ASME SI-1 82 0759670 0083943 3

ASME GUIDE SI-1

ASME Orientation and Guide for Use of SI (Metric) Units

NINTH EDITION

THE AMERICAN SOCIETY OF MECHANICAL ENGINEERS
United Engineering Center 345 East 47th Street New York, N. Y. 10017

Copyright ASME International
Provided by IHS under license with ASME
No reproduction or networking permitted without license from IHS Not for Resale

ASME SI-1 82 ■ 0759670 0083944 5 ■

ASME GUIDE SI-1

ASME Orientation and Guide for Use of SI (Metric) Units

NINTH EDITION

March 24, 1982

THE AMERICAN SOCIETY OF MECHANICAL ENGINEERS

United Engineering Center 345 East 47th Street New York, N.Y. 10017

Copyright ASME International
Provided by IHS under license with ASME
No reproduction or networking permitted without license from IHS Not for Resale

No part of this document may be reproduced in any form,
in an electronic retrieval system or otherwise,
without the prior written permission of the publisher

Copyright © 1982
THE AMERICAN SOCIETY OF MECHANICAL ENGINEERS
All Rights Reserved
Printed in U.S.A.

Copyright ASME International
Provided by IHS under license with ASME
No reproduction or networking permitted without license from IHS
Not for Resale

BOARD ON METRICATION

J. G. Langenstein, *Chairman*
Kurt Wessely, *Secretary*

W. P. Adkins
J. T. Blackburn, Jr.
J. S. Castorina
O. J. Fisher
W. P. Gobell, Jr.
F. T. Gutmann
Carl Handen
F. R. Jackson
R. G. Jobe
J. G. Langenstein
Samuel Leland
J. B. Levy
R. J. Mann
W. G. McLean
J. W. Murdock
D. H. Pai
J. J. Pohl, Jr.
P. C. Quo
K. J. Simila
C. E. Smith
A. M. Smolen
D. H. White
C. J. Wilson
B. D. Ziels

Copyright ASME International
Provided by IHS under license with ASME
No reproduction or networking permitted without license from IHS
Not for Resale

Contents

SECTIONS

1. Background and Policy 1
2. History of the International System 3
3. SI Base Units 4
4. Supplementary Units 5
5. Prefixes 5
6. The Coherence of Derived Units in SI 7
7. Rules for Use of SI Units in ASME Publications 9
8. Conversion and Rounding 10
9. Dimensioning 16
10. Units Outside the International System 17
11. Units Accepted Temporarily 18
12. Units Not to be Used in ASME Documents. 19
13. SI Units for ASME Use 21
14. Introducing SI Units in ASME Publications 23
15. Introducing SI Units in Tables 24
16. Methods of Reporting SI Equivalents for Existing Standards Under Revision 24

TABLES

1. SI Base Units 5
2. SI Unit Prefixes. 6
3. Derived Units With Names. 9
4. Some Derived Units Without Names 9
5. Units in Use With the International System 18
6. Units Used With the International System in Specialized Fields 18
7. Units To Be Used With the International System for a Limited Time . 19
8. CGS Units with Special Names. 20
9. Other Units 20
10. List of SI Units for ASME Use 21

APPENDICES

Appendix 1 25
Appendix 2 26
Appendix 3 28
Appendix 4 29
Appendix 5 30
Appendix 6 31
Appendix 7 32
Appendix 8 33
Appendix 9 34
Appendix 10 36

Copyright ASME International
Provided by IHS under license with ASME
No reproduction or networking permitted without license from IHS
Not for Resale

ASME SI-1 82 ■ 0759670 0083948 2 ■

ASME Orientation and Guide for Use of SI (Metric) Units

Ninth Edition
March 24, 1982

SECTION 1. BACKGROUND AND POLICY

The 1967 Regional Administrative Conference passed the following resolution: "Form a working committee to propose and implement constructive solutions to problems associated with conversion to the metric system."

In 1968 a Special Committee on Metric Study was established by the Council of ASME. This committee has held a series of meetings which culminated in the following Council policy:

1. 1970—The ASME anticipates the displacement of the usage of U.S. customary units by the usage of SI* (metric) units in many fields.
2. 1970—The ASME believes that both U.S. customary and the SI systems of units, modules, sizes, ratings, etc., will continue in use in the foreseeable future.
3. 1970—Because of the increasing international commitment of U.S. engineering and U.S. industry and commerce, the ASME recognizes the need for an accelerated growth in the capability in and between both systems by the mechanical engineering profession.
4. 1970—The ASME will encourage and assist the development of this "dual capability" by specific and positive actions, including the following:
   (a) Contribute to the continuing development of the International System, particularly to meet engineering requirements.
   (b) Develop and disseminate data to facilitate conversion and insure correspondence between the U.S. customary and SI.
   (c) Provide and promote education in the fundamentals and application of both systems.

*International System

Copyright ASME International
Provided by IHS under license with ASME
No reproduction or networking permitted without license from IHS
Not for Resale

(d) Encourage and guide the use or inclusion of SI units as appropriate in Codes and Standards and other ASME publications.

(e) Work with ANSI to develop and implement U.S. national policies regarding international standardization.

5. 1970—The ASME will continue to support the National Bureau of Standards of the Department of Commerce in its "Metric Study," pursuant to Public Law 90-472. Its membership will be kept informed of all significant NBS actions.
6. 1972—For the purpose of moving forward the ASME will maintain close liaison with legislative activities concerned with increased use of the International Metric System (SI).
7. 1973—The Society encourages the initiation of a coordinating voluntary national program of conversion to SI usage.
8. 1973—As of July 1, 1974, SI units (in addition to any other units) will be required in ASME papers and in revised, reaffirmed and new engineering standards.
9. 1974—The ASME will cooperate fully with the American National Metric Council (ANMC), and other societies and agencies to minimize duplication of effort.
10. 1977—SI units shall be included in standards at the appropriate time as determined by industry, government, public and society needs consistent with national plans for coordinating and managing development of SI standards.

The ASME Metric Study Committee maintains contact with the National Bureau of Standards and various technical societies involved in the change to SI and has developed educational material and reports to the membership. The committee also developed society positions on metric legislation. The U.S. Metric Study Report was submitted to Congress for study and implementation in July, 1971. This report recognized that "engineering standards have served as a keystone in our domestic industrial development, as they have in other industrialized nations." It notes that only a small portion of U.S. standards are coordinated by the American National Standards Institute (ANSI) which represents the U.S. on the International Electrotechnical Commission (IEC) and in the International Organization for Standards (ISO). Many IEC and ISO recommendations are not compatible with U.S. Standards. The report further states: "If U.S. practices are to be reflected in international recommendations, active participation on the drafting committee is essential." With the trend to use the International System of Units "further national standards which do not include SI units are not likely to receive due consideration in the development of international standards."

Since dimensional specifications in different metric countries are incompatible as frequently as those in countries using the inch unit for measurement "a change to SI does not by itself make standards compatible." The report continues, "a few dimensional specifications based on the inch and U.S.

Copyright ASME International
Provided by IHS under license with ASME
No reproduction or networking permitted without license from IHS Not for Resale

engineering practices are used internationally and have been incorporated in IEC and ISO recommendations. Likewise, there are a few specifications based on metric units used throughout the world including the U.S." The report states that a change in both metric and nonmetric countries is required to achieve international standardization. A review of practices incorporated in standards could result in new practices and standards "which will conserve raw materials, improve the quality of products and reduce costs."

ASME is a charter subscriber to the American National Metric Council and several members of the ASME Metric Study Committee serve or have served on the ANMC Board of Directors, Metric Practice Committee, and sector committees.

SECTION 2. HISTORY OF THE INTERNATIONAL SYSTEM

As our technology grew in the nineteenth century, it became apparent there was a great need for international standardization and improvements in the accuracy of standards for units of length and mass. As a result, in 1872 an international meeting was held in France and was attended by representatives of 26 countries including the United States. Out of this meeting came the international treaty, the Metric Convention, which was signed by 17 countries including the United States in 1875. The treaty:

(a) Set up metric standards for length and mass.

(b) Established the International Bureau of Weights and Measures (abbreviated from the French as BIPM:—PM for French "Poids et mesures" meaning "weights and measures").

(c) Established the General Conference of Weights and Measures (CGPM) which meets every six years.

(d) Set up an International Committee of Weights and Measures (CIPM) which meets every two years and which implements the recommendations of the General Conference and directs the activities of the International Bureau. The 1960 meeting of CGPM consisting then of 40 members, modernized the metric system. This revision is the International System of Units (SI)*. The expression used hereafter "SI Units," "SI Prefixes" and "supplementary units" are the results of Recommendation 1 (1960) of the CIPM. The sixth base unit listed in Table 1 was proposed as a Resolution by CIPM in 1969 and was adopted by the 14th CGPM in 1971.

*"Le Système International d'Unités," 1970, OFFILIB, 48 rue Gay-Lussac, F. 75 Paris 5 (revised edition 1972).

Copyright ASME International
Provided by IHS under license with ASME
No reproduction or networking permitted without license from IHS
Not for Resale

SECTION 3. SI BASE UNITS

The following are definitions of the seven base units:

(a) The "meter"* is the unit of length which is the length equal to 1 650 763.73 wavelengths in vacuum of the radiation corresponding to the transition between levels $2p_{10}$ and $5d_5$ of the krypton-86 atom. (In conformance with SI practice the number of wavelengths is written in groups of three digits *without* commas.)

(b) The "kilogram" is the unit of mass which is equal to mass of the international prototype kilogram, located at the BIPM headquarters.

(c) The "second" is the unit of time which is the duration of 9 192 631 770 periods of the radiation corresponding to the transition between the two hyperfine levels of the ground state of the cesium-133 atom.

(d) The "ampere" is the unit of electric current which is that constant current which, if maintained in two straight parallel conductors of infinite length, of negligible circular cross section, and placed 1 meter apart in vacuum, would produce between these conductors a force equal to 2×10^{-7} newton per meter of length (newton is a derived unit).

(e) The "kelvin" is the unit of thermodynamic temperature which is the fraction 1/273.16 of the thermodynamic temperature of the triple point of water. The SI unit of temperature is the kelvin. The Celsius temperature (previously called Centigrade) is the commonly used scale for temperature measurements, except for some scientific work where the thermodynamic scale is used. A difference of one degree on the Celsius scale equals one kelvin. Zero on the thermodynamic scale is 273.15 kelvins below zero degree Celsius. The degree symbol is associated with Celsius temperature (to avoid confusion with the unit C for coulomb) but not with the kelvin. Thus 20°C = 293.15 K on the thermodynamic scale but a temperature difference of 1°C = 1 K. (See Appendix 9.)

(f) The "mole" is the unit of amount of substance of a system which contains as many elementary entities as there are atoms in 0.012 kilogram of carbon 12.

(g) The "candela" is the unit of luminous intensity in the perpendicular direction, of a surface of 1/600 000 square meter of a blackbody at the temperature of freezing platinum under a pressure 101 325 newtons per square meter.

The symbols for these base units are given in Table 1. *Note* that symbols are never pluralized, are never written with a period, and the practice with

*Meter—This is the spelling recommended by the ASME Metric Study Committee for use in ASME publications. The alternate spelling, "metre," may be used at the discretion of the author.

Copyright ASME International
Provided by IHS under license with ASME
No reproduction or networking permitted without license from IHS
Not for Resale

respect to upper and lower case modes must be followed without exception.

Refer to ANSI X3.50 or ISO 2955 for proper symbols for use in limited character sets (availability of only upper case letters or only lower case letters).

TABLE 1–SI BASE UNITS[1]

Quantity	Unit Name	Unit Symbol*
Length	meter	m
Mass	kilogram**	kg
Time	second	s
Electric current	ampere	A
Thermodynamic temperature	kelvin	K
Amount of substance	mole	mol
Luminous intensity	candela	cd

[1] Special Publication 330, p. 6, National Bureau of Standards. (See Appendix 8.)
*In general, roman (upright type) lower case is used for symbols of units; however, if the symbols are derived from proper names, capital roman type is used for the first letter.
**The kilogram is the only base unit with a prefix.

SECTION 4. SUPPLEMENTARY UNITS

The General Conference has not yet classified certain units of the International System under either base units or derived units. These SI units are assigned to the third class called "supplementary units" and may be regarded either as base units or as derived units.

The two supplementary units are the radian for plane angle (symbol rad) and the steradian for solid angle (symbol sr).

SECTION 5. PREFIXES

Decimal multiples and submultiples of the SI units are formed by means of the prefixes detailed in Table 2 on next page. Only one multiplying prefix is applied at one time to a given unit, e.g., nanometer (nm), not millimicrometer (mμm).

Copyright ASME International
Provided by IHS under license with ASME
No reproduction or networking permitted without license from IHS
Not for Resale

TABLE 2–SI UNIT PREFIXES

Amount	Multiples and Submultiples	Prefixes	Symbols	Pronounciations	Means
1 000 000 000 000 000 000	10^{18}	exa	E	ex'a	One quintillion times
1 000 000 000 000 000	10^{15}	peta	P	pet'a	One quadrillion times
1 000 000 000 000	10^{12}	tera	T	tĕr'ă	One trillion times
1 000 000 000	10^{9}	giga	G	jĭ'ga	One billion times
1 000 000	10^{6}	mega	M*	mĕg'a	One million times
1 000	10^{3}	kilo	k*	kil'o	One thousand times
100	10^{2}	hecto	h	hĕk'tō	One hundred times
10	10	deka	da	dĕk'a	Ten times
0.1	10^{-1}	deci	d	dĕs'ĭ	One tenth of
0.01	10^{-2}	centi	c	sĕn'tĭ	One hundredth of
0.001	10^{-3}	milli	m*	mĭl'ĭ	One thousandth of
0.000 001	10^{-6}	micro	μ*	mī'krō	One millionth of
0.000 000 001	10^{-9}	nano	n	năn'ō	One billionth of
0.000 000 000 001	10^{-12}	pico	p	pē'cō	One trillionth of
0.000 000 000 000 001	10^{-15}	femto	f	fĕm'tō	One quadrillionth of
0.000 000 000 000 000 001	10^{-18}	atto	a	ăt'tō	One quintillionth of

*Most commonly used.

ASME SI-1 82 ■ 0759670 0083953 6 ■

Copyright ASME International
Provided by IHS under license with ASME
No reproduction or networking permitted without license from IHS
Not for Resale

The symbol of a prefix is considered to be combined with the unit symbol to which it is directly attached, forming with it a new unit symbol which can be raised to a positive or negative power and which can be combined with other unit symbols to form symbols for compound units.

Examples:

$1\ mm^3 = (10^{-3}\ m)^3 = 10^{-9}\ m^3$

$1\ ns^{-1} = (10^{-9}\ s)^{-1} = 10^{9}\ s^{-1}$

$1\ mm^2/s = (10^{-3}\ m)^2/s = 10^{-6}\ m^2/s$

When expressing a quantity by a numerical value and a specific unit, it is desirable in most applications to select a multiple or submultiple of the unit which results in a numerical value between 0.1 and 1000.

It is desirable, however, to carry the multiples and sub-multiples to greater or smaller numerical values where the predominant usage is dictated by this rule, e.g., mechanical design uses: mm.

Example:

7950 mm instead of 7.950 m

Note: In text and tables, if a numerical value is less than one, a zero shall precede the decimal point.

The use of prefixes representing 10 raised to a power which is a multiple of 3 is especially recommended in ISO 1000.* The use of prefixes in the denominator of derived units should be avoided.

SECTION 6. THE COHERENCE OF DERIVED UNITS IN SI

SI comprises the seven base units listed in Table 1, the two supplementary units radian and steradian, and any number of units derived from the base units, supplementary units, or other derived units. Certain derived units have special names. See Table 3.

It is a fundamental and convenient feature of SI that the base units, supplementary units and derived units form a coherent system. Derived units are algebraic expressions in terms of powers of the base units, and all numerical factors are unity. In the inch-pound system, by contrast, a great many numerical factors come into play when units are derived from each other, or even when they are compared with one another. The difference between coherence and lack of coherence can be shown by comparing the units of power in the two systems.

*See Appendix 8.

Copyright ASME International
Provided by IHS under license with ASME
No reproduction or networking permitted without license from IHS Not for Resale

In SI, the unit of power may be derived in three steps as follows:

$$\text{force} = \text{mass} \times \text{acceleration} = \text{kg} \cdot \text{m} \cdot \text{s}^{-2}$$

$$\text{work} = \text{force} \times \text{distance} = (\text{kg} \cdot \text{m} \cdot \text{s}^{-2}) \times \text{m} = \text{kg} \cdot \text{m}^2 \cdot \text{s}^{-2}$$

$$\text{power} = \text{work per unit of time} = (\text{kg} \cdot \text{m}^2 \cdot \text{s}^{-2}) \times \text{s}^{-1} = \text{kg} \cdot \text{m}^2 \cdot \text{s}^{-3}$$

This derivation applies to mechanical and electrical as well as thermal power. The unit of power is the watt. In most applications, power output or input will be expressed in kilowatts or megawatts.

In the customary system, mechanical power is measured in horsepower, thermal power in British Thermal Units, and electrical power in kilowatts. These units are related to each other by the following:

$$1 \text{ hp} = \frac{33\,000 \text{ ft-lb}}{\text{min}} = \frac{500 \text{ ft-lb}}{\text{sec}} = \frac{2545 \text{ Btu}}{\text{hr}} = \frac{42.42 \text{ Btu}}{\text{min}} = 746 \text{ watts}$$

Note the lack of consistency in the unit of time and the many numerical factors. The unit for electrical power is the same in the inch-pound system and in SI. The numerical relationships incorporate well-known empirical factors.

Table 3 shows SI derived units with their names, symbols, and formulas, and for each derived unit an expression in terms of base and supplementary units. Note that every unit name is spelled with a lower case first letter; upper case is to be used only at the beginning of a sentence. The rule for capitalization of unit symbols is as follows: if a unit is named for a person, the first letter of the symbol is capitalized, as in V for volt or Hz for hertz; otherwise the unit symbol is in lower case, as in lm for lumen or lx for lux. The exception is the symbol L for liter. This rule applies to all SI units.

Copyright ASME International
Provided by IHS under license with ASME
No reproduction or networking permitted without license from IHS Not for Resale

TABLE 3–DERIVED UNITS WITH NAMES

Quantity	Name	Symbol	Formula	Expression in Terms of SI Base Units
Frequency	hertz	Hz	1/s or s^{-1}	s^{-1}
Force	newton	N	$m \cdot kg \cdot s^{-2}$	$m \cdot kg \cdot s^{-2}$
Energy, work	joule	J	N·m	$m^2 \cdot kg \cdot s^{-2}$
Power	watt	W	J/s	$m^2 \cdot kg \cdot s^{-3}$
Electric charge	coulomb	C	A·s	A·s
Electric potential	volt	V	W/A	$m^2 \cdot kg \cdot s^{-3} \cdot A^{-1}$
Electric resistance	ohm	Ω	V/A	$m^2 \cdot kg \cdot s^{-3} \cdot A^{-2}$
Electric capacitance	farad	F	C/V	$m^{-2} \cdot kg^{-1} \cdot s^4 \cdot A^2$
Magnetic flux	weber	Wb	V·s	$m^2 \cdot kg \cdot s^{-2} \cdot A^{-1}$
Pressure or stress*	pascal	Pa	N/m^2	$m^{-1} \cdot kg \cdot s^{-2}$
Conductance	siemens	S	A/V	$m^{-2} \cdot kg^{-1} \cdot s^3 \cdot A^2$
Magnetic flux density	tesla	T	Wb/m^2	$kg \cdot s^{-2} \cdot A^{-1}$
Inductance	henry	H	Wb/A	$m^2 \cdot kg \cdot s^{-2} \cdot A^{-2}$
Luminous flux	lumen	lm	cd·sr	cd·sr
Illuminance	lux	lx	lm/m^2	$m^{-2} \cdot cd \cdot sr$

*In cases where space does not permit writing out "gage pressure" or "absolute pressure," such as in equations, on data table column headings or on instrument faces, recommended practice is to use the unit symbol followed by a space, then the qualifying adjective or abbreviation in parentheses. For example: kPa (ga) and kPa (abs) are correct expressions.

Table 4 lists some derived units without names. Units not shown should be derived from approved units; e.g., the proper units for mass per unit time is kg/s.

TABLE 4–SOME DERIVED UNITS WITHOUT NAMES

Quantity	Unit	Formula
Velocity-linear	meter per second	m/s
Acceleration-linear	meter per second per second	m/s^2
Density	kilogram per cubic meter	kg/m^3
Entropy	joule per kelvin	J/K
Thermal flux density	watt per square meter	W/m^2

SECTION 7. RULES FOR USE OF SI UNITS IN ASME PUBLICATIONS

The kilogram is the unit of mass. The newton is the unit of force and shall be used rather than kilogram-force (which is a non-SI unit). In SI, the difference between mass and force is very clear. The term *weight* has been used by

Copyright ASME International
Provided by IHS under license with ASME
No reproduction or networking permitted without license from IHS
Not for Resale

engineers and scientists to denote the force of local gravity. Although this has been the meaning accepted for scientific use, the term is also widely used to denote other closely-related forces and to denote mass.

This fact is intertwined with the past use of the same names as units of both force and mass (e.g., lbf and lbm, and kgf and kg).

Both ambiguities lead to communication difficulties. Therefore, the use of the term *weight* is discouraged in ASME technical communications.

Either "force of gravity on" or "gravity force on" will be far less likely to be misinterpreted than "weight of".

Length measurements in technical papers and publications should be expressed in millimeters or meters. Centimeters should be avoided. Other units which may be used with SI units are given in Sections 10 and 11.

ASME requirements establish the use of SI units in the following manner—either:

As the preferred units with other units in parentheses:	In parentheses following quantities in other units:
60.0 mm (2.36 in.)	2.45 in (62.2 mm)
170 kPa (24.7 psi)	25 psi (172 kPa)
1.60 MJ (1500 Btu)	1500 Btu (1.6 MJ)
600 N (61 kgf)	60 kgf (590 N)

or:

As the only unit without customary unit equivalents:

104.5 J
24.5 MN

When nominal sizes that are not measurements but are names of items are used, no conversion should be made, e.g., ¼–20 UNC thread, 2 X 4 lumber.

Requirements for tabular data are presented in the appendices.

SECTION 8. CONVERSION AND ROUNDING

Conversion of quantities between systems of units requires careful determination of the number of significant digits to be retained. To convert "one quart of oil" to "0.946 352 9 liter of oil" is, of course, nonsense because the intended accuracy of the values does not warrant a conversion to seven decimal places. All conversions, to be logical, must be rounded based on the precision of the original quantity, either expressed by a tolerance or implied by the nature of the quantity.

Where a value represents a maximum or minimum limit that must be respected, the rounding must be in the direction that does not violate the original limit.

The ultimate test of a correct conversion is fidelity to the intended form, fit, function, and interchangeability. It is not an automatic process, but requires sound engineering judgment. One or more initial zeroes are not called

Copyright ASME International
Provided by IHS under license with ASME
No reproduction or networking permitted without license from IHS Not for Resale

"significant". Zeroes at the end of a number are considered significant only when they represent the true value more closely than one more or one less.

In any conversion take the following steps:

1. Convert the values and tolerance, if there is one, by multiplying by the appropriate conversion factor.
2. Choose the number of significant digits to be retained in the converted value. See rounding practices in par. 8.1 and 8.2.
3. Round off the converted value to the desired number of significant digits using the rules in the following table which apply to all the rounding practices in par. 8.1 and 8.2, except par. 8.2.1.

When the First Digit Dropped Is:	The Last Digit Retained Is:
Less than 5	Unchanged
More than 5 or 5 followed by other than all zeros	Increased by 1
5 followed only by zeros	Unchanged if even Increased by 1 if odd

8.1 Rounding of General Technical Data

The following chart based on the first significant digits of the conversion factor and a comparison of the original and converted values can be used to determine the number of significant digits to be retained in converted values other than drawing dimensions and temperatures.

As an example, conversion of 34 feet to meters is as follows:

(a) From Appendix 9 the conversion factor is 0.3048 m/ft. The converted value is 10.3632 m.

(b) The first significant digit of the conversion factor is "3" which is between 1 and 5. Therefore, the top half of the chart is used.

(c) Compare the first significant digits of the original value and the converted value. The "1" in 10.3632 m is less than the "3" in 34 feet. Therefore the converted value should be rounded to one more significant digit than the original value; thus 34 feet becomes 10.4 meters.

Copyright ASME International
Provided by IHS under license with ASME
No reproduction or networking permitted without license from IHS Not for Resale

1st Significant Digit of Conversion Factor	1st Significant Digit of Converted Value	Round to	Example
1 - 5	⩾ 1st significant digit of orig. value	same no. significant digits	31 ft X 0.3048 m/ft = 9.4488 m which rounds to 9.4
	< 1st significant digit of orig. value	one more significant digit	34 ft X 0.3048 m/ft = 10.3632 m which rounds to 10.4
6 - 9	⩽ 1st significant digit of orig. value	same no. significant digits	25 psi X 6.895 kPa/psi = 172.375 kPa which rounds to 170 (The final 0 is not a significant digit but is required to give correct magnitude)
	> 1st significant digit of orig. value	one less significant digit	10.5 yd X 0.9144 m/yd = 9.6102 m which rounds to 9.6 m

8.1.1 Rounding of Temperatures

Temperatures can be rounded to the nearest whole degree or a multiple of whole degrees.

8.2 Rounding of Toleranced Values

There are several methods used to determine the number of significant digits to be retained in converted values. Following are three common practices.

8.2.1 Rounding Inward

This practice rounds the converted values to within the range of the original dimension and tolerance. For example, 0.880 ± 0.003 inch is 0.877 to 0.883 inch which equals 22.2758 to 22.4282 millimeters. Two decimal places in millimeters could be considered comparable to three decimal places in inches when considering the accuracy required and the measuring equipment that would be used in machining or inspecting this dimension. The 22.2758 to 22.4282 range would therefore round to 22.28 to 22.42. Note that the lower limit is rounded up and the upper limit is rounded down.

Copyright ASME International
Provided by IHS under license with ASME
No reproduction or networking permitted without license from IHS Not for Resale

The advantage of this practice is that absolutely every part meeting the converted dimension and tolerance would also meet the inch dimension and tolerance. The disadvantage to this practice is that tolerance is always decreased. In this example the tolerance reduction is 0.0124 mm (0.00049 inch), approximately 8%.

8.2.2 Rounding Based on Decimal Places

This practice assumes that the number of decimal places reflects the intended precision. Millimeter dimensions are then rounded to one less place than the inch dimension and tolerance, but no less than a certain number of decimal places – generally two decimal places. In this case 0.880 ± 0.003 inch equals 22.3520 ± 0.0762 mm, which would be 22.35 ± 0.08 mm. The increase in tolerance is ± 0.0038 or a total of 0.0076 mm (0.0003 inch), or approx. 5%. 0.75 ± 0.01 inch equals 19.050 ± 0.254 mm which would be 19.05 ± 0.25 mm, a decrease in total tolerance of 0.008 mm (0.00031 inch).

The practice of basing the number of decimal places in the converted value on the number of decimal places in the original dimension presumes that the number of decimal places in the original dimension reflects the intended precision. This practice may be most suitable for conversion of millimeters to inches where the designer is aware that the dimensions are to be converted.

When converting millimeters to inches, inches would be expressed to one more decimal place than the millimeter dimension. Thus, when expressing the width of a bracket, 150 mm could be shown and the conversion to 5.9 inches would be satisfactory. However, when showing the internal diameter of a ball bearing, 150.000 mm would be required to get a conversion to 5.9055 inches.

8.2.3 Rounding Based on Total Tolerance

Using another practice, the number of decimal places is determined by the size of the total tolerance applied to the dimension. The following chart may be used:

Total Tolerance In Inches		Converted Value In Millimeters Shall be Rounded To
At Least	Less Than	
0.000 04	0.0004	4 places (0.0001)
0.000 4	0.004	3 places (0.001)
0.004	0.04	2 places (0.01)
0.04	–	1 place (0.1)

0.880 ± 0.003 inch equals 22.3520 ± 0.0762 mm. The total tolerance is 0.006 inch which is between 0.004 and 0.04 inch. Thus the dimension and tolerance would be rounded to 2 decimal places, 22.35 ± 0.08 mm.

Copyright ASME International
Provided by IHS under license with ASME
No reproduction or networking permitted without license from IHS Not for Resale

8.3 Numerical Values in Formulas

Formulas which use letter symbols to represent physical quantities should be valid with any units used. However, in practice, formulas may have coefficients which contain unit conversion factors as well as empirical or other factors. Such formulas are tailored for use with specific units, and the engineer may wish to "convert" them so that a specific set of SI units can be used directly. It is essential that any "unit-tailored" formula be accompanied by clear directions for correct units to be used.

8.3.1 describes a recommended method of handling units. 8.3.2 describes a method of converting formulas which contain coefficients or empirical factors which depend on the units used.

8.3.1 If a formula is in unit-independent form, units can be most simply determined as numerical values are substituted.

Example: The power which can be safely transmitted by a rotating, round shaft is given by

$$P = \frac{\pi}{16} \tau D^3 \omega$$

in which

τ is the allowable shear stress
D is the diameter of the shaft
ω is the angular speed of the shaft

For the values

$$\tau = 6000 \text{ lbf/in}^2 = 41.4 \text{ MPa} = 41.4 \times 10^6 \text{ N/m}^2$$
$$D = 1.00 \text{ in} = 0.0254 \text{ m}$$
$$\omega = 1000 \text{ rev/min} = 104.7 \text{ rad/s}$$

the substitution is carried out as follows:

$$P = \frac{\pi \ (6000 \text{ lbf/in}^2)\,(1.00 \text{ in})^3\ (1000 \text{ rev/min})\ (2\pi \text{ rad/rev})}{16 \qquad (12 \text{ in/ft})\ (33\,000 \text{ ft} \cdot \text{lbf/min} \cdot \text{HP})} = 18.7 \text{ HP}$$

or,

$$P = \frac{\pi}{16}(41.4 \times 10^6 \text{ N/m}^2)\,(0.0254 \text{ m})^3\ (104.7 \text{ rad/s})$$
$$= 13\,900 \text{ N} \cdot \text{m/s}$$
$$= 13.9 \text{ kW}$$

The results agree since $18.7 \text{ HP}\left(\frac{0.7457 \text{ kW}}{\text{HP}}\right) = 13.9 \text{ kW}$, properly rounded.

A check of the units should be made by algebraic "cancelling" prior to carrying out of the multiplication and/or division.

If the formula is to be used repeatedly to give horsepower in terms of diameter in inches and angular speed in rev/min, with a shear stress of 6000

Copyright ASME International
Provided by IHS under license with ASME
No reproduction or networking permitted without license from IHS Not for Resale

psi, it may be "unit-tailored" by incorporating the appropriate conversion factors with the $\pi/16$ and 6000 psi as follows:

$$P = \frac{\pi \ (6000 \text{ lbf/in}^2)\ (2\pi \text{ rad/rev})\ D^3\ \omega}{16\ (12 \text{ in/ft})\ (33\,000 \text{ ft} \cdot \text{lbf/min} \cdot \text{HP})}$$

$$= \frac{D^3\ \omega}{53.5 \text{ in}^3 \cdot \text{rpm/HP}}$$

It is sound practice to write the units of the factor 53.5; thus when values such as D = 1.00 in and ω = 1000 rpm are substituted,

$$P = \frac{(1.00 \text{ in})^3\ (1000 \text{ rpm})}{53.5 \text{ in}^3 \cdot \text{rpm/HP}} = 18.7 \text{ HP}$$

all units except HP cancel properly upon multiplication and division.

8.3.2 A formula may have the general form

$$A = K \frac{B^m}{C^n} \qquad \text{Eq. 1}$$

where K is a constant which may contain a unit conversion factor as well as other factors, and A, B, and C represent variables measured in U.S. customary units. If the conversion factors for these variables are a, b, c, then K_{SI} (the corresponding factor for the converted formula) can be obtained from

$$\frac{A}{a} = K \frac{\left(\frac{B}{b}\right)^m}{\left(\frac{C}{c}\right)^n} \qquad \text{Eq. 2}$$

Example: The power which can be safely transmitted by a rotating, round shaft is given as

$$P(\text{HP}) = \frac{D^3 \text{ (in)}\ N \text{ (rpm)}}{53.5 \text{ in}^3 \cdot \text{rpm/HP}}$$

where the following units will be used in the conversion of the formula:

	customary	SI
P	HP	kW
D	in	mm
N	rpm	rad/s

Copyright ASME International
Provided by IHS under license with ASME
No reproduction or networking permitted without license from IHS
Not for Resale

Applying the form of Eq. 2 to Eq. 1

$$\frac{P}{p} = \frac{1}{53.5}\left(\frac{D}{d}\right)^3 \left(\frac{N}{n}\right)$$

where $p = \frac{0.7457 \text{ kW}}{\text{HP}}$

$$d = \frac{25.4 \text{ mm}}{\text{in}}$$

$$n = \frac{\pi \text{ rad/s}}{30 \text{ r/min}} = 0.1047 \frac{\text{rad/s}}{\text{r/min}}$$

so that

$$K_{SI} = (0.7457)\left(\frac{1}{53.5}\right)\left(\frac{1}{25.4}\right)^3 \left(\frac{1}{0.1047}\right)$$

$$= 8.12 \times 10^{-6}$$

to prove, calculate in both systems:

$D = 1$ in	$D = 25.4$ mm
$n = 1000$ rpm	$n = 104.7$ rad/s

In customary system:

$$P = \frac{(1.00 \text{ in})^3 \ (1000 \text{ rpm})}{53.5 \text{ in}^3 \cdot \text{rpm/HP}} = 18.7 \text{ HP}$$

In SI:

$$P = [8.12 \times 10^{-6} \text{ kW/(mm}^3 \cdot \text{rad/s)}] \ (25.4 \text{ mm})^3 \ (104.7 \text{ rad/s}) = 13.9 \text{ kW}$$

Proof:

$$(18.7 \text{ HP}) \ (0.7457 \text{ kW/HP}) = 13.9 \text{ kW}$$

SECTION 9. DIMENSIONING

There are strict rules about dimensioning but fortunately they are very simple.

1. In general, product engineering drawings are dimensioned in millimeters or decimal parts of a millimeter except for surface roughness which is expressed in micrometers.

Copyright ASME International
Provided by IHS under license with ASME
No reproduction or networking permitted without license from IHS Not for Resale

2. On drawings where very large items are depicted such as construction and architectural, dimension in meters and decimal parts of a meter using three or more decimal places, e.g., 32 meters 40 millimeters would be 32.040 m or 32.040 (see rule 3).
3. If the drawing is dimensioned "all in millimeters or meters," this should be indicated in note form applicable to all references.
4. *Do not use centimeters on drawings.*
5. The size of a millimeter should be kept in mind.
   1 mm = 1/25.4 in ≃ 0.039 370 in, about 40-thousandths.
   0.1 mm ≃ 0.004 in
   0.01 mm ≃ 0.0004 in

Dimensioning to more than *two* decimal places in millimeters will be an uncommon occurrence.

6. Always leave a space between the number and symbol:
   1.71 mm not 1.71mm.
7. When using five or more figures in tables and text, space these as 10 000 or 100 000. Do not use commas. The space should also be used with quantities of four figures when columnized with quantities having five or more.
8. Dimensional practice for drawings is governed by ANSI Y14.5, Dimensioning and Tolerancing, published by ASME.*
9. The use of tables is recommended where conversion of drawings is necessary, with dimensions arranged in ascending order of magnitude and other parameters listed in the same manner but in separate columns. These tables may be placed on separate sheets and may be generated as computer printouts.

SECTION 10. UNITS OUTSIDE THE INTERNATIONAL SYSTEM

Units Used with the International System

Certain units which are not part of SI are in widespread use. These units play such an important part that they must be retained for general use with the International System of Units. They are given in Table 5. It should be recognized that these units need not be supplemented by the equivalent SI units unless desired for clarity.

*See Appendix 8.

Copyright ASME International
Provided by IHS under license with ASME
No reproduction or networking permitted without license from IHS
Not for Resale

TABLE 5—UNITS IN USE WITH THE INTERNATIONAL SYSTEM

Name	Symbol	Value in SI Unit
minute	min	1 min = 60 s
hour	h	1 h = 60 min = 3 600 s
day	d	1 d = 24 h = 86 400 s
degree	°	$1° = (\pi/180)$ rad
minute	′	$1′ = (1/60)° = (\pi/10\,800)$ rad
second	″	$1″ = (1/60)′ = (\pi/648\,000)$ rad
liter	L*	1 L = 1 dm^3 = 10^{-3} m^3
metric ton	t	1 t = 10^3 kg = 1 Mg

*Liter—This is the spelling recommended by the ASME Metric Study Committee for use in ASME publication. The alternate spelling, "Litre," may be used at the discretion of the author.

The international symbol for liter is the lower case "l", which can easily be confused with the numeral "1". Accordingly, the symbol "L" is recommended for United States use.

It is likewise necessary to recognize, outside the International System, some other units which are useful in specialized fields of scientific research, because their values expressed in SI units must be obtained by experiment, and are therefore not known exactly (Table 6).

TABLE 6—UNITS USED WITH THE INTERNATIONAL SYSTEM IN SPECIALIZED FIELDS[2]

Name	Symbol	Magnitude
electronvolt	eV	$1.602\,19 \times 10^{-19}$ J
unified atomic mass unit	u	$1.660\,53 \times 10^{-27}$ kg
astronomical unit	AU	$149\,600 \times 10^{6}$ m
parsec	pc	$30\,857 \times 10^{12}$ m

[2] Special Publication 330, p. 14 National Bureau of Standards. (See Appendix 8.)

SECTION 11. UNITS ACCEPTED TEMPORARILY

In view of existing practice, the CIPM (1969) considered it was preferable to keep for the time being, for use with those of the International System, the units listed in Table 7.

Copyright ASME International
Provided by IHS under license with ASME
No reproduction or networking permitted without license from IHS Not for Resale

TABLE 7—UNITS TO BE USED WITH THE INTERNATIONAL SYSTEM FOR A LIMITED TIME

Name	Symbol	Value in SI Units
nautical mile		1 nautical mile = 1852 m
knot		1 nautical mile per hour = (1852/3600)m/s
ångstrom	Å	1 Å = 0.1 nm = 10^{-10} m
are	a	1 a = 1 dam^2 = 10^2 m^2
hectare	ha	1 ha = 1 hm^2 = 10^4 m^2
barn(a)	b	1 b = 100 fm^2 = $10^2 \times 10^{-30}$ m^2 = 10^{-28} m^2
standard atmosphere	atm	1 atm = 101 325 Pa
gal(b)	Gal	1 Gal = 1 cm/s^2 = 10^{-2} m/s^2
curie(c)	Ci	1 Ci = 3.7×10^{10} s^{-1}
röntgen(d)	R	1 R = 2.58×10^{-4} C/kg
rad(e)	rad	1 rad = 10^{-2} J/kg
bar	bar	1 bar = 0.1 MPa = 10^5 Pa

(a) The barn is a special unit employed in nuclear physics to express effective cross sections.
(b) The gal is a special unit employed in geodesy and geophysics to express the acceleration due to gravity.
(c) The curie is a special unit employed in nuclear physics to express activity of radionuclides [12th CGPM (1964) Resolution 7].
(d) The röntgen is a special unit employed to express exposure of X or γ radiations.
(e) The rad is a special unit employed to express absorbed dose of ionizing radiations. When there is risk of confusion with the symbol for radian, rd may be used as symbol for rad.

SECTION 12. UNITS NOT TO BE USED IN ASME DOCUMENTS

12.1 CGS Units with Special Names. Such units are listed in Table 8, on next page. The CIPM discourages the use of CGS* units which have special names.

12.2 Other Units Generally Deprecated

As regards units outside the International System which do not come under Section 10, the CIPM considers that it is generally preferable to avoid them, and to use instead units of the International System. Some of those units are listed in Table 9.

*CGS refers to the centimeter-gram-second system which has been superseded by the SI.

Copyright ASME International
Provided by IHS under license with ASME
No reproduction or networking permitted without license from IHS
Not for Resale

TABLE 8–CGS UNITS WITH SPECIAL NAMES[3]
(Not to be used in ASME publications)

Name	Symbol	Value in SI Units
erg	erg	1 erg = 10^{-7} J
dyne	dyn	1 dyn = 10^{-5} N
poise	P	1 P = 1 dyn·s/cm^2 = 0.1 Pa·s
stokes	St	1 St = 1 cm^2/s = 10^{-4} m^2/s
gauss	Gs, G	1 Gs corresponds to 10^{-4} T
oersted	Oe	1 Oe corresponds to $\frac{1000}{4\pi}$ A/m
maxwell	Mx	1 Mx corresponds to 10^{-8} Wb
stilb	sb	1 stilb = 1 cd/cm^2 = 10^4 cd/m^2
phot	ph	1 ph = 10^4 lx

[3]Special Publication 330, p. 16, National Bureau of Standards. (See Appendix 8.)

TABLE 9–OTHER UNITS[4]
(Not to be used in ASME publications)

Name	Value in SI Units
fermi	1 fermi = 1 fm = 10^{-15} m
metric carat	1 metric carat = 200 mg = 2×10^{-4} kg
torr	1 torr = 133.322 Pa
kilogram-force (kgf)	1 kgf = 9.806 65 N
calorie (cal)	1 cal = 4.1868 J
micron (μ)	1 μ = 1 μm = 10^{-6} m
X unit	1 X unit = 1.002 X 10^{-4} mm approximately
stere (st)	1 st = 1 m^3
gamma (γ)	1 γ = 1 nT = 10^{-9} T
gamma (γ)	1 γ = 1 μg = 10^{-9} kg
lambda (λ)	1 λ = 1 μl = 10^{-6} l

[4]Special Publication 330, p. 17, National Bureau of Standards. (See Appendix 8.)

Copyright ASME International
Provided by IHS under license with ASME
No reproduction or networking permitted without license from IHS
Not for Resale

SECTION 13. SI UNITS FOR ASME USE

TABLE 10—LIST OF SI UNITS FOR ASME USE

Quantity	Unit*	Symbol	Other Units or Limitations
Space and Time			
plane angle	radian	rad	degree (decimalized)
solid angle	steradian	sr	. . .
length	meter	m	nautical mile (navigation only)
area	square meter	m^2	. . .
volume	cubic meter	m^3	liter (L) for fluids only (Limit use to L and mL) (cc shall not be used)
time	second	s	minute (min), hour (h), day (d), week, and year
angular velocity	radian per second	rad/s	. . .
velocity	meter per second	m/s	kilometer per hour (km/h) for vehicle speed, knot for navigation only
Periodic and Related Phenomena			
frequency	hertz	Hz	(hertz = cycle per second)
rotational speed	radian per second	rad/s	rev. per second (r/s) rev. per minute (r/min)
Mechanics			
mass	kilogram	kg	. . .
density	kilogram per cubic meter	kg/m^3	. . .
momentum	kilogram-meter per second	kg·m/s	. . .
moment of momentum	kilogram-square meter per second	$kg·m^2/s$	. . .
angular momentum	kilogram-square meter per second	$kg·m^2/s$	. . .
acceleration	meter per second squared	m/s^2	. . .
moment of inertia	kilogram-square meter	$kg·m^2$	. . .
force	newton	N	. . .
moment of force (torque)	newton-meter	N·m	. . .
pressure and stress	pascal	Pa	(pascal=newton per square meter)
viscosity (dynamic)	pascal-second	Pa·s	. . .
viscosity (kinematic)	square meter per second	m^2/s	. . .

*Conversion factors between SI units and U.S. customary units are given in ASTM E380. (ANSI Z210.1). (See also Appendix 9.)

Copyright ASME International
Provided by IHS under license with ASME
No reproduction or networking permitted without license from IHS Not for Resale

TABLE 10–LIST OF SI UNITS FOR ASME USE (Cont'd)

Quantity	Unit*	Symbol	Other Units or Limitations
Mechanics (Cont'd)			
surface tension	newton per meter	N/m	. . .
energy, work	joule	J	kilowatt-hour (kW·h)
power	watt	W	. . .
impact strength	joule	J	. . .
Heat			
temperature-thermo.**	kelvin	K	degree Celsius (°C)
temperature–other than thermodynamic**	degree Celsius	°C	kelvin (K)
lin.expansion coeff.	meter per meter-kelvin	K^{-1}	$°C^{-1}$ m/(m·K)
quantity of heat	joule	J	. . .
heat flow rate	watt	W	. . .
density of heat flow rate	watt per meter squared	W/m^2	. . .
thermal conductivity	watt per meter-kelvin	W/(m·K)	W/(m·°C)
coeff. of heat transfer	watt per meter-squared-kelvin	$W/(m^2·K)$	$W/(m^2·°C)$
heat capacity	joule per kelvin	J/K	J/°C
specific heat capacity	joule per kilogram-kelvin	J/(kg·K)	J/(kg·°C)
specific energy	joule per kilogram	J/kg	. . .
specific enthalpy	kilojoule per kilogram	kJ/kg	. . .
specific entropy	kilojoule per kelvin-kilogram	kJ/(K·kg)	. . .
heat rate	kilojoule per kilowatt second	kJ/(kW·s)	. . .
Electricity and Magnetism			
electric current	ampere	A	. . .
electric charge	coulomb	C	. . .
vol.density of charge	coulomb per meter cubed	C/m^3	. . .
sur. density of charge	coulomb per meter squared	C/m^2	. . .
electric field strength	volt per meter	V/m	. . .
electric potential	volt	V	. . .
capacitance	farad	F	. . .
current density	ampere per meter squared	A/m^2	. . .
mag.field strength	ampere per meter	A/m	. . .
mag.flux density	tesla	T	. . .
magnetic flux	weber	Wb	. . .
self-inductance	henry	H	. . .
permeability	henry per meter	H/m	. . .
magnetization	ampere per meter	A/m	. . .

*Conversion factors between SI units and U.S. customary are given in ASTM E380. (ANSI Z210.1).

**Preferred use for temperature and temperature interval is degrees Celsius (°C), except for thermodynamic and cryogenic work where kelvins may be more suitable. For temperature interval, 1 K = 1°C exactly.

Copyright ASME International
Provided by IHS under license with ASME
No reproduction or networking permitted without license from IHS Not for Resale

TABLE 10—LIST OF SI UNITS FOR ASME USE (Cont'd)

Quantity	Unit*	Symbol	Other Units or Limitations
Electricity and Magnetism (Cont'd)			
resistance, impedance	ohm	Ω	. . .
conductance	siemens	S	. . .
resistivity	ohm-meter	Ω·m	. . .
conductivity	siemens per meter	S/m	. . .
reluctance	ampere per weber	H^{-1}	. . .
Light			
luminous intensity	candela	cd	. . .
luminous flux	lumen	lm	. . .
illumination	lux	lx	. . .
luminance	candela per meter-squared	cd/m^2	. . .

*Conversion factors between SI units and U.S. customary units are given in ASTM E380. (ANSI Z210.1).

SECTION 14. INTRODUCING SI UNITS IN ASME PUBLICATIONS

14.1 It is the policy of ASME that SI units of measurement should be included in all new papers, publications and revisions of ASME standards.

14.2 Each ASME committee shall have the option of giving preference to U.S. customary or SI units.

14.2.1 When preference is given to SI units, the U.S. customary units may be omitted or given in parentheses.

14.2.2 When U.S. customary units are given preference, the SI equivalent shall be given in parentheses, or in a supplementary table as described in Section 15.

14.3 The system of units to be used in referee decisions shall be stated in a note in each standard. For example, the note should read as follows when U.S. customary units are to be used:

Note: The values stated in U.S. customary units are to be regarded as the standard.

14.4 The calculated SI equivalent for a U.S. customary value should be rounded to the proper number of significant figures as described herein and in ANSI Z210.1. No attempt should be made to change to different values which are used or may be adopted by other countries, except as covered in 14.5 below.

14.5 In standards that have alternative or optional procedures based on instruments calibrated in either U.S. customary or SI units, converted values need not be included. If the optional procedures or dimensions produce equally acceptable results, the options may be shown similarly to conversions using the word "or" rather than parentheses; for example, in a 2-in gage length metal tension test specimen, the gage length may be shown as "2 in or 50 mm".

Copyright ASME International
Provided by IHS under license with ASME
No reproduction or networking permitted without license from IHS Not for Resale

14.6 A specific equivalent, for example, 25 mm (1.0 in), need be inserted only the first time it occurs in each paragraph of a standard.

14.7 Conventions for use of SI and U.S. customary units may differ. The equivalent expression should always be consistent with the units used. For example, liters per 100 kilometers vs miles per gallon (mpg), mm pitch (which is the crest-to-crest distance between two successive threads) vs threads per inch (tpi).

14.8 For methods of including SI equivalents in tables, see Section 15.

14.9 On simple illustrations the SI equivalents may be included in parentheses. On more complicated illustrations the dimensions are preferably indicated by letters and the corresponding SI units and U.S. customary shown in an accompanying table. In the case of charts or graphs, dual scales may be used to advantage.

14.10 The need for SI equivalents can be avoided for tolerances if they are expressed in percent.

SECTION 15. INTRODUCING SI UNITS IN TABLES

15.1 *Case 1, Limited Tabular Material.* Provide SI equivalents in tables in parentheses or in separate columns. Example is given in Appendix 1.

15.2 *Case 2, One or Two Large Tables.* When the size of a table and limitations of space (on the printed page) make it impractical to expand the table to include SI equivalents, the table should be duplicated in U.S. customary units and SI units. Example is given in Appendix 2. *If this procedure results in increasing the size of the standard significantly, it may be desirable to apply Case 3.*

15.3 *Case 3, Extensive Tabular Material.* Prepare a summary appendix listing all of the units that appear in the various tables, as shown in Appendix 3, or consider the use of footnotes, as shown in Appendix 4.

SECTION 16. METHODS OF REPORTING SI EQUIVALENTS FOR EXISTING STANDARDS UNDER REVISION

16.1 For text material in draft preparation, show the SI equivalent in the margin.

16.2 For tables insert the SI equivalents when there is sufficient space as illustrated. Example given in Appendix 5.

16.3 For tables where space does not permit the SI equivalents to be written in, retype the table.

16.4 For new illustrations it is preferable to indicate the dimensions with letters while tabulating both inch and SI values. Example given in Appendix 6.

16.5 For existing illustrations a tabulation of SI equivalents of customary units appearing in that illustration may be inserted beneath the illustration. Example given in Appendix 7.

Copyright ASME International
Provided by IHS under license with ASME
No reproduction or networking permitted without license from IHS
Not for Resale

APPENDIX 1

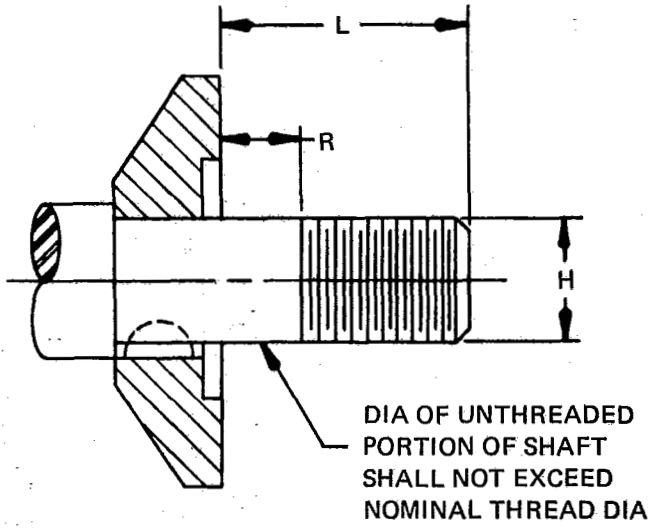

Example for Case 1

STRAIGHT WHEEL GRINDERS

H	L—In. (mm)		R
3/8-24 UNF-2A	1-1/8	(28.6)	
1/2-13 UNC-2A	1-3/4	(44.4)	Governed by
5/8-11 UNC-2A	2-1/8	(54.0)	thickness of
5/8-11 UNC-2A	3-1/8	(79.4)	wheel used
3/4-10 UNC-2A	3-1/4	(82.6)	

Example for Case 1—Alternate Method

STRAIGHT WHEEL GRINDERS

H	L—In.	L—mm	R
3/8-24 UNF-2A	1-1/8	28.6	
1/2-13 UNC-2A	1-3/4	44.4	Governed by
5/8-11 UNC-2A	2-1/8	54.0	thickness of
5/8-11 UNC-2A	3-1/8	79.4	wheel used
3/4-10 UNC-2A	3-1/4	82.6	

Copyright ASME International
Provided by IHS under license with ASME
No reproduction or networking permitted without license from IHS
Not for Resale

APPENDIX 2

Example for Case 2

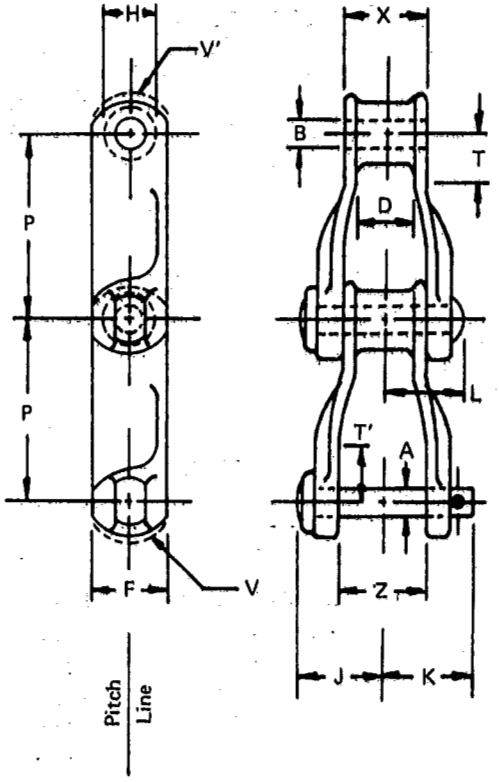

A – Pin Diameter
B – Inside Diameter of Barrel
D – Inside Width for Sprocket Contact
F – Chain Height
H – Barrel Outside Diameter
J – Pin Head to Centerline
K – Pin Head to Centerline
L – Riveted Head to Centerline
P – Chain Pitch (This is a Theor. Ref. Dimen. used for basic calculations.)
T – Straight before bend – barrel end
T – Straight before bend – pin end
V – Sidebar end Clearance Radius – pin end
V' – Sidebar end Clearance Radius – barrel end
X – Width of link at Barrel end extending to a point on the pitch line **T** inches from the centerline as shown.
Z – Width between Sidebars at Pin End extending to a point on the pitch line **T'** inches from the centerline as shown

Copyright ASME International
Provided by IHS under license with ASME
No reproduction or networking permitted without license from IHS Not for Resale

APPENDIX 2 (Cont'd)

Example for Case 2 (Cont'd)

GENERAL CHAIN DIMENSIONS, PROOF TEST LOAD, STRAND LENGTH, AND MEASURING LOAD FOR CHECKING CHAIN LENGTHS

Dimensions in Inches

Chain No.	H60	H74	H75	H78	H82	H124
P	2.308	2.609	2.609	2.609	3.075	4.000
A	0.312	0.375	0.312	0.500	0.562	0.750
F	0.73	1.00	0.75	1.12	1.25	1.56
H	0.75	0.88	0.72	0.88	1.19	1.44
Proof test load (lb)						
Class M	2 800	4 000	2 800	6 400	8 000	12 000
Class P	3 500	5 000	3 500	8 000	10 000	15 000
No. of pitches per nominal						
120 in. strand	52	46	46	46	39	30
Theoretical length of nominal						
120 in. strand	120.02	120.01	120.01	120.01	119.92	120.00
Measuring load (lb)	190	270	190	430	540	810

Dimensions in Millimeters

Chain No.	H60	H74	H75	H78	H82	H124
P	58.62	66.27	66.27	66.27	78.10	101.60
A	7.92	9.52	7.92	12.70	14.27	19.05
F	18.5	25.4	19.0	28.4	31.8	39.6
H	19.0	22.4	18.3	22.4	30.2	36.6
Proof test load (kilonewtons)						
Class M	12.5	17.8	12.5	28.5	35.6	53.4
Class P	15.6	22.2	15.6	35.6	44.5	66.7
No. of pitches per nominal						
3048 mm strand	52	46	46	46	39	30
Theoretical length of nominal						
3048 mm strand	3 048.5	3 048.3	3 048.3	3 048.3	3 046.0	3 048.0
Measuring load (newtons)	850	1 200	850	1 910	2 400	3 600

Copyright ASME International
Provided by IHS under license with ASME
No reproduction or networking permitted without license from IHS
Not for Resale

APPENDIX 3

Example for Case 3—Listing of All Units Appearing in a Document

RELIEF HOLE DIA	
mm	in.
3.2	0.126
4	0.157
5.8	0.228
8	0.312
9.5	0.374
12	0.472
14.75	0.581
17.5	0.689
20.5	0.807
23.75	0.935
27	1.063

TOLERANCE	
mm	in.
0.25	0.010

STRESS	
MPa	psi
6.7	970
10	1 500
20	3 000
41	5 900
70	10 200
100	14 500
205	29 700
415	60 200
670	97 200

FLUID PRESSURES	
kPa*	psi
105	15.2
210	30.5
415	60.2
670	97.2
1050	152
2100	304
4150	602
6900	1000

*Absolute or gage, as appropriate.

kPa	in. Hg 60°F
1.5	0.44
3	0.9
7	2.1
10	3.0
35	10.4
50	14.8

kPa	in. H_2O 60°F
0.1	0.4
0.5	2.0
1.2	4.8
2.5	6.2
5	20

Copyright ASME International
Provided by IHS under license with ASME
No reproduction or networking permitted without license from IHS Not for Resale

APPENDIX 4

Example for Case 3—Use of Footnotes

DIMENSIONS AND WEIGHTS OF WELDED AND SEAMLESS STEEL PIPE

Size				Identification		
Nominal (in.)	O.D. (in.)	Wall Thickness (in.)*	Plain End Weight (lb/ft)**	API Standard	Standard (STD) X-strong (XS) XX-strong (XXS)	Sched. No.
2-1/2	[2.875]	0.083	2.47	5L 5LX		
		0.109	3.22	5L 5LX		
		0.125	3.67	5L 5LX		
		0.141	4.12	5L 5LX		
		0.156	4.53	5LX		
		0.172	4.97	5LX		
		0.188	5.40	5LX		
		0.203	5.79	5L 5LX	STD	40
		0.216	6.13	5LX		
		0.250	7.01	5LX		
		0.276	7.66	5L 5LX	XS	80
		0.375	10.01			160
		0.552	13.69	5L 5LX	XXS	
3	[3.500]	0.083	3.03	5L 5LX		
		0.109	3.95	5L 5LX		
		0.125	4.51	5L 5LX		
		0.141	5.06	5L 5LX		
		0.156	5.57	5L 5LX		
		0.172	6.11	5LX		
		0.188	6.65	5L 5LX		
		0.216	7.58	5L 5LX	STD	40
		0.250	8.68	5L 5LX		
		0.281	9.66	5L 5LX		
		0.300	10.25	5L 5LX	XS	80
		0.438	14.32			160
		0.600	18.58	5L 5LX	XXS	
3-1/2	[4.000]	0.083	3.47	5L 5LX		
		0.109	4.53	5LX		
		0.125	5.17	5L 5LX		
		0.141	5.81	5LX		
		0.156	6.40	5L 5LX		
		0.172	7.03	5LX		
		0.188	7.65	5L 5LX		
		0.226	9.11	5L 5LX	STD	40
		0.250	10.01	5L 5LX		
		0.281	11.16	5L 5LX		
		0.318	12.50	5L 5LX	XS	80

*1 in. = 25.4 mm
**1 lb/ft = 1.49 kg/m

Copyright ASME International
Provided by IHS under license with ASME
No reproduction or networking permitted without license from IHS
Not for Resale

APPENDIX 5

Classification No.	10 X 20 10 X 24
Plant Equipment Code	3415-13

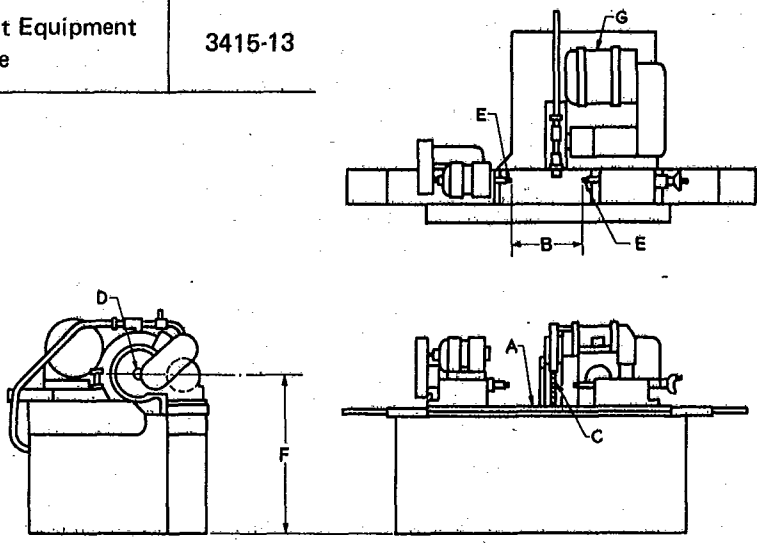

LIGHT DUTY CONSTRUCTION–DESIGNED TO USE AT LEAST 1½ HP (1.1 kW) AT THE WHEEL

Description	Specification	
A–Swing-work clearance diameter (min)	10 in	(254 mm)
B–Distance between centers (min)	20 – 24 in	(508 – 610 mm)
C–Grinding wheel diameter and width (min)	10 X 1 in	(254 X 25.4 mm)
D–Grinding wheel hole size	(See Note 2)	
E–Headstock and footstock center taper	Jarno	
F–Distance ℄ to bottom of machine (recommended)	42 in	(1070 mm)
G–Grinding wheel spindle drive motor (min)	1½ HP	(1.1 kW)
H–Wheel head swivel (min)	90°R & L	

Copyright ASME International
Provided by IHS under license with ASME
No reproduction or networking permitted without license from IHS
Not for Resale

APPENDIX 6

SPINDLE FOR GEARED CHUCK

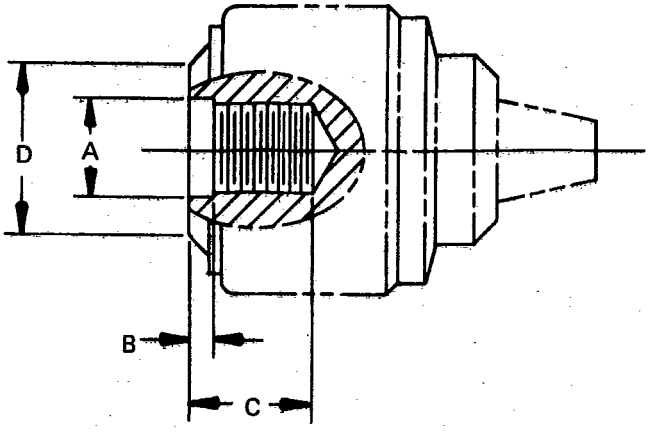

THREADED CHUCKS

INCH

Nominal Dia and Thread	A Max	A Min	B Min	C Min	D* Nom
3/8 – 24	0.385	0.380	0.115	19/32	5/8
1/2 – 20	0.510	0.503	0.115	19/32	7/8
5/8 – 16	0.635	0.629	0.146	25/32	1-1/8
3/4 – 16	0.760	0.754	0.146	13/16	1-1/4

*Reference Manufacturer's Practice.

MILLIMETER

Nominal Dia & Thread (Inch)	A Max	A Min	B Min	C Min	D* Nom
3/8 – 24	9.78	9.65	2.92	15.1	15.8
1/2 – 20	12.9	12.8	2.92	15.1	22.2
5/8 – 16	16.1	16.0	3.71	19.8	28.6
3/4 – 16	19.3	19.2	3.71	20.6	31.8

*Reference Manufacturer's Practice.

Copyright ASME International
Provided by IHS under license with ASME
No reproduction or networking permitted without license from IHS
Not for Resale

APPENDIX 7

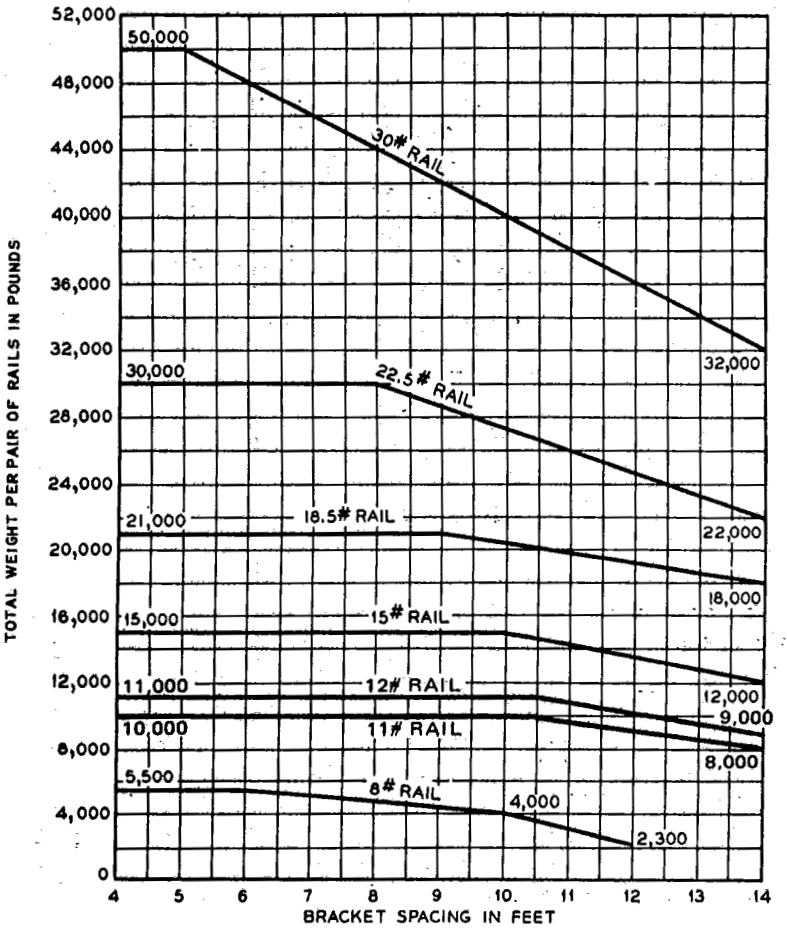

MAXIMUM WEIGHT OF CAR WITH RATED LOAD OR OF COUNTERWEIGHT WITH SAFETY FOR A PAIR OF GUIDE RAILS

1 lb = 0.454 kg
1 ft = 304.8 mm

Copyright ASME International
Provided by IHS under license with ASME
No reproduction or networking permitted without license from IHS
Not for Resale

APPENDIX 8

Applicable Publications

ISO (Order from ANSI)

R 370 Conversion of Toleranced Dimensions from Inches into Millimeters and Vice Versa.

1000 Rules for the Use of Units of the International System of Units.

ASTM–American Society of Testing Materials, 1916 Race Street, Philadelphia, Pa. 19103.

Instructions to ASTM Technical Committees on Metric Conversion, Prepared by ASTM Special Committee on Metric Practice as an Adjunct to Metric Practice Guide E380.

E380–Metric Practice Guide

U.S. Department of Commerce

NBS SP 330 The International System of Units (SD Cat. No. C13.10:330/4). Order from: Superintendent of Documents, U.S. Government Printing Office, Washington, D.C. 20402. (Order by SD Catalog No. C13.10:330/4.) – Stock Number 003-003-01784-1)

ANSI–American National Standards Institute, 1430 Broadway, New York, N.Y. 10018.

Z210.1–Metric Practice Guide (same as ASTM E380).

SAE–Society of Automotive Engineers, Inc., 400 Commonwealth Drive, Warrendale, Pennsylvania 15086.

Rules for the Use of SI (Metric) Units in SAE Reports.

ASME–The American Society of Mechanical Engineers
United Engineering Center, 345 East 47th Street,
New York, N.Y. 10017

Y14.5–1973 Dimensioning and Tolerancing

Copyright ASME International
Provided by IHS under license with ASME
No reproduction or networking permitted without license from IHS Not for Resale

APPENDIX 9

Commonly Used Conversion Factors (for others, see ASTM–380)

Quantity	Conversion	Factor
Plane angle	degree to rad	1.745 329 E–02
Length	in to m	2.54* E–02
	ft to m	3.048* E–01
	mile to m	1.609 344*E+03
Area	in^2 to m^2	6.451 600*E–04
	ft^2 to m^2	9.290 304*E–02
Volume	ft^3 to m^3	2.831 685 E–02
	US gallon to m^3	3.785 412 E–03
	in^3 to m^3	1.638 706 E–05
	oz(fluid, US) to m^3	2.957 353 E–05
	liter to m^3	1.000 000 E–03
Velocity	ft/min to m/s	5.08* E–03
	ft/sec to m/s	3.048* E–01
	km/h to m/s	2.777 778 E–01
	mile/h to m/s	4.470 4* E–01
	mile/h to km/h	1.609 344*E+00
Mass	oz(avoir) to kg	2.834 952 E–02
	lb(avoir) to kg	4.535 924 E–01
	slug to kg	1.459 390 E+01
Acceleration	ft/s^2 to m/s^2	3.048* E–01
	std. grav. m/s^2	9.806 65* E+00
Force	kgf to N	9.806 65* E+00
	lbf to N	4.448 222 E+00
	poundal to N	1.382 550 E–01
Bending, Torque	kgf-m to N·m	9.806 65* E+00
	lbf-in to N·m	1.129 848 E–01
	lbf-ft to N·m	1.355 818 E+00

The factors are written as a number greater than one and less than ten with six or less decimal places, The number is followed by the letter E (for exponent), a plus or minus symbol, and two digits which indicate to power of 10 by which the number must be multiplied to obtain the correct value.

For example

1.745 329 E – 02 is $1.745\ 329 \times 10^{-2}$ or 0.017 453 29

*Relationships that are exact in terms of the base units.

Copyright ASME International
Provided by IHS under license with ASME
No reproduction or networking permitted without license from IHS Not for Resale

APPENDIX 9 (Cont'd)

Commonly Used Conversion Factors (for others, see ASTM E–380)

Quantity	Conversion	Factor
Pressure, stress	kgf/m^2 to Pa	9.806 65* E+00
	$poundal/ft^2$ to Pa	1.488 164 E+00
	lbf/ft^2 to Pa	4.788 026 E+01
	lbf/in^2 to Pa	6.894 757 E+03
Energy, work	Btu(IT) to J	1.055 056 E+03
	Calorie(IT) to J	4.186 8* E+00
	ft lbf to J	1.355 818 E+00
Power	hp(550 ft lbf/s) to W	7.456 999 E+02
Temperature*	°C to K	$t_K = t\,°_C + 273.15$
	°F to K	$t_K = (t\,°_F + 459.67)/1.8$
	°F to °C	$t\,°_C = (t\,°_F - 32)/1.8$
Temperature interval	°C to K	1.0* E+00
	°F to K or °C	5.555 556 E–01

*°F should be converted to °C. Absolute temperatures should be converted to K.

Copyright ASME International
Provided by IHS under license with ASME
No reproduction or networking permitted without license from IHS
Not for Resale

APPENDIX 10

SAMPLE TABLE FOR MAXIMUM ALLOWABLE STRESS VALUES IN TENSION FOR CARBON AND LOW ALLOY STEEL IN MEGAPASCALS-MPa

Nominal Composition	P. No.	Group No.	Product Form	Spec. No.	Grade	Notes	Spec. Min. Yield– MPa	Spec. Min. Tensile MPa	For Metal Temperatures Not Exceeding °C														Spec. No.	Grade
									–30 to 325	350	375	400	425	450	475	500	525	550	575	600	625	650		
...	1	1	Plate	SA-285	C	(4) (13) (27)	207	380	95	95	91	80	70	57	45	...	...	...	...	...	...	...	SA-285	C
C-Si	1	1	Plate	SA-515	70	(27)	262	483	120	120	111	96	81	67	50	36	22	...	...	...	...	...	SA-515	70
2¼Cr-1Mo	5	1	Forg.	SA-336	F22 Norm. and temp.	(14)	310	517	120	120	120	120	120	112	101	84	56	46	35	26	16	...	SA-336	F22 Norm. and temp.

Copyright ASME International
Provided by IHS under license with ASME
No reproduction or networking permitted without license from IHS
Not for Resale

SI-1 ASME Orientation and Guide for Use of SI (Metric) Units — Ninth Edition
Book No. E00058

SI-2 ASME Text Booklet — SI Units in Strength of Materials — Second Edition
Book No. E00082

SI-3 ASME Text Booklet — SI Units in Dynamics
Book No. E00083

SI-4 ASME Text Booklet — SI Units in Thermodynamics
Book No. E00084

SI-5 ASME Text Booklet — SI Units in Fluid Mechanics
Book No. E00085

SI-6 ASME Text Booklet — SI Units in Kinematics
Book No. E00086

SI-7 ASME Text Booklet — SI Units in Heat Transfer
Book No. E00087

SI-8 ASME Text Booklet — SI Units in Vibration
Book No. E00088

SI-9 ASME Text Booklet — Guide for Metrication of Codes and Standards SI (Metric) Units
Book No. E00089

ORDER FROM

ASME Order Department • 345 E. 47th Street • New York, NY 10017

Copyright ASME International
Provided by IHS under license with ASME
No reproduction or networking permitted without license from IHS
Not for Resale

Copyright ASME International
Provided by IHS under license with ASME
No reproduction or networking permitted without license from IHS
Not for Resale