AN AMERICAN NATIONAL STANDARD

# ASME RTP-1d–2004

# ADDENDA

to

## ASME RTP-1–2000
## REINFORCED THERMOSET PLASTIC CORROSION RESISTANT EQUIPMENT

THE AMERICAN SOCIETY OF MECHANICAL ENGINEERS
Three Park Avenue • New York, NY 10016

Copyright ASME International
Provided by IHS under license with ASME
No reproduction or networking permitted without license from IHS
Not for Resale

Date of Issuance: December 30, 2004

ASME is the registered trademark of The American Society of Mechanical Engineers.

This code or standard was developed under procedures accredited as meeting the criteria for American National Standards. The Standards Committee that approved the code or standard was balanced to assure that individuals from competent and concerned interests have had an opportunity to participate. The proposed code or standard was made available for public review and comment that provides an opportunity for additional public input from industry, academia, regulatory agencies, and the public-at-large.

ASME does not "approve," "rate," or "endorse" any item, construction, proprietary device, or activity.

ASME does not take any position with respect to the validity of any patent rights asserted in connection with any items mentioned in this document, and does not undertake to insure anyone utilizing a standard against liability for infringement of any applicable letters patent, nor assume any such liability. Users of a code or standard are expressly advised that determination of the validity of any such patent rights, and the risk of infringement of such rights, is entirely their own responsibility.

Participation by federal agency representative(s) or person(s) affiliated with industry is not to be interpreted as government or industry endorsement of this code or standard.

ASME accepts responsibility for only those interpretations of this document issued in accordance with the established ASME procedures and policies, which precludes the issuance of interpretations by individuals.

No part of this document may be reproduced in any form,
in an electronic retrieval system or otherwise,
without the prior written permission of the publisher,
except as otherwise noted on forms contained in this document.

Copyright © 2004 by
THE AMERICAN SOCIETY OF MECHANICAL ENGINEERS
All rights reserved
Printed in U.S.A.

--`,,,`,,`-`-`,,`,,`,`,,`---

Copyright ASME International
Provided by IHS under license with ASME
No reproduction or networking permitted without license from IHS

Not for Resale

# ASME RTP-1d–2004

Following approval by the RTP Committee and ASME, and after public review, this ASME RTP-1d–2004 was approved by the American National Standards Institute on October 6, 2004.

Addenda to the 2000 edition of ASME RTP-1 are issued in the form of replacement pages. Revisions, additions, and deletions are incorporated directly into the affected pages. It is advisable, however, that this page, the Addenda title and copyright pages, and all replaced pages be retained for reference.

## SUMMARY OF CHANGES

This is the fourth and last Addenda to be published to ASME RTP-1–2000. The first Addenda was incorporated into the 2000 edition; the second Addenda was published on January 15, 2003; and the third Addenda was published on December 31, 2003.

Replace or insert the pages listed. Changes given below are identified on the pages by a margin note, **(d)**, placed next to the affected area. Revisions to the 2000 edition are indicated by **(00)**, and previous Addenda changes are indicated by **(a)**, **(b)**, and **(c)**. The pages not listed are the reverse sides of the listed pages and contain no changes.

| *Page* | *Location* | *Change* |
|---|---|---|
| vii | Contents | Updated to reflect Addenda |
| 5 | 1-520(c) | Revised |
| 6 | 1-550(b) | Subparagraphs (4) and (5) deleted |
| 14 | 2-320(e) | Added |
| | 2A-222 | Revised |
| 18 | 2A-400(e) | Revised |
| 60–61.1 | 7-600 | Subparagraphs (a), (b), (d), and (g) revised |
| | Table 7-1 | Revised |
| 65 | 7-1000(d)(3)(d) | Revised |
| 83 | M2D-200(a) | Revised |
| 84 | M2E-300(d) | Warning revised |
| 112 | M4-100(b) | Revised |
| 114 | M5-300(d) | Revised |
| 118 | M5-450(b) | Revised |
| 297–299.1 | Nonmandatory Appendix NM-10 | Title revised |
| | NM10-100(a) | Revised |
| | NM10-500 | Added |



Copyright ASME International
Provided by IHS under license with ASME
No reproduction or networking permitted without license from IHS
Not for Resale

Copyright ASME International
Provided by IHS under license with ASME
No reproduction or networking permitted without license from IHS
Not for Resale

M12G-2 Post-Test Sectioning of Dual Laminate Demonstration Vessel for Final Inspection and Display ..... 182

## Tables

M1A-1 Veil and Mat Reinforcement Log Sheet ..... 70
M1B-1 Roving Reinforcement Log Sheet ..... 72
M1C-1 Fabric Reinforcement Log Sheet ..... 75
M1D-1 Milled Fiber Reinforcement Log Sheet ..... 78
M2C-1 Recommended Numerical Standards for Comparator Viscosity Tubes ..... 82
M2F-1 Resin Log Sheet ..... 85
M2F-2 Curing Agents Log Sheet ..... 86
M2G-1 Common Additives Log Sheet ..... 87
M3-1 Glass Volume Fraction and Density ..... 109
M3-2 Layer Properties ..... 109
M3-3 Products of Layer Properties ..... 109
M3-4 Summary Table of Laminate Properties ..... 110
M5-1 Laminator Qualification Report ..... 119
M5-2 Secondary Bonder Qualification Report ..... 120
M6-1 User's Basic Requirements Specification (UBRS) ..... 123
M8-1 Acceptance Criteria ..... 136
M12B-1 ASTM Specifications for Thermoplastic Materials ..... 147
M12B-2 Typical Thermoplastic Properties ..... 148
M12B-3 Thermoplastic Sheet or Roll Receiving Log ..... 150
M12B-4 Thermoplastic Sheet Visual Inspection Acceptance Criteria ..... 151
M12B-5 Welding Material Receiving Log ..... 153
M12B-6 Bonding Resin Receiving Log ..... 155
M12B-7 Conductive Material Receiving Log ..... 158
M12B-8 Thermoplastic Shape Receiving Log ..... 159
M12D-1 Visual Weld Defects ..... 164
M12E-1 Lining Visual Inspection Acceptance Criteria ..... 174
M12G-1 User's Basic Requirements Specification (UBRS) ..... 178
M12H-1 Welder Qualification Report ..... 184
M12H-2 Weld Strength Requirements ..... 186
M13-1 Balsa Wood Core Inspection Sheet ..... 188.2

## Nonmandatory Appendices

NM-1 Design Examples ..... 189
NM-2 Design of Integral Body Flanges ..... 208
NM-3 Seismic, Wind, and Snow Loadings ..... 224
NM-4 Hold-Down Lug Design ..... 234
NM-5 Ring Support of Vessels ..... 244
NM-6 Example of a Fabricator's Quality Control Program ..... 259
NM-7 Acceptance Inspection by User's Inspector ..... 284
NM-8 Handling and Shipping ..... 291
NM-9 Installation of RTP Vessels ..... 294
NM-10 Requirements and Responsibilities of User (or User's Agent), Fabricator, Inspector, and Certified Individual ..... 297
NM-11 Design for 250 lb Concentrated Load on a Torispherical Head ..... 300
NM-12 FRP Flange Design ..... 302
NM-13 Stress Analysis Methods ..... 306
NM-14 ISO 9001 Quality Control System ..... 323
NM-15 Flat Cored Plate Design ..... 329.1



Copyright ASME International
Provided by IHS under license with ASME
No reproduction or networking permitted without license from IHS Not for Resale

## Figures


NM1-1 Toriconical Head ..... 190
NM1-2 Stress Intensity in a Toriconical Head ..... 192
NM1-3 Horizontal Tank ..... 193
NM1-4 Pressure Distribution ..... 194
NM1-5 Saddle Reaction ..... 195
NM1-6 Stress Along Top Meridian, Initial Try ..... 197
NM1-7 Stress Along 45 Deg Meridian, Initial Try ..... 198
NM1-8 Stress Along 90 Deg Meridian, Initial Try ..... 199
NM1-9 Stress Along 135 Deg Meridian, Initial Try ..... 200
NM1-10 Stress Along Bottom Meridian, Initial Try ..... 201
NM1-11 Stress Along Top Meridian, Final Try ..... 203
NM1-12 Stress Along 45 Deg Meridian, Final Try ..... 204
NM1-13 Stress Along 90 Deg Meridian, Final Try ..... 205
NM1-14 Stress Along 135 Deg Meridian, Final Try ..... 206
NM1-15 Stress Along Bottom Meridian, Final Try ..... 207
NM2-1 Design of Flat-Face Integral Body Flanges With Full-Face Gaskets ..... 211
NM2-2 Values of *T, U, Y,* and *Z* (Terms Involving *K*) ..... 213
NM2-3 Values of *F* (Integral Flange Factors) ..... 218
NM2-4 Values of *V* (Integral Flange Factors) ..... 219
NM2-5 Values of *f* (Hub Stress Correction Factors) ..... 220
NM2-6 Design of Flat-Face Integral Body Flanges With Full-Face Gaskets (Example Calculation — 72 in. Flange at 30 psi) ..... 221
NM3-1 Mass Fractions for Fixed and Sloshing Contents ..... 230
NM3-2 Centroidal Distances for Fixed and Sloshing Contents ..... 230
NM3-3 Sloshing Period as a Function of *D* (ft) and Aspect Ratio *D/H* ..... 231
NM3-4 Shear Stress Parameter $C_s$ ..... 233
NM4-1 Wound-On Hold-Down Lug ..... 235
NM4-2A Secondary Bonded Hold-Down Lug, Type A ..... 236
NM4-2B Secondary Bonded Hold-Down Lug, Type B ..... 237
NM4-3 Moment Coefficient $M_L$ ..... 238
NM4-4 Uplift Coefficient $P_G$ ..... 238
NM4-5 Recommended Hold-Down Clip ..... 239
NM5-1 Lug ..... 249
NM5-2 Lugs on Band ..... 250
NM5-3 Ring Support of Vessels ..... 251
NM5-4 Moment Coefficient $M_L$ ..... 252
NM5-5 Geometric Quantities ..... 253
NM5-6 Example Cross Section ..... 254
NM5-7 Split-Ring Flange ..... 255
NM5-8 Ring Design Chart for Three Lugs ..... 256
NM5-9 Ring Design Chart for Four Lugs ..... 257
NM5-10 Ring Design Chart for Eight Lugs ..... 258
NM6-1 Organization Chart ..... 262
NM7-1 Recommended Fabrication Tolerances ..... 289
NM8-1 Lifting Vessel With Spreader Bar ..... 291
NM8-2 Strongback for Lifting ..... 292
NM8-3 Use of Strongbacks ..... 292
NM9-1 Flat-Face Valve Flange to Flat-Face RTP Nozzle Flange and Full-Face Gasket ..... 295
NM9-2 Raised-Face Valve Flange to Flat-Face RTP Nozzle Flange With Filler Ring and Full-Face Gasket ..... 295




Copyright ASME International
Provided by IHS under license with ASME
No reproduction or networking permitted without license from IHS
Not for Resale

*(a)* education and experience (minimum of high school diploma and 5 years' experience in the RTP corrosion resistance industry);

*(b)* demonstrated inspection ability to the Fabricator employing him or her;

*(c)* satisfactory expertise and experience according to the complexity of the assignment;

*(d)* knowledge of RTP-1;

*(e)* knowledge of Fabricator's Quality Assurance Program and shop procedure;

*(f)* knowledge and ability to evaluate and monitor procedures and performance;

*(g)* knowledge of keeping and maintaining records.

### 1-430 Inspector's Duty

It is the duty of the Inspector to make all the inspections necessary to verify that the requirements of this Standard and the Fabricator's Design Report have been met. The Inspector of the vessel does not have the duty of determining the completeness or correctness of the design calculations; however, he or she does have the duty of establishing that the Fabricator of the vessel has the UBRS and the Fabricator's Design Report on file, and that the requirements of para. 1-300 have been met.

### 1-440 Access for the Inspector

The Inspector shall be permitted free access, at all times while work on the vessel is being performed, to all parts of the Fabricator's shop that concern the fabrication of the vessel and to the site of field fabrication or erection during the period of field fabrication, erection, and testing. The Fabricator shall keep the Inspector informed of the progress of the work and shall notify him or her in advance when the vessel or materials will be ready for any required tests or inspection.

## 1-500 FABRICATOR'S QUALITY CONTROL PROGRAM

A written description of the Quality Control Program, that explains which documents and procedures the Fabricator will use to produce equipment to this Standard, shall be available for review. The Quality Control Program shall be in accordance with the requirements of Appendix M-4. See Appendix NM-6 for an example of a Fabricator's Quality Control Program.

### 1-510 Fabricator's Demonstration of Capability

See Part 7.

### 1-520 Accreditation

*(a)* In order for any vessel to be marked with the ASME RTP-1 Symbol, the Fabricator shall first be accredited by ASME and shall possess a valid Certificate of Authorization (refer to Part 8). The Fabricator has the responsibility of complying with all the requirements of this Standard and the UBRS. The Fabricator also has the responsibility to certify that any work done by others also complies with all the requirements of this Standard. This responsibility includes providing the Inspector with all required information and assuring that the detailed examinations and tests are performed at the stages of fabrication that permit them to be meaningful.

*(b)* The Certified Individual, subsequent to completion of all inspections by the Inspector (see Part 6), shall complete and sign the Fabricator's Data Report or Fabricator's Partial Data Report as applicable. See Tables 1-2 and 1-3. The original copy of such Data Reports shall be sent or delivered to the User (or User's Agent). Copies of such Data Reports shall be retained in the Fabricator's record system in accordance with Appendix M-4, para. M4-300(c). **(00)**

*(c)* The Inspector shall sign the Inspector's Certification on the Fabricator's Data Report (or Partial Data Report) only when he/she is satisfied that all requirements of this Standard have been met. **(d)**

### 1-530 Requirements for Nameplate Construction and Attachment

*(a)* The method for identifying a vessel built to this Standard shall be a heavy paper or corrosion resistant metal nameplate not less than 4 in. × 6 in. in size. The nameplate shall be permanently attached to the vessel or to a corrosion resistant bracket permanently attached to the vessel as follows.

*(1)* Paper nameplates shall be laminated to the vessel surface or to an RTP bracket using resin-wetted layers of fiberglass surfacing veil.

*(2)* Metal nameplates shall be permanently attached to a metal or RTP bracket. Easily removable fasteners such as screws, bolts, and drive pins are not acceptable attachment methods.

*(3)* In the case of an insulated vessel, the bracket shall have a standoff height of at least 1 in. more than the insulation thickness.



Copyright ASME International
Provided by IHS under license with ASME
No reproduction or networking permitted without license from IHS
Not for Resale

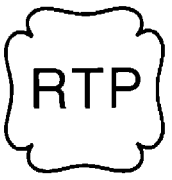


**FIG. 1-1 OFFICIAL ASME RTP-1 SYMBOL**

*(b)* The nameplate shall be marked with all information as required by para. 1-540.

*(c)* After attachment to the vessel or bracket, all data shall be visible and legible.

*(d)* Nameplates shall be located in such a position as to be easily visible after a vessel is installed. Users should designate required nameplate location prior to the time that drawings are approved for fabrication. Locations near manways, which after vessel installation would be near ground level or just above an operating platform, are recommended.

*(e)* In addition to the nameplate, Fabricators may affix or attach any such proprietary or User logos, or data plates, as desired, with no limitation on design, method of affixment, data content, or location, provided the structural integrity of the vessel or its usefulness is not compromised.

### 1-531 The Official ASME RTP-1 Symbol

*(a)* The official ASME RTP-1 Symbol to be applied to a vessel built according to all provisions of this Standard is shown in Fig. 1-1.

*(b)* The Fabricator who completes a vessel, and has held throughout its design and fabrication a valid Certificate of Authorization having the acceptance of the Inspector [see paras. 6-300(i) and 6-900(f)], may then apply the ASME RTP-1 Symbol, which together with the Fabricator's Data Report shall certify all requirements of this Standard have been met.

The ASME RTP-1 Symbol shall be applied after the successful completion of all tests required by paras. 6-910 through 6-960.

*(c)* RTP subassemblies or components of a vessel for which Partial Data Reports are required in Part 6 shall be marked by the component Fabricator with the following:

*(1)* the official ASME RTP-1 Symbol shown in Fig. 1-1 above the word "COMPONENT";

*(2)* name of the Fabricator of the part of the vessel, and certificate number, preceded by the words "Certified By."

### 1-540 Information and Marking Requirements on Nameplates

*(a)* Each nameplate shall be marked with the following:

*(1)* the official ASME RTP-1 Symbol shown in Fig. 1-1;

*(2)* name of the Fabricator of the vessel and certificate number;

*(3)* Fabricator's serial number for the vessel;

*(4)* year stamped;

*(5)* User's identification number (if specified in the UBRS);

*(6)* Manufacturer's Specific Product Identification for resin;

*(7)* appropriate Visual Inspection Level (Level 1 or Level 2);

*(8)* maximum allowable working pressure (psig at maximum temperature, °F);

*(9)* minimum allowable working pressure (psig at maximum temperature, °F);

*(10)* design basis specific gravity of contents;

*(11)* the designation "Critical Service" if applicable.

*(b)* Letters and figures indicating specific vessel design data must be at least $^{5}/_{16}$ in. high. Preprinted legend letters and figures must be at least $^{1}/_{8}$ in. high.

### 1-550 Design Requirements for Nameplates

*(a) Paper Nameplates*

*(1)* Paper must be at least 0.004 in. thick and of high quality, white bond or linen base.

*(2)* All markings must be black, highly visible and readable, on a white background.

*(3)* Markings, including the ASME RTP-1 Symbol, must be made in indelible ink of such nature as not to be water or resin soluble.

*(b) Metal Nameplates* **(d)**

*(1)* Material shall be 304 stainless steel or as specified in the UBRS.

*(2)* Thickness shall be sufficient to resist distortion due to the application of the marking, but in no case shall be less than 0.020 in.

*(3)* Markings may be produced by casting, etching, embossing, stamping, or engraving. The ASME RTP-1 Symbol shall be stamped. **(b)**



Copyright ASME International
Provided by IHS under license with ASME
No reproduction or networking permitted without license from IHS
Not for Resale

# PART 2
# MATERIALS

## (b) 2-100 SCOPE

Part 2 defines the materials comprising the glass fiber reinforced thermoset polyester and vinyl ester resin laminates, and the types of laminates used to fabricate the RTP corrosion resistant equipment. See Appendix M-12 for thermoplastic lining materials used in dual laminate vessels.

## 2-200 LAMINATE COMPOSITIONS

The composition of the allowable RTP laminates is limited to the specific materials in Part 2 and Appendices M-1 and M-2. Subpart 2A covers predefined standard laminates as representative flat laminates. Subpart 2B covers laminates developed using the Lamination Analysis Method, by which the modulus properties of laminates are obtained. Subpart 2C covers permissible tolerances for laminate thickness variation.

Construction and testing for properties of design basis laminates is required in Subpart 2A. Calculation of laminate properties by the Lamination Analysis Method (Appendix M-3) is required in Subpart 2B.

Minimum inspections and tests to be performed on reinforcements, prior to their use, are described in Appendix M-1.

Minimum inspections and tests to be performed on resins, curing agents, and common additives, prior to their use, are described in Appendix M-2.

### 2-210 Resin and Reinforcement Substitution

The Fabricator shall use the same resins and reinforcements during fabrication as used in the design basis laminates and Lamination Analysis Method, with the exception of the surfacing veil (mat), which may be changed as required for corrosion resistance.

## 2-300 MATERIALS

### 2-310 Resin Matrix

The resin shall be that polyester or vinyl ester specified by the User's Basic Requirements Specification. Only resins with an HDT of at least 180°F per ASTM D 648 with a 264 psi loading and a $\frac{1}{8}$ in. specimen, as published by the resin manufacturer, shall be used. When a maximum flame retardancy is specified by the UBRS, the flame spread rating shall be determined by the resin manufacturer according to ASTM E 84 using all mat laminates greater than 0.1 in. thick. Verification of the flame spread rating is *not* required as a part of laminate qualification. Since flame spread can be determined only on flat laminate panels, verification is *not* required on fabricated equipment. Prior to use in laminate fabrications, the resin shall be inspected, tested, and found acceptable by the inspections and tests specified in Appendix M-2.

*(a)* The catalyst/promoter/accelerator system shall be as recommended by the resin manufacturer and specified in the Fabricator's written procedures.

*(b)* The resin shall contain no pigment, dyes, colorants, or filler, except as follows.

*(1)* A thixotropic agent that does not interfere with visual inspection of laminate quality, or with the required corrosion resistance of the laminate, may be added for viscosity control.

NOTE: The addition of a thixotropic agent may reduce the resistance of a laminate to some corrosive chemical environments. It is the responsibility of the Fabricator to obtain approval from the selector of the resin prior to using a thixotropic agent in the inner surface (para. 2A-221) or the interior layer (para. 2A-222).

*(2)* Resin pastes used to fill crevices before overlay shall not be subject to these limitations. (b)

*(3)* Pigments, dyes, or colorants may be added to the exterior surface when specified by the UBRS.

NOTE: The addition of pigment, dyes, or colorants may interfere with visual inspection of laminate quality.

*(4)* Flame retardant synergists shall be used *only* when required in the UBRS. If fire retardant synergists were used to obtain the specified ASTM E 84 flame spread rating, the same type and amount must be used in the laminate.

NOTE: The addition of fire retardant synergists may interfere with visual inspection of laminate quality.

*(5)* Common additives, as described in Appendix



Copyright ASME International
Provided by IHS under license with ASME
No reproduction or networking permitted without license from IHS
Not for Resale

M-2, Article G, may be added without requalifying the standard laminate.

### 2-320 Fiber Reinforcement

Fiber reinforcements shall be in compliance with the references listed below for each material type:

*(a)* fiberglass surfacing veil (mat), organic fiber surfacing veil (mat), carbon fiber surfacing veil (mat), and fiberglass chopped strand mat — Appendix M-1, Article A;

*(b)* fiberglass spray-up roving and filament winding roving — Appendix M-1, Article B;

*(c)* fiberglass woven roving fabric, fiberglass unidirectional fabric, and fiberglass nonwoven multifabric — Appendix M-1, Article C;

*(d)* fiberglass milled fiber — Appendix M-1, Article D;

(d) *(e)* with the exception of surfacing veils, all fiberglass reinforcement shall be type E.

(b) **2-330 Balsa Wood Core**

Balsa wood core materials shall be in compliance with Appendix M-13.

## SUBPART 2A
## REQUIREMENTS FOR REPRESENTATIVE FLAT LAMINATES

### 2A-100 INTRODUCTION

A representative flat laminate is one made with the laminate sequence used in the design. Design basis laminates per para. 2A-300 are required.

### 2A-200 LAMINATE REQUIREMENTS

### 2A-210 Laminate Construction

Laminate construction shall be in accordance with the tabulated lay-up sequence for the specified type.

*(a)* Type I laminate structure is detailed in Table 2A-1.

*(b)* Type II laminate structure is detailed in Table 2A-2.

### 2A-220 Laminate Composition

Laminates shall consist of a corrosion resistant barrier (comprised of an inner surface and interior layer) and a structural layer. The reinforcement content of the corrosion barrier shall be 20–30% by weight.

**2A-221 Inner Surface Corrosion Resistant Barrier.** The inner surface exposed to the contents shall be a resin-rich layer reinforced with a surfacing veil providing a thickness of 0.01 in. to 0.02 in.

**2A-222 Interior Layer Corrosion Resistant Barrier.** (d) The inner surface layer, exposed to the contents, shall be followed with an interior layer. This layer is composed of resin reinforced with noncontinuous glass fiber strands (1.0 in. to 2.0 in. long), applied in a minimum of two plies totaling a minimum of 3 oz/sq ft. These plies shall be layers of chopped strand mat and/or chopped roving. Each ply of mat or pass of chopped roving shall be well rolled to thoroughly wet out reinforcement and remove entrapped air prior to the application of additional reinforcement. The combined thickness of the inner surface and interior layer shall not be less than 0.10 in. The corrosion resistant barrier is to exotherm and cool before the structural layer is applied.

### 2A-223 Structural Layer

*(a)* Application of the structural layer shall not alter the corrosion resistant barrier.

*(b)* The first ply of the structural layer of the laminate shall be one or more plies of noncontinuous glass fibers totaling $1\frac{1}{2}$ oz/sq ft, comprised of chopped strand mat and/or chopped roving.

*(c)* Continue lay-up in the sequence of plies stated for the specified laminate type.

*(d)* All edges of reinforcement material shall be lapped a minimum of 1 in. Lapped edges of adjacent layers shall be staggered.

*(e)* Interruption of the fabrication process to allow for an exotherm shall follow instructions noted on the appropriate table for the particular laminate type. The final ply of reinforcement before interruption for gel and exotherm shall be $\frac{3}{4}$ oz/sq ft minimum. The first ply of the ensuing lamination shall also be $\frac{3}{4}$ oz/sq ft minimum. Both the final and first plies shall be comprised of layers of chopped strand mat and/or layers of chopped roving. (00) (b)

### 2A-224 Outer Surface

*(a)* The outer surface of the finished laminate shall be a separately applied paraffinated resin coat that, when cured, passes the acetone test per ASTM C 582, para. 9.2.2. This outer surface coat shall either be applied over the final mat ply of the structural layer or over an additional resin-rich layer when required by (b) below.



Copyright ASME International
Provided by IHS under license with ASME
No reproduction or networking permitted without license from IHS
Not for Resale

## TABLE 2A-3 MINIMUM VALUES OF FLAT LAMINATES (b)

| Nominal Thickness, in. | Type | Ultimate Tensile Strength, psi [Note (1)] | Tensile Modulus, psi [Note (1)] | Ultimate Flexural Strength, psi [Note (2)] | Flexural Modulus, psi [Note (2)] |
|---|---|---|---|---|---|
| All | I | $9.0 \times 10^3$ | $1.00 \times 10^6$ | $16.0 \times 10^3$ | $0.70 \times 10^6$ |
| 0.22 | II | $12.0 \times 10^3$ | $1.30 \times 10^6$ | $19.0 \times 10^3$ | $0.80 \times 10^6$ |
| 0.29 | II | $13.5 \times 10^3$ | $1.40 \times 10^6$ | $20.0 \times 10^3$ | $0.90 \times 10^6$ |
| 0.37 and above | II | $15.0 \times 10^3$ | $1.50 \times 10^6$ | $22.0 \times 10^3$ | $1.00 \times 10^6$ |

GENERAL NOTE: The tabulated values remain unchanged up to 180°F. Above that temperature, measured properties may decrease.

NOTES:
(1) ASTM D 638 at 73°F or ASTM D 5083 at 73°F.
(2) ASTM D 790 at 73°F.

Type I, 0.48 in. nominal thickness
Type I, 0.74 in. nominal thickness
Type II, 0.22 in. nominal thickness
Type II, 0.49 in. nominal thickness
Type II, 0.76 in. nominal thickness

When the corrosion barrier is excluded from the design as a contributor to the structural strength of the laminate per para. 6-930(d)(5)(d), the following design basis laminates shall include only the structural layer:

Type I, 0.35 in. nominal thickness
Type II, 0.37 in. nominal thickness

Properties of each type shall be established on flat laminates prepared under shop conditions. For Type II laminates, the woven roving is laid-up in square array with warp rovings parallel layer to layer, and test specimens are cut parallel to the warp rovings.

*(b)* For design purposes, properties at 73°F are acceptable up to 180°F. Where laminates are fabricated for use at design temperatures above 180°F, certification of strength and modulus per paras. 2A-400(a) and (b) shall be supplied at or above the specified temperature.

(b) *(c)* The thickness and glass content of laminates shall be based on the data obtained from the Fabricator's design basis laminates. For laminate Types I and II, thickness and glass content shall be determined from laminates described in para. 2A-300(a)(2). Six thickness and glass content per unit area readings shall be taken on each design basis laminate. They shall be taken at 1 in. to 2 in. from each corner, except for two readings taken from the middle of the laminate. The highest thickness and glass content per unit area reading taken (of the six) must be no more than 115% of the lowest reading taken. The six readings shall be averaged to give the design basis laminate thickness and glass content for each laminate tested. The average thickness value shall be from 85% to 115% of the nominal thickness listed in Tables 2A-1 and 2A-2.

NOTE: *Glass content per unit area* means weight per unit area and is not a weight percent value.

*(d)* The laminate compositions and minimum properties for Type I production laminates are given in Tables 2A-1 and 2A-3.

*(e)* The laminate compositions and minimum properties for Type II production laminates are given in Tables 2A-2 and 2A-3.

NOTE: The laminate properties found in Table 2A-3 are conservative and historically proven. They represent a compilation of data on the most available laminating materials.

## 2A-400 TEST METHODS

*(a)* Tensile strength and tensile modulus of elasticity shall be determined by ASTM D 638 or ASTM D 5083. The tensile modulus shall be determined using the data between 400 and 1,300 microstrain unless another strain range better represents the flat portion of the curve. Any strain range other than 400 and 1,300 microstrain shall be reported with the modulus value. Specimens shall be in accordance with Type III, Fig. 1 of ASTM D 638, or in accordance with para. 6.1.1 of ASTM D 5083, except that actual laminate thickness shall be used.

*(b)* Flexural strength and flexural modulus of elasticity shall be determined by ASTM D 790. The molded surface (corrosion barrier) shall be tested in compression.

*(c)* Glass content, weight percent, shall be determined in accordance with ASTM D 2584.

*(d)* When required, the residual undisturbed glass fiber plies from ASTM D 2584 shall be separated carefully and counted and/or weighed to confirm standard lay-up sequence.



Copyright ASME International
Provided by IHS under license with ASME
No reproduction or networking permitted without license from IHS
Not for Resale

(d) *(e)* Thickness shall be measured with a micrometer or caliper. When the configuration of the part will not allow the use of these instruments, a digital magnetic intensity instrument (ASTM D 4166) or an ultrasonic thickness gauge found to be accurate when measuring vessel cutouts shall be used.

*(f)* When required, thermal conductivity shall be measured in accordance with ASTM C 177.

*(g)* When required, thermal expansion shall be measured in accordance with ASTM D 696.

*(h)* For isotropic laminates, mechanical property testing in only one direction is required. For anisotropic laminates, testing in both the principal *x* and *y* directions is required.

## 2A-500 RECORDS

The results of all required tests shall be recorded and shall be available for review by the Inspector.

## 2A-600 ADDITIONAL STANDARD LAMINATE COMPOSITIONS FOR SUBPART 2A

Other standard laminates may be used only after they have been listed as acceptable in Subpart 2A. In order for the new laminate to receive proper consideration, information and data are required to properly categorize the laminate. In general, this information and data include, but are not necessarily limited to, the following.

*(a)* All materials of the laminate must be identified and suggested specifications provided for any material not covered in Appendices M-1 and M-2.

*(b)* The laminate information needed includes tensile strength, tensile modulus, glass content, and thickness. The information must be supplied in the form of Table 2A-1 and/or Table 2A-2, plus data for minimum properties of standard laminates, Table 2A-3. The data must be generated from laminates made under typical shop conditions and tested per para. 2A-400. The information must include the heat distortion temperature of the resin used, which is required to be 180°F or greater.

NOTE: The requester should consider supplying data on laminates made using two or more widely different specific gravity resins by three or more fabricators, together with the appropriate Type I and/or Type II control laminate data.

Where the laminate is intended for special applications, requires special handling, or has known limitations or susceptibility to failure in certain services, precautionary requirements and information should be included in the submittal. The data should be submitted on laminates intended for use in place of the design basis laminates of Type I and/or Type II, as outlined in para. 2A-300(a)(2). Examples of representative field experiences should be submitted.

NOTE: When the new laminate is a minor modification of an existing standard laminate, the data required may be reduced with the concurrence of the Committee. When the data supplied are insufficient for an adequate evaluation, the Committee will request additional data.

# SUBPART 2B
# REQUIREMENTS FOR LAMINATES DEVELOPED USING THE LAMINATION ANALYSIS METHOD

## 2B-100 LAMINATE COMPOSITION

Laminates shall consist of a corrosion resistant barrier (comprised of an inner surface and interior layer) and a structural layer.

### 2B-110 Inner Surface Corrosion Resistant Barrier

See para. 2A-221.

### 2B-120 Interior Layer Corrosion Resistant Barrier

See para. 2A-222.

### 2B-130 Structural Layer

*(a)* Application of the structural layer shall not alter the corrosion resistant barrier.

*(b)* The first layer of the structural portion of the laminate shall be one or more plies of chopped strand mat totaling $\frac{3}{4}$ oz/sq ft minimum or equivalent chopped roving saturated with resin. (c)

*(c)* The balance of the structural layer shall then be applied in strict duplication of the laminate sequence as designed per Appendix M-3.

### 2B-140 Outer Surface

See para. 2A-224.



Copyright ASME International
Provided by IHS under license with ASME
No reproduction or networking permitted without license from IHS

Not for Resale

*(e)* The Inspector shall record the results of the visual inspection in the inspection report.

(b) *(f) Balsa Wood Core Laminates*

*(1)* Visual inspection of the component shall be required from the interior side of the laminate to check for delamination of the balsa wood core.

*(2)* Laminates that are to have a balsa wood core applied over them after resin saturation and prior to curing shall be visually inspected prior to applying the balsa wood core.

*(3)* The Fabricator shall take the appropriate measures to ensure adhesion of the interior laminate to the balsa wood core.

## 6-950 Pressure Tests and Acoustic Emission Tests

*(a)* A water fill hydrostatic test shall be performed on all vessels designed to operate above 0.5 psig internal pressure. The test pressure at the top of the vessel shall be 110% to 120% of the design pressure.

*(b)* A vessel designed to operate at or below 0.5 psig internal pressure shall be filled with water to at least its full designated liquid capacity, regardless of the specific gravity of the material to be contained.

*(c)* Vessels with an inside diameter less than or equal to 16 ft and a design external pressure less than or equal to 6 in. of water, and vessels larger than 16 ft inside diameter with a design external pressure less than or equal to 1 in. of water, are exempt from vacuum testing. All other vessels designed for vacuum service shall be evacuated to the design external pressure.

**WARNING: Suitable precautionary measures shall be taken to protect personnel and property from a catastrophic implosion failure during the test.**

It should be noted that attainment of full vacuum is not possible due to the limitations of evacuation equipment. Where vacuum tests are required, the User or User's Agent and the Fabricator must agree on the maximum allowable absolute pressure to be achieved during the test. Such agreement must be reached prior to the start of fabrication and must be documented in the UBRS and pressure test inspection report.

*(d)* The Fabricator shall have written procedures for pressure testing. The test pressure shall be held for a minimum of 2 hr. No visible leakage is permissible during the 2 hr hold on an internal pressure test. Some leakage is permissible during a vacuum test, provided the vacuum test pressure is held for the 2 hr minimum (this may require continuous connection to the vacuum source). Subsequent to all pressure testing, the vessel must pass a visual inspection per para. 6-940. During pressure testing, vessels shall be supported similar to the way they will be supported in service (so that the loads imposed on the vessel and the supports are similar to those of the expected service loads). If the pressure test generates an upward force, all anchor bolts must be secured. (b)

*(e)* When it is not practical to conduct a pressure test until the equipment has been installed in service position, the test may be conducted at the installation site.

*(f)* The Inspector shall witness all pressure tests, verify the test results, and record results of the test in the inspection report.

*(g)* If acoustic emission tests are required by the UBRS or are mandatory under design provisions of this Standard [see para. 3B-500(c)], the Inspector shall witness the tests and verify that the procedures used were in accordance with Appendix M-8.

## 6-960 Procedures for Rectifying Nonconformities or Imperfections

Appendix M-7 describes approved procedures for rectifying nonconformities or imperfections.

Mandatory documentation requirements for rectifying nonconformities or imperfections are outlined in Appendix M-4, para. M4-400(e).

The Inspector shall include the documentation of nonconformity or imperfection rectification in the inspection report.



Copyright ASME International
Provided by IHS under license with ASME
No reproduction or networking permitted without license from IHS
Not for Resale

# PART 7
# SHOP QUALIFICATION

## 7-100 SCOPE

This Part covers the requirements a Fabricator shall meet in order to qualify capability in accordance with this Standard. Included are the Fabricator's facilities, personnel, Quality Control Program, and required demonstration of capability.

## 7-200 GENERAL

A Fabricator shall seek to fabricate vessels according to the rules of this Standard only in the general size range for which the shop has experience.

### 7-210 Shop Survey

Fabricators who desire a shop location to be accredited according to the rules of this Standard shall be surveyed by an ASME survey team. The survey team shall verify that all requirements of Part 7 and Part 8 are met.

## 7-300 FABRICATOR'S FACILITIES AND EQUIPMENT

*(a)* The shop area and field site shall have designated areas for:

*(1)* storage of resin, catalyst, promoter, solvent, and other chemicals;

*(2)* resin mixing and dispensing;

(b) *(3)* bulk reinforcement and core material storage;

*(4)* tools and maintenance materials.

*(b)* Head molds (other than cone shapes or flat covers) shall be as follows:

*(1)* ASME torispherical flanged and dished heads, a 2:1 semielliptical head, or a hemispherical head;

*(2)* flanged flat head molds that will produce heads that satisfy para. 3A-260 and Fig. 4-3.

*(c)* Laboratory equipment shall be available for the quality control of bulk resin, reinforcing materials as received, and resin mixes as dispensed to fabrication personnel. Refer to Appendices M-1 and M-2.

## 7-400 PERSONNEL

The Fabricator's organization shall include specific personnel designated for each function listed below.

*(a) Design and Drafting.* As an alternative, this function may be performed by outside qualified engineering personnel. Design and drafting will be in accordance with requirements in Parts 1, 3, 4, and 6 of this Standard.

*(b) Quality Control.* See Appendix M-4.

*(c) Material Control and Issue.* This will include mixing and testing of resins, and inspection and cutting of reinforcement. See Appendices M-1 and M-2.

*(d) Fabrication*

*(e) Laminators and Secondary Bonders.* Laminators and Secondary Bonders shall be qualified in accordance with Appendix M-5.

## 7-500 QUALITY CONTROL PROGRAM, DOCUMENT HANDLING, AND RECORD SYSTEM

*(a)* The Fabricator shall establish and maintain an effective Quality Control Program throughout all phases of the fabricating process to ensure that all applicable requirements of this Standard are met. Refer to Part 6 and Appendices M-4 and NM-6.

*(b)* The Fabricator shall have a procedure that assures only the most current revision of latest and/or correct drawings, specifications, purchase orders, and quality control procedures are used for procurement, fabrication, and inspection purposes.

*(c)* A record keeping system satisfying the requirements of this Standard shall be in use and available for audit by the Certified Individual, the Inspector, and the User's representative.

## 7-600 DEMONSTRATION OF CAPABILITY (Demonstration Laminates) (d)

*(a)* Each Fabricator's shop must demonstrate the ability to fabricate laminates as required by the rules



Copyright ASME International
Provided by IHS under license with ASME
No reproduction or networking permitted without license from IHS
Not for Resale

## TABLE 7-1 REQUIRED RESINS AND ACCEPTABLE FABRICATION PROCESSES FOR DEMONSTRATION LAMINATES

(c)
(d)

| Type [Note (1)] | Initial Demonstration Laminate Thickness, in. | Redemonstration Laminate Min. Thickness, in. [Note (2)] | Required Resins [Note (3)] | Fabrication Process [Note (4)] | Qualification |
|---|---|---|---|---|---|
| Type I | 0.48 | 0.25 | 1 polyester or 1 vinyl ester | 1, 2 | All resins, all thicknesses |
| Type II | 0.49 | 0.37 | 1 polyester or 1 vinyl ester | 1, 2 | All resins, all thicknesses |
| Filament wound | 0.37 min. | 0.37 | 1 polyester or 1 vinyl ester | 3 | All resins, all thicknesses |

GENERAL NOTE: A Fabricator must qualify all those fabrication processes planned to be used to construct vessels to this Standard.

NOTES:
(1) Designates laminate reinforcement type.
(2) For redemonstration laminates, the fabrication process for Type I and Type II laminates may be 1 or 2.
(3) Generic classes of resins required for qualification.
(4) Process employed to produce the laminate:
1 — Hand lay-up.
2 — Spray-up using a chopper gun device.
3 — See para. 7-620(b).

of this Standard. This initial demonstration qualifies the Fabricator to produce laminates by those specific processes qualified for a maximum period of 5 years.

*(b)* Each Fabricator's shop must redemonstrate the ability to fabricate laminates, as required by the rules of this Standard, at no greater intervals than 5 years. The Fabricator may redemonstrate the ability to fabricate a laminate using either of the following methods:

*(1)* Produce acceptable demonstration laminates as required by the rules of this Standard for initial qualification.

*(2)* Provide acceptable Proof Tests for a specific type of laminate and specific process. See para. 6-930(d).

*(c)* Subparts 2A and/or 2B provide specific rules governing all laminates and refer to design basis laminates that a Fabricator is required to make in order to establish values for strength, thickness, and glass content. The demonstration laminates required by this Part are for the purpose of qualifying the Fabricator and shop procedures. They may also be used to qualify Laminators (see Appendix M-5). Demonstration laminates and design basis laminates are not the same in purpose; hence requirements in terms of configuration, quantity to be produced, and tests may differ.

*(d)* Initial demonstration laminates and the redemonstration of the Fabricator's ability to fabricate laminates are required for each type of laminate and each laminating process the Fabricator shall use on vessels fabricated to this Standard; refer to Table 7-1.

*(e)* Each demonstration laminate shall be identified and labeled by the Fabricator in accordance with para. 7-900.

*(f)* Demonstration laminates shall be tested in accordance with this Standard by an independent testing laboratory. The independent testing laboratory shall return the remains of the demonstration laminate and specimens with a certified written report. The report shall state the results of the tests.

*(g)* A Fabricator's shop is initially qualified to produce a specific type of laminate by a specific process provided the certified test report indicates that the demonstration laminate meets or exceeds the requirements of this Standard. See para. 7-700.

*(h)* Upon the successful completion of a Demonstration Laminate Test Program, Fabricators shall complete a document of "Demonstration Laminate Certification." This document is to be maintained within the Fabricator's quality control files and a copy shall be made available to a User, User's Agent, or Inspector on request. In this document the Fabricator shall certify, via the dated signature of his or her authorized agent, the following.

*(1)* The demonstration laminate samples were constructed according to all requirements of this Standard.



Copyright ASME International
Provided by IHS under license with ASME
No reproduction or networking permitted without license from IHS Not for Resale

*(2)* Tests were conducted on the demonstration laminates according to all requirements of this Standard.

*(3)* The test data has been carefully examined by the Fabricator and the results are in accordance with all requirements of this Standard.



--`,,,`,,,`-`-`,,`,,`,`,,`---

Copyright ASME International
Provided by IHS under license with ASME
No reproduction or networking permitted without license from IHS
Not for Resale

**TABLE 7-2 DIMENSIONAL REQUIREMENTS FOR HAND LAY-UP AND SPRAY-UP DEMONSTRATION LAMINATES**

| Req. No. | Requirements |
|---|---|
| (1) | A demonstration laminate must be square within ±0.3 deg, measuring 24 in. ±1/16 in. on each side. |
| (2) | The peak deviation from flatness of the inner surface shall not exceed 3/16 in. |
| (3) | The average spot thickness of a demonstration laminate shall be determined by procedures outlined in para. 6-920 and shall be within tolerances established in Subpart 2C. |
| (4) | Edges of a demonstration laminate shall be smooth and not jagged. Edge indentation or chips shall not exceed 1/32 in. in depth. |
| (5) | For demonstration laminates made by the spray-up process, a 24 in. x 24 in. test sample is to be cut from the center of an approximately 30 in. x 30 in. fabrication. |

*(4)* The next required date for demonstration of capability via demonstration laminates shall be indicated.

*(5)* Test reports from the independent testing laboratory are referenced by the specific date and/or reference number within the certification document and a copy attached thereto.

## 7-610 Hand Lay-Up and Spray-Up Demonstration Laminates

*(a)* All Fabricators must produce and qualify hand lay-up Type I and Type II laminates in accordance with requirements in Tables 7-1, 7-2, and 7-3.

*(b)* Those Fabricators who plan to produce laminates by the spray-up (chopper gun) process must also produce and qualify spray-up Type I and Type II laminates in accordance with requirements in Tables 7-1, 7-2, and 7-3.

*(c)* After fabrication, the Fabricator shall identify each demonstration laminate in accordance with the instructions in para. 7-900.

*(d)* The quality control records must contain a description of the fabrication procedure used to produce each demonstration laminate.

*(e)* The mechanical properties of each demonstration laminate shall be determined in accordance with para. 7-1000.

## 7-620 Filament Wound Demonstration Laminates

*(a)* Those Fabricators who plan to produce laminates by the filament winding process must produce and qualify filament wound laminates in accordance with the requirements in Table 7-1. Qualification for filament winding shall be in addition to qualification for Type I or Type II laminates. Both qualifications are required for Fabricators planning to construct filament wound vessels to this Standard, as Type I or Type II laminates are required for the fabrication of heads or when joining the subassemblies of vessels together.

*(b)* Since there are many process variations employed to produce filament wound laminates, each requiring distinctly different tooling, controls, and skills, this Standard requires that a Fabricator qualify all those process variations to be used in the construction of filament wound vessels to this Standard. **(c)**

Some examples of process variations, each requiring a demonstration laminate, are:

*(1)* dry continuous filament winding

*(2)* wet (bath) continuous filament winding

*(3)* tape winding in conjunction with (1) or (2) above

*(4)* spray-up in conjunction with (1) or (2) above

It is possible to qualify more than one of the above variables in a single demonstration laminate, so long as that resulting laminating process shall routinely be employed to produce vessels to this Standard.

*(c)* Demonstration laminates shall have a Type I hand lay-up or spray-up liner over which the structural filament wound layer is applied. This liner shall exotherm and cool before the structural filament wound layer is applied.

*(d)* A minimum of one ply of 3/4 oz/sq ft chopped strand mat or an equivalent weight by the chopped



Copyright ASME International
Provided by IHS under license with ASME
No reproduction or networking permitted without license from IHS
Not for Resale

--`,,,`,,,-`-`,,`,,`,`,,`---

Copyright ASME International
Provided by IHS under license with ASME
No reproduction or networking permitted without license from IHS

Not for Resale

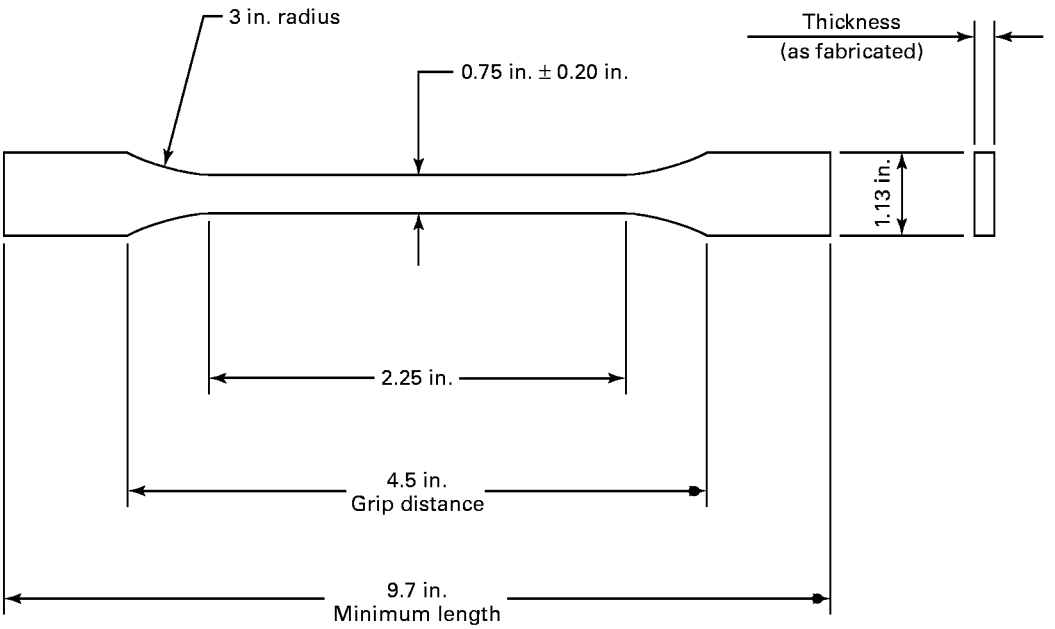


**FIG. 7-1 DIMENSIONS FOR TENSILE TEST SPECIMEN**

must be cut parallel to the edge of the laminate and the procedure must not chip, tear, or degrade the specimens. Type II test specimens shall be cut parallel to the labeled warp strand edge. The thickness of the specimens shall be the full thickness of the laminate and must not be machined on the inner or outer surfaces. Both hoop and axial test coupons are required for anisotropic laminates.

*(3)* Test specimens shall be machined to the dimensions shown in Fig. 7-1.

*(4)* The testing report shall include the following data and shall state compliance or nonconformance with the requirements of this Standard (see para. 7-700):

*(a)* testing speed, in./min

*(b)* width and thickness of each specimen, in.

*(c)* peak load for each specimen, lb

*(d)* tensile strength of each specimen, psi

*(e)* tensile modulus of elasticity of each specimen, psi

*(f)* average tensile strength, psi

*(g)* average tensile modulus, psi

*(d) Glass Content and Reinforcing Sequence*

*(1)* The glass content weight percent shall be determined by the method given in ASTM D 2584.

*(2)* A 1 in. wide strip shall be cut from the demonstration laminate. This strip shall be cut into three 1 in. long specimens.

*(3)* The testing report shall include the following data and shall state compliance or nonconformance with the requirements of this Standard (see para. 7-700):

*(a)* pyrolysis temperature

*(b)* specimen weight before ignition, g

*(c)* weight of specimen plus crucible, before ignition and after ignition, g

*(d)* reinforcing sequence identification in the general form of Table 2A-2; report in drafting symbol style (by visual inspection). This identification is not required for Type I laminates. **(d)**

*(e)* ignition loss for each specimen, g

*(f)* resin content of each specimen and average, wt %

*(g)* glass content of each specimen and average, wt %



Copyright ASME International
Provided by IHS under license with ASME
No reproduction or networking permitted without license from IHS
Not for Resale

# PART 8
# ACCREDITATION

## 8-100 SCOPE

Part 8 provides rules for accreditation of Fabricators of RTP vessels.

## 8-200 GENERAL

An accredited Fabricator is one who holds a valid ASME RTP-1 Certificate of Authorization.

The responsibilities set forth herein relate only to compliance with this Standard and are not to be construed as involving contractual or legal liabilities.

## 8-210 ASME RTP-1 Certificate of Authorization Holders

The ASME RTP-1 Certificate of Authorization holder is the Fabricator of an RTP vessel who certifies that the vessel complies with all requirements of this Standard.

## (00) 8-220 ASME RTP-1 Certificate of Authorization Holder's Responsibilities

*(a) Use of the Certificate and Symbol.* When authorization is granted, each applicant agrees to the following:

*(1)* the Certificate and the Symbol are at all times the property of ASME;

*(2)* they shall be used according to the rules and regulations of this Standard;

*(3)* they shall be promptly returned to ASME upon demand or when the applicant discontinues the scope of work covered by his or her Certificate.

*(b) Examples of the ASME RTP-1 Certificate Holder's Responsibilities.* Responsibilities include the following:

*(1)* obtaining an ASME RTP-1 Certificate in accordance with para. 8-400;

*(2)* compliance with this Standard;

*(3)* evaluation and approval of material manufacturers, and suppliers of parts and subcontracted services, in accordance with Appendix M-4;

*(4)* establishing and maintaining a Quality Control Program in accordance with Appendix M-4;

*(5)* filing of a Quality Control Manual in accordance with para. 8-220(f); and

*(6)* furnishing the User or User's Agent with the appropriate Fabricator's Data Report(s).

*(c) ASME RTP-1 Certificate of Authorization.* The holder of a Certificate of Authorization shall not permit any other party to use the Certificate or RTP Symbol issued to the holder.

*(d) Compliance With This Standard.* The ASME RTP-1 Certificate Holder shall fabricate vessels to be marked RTP in compliance with this Standard.

*(e) Subcontracting.* The Fabricator completing any vessel to be marked with the RTP Symbol has the responsibility of assuring that any work done by others complies with all the requirements of this Standard.

*(f) Filing of Quality Control Manual.* The ASME RTP-1 Certificate Holder shall file and maintain a copy of the ASME-accepted Quality Control Manual with ASME. If the Certificate Holder wishes to change the program to a degree requiring changes to the manual, the Certificate Holder shall submit the proposed changes to ASME, which shall accept or reject them in writing.

## 8-300 ACCREDITATION FOR ASME RTP-1 FABRICATORS

## 8-310 General

When requested by the applicant on forms designated by ASME, ASME will arrange for an evaluation of the applicant's Quality Control Program and shop qualifications. Forms may be obtained by request to Codes and Standards Conformity Assessment, The American Society of Mechanical Engineers. Three Park Avenue, New York, NY 10016-5990.

## 8-320 Evaluation of the Quality Control Program

*(a)* The evaluation consists of the following:

*(1)* evaluation of the applicant's Quality Control Manual and capability of implementation; and

*(2)* evaluation of the applicant's implementation



Copyright ASME International
Provided by IHS under license with ASME
No reproduction or networking permitted without license from IHS

Not for Resale

## M2D-200 APPARATUS

The following apparatus is required:

(d) *(a)* viscometer suitable for measuring Brookfield viscosity (calibrated via manufacturer's directions)

*(b)* 250 ml polypropylene beakers

*(c)* constant temperature water bath at 25°C ±0.1°C

*(d)* thermometer (ASTM No. 17C)

*(e)* stainless steel spatula

*(f)* timer, reading in 0.1 min

## M2D-300 PROCEDURE FOR TEMPERATURE ADJUSTMENT

*(a)* Fill beaker with material to be tested.

*(b)* Immerse covered beaker in agitated 25°C water bath and allow to come to temperature, 25°C ±0.1°C. The temperature adjustment may be hastened by spatula agitation of the sample (avoid air entrapment).

*(c)* Check temperature using Saybolt thermometer.

## M2D-400 PROCEDURE FOR THIXOTROPIC RESINS

*(a)* Agitate the resin with a spatula for 1 min at a rate of 120 RPM without entrapment of air, replace cover on beaker, allow to stand for 5 min ±0.1 min.

*(b)* Level Brookfield viscometer, attach spindle and guard as designated by resin manufacturer.

*(c)* Remove beaker from bath, place open beaker in position under Brookfield viscometer, center and immerse spindle to middle of the notch.

*(d)* Set speed to 6 RPM, start Brookfield viscometer and timer. After 1 min, increase speed to 60 RPM. At 2 min on timer, stop viscometer and read. Reduce speed to 6 RPM and take final reading 1 min after restarting. Record the 60 RPM and 6 RPM values.

*(e)* Repeat steps (a) through (d) above for second reading at each spindle speed.

## M2D-500 PROCEDURE FOR NONTHIXOTROPIC RESINS

*(a)* Level Brookfield viscometer, attach spindle and guard as designated by resin manufacturer.

*(b)* Remove beaker from bath, place open beaker in position under Brookfield viscometer, center and immerse spindle to middle of the notch.

*(c)* Run viscosity at 60 RPM for 1 min with a spindle chosen so that the Brookfield pointer falls approximately in the midrange of the recording dial. Alternatively, run at RPM and spindle recommended by resin manufacturer. Record the value.

*(d)* Repeat steps (a) through (c) above for second result. (00)

## M2D-600 CALCULATIONS

*(a)* Determine viscosity by multiplying the values obtained in paras. M2D-400 and M2D-500 with the Brookfield constant for the particular spindle number and RPM used to obtain the value.

*(b)* If the two results for a particular spindle and speed do not agree within ±50 centipoise, repeat the test.

*(c)* Determine thixotropic index as viscosity at 6 RPM divided by viscosity at 60 RPM.

## M2D-700 REPORT

Report the following on the Resin Log Sheet, Table M2F-1:

*(a)* Brookfield viscometer spindle and speed;

*(b)* viscosity in centipoise at 25°C average of two trials at both 6 RPM and 60 RPM.

# ARTICLE E
# ROOM TEMPERATURE GEL TIME

## M2E-100 INTRODUCTION

This Article specifies the procedure that shall be used to determine the room temperature (25°C) gel time of resins that have been properly mixed with correctly proportioned amounts of accelerator, promoter, and peroxide curing agents.

## M2E-200 APPARATUS

The following apparatus is required:

*(a)* constant temperature water bath at 25°C ±0.1°C

*(b)* polypropylene graduated beaker, 250 ml

*(c)* stainless steel spatulas

*(d)* laboratory timer, calibrated in units of 0.1 min

*(e)* laboratory balance (0.1 g sensitivity)

*(f)* graduated syringes, delivery 0.1 ml to 3.0 ml ±0.01 ml

*(g)* thermometer (ASTM No. 17C)

## M2E-300 PROCEDURE

*(a)* Place 100 g of resin to be tested into a clean



Copyright ASME International
Provided by IHS under license with ASME
No reproduction or networking permitted without license from IHS
Not for Resale

250 ml polypropylene beaker. Place charged beaker in the constant temperature bath previously set at 25°C ±0.1°C for a minimum of 20 min until the resin in the beaker is stabilized throughout at 25°C ±0.5°C.

*(b)* Add controlled promoters and/or accelerators individually, stirring with the metal spatula between each addition until they are thoroughly dispersed (1 min for each addition). The quantities and precision of amounts are to be as specified by the resin supplier.

NOTE: It is recommended that wooden tongue depressors not be used, since they will absorb curing components and may also leach undesirable contaminants into the resin solution.

*(c)* After addition of the promoters and accelerators, allow the resin to rest in the control temperature bath. When enough of the entrapped air from stirring has left the sample to allow visual examination, check the sample for good dispersion, particularly of cobalt additives. Any signs of striations or strings of the cobalt will require remixing.

(d) *(d)* Add the required concentration of the peroxide catalyst and mix vigorously with a clean metal spatula for 1 min. Start the timer simultaneously with the start of mixing.

**WARNING: Peroxides will react violently if placed in direct contact with metallic promoters or organic accelerators. Extreme care must be taken to avoid this. Refer carefully to peroxide manufacturer's instructions for safe handling of these materials.**

*(e)* Return the polypropylene beaker with the remaining resin to the constant temperature bath. Periodically probe the resin solution with the spatula until such time that the resin turns very thick and will "snap" or break evenly when the probe is lifted from the resin. When the snap occurs, stop the timer and record the time lapse as "gel time."

### M2E-400 REPORT

Record the room temperature (25°C) gel time on the Resin Log Sheet, Table M2F-1.

## ARTICLE F
## RESIN AND CURING AGENTS LOG SHEETS

See Tables M2F-1 and M2F-2 for the Resin and Curing Agents Log Sheets.

## ARTICLE G
## COMMON ADDITIVES

### M2G-100 INTRODUCTION

This Article specifies the minimum inspections by the Fabricator that must be performed prior to the acceptance and use of any of the common additives in the resin.

### M2G-200 DEFINITION AND LIMITS

#### M2G-210 Thixotropic Agents

Thixotropic agents are flame-processed silicon dioxides that are used to adjust the resin flow characteristics. The laminating resin shall contain *not* more than 1.5 parts per 100 parts resin by weight.

#### M2G-220 Flame Retardant Synergists

Flame retardant synergists are antimony oxides that are added to halogenated resins to enhance their measured flame retardant characteristics when measured per ASTM E 84. The laminating resin shall not contain more than 5 parts antimony oxide per 100 parts resin by weight. When predispersed concentrates are used, the laminating resin shall contain not more than 5 parts active antimony oxide by weight. No more than 10 parts of the predispersed concentrate per 100 parts resin by weight is permissible.

#### M2G-230 Ultraviolet Light Absorbers

Ultraviolet light absorbers are organic compounds that, by converting photochemical energy to thermal energy, effectively stabilize resin binders against the deteriorating effects of ultraviolet light. Only the outer surface resin-rich layer may contain the ultraviolet light absorber.

#### M2G-240 Pigments

Pigments are compounds that provide coloration and/or opacity. Only the outer surface resin-rich layer may contain pigment.

### M2G-300 ACCEPTANCE INSPECTION

*(a)* The package for each of the common additives shall be inspected at the time of delivery. Acceptance requirements are defined in para. M2G-400.

*(b)* The form shown in Table M2G-1, or a similar



Copyright ASME International
Provided by IHS under license with ASME
No reproduction or networking permitted without license from IHS
Not for Resale

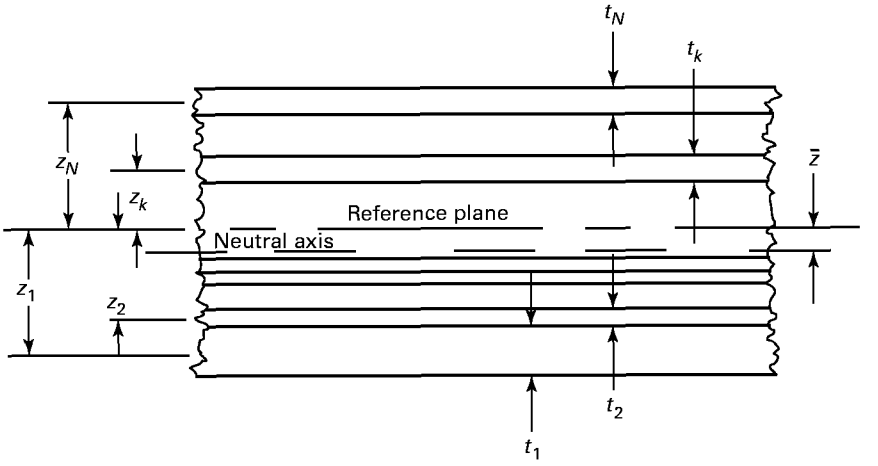


**FIG. M3-16 GEOMETRY OF AN *n*-LAYERED LAMINATE**

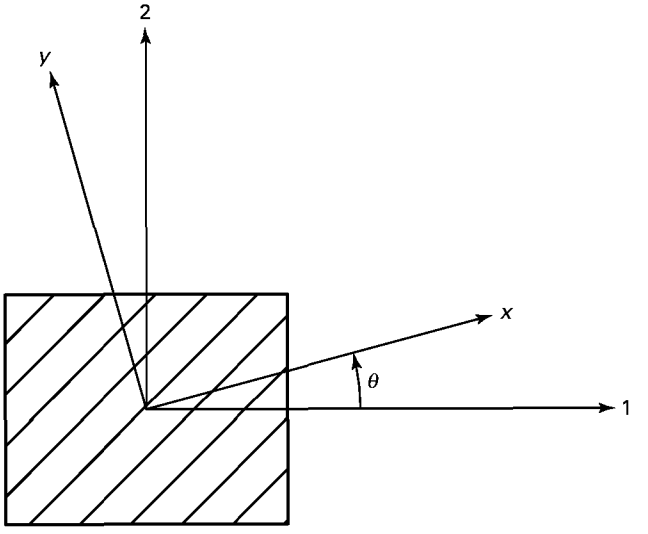


**FIG. M3-17 COORDINATE SYSTEMS**



Copyright ASME International
Provided by IHS under license with ASME
No reproduction or networking permitted without license from IHS
Not for Resale

# MANDATORY APPENDIX M-4
# QUALITY CONTROL PROGRAM

## M4-100 GENERAL

*(a)* The Fabricator shall have and maintain a Quality Control Program that will assure that all of the requirements of this Standard and any other applicable documents, as agreed between the Fabricator and the User, will be met.

(d) *(b)* The Fabricator must maintain a program suitable for the scope and detail of the work performed, and the size and complexity of the Fabricator's organization, and must designate a Certified Individual. See para. 1-400. A written description of the program shall be available for review.

*(c)* A copy of the Fabricator's Quality Control Manual shall be made available to the Inspector on request. The Fabricator's Quality Control Manual may contain proprietary information and procedures. No copies of the Fabricator's Quality Control Manual shall be removed from the Fabricator's premises without the Fabricator's express permission. This security permission does not apply to quality control forms and checklists which may be a portion of the Quality Control Manual and are necessary to be used during fabrication to check the fabrication process. These quality control forms become attachments to the Fabricator's Data Report (see Table 1-2).

## M4-200 ORGANIZATION

The Quality Control Program shall include the Fabricator's organization chart, which indicates reporting responsibility and authority. The purpose of this chart is to identify and associate the various organizational groups with the particular function for which they are responsible. The organization chart showing the relationship between management and engineering, purchasing, fabrication, inspection, and quality control is required to reflect the actual organization. This Standard does not intend to encroach on the Fabricator's right to establish, and to alter, whatever form of organization the Fabricator desires, as long as it is appropriate to fulfill the work within this Standard. This chart must illustrate that the quality control function is independent of the production group and marketing group.

## M4-300 DOCUMENTATION

*(a)* The Quality Control Program shall include as a minimum the documentation required by this Standard. These documents must be organized in one place and readily available while fabrication is in progress.

*(b)* The Quality Control Program shall provide for incorporation of procedures that will ensure that the latest applicable drawings, design calculations, specifications, and any Addenda to this Standard are used for fabrication, inspection, and testing.

*(c)* Documentation must be retained by the Fabricator for a minimum of 5 years.

## M4-400 QUALITY CONTROL

The Quality Control Program must include specific procedures for the following.

*(a)* Inspection of received goods, including raw materials and purchased items, i.e., any materials that will become part of the finished vessel.

*(b)* In-process inspection of resin mixing, raw material dispersion, component fabrication, and assembly procedures, including verification of reinforcing sequence (refer to Parts 4 and 6 of this Standard).

*(c)* Scheduling and notification for Inspector's hold points and final acceptance inspection. Refer to paras. 6-300, 1-400, 1-430, and 1-440. Typical inspection events are given in Tables NM7-1 and NM7-2.

*(d)* Inspection of the finished vessel (refer to Parts 4 and 6).

*(e)* Rectifying nonconformities or imperfections, which must be done in accordance with Appendix M-7 and must be recorded on forms included in the Fabricator's Quality Control Program. Minimum data to be recorded shall be date of correction, specific location on the vessel, description of nonconformity or imperfection, method of correction, name of qualified Laminator or Secondary Bonder who made the correction, and signature approvals for each correction in accordance with Appendix M-7 and the Fabricator's Quality Control Program.



Copyright ASME International
Provided by IHS under license with ASME
No reproduction or networking permitted without license from IHS

Not for Resale

*(f)* Maintenance and calibration of all inspection and test equipment.

**(b)** *(g)* Internal audits of the Quality Control Program. The Certified Individual shall perform the internal audits at the frequency specified in the QC Manual. The maximum interval between audits shall be 14 months (although 6 month intervals are recommended). The first audit must occur no more than 1 year from the date of issuance of the Certificate of Authorization.

*(h)* Assurance that the RTP-1 nameplate information meets the requirements of the UBRS and para. 1-540.

## M4-500 EXAMPLE OF A FABRICATOR'S QUALITY CONTROL PROGRAM

An example of a Fabricator's Quality Control Program is included in Appendix NM-6.



Copyright ASME International
Provided by IHS under license with ASME
No reproduction or networking permitted without license from IHS
Not for Resale

# MANDATORY APPENDIX M-5
# QUALIFICATION OF LAMINATORS AND SECONDARY BONDERS

## M5-100 GENERAL REQUIREMENTS

*(a)* This Appendix specifies the rules for qualifying personnel to produce laminates and/or perform secondary bonding operations. Laminates and overlays thereof (secondary bonds) shall only be made by personnel who have been qualified in accordance with the rules of this Appendix.

*(b)* A *Laminator* is an individual who makes laminates. This is not to preclude assistance being provided to the Laminator by one to four assistants.

*(c)* A *Secondary Bonder* is an individual who joins and overlays cured subassemblies of the vessel being fabricated. This is not to preclude assistance being provided to the Secondary Bonder by one or two assistants.

*(d)* The Fabricator shall maintain up-to-date records relating to qualification of each Laminator and Secondary Bonder. These records will document the date of last qualification, and will include all calculations and test or inspection reports from both internal and independent laboratory testing programs used in the process of qualification. These records are subject to review on request by all parties engaged in the process of procurement or inspection.

## M5-200 RESPONSIBILITY

It is the responsibility of the Fabricator to train and qualify Laminators and Secondary Bonders.

## M5-300 QUALIFICATION OF LAMINATORS

*(a)* Laminators may qualify their capabilities at the time a Fabricator produces a demonstration laminate for the purpose of shop qualification.

(00) *(b)* To qualify, a Laminator must produce one Type II demonstration laminate (see Part 7), fabricated of any polyester or vinyl ester resin, which upon test in accordance with the instructions in Part 7 fulfills the requirements of this Standard. A Laminator Qualification Report, Table M5-1, shall be completed and signed for each laminator qualification.

*(c)* All laminates made for qualification shall be identified in accordance with para. 7-900.

*(d)* Laminators shall be requalified if inactive for 6 months. (d)

*(e)* The Certified Individual may require requalification of a Laminator at any time if there is cause to question the Laminator's ability to produce laminates in accordance with the requirements of this Standard.

## M5-400 QUALIFICATION OF SECONDARY BONDERS

*(a)* Secondary Bonders must qualify their capabilities in accordance with the procedures that follow.

*(b)* It is the responsibility of the Fabricator's Quality Control Manager to:

*(1)* insure compliance with procedures as outlined for the preparation and machining of test samples;

*(2)* make or supervise the making of circumference measurements;

*(3)* make, sign, and date a Secondary Bonder Qualification Report; see Table M5-2. Attached to the Secondary Bonder Qualification Report shall be copies of a Component Data Sheet, including all items listed in Table NM6-2. Two Component Data Sheets are required, one for the pipe test piece, the second for the overlay. The Component Data Sheets shall be appropriately identified.

### M5-410 Making Pipe Test Pieces

*(a)* Three pipe test pieces shall be made by a qualified Laminator utilizing brightly pigmented polyester or vinyl ester resin.

*(b)* The resin must be one that the Fabricator has qualified through the production of a demonstration laminate.

*(c)* Refer to Fig. M5-1 for dimensions of pipe test pieces.

*(d)* The Laminator shall apply a nonpigmented, paraffinated top coat to the pipe exterior.

*(e)* After lamination, application of paraffinated top coat, and cure, the pipe test pieces must be aged at



Copyright ASME International
Provided by IHS under license with ASME
No reproduction or networking permitted without license from IHS
Not for Resale

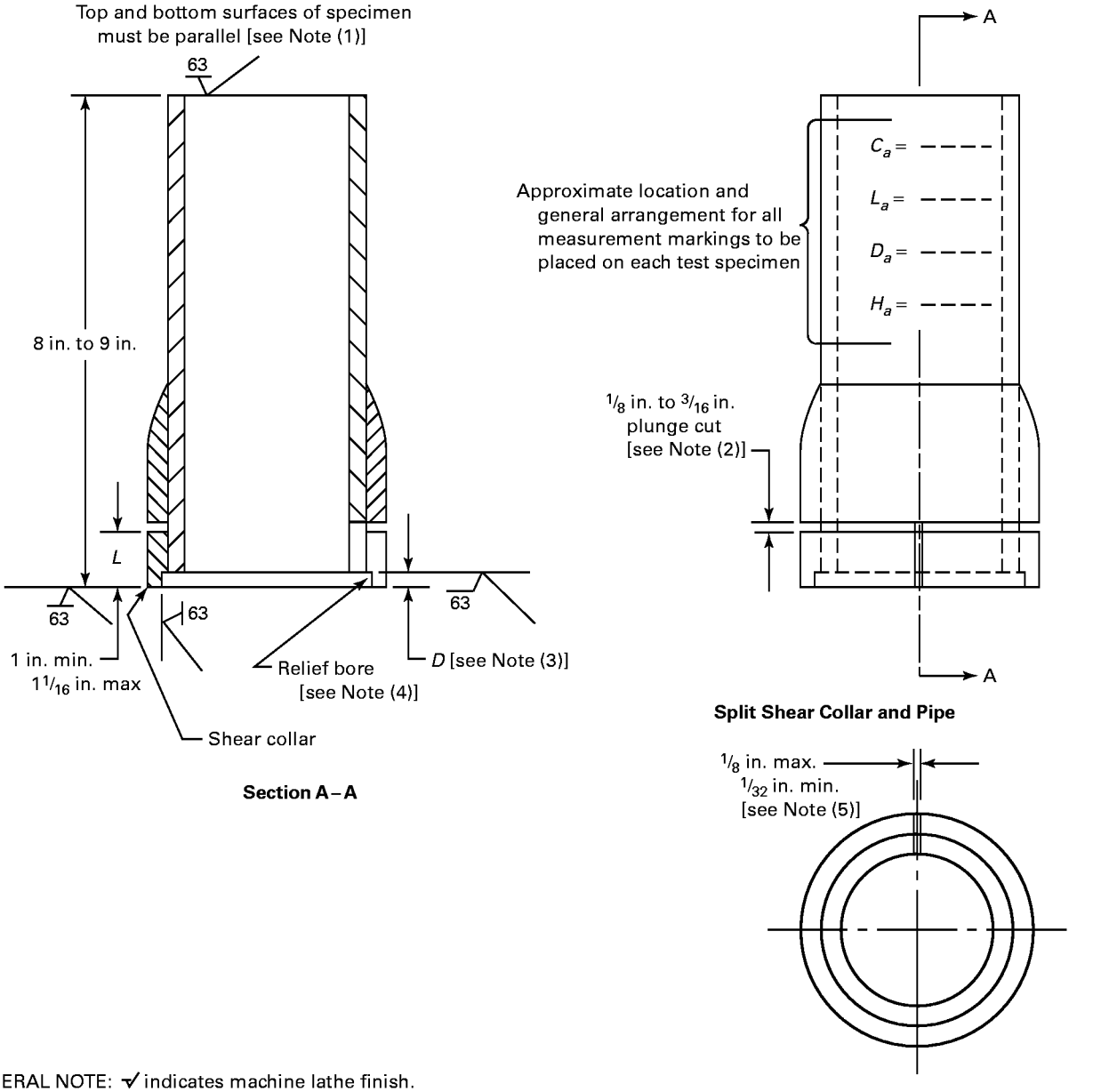


GENERAL NOTE: ✓ indicates machine lathe finish.

NOTES:
(1) Lack of parallelism may reduce test values.
(2) Plunge cut with squared nose parting tool to depth sufficient to expose pigmented laminate a full 360 deg and over total surface of root of slot.
(3) Machine back pipe 1/4 in. minimum to 5/16 in. maximum.
(4) Machine away internal surface of shear collar to be outboard of pipe external surface 3/32 in. minimum, a full 360 deg.
(5) Slit must extend completely through the wall of the shear collar (and pipe) and be of length sufficient to protrude fully into the plunge cut slot.

**FIG. M5-3 SECONDARY BOND TEST SPECIMEN**



Copyright ASME International
Provided by IHS under license with ASME
No reproduction or networking permitted without license from IHS
Not for Resale

*(f)* Peak load $P$ is to be recorded for each specimen, rounded off to the nearest 200 lb.

*(g)* Secondary bond shear strength $S_B$ is to be calculated for each test specimen as follows:

$$S_B = \frac{P}{C_a \times H_a}, \text{ lb/in.}^2$$

where

$C_a$ = average circumference of test specimen, in.
$H_a$ = average engagement height, in.
$P$ = peak load at failure, lb

*(h)* The independent testing laboratory shall calculate and report the values of secondary bond shear strength for each test specimen tested.

## M5-450 Requirements for Qualification of Secondary Bonders

*(a)* The secondary bond shear strength of all specimens tested must be greater than or equal to 2,000 psi. Should any sample tested fail to achieve a secondary bond shear strength of 2,000 psi, a complete lot of six new samples must be made and five of these tested, so that all five retest samples achieve 2,000 psi minimum shear value.

*(b)* Secondary Bonders shall be requalified if inactive for 6 months. **(d)**

*(c)* The Certified Individual may require requalification of a Secondary Bonder at any time if there is cause to question the Secondary Bonder's ability to produce secondary bonds in accordance with the requirements of this Standard.



Copyright ASME International
Provided by IHS under license with ASME
No reproduction or networking permitted without license from IHS
Not for Resale

# NONMANDATORY APPENDIX NM-10 (d)
# REQUIREMENTS AND RESPONSIBILITIES OF USER (OR USER'S AGENT), FABRICATOR, INSPECTOR, AND CERTIFIED INDIVIDUAL

## NM10-100 SCOPE AND PURPOSE

(d) *(a)* The purpose of this Appendix is to provide a convenient reference to the major responsibilities and requirements as defined by this Standard for Users, Fabricators, Inspectors, and Certified Individuals. See Fig. NM10-1 for an RTP-1 flowchart.

*(b)* Whereas a summary statement of each requirement or responsibility is provided, the full text of each referenced paragraph provides details that are essential to proper understanding.

*(c)* Any omissions (possibly due to revisions, addenda, oversight, etc.) do not relieve any party from full responsibility for compliance with all requirements contained in the text of the Standard and addenda.

## NM10-200 USER (OR USER'S AGENT)

The *User* (or *User's Agent*) is the organization for which the equipment is being fabricated.

| Paragraph | Requirements and Responsibilities (A Summary Statement) |
|---|---|
| 1-200 | Provide UBRS (Table 1-1). Must specify the resin to be used or thoroughly define the chemical environment of the vessel. |
| 1-210 | Specify if the service is critical |
| 1-220 | Specify whether AE testing or postcuring is required. Consider and define special safeguards for the installation and operation of critical service vessels. |
| 1-400 | With the Fabricator, select the Inspector prior to start of fabrication |
| 1-530 | Designate the nameplate location prior to the approval of Fabricator's drawings |
| 2-310 | Specify the resin, the use of thixotropic agents, and/or fire-retardant synergists |
| 2A-224 | Specify use of exterior veil, ultraviolet protection, or pigmentation, if required |
| 3-100 | If desired, specify option of design methodology (Subpart 3A, Subpart 3B, or both) |
| 3A-600 | Select attachment materials |
| 5-200 | Specify and install overpressure protection device(s) |
| 6-100 | Specify inspections beyond those required by this Standard |
| 6-940(d) | When exterior pigmentation or insulation is specified, agree on visual inspection methods and arrange for a proper schedule |
| 6-950(c) | Prior to the start of fabrication, establish the pressure to be used if a vacuum test is required |
| NM3-100 | Specify the code to be used for seismic, wind, and snow loads |
| NM7-100 | Establish the acceptance criteria for inspection to any special User requirements |
| NM7-400(d) | Reference dimensional tolerance from Fig. NM7-4 in the purchase contract or UBRS if these tolerances are to govern the fabrication |
| NM7-500 | Consult with the Fabricator about quantity limitations on gaseous bubbles or blisters and agree on any limitations to be included in the purchase specifications |
| App. NM-9 | Ensure that the shipping, rigging, storing, and installation instructions are followed. |

## NM10-300 FABRICATOR

The *Fabricator* is the producer of RTP equipment. The Fabricator combines resin and reinforcing fibers to produce the final product.

| Paragraph | Requirements and Responsibilities (A Summary Statement) |
|---|---|
| 1-300 | Prepare the Fabricator's Design Report certified by a Professional Engineer |
| 1-440 | Provide plant access for the Inspector. Coordinate fabrication progress and inspection schedules with the Inspector. |
| 1-520 | Complete certification of compliance to the Standard. Complete Fabricator's Data Report. |
| Subparts 2A–2C | Develop design basis laminates |
| 6-300(a)–(h) | Prepare a written Quality Control Manual. Provide all documents to the Inspector as required. Assist the Inspector by providing all necessary tools, test equipment, manpower, etc. |
| 6-400 | Assure that the vessel is in proper entry condition for inspection |
| 6-900(a), (c) | Provide final inspection documents to the Inspector |
| 6-910(a), (c) | Make all necessary checks to assure proper resin cure |
| 6-920(a) | Verify dimensions and laminate thickness |



Copyright ASME International
Provided by IHS under license with ASME
No reproduction or networking permitted without license from IHS
Not for Resale

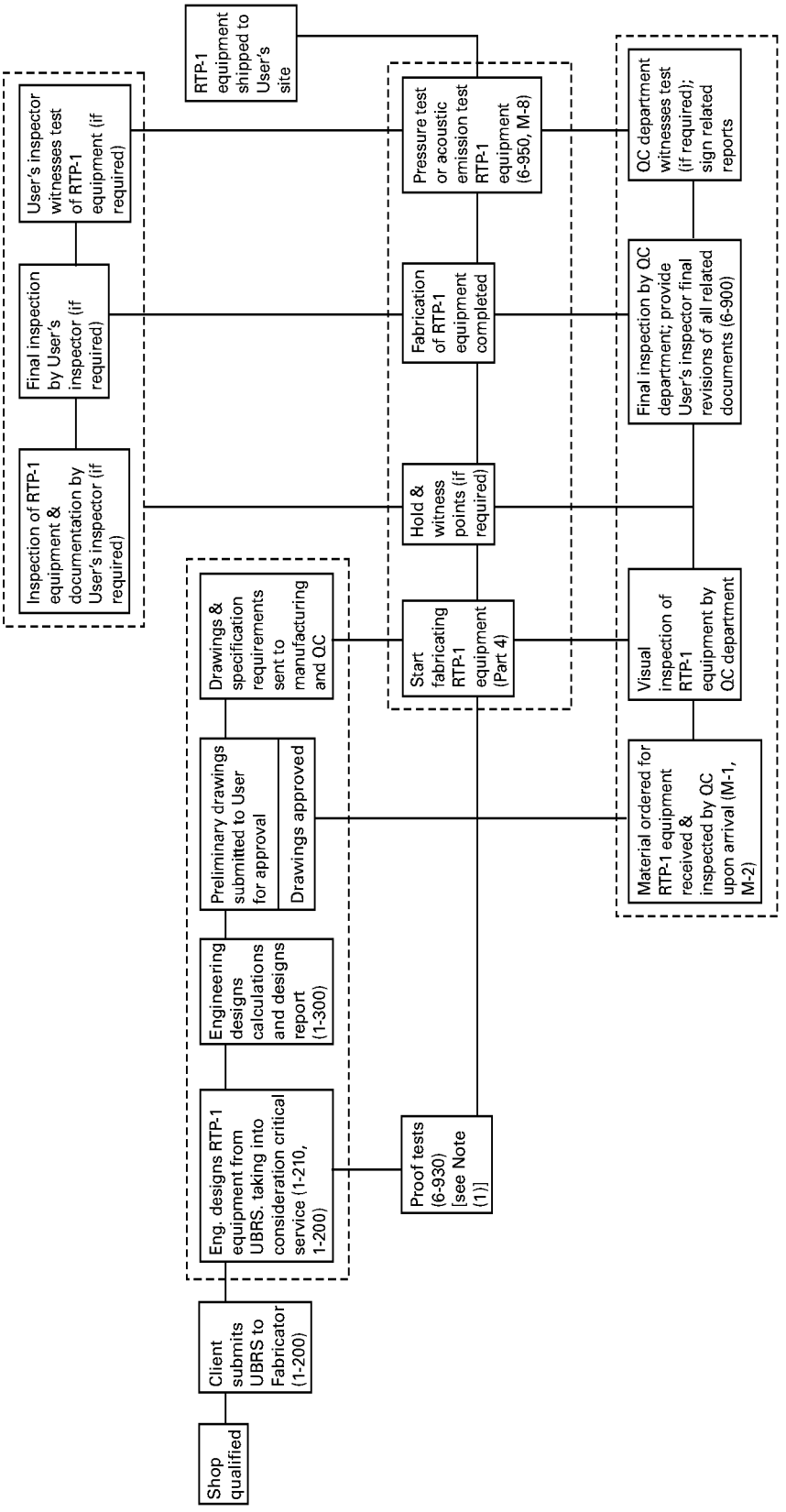


GENERAL NOTES:
(a) Should equipment require repairs during fabrication, repairs shall be performed in accordance with Appendix M-7 (Repair Procedures).
(b) Copies of the original Data Reports shall be sent to the User (or the User's agent).

NOTE:
(1) Proof tests are mandatory for all vessels built to the RTP-1 Standard having an internal or external design pressure equal to or exceeding 2 psig.

**FIG. NM10-1 RTP-1 FLOWCHART**



Copyright ASME International
Provided by IHS under license with ASME
No reproduction or networking permitted without license from IHS

Not for Resale

| | |
|---|---|
| 6-930(a), (b), (d) | Assure laminate mechanical properties and laminate reinforcement content and sequence are in accordance with design. Proof test laminates when required by para. 6-930(d) (based on design pressure). |
| 6-940 | Make all checks necessary to assure that laminate imperfections are within the requirements of this Standard |
| 6-950(a)–(e) | Perform pressure tests |
| 7-100 | Meet all requirements as outlined in this Standard for shop qualification |
| App. M-1, Articles A–D | Perform inspection and test for reinforcement materials received |
| App. M-2, Articles A–E | Perform inspection and tests on resins and curing agents |
| App. M-2, Article G | Perform inspection on common additives |
| M4-100 | Prepare and maintain a Quality Control Program |
| M5-200 | Train and qualify Laminators and Secondary Bonders |
| M6-100 | Design, fabricate, and test a demonstration vessel |
| App. M-7 | Develop repair procedures in accordance with requirements in that Appendix. Correct all nonconformities in vessels. |
| NM7-300 | Comply with all special purchase order requirements, specifications, instructions, or drawings |

## NM10-400 INSPECTOR

*Inspector* (with upper case "I") is defined in para. 1-400.

| Paragraph | Requirements and Responsibilities (A Summary Statement) |
|---|---|
| 1-430 | Verify that requirements of this Standard have been met and that design has been reviewed and certified by a Professional Engineer. Perform all specific inspections as required by this Standard. |
| 1-440 | Make arrangements with the Fabricator for timely inspections |
| 1-520(c) | Sign Fabricator's Data Report (or Partial Data Report) |
| 6-300(b), (e) | Inspect any subassemblies or components fabricated by a Subcontractor of the Fabricator. Verify that the Fabricator's Quality Control Program is in effective operation. Make such specific inspections and tests as are required by this Standard; provide a complete report including all data as required in paras. 6-910 through 6-960. |
| 6-300(i) | Sign the Certificate of Inspection on the Fabricator's Data Report |
| 6-500 | Examine Fabricator's design record and report. Verify that the vessel conforms to the latest revision of approved drawings and the UBRS. Verify that the Fabricator's Design Report has been certified by a registered Professional Engineer. |
| 6-600 | Verify that the materials used in fabrication comply with the requirements of this Standard and the UBRS |
| 6-700 | Establish hold points and verify fabrication. At completion of each hold point, Inspector shall report results and highlight any discrepancies requiring corrective action. |
| 6-900(a) | Review the final revision of documents at the time of final inspection |
| 6-900(d) | Summarize inspection in a brief report and submit the report to the Fabricator |
| 6-900(e) | Sign and date the Certificate of Compliance |
| 6-910(b), (d) | Verify proper use, formulation, and cure of resin (hardness and acetone) |
| 6-920 | Verify thickness and dimensional data |
| 6-930 | Verify reinforcing sequence either by visual or by burnout tests as required. Review Proof Tests data and verify that it meets the requirements as stated therein. |
| 6-940 | Ascertain the proper Visual Inspection Level of the laminate and conduct the visual inspection |
| 7-500(c) | Verify that the Fabricator's record keeping system satisfies the requirements of this Standard |
| M5-300(e) | Require requalification of Laminator(s) if ability becomes questionable |
| M5-450(c) | Require requalification of Secondary Bonder(s) if ability becomes questionable |
| M7-210(c) | Review and approve all repair procedures in advance |
| M7-210(f) | Reinspect all repairs to ensure compliance with this Standard |
| M8-200(c) | Witness acoustic emission test (if required) and verify the acoustic emission examination report |

## NM10-500 CERTIFIED INDIVIDUAL (d)

*Certified Individual (CI)* is defined in para. 1-400.

| Paragraph | Requirements and Responsibilities (A Summary Statement) |
|---|---|
| 1-400 | Protect the ASME mark by carrying out the duties described in this Standard |
| 1-410(a) | Perform an annual audit to verify that the Fabricator's Quality Assurance System is current and in effective operation |
| 1-410(b) | Verify that the qualifications of the Inspector and inspector are in accordance with the Fabricator's Quality Assurance System |
| 1-410(c) | Verify that corrective actions resulting from ASME audits are properly resolved |
| 1-410(d) | Verify that corrective actions taken to resolve vessel nonconformities are in accordance with the Fabricator's Quality Assurance Program |
| 1-410(e) | Verify that the responsibilities and activities of the Inspector are in accordance with the requirements of the Standard |
| 1-410(f) | Verify that vessels are manufactured by qualified Laminators and Secondary Bonders |
| 1-410(g) | Sign the Fabricator's Partial Data Report subsequent to completion of all inspections by the Inspector, in the case that only components are being produced |



Copyright ASME International
Provided by IHS under license with ASME
No reproduction or networking permitted without license from IHS Not for Resale

| | |
|---|---|
| 1-410(h) | Approve the application of the ASME mark by signing the Fabricator's Certificate of Compliance on the Fabricator's Data Report subsequent to completion of all inspections by the Inspector |
| 1-420(a) | Have a minimum of a high school diploma and 5 years' experience in the RTP corrosion resistance industry |
| 1-420(b) | Demonstrate inspection ability to the Fabricator employing him/her |
| 1-420(c) | Have satisfactory expertise and experience according to the complexity of the assignment |
| 1-420(d) | Have knowledge of RTP-1 |
| 1-420(e) | Have knowledge of the Fabricator's Quality Assurance Program and shop procedure |
| 1-420(f) | Have the knowledge and ability to evaluate and monitor procedures and performance |
| 1-420(g) | Have knowledge of keeping and maintaining records |
| 1-520(b) | Complete and sign the Fabricator's Data Report or Fabricator's Partial Data Report, as applicable |
| 6-300(i) | Sign the Inspector's Certification on the Fabricator's Data Report when he/she is satisfied that all requirements of the Standard have been met |
| M5-300(e) | Require requalification of a Laminator if his/her ability becomes questionable |
| M5-450(c) | Require requalification of a Secondary Bonder if his/her ability becomes questionable |



--`,,`,,`-`-`,,`,,`,`,,`---

Copyright ASME International
Provided by IHS under license with ASME
No reproduction or networking permitted without license from IHS

Not for Resale

# NONMANDATORY APPENDIX NM-11
# DESIGN FOR 250 lb CONCENTRATED LOAD ON A TORISPHERICAL HEAD

## NM11-100 SCOPE

This Appendix provides a procedure for calculating the thickness of a torispherical top head that satisfies para. 3A-340. The procedure is limited to heads that satisfy para. 3A-230, and whose inside diameter is not more than 144 in. The inside diameter of a torispherical head is defined as the inside diameter of the cylindrical shell to which it is attached.

## NM11-200 NOMENCLATURE

The following symbols are used in the equations for calculating the stress in the head:

$F$ = design factor
$G$ = stress function, lb
$P$ = design pressure, psi (the sign of $P$ is positive if the design pressure is internal and negative if the design pressure is external)
$R$ = inside radius of the crown of the head, in.
$S_u$ = ultimate tensile strength of the laminate, psi
$S_1$ = stress on the upper surface of the head, psi
$S_2$ = stress on the lower surface of the head, psi
$t$ = thickness of the crown, in.

## NM11-300 DESIGN FACTOR

If the 250 lb load is intermittent and temporary, the design factor $F=5$; otherwise, $F=10$.

## NM11-400 STRESS CALCULATIONS

*(a) Upper Surface.* The stress on the upper surface of the head is checked as follows:

*(1)* Calculate $(Rt)^{0.5}$.

*(2)* Enter Fig. NM11-1 with the value from subpara. (1) above and obtain a value for $G$ from the curve for the upper surface. The negative sign denotes that the stress is compressive.

*(3)* Calculate the stress $S_1 = G/t^2$.

*(4)* The absolute value of $S_1$ must be less than or equal to $S_u/F$.

*(5)* If the design pressure is external, the absolute value of the quantity $S_1 + PR/t$ must also be less than or equal to $S_u/F$.

*(6)* If either of the conditions in subpara. (4) or (5) above is violated, increase $t$ and repeat subparas. (1) through (5).

*(b) Lower Surface.* The stress on the lower surface may be checked as follows:

*(1)* Enter Fig. NM11-1 with the value of $(Rt)^{0.5}$ from subpara. (a)(1) above, and obtain a value for $G$ from the curve for the lower surface.

*(2)* Calculate the stress $S_2 = G/t^2$.

*(3)* $S_2$ must be less than or equal to $S_u/F$.

*(4)* If the design pressure is internal, the quantity $S_2 + PR/t$ must also be less than or equal to $S_u/F$.

*(5)* If either of the conditions in subpara. (3) or (4) above is violated, increase $t$ and repeat subparas. (1) through (4).



Copyright ASME International
Provided by IHS under license with ASME
No reproduction or networking permitted without license from IHS
Not for Resale

Copyright ASME International
Provided by IHS under license with ASME
No reproduction or networking permitted without license from IHS
Not for Resale

# ASME Services

ASME is committed to developing and delivering technical information. At ASME's Information Central, we make every effort to answer your questions and expedite your orders. Our representatives are ready to assist you in the following areas:

ASME Press
*Codes & Standards*
Credit Card Orders
IMechE Publications
Meetings & Conferences
Member Dues Status
Member Services & Benefits
Other ASME Programs
Payment Inquiries
Professional Development
Short Courses
Publications
Public Information
Self-Study Courses
Shipping Information
Subscriptions/Journals/Magazines
Symposia Volumes
Technical Papers

**How can you reach us? It's easier than ever!**

There are four options for making inquiries* or placing orders. Simply mail, phone, fax, or E-mail us and an Information Central representative will handle your request.

*Mail*
**ASME**
22 Law Drive, Box 2900
Fairfield, New Jersey
07007-2900

*Call Toll Free*
**US & Canada:** 800-THE-ASME
(800-843-2763)
**Mexico:** 95-800-THE-ASME
(95-800-843-2763)
**Universal:** 973-882-1167

*Fax—24 hours*
973-882-1717
973-882-5155

*E-Mail—24 hours*
Infocentral@asme.org

* Information Central staff are not permitted to answer inquiries about the technical content of this code or standard. Information as to whether or not technical inquiries are issued to this code or standard is shown on the copyright page. All technical inquiries must be submitted in writing to the staff secretary. Additional procedures for inquiries may be listed within.

--`,,,`,,,-`-`,,`,,`,`,,`---

Copyright ASME International
Provided by IHS under license with ASME
No reproduction or networking permitted without license from IHS

Not for Resale



J0127D

Copyright ASME International
Provided by IHS under license with ASME
No reproduction or networking permitted without license from IHS

Not for Resale

AN AMERICAN NATIONAL STANDARD

# ASME RTP-1c–2003

# ADDENDA

to

## ASME RTP-1–2000
## REINFORCED THERMOSET PLASTIC CORROSION RESISTANT EQUIPMENT

THE AMERICAN SOCIETY OF MECHANICAL ENGINEERS
Three Park Avenue • New York, NY 10016

--`,,,`,,,-`-`,,`,,`,`,,`---

Copyright ASME International
Provided by IHS under license with ASME
No reproduction or networking permitted without license from IHS

Not for Resale

Date of Issuance: December 31, 2003

ASME is the registered trademark of The American Society of Mechanical Engineers.

This code or standard was developed under procedures accredited as meeting the criteria for American National Standards. The Standards Committee that approved the code or standard was balanced to assure that individuals from competent and concerned interests have had an opportunity to participate. The proposed code or standard was made available for public review and comment that provides an opportunity for additional public input from industry, academia, regulatory agencies, and the public-at-large.

ASME does not "approve," "rate," or "endorse" any item, construction, proprietary device, or activity.

ASME does not take any position with respect to the validity of any patent rights asserted in connection with any items mentioned in this document, and does not undertake to insure anyone utilizing a standard against liability for infringement of any applicable letters patent, nor assume any such liability. Users of a code or standard are expressly advised that determination of the validity of any such patent rights, and the risk of infringement of such rights, is entirely their own responsibility.

Participation by federal agency representative(s) or person(s) affiliated with industry is not to be interpreted as government or industry endorsement of this code or standard.

ASME accepts responsibility for only those interpretations of this document issued in accordance with the established ASME procedures and policies, which precludes the issuance of interpretations by individuals.

No part of this document may be reproduced in any form,
in an electronic retrieval system or otherwise,
without the prior written permission of the publisher,
except as otherwise noted on forms contained in this document.

Copyright © 2003 by
THE AMERICAN SOCIETY OF MECHANICAL ENGINEERS
All rights reserved
Printed in U.S.A.

Copyright ASME International
Provided by IHS under license with ASME
No reproduction or networking permitted without license from IHS

Not for Resale

# ASME RTP-1c–2003

Following approval by the RTP Committee and ASME, and after public review, this ASME RTP-1c–2003 was approved by the American National Standards Institute on July 30, 2003.

Addenda to the 2000 edition of ASME RTP-1 are issued in the form of replacement pages. Revisions, additions, and deletions are incorporated directly into the affected pages. It is advisable, however, that this page, the Addenda title and copyright pages, and all replaced pages be retained for reference.

## SUMMARY OF CHANGES

This is the third Addenda to be published to ASME RTP-1–2000. The first Addenda was incorporated into the 2000 edition and the second Addenda was published on January 15, 2003.

Replace or insert the pages listed. Changes given below are identified on the pages by a margin note, **(c)**, placed next to the affected area. Revisions to the 2000 edition are indicated by **(00)**, and previous Addenda changes are indicated by **(a)** and **(b)**. The pages not listed are the reverse sides of the listed pages and contain no changes.

| *Page* | *Location* | *Change* |
|---|---|---|
| 9 | Table 1-1 | Items 5.1 and 5.2 revised |
| 18 | 2B-130(b) | Revised |
| 26 | 3A-500 | In fourth line, cross-reference corrected by errata |
| 48 | 5-200 | Second paragraph revised |
| 50, 51 | 6-300(i) | Revised |
| 61 | Table 7-1 | Entries in third column revised |
| 62–64 | 7-620(b) | (1) Subparagraphs (1)–(3) revised<br>(2) Subparagraphs (5)–(8) deleted |
| | 7-620(g) | Revised |
| | 7-700(b) | (1) Subparagraph (3) deleted<br>(2) Subparagraph (4) redesignated as (3) |
| 115 | Fig. M5-1 | Arrow pointing to centerline deleted by errata |
| 125 | Table M6-1 | Items 5.1 and 5.2 revised |
| 180 | Table M12G-1 | Items 5.1 and 5.2 revised |



Copyright ASME International
Provided by IHS under license with ASME
No reproduction or networking permitted without license from IHS
Not for Resale

## TABLE 1-1 USER'S BASIC REQUIREMENTS SPECIFICATION (UBRS) (CONT'D) (00)
## As Required by the Provisions of ASME RTP-1 (b)



RTP Edition No._____

UBRS Revision No._____

Wind/seismic/snow code (include edition or year) _____

Basic wind speed _____ MPH Classification category _____ Exposure _____

Elevation above grade_____ ft Topographic factors _____

Seismic zone _____ Site-specific seismic information (soil type, ground motion coefficients, etc.) _____

Snow load _____ psf

Capacities: Operating _____ gal Flooded _____

5.2 Mechanical agitator: [ ] Required [ ] Not required

Dead load _____ lb

Static bending moment _____ ft-lb

Dynamic bending moment _____ ft-lb

Torque _____ ft-lb

Horsepower _____ hp

Impeller speed _____ RPM Impeller diameter _____ in.

Number of impellers_____ Foot bearing: [ ] Yes [ ] No

5.3 Heating and cooling:

[ ] Electric panels

[ ] Steam coil

[ ] Steam sparger

[ ] Heat exchanger

[ ] Other _____

5.4 Mechanical and other forces:

[ ] Violent chemical reaction

[ ] Subsurface introduction of gas or vapor

[ ] Subsurface introduction of steam

[ ] Transmitted mechanical load/force

[ ] Impact due to introduction of solids

[ ] Vacuum from pump down (or vessel draining)

[ ] Vacuum from cool down

[ ] Other _____

5.5 Corrosion barrier excluded from structural calculations:

[ ] Yes

[ ] No

5.6 Declaration of *critical service* (only by User or User's Agent; refer to para. 1-210 of ASME RTP-1):

[ ] Yes

[ ] No

6. Designation of Inspector (Review paras. 1-400, 1-430, and 1-440 of ASME RTP-1. It must be recognized that ASME RTP-1 establishes numerous duties for the Inspector, which necessitates that the Inspector be present in the fabrication shop throughout a major portion of the fabrication interval.). Inspector shall be:

[ ] Fabricator's Quality Control principal

[ ] User's representative

[ ] Other



Copyright ASME International
Provided by IHS under license with ASME
No reproduction or networking permitted without license from IHS
Not for Resale

(00)

## TABLE 1-1 USER'S BASIC REQUIREMENTS SPECIFICATION (UBRS) (CONT'D)
## As Required by the Provisions of ASME RTP-1



RTP Edition No._____

UBRS Revision No._____

Inspector's name _____ Telephone _____

Company _____

Address _____

_____

6.1 Approval of Inspector designation

6.1.1 Authorized User's representative:

Name _____ Title _____

Signature _____ Date _____

6.1.2 Authorized Fabricator's representative:

Name _____ Title _____

Signature _____ Date _____

Additional requirements: _____

GENERAL NOTE: This form may be reproduced and used without written permission from ASME if used for purposes other than republication.



Copyright ASME International
Provided by IHS under license with ASME
No reproduction or networking permitted without license from IHS
Not for Resale

**TABLE 2A-3 MINIMUM VALUES OF FLAT LAMINATES** (b)

| Nominal Thickness, in. | Type | Ultimate Tensile Strength, psi [Note (1)] | Tensile Modulus, psi [Note (1)] | Ultimate Flexural Strength, psi [Note (2)] | Flexural Modulus, psi [Note (2)] |
|---|---|---|---|---|---|
| All | I | $9.0 \times 10^3$ | $1.00 \times 10^6$ | $16.0 \times 10^3$ | $0.70 \times 10^6$ |
| 0.22 | II | $12.0 \times 10^3$ | $1.30 \times 10^6$ | $19.0 \times 10^3$ | $0.80 \times 10^6$ |
| 0.29 | II | $13.5 \times 10^3$ | $1.40 \times 10^6$ | $20.0 \times 10^3$ | $0.90 \times 10^6$ |
| 0.37 and above | II | $15.0 \times 10^3$ | $1.50 \times 10^6$ | $22.0 \times 10^3$ | $1.00 \times 10^6$ |

GENERAL NOTE: The tabulated values remain unchanged up to 180°F. Above that temperature, measured properties may decrease.

NOTES:
(1) ASTM D 638 at 73°F or ASTM D 5083 at 73°F.
(2) ASTM D 790 at 73°F.

Type I, 0.48 in. nominal thickness
Type I, 0.74 in. nominal thickness
Type II, 0.22 in. nominal thickness
Type II, 0.49 in. nominal thickness
Type II, 0.76 in. nominal thickness

When the corrosion barrier is excluded from the design as a contributor to the structural strength of the laminate per para. 6-930(d)(5)(d), the following design basis laminates shall include only the structural layer:

Type I, 0.35 in. nominal thickness
Type II, 0.37 in. nominal thickness

Properties of each type shall be established on flat laminates prepared under shop conditions. For Type II laminates, the woven roving is laid-up in square array with warp rovings parallel layer to layer, and test specimens are cut parallel to the warp rovings.

*(b)* For design purposes, properties at 73°F are acceptable up to 180°F. Where laminates are fabricated for use at design temperatures above 180°F, certification of strength and modulus per paras. 2A-400(a) and (b) shall be supplied at or above the specified temperature.

(b) *(c)* The thickness and glass content of laminates shall be based on the data obtained from the Fabricator's design basis laminates. For laminate Types I and II, thickness and glass content shall be determined from laminates described in para. 2A-300(a)(2). Six thickness and glass content per unit area readings shall be taken on each design basis laminate. They shall be taken at 1 in. to 2 in. from each corner, except for two readings taken from the middle of the laminate. The highest thickness and glass content per unit area reading taken (of the six) must be no more than 115% of the lowest reading taken. The six readings shall be averaged to give the design basis laminate thickness and glass content for each laminate tested. The average thickness value shall be from 85% to 115% of the nominal thickness listed in Tables 2A-1 and 2A-2.

NOTE: *Glass content per unit area* means weight per unit area and is not a weight percent value.

*(d)* The laminate compositions and minimum properties for Type I production laminates are given in Tables 2A-1 and 2A-3.

*(e)* The laminate compositions and minimum properties for Type II production laminates are given in Tables 2A-2 and 2A-3.

NOTE: The laminate properties found in Table 2A-3 are conservative and historically proven. They represent a compilation of data on the most available laminating materials.

## 2A-400 TEST METHODS

*(a)* Tensile strength and tensile modulus of elasticity shall be determined by ASTM D 638 or ASTM D 5083. The tensile modulus shall be determined using the data between 400 and 1,300 microstrain unless another strain range better represents the flat portion of the curve. Any strain range other than 400 and 1,300 microstrain shall be reported with the modulus value. Specimens shall be in accordance with Type III, Fig. 1 of ASTM D 638, or in accordance with para. 6.1.1 of ASTM D 5083, except that actual laminate thickness shall be used.

*(b)* Flexural strength and flexural modulus of elasticity shall be determined by ASTM D 790. The molded surface (corrosion barrier) shall be tested in compression.

*(c)* Glass content, weight percent, shall be determined in accordance with ASTM D 2584.

*(d)* When required, the residual undisturbed glass fiber plies from ASTM D 2584 shall be separated carefully and counted and/or weighed to confirm standard lay-up sequence.



Copyright ASME International
Provided by IHS under license with ASME
No reproduction or networking permitted without license from IHS
Not for Resale

*(e)* Thickness shall be measured with a ball foot micrometer or caliper. When the configuration of the part will not allow the use of these instruments, a digital magnetic intensity instrument (ASTM D 4166) or an ultrasonic thickness gauge found to be accurate when measuring vessel cutouts shall be used.

*(f)* When required, thermal conductivity shall be measured in accordance with ASTM C 177.

*(g)* When required, thermal expansion shall be measured in accordance with ASTM D 696.

*(h)* For isotropic laminates, mechanical property testing in only one direction is required. For anisotropic laminates, testing in both the principal $x$ and $y$ directions is required.

## 2A-500 RECORDS

The results of all required tests shall be recorded and shall be available for review by the Inspector.

## 2A-600 ADDITIONAL STANDARD LAMINATE COMPOSITIONS FOR SUBPART 2A

Other standard laminates may be used only after they have been listed as acceptable in Subpart 2A. In order for the new laminate to receive proper consideration, information and data are required to properly categorize the laminate. In general, this information and data include, but are not necessarily limited to, the following.

*(a)* All materials of the laminate must be identified and suggested specifications provided for any material not covered in Appendices M-1 and M-2.

*(b)* The laminate information needed includes tensile strength, tensile modulus, glass content, and thickness. The information must be supplied in the form of Table 2A-1 and/or Table 2A-2, plus data for minimum properties of standard laminates, Table 2A-3. The data must be generated from laminates made under typical shop conditions and tested per para. 2A-400. The information must include the heat distortion temperature of the resin used, which is required to be 180°F or greater.

NOTE: The requester should consider supplying data on laminates made using two or more widely different specific gravity resins by three or more fabricators, together with the appropriate Type I and/or Type II control laminate data.

Where the laminate is intended for special applications, requires special handling, or has known limitations or susceptibility to failure in certain services, precautionary requirements and information should be included in the submittal. The data should be submitted on laminates intended for use in place of the design basis laminates of Type I and/or Type II, as outlined in para. 2A-300(a)(2). Examples of representative field experiences should be submitted.

NOTE: When the new laminate is a minor modification of an existing standard laminate, the data required may be reduced with the concurrence of the Committee. When the data supplied are insufficient for an adequate evaluation, the Committee will request additional data.

# SUBPART 2B
# REQUIREMENTS FOR LAMINATES DEVELOPED USING THE LAMINATION ANALYSIS METHOD

## 2B-100 LAMINATE COMPOSITION

Laminates shall consist of a corrosion resistant barrier (comprised of an inner surface and interior layer) and a structural layer.

## 2B-110 Inner Surface Corrosion Resistant Barrier

See para. 2A-221.

## 2B-120 Interior Layer Corrosion Resistant Barrier

See para. 2A-222.

## 2B-130 Structural Layer

*(a)* Application of the structural layer shall not alter the corrosion resistant barrier.

*(b)* The first layer of the structural portion of the laminate shall be one or more plies of chopped strand mat totaling $\frac{3}{4}$ oz/sq ft minimum or equivalent chopped roving saturated with resin. (c)

*(c)* The balance of the structural layer shall then be applied in strict duplication of the laminate sequence as designed per Appendix M-3.

## 2B-140 Outer Surface

See para. 2A-224.



Copyright ASME International
Provided by IHS under license with ASME
No reproduction or networking permitted without license from IHS

Not for Resale

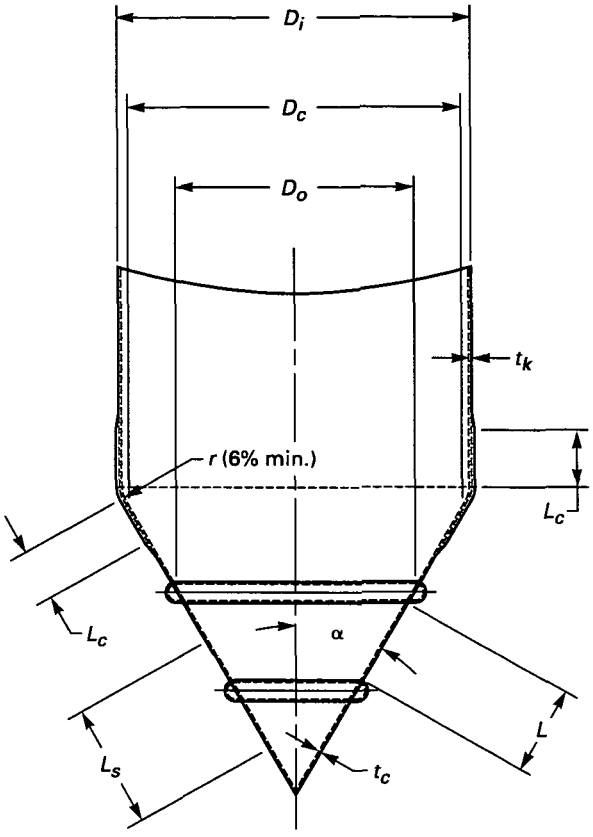


**(00) (b) FIG. 3-1 TORICONICAL HEAD DIMENSIONS**

$$S_c = \frac{P_d D_c}{2t_c \cos \alpha}$$

The stress $S_c$ must not exceed $S_u/F$.

For toriconical heads, compute the knuckle reinforcement length as follows:

$$L_c = \sqrt{\frac{D_i t_k}{\cos \alpha}}$$

The thickness of the knuckle $t_k$ shall be:

$$t_k = \frac{0.5MP_dR_c}{S_u/F}$$

where

$D_c$ = $D_i - 2r(1 - \cos \alpha)$, in.
$D_i$ = inside diameter of the conical portion of a toriconical head at the point of tangency to the knuckle, measured perpendicular to the axis of the cone (see Fig. 3-1), in.
$D_o$ = maximum outside diameter at the large end of the conical segment between stiffening elements (see Fig. 3-1), in.
$E_{ac}$ = axial tensile modulus for the cone, psi
$E_{hc}$ = hoop tensile modulus for the cone, psi
$E_{rc}$ = resultant modulus for the cone, psi = $(E_{ac}E_{hc})^{0.5}$
$F$ = design factor = 5
$K$ = $4 - 0.75(E_{rc}/1{,}000{,}000)$
$L$ = conical segment slant height (see Fig. 3-1), in.
$M$ = $0.25(3 + \sqrt{R_c/r})$
$P_a$ = allowable external pressure, psi
$P_d$ = design external pressure, psi
$r$ = inside knuckle radius (see Fig. 3-1), in. (6% minimum and at least three times the knuckle thickness)
$R_c$ = $D_c/(2 \cos \alpha)$
$S_u$ = ultimate tensile strength, psi
$t_c$ = cone thickness (see Fig. 3-1), in.
$t_k$ = knuckle thickness (see Fig. 3-1), in.
$\alpha$ = one-half the apex angle in toriconical heads and sections (see Fig. 3-1), deg

*(b)* When the half apex angle $\alpha$ exceeds 60 deg, the toriconical head shall be designed in accordance with Subpart 3B.

*(c)* For toriconical heads subject to external pressure, the knuckle radius shall be externally reinforced in accordance with Fig. 4-2, sketch (a). The total knuckle thickness $t_k$ shall be calculated in accordance with the rule in para. 3A-350(a). The thickness of a joint overlay near the knuckle radius tangent line of a toriconical head contributes to the knuckle reinforcement. For toriconical heads not subject to external or internal pressure, see Fig. 4-2, sketch (b).

*(d)* When Subpart 3A design rules are used, the secondary bond overlays shall be in accordance with para. 4-320.

### 3A-360 Stiffening Rings (b)

The required moment of inertia $I_s$ of a circumferential stiffening ring for conical shells under external pressure shall not be less than that determined by the following formula:

$$I_s = \frac{P_d L_s (D_o/\cos \alpha)^3 F}{24E_{hs}}$$

where

$E_{hs}$ = hoop tensile modulus for the stiffening ring, psi



Copyright ASME International
Provided by IHS under license with ASME
No reproduction or networking permitted without license from IHS
Not for Resale

$L_s$ = one-half of the conical segment slant distance from the centerline of the stiffening ring to the next line of support on one side, plus one-half of the conical segment slant distance from the centerline of the stiffening ring to the next line of support on the other side (see Fig. 3-1), in. A line of support is:

*(a)* a stiffening ring that meets the requirements of this paragraph;

*(b)* a toriconical head-to-cylinder junction;

*(c)* apex of a toriconical head.

## 3A-400 SEISMIC, WIND, AND SNOW LOADINGS

### (00) 3A-410 Design Loadings

The loadings to be considered in designing vessels shall include seismic loads, wind loads, and snow loads, determined by vessel installation, location, and customer specification as defined in the UBRS. The effects of liquid sloshing in large vessels shall be considered. The design shall be certified by a qualified registered Professional Engineer experienced in the design of reinforced plastics.

### 3A-420 Specifying Design Loadings

The magnitude and orientation of the forces enumerated in para. 3A-410 shall be as specified by the UBRS (see para. 1-200). Examples of codes and design calculations are shown in Appendix NM-3.

### 3A-430 Assumed Design Loadings

The vessel design shall be analyzed under the following loading combinations:

*(a)* operating loads plus seismic load;

*(b)* operating loads plus snow load;

*(c)* operating loads plus wind load;

*(d)* wind loads on an empty vessel.

Seismic, wind, and snow loads are considered to act separately. The forces are not cumulative.

### 3A-440 Stresses From Loadings

Stresses produced by seismic, wind, or snow loading, in conjunction with any appropriate working stresses, shall be less than $S_u/5$, a design factor of 5 for contact molded construction. For filament wound construction, the hoop strain shall be less than 0.002 in./in. and the axial stress shall be less than $S_u/5$.

### 3A-450 Loading Design Examples

Examples of wind and snow load design are given in Appendix NM-3. The wind load calculations are for static loading only and do not consider the effect of stress buildup due to resonant vibrations, which may be a factor in tall structures. These examples are given to illustrate the extent of analysis necessary to verify the resistance of equipment to these loads. Other methods of analysis may be used, provided that all of the stresses induced by these loads are considered and satisfy the requirements of Part 3.

### 3A-460 Hold-Down Lugs (00) (b)

Concentrated loadings resulting from hold-down lugs shall be calculated. A design method for hold-down lugs is given in Appendix NM-4. When hold-down lugs are attached in the shop or in the field, the attachment of the hold-down lugs shall be performed by secondary bonders qualified in accordance with Appendix M-5, and the vessel pressure test per para. 6-950 shall be performed after the attachment of the lugs. Final inspection per para. 6-900 shall be completed after the hold-down lug attachment and testing have been completed. The Fabricator retains overall responsibility for all field work, testing, and inspection.

The hold-down lug shall be parallel to and above the datum plane for flat-bottom vessels as shown in Fig. 4-1. Appendix NM-4 suggests a minimum dimension of $\frac{1}{2}$ in. between the datum plane and the bottom of the hold-down lug.

## 3A-500 LARGE DIAMETER RTP EQUIPMENT BODY FLANGES (c)

A method for designing flanges with full-face gaskets is given in Appendix NM-2. Dimensions and allowable pressures for representative flanges with full-face gaskets are given in Table NM2-1. The maximum allowable design stress value shall be 3,000 psi for flanges constructed of Type II laminates and 1,800 psi for flanges constructed of Type I laminates.

## 3A-600 VESSELS SUPPORTED BY SHELL ATTACHMENTS

Where the vessel is supported by attachments to the shell, the attachments and associated reinforcement shall be designed to avoid exceeding allowable stresses both in the attachments and the shell. Attachments may be fabricated from RTP or metal as agreed upon by the User and the Fabricator.



Copyright ASME International
Provided by IHS under license with ASME
No reproduction or networking permitted without license from IHS

Not for Resale

## TABLE 4-2 TYPICAL DIMENSIONS OF MANWAYS

| Minimum Size, in. | Minimum Diameter of Flange and Cover, in. | Minimum Thickness of Flange and Cover, in. | Min. Manway Wall Thickness, in. | Diameter of Bolt Circle, in. [Notes (1)–(3)] | Number of Bolts | Bolt Hole Diameter, in. |
|---|---|---|---|---|---|---|
| **Pressurized manway — up to 15 psig** | | | | | | |
| 20 | 27 1/2 | 1 | 3/8 | 25 | 20 | 3/4 |
| 22 | 30 | 1 | 3/8 | 27 | 20 | 3/4 |
| 24 | 32 | 1 1/4 | 3/8 | 29 1/2 | 20 | 3/4 |
| **Manway — atmospheric pressure, up to 0.5 psig** | | | | | | |
| 20 | 27 1/2 | 3/8 | 1/4 | 25 | 20 | 1/2 |
| 22 | 30 | 3/8 | 1/4 | 27 | 20 | 1/2 |
| 24 | 32 | 3/8 | 1/4 | 29 1/2 | 20 | 1/2 |

GENERAL NOTES:
(a) Bolt size equals bolt hole diameter minus 1/8 in. (3 mm).
(b) Gaskets shall be 1/8 in. thick full-face elastomeric material having a hardness of Shore A60 ±5.

NOTES:
(1) ±0.06 in. (ASME B16.5).
(2) ±0.03 in. center to center of adjacent bolt holes (ASME B16.5).
(3) ±0.06 in. eccentricity between bolt circle and center of nozzle.

## TABLE 4-3 FLANGE FLATNESS TOLERANCE

| Flange Size, in. | Tolerance, in. |
|---|---|
| 2–84 | +1/32 |
| 90–108 | +1/16 |
| 114–144 | +3/32 |



Copyright ASME International
Provided by IHS under license with ASME
No reproduction or networking permitted without license from IHS Not for Resale

# PART 5
# OVERPRESSURE PROTECTION

## 5-100 BASIS FOR DESIGN

### 5-110 Excessive Pressure

In view of the relatively low mechanical properties of RTP compared with metals, *careful* consideration must be given to excessive internal or external pressure.

### 5-120 Operating Characteristics

Operating conditions must reflect both normal and abnormal operations relating to internal or external pressure, venting, vessel overflow location, and process upsets.

## (c) 5-200 PROTECTION AGAINST OVERPRESSURE

All vessels within the scope of this Standard shall be provided with protection against internal and/or external pressure exceeding design conditions. This shall be the responsibility of the User.

The size and location of all nozzles used for overpressure protection, set forth in para. 5-300, shall be shown in the equipment sketch and nozzle schedule attached to the UBRS.

## 5-300 TYPE OF OVERPRESSURE PROTECTION

Protection against overpressure shall be accomplished by one or a combination of the following devices:

*(a)* direct spring-loaded safety or safety relief valves

*(b)* rupture disks

*(c)* deadweight loaded pallet-type vent valves

*(d)* free vents

*(e)* overflows

## 5-400 LOCATION OF OVERPRESSURE PROTECTION DEVICES

Devices listed in paras. 5-300(a) through (d) shall be located in the top of the vessel above the maximum liquid level.

Overflows for vertical vessels shall be on or below the top head tangent line. Overflows for horizontal vessels shall be located in the head or shell below the top of the shell.

The User shall not use free vents as liquid overflows.

## 5-500 INSTALLATION PRACTICES

Unsecured (not locked or sealed open) block valves shall not be installed between the vessel and any relieving device.

## 5-600 OVERPRESSURE DEVICE SET PRESSURE

Relief devices shall be set no higher than the design pressure corrected for hydrostatic head.

## 5-700 RELIEF DEVICE SIZING

### 5-710 Sizing of Spring or Deadweight Loaded Valves and Rupture Disks

Devices listed in paras. 5-300(a), (b), and (c) shall be sized in accordance with the device manufacturer's catalog so that at its full flow capacity the relief pressure shall not exceed 110% of the vessel design pressure.



Copyright ASME International
Provided by IHS under license with ASME
No reproduction or networking permitted without license from IHS

Not for Resale

### 5-720 Sizing of Vents and Overflows

Vents and overflows that discharge freely into the atmosphere shall be sized sufficiently to handle the flow displacement of all combined inlet and outlet nozzles without creating any pressure above the vessel's internal design pressure or any pressure below the vessel's external design pressure.

## 5-800 DISCHARGE LINES FROM PRESSURE RELIEF DEVICES

Discharge lines from pressure relief devices shall be designed to facilitate drainage or shall be fitted with an open drain to prevent lodging in the discharge side of the safety device. Discharge lines shall lead to a safe place of discharge. The size of the discharge lines shall be such that any pressure that may exist or develop will not reduce the relieving capacity of the relieving device below that required to protect the vessel properly.

## 5-900 RESPONSIBILITY FOR DESIGN AND SELECTION

The design and/or selection of pressure relief devices, the sizing of mounting nozzle, and the size, length, and routing of discharge piping shall be the responsibility of the User and not that of the Fabricator or the Inspector.



Copyright ASME International
Provided by IHS under license with ASME
No reproduction or networking permitted without license from IHS
Not for Resale

# PART 6
# INSPECTION AND TESTS

## 6-100 SCOPE

This Part covers inspection and testing of RTP corrosion resistant vessels. It is intended to ensure that a vessel has been designed and fabricated in accordance with the requirements of the latest revision of the design, the approved drawings, and this Standard.

This Part does not cover specifications, instructions, and inspections referred to in the purchase contract or User's Basic Requirements Specification (UBRS), which may be more restrictive than the requirements of this Standard and which may require additional verification by the User's inspector. Appendix NM-7 covers User's inspection.

## 6-200 INSPECTOR

See para. 1-400.

## 6-300 INSPECTION AND RESPONSIBILITY

*(a)* The Fabricator of a vessel has the responsibility to comply with all the requirements of this Standard, the design, and the UBRS. The Fabricator is additionally responsible for assuring that any RTP subassemblies or components fabricated by a Subcontractor that will become a portion of the vessel and are part of the scope of RTP-1 (see paras. 1-110 and 1-120) shall be fabricated by an ASME RTP-1 accredited shop and are to be in full compliance with all the requirements of RTP-1. Partial Data Reports shall accompany any such subassembly or component and shall be signed by the Subcontractor's Certified Individual.

*(b)* Any subcontracted or outsourced subassembly or component to be furnished with a vessel by a Fabricator that will become a portion of the vessel, or a load-bearing accessory that will be attached to the vessel (i.e., a support), must also be inspected by the Fabricator's inspector. Procedures and general requirements for acceptance or rejection shall be part of the Fabricator's Quality Control Program.

*(c)* The Fabricator shall have a written Quality Control Manual, to include defined procedures and forms so as to control the process of fabrication. The Fabricator's Quality Control Program shall be supervised by the Fabricator and shall be in effective operation throughout the process of fabrication. See Appendix M-4.

*(d)* A copy of the Fabricator's Quality Control Manual shall be made available to the Inspector on request. The Fabricator's Quality Control Manual may contain proprietary information and procedures. No copies of the Fabricator's Quality Control Manual shall be removed from the Fabricator's premises without the Fabricator's permission. This security protection, however, is not to apply to quality control forms and checklists which may be a portion of the Quality Control Manual but are necessary to be used during fabrication to check and control the fabrication process.

*(e)* The Certified Individual's responsibility is to verify that the Fabricator's Quality Control Program is in effective operation via an annual audit as required in para. 1-410(a), and to additionally make such specific inspections and tests as are required by this Standard. The Inspector shall provide a complete report including all data as required in paras. 6-910 through 6-960.

*(f)* Prior to the start of fabrication, the Fabricator shall make available to the Inspector such records pertaining to the vessel as required to permit the Inspector to perform the inspections. These shall include drawings, design calculations, material test results, UBRS, Fabricator's Design Report, and any other reports or records as required. The Fabricator shall provide for Inspector's hold points and verifications of satisfactory completion. Fabrication shall not proceed beyond a hold point until specified inspections have been made.

*(g)* The Fabricator shall make his or her quality control personnel available to the Inspector.

*(h)* The Fabricator shall make available to the Inspector any and all necessary tools and test equipment so the Inspector may conduct all inspections required by this Standard.

*(i)* Final acceptance of the vessel by the Certified Individual shall be obtained by the Fabricator prior to the application of the official ASME RTP-1 Symbol. The Certified Individual shall sign the Fabricator's Certificate of Compliance on the Fabricator's Data (c)



Copyright ASME International
Provided by IHS under license with ASME
No reproduction or networking permitted without license from IHS

Not for Resale

Report only when the Certified Individual is satisfied that all requirements of this Standard have been met. See paras. 6-900(d) and (e).

## 6-400 CONDITIONS FOR INSPECTION

*(a)* The Fabricator shall assure that the vessel is clean and free of foreign materials to permit the Inspector to inspect all accessible surfaces.

*(b)* The Fabricator shall position and assure that the vessel is in suitable condition to permit reasonable and safe access for inspection.

*(c)* The Fabricator shall provide reasonable and safe means, such as ladders and/or platforms, to permit the Inspector to safely inspect accessible inner and outer surfaces of the vessel.

## 6-500 EQUIPMENT DESIGN

The Inspector shall examine the Fabricator's design records and reports and verify that the vessel conforms to the latest revision of approved drawings and the UBRS, and that the Fabricator's Design Report has been certified by a registered Professional Engineer.

## 6-600 MATERIALS

The Inspector shall verify that materials used in fabrication of a vessel comply with the requirements of this Standard and the UBRS.

## 6-700 FABRICATION

The Inspector shall establish hold points and make periodic inspections and measurements of the vessel as are required by this Standard to verify that fabrication is in accordance with the requirements of this Standard and the UBRS.

At the completion of each hold point inspection, the Inspector shall report results on forms provided in the Fabricator's Quality Control Program, and highlight any discrepancies requiring corrective action.

## 6-800 FABRICATOR'S QUALITY ASSURANCE PROGRAM

The Inspector shall make such checks as are necessary to verify that the Fabricator's Quality Assurance Program is in effective operation. In addition, the Certified Individual shall perform an annual audit of the Fabricator's Quality Assurance Program.

Any discrepancies shall be promptly brought to the Fabricator's attention for discussion and resolution.

## 6-900 FINAL INSPECTION

*(a)* At the time of final inspection, the Fabricator shall provide to the Inspector the final revision of all of the following documents:

*(1)* design drawings;

*(2)* UBRS;

*(3)* completed and signed copies of all forms from the Fabricator's Quality Control Manual that were used during fabrication to check and verify compliance with this Standard and the design;

*(4)* any copies of Fabricator's Partial Data Reports, with signed Certificates of Compliance, applicable to the finished fabrication (see Table 1-3);

*(5)* copies of all inspection reports made by any inspector/Inspector during the course of fabrication;

*(6)* completed original copy of the Fabricator's Data Report, applicable to the vessel to be inspected, with the Certificate of Compliance signed and dated by the authorized representative of the Fabricator (see Table 1-2);

*(7)* copy of the final revision of the Fabricator's Design Report;

*(8)* the nameplate that is to be applied to the vessel, so that the Inspector may verify that the nameplate meets the requirements of the UBRS and para. 1-540.

*(b)* Design drawings must show design thicknesses and the laminate reinforcing sequence for every section or member. If, during the course of fabrication, it was necessary to add repeatable units to the laminate [see para. 6-920(f)(4)], this change shall be noted and highlighted on the drawings provided to the Inspector.

*(c)* The Fabricator shall also make available to the Inspector all nozzle and manway cutouts, each identified clearly as to its point of origin on the vessel.

*(d)* Upon completion of final inspection, the Inspector shall prepare a brief report summarizing his or her inspection activities and findings, and submit the report to the Fabricator as an attachment to the Certificate of Compliance.

*(e)* When the Inspector has completed the inspections and found the results to be within required tolerances, the Inspector shall present his or her inspection report along with any findings to the Certified Individual. The Certified Individual shall sign and date the Certificate of Compliance prior to returning it to the Fabricator with the inspection report.

*(f)* Paragraphs 6-910 through 6-960 describe the minimum basic tests that must be made, witnessed, or verified by the Inspector prior to or at the time of final inspection.



Copyright ASME International
Provided by IHS under license with ASME
No reproduction or networking permitted without license from IHS
Not for Resale

## 6-910 Resin Cure

*(a)* During the course of fabrication, the Fabricator shall make all such checks necessary to assure that resin additives, promotion, catalyzation, dilution, and curing are controlled and are within the requirements of this Standard. The Fabricator's Quality Control Program shall include procedures and forms, to be used throughout fabrication, to control the ongoing process of resin handling and curing so as to ensure that cure is within required tolerance prior to the final inspection.

*(b)* The Inspector shall verify that the resin has properly cured by testing the internal (process exposed) surfaces of major equipment components and joints such as:

heads
shell sections
head/shell and shell/shell juncture overlays
nozzle and manway necks 18 in. diameter and larger
manway covers and blind flanges

Additionally, the following external surfaces shall be tested to verify proper resin cure:

head/shell and shell/shell juncture overlays
nozzle and manway juncture overlays

Testing shall be as follows:

*(1)* Surface hardness shall be determined in accordance with ASTM D 2583, except D 2583 paras. 6.1, 8.1, 8.2, and 10.1. Allowable surface temperature range shall be 50 to 90°F. Readings shall not be taken on pits, heavy mold release, or other irregularities that may affect the readings. Only dense resin-rich surfaces shall be tested. The Barcol reading will be the average of five impressions taken at various points broadly distributed about the component or joint so as to provide a representative hardness.

*(2)* If low Barcol readings are encountered on wax top-coated surfaces, retest after removing the wax by light sanding or scraping.

*(3)* Barcol test data must verify that the surface hardness of laminates with glass surfacing veil (mat) or carbon surfacing veil (mat) has reached at least 90% of the hardness specified by the resin manufacturer for a clear resin casting.

*(4)* Laminates with organic surfacing veil (mat) may have a Barcol reading lower than 90% of the hardness as specified by the resin manufacturer for a clear resin casting. The minimum acceptable Barcol reading must be established between the User and Fabricator prior to fabrication.

*(5)* Barcol instruments shall be calibrated prior to and during use using the test discs and procedure recommended by the manufacturer of the Barcol instrument.

*(6)* The Inspector shall confirm that minimum Barcol hardness values have been established, the test values are within acceptable limits, and the Barcol instrument has been calibrated.

*(7)* The Inspector shall verify that all potential air-inhibited interior surfaces and overlays, and other surfaces selected at the Inspector's option, shall pass an acetone sensitivity test. For this test, a few drops of acetone are applied to a 1 sq in. to 2 sq in. area, which is rubbed slightly until the acetone has evaporated. Tackiness or softness indicates unacceptable cure of the surface resin. **(00)**

*(c)* Failure to meet the requirements of these tests shall be considered a nonconformance and corrections must be made by the Fabricator in accordance with Appendix M-7.

*(d)* The Inspector shall include results and Barcol data from the above tests in the inspection report.

## 6-920 Dimensions and Laminate Thickness Checks

*(a)* During the course of fabrication, the Fabricator shall make checks to assure that dimensions and laminate thicknesses are within the requirements of this Standard and the design. The Fabricator's Quality Control Program shall include procedures and forms, to be used throughout fabrication, to control the ongoing process of checking all dimensions and laminate thicknesses (to assure that they are within required tolerances) prior to the final inspection.

*(b)* Refer to Fig. 4-1 for mandatory dimensional tolerances. The Inspector shall verify that all these dimensions are within tolerances.

*(c)* Refer to Figs. 4-2 through 4-11 for details and tolerances on overlay, flange, nozzle, and manway designs. The Inspector shall select and check several of these details.

*(d)* Overlays at head-to-shell and shell-to-shell joints and at manways shall be closely inspected and shall conform to the requirements of Part 4.

*(e)* The Inspector shall select and check several laminate thicknesses critical to the safe performance of the equipment. Approved methods of measurement are outlined in para. 2A-400(e).

*(f) Laminate Thickness and Tolerances*

*(1)* The nature of existing practical RTP fabrication methods leads to nonparallel and somewhat irregular surfaces of a laminate. Consequently, a single thickness measurement at one point is not sufficient to characterize



Copyright ASME International
Provided by IHS under license with ASME
No reproduction or networking permitted without license from IHS

Not for Resale

## TABLE 7-1 REQUIRED RESINS AND ACCEPTABLE FABRICATION PROCESSES FOR DEMONSTRATION LAMINATES (c)

| Type [Note (1)] | Nominal Demonstration Laminate Thickness, in. [Note (2)] | Required Resins [Note (3)] | Fabrication Process [Note (4)] | Qualification |
|---|---|---|---|---|
| Type I | 0.48 | 1 polyester or 1 vinyl ester | 1, 2 | All resins, all thicknesses |
| Type II | 0.49 | 1 polyester or 1 vinyl ester | 1, 2 | All resins, all thicknesses |
| Filament wound | 0.37 to 0.625 | 1 polyester or 1 vinyl ester | 3 | All resins, all thicknesses |

GENERAL NOTE: A Fabricator must qualify all those fabrication processes planned to be used to construct vessels to this Standard.

NOTES:
(1) Designates laminate reinforcement type.
(2) Thicknesses are nominal only. Sizable variations in actual thickness can be expected based on variables such as technique and the selection of resin and glass.
(3) Generic classes of resins required for qualification.
(4) Process employed to produce the laminate:
1 — Hand lay-up.
2 — Spray-up using a chopper gun device.
3 — See para. 7-620(b).

of this Standard. Such demonstration qualifies the Fabricator to produce laminates by those specific processes qualified for a maximum period of 5 years.

*(b)* Each Fabricator's shop must redemonstrate the ability to fabricate laminates, as required by the rules of this Standard, at no greater intervals than 5 years.

*(c)* Subparts 2A and/or 2B provide specific rules governing all laminates and refer to design basis laminates that a Fabricator is required to make in order to establish values for strength, thickness, and glass content. The demonstration laminates required by this Part are for the purpose of qualifying the Fabricator and shop procedures. They may also be used to qualify Laminators (see Appendix M-5). Demonstration laminates and design basis laminates are not the same in purpose; hence requirements in terms of configuration, quantity to be produced, and tests may differ.

*(d)* Demonstration laminates are required for each type of laminate and each laminating process the Fabricator shall use on vessels fabricated to this Standard; refer to Table 7-1. Table 7-1 also summarizes, by laminate type, the qualification (thickness and resins) a Fabricator shall achieve by producing satisfactory demonstration laminates.

*(e)* Each demonstration laminate shall be identified and labeled by the Fabricator in accordance with para. 7-900.

*(f)* Demonstration laminates shall be tested in accordance with this Standard by an independent testing laboratory. The independent testing laboratory shall return the remains of the demonstration laminate and specimens with a certified written report. The report shall state the results of the tests.

*(g)* A Fabricator's shop is qualified to produce a specific type of laminate by a specific process provided the certified test report indicates that the demonstration laminate meets or exceeds the requirements of this Standard. See para. 7-700.

*(h)* Upon the successful completion of a Demonstration Laminate Test Program, Fabricators shall complete a document of "Demonstration Laminate Certification." This document is to be maintained within the Fabricator's quality control files and a copy shall be made available to a User, User's Agent, or Inspector on request. In this document the Fabricator shall certify, via the dated signature of his or her authorized agent, the following.

*(1)* The demonstration laminate samples were constructed according to all requirements of this Standard.

*(2)* Tests were conducted on the demonstration laminates according to all requirements of this Standard.

*(3)* The test data has been carefully examined by the Fabricator and the results are in accordance with all requirements of this Standard.



Copyright ASME International
Provided by IHS under license with ASME
No reproduction or networking permitted without license from IHS
Not for Resale

**TABLE 7-2 DIMENSIONAL REQUIREMENTS FOR HAND LAY-UP AND SPRAY-UP DEMONSTRATION LAMINATES**

| Req. No. | Requirements |
|---|---|
| (1) | A demonstration laminate must be square within ±0.3 deg, measuring 24 in. ±1/16 in. on each side. |
| (2) | The peak deviation from flatness of the inner surface shall not exceed 3/16 in. |
| (3) | The average spot thickness of a demonstration laminate shall be determined by procedures outlined in para. 6-920 and shall be within tolerances established in Subpart 2C. |
| (4) | Edges of a demonstration laminate shall be smooth and not jagged. Edge indentation or chips shall not exceed 1/32 in. in depth. |
| (5) | For demonstration laminates made by the spray-up process, a 24 in. x 24 in. test sample is to be cut from the center of an approximately 30 in. x 30 in. fabrication. |

*(4)* The next required date for demonstration of capability via demonstration laminates shall be indicated.

*(5)* Test reports from the independent testing laboratory are referenced by the specific date and/or reference number within the certification document and a copy attached thereto.

## 7-610 Hand Lay-Up and Spray-Up Demonstration Laminates

*(a)* All Fabricators must produce and qualify hand lay-up Type I and Type II laminates in accordance with requirements in Tables 7-1, 7-2, and 7-3.

*(b)* Those Fabricators who plan to produce laminates by the spray-up (chopper gun) process must also produce and qualify spray-up Type I and Type II laminates in accordance with requirements in Tables 7-1, 7-2, and 7-3.

*(c)* After fabrication, the Fabricator shall identify each demonstration laminate in accordance with the instructions in para. 7-900.

*(d)* The quality control records must contain a description of the fabrication procedure used to produce each demonstration laminate.

*(e)* The mechanical properties of each demonstration laminate shall be determined in accordance with para. 7-1000.

## 7-620 Filament Wound Demonstration Laminates

*(a)* Those Fabricators who plan to produce laminates by the filament winding process must produce and qualify filament wound laminates in accordance with the requirements in Table 7-1. Qualification for filament winding shall be in addition to qualification for Type I or Type II laminates. Both qualifications are required for Fabricators planning to construct filament wound vessels to this Standard, as Type I or Type II laminates are required for the fabrication of heads or when joining the subassemblies of vessels together.

*(b)* Since there are many process variations employed to produce filament wound laminates, each requiring distinctly different tooling, controls, and skills, this Standard requires that a Fabricator qualify all those process variations to be used in the construction of filament wound vessels to this Standard. **(c)**

Some examples of process variations, each requiring a demonstration laminate, are:

*(1)* dry continuous filament winding

*(2)* wet (bath) continuous filament winding

*(3)* tape winding in conjunction with (1) or (2) above

*(4)* spray-up in conjunction with (1) or (2) above

It is possible to qualify more than one of the above variables in a single demonstration laminate, so long as that resulting laminating process shall routinely be employed to produce vessels to this Standard.

*(c)* Demonstration laminates shall have a Type I hand lay-up or spray-up liner over which the structural filament wound layer is applied. This liner shall exotherm and cool before the structural filament wound layer is applied.

*(d)* A minimum of one ply of 3/4 oz/sq ft chopped strand mat or an equivalent weight by the chopped



Copyright ASME International
Provided by IHS under license with ASME
No reproduction or networking permitted without license from IHS

Not for Resale

## TABLE 7-3 REINFORCEMENT REQUIREMENTS FOR HAND LAY-UP AND SPRAY-UP DEMONSTRATION LAMINATES (00)

| Laminate Type | Nominal Thickness, in. [Notes (1), (2)] | Liner Plies | | | Structural Plies | | | | | | | | | |
|---|---|---|---|---|---|---|---|---|---|---|---|---|---|---|
| | | 1 | 2 | 3 | 4 | 5 | 6 | 7 | 8 | 9 | 10 | 11 | 12 | 13 |
| Type I | 0.48 | *V* | *M* | *M* | *M* | *M* | *M* | *M* | *M* | *M* | *M* | *M* | *M* | ... |
| Type II | 0.49 | *V* | *M* | *M* | *M* | *R* | *M* | *R* | *M* | *R* | *M* | *M* | *R* | *M* |

GENERAL NOTES:
(a) Thicknesses above 0.76 in. nominal can be used following pattern established for 0.76 in. thick laminate.
(b) Actual thickness and glass content of each sequence of plies shall be established by each Fabricator based on his or her design basis laminate.
(c) Corrosion barrier (plies 1, 2, and 3) shall gel and exotherm before structural plies are added.
(d) Structural lay-up may be interrupted long enough to exotherm between adjacent *"MM"* plies. If required by fabrication procedure, location of exotherm plies may be changed by shifting ply 10 within the laminate body or by splitting an *"M"* ply into weight-equivalent layer(s).
(e) A weight equivalent layer or layers of chopped strand glass or mat may be used in place of layers of 1.5 oz mat.

NOTES:
(1) Nominal thickness is calculated as follows:
*V* = 10 mil surface mat (veil) – 0.010 in./ply
*M* = 1½ oz/sq ft mat – 0.043 in./ply
*R* = 24 oz/sq yd woven roving – 0.033 in./ply
(2) This information is based on historical data and may not reflect all laminates made today. Laminates made today are often thinner and have a higher glass content than noted in the Table. The Table should be used for establishing minimum glass plies per nominal laminate thickness. Ply thicknesses should be based on design basis laminates.

spray method shall be applied over the liner immediately before starting the filament wound structural layer.

*(e)* A filament wound demonstration laminate shall be a 24 in. × 24 in. $\pm 1/16$ in. section cut from a hoop, wound on a mandrel with a minimum diameter of 8 ft to minimize the effects of curvature on sample testing. The width of the hoop shall be greater than 24 in. by a margin sufficient to avoid turnaround areas in the 24 in. × 24 in. cut section from which test samples shall be taken.

*(f)* The thickness of the demonstration laminate shall be 0.37 in. minimum, but may be increased up to 0.625 in. to allow for variations in winding or laminating sequences which require thicknesses over 0.37 in. to complete.

(c) *(g)* Filament wound demonstration laminates shall be tested in accordance with para. 7-1000. Tensile strength and tensile modulus per para. 7-1000(c) shall be obtained in the axial direction only. Also, disregard para. 7-1000(a)(2).

*(h)* Refer to para. 7-900(a)(4). Fabricators shall provide a comprehensive description of the filament wound laminate sequence.

## 7-700 MINIMUM TEST VALUES FROM DEMONSTRATION LAMINATES

*(a) Type I or Type II Demonstration Laminates*

*(1)* Dimensions shall be within tolerances outlined in Table 7-2.

*(2)* Barcol hardness readings shall show that 80% of the readings meet or exceed 90% of the resin manufacturer's published casting hardness data.

*(3)* Tensile strength and tensile modulus values shall meet or exceed the values given in Table 2A-3.

*(b) Filament Wound Demonstration Laminates* (c)

*(1)* Dimensions shall be within tolerances outlined in paras. 7-620(e) and (f).

*(2)* Refer to para. (a)(2) above for Barcol hardness requirements.

*(3)* Axial tensile strength and tensile modulus values shall meet or exceed those values given for a Type I laminate in Table 2A-3.

## 7-800 DEMONSTRATION VESSEL

Fabricators shall design, fabricate, and must satisfactorily test a demonstration vessel in accordance with instructions contained in Appendix M-6.



Copyright ASME International
Provided by IHS under license with ASME
No reproduction or networking permitted without license from IHS
Not for Resale

The design and fabrication of the demonstration vessel requires a comprehensive understanding of this Standard. It involves a full demonstration of the Fabricator's ability to design, execute drawings, qualify demonstration laminates, establish design values from design basis laminates, qualify Laminators and Secondary Bonders, and fabricate under effective overview of the Fabricator's Quality Control Program, all in full accordance with the requirements of this Standard.

No Fabricator shall claim qualification to fabricate to this Standard until having satisfactorily completed and tested the demonstration vessel in accordance with the instructions in Appendix M-6.

## (00) 7-900 IDENTIFYING DEMONSTRATION LAMINATES

*(a) Identification Report.* A complete identification report shall accompany each demonstration laminate. This must include:

*(1)* Fabricator's shop name, address, phone number

*(2)* identification of person fabricating the laminate

*(3)* date the laminate was completed

*(4)* fabrication process

*(5)* description of fabrication materials used

*(a)* resin manufacturer's name and designation for resin

*(b)* generic class of resin

*(1)* polyester

*(2)* vinyl ester

*(c)* reinforcement manufacturer's name(s) and designation for reinforcement(s)

*(b) Labeling.* The Fabricator shall clearly label each demonstration laminate with the following:

*(1)* name of the Fabricator's shop and identification of person who fabricated the laminate

*(2)* date laminate was completed

*(3)* type of laminate (Type I, Type II, filament wound)

*(4)* inner surface and outer surface must be identified

*(5)* the two warp strand edges on Type II laminates, and hoop and axial directions on filament wound laminates, must be identified

*(6)* resin and reinforcement manufacturers and their Manufacturer's Specific Product Identifications (MSPI)

## 7-1000 LABORATORY TEST AND TEST REPORT REQUIREMENTS FOR DEMONSTRATION LAMINATES (00)

The demonstration laminate specimen must be tested, and information recorded and reported, in accordance with the following requirements.

*(a) Dimensional Measurements of the Demonstration Laminate*

*(1)* The length and width of the demonstration laminate shall be measured and recorded.

*(2)* The flatness of the demonstration laminate shall be determined by measuring the maximum possible gap under a straightedge placed on the veil side and moved about to achieve a maximum gap; this gap shall be recorded. (Disregard for filament wound laminates.)

*(3)* The average thickness of the demonstration laminate shall be determined using the procedures outlined in para. 6-920(f)(2)(a). All measurement data shall be recorded. Measurements should be taken at the approximate center of the demonstration laminate.

*(4)* The testing report shall summarize measurements taken and state compliance or nonconformance with the requirements of this Standard. Reference is made to Table 7-2, paras. 7-620(e) and (f), and Subpart 2C.

*(b) Barcol Hardness and Acetone Sensitivity Test*

*(1)* Barcol hardness shall be determined on the demonstration laminate inner surface in accordance with para. 6-910(b), and all Barcol readings shall be recorded.

*(2)* 80% of the Barcol hardness readings taken must meet or exceed 90% of the resin manufacturer's published hardness data.

*(3)* An acetone sensitivity test shall be conducted in accordance with para. 6-910(b)(7).

*(4)* The testing report shall summarize the Barcol hardness measurements and the results of the acetone sensitivity test, and state compliance or nonconformance with the requirements of this Standard.

*(c) Tensile Strength and Tensile Modulus of Elasticity*

*(1)* Tensile strength and tensile modulus of elasticity shall be determined using the method given in ASTM D 638.

*(2)* Test specimens shall be taken from equally spaced areas on the demonstration laminate. Specimens



Copyright ASME International
Provided by IHS under license with ASME
No reproduction or networking permitted without license from IHS

Not for Resale

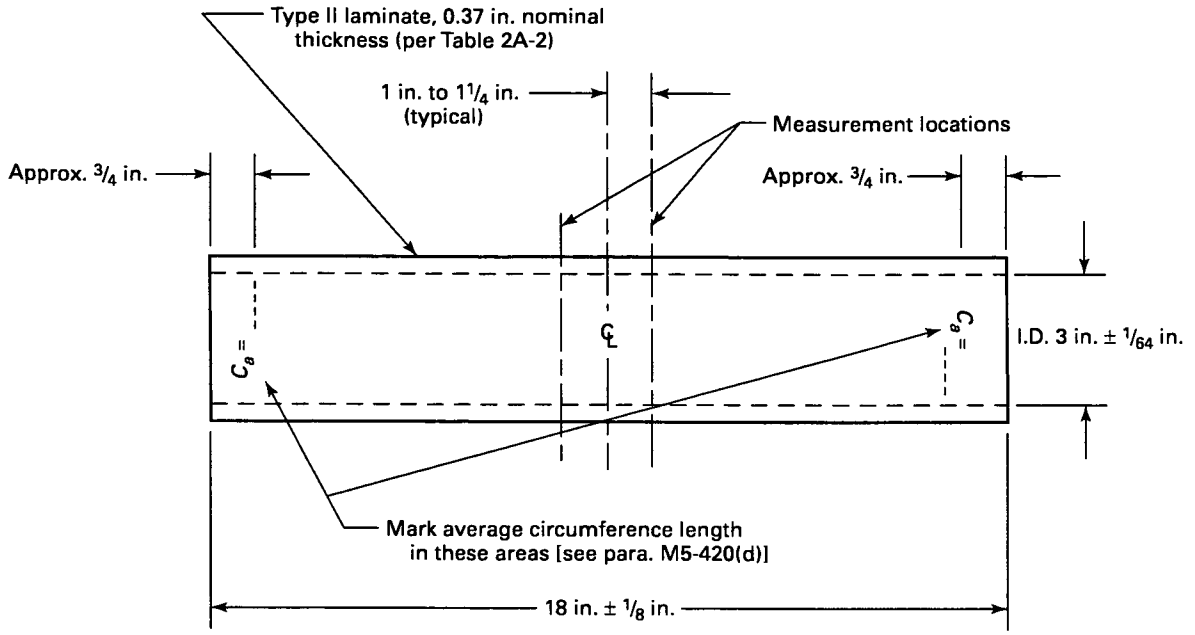


**FIG. M5-1 PIPE TEST PIECE** (c)

70°F to 80°F for at least 72 hr before the Secondary Bonder may begin to make overlays.

## M5-420 Making Secondary Bond Test Assemblies

*(a)* The Secondary Bonder must overlay three pipe test pieces to make three secondary bond test assemblies as illustrated in Fig. M5-2.

*(b)* The Secondary Bonder shall prepare the pipe test pieces for overlay per para. 4-320(a). Care should be taken to maintain an even surface and constant circumference, avoiding removal of excess material that would result in grooves, tapers, or flat spots.

*(c)* After preparation for overlay, the circumference of the area to be overlayed shall be measured using a metal tape measure at the points indicated in Fig. M5-1. This must be done for each of the three pipe test pieces to be overlayed. Measurements must be made in accordance with para. M5-400(b)(2). Measurement accuracy shall be $\pm 1/16$ in. and rounded to the nearest $1/16$ in.

*(d)* For each of three pipe test pieces, the two circumference measurements shall be recorded in the Secondary Bonder Qualification Report. When recording measurements, express the values as the decimal equivalents of the measurements taken. Calculate the average of the two circumference measurements and round it off to the nearest hundredth of an inch; this value is $C_a$. The value of $C_a$ shall be recorded in the report and also marked in $1/2$ in. to $3/4$ in. size numerals, with a black indelible marker, at each end of a pipe test piece. See Fig. M5-1 for approximate locations where the average circumference value $C_a$ is to be marked on each pipe test piece.

*(e)* The Secondary Bonder shall then overlay the three pipe test pieces, following instructions in paras. 4-320(b) through (d), so as to make secondary bond test assemblies as shown in Fig. M5-2. Nonpigmented resin is to be used.

## M5-430 Making and Measuring Secondary Bond Test Specimens

*(a)* After the overlay is cured, and cure is verified per the instructions in para. 6-910, machine the secondary bond test assemblies to make secondary bond test specimens in accordance with Fig. M5-3.

*(b)* Each secondary bond test assembly makes two secondary bond test specimens when cut on the centerline of the overlay.

*(c)* A minimum of five secondary bond test specimens are required to be made for testing.

*(d)* Machining operations may be done by the Fabricator, at another firm or location, or at an independent testing laboratory.



Copyright ASME International
Provided by IHS under license with ASME
No reproduction or networking permitted without license from IHS
Not for Resale

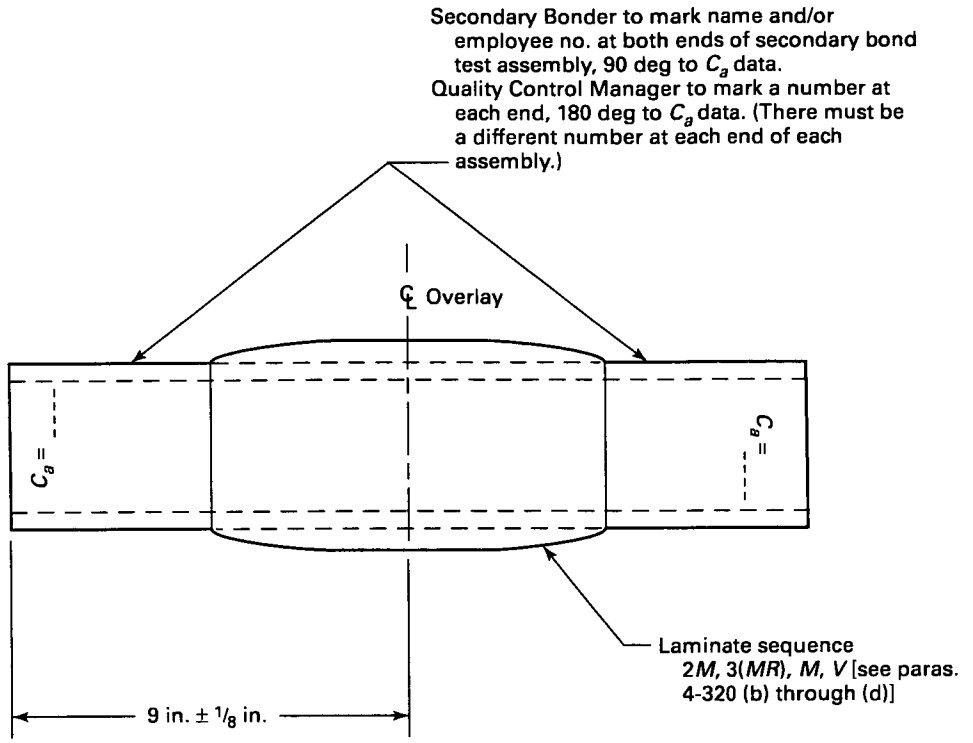


**FIG. M5-2 SECONDARY BOND TEST ASSEMBLY**

## M5-440 Testing Secondary Bond Test Specimens and Calculating Secondary Bond Shear Strength

*(a)* When machining is complete, five secondary bond test specimens must be tested by an independent testing laboratory.

*(b)* Prior to testing, the average engagement height of the shear collar must be determined for each secondary bond test specimen.

*(c)* Measurements and calculations to determine the average engagement height of the shear collar must be done at the independent testing laboratory where the test specimens are to be tested.

*(d)* To determine the average engagement height $H_a$ for each test specimen, proceed as follows.

*(1)* Refer to Fig. M5-3.

*(2)* Using a vernier caliper, make three measurements of the shear collar height $L$ at approximately 120 deg intervals and record the measurements in the Secondary Bonder Qualification Report. The average of the three measurements $L_a$ shall be calculated; the value shall be rounded off to the nearest hundredth of an inch, recorded in the report, and also marked on each test specimen in approximately the area shown in Fig. M5-3. Refer to para. M5-420(d) for marking requirements. Measurement accuracy shall be ±0.010 in.

*(3)* Using a vernier caliper with a depth slide, make three measurements of the relief bore depth $D$ at approximately 120 deg intervals. Follow the same general procedures as in the preceding paragraph for recording measurements, averaging and rounding data to arrive at the average relief bore depth $D_a$, and marking the specimen. Measurement accuracy shall be ±0.010 in.

*(4)* To calculate the engagement height $H_a$ for each test specimen, calculate as follows:

$$H_a = L_a - D_a$$

Record the values of $H_a$ in the Secondary Bonder Qualification Report and mark them on the test specimens in accordance with previous instructions. Testing of specimens may now commence.

*(e)* Specimens must be tested in compression in a laboratory testing machine such that the secondary bond area under the shear collar fails in shear. The crosshead speed shall be 0.05 in./min.



Copyright ASME International
Provided by IHS under license with ASME
No reproduction or networking permitted without license from IHS
Not for Resale

## TABLE M6-1 USER'S BASIC REQUIREMENTS SPECIFICATION (UBRS) (CONT'D) (00)
## As Required by the Provisions of ASME RTP-1 (b)

 (c)

RTP Edition No._____

UBRS Revision No._____

Wind/seismic/snow code (include edition or year) ASCE-7

Basic wind speed 0 MPH Classification category _____ Exposure _____

Elevation above grade _____ ft Topographic factors _____

Seismic zone 1 Site-specific seismic information (soil type, ground motion coefficients, etc.) _____

Snow load 0 psf

Capacities: Operating Flooded gal Flooded By Fabricator gal

5.2 Mechanical agitator: [ ] Required [ ] Not required

Dead load _____ lb

Static bending moment _____ ft-lb

Dynamic bending moment _____ ft-lb

Torque _____ ft-lb

Horsepower _____ hp

Impeller speed _____ RPM Impeller diameter _____ in.

Number of impellers _____ Foot bearing: [ ] Yes [ ] No

5.3 Heating and cooling:

[ ] Electric panels

[ ] Steam coil

[ ] Steam sparger

[ ] Heat exchanger

[x] Other Not applicable

5.4 Mechanical and other forces:

[ ] Violent chemical reaction

[ ] Subsurface introduction of gas or vapor

[ ] Subsurface introduction of steam

[ ] Transmitted mechanical load/force

[ ] Impact due to introduction of solids

[ ] Vacuum from pump down (or vessel draining)

[ ] Vacuum from cool down

[x] Other Not applicable

5.5 Corrosion barrier excluded from structural calculations:

[ ] Yes

[x] No

5.6 Declaration of *critical service* (only by User or User's Agent; refer to para. 1-210 of ASME RTP-1):

[ ] Yes

[x] No

6. Designation of Inspector (Review paras. 1-400, 1-430, and 1-440 of ASME RTP-1. It must be recognized that ASME RTP-1 establishes numerous duties for the Inspector, which necessitates that the Inspector be present in the fabrication shop throughout a major portion of the fabrication interval.). Inspector shall be:

[x] Fabricator's Quality Control principal

[ ] User's representative

[ ] Other



Copyright ASME International
Provided by IHS under license with ASME
No reproduction or networking permitted without license from IHS

Not for Resale

(00)

## TABLE M6-1 USER'S BASIC REQUIREMENTS SPECIFICATION (UBRS) (CONT'D)
## As Required by the Provisions of ASME RTP-1



RTP Edition No._____

UBRS Revision No._____

Inspector's name _____ Telephone _____

Company _____

Address _____

_____

6.1 Approval of Inspector designation

6.1.1 *Authorized User's representative:*

Name _____ Title _____

Signature _____ Date _____

6.1.2 Authorized Fabricator's representative:

Name _____ Title _____

Signature _____ Date _____

Additional requirements: Dimensional tolerances per Fig. NM7-1 are specified as mandatory.

All gaskets to be full faced, $\frac{1}{8}$ in. Neoprene at 60±5 Shore A durometer.

All bolts to be B8 or B7 studs, or A 307 Grade B bolts.

GENERAL NOTE: This form may be reproduced and used without written permission from ASME if used for purposes other than republication.



Copyright ASME International
Provided by IHS under license with ASME
No reproduction or networking permitted without license from IHS
Not for Resale

## TABLE M12G-1 USER'S BASIC REQUIREMENTS SPECIFICATION (UBRS) (CONT'D) (00)
## As Required by the Provisions of ASME RTP-1



RTP Edition No._____

UBRS Revision No._____

[ ] Additional inspection aids/methods [refer to para. 6-940(c) of ASME RTP-1] _____

3. Material selection

3.1 Material selection by:

[ ] Resin manufacturer (include data per section 4 of this document)

[ ] Fabricator (include data per section 4 of this document)

[ ] End User. Applicable User's specifications/standards, codes, ordinances, FDA requirements, etc. (list and specify; attach copies of local code/ordinance requirements) _____

[x] Other As required by Mandatory Appendix M-12

3.2 Material of construction:

Resin _____ Catalyst/cure system CoNap/MEKP

Veil _____ Barcol hardness per para. 6-910(b)(4) _____

[ ] Lift lugs: [ ] RTP [ ] Carbon steel [ ] Other _____

[ ] Hold down lugs: [ ] RTP [ ] Carbon steel [ ] Other _____

4. Chemical service data (must be provided when Fabricator or resin manufacturer is making material selection)_____

4.1 Description of process function and process sequence: Not applicable

4.2 Contents:

| Chemical Name | Concentration Max. % | Concentration Min. % | Exposure Time |
|---|---|---|---|
| Potable water | 100 | 100 | Continuous |
| | | | |
| | | | |
| | | | |

4.3 pH range: _____ max. _____ min.

5. Design

5.1 Design conditions:

| | Operating | Design |
|---|---|---|
| Internal pressure | 14 psig | 15 psig |
| External pressure | 0.0 psig | Full vacuum |
| Temperature | 80°F | 140°F |
| Specific gravity | 1.0 | 1.0 |
| Liquid level | Full | Full |



Copyright ASME International
Provided by IHS under license with ASME
No reproduction or networking permitted without license from IHS

Not for Resale

(00)
(b)
(c)

## TABLE M12G-1 USER'S BASIC REQUIREMENTS SPECIFICATION (UBRS) (CONT'D)
## As Required by the Provisions of ASME RTP-1



RTP Edition No._____

UBRS Revision No._____

Wind/seismic/snow code (include edition or year) ASCE-7

Basic wind speed 0 MPH Classification category _____ Exposure _____

Elevation above grade_____ ft Topographic factors _____

Seismic zone 1 Site-specific seismic information (soil type, ground motion coefficients, etc.) _____

Snow load 0 psf

Capacities: Operating Flooded gal Flooded By Fabricator gal

5.2 Mechanical agitator: [ ] Required [ ] Not required

Dead load _____ lb

Static bending moment _____ ft-lb

Dynamic bending moment _____ ft-lb

Torque _____ ft-lb

Horsepower _____ hp

Impeller speed _____ RPM Impeller diameter _____ in.

Number of impellers_____ Foot bearing: [ ] Yes [ ] No

5.3 Heating and cooling:

[ ] Electric panels

[ ] Steam coil

[ ] Steam sparger

[ ] Heat exchanger

[ ] Other _____

5.4 Mechanical and other forces:

[ ] Violent chemical reaction

[ ] Subsurface introduction of gas or vapor

[ ] Subsurface introduction of steam

[ ] Transmitted mechanical load/force

[ ] Impact due to introduction of solids

[ ] Vacuum from pump down (or vessel draining)

[ ] Vacuum from cool down

[x] Other Not applicable

5.5 Corrosion barrier excluded from structural calculations:

[x] Yes

[ ] No

5.6 Declaration of *critical service* (only by User or User's Agent; refer to para. 1-210 of ASME RTP-1):

[ ] Yes

[x] No

6. Designation of Inspector (Review paras. 1-400, 1-430, and 1-440 of ASME RTP-1. It must be recognized that ASME RTP-1 establishes numerous duties for the Inspector, which necessitates that the Inspector be present in the fabrication shop throughout a major portion of the fabrication interval.). Inspector shall be:

[x] Fabricator's Quality Control principal

[ ] User's representative

[ ] Other



Copyright ASME International
Provided by IHS under license with ASME
No reproduction or networking permitted without license from IHS

Not for Resale

# ASME Services

ASME is committed to developing and delivering technical information. At ASME's Information Central, we make every effort to answer your questions and expedite your orders. Our representatives are ready to assist you in the following areas:

ASME Press
*Codes & Standards*
Credit Card Orders
IMechE Publications
Meetings & Conferences
Member Dues Status
Member Services & Benefits
Other ASME Programs
Payment Inquiries
Professional Development
Short Courses
Publications
Public Information
Self-Study Courses
Shipping Information
Subscriptions/Journals/Magazines
Symposia Volumes
Technical Papers

**How can you reach us? It's easier than ever!**

There are four options for making inquiries* or placing orders. Simply mail, phone, fax, or E-mail us and an Information Central representative will handle your request.

*Mail*
**ASME**
22 Law Drive, Box 2900
Fairfield, New Jersey
07007-2900

*Call Toll Free*
**US & Canada:** 800-THE-ASME
(800-843-2763)
**Mexico:** 95-800-THE-ASME
(95-800-843-2763)
**Universal:** 973-882-1167

*Fax—24 hours*
973-882-1717
973-882-5155

*E-Mail—24 hours*
Infocentral@asme.org

* Information Central staff are not permitted to answer inquiries about the technical content of this code or standard. Information as to whether or not technical inquiries are issued to this code or standard is shown on the copyright page. All technical inquiries must be submitted in writing to the staff secretary. Additional procedures for inquiries may be listed within.

Copyright ASME International
Provided by IHS under license with ASME
No reproduction or networking permitted without license from IHS
Not for Resale

# ASME RTP-1-2000
(Revision of ASME RTP-1–1995)

# REINFORCED THERMOSET PLASTIC CORROSION RESISTANT EQUIPMENT

AN AMERICAN NATIONAL STANDARD

The American Society of Mechanical Engineers

Copyright ASME International
Provided by IHS under license with ASME
No reproduction or networking permitted without license from IHS

Not for Resale

The American Society of Mechanical Engineers

AN AMERICAN NATIONAL STANDARD

# REINFORCED THERMOSET PLASTIC CORROSION RESISTANT EQUIPMENT

## ASME RTP-1-2000

(Revision of ASME RTP-1–1995)

Copyright ASME International
Provided by IHS under license with ASME
No reproduction or networking permitted without license from IHS
Not for Resale

AN AMERICAN NATIONAL STANDARD

# ASME RTP-1b–2002

# ADDENDA

to

## ASME RTP-1–2000
## REINFORCED THERMOSET PLASTIC CORROSION RESISTANT EQUIPMENT

THE AMERICAN SOCIETY OF MECHANICAL ENGINEERS
Three Park Avenue • New York, NY 10016

Copyright ASME International
Provided by IHS under license with ASME
No reproduction or networking permitted without license from IHS
Not for Resale

Date of Issuance: January 15, 2003

ASME is the registered trademark of The American Society of Mechanical Engineers.

This code or standard was developed under procedures accredited as meeting the criteria for American National Standards. The Standards Committee that approved the code or standard was balanced to assure that individuals from competent and concerned interests have had an opportunity to participate. The proposed code or standard was made available for public review and comment that provides an opportunity for additional public input from industry, academia, regulatory agencies, and the public-at-large.

ASME does not "approve," " rate," or "endorse" any item, construction, proprietary device, or activity.

ASME does not take any position with respect to the validity of any patent rights asserted in connection with any items mentioned in this document, and does not undertake to insure anyone utilizing a standard against liability for infringement of any applicable letters patent, nor assume any such liability. Users of a code or standard are expressly advised that determination of the validity of any such patent rights, and the risk of infringement of such rights, is entirely their own responsibility.

Participation by federal agency representative(s) or person(s) affiliated with industry is not to be interpreted as government or industry endorsement of this code or standard.

ASME accepts responsibility for only those interpretations of this document issued in accordance with the established ASME procedures and policies, which precludes the issuance of interpretations by individuals.

No part of this document may be reproduced in any form,
in an electronic retrieval system or otherwise,
without the prior written permission of the publisher,
except as otherwise noted on forms contained in this document.

Copyright © 2003 by
THE AMERICAN SOCIETY OF MECHANICAL ENGINEERS
All rights reserved
Printed in U.S.A.

Copyright ASME International
Provided by IHS under license with ASME
No reproduction or networking permitted without license from IHS

Not for Resale

Date of Issuance: March 8, 2002

The 2000 edition of this Standard is being issued with an automatic addenda subscription service. The use of addenda allows revisions made in response to public review comments or committee actions to be published on a regular yearly basis; revisions published in addenda will become effective 6 months after the Date of Issuance of the addenda. The next edition of this Standard is scheduled for publication in 2005.

ASME issues written replies to inquiries concerning interpretations of technical aspects of this Standard. The interpretations will be included with the above addenda service.

Cases. Proposed new and revised Cases, as well as notices of their approval, issued by the RTP Main Committee appear in *Mechanical Engineering.* Once approved, the Cases are published with the next regularly scheduled addenda or edition as a service to the subscribers.

ASME is the registered trademark of The American Society of Mechanical Engineers.

This code or standard was developed under procedures accredited as meeting the criteria for American National Standards. The Standards Committee that approved the code or standard was balanced to assure that individuals from competent and concerned interests have had an opportunity to participate. The proposed code or standard was made available for public review and comment that provides an opportunity for additional public input from industry, academia, regulatory agencies, and the public-at-large.

ASME does not "approve," "rate," or "endorse" any item, construction, proprietary device, or activity.

ASME does not take any position with respect to the validity of any patent rights asserted in connection with any items mentioned in this document, and does not undertake to insure anyone utilizing a standard against liability for infringement of any applicable letters patent, nor assumes any such liability. Users of a code or standard are expressly advised that determination of the validity of any such patent rights, and the risk of infringement of such rights, is entirely their own responsibility.

Participation by federal agency representative(s) or person(s) affiliated with industry is not to be interpreted as government or industry endorsement of this code or standard.

ASME accepts responsibility for only those interpretations of this document issued in accordance with the established ASME procedures and policies, which precludes the issuance of interpretations by individuals.

No part of this document may be reproduced in any form,
in an electronic retrieval system or otherwise,
without the prior written permission of the publisher,
except as otherwise noted on forms contained in this document.

The American Society of Mechanical Engineers
Three Park Avenue, New York, NY 10016-5990

Copyright © 2002 by
THE AMERICAN SOCIETY OF MECHANICAL ENGINEERS
All Rights Reserved
Printed in U.S.A.

Copyright ASME International
Provided by IHS under license with ASME
No reproduction or networking permitted without license from IHS

Not for Resale

# ASME RTP-1b–2002

Following approval by the RTP Committee and ASME, and after public review, this ASME RTP-1b–2002 was approved by the American National Standards Institute on August 14, 2002.

Addenda to the 2000 edition of ASME RTP-1 are issued in the form of replacement pages. Revisions, additions, and deletions are incorporated directly into the affected pages. It is advisable, however, that this page, the Addenda title and copyright pages, and all replaced pages be retained for reference.

## SUMMARY OF CHANGES

This is the second Addenda to be published to ASME RTP-1–2000. The first Addenda was incorporated into the 2000 edition.

Replace or insert the pages listed. Changes given below are identified on the pages by a margin note, **(b)**, placed next to the affected area. Revisions to the 2000 edition are indicated by **(00)**, and previous Addenda changes are indicated by **(a)**. The pages not listed are the reverse sides of the listed pages and contain no changes.

| *Page* | *Location* | *Change* |
|---|---|---|
| iv–ix | Contents | Updated to reflect Addenda |
| 3 | 1-220(a)(3) | Cross-reference corrected by Errata |
| 6 | 1-550(b)(3) | Revised |
| 9 | Table 1-1 | Items 5.1 and 5.2 revised |
| 13–14.1 | 2-100 | Revised |
| | 2-310(b)(2) | Cross-reference deleted by errata |
| | 2-330 | Added |
| | 2A-223(e) | Revised |
| 17 | Table 2A-3 | All entries in fourth and last columns revised |
| | 2A-300(c) | Revised |
| 22, 22.1 | 3A-250 | Revised in its entirety |
| 24–26.1 | 3A-350 | Revised in its entirety |
| | Fig. 3-1 | Retitled and revised |
| | 3A-360 | Added |
| | 3A-460 | Revised |
| | 3A-710 | Nomenclature for $\sigma$ corrected by errata |



Copyright ASME International
Provided by IHS under license with ASME
No reproduction or networking permitted without license from IHS
Not for Resale

| *Page* | *Location* | *Change* |
|---|---|---|
| 31–33 | 4-200 | Revised |
| | 4-530 | Added |
| | 4-800 | Added |
| 46.1 | Fig. 4-13 | Added |
| 53, 53.1 | 6-920(h) | Added |
| 59 | 6-940(f) | Added |
| | 6-950(d) | Revised |
| 60 | 7-300(a)(3) | Revised |
| 113 | M4-400(g) | Revised |
| 125 | Table M6-1 | Items 5.1 and 5.2 revised |
| 143 | Appendix M-10 | ASTM D 4444 added |
| 180 | Table M12G-1 | Items 5.1 and 5.2 revised |
| 188.1, 188.2 | Appendix M-13 | Added |
| 302, 303 | NM12-200 | Nomenclature for $\sigma_{bm}$ added by errata |
| 304, 305 | NM12-400 | Equation for $T_{min}$ corrected by errata |
| 329.1–329.3 | Appendix NM-15 | Added |

**SPECIAL NOTE:**

The interpretations to ASME RTP-1–2000 are included in this Addenda as a separate section for the user's convenience.



Copyright ASME International
Provided by IHS under license with ASME
No reproduction or networking permitted without license from IHS
Not for Resale

# CONTENTS


| | | | |
|---|---|---|---|
| Foreword | | | x |
| Statements of Policy | | | xi |
| Standards Committee Roster | | | xiii |
| RTP-1–2000 and RTP-1a–2001 Summary of Changes | | | xv |
| Introduction | | | 1 |
| **Part 1** | **General Requirements** | | 2 |
| | 1-100 | Introduction | 2 |
| | 1-200 | User's Basic Requirements Specification | 3 |
| | 1-300 | Fabricator's Design Report | 4 |
| | 1-400 | Inspection | 4 |
| | 1-500 | Fabricator's Quality Control Program | 5 |
| **Part 2** | **Materials** | | 13 |
| | 2-100 | Scope | 13 |
| | 2-200 | Laminate Compositions | 13 |
| | 2-300 | Materials | 13 |
| | Subpart 2A | Requirements for Representative Flat Laminates | 14 |
| | 2A-100 | Introduction | 14 |
| | 2A-200 | Laminate Requirements | 14 |
| | 2A-300 | Requirements for Physical and Mechanical Properties | 15 |
| | 2A-400 | Test Methods | 17 |
| | 2A-500 | Records | 18 |
| | 2A-600 | Additional Standard Laminate Compositions for Subpart 2A | 18 |
| | Subpart 2B | Requirements for Laminates Developed Using the Lamination Analysis Method | 18 |
| | 2B-100 | Laminate Composition | 18 |
| | 2B-200 | Requirements for Physical and Mechanical Properties | 19 |
| | 2B-300 | Test Methods | 19 |
| | 2B-400 | Records | 19 |
| | Subpart 2C | Permissible Tolerances for Laminate Thickness Variation | 19 |
| | 2C-100 | Tolerance for Average Spot Thickness | 19 |
| | 2C-200 | Tolerance for Average Thickness of a Major Part | 19 |
| | 2C-300 | Exceptions | 19 |
| **Part 3** | **Design** | | 20 |
| | 3-100 | Scope | 20 |
| | 3-200 | General | 20 |
| | Subpart 3A | Design by Rules | 20 |
| | 3A-100 | Loadings | 20 |
| | 3A-200 | Design for Total Internal Pressure | 21 |
| | 3A-300 | Design for External Pressure | 23 |
| | 3A-400 | Seismic, Wind, and Snow Loadings | 26 |
| | 3A-500 | Large Diameter RTP Equipment Body Flanges | 26 |
| | 3A-600 | Vessels Supported by Shell Attachments | 26 |




Copyright ASME International
Provided by IHS under license with ASME
No reproduction or networking permitted without license from IHS
Not for Resale

| | | | |
|---|---|---|---|
| | 3A-700 | Reinforcement of Circular Openings | 26.1 |
| | 3A-800 | Secondary Bond Shear Stress | 27 |
| | Subpart 3B | Design by Stress Analysis | 27 |
| | 3B-100 | Introduction | 27 |
| | 3B-200 | Design Acceptability | 27 |
| | 3B-300 | Loading | 29 |
| | 3B-400 | Design | 29 |
| | 3B-500 | Stress Criteria | 29 |
| | 3B-600 | External Pressure | 30 |
| | 3B-700 | Attachments | 30 |
| **Part 4** | **Fabrication** | | 31 |
| | 4-100 | Scope | 31 |
| | 4-200 | Large Diameter Body Flanges | 31 |
| | 4-300 | Shell Joints | 31 |
| | 4-400 | Flanged Nozzles | 32 |
| | 4-500 | Manways | 32 |
| | 4-600 | Reinforcement of Cutouts | 33 |
| | 4-700 | Tolerances | 33 |
| | 4-800 | Balsa Wood Cored Plates | 33 |
| **Part 5** | **Overpressure Protection** | | 48 |
| | 5-100 | Basis for Design | 48 |
| | 5-200 | Protection Against Overpressure | 48 |
| | 5-300 | Type of Overpressure Protection | 48 |
| | 5-400 | Location of Overpressure Protection Devices | 48 |
| | 5-500 | Installation Practices | 48 |
| | 5-600 | Overpressure Device Set Pressure | 48 |
| | 5-700 | Relief Device Sizing | 48 |
| | 5-800 | Discharge Lines From Pressure Relief Devices | 49 |
| | 5-900 | Responsibility for Design and Selection | 49 |
| **Part 6** | **Inspection and Tests** | | 50 |
| | 6-100 | Scope | 50 |
| | 6-200 | Inspector | 50 |
| | 6-300 | Inspection and Responsibility | 50 |
| | 6-400 | Conditions for Inspection | 51 |
| | 6-500 | Equipment Design | 51 |
| | 6-600 | Materials | 51 |
| | 6-700 | Fabrication | 51 |
| | 6-800 | Fabricator's Quality Assurance Program | 51 |
| | 6-900 | Final Inspection | 51 |
| **Part 7** | **Shop Qualification** | | 60 |
| | 7-100 | Scope | 60 |
| | 7-200 | General | 60 |
| | 7-300 | Fabricator's Facilities and Equipment | 60 |
| | 7-400 | Personnel | 60 |
| | 7-500 | Quality Control Program, Document Handling, and Record System | 60 |
| | 7-600 | Demonstration of Capability | 60 |




Copyright ASME International
Provided by IHS under license with ASME
No reproduction or networking permitted without license from IHS
Not for Resale

| | | | |
|---|---|---|---|
| | 7-700 | Minimum Test Values From Demonstration Laminates | 63 |
| | 7-800 | Demonstration Vessel | 64 |
| | 7-900 | Identifying Demonstration Laminates | 64 |
| | 7-1000 | Laboratory Test and Test Report Requirements for Demonstration Laminates | 64 |
| **Part 8** | **Accreditation** | | 66 |
| | 8-100 | Scope | 66 |
| | 8-200 | General | 66 |
| | 8-300 | Accreditation for ASME RTP-1 Fabricators | 66 |
| | 8-400 | ASME RTP-1 Certificate of Authorization for Vessel Fabricators | 67 |


**Figures**


| | | |
|---|---|---|
| 1-1 | Official ASME RTP-1 Symbol | 6 |
| 3-1 | Toriconical Head Dimensions | 25 |
| 4-1 | Fabrication Tolerances | 34 |
| 4-2 | Torispherical Heads | 35 |
| 4-3 | Flat-Bottom Tank Corner Detail | 36 |
| 4-4 | Stiffener Detail | 38 |
| 4-5 | Joint Arrangement | 39 |
| 4-6 | Nozzle Flange Dimensions for Class 150 Bolting | 40 |
| 4-7 | Flanged Nozzle Lay-Up Method | 41 |
| 4-8 | Flush Nozzle Installation | 42 |
| 4-9 | Penetrating Nozzle Installation | 43 |
| 4-10 | Nozzle Installation and Cutout Reinforcement Location Alternate | 44 |
| 4-11 | Nozzle Gussets | 45 |
| 4-12 | Flange Tolerances | 46 |
| 4-13 | Flat Cored Bottom Knuckle Detail | 46.1 |
| 7-1 | Dimensions for Tensile Test Specimen | 65 |


**Tables**


| | | |
|---|---|---|
| 1-1 | User's Basic Requirements Specification (UBRS) | 7 |
| 1-2 | Fabricator's Data Report | 11 |
| 1-3 | Fabricator's Partial Data Report | 12 |
| 2A-1 | Standard Laminate Composition Type I | 15 |
| 2A-2 | Standard Laminate Composition Type II | 16 |
| 2A-3 | Minimum Values of Flat Laminates | 17 |
| 4-1 | Shear Bond Length | 46 |
| 4-2 | Typical Dimensions of Manways | 47 |
| 4-3 | Flange Flatness Tolerance | 47 |
| 6-1 | RTP Visual Inspection Acceptance Criteria | 55 |
| 7-1 | Required Resins and Acceptable Fabrication Processes for Demonstration Laminates | 61 |
| 7-2 | Dimensional Requirements for Hand Lay-Up and Spray-Up Demonstration Laminates | 62 |
| 7-3 | Reinforcement Requirements for Hand Lay-Up and Spray-Up Demonstration Laminates | 63 |


**Mandatory Appendices**


| | | |
|---|---|---|
| M-1 | Reinforcement Materials Receiving Procedures | 69 |
| M-2 | Matrix Materials Receiving Procedures | 79 |




Copyright ASME International
Provided by IHS under license with ASME
No reproduction or networking permitted without license from IHS

Not for Resale

M-3 Calculation of Physical and Mechanical Properties Using Lamination Analysis Method ..... 89
M-4 Quality Control Program ..... 112
M-5 Qualification of Laminators and Secondary Bonders ..... 114
M-6 Demonstration Vessel ..... 121
M-7 Repair Procedures ..... 130
M-8 Acoustic Emission Examination ..... 135
M-9 Glossary ..... 137
M-10 Reference Documents ..... 142
M-11 Submittal of Technical Inquiries to the Reinforced Thermoset Plastic Corrosion Resistant Equipment Committee ..... 144
M-12 Dual Laminate Vessels ..... 146
M-13 Balsa Wood Receiving and Inspection Procedures ..... 188.1

## Figures

M3-1 Random Glass Fiber ..... 96
M3-2 Random Glass Fiber ..... 97
M3-3 Oriented Glass Fiber — 30 Vol. % ..... 98
M3-4 Oriented Glass Fiber — 30 Vol. % ..... 99
M3-5 Oriented Glass Fiber — 40 Vol. % ..... 100
M3-6 Oriented Glass Fiber — 40 Vol. % ..... 101
M3-7 Oriented Glass Fiber — 50 Vol. % ..... 102
M3-8 Oriented Glass Fiber — 50 Vol. % ..... 103
M3-9 Oriented Glass Fiber — 60 Vol. % ..... 104
M3-10 Oriented Glass Fiber — 60 Vol. % ..... 105
M3-11 Oriented Glass Fiber — 70 Vol. % ..... 106
M3-12 Oriented Glass Fiber — 70 Vol. % ..... 107
M3-13 Poisson's Ratios — 10 to 70 Vol. % ..... 108
M3-14 Moment Resultants ..... 110
M3-15 In-Plane Force Resultants ..... 110
M3-16 Geometry of an *n*-Layered Laminate ..... 111
M3-17 Coordinate Systems ..... 111
M5-1 Pipe Test Piece ..... 115
M5-2 Secondary Bond Test Assembly ..... 116
M5-3 Secondary Bond Test Specimen ..... 117
M6-1 ASME RTP-1 Demonstration Vessel ..... 127
M6-2 Post-Test Sectioning of Vessel for Final Inspection and Display ..... 128
M6-3 Witness of Hydrotest of ASME RTP-1 Demonstration Vessel ..... 129
M12C-1 Support Ledges Showing Recommended Weld Locations Away From Thermoformed Bends ..... 161
M12D-1 Maximum Offset Allowed for Joints Between Sheets With Different Thicknesses ..... 163
M12D-2 Visual Features of Hot Gas Welds ..... 165
M12D-3 Illustrations of Flow Lines ..... 165
M12D-4 Heat Affected Zone Patterns ..... 166
M12D-5 Butt Fusion Welds Showing Melt Flow Lines ..... 167
M12D-6 Nozzle Construction for Penetrating Nozzle ..... 169
M12D-7 Nozzle and Manway Constructions ..... 170
M12D-8 Bottom Nozzle Constructions ..... 171
M12D-9 Typical Dip Pipe Guide Bracket Constructions ..... 172
M12G-1 Dual Laminate Demonstration Vessel ..... 177



Copyright ASME International
Provided by IHS under license with ASME
No reproduction or networking permitted without license from IHS
Not for Resale

M12G-2 Post-Test Sectioning of Dual Laminate Demonstration Vessel for Final Inspection and Display ..... 182

## Tables

M1A-1 Veil and Mat Reinforcement Log Sheet ..... 70
M1B-1 Roving Reinforcement Log Sheet ..... 72
M1C-1 Fabric Reinforcement Log Sheet ..... 75
M1D-1 Milled Fiber Reinforcement Log Sheet ..... 78
M2C-1 Recommended Numerical Standards for Comparator Viscosity Tubes ..... 82
M2F-1 Resin Log Sheet ..... 85
M2F-2 Curing Agents Log Sheet ..... 86
M2G-1 Common Additives Log Sheet ..... 87
M3-1 Glass Volume Fraction and Density ..... 109
M3-2 Layer Properties ..... 109
M3-3 Products of Layer Properties ..... 109
M3-4 Summary Table of Laminate Properties ..... 110
M5-1 Laminator Qualification Report ..... 119
M5-2 Secondary Bonder Qualification Report ..... 120
M6-1 User's Basic Requirements Specification (UBRS) ..... 123
M8-1 Acceptance Criteria ..... 136
M12B-1 ASTM Specifications for Thermoplastic Materials ..... 147
M12B-2 Typical Thermoplastic Properties ..... 148
M12B-3 Thermoplastic Sheet or Roll Receiving Log ..... 150
M12B-4 Thermoplastic Sheet Visual Inspection Acceptance Criteria ..... 151
M12B-5 Welding Material Receiving Log ..... 153
M12B-6 Bonding Resin Receiving Log ..... 155
M12B-7 Conductive Material Receiving Log ..... 158
M12B-8 Thermoplastic Shape Receiving Log ..... 159
M12D-1 Visual Weld Defects ..... 164
M12E-1 Lining Visual Inspection Acceptance Criteria ..... 174
M12G-1 User's Basic Requirements Specification (UBRS) ..... 178
M12H-1 Welder Qualification Report ..... 184
M12H-2 Weld Strength Requirements ..... 186
M13-1 Balsa Wood Core Inspection Sheet ..... 188.2

## Nonmandatory Appendices

NM-1 Design Examples ..... 189
NM-2 Design of Integral Body Flanges ..... 208
NM-3 Seismic, Wind, and Snow Loadings ..... 224
NM-4 Hold-Down Lug Design ..... 234
NM-5 Ring Support of Vessels ..... 244
NM-6 Example of a Fabricator's Quality Control Program ..... 259
NM-7 Acceptance Inspection by User's Inspector ..... 284
NM-8 Handling and Shipping ..... 291
NM-9 Installation of RTP Vessels ..... 294
NM-10 Requirements and Responsibilities of User (or User's Agent), Fabricator, and Inspector ..... 297
NM-11 Design for 250 lb Concentrated Load on a Torispherical Head ..... 300
NM-12 FRP Flange Design ..... 302
NM-13 Stress Analysis Methods ..... 306
NM-14 ISO 9001 Quality Control System ..... 323
NM-15 Flat Cored Plate Design ..... 329.1



Copyright ASME International
Provided by IHS under license with ASME
No reproduction or networking permitted without license from IHS
Not for Resale

## Figures


| | | |
|---|---|---|
| NM1-1 | Toriconical Head | 190 |
| NM1-2 | Stress Intensity in a Toriconical Head | 192 |
| NM1-3 | Horizontal Tank | 193 |
| NM1-4 | Pressure Distribution | 194 |
| NM1-5 | Saddle Reaction | 195 |
| NM1-6 | Stress Along Top Meridian, Initial Try | 197 |
| NM1-7 | Stress Along 45 Deg Meridian, Initial Try | 198 |
| NM1-8 | Stress Along 90 Deg Meridian, Initial Try | 199 |
| NM1-9 | Stress Along 135 Deg Meridian, Initial Try | 200 |
| NM1-10 | Stress Along Bottom Meridian, Initial Try | 201 |
| NM1-11 | Stress Along Top Meridian, Final Try | 203 |
| NM1-12 | Stress Along 45 Deg Meridian, Final Try | 204 |
| NM1-13 | Stress Along 90 Deg Meridian, Final Try | 205 |
| NM1-14 | Stress Along 135 Deg Meridian, Final Try | 206 |
| NM1-15 | Stress Along Bottom Meridian, Final Try | 207 |
| NM2-1 | Design of Flat-Face Integral Body Flanges With Full-Face Gaskets | 211 |
| NM2-2 | Values of $T$, $U$, $Y$, and $Z$ (Terms Involving $K$) | 213 |
| NM2-3 | Values of $F$ (Integral Flange Factors) | 218 |
| NM2-4 | Values of $V$ (Integral Flange Factors) | 219 |
| NM2-5 | Values of $f$ (Hub Stress Correction Factors) | 220 |
| NM2-6 | Design of Flat-Face Integral Body Flanges With Full-Face Gaskets (Example Calculation — 72 in. Flange at 30 psi) | 221 |
| NM3-1 | Mass Fractions for Fixed and Sloshing Contents | 230 |
| NM3-2 | Centroidal Distances for Fixed and Sloshing Contents | 230 |
| NM3-3 | Sloshing Period as a Function of $D$ (ft) and Aspect Ratio $D/H$ | 231 |
| NM3-4 | Shear Stress Parameter $C_s$ | 233 |
| NM4-1 | Wound-On Hold-Down Lug | 235 |
| NM4-2A | Secondary Bonded Hold-Down Lug, Type A | 236 |
| NM4-2B | Secondary Bonded Hold-Down Lug, Type B | 237 |
| NM4-3 | Moment Coefficient $M_L$ | 238 |
| NM4-4 | Uplift Coefficient $P_G$ | 238 |
| NM4-5 | Recommended Hold-Down Clip | 239 |
| NM5-1 | Lug | 249 |
| NM5-2 | Lugs on Band | 250 |
| NM5-3 | Ring Support of Vessels | 251 |
| NM5-4 | Moment Coefficient $M_L$ | 252 |
| NM5-5 | Geometric Quantities | 253 |
| NM5-6 | Example Cross Section | 254 |
| NM5-7 | Split-Ring Flange | 255 |
| NM5-8 | Ring Design Chart for Three Lugs | 256 |
| NM5-9 | Ring Design Chart for Four Lugs | 257 |
| NM5-10 | Ring Design Chart for Eight Lugs | 258 |
| NM6-1 | Organization Chart | 262 |
| NM7-1 | Recommended Fabrication Tolerances | 289 |
| NM8-1 | Lifting Vessel With Spreader Bar | 291 |
| NM8-2 | Strongback for Lifting | 292 |
| NM8-3 | Use of Strongbacks | 292 |
| NM9-1 | Flat-Face Valve Flange to Flat-Face RTP Nozzle Flange and Full-Face Gasket | 295 |
| NM9-2 | Raised-Face Valve Flange to Flat-Face RTP Nozzle Flange With Filler Ring and Full-Face Gasket | 295 |




Copyright ASME International
Provided by IHS under license with ASME
No reproduction or networking permitted without license from IHS
Not for Resale

NM9-3 Flange Bolt Tightening ..... 296
NM10-1 RTP-1 Flowchart ..... 298
NM11-1 Stress Function ..... 301
NM12-1 Flange Dimensioning Details ..... 302
NM12-2 Flange Loading Conditions ..... 303
NM13A-1 Sign Conventions for Cylindrical Segments ..... 307
NM13B-1 Sign Conventions for Spherical Segments ..... 310
NM13C-1 Sign Conventions for Flat Plates ..... 313
NM13C-2 Simply Supported Flat Plate ..... 313
NM13C-3 Edge Loads on Flat Plates ..... 314
NM13C-4 Flat Plate Vessel Head ..... 314
NM13C-5 Flat Plate to Cylinder Joint ..... 314
NM13D-1 Example Pressure Vessel ..... 317
NM13D-2 Forces and Moments in Pressure Vessel Example ..... 317
NM13D-3 Hemispherical Head ..... 318
NM13D-4 Cylindrical Shell ..... 318
NM13D-5 Flat Plate Head ..... 319
NM15-1 Equivalent Solid and Cored Plates ..... 329.2

**Tables**

NM1-1 Example 1, Vessel With a Toriconical Lower Head ..... 194
NM1-2 Wall Thickness in a Horizontal Tank ..... 202
NM2-1 Typical Body Flange Dimensions and Recommended Bolt Torque Values for RTP Body Flanges ..... 212
NM2-2 Values of *T*, *Z*, *Y*, and *U* (Factors Involving *K*) ..... 214
NM2-3 Body Flange Design Using Full-Face Gaskets, Maximum Stress Less Than 3,000 psi — Type II Laminates ..... 222
NM2-4 Body Flange Design Using Full-Face Gaskets, Maximum Stress Less Than 1,800 psi — Type I Laminates ..... 223
NM6-1 Mixing Data Sheet ..... 273
NM6-2 Component Data Sheet ..... 274
NM6-3 Document Control Sheet ..... 275
NM6-4 Document Distribution List ..... 276
NM6-5 Document Preparation and Distribution Responsibility ..... 277
NM6-6 Nonconformity Correction Report ..... 278
NM6-7 QC Manual Master Revision List ..... 280
NM7-1 RTP Equipment Inspection Requirements ..... 285
NM7-2 Inspection Checklist for RTP Equipment ..... 286
NM13C-1 Multiplying Factors ..... 315

**SI Units** ..... 330

**Index** ..... 333



(b)

Copyright ASME International
Provided by IHS under license with ASME
No reproduction or networking permitted without license from IHS
Not for Resale

# FOREWORD

The function of the Reinforced Thermoset Plastic (RTP) Corrosion Resistant Equipment Committee is to establish rules of safety governing the design, fabrication, and inspection during construction of such equipment, and to interpret these rules when questions arise regarding their intent. In formulating the rules, the Committee considers the needs of users, material manufacturers, fabricators, and inspectors of this equipment. The objective of the rules is to afford protection of life and property, and to provide a margin for deterioration in service so as to give a reasonably long safe period of usefulness. Advancements in design and material, and the evidence of experience, are recognized.

The rules established by the Committee are not to be interpreted as approving, recommending, or endorsing any proprietary or specific design or as limiting in any way the Fabricator's freedom to choose any method of design or any form of construction that conforms to the rules of this Standard.

This Standard contains mandatory requirements, specific prohibitions, and nonmandatory guidance for materials, design, fabrication, examination, inspection, testing, certification, and pressure-relief activities. This Standard does not address all aspects of these activities and those aspects that are not specifically addressed should not be considered prohibited. This Standard is not a design handbook and cannot replace education, experience, and the use of engineering judgment. The phrase *engineering judgment* refers to technical judgments made by knowledgeable designers experienced in the application of this Standard. Engineering judgments must be consistent with the philosophy of this Standard and such judgments must never be used to overrule mandatory requirements or specific prohibitions of this Standard.

The Committee meets regularly to consider requests for interpretations and revisions of the rules, and to develop new rules as dictated by technological development. Inquiries must be addressed to the Secretary in writing and must give full particulars in order to receive consideration and a written interpretation. Proposed revisions to this Standard resulting from inquiries will be presented to the Main Committee for appropriate action.

Proposed revisions to this Standard approved by the Committee are submitted to the American National Standards Institute and published in *Mechanical Engineering* to invite comments from all interested persons. After the allotted time for public review and final approval by ASME, revisions are published in Addenda to this Standard. They may be used beginning with the date of issuance shown on the Addenda. Revisions become mandatory as requirements 6 months after such date of issuance.

The first edition of this Standard was issued on December 31, 1989. The 2000 edition of this Standard contains revisions in addition to the 1995 Edition and its Addenda.

Requests for interpretations or suggestions for revision should be sent to the Secretary, RTP Committee. The American Society of Mechanical Engineers, Three Park Avenue, New York, NY 10016-5990.



Copyright ASME International
Provided by IHS under license with ASME
No reproduction or networking permitted without license from IHS
Not for Resale

# STATEMENT OF POLICY ON THE USE OF ASME MARKS AND CODE AUTHORIZATION IN ADVERTISING

ASME has established procedures to authorize qualified organizations to perform various activities in accordance with the requirements of the ASME codes and standards. It is the aim of the Society to provide recognition of organizations so authorized. An organization holding authorization to perform various activities in accordance with the requirements of the codes and standards may state this capability in its advertising literature.

Organizations that are authorized to use Symbol Stamps for making items or constructions that have been constructed and inspected in compliance with ASME codes and standards are issued Certificates. It is the aim of the Society to maintain the standing of the Symbol Stamps for the benefit of the users, the enforcement jurisdictions, and the holders of the Stamps who comply with all requirements.

Based on these objectives, the following policy has been established on the usage in advertising of facsimiles of the symbols, certificates, and references to codes or standards construction. The American Society of Mechanical Engineers does not "approve," "certify," "rate," or "endorse" any item, construction, or activity and there shall be no statements or implications that might so indicate. An organization holding a Symbol Stamp and/or a Certificate may state in advertising literature that items, constructions, or activities "are built (produced or performed) or activities conducted in accordance with the requirements of the applicable ASME code or standard."

The ASME Symbol Stamp shall be used only for stamping and nameplates as specifically provided in the code or standard. However, facsimiles may be used for the purpose of fostering the use of such construction. Such usage may be by an association or a society, or by a holder of a Symbol Stamp who may also use the facsimile in advertising to show that clearly specified items will carry the symbol. General usage is permitted only when all of a manufacturer's items are constructed under the rules of the applicable code or standard.

The ASME logo, which is the cloverleaf with the letters ASME within, shall not be used by any organization other than ASME.

# STATEMENT OF POLICY ON THE USE OF ASME MARKING TO IDENTIFY MANUFACTURED ITEMS

The ASME codes and standards provide rules for the construction of various items. These include requirements for materials, design, fabrication, examination, inspection, and stamping. Items constructed in accordance with all of the applicable rules of ASME are identified with the official Symbol Stamp described in the governing code or standard.



Copyright ASME International
Provided by IHS under license with ASME
No reproduction or networking permitted without license from IHS
Not for Resale

Markings such as "ASME," "ASME Standard," or any other marking including "ASME" or the various Symbol Stamps shall not be used on any item that is not constructed in accordance with all of the applicable requirements of the code or standard.

Items shall not be described on ASME Data Report Forms nor on similar forms referring to ASME that tend to imply that all requirements have been met when, in fact, they have not been met. Data Report Forms covering items not fully complying with ASME requirements shall not refer to ASME or they shall clearly identify all exceptions to the ASME requirements.

ASME's role as an accrediting rather than certifying organization shall be made clear on stampings, labels, or nameplate markings by inclusion of the words:

Certified by _____.
(Fabricator)



--`,,,`,,,-`-`,,`,,`,`,,`---

Copyright ASME International
Provided by IHS under license with ASME
No reproduction or networking permitted without license from IHS

Not for Resale

# COMMITTEE ON REINFORCED THERMOSET PLASTIC (RTP) CORROSION RESISTANT EQUIPMENT

(The following is the roster of the Committee as of August 15, 2001.)

## OFFICERS

**M. W. Arthur,** *Chair*
**H. N. Marsh, Jr.,** *Vice Chair*
**A. J. Roby,** *Secretary*

## COMMITTEE PERSONNEL

**R. E. Anderson,** Vetrotex Certainteed, Wichita Falls, Texas
**M. W. Arthur,** An-Cor Industrial Plastics, Inc., North Tonawanda, New York
**J. L. Bustillos,** Dow Chemical USA, Freeport, Texas
**P. J. Conlisk,** Conlisk Engineering Mechanics, Inc., St. Louis, Missouri
**L. Craigie,** Composite Fabricators Association, Arlington, Virginia
**R. B. Davis,** Ershigs Inc., Bellingham, Washington
**C. R. Green,** Fluor Daniel, Greenville, South Carolina
**J. M. Lassandro,** RL Industries, Inc., Schuylkill Haven, Pennsylvania
**R. J. Lewandowski,** Timonium, Maryland
**S. R. Linnemann,** RL Industries, Inc., Fairfield, Ohio
**H. N. Marsh, Jr.,** Granville, Ohio
**G. Nicholson,** Viatec Inc., Hastings, Michigan
**E. Redko,** FMC Corp., Princeton, New Jersey
**A. J. Roby,** The American Society of Mechanical Engineers, New York, New York
**S. J. Scott,** Westerville, Ohio
**B. F. Shelley,** Dupont Engineering Co., Wilmington, Delaware
**O. W. Siebert,** Siebert Materials Engineering Inc., Ballwin, Missouri

## SUBCOMMITTEE ON ACCREDITATION

**J. L. Bustillos,** *Chair,* Dow Chemical USA, Freeport, Texas
**B. F. Shelley,** *Vice Chair,* Dupont Engineering Co., Wilmington, Delaware
**M. W. Arthur,** An-Cor Industrial Plastics, Inc., North Tonawanda, New York
**J. L. Devilbiss,** Reichhold, Inc., Bellingham, Washington
**C. R. Green,** Fluor Daniel, Greenville, South Carolina
**D. L. Keeler,** Viatec Inc., Hastings, Michigan
**F. Z. Krmpotich,** Bellingham, Washington
**R. J. Lewandowski,** Timonium, Maryland
**S. R. Linnemann,** RL Industries, Inc., Fairfield, Ohio
**H. N. Marsh, Jr.,** Granville, Ohio
**E. Redko,** FMC Corp., Princeton, New Jersey
**P. J. Conlisk,** *Alternate,* Conlisk Engineering Mechanics, Inc., St. Louis, Missouri
**L. Craigie,** *Alternate,* Composite Fabricators Association, Arlington, Virginia
**R. B. Davis,** *Alternate,* Ershigs Inc., Bellingham, Washington
**J. L. Fisher,** *Alternate,* FMC Corp., Baltimore, Maryland
**P. R. Khaladkar,** *Alternate,* E. I. du Pont de Nemours & Co., Inc., Wilmington, Delaware
**J. M. Lassandro,** *Alternate,* RL Industries, Inc., Schuylkill Haven, Pennsylvania
**R. Newbold,** *Alternate,* RL Industries, Inc., Fairfield, Ohio
**B. E. Riseborough,** *Alternate,* Replacom Engineering, Caledon East, Ontario, Canada
**N. D. Saliagas,** *Alternate,* Fluor Daniel, Greenville, South Carolina
**J. E. Vacek,** *Alternate,* Dow Chemical USA, Freeport, Texas



Copyright ASME International
Provided by IHS under license with ASME
No reproduction or networking permitted without license from IHS
Not for Resale

## SUBCOMMITTEE ON DESIGN AND FABRICATION

**B. F. Shelley,** *Chair,* Dupont Engineering Co., Wilmington, Delaware
**M. W. Arthur,** An-Cor Industrial Plastics, Inc., North Tonawanda, New York
**J. L. Bustillos,** Dow Chemical USA, Freeport, Texas
**P. J. Conlisk,** Conlisk Engineering Mechanics, Inc., St. Louis, Missouri
**J. K. Covey,** Plas-Tanks Industries Inc., Hamilton, Ohio
**M. Galasso,** Norwest Design Associates, Bellingham, Washington
**J. J. Gray,** Augusta Fiberglass, Blackville, South Carolina
**C. R. Green,** Fluor Daniel, Greenville, South Carolina
**B. Hebb,** Reinforced Plastic Systems, Mahone Bay, Nova Scotia, Canada
**D. L. Keeler,** Viatec Inc., Hastings, Michigan
**F. Z. Krmpotich,** Bellingham, Washington
**A. L. Newberry,** Femech Engineering, Harrison, Arkansas
**R. Newbold,** RL Industries, Inc., Fairfield, Ohio
**E. Redko,** FMC Corp., Princeton, New Jersey
**B. E. Riseborough,** Replacom Engineering, Caledon East, Ontario, Canada
**V. Sanchez,** Harrison, Arkansas
**Y. L. Yin,** Fluor Daniel Inc., Sugar Land, Texas

## SUBCOMMITTEE ON DUAL LAMINATES

**S. R. Linnemann,** *Chair,* RL Industries, Inc., Fairfield, Ohio
**D. Chandler,** Engiplast Inc., Gatesville, Texas
**P. Habib,** CPF Dualam Inc., Montreal, Quebec, Canada
**N. L. Hall,** E. I. du Pont de Nemours & Co., Inc., Houston, Texas
**T. Hutton,** Elf Atochem North America Inc., Wetmore, Colorado
**G. McCuaiag,** Prolite Plastics Ltd., Port Coquitlam, British Columbia, Canada
**B. Merklinghaus,** Vycom, Ocean Township, New Jersey
**R. C. Talbot,** Columbus, Ohio
**J. E. Vacek,** Dow Chemical USA, Freeport, Texas
**L. Y. Woo,** Fabricated Plastics Ltd., Maple, Ontario, Canada

## SUBCOMMITTEE ON EDITORIAL

**H. N. Marsh, Jr.,** *Chair,* Granville, Ohio

## SUBCOMMITTEE ON MATERIAL QUALITY ASSURANCE

**R. B. Davis,** *Chair,* Ershigs Inc., Bellingham, Washington
**R. E. Anderson,** Vetrotex Certainteed, Wichita Falls, Texas
**J. V. Berg,** Occidental Chemical Co., New Castle, Delaware
**S. L. Brown,** RL Industries, Inc., Fairfield, Ohio
**L. Craigie,** Composite Fabricators Association, Arlington, Virginia
**R. A. Crawford,** Troy Manufacturing Inc., Henderson, Texas
**J. L. Devilbiss,** Reichhold, Inc., Bellingham, Washington
**J. L. Fisher,** FMC Corp., Baltimore, Maryland
**J. M. Lassandro,** RL Industries, Inc., Schuylkill Haven, Pennsylvania
**R. J. Lewandowski,** Timonium, Maryland
**A. Lopez,** Dow Chemical USA, Freeport, Texas
**H. N. Marsh, Jr.,** Granville, Ohio
**R. D. Martens,** Reichhold Chemicals Inc., Research Triangle Park, North Carolina
**G. Nicholson,** Viatec Inc., Hastings, Michigan
**D. J. Pinell,** Commercial Union Insurance Co., Heber Springs, Arkansas
**J. R. Richter,** Tankinetics, Inc., Harrison, Arkansas
**S. J. Scott,** Westerville, Ohio
**F. E. Templeton,** Augusta Fiberglass, Blackville, South Carolina



Copyright ASME International
Provided by IHS under license with ASME
No reproduction or networking permitted without license from IHS
Not for Resale

# ASME RTP-1–2000 and ASME RTP-1a–2001

Following approval by the RTP Committee and ASME, and after public review, ASME RTP-1–2000 and ASME RTP-1a–2001 were approved by the American National Standards Institute on December 20, 2000 and October 17, 2001, respectively.

## SUMMARY OF CHANGES

Changes given below are identified on the pages by the applicable margin note, **(00)** or **(a)**, placed next to the affected area.

| *Page* | *Location* | *Change* |
|---|---|---|
| 2 | 1-130(c) | First paragraph revised |
| 4, 5 | 1-400 | (1) Paragraphs 1-405, 1-410, and 1-420 redesignated as 1-410, 1-430, and 1-440, respectively<br>(2) Subparagraph 1-410(g) revised<br>(3) Subparagraph 1-410(h) added<br>(4) Paragraph 1-420 added |
| | 1-520(b) | First sentence corrected by errata |
| 7–10 | Table 1-1 | Revised in its entirety |
| 11 | Table 1-2 | In Fabricator's Certificate of Compliance, authorized representative corrected by errata to read Certified Individual |
| 12 | Table 1-3 | In Fabricator's Partial Data Report, authorized representative corrected by errata to read Certified Individual |
| 14 | 2A-223(e) | Revised |
| 16 | Table 2A-2 | General Note (d) revised |
| 19 | Subpart 2C | (1) Paragraph 2C-100 heading deleted<br>(2) Paragraphs 2C-110, 2C-120, and 2C-130 redesignated as 2C-100, 2C-200, and 2C-300, respectively |
| 21–23 | 3A-200 | (1) Paragraphs 3A-220 through 3A-260 redesignated as 3A-230 through 3A-270, correspondingly<br>(2) Paragraph 3A-220 added<br>(3) Paragraph 3A-230 revised<br>(4) Subparagraphs 3A-260(a), (b), and (e) revised<br>(5) Subparagraph 3A-260(f) added |
| 24–26 | 3A-330 | Nomenclature revised |



Copyright ASME International
Provided by IHS under license with ASME
No reproduction or networking permitted without license from IHS
Not for Resale

| *Page* | *Location* | *Change* |
|---|---|---|
| | 3A-350 | Added |
| | Fig. 3-1 | Added |
| | 3A-410 | Revised |
| | 3A-460 | Revised |
| 36 | Fig. 4-3 | Sketch (b) replaced by sketches (b-1) and (b-2) |
| 52 | 6-910(b)(7) | Revised |
| 53, 54 | 6-930(d) | Revised in its entirety |
| | 6-930(e) | Subparagraph 6-930(d)(3)(e) redesignated as 6-930(e) |
| 63 | Table 7-3 | Revised |
| 64, 65 | 7-900 | Table 7-4 redesignated as para. 7-900 |
| | 7-1000 | Table 7-5 redesignated as para. 7-1000 |
| 66 | 8-220 | (1) Subparagraphs (b)(5) and (e) revised<br>(2) Subparagraph (f) deleted<br>(3) Subparagraph (g) redesignated as (f) |
| 83 | M2D-500(d) | Corrected by errata |
| 114 | M5-300(b) | Revised |
| 119 | Table M5-1 | Added |
| 120 | Table M5-2 | Table M5-1 redesignated as Table M5-2 and revised in its entirety |
| 123–126 | Table M6-1 | Revised in its entirety |
| 136 | M8-400 | Revised |
| | M8-500 | Revised |
| 142 | Appendix M-10 | First entry revised |
| 178–181 | Table M12G-1 | Revised in its entirety |
| 194 | Fig. NM1-4 | General Note (c) corrected by errata to read cos $\theta$ |
| 224 | NM3-100 | (1) Subparagraph (d) revised<br>(2) Subparagraphs (f) through (k) added |
| 229, 231 | NM3-327 | Equation for $C$ corrected by errata |
| | NM3-328 | Equation for $F_b$ corrected by errata |
| | NM3-329 | Equation for $C$ corrected by errata |
| 238 | Fig. NM4-3 | Fig. NM4-4 redesignated as Fig. NM4-3 |
| | Fig. NM4-4 | Fig. NM4-3 redesignated as Fig. NM4-4 |



Copyright ASME International
Provided by IHS under license with ASME
No reproduction or networking permitted without license from IHS
Not for Resale

| *Page* | *Location* | *Change* |
|---|---|---|
| 262 | Fig. NM6-1 | Chart 2.4 redesignated as Fig. NM6-1 and revised in its entirety |
| 307 | Fig. NM13A-1 | Title added |
| 310 | Fig. NM13B-1 | Title added |
| 313 | Fig. NM13C-1 | Title added |
| | Fig. NM13C-2 | Title added |
| 314 | Fig. NM13C-3 | Title added |
| | Fig. NM13C-4 | Title added |
| | Fig. NM13C-5 | Title added |
| 315 | Table NM13C-1 | Title added |
| 317 | Fig. NM13D-1 | Title added |
| | Fig. NM13D-2 | Title added |
| 318 | Fig. NM13D-3 | Title added |
| | Fig. NM13D-4 | Title added |
| 319 | Fig. NM13D-5 | Title added |
| 331 | List of SI Units | General Note revised |
| 332 | Commonly Used Conversion Factors | General Note (b) revised |

**SPECIAL NOTES:**

(1) Due to the previous deletion of Appendices M-1 and M-4, all the Mandatory Appendices have been redesignated in RTP-1–2000 and the corresponding cross-references have been revised throughout this Standard.

(2) The interpretations to ASME RTP-1 are included as a separate section for the user's convenience.



Copyright ASME International
Provided by IHS under license with ASME
No reproduction or networking permitted without license from IHS
Not for Resale

Copyright ASME International
Provided by IHS under license with ASME
No reproduction or networking permitted without license from IHS
Not for Resale

# INTRODUCTION

## General

The use of reinforced thermoset plastic (RTP) vessels, operating at pressures not exceeding 15 psig external and/or 15 psig internal above any hydrostatic head, that contain corrosive and otherwise hazardous materials, dictates the need for rules and/or stress analysis concerning materials of construction, design, fabrication, quality control, and inspection of such equipment. In developing rules for RTP, the Committee has adapted the principles of rules included in Section VIII, Division 1, of the ASME Boiler and Pressure Vessel Code, wherever they are applicable.

Adaption of standard rules to RTP requires recognition of differences that exist between metallic materials and RTP. These differences are addressed in the remainder of this Introduction.

## Materials and Assembly

In the absence of ASTM standards, RTP laminate specifications (Part 2) have been developed for use with this ASME Standard. These specifications include laminate composition and properties. Laminates (composites) manufactured by contact molding and by filament winding are covered.

These materials of construction are not available in commerce as mill shapes such as sheet and plate for forming and joining by the Fabricator. They are produced in situ on a mandrel or mold by the Fabricator during fabrication of RTP equipment components. Each Fabricator, as part of his or her shop qualification to this Standard, must demonstrate capability to produce laminates meeting the requirements of the laminate specifications.

Assembly of components such as shells, heads, and nozzles requires joining by secondary bonding. This operation involves fit-up, surface preparation, and overwrapping with a laminate of composition equivalent to the laminates being joined. Secondary Bonders must be qualified individually by the procedures detailed in Appendix M-5.

## Design

Design by formulas and by stress analysis are both included in this Standard. Consideration is given both to ultimate strength and to limiting strain. Time and temperature dependence of RTP laminate properties is recognized.

The ultimate stress consideration is required to assure safety against catastrophic failure over a reasonably long term. The design factors of Subparts 3A and 3B include consideration of variability of quality in the labor-intensive fabricating operation. The strain considerations are required to assure long-term operation under cyclic stress (fatigue) without cracking the resin matrix of the composite laminate, thus maintaining maximum corrosion resistance. More than 20 years of successful experience, together with test data, have shown these considerations to be valid.

## Inspection

Reliance is placed on careful auditing of the Fabricator's Quality Control Program and close visual inspection of equipment during fabrication and of finished equipment.



--`,,`,,-`-`,,`,,`,`,,`---

Copyright ASME International
Provided by IHS under license with ASME
No reproduction or networking permitted without license from IHS

Not for Resale

# PART 1
# GENERAL REQUIREMENTS

## 1-100 INTRODUCTION

Part 1 of this Standard defines the requirements that are applicable to all reinforced thermoset plastic corrosion resistant vessels fabricated to this Standard and shall be used in conjunction with the specific requirements in other parts and mandatory appendices of this Standard.

## 1-110 Scope

*(a)* This Standard applies to stationary vessels used for the storage, accumulation, or processing of corrosive or other substances at pressures not exceeding 15 psig external and/or 15 psig internal above any hydrostatic head.

*(b)* In relation to the geometry of vessels, the scope of this Standard shall include the following.

*(1)* Where external piping is to be connected to the vessel:

*(a)* the first threaded joint for screwed connections;

*(b)* the face of the first flange for bolted connections;

*(c)* the vessel side sealing surface for proprietary connections or fittings.

*(2)* The vessel attachment joint when an attachment is made to either the external or internal surface of the vessel.

*(3)* Covers for vessel openings, such as manhole and handhole covers.

*(4)* The vessel side sealing surface for proprietary fittings attached to vessels for which rules are not provided by this Standard, such as gages and instruments.

## 1-120 Exclusions

The following types of reinforced thermoset plastic equipment are excluded from the rules of this Standard:

*(a)* vessels with internal operating pressure in excess of 15 psig;

*(b)* hoods, ducts, and stacks;

*(c)* fans and blowers;

*(d)* vessel internals such as entrainment separators, chevron blades, packing support plates, and liquid distribution plates;

*(e)* pumps;

*(f)* pipe or piping (see ASME B31.3);

*(g)* fully buried underground closed vessels.

## 1-130 Application Limitations

Vessels specified, designed, fabricated, and certified by the Fabricator as conforming to this Standard shall be limited to the following pressure and temperature limits:

*(a) Maximum Internal Pressure*[1]

*(1) With Proof Test of As-Constructed Laminate.* The internal operating pressure, measured at the top of the vessel, shall not be greater than 15 psig.

*(2) Without Proof Test of As-Constructed Laminate.* The internal operating pressure, measured at the top of the vessel, shall not be greater than 2 psig.

*(b) Maximum External Pressure*[1]

*(1) With Proof Test of As-Constructed Laminate.* The limit on external operating pressure is 15 psig.

*(2) Without Proof Test of As-Constructed Laminate.* The limit on external operating pressure is 2 psig.

*(c) Temperature Limits.* The operating temperature shall be limited to a value for which mechanical properties have been determined by the procedures in paras. 2A-300(b) and 2B-200(a), and the chemical resistance has been established by the material selection process identified in Table 1-1, item 3. **(00)**

In general, operating temperatures to 180°F maximum are commonly encountered and a large body of mechanical property and chemical resistance data exists to facilitate design. Applications above 180°F require that the designer recognizes and accounts for possible reduced mechanical properties at the elevated temperature and possibly decreasing mechanical properties with time as a consequence of thermal and chemical exposure. Such elevated temperature applications require special

[1] Refer to para. 6-930(d) for Proof Test requirements.



Copyright ASME International
Provided by IHS under license with ASME
No reproduction or networking permitted without license from IHS

Not for Resale

design attention, and consultation with the resin manufacturer is essential.

## 1-200 USER'S BASIC REQUIREMENTS SPECIFICATION

It is the responsibility of the User, or an Agent acting on his or her behalf, who intends that a vessel be designed, constructed, inspected, tested, and certified to be in compliance with this Standard, to provide or cause to be provided for such vessel a User's Basic Requirements Specification (UBRS). The UBRS shall set forth the intended operating conditions of the vessel to provide the basis for design and shall identify the external environment to which the vessel will be exposed, the intended function of the vessel, mechanical loads imposed on the vessel, specific installation requirements, and specific codes and laws applicable at the location where the vessel will be installed. The User also must specify within the UBRS the type of resin required or define the contents to which the vessel shall be exposed.

See Table 1-1 for User's Basic Requirements Specification.

### 1-210 Service Restrictions

*(a)* When a vessel is to be used in a *critical service,* it shall be the responsibility of the User or the User's designated Agent to declare such in the UBRS.

*(b)* This Standard provides generalized guidelines to help the User or User's Agent in determining when a vessel should be declared to be in *critical service.* However, the User or User's Agent has sole authority and responsibility for such declaration. Any such declaration made is not a function of the scope, requirements, or content of this Standard, or of any firm or individual (other than the User or User's Agent) involved in any part of the process of using or determining proper use of the Standard.

*(c) Critical service* should be declared when the operating environment complies with all of the conditions specified in (1) through (4) below or the condition specified in (5):

*(1)* operating pressure within the vessel is equal to or exceeds ±5 psig;

*(2)* vessel is located in close proximity to areas frequented by personnel on a regular basis such that abrupt failure of the vessel would be likely to threaten the life or health of personnel;

*(3)* substance contained in the vessel is of such nature that if abruptly released it could threaten the life or health of personnel;

*(4)* substance contained is known by the User or User's Agent to degrade the physical strength properties of the RTP laminate at an abnormally high rate; or

*(5)* substance contained is known by the User to be an insidious and extremely poisonous gas or liquid of such a nature that a very small amount of the gas or of the vapor of the liquid mixed or unmixed with air is dangerous to life when inhaled, or of such a nature that a very small amount of the substance in contact with the body may be absorbed and cause a toxic reaction that is dangerous to life. By *insidious* is meant the substance is of such nature that exposure to the substance might result in a discomfort level not sufficient to warn of potentially severe and irreversible damage to an individual's health.

*(d)* Quantities in the system, concentrations, pressure, temperature, the nature of the environment, substance properties such as flammability and toxicity, and the potential for environmental pollution should also be considered by the User or User's Agent in order to determine whether a critical service should be declared.

### 1-220 Critical Service Requirements

*(a)* When a User or User's Agent has declared in the UBRS that a vessel is to be used in *critical service,* the following shall apply.

*(1)* Regardless of operating or design pressure, all vessels declared to be in critical service must be subjected to a Proof Test of the as-constructed laminate. Refer to para. 6-930(d).

*(2)* The vessel shall be specified, fabricated, and inspected to be in full compliance with Level 1, Critically Corrosion Resistant, visual inspection criteria as described in Table 6-1.

*(3)* Design factors of safety for the physical strength properties of the laminate shall be at least 125% of those specified elsewhere in this Standard. Greater design factors may be warranted based on analysis of the expected operating conditions and such factors as are outlined in para. 1-210(d). If so, they shall be specified by the User or User's Agent. **(b)**

*(4)* Acoustic emission testing of RTP vessels has been found useful in identifying major defects. Its use as an additional verification of integrity for vessels to be used in critical service is optional.

*(5)* Postcure of critical service vessels is optional but should be given consideration. Postcure of RTP laminates is known to improve certain mechanical properties of the laminate and reduce residual styrene



Copyright ASME International
Provided by IHS under license with ASME
No reproduction or networking permitted without license from IHS
Not for Resale

content, and may improve the corrosion resistance of the laminate. Other mechanical properties, such as elongation, may be reduced by postcure.

Consultations with the resin manufacturer and Fabricator should be conducted, and where postcure is to be employed, a specification defining procedures, methods, and a time–temperature program shall be specified by the User.

*(b)* Compared to steel, RTP materials have the following characteristics:

*(1)* the long-term effects of chemical and thermal degradation on mechanical properties are less well defined;

*(2)* flammability;

*(3)* limited impact resistance;

*(4)* low ductility that could lead to abrupt rupture due to excess loading;

*(5)* the long-term effects of creep are less well defined.

*(c)* On the basis of (b) above, the following additional safeguards should be carefully considered:

*(1)* location of vessels;

*(2)* guarding against physical damage and abuse;

*(3)* fire protection;

*(4)* prevention of excess loading imposed by attachments or auxiliary equipment;

*(5)* periodic structural and material inspections and tests.

## 1-300 FABRICATOR'S DESIGN REPORT

The Fabricator, or his or her designated agent, shall make design calculations and prepare a Fabricator's Design Report establishing that the design, as shown in the design drawings, complies with the rules of this Standard and the UBRS.

A Professional Engineer, registered in one or more of the states of the United States or provinces of Canada and experienced in the design of RTP vessels, as covered by this Standard, shall certify that the Fabricator's Design Report is in compliance with these rules and the UBRS.

## (00) 1-400 INSPECTION

This Standard requires that specific inspections be carried out by Inspection Personnel experienced in the fabrication of RTP vessels. In addition, other inspections may be carried out as a part of the Fabricator's Quality Control Program. Throughout this Standard, Inspection Personnel are referred to as either inspector(s) (lower case "i"), Inspector(s) (upper case "I"), or Certified Individual(s) (upper case "CI").

A *Certified Individual* is an employee of the Fabricator authorized by ASME to use its marks. The Certified Individual's principal responsibility is to protect the ASME mark by carrying out the duties described in this Standard. He can also be the Inspector.

An *Inspector* is an individual who shall be mutually acceptable to the User and Fabricator, and shall carry out his or her duties in accord with this Standard. An *Inspector's* reporting relationship to management must be independent of the Fabricator's production and marketing groups. See para. 1-430. He or she can also be the Certified Individual or the inspector, but not both.

An *inspector* is an individual engaged in inspection activities during the course of fabrication, usually as a function of quality control. He can be the Inspector but cannot be the Certified Individual.

Arrangements for Inspection Personnel shall be resolved prior to the start of fabrication.

### 1-410 Duties of the Certified Individual

The Certified Individual shall:

*(a)* perform an annual audit to verify that the Fabricator's Quality Assurance System is current and in effective operation;

*(b)* verify that the qualifications of the *Inspector* and *inspector* are in accordance with the Fabricator's Quality Assurance System;

*(c)* verify that corrective actions resulting from ASME audits are properly resolved;

*(d)* verify that corrective actions taken to resolve vessel nonconformities are in accordance with the Fabricator's Quality Assurance Program;

*(e)* verify that the responsibilities and activities of the Inspector are in accordance with the requirements of the Standard;

*(f)* verify that vessels are manufactured by qualified laminators and secondary bonders;

*(g)* sign the Fabricator's Partial Data Report subsequent to completion of all inspections by the Inspector, in the case that only components are being produced;

*(h)* approve the application of the ASME mark by signing the Fabricator's Certificate of Compliance on the Fabricator's Data Report subsequent to completion of all inspections by the Inspector.

### 1-420 Qualifications of the Certified Individual

The Certified Individual shall meet the following qualifications:



Copyright ASME International
Provided by IHS under license with ASME
No reproduction or networking permitted without license from IHS

Not for Resale

*(a)* education and experience (minimum of high school diploma and 5 years' experience in the RTP corrosion resistance industry);

*(b)* demonstrated inspection ability to the Fabricator employing him or her;

*(c)* satisfactory expertise and experience according to the complexity of the assignment;

*(d)* knowledge of RTP-1;

*(e)* knowledge of Fabricator's Quality Assurance Program and shop procedure;

*(f)* knowledge and ability to evaluate and monitor procedures and performance;

*(g)* knowledge of keeping and maintaining records.

### 1-430 Inspector's Duty

It is the duty of the Inspector to make all the inspections necessary to verify that the requirements of this Standard and the Fabricator's Design Report have been met. The Inspector of the vessel does not have the duty of determining the completeness or correctness of the design calculations; however, he or she does have the duty of establishing that the Fabricator of the vessel has the UBRS and the Fabricator's Design Report on file, and that the requirements of para. 1-300 have been met.

### 1-440 Access for the Inspector

The Inspector shall be permitted free access, at all times while work on the vessel is being performed, to all parts of the Fabricator's shop that concern the fabrication of the vessel and to the site of field fabrication or erection during the period of field fabrication, erection, and testing. The Fabricator shall keep the Inspector informed of the progress of the work and shall notify him or her in advance when the vessel or materials will be ready for any required tests or inspection.

## 1-500 FABRICATOR'S QUALITY CONTROL PROGRAM

A written description of the Quality Control Program, that explains which documents and procedures the Fabricator will use to produce equipment to this Standard, shall be available for review. The Quality Control Program shall be in accordance with the requirements of Appendix M-4. See Appendix NM-6 for an example of a Fabricator's Quality Control Program.

### 1-510 Fabricator's Demonstration of Capability

See Part 7.

### 1-520 Accreditation

*(a)* In order for any vessel to be marked with the ASME RTP-1 Symbol, the Fabricator shall first be accredited by ASME and shall possess a valid Certificate of Authorization (refer to Part 8). The Fabricator has the responsibility of complying with all the requirements of this Standard and the UBRS. The Fabricator also has the responsibility to certify that any work done by others also complies with all the requirements of this Standard. This responsibility includes providing the Inspector with all required information and assuring that the detailed examinations and tests are performed at the stages of fabrication that permit them to be meaningful.

*(b)* The Certified Individual, subsequent to completion of all inspections by the Inspector (see Part 6), shall complete and sign the Fabricator's Data Report or Fabricator's Partial Data Report as applicable. See Tables 1-2 and 1-3. The original copy of such Data Reports shall be sent or delivered to the User (or User's Agent). Copies of such Data Reports shall be retained in the Fabricator's record system in accordance with Appendix M-4, para. M4-300(c). **(00)**

*(c)* The Inspector shall sign the Fabricator's Data Report (or Partial Data Report) only when he or she is satisfied that all requirements of this Standard have been met.

### 1-530 Requirements for Nameplate Construction and Attachment

*(a)* The method for identifying a vessel built to this Standard shall be a heavy paper or corrosion resistant metal nameplate not less than 4 in. × 6 in. in size. The nameplate shall be permanently attached to the vessel or to a corrosion resistant bracket permanently attached to the vessel as follows.

*(1)* Paper nameplates shall be laminated to the vessel surface or to an RTP bracket using resin-wetted layers of fiberglass surfacing veil.

*(2)* Metal nameplates shall be permanently attached to a metal or RTP bracket. Easily removable fasteners such as screws, bolts, and drive pins are not acceptable attachment methods.

*(3)* In the case of an insulated vessel, the bracket shall have a standoff height of at least 1 in. more than the insulation thickness.



Copyright ASME International
Provided by IHS under license with ASME
No reproduction or networking permitted without license from IHS
Not for Resale

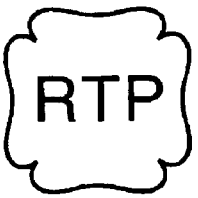


**FIG. 1-1 OFFICIAL ASME RTP-1 SYMBOL**

*(b)* The nameplate shall be marked with all information as required by para. 1-540.

*(c)* After attachment to the vessel or bracket, all data shall be visible and legible.

*(d)* Nameplates shall be located in such a position as to be easily visible after a vessel is installed. Users should designate required nameplate location prior to the time that drawings are approved for fabrication. Locations near manways, which after vessel installation would be near ground level or just above an operating platform, are recommended.

*(e)* In addition to the nameplate, Fabricators may affix or attach any such proprietary or User logos, or data plates, as desired, with no limitation on design, method of affixment, data content, or location, provided the structural integrity of the vessel or its usefulness is not compromised.

### 1-531 The Official ASME RTP-1 Symbol

*(a)* The official ASME RTP-1 Symbol to be applied to a vessel built according to all provisions of this Standard is shown in Fig. 1-1.

*(b)* The Fabricator who completes a vessel, and has held throughout its design and fabrication a valid Certificate of Authorization having the acceptance of the Inspector [see paras. 6-300(i) and 6-900(f)], may then apply the ASME RTP-1 Symbol, which together with the Fabricator's Data Report shall certify all requirements of this Standard have been met.

The ASME RTP-1 Symbol shall be applied after the successful completion of all tests required by paras. 6-910 through 6-960.

*(c)* RTP subassemblies or components of a vessel for which Partial Data Reports are required in Part 6 shall be marked by the component Fabricator with the following:

*(1)* the official ASME RTP-1 Symbol shown in Fig. 1-1 above the word "COMPONENT";

*(2)* name of the Fabricator of the part of the vessel, and certificate number, preceded by the words "Certified By."

### 1-540 Information and Marking Requirements on Nameplates

*(a)* Each nameplate shall be marked with the following:

*(1)* the official ASME RTP-1 Symbol shown in Fig. 1-1;

*(2)* name of the Fabricator of the vessel and certificate number;

*(3)* Fabricator's serial number for the vessel;

*(4)* year stamped;

*(5)* User's identification number (if specified in the UBRS);

*(6)* Manufacturer's Specific Product Identification for resin;

*(7)* appropriate Visual Inspection Level (Level 1 or Level 2);

*(8)* maximum allowable working pressure (psig at maximum temperature, °F);

*(9)* minimum allowable working pressure (psig at maximum temperature, °F);

*(10)* design basis specific gravity of contents;

*(11)* the designation "Critical Service" if applicable.

*(b)* Letters and figures indicating specific vessel design data must be at least $^{5}/_{16}$ in. high. Preprinted legend letters and figures must be at least $^{1}/_{8}$ in. high.

### 1-550 Design Requirements for Nameplates

*(a) Paper Nameplates*

*(1)* Paper must be at least 0.004 in. thick and of high quality, white bond or linen base.

*(2)* All markings must be black, highly visible and readable, on a white background.

*(3)* Markings, including the ASME RTP-1 Symbol, must be made in indelible ink of such nature as not to be water or resin soluble.

*(b) Metal Nameplates*

*(1)* Material shall be 304 stainless steel or as specified in the UBRS.

*(2)* Thickness shall be sufficient to resist distortion due to the application of the marking, but in no case shall be less than 0.020 in.

*(3)* Markings may be produced by casting, etching, embossing, stamping, or engraving. The ASME RTP-1 Symbol shall be stamped.

*(4)* Finish shall be brushed smooth or hazed (never highly polished) to improve bond when laminated to the bracket.

*(5)* Nameplates shall be thoroughly degreased with a solvent and dried prior to laminating to the bracket.



Copyright ASME International
Provided by IHS under license with ASME
No reproduction or networking permitted without license from IHS

Not for Resale

## TABLE 1-1 USER'S BASIC REQUIREMENTS SPECIFICATION (UBRS) (00)
## As Required by the Provisions of ASME RTP-1

Page 1 of 4

RTP Edition No._____

UBRS Revision No._____

User firm name _____

User's Agent firm name _____

Title of equipment _____

User's designation no._____

Installation location (name and address) _____

UBRS prepared by (User or User's Agent):

Name _____ Phone no. _____ Date _____

Address _____

1. Equipment description (equipment sketch and nozzle schedule must be attached):

2. Additional Fabricator responsibilities:
   - [ ] Special requirements
     - [ ] Acoustic emission testing
     - [ ] Inspection or testing requirements not listed in the Standard _____
     - [ ] _____
     - [ ] _____
   - [ ] Visual inspection acceptance level (refer to Table 6-1 of ASME RTP-1):
     - [ ] Level 1
     - [ ] Level 2

     Quantity limitations for gaseous air bubbles or blisters _____



Copyright ASME International
Provided by IHS under license with ASME
No reproduction or networking permitted without license from IHS Not for Resale

(00)

## TABLE 1-1 USER'S BASIC REQUIREMENTS SPECIFICATION (UBRS) (CONT'D)
## As Required by the Provisions of ASME RTP-1



RTP Edition No._____

UBRS Revision No._____

[ ] Additional inspection aids/methods [refer to para. 6-940(c) of ASME RTP-1] _____

3. Material selection

3.1 Material selection by:

[ ] Resin manufacturer (include data per section 4 of this document)

[ ] Fabricator (include data per section 4 of this document)

[ ] End User. Applicable User's specifications/standards, codes, ordinances, FDA requirements, etc. (list and specify; attach copies of local code/ordinance requirements) _____

[ ] Other _____

3.2 Material of construction:

Resin _____ Catalyst/cure system _____

Veil _____ Barcol hardness per para. 6-910(b)(4) _____

[ ] Lift lugs: [ ] RTP [ ] Carbon steel [ ] Other _____

[ ] Hold down lugs: [ ] RTP [ ] Carbon steel [ ] Other _____

4. Chemical service data (must be provided when Fabricator or resin manufacturer is making material selection) _____

4.1 Description of process function and process sequence: _____

4.2 Contents:

| Chemical Name | Concentration Max. % | Concentration Min. % | Exposure Time |
|---|---|---|---|
| | | | |
| | | | |
| | | | |
| | | | |

4.3 pH range: _____ max. _____ min.

5. Design

5.1 Design conditions:

| | Operating | Design |
|---|---|---|
| Internal pressure | | |
| External pressure | | |
| Temperature | | |
| Specific gravity | | |
| Liquid level | | |



Copyright ASME International
Provided by IHS under license with ASME
No reproduction or networking permitted without license from IHS
Not for Resale

## TABLE 1-1 USER'S BASIC REQUIREMENTS SPECIFICATION (UBRS) (CONT'D) (00)
## As Required by the Provisions of ASME RTP-1 (b)



RTP Edition No._____

UBRS Revision No._____

Wind load _____ mph Elevation above grade _____ Exposure _____

Wind code/year _____ [ ] ASCE 7-_____ [ ] UBC _____ [ ] Other _____

Snow load _____ psf Seismic zone _____ Site-specific seismic information _____

Seismic code/year _____ [ ] ASCE 7-_____ [ ] UBC _____ [ ] Other _____

Capacities: Operating _____ gal

Flooded _____ gal

5.2 Agitation:

Dead load _____ lb

Bending moment _____ ft-lb

Torque _____ ft-lb

Horsepower_____ hp

Impeller speed_____ RPM

Impeller diameter _____ in.

Number of impellers _____

Foot bearing: [ ] Yes [ ] No

5.3 Heating and cooling:

[ ] Electric panels

[ ] Steam coil

[ ] Steam sparger

[ ] Heat exchanger

[ ] Other _____

5.4 Mechanical and other forces:

[ ] Violent chemical reaction

[ ] Subsurface introduction of gas or vapor

[ ] Subsurface introduction of steam

[ ] Transmitted mechanical load/force

[ ] Impact due to introduction of solids

[ ] Vacuum from pump down (or vessel draining)

[ ] Vacuum from cool down

[ ] Other _____

5.5 Corrosion barrier excluded from structural calculations:

[ ] Yes

[ ] No

5.6 Declaration of *critical service* (only by User or User's Agent; refer to para. 1-210 of ASME RTP-1):

[ ] Yes

[ ] No

6. Designation of Inspector (Review paras. 1-400, 1-430, and 1-440 of ASME RTP-1. It must be recognized that ASME RTP-1 establishes numerous duties for the Inspector, which necessitates that the Inspector be present in the fabrication shop throughout a major portion of the fabrication interval.). Inspector shall be:

[ ] Fabricator's Quality Control principal

[ ] User's representative

[ ] Other



Copyright ASME International
Provided by IHS under license with ASME
No reproduction or networking permitted without license from IHS
Not for Resale

(00) **TABLE 1-1 USER'S BASIC REQUIREMENTS SPECIFICATION (UBRS) (CONT'D)**
**As Required by the Provisions of ASME RTP-1**



RTP Edition No._____

UBRS Revision No._____

Inspector's name _____ Telephone _____

Company _____

Address _____

_____

6.1 Approval of Inspector designation

6.1.1 Authorized User's representative:

Name _____ Title _____

Signature _____ Date _____

6.1.2 Authorized Fabricator's representative:

Name _____ Title _____

Signature _____ Date _____

Additional requirements: _____

GENERAL NOTE: This form may be reproduced and used without written permission from ASME if used for purposes other than republication.



Copyright ASME International
Provided by IHS under license with ASME
No reproduction or networking permitted without license from IHS

Not for Resale

## TABLE 1-2 FABRICATOR'S DATA REPORT (00)

**FABRICATOR'S CERTIFICATE OF COMPLIANCE**

We certify the information in this Data Report to be correct and that the vessel has been designed and fabricated in accordance with all requirements of ASME RTP-1 and the User's Basic Requirements Specification.

ASME RTP-1–_____ Addenda _____ No. _____ (Certificate of Authorization) _____ (expires)

Date _____ (month / day / year)

_____ (Fabricator's name)

_____ (signature of Certified Individual)

_____ (print or type name)

_____

_____

_____ (address of fabrication site)

**INSPECTOR'S CERTIFICATION**

I, the undersigned, employed by _____ (print company name) of _____ (city and state),

have inspected the vessel described in this Fabricator's Data Report and believe that the Fabricator has constructed it in accordance with the requirements of ASME RTP-1. By signing this certificate, neither the Inspector nor his or her employer (if other than the Fabricator) makes any warranty, expressed or implied, concerning performance of the vessel.

Date _____ (month / day / year)

_____ (Inspector's signature)

_____ (print or type name)

GENERAL NOTES:

(a) The following documents, all updated to as-built status, are required attachments to this Data Report:
  (1) User's Basic Requirements Specification;
  (2) Design Report signed and stamped by the Professional Engineer;
  (3) drawings;
  (4) copies of all quality control forms used in the Fabricator's Quality Control Program during the course of fabrication.

(b) This form may be reproduced and used without written permission from ASME if used for purposes other than republication.



Copyright ASME International
Provided by IHS under license with ASME
No reproduction or networking permitted without license from IHS Not for Resale

(00)

## TABLE 1-3 FABRICATOR'S PARTIAL DATA REPORT

**FABRICATOR'S[1] PARTIAL DATA REPORT**

We certify the information in this Partial Data Report to be correct and that the part(s) is designed and fabricated in accordance with all requirements of ASME RTP-1.

ASME RTP-1–_____ Addenda _____

Date _____ _____ _____
(month / day / year) (Fabricator's name) (signature of Certified Individual)

_____ _____
(print or type name)

_____

_____

_____
(address of fabrication site)

**INSPECTOR'S CERTIFICATION**

I, the undersigned, employed by _____ of _____, have inspected the part(s) described in this Fabricator's Partial Data Report and believe that the Fabricator has constructed such in accordance with the requirements of ASME RTP-1. By signing this certificate, neither the Inspector nor his or her employer (if other than the Fabricator) makes any warranty, expressed or implied, concerning performance of the part(s).

Date _____ _____
(month/day/year) (Inspector's signature)

_____
(print or type name)

GENERAL NOTES:
(a) The following documents, all updated to as-built status, are required attachments to this Data Report:
(1) applicable design data signed and stamped by the Professional Engineer;
(2) drawings;
(3) copies of all quality control forms used in the Fabricator's Quality Control Program during the course of fabrication.
(b) This form may be reproduced and used without written permission from ASME if used for purposes other than republication.

NOTE:
(1) The Fabricator referred to in this Partial Data Report is that Fabricator who constructed the part or portion of the vessel covered by this Partial Data Report.



Copyright ASME International
Provided by IHS under license with ASME
No reproduction or networking permitted without license from IHS
Not for Resale

# PART 2
# MATERIALS

## (b) 2-100 SCOPE

Part 2 defines the materials comprising the glass fiber reinforced thermoset polyester and vinyl ester resin laminates, and the types of laminates used to fabricate the RTP corrosion resistant equipment. See Appendix M-12 for thermoplastic lining materials used in dual laminate vessels.

## 2-200 LAMINATE COMPOSITIONS

The composition of the allowable RTP laminates is limited to the specific materials in Part 2 and Appendices M-1 and M-2. Subpart 2A covers predefined standard laminates as representative flat laminates. Subpart 2B covers laminates developed using the Lamination Analysis Method, by which the modulus properties of laminates are obtained. Subpart 2C covers permissible tolerances for laminate thickness variation.

Construction and testing for properties of design basis laminates is required in Subpart 2A. Calculation of laminate properties by the Lamination Analysis Method (Appendix M-3) is required in Subpart 2B.

Minimum inspections and tests to be performed on reinforcements, prior to their use, are described in Appendix M-1.

Minimum inspections and tests to be performed on resins, curing agents, and common additives, prior to their use, are described in Appendix M-2.

### 2-210 Resin and Reinforcement Substitution

The Fabricator shall use the same resins and reinforcements during fabrication as used in the design basis laminates and Lamination Analysis Method, with the exception of the surfacing veil (mat), which may be changed as required for corrosion resistance.

## 2-300 MATERIALS

### 2-310 Resin Matrix

The resin shall be that polyester or vinyl ester specified by the User's Basic Requirements Specification. Only resins with an HDT of at least 180°F per ASTM D 648 with a 264 psi loading and a $\frac{1}{8}$ in. specimen, as published by the resin manufacturer, shall be used. When a maximum flame retardancy is specified by the UBRS, the flame spread rating shall be determined by the resin manufacturer according to ASTM E 84 using all mat laminates greater than 0.1 in. thick. Verification of the flame spread rating is *not* required as a part of laminate qualification. Since flame spread can be determined only on flat laminate panels, verification is *not* required on fabricated equipment. Prior to use in laminate fabrications, the resin shall be inspected, tested, and found acceptable by the inspections and tests specified in Appendix M-2.

*(a)* The catalyst/promoter/accelerator system shall be as recommended by the resin manufacturer and specified in the Fabricator's written procedures.

*(b)* The resin shall contain no pigment, dyes, colorants, or filler, except as follows.

*(1)* A thixotropic agent that does not interfere with visual inspection of laminate quality, or with the required corrosion resistance of the laminate, may be added for viscosity control.

NOTE: The addition of a thixotropic agent may reduce the resistance of a laminate to some corrosive chemical environments. It is the responsibility of the Fabricator to obtain approval from the selector of the resin prior to using a thixotropic agent in the inner surface (para. 2A-221) or the interior layer (para. 2A-222).

*(2)* Resin pastes used to fill crevices before overlay shall not be subject to these limitations. (b)

*(3)* Pigments, dyes, or colorants may be added to the exterior surface when specified by the UBRS.

NOTE: The addition of pigment, dyes, or colorants may interfere with visual inspection of laminate quality.

*(4)* Flame retardant synergists shall be used *only* when required in the UBRS. If fire retardant synergists were used to obtain the specified ASTM E 84 flame spread rating, the same type and amount must be used in the laminate.

NOTE: The addition of fire retardant synergists may interfere with visual inspection of laminate quality.

*(5)* Common additives, as described in Appendix



Copyright ASME International
Provided by IHS under license with ASME
No reproduction or networking permitted without license from IHS
Not for Resale

M-2, Article G, may be added without requalifying the standard laminate.

### 2-320 Fiber Reinforcement

Fiber reinforcements shall be in compliance with the references listed below for each material type:

*(a)* fiberglass surfacing veil (mat), organic fiber surfacing veil (mat), carbon fiber surfacing veil (mat), and fiberglass chopped strand mat — Appendix M-1, Article A;

*(b)* fiberglass spray-up roving and filament winding roving — Appendix M-1, Article B;

*(c)* fiberglass woven roving fabric, fiberglass unidirectional fabric, and fiberglass nonwoven multifabric — Appendix M-1, Article C;

*(d)* fiberglass milled fiber — Appendix M-1, Article D.

**(b)** 

### 2-330 Balsa Wood Core

Balsa wood core materials shall be in compliance with Appendix M-13.

## SUBPART 2A
## REQUIREMENTS FOR
## REPRESENTATIVE FLAT LAMINATES

### 2A-100 INTRODUCTION

A representative flat laminate is one made with the laminate sequence used in the design. Design basis laminates per para. 2A-300 are required.

### 2A-200 LAMINATE REQUIREMENTS

### 2A-210 Laminate Construction

Laminate construction shall be in accordance with the tabulated lay-up sequence for the specified type.

*(a)* Type I laminate structure is detailed in Table 2A-1.

*(b)* Type II laminate structure is detailed in Table 2A-2.

### 2A-220 Laminate Composition

Laminates shall consist of a corrosion resistant barrier (comprised of an inner surface and interior layer) and a structural layer. The reinforcement content of the corrosion barrier shall be 20–30% by weight.

**2A-221 Inner Surface Corrosion Resistant Barrier.** The inner surface exposed to the contents shall be a resin-rich layer reinforced with a surfacing veil providing a thickness of 0.01 in. to 0.02 in.

**2A-222 Interior Layer Corrosion Resistant Barrier.** The inner surface layer, exposed to the contents, shall be followed with an interior layer. This layer is composed of resin reinforced with noncontinuous glass fiber strands (1.0 in. to 2.0 in. long), applied in a minimum of two plies totaling a minimum of 3 oz/sq ft. These plies shall be layers of chopped strand mat and/or chopped roving. Each ply of mat or pass of chopped roving shall be well rolled to thoroughly wet out reinforcement and remove entrapped air prior to the application of additional reinforcement. The combined thickness of the inner surface and interior layer shall not be less than 0.10 in.

### 2A-223 Structural Layer

*(a)* Application of the structural layer shall not alter the corrosion resistant barrier.

*(b)* The first ply of the structural layer of the laminate shall be one or more plies of noncontinuous glass fibers totaling $1\frac{1}{2}$ oz/sq ft, comprised of chopped strand mat and/or chopped roving.

*(c)* Continue lay-up in the sequence of plies stated for the specified laminate type.

*(d)* All edges of reinforcement material shall be lapped a minimum of 1 in. Lapped edges of adjacent layers shall be staggered.

*(e)* Interruption of the fabrication process to allow for an exotherm shall follow instructions noted on the appropriate table for the particular laminate type. The final ply of reinforcement before interruption for gel and exotherm shall be $\frac{3}{4}$ oz/sq ft minimum. The first ply of the ensuing lamination shall also be $\frac{3}{4}$ oz/sq ft minimum. Both the final and first plies shall be comprised of layers of chopped strand mat and/or layers of chopped roving. **(00)** **(b)**

### 2A-224 Outer Surface

*(a)* The outer surface of the finished laminate shall be a separately applied paraffinated resin coat that, when cured, passes the acetone test per ASTM C 582, para. 9.2.2. This outer surface coat shall either be applied over the final mat ply of the structural layer or over an additional resin-rich layer when required by (b) below.



Copyright ASME International
Provided by IHS under license with ASME
No reproduction or networking permitted without license from IHS

Not for Resale

*(b)* When the UBRS indicates the outer surface will be subjected to spillage or a corrosive environment, a resin-rich layer, in accordance with para. 2A-221, shall be applied over the final mat ply of the structural layer prior to the application of the paraffinated resin coat in (a) above.

*(c)* The UBRS may include provisions to minimize ultraviolet degradation of the laminate. Methods include



Copyright ASME International
Provided by IHS under license with ASME
No reproduction or networking permitted without license from IHS

Not for Resale

## TABLE 2A-1 STANDARD LAMINATE COMPOSITION TYPE I

| Nominal Thickness, in. [Notes (1), (2)] | Sequence of Plies | | | | | | | | | | | | | | | | | Drafting Symbols |
|---|---|---|---|---|---|---|---|---|---|---|---|---|---|---|---|---|---|---|
| | 1 | 2 | 3 | 4 | 5 | 6 | 7 | 8 | 9 | 10 | 11 | 12 | 13 | 14 | 15 | 16 | 17 | 18 | |
| 0.18 | *V* | *M* | *M* | *M* | *M* | ... | ... | ... | ... | ... | ... | ... | ... | ... | ... | ... | ... | ... | *V,4M* |
| 0.23 | *V* | *M* | *M* | *M* | *M* | *M* | ... | ... | ... | ... | ... | ... | ... | ... | ... | ... | ... | ... | *V,5M* |
| 0.27 | *V* | *M* | *M* | *M* | *M* | *M* | *M* | ... | ... | ... | ... | ... | ... | ... | ... | ... | ... | ... | *V,6M* |
| 0.31 | *V* | *M* | *M* | *M* | *M* | *M* | *M* | *M* | ... | ... | ... | ... | ... | ... | ... | ... | ... | ... | *V,7M* |
| 0.35 | *V* | *M* | *M* | *M* | *M* | *M* | *M* | *M* | *M* | ... | ... | ... | ... | ... | ... | ... | ... | ... | *V,8M* |
| 0.40 | *V* | *M* | *M* | *M* | *M* | *M* | *M* | *M* | *M* | *M* | ... | ... | ... | ... | ... | ... | ... | ... | *V,9M* |
| 0.44 | *V* | *M* | *M* | *M* | *M* | *M* | *M* | *M* | *M* | *M* | *M* | ... | ... | ... | ... | ... | ... | ... | *V,10M* |
| 0.48 | *V* | *M* | *M* | *M* | *M* | *M* | *M* | *M* | *M* | *M* | *M* | *M* | ... | ... | ... | ... | ... | ... | *V,11M* |
| 0.53 | *V* | *M* | *M* | *M* | *M* | *M* | *M* | *M* | *M* | *M* | *M* | *M* | *M* | ... | ... | ... | ... | ... | *V,12M* |
| 0.57 | *V* | *M* | *M* | *M* | *M* | *M* | *M* | *M* | *M* | *M* | *M* | *M* | *M* | *M* | ... | ... | ... | ... | *V,13M* |
| 0.61 | *V* | *M* | *M* | *M* | *M* | *M* | *M* | *M* | *M* | *M* | *M* | *M* | *M* | *M* | *M* | ... | ... | ... | *V,14M* |
| 0.66 | *V* | *M* | *M* | *M* | *M* | *M* | *M* | *M* | *M* | *M* | *M* | *M* | *M* | *M* | *M* | *M* | ... | ... | *V,15M* |
| 0.70 | *V* | *M* | *M* | *M* | *M* | *M* | *M* | *M* | *M* | *M* | *M* | *M* | *M* | *M* | *M* | *M* | *M* | ... | *V,16M* |
| 0.74 | *V* | *M* | *M* | *M* | *M* | *M* | *M* | *M* | *M* | *M* | *M* | *M* | *M* | *M* | *M* | *M* | *M* | *M* | *V,17M* |

GENERAL NOTES:
(a) Thicknesses above 0.74 in. nominal can be used by adding additional plies of mat.
(b) Actual thickness and glass content of each sequence of plies shall be established by each Fabricator based on his or her design basis laminate.
(c) Corrosion barrier (plies 1, 2, and 3) shall gel and exotherm before structural plies are added.
(d) Structural lay-up may be interrupted at intervals long enough to exotherm in accordance with Fabricator's procedure.
(e) A weight equivalent layer or layers of chopped strand glass or mat may be used in place of layers of 1.5 oz mat.

NOTES:
(1) Nominal thickness is calculated as follows:
*V* = 10 mil surface mat (veil) – 0.010 in./ply
*M* = 1½ oz/sq ft mat – 0.043 in./ply
(2) This information is based on historical data and may not reflect all laminates made today. Laminates made today are often thinner and have a higher glass content than noted in the Table. The Table should be used for establishing minimum glass plies per nominal laminate thickness. Ply thicknesses should be based on design basis laminates.

use of ultraviolet absorbers, screening agents, or resins resistant to ultraviolet degradation, or incorporation of pigment of sufficient opacity in the paraffinated resin coat. Since pigmentation makes laminate inspection difficult, the resin-rich layer shall be applied only after the laminate has been inspected by the Inspector.

*(d)* Where the final lay-up is exposed to air, full surface cure shall be obtained by applying to the final lay-up a coat of paraffinated resin that, when cured, passes the acetone test. Other techniques such as sprayed, wrapped, or overlaid films are also acceptable methods to attain surface cure, provided the surface resin under the film passes the acetone test.

## 2A-300 REQUIREMENTS FOR PHYSICAL AND MECHANICAL PROPERTIES

*(a)* The Fabricator shall prepare design basis laminates for each combination of resin and glass to determine thickness and glass content. Straight line interpolation shall be used to determine values not tested directly. In addition, the Fabricator shall choose one of the following two options to establish his or her design tensile strength and design tensile modulus.

*(1)* The Fabricator shall specify the minimum values in Table 2A-3. This method shall not be used where laminates are fabricated for use above 180°F.

*(2)* The Fabricator shall obtain the tensile strength, tensile modulus, flexural strength, and flexural modulus of the design basis laminates in accordance with para. 2A-400. Results shall be certified by the individual who conducted or supervised the testing.

When the corrosion barrier is included in the design as a contributor to the structural strength of the laminate, the following design basis laminates shall include the inner surface, interior layer, and structural layer, but not the outer surface:

Type I, 0.18 in. nominal thickness



Copyright ASME International
Provided by IHS under license with ASME
No reproduction or networking permitted without license from IHS Not for Resale

Copyright ASME International
Provided by IHS under license with ASME
No reproduction or networking permitted without license from IHS





(00)

## TABLE 2A-2 STANDARD LAMINATE COMPOSITION TYPE II

| Nominal Thickness, in. [Notes (1), (2)] | Sequence of Plies | | | | | | | | | | | | | | | | | | | | |
|---|---|---|---|---|---|---|---|---|---|---|---|---|---|---|---|---|---|---|---|---|---|
| | 1 | 2 | 3 | 4 | 5 | 6 | 7 | 8 | 9 | 10 | 11 | 12 | 13 | 14 | 15 | 16 | 17 | 18 | 19 | 20 | Drafting Symbols |
| 0.22 | *V* | *M* | *M* | *M* | *R* | *M* | ... | ... | ... | ... | ... | ... | ... | ... | ... | ... | ... | ... | ... | ... | *V,2M,MRM* |
| 0.29 | *V* | *M* | *M* | *M* | *R* | *M* | *R* | *M* | ... | ... | ... | ... | ... | ... | ... | ... | ... | ... | ... | ... | *V,2M,2(MR)M* |
| 0.37 | *V* | *M* | *M* | *M* | *R* | *M* | *R* | *M* | *R* | *M* | ... | ... | ... | ... | ... | ... | ... | ... | ... | ... | *V,2M,3(MR)M* |
| 0.41 | *V* | *M* | *M* | *M* | *R* | *M* | *R* | *M* | *R* | *M* | *M* | ... | ... | ... | ... | ... | ... | ... | ... | ... | *V,2M,3(MR)M,M* |
| 0.49 | *V* | *M* | *M* | *M* | *R* | *M* | *R* | *M* | *R* | *M* | *M* | *R* | *M* | ... | ... | ... | ... | ... | ... | ... | *V,2M,3(MR)M,MRM* |
| 0.56 | *V* | *M* | *M* | *M* | *R* | *M* | *R* | *M* | *R* | *M* | *M* | *R* | *M* | *R* | *M* | ... | ... | ... | ... | ... | *V,2M,3(MR)M,2(MR)M* |
| 0.64 | *V* | *M* | *M* | *M* | *R* | *M* | *R* | *M* | *R* | *M* | *M* | *R* | *M* | *R* | *M* | *R* | *M* | ... | ... | ... | *V,2M,3(MR)M,3(MR)M* |
| 0.68 | *V* | *M* | *M* | *M* | *R* | *M* | *R* | *M* | *R* | *M* | *M* | *R* | *M* | *R* | *M* | *R* | *M* | *M* | ... | ... | *V,2M,3(MR)M,3(MR)M,M* |
| 0.76 | *V* | *M* | *M* | *M* | *R* | *M* | *R* | *M* | *R* | *M* | *M* | *R* | *M* | *R* | *M* | *R* | *M* | *M* | *R* | *M* | *V,2M,3(MR)M,3(MR)M,MRM* |

GENERAL NOTES:
(a) Thicknesses above 0.76 in. nominal can be used following pattern established for 0.76 in. thick laminate.
(b) Actual thickness and glass content of each sequence of plies shall be established by each Fabricator based on his or her design basis laminate.
(c) Corrosion barrier (plies 1, 2, and 3) shall gel and exotherm before structural plies are added.
(d) Structural lay-up may be interrupted long enough to exotherm between adjacent *"MM"* plies. If required by fabrication procedure, location of exotherm plies may be changed by shifting plies 10 and 17 within the laminate body or by splitting an *"M"* ply into weight-equivalent layer(s).
(e) A weight equivalent layer or layers of chopped strand glass or mat may be used in place of layers of 1.5 oz mat.

NOTES:
(1) Nominal thickness is calculated as follows:
*V* = 10 mil surface mat (veil) – 0.010 in./ply
*M* = $1\frac{1}{2}$ oz/sq ft mat – 0.043 in./ply
*R* = 24 oz/sq yd woven roving – 0.033 in./ply
(2) This information is based on historical data and may not reflect all laminates made today. Laminates made today are often thinner and have a higher glass content than noted in the Table. The Table should be used for establishing minimum glass plies per nominal laminate thickness. Ply thicknesses should be based on design basis laminates.



Not for Resale

**TABLE 2A-3 MINIMUM VALUES OF FLAT LAMINATES** (b)

| Nominal Thickness, in. | Type | Ultimate Tensile Strength, psi [Note (1)] | Tensile Modulus, psi [Note (1)] | Ultimate Flexural Strength, psi [Note (2)] | Flexural Modulus, psi [Note (2)] |
|---|---|---|---|---|---|
| All | I | $9.0 \times 10^3$ | $1.00 \times 10^6$ | $16.0 \times 10^3$ | $0.70 \times 10^6$ |
| 0.22 | II | $12.0 \times 10^3$ | $1.30 \times 10^6$ | $19.0 \times 10^3$ | $0.80 \times 10^6$ |
| 0.29 | II | $13.5 \times 10^3$ | $1.40 \times 10^6$ | $20.0 \times 10^3$ | $0.90 \times 10^6$ |
| 0.37 and above | II | $15.0 \times 10^3$ | $1.50 \times 10^6$ | $22.0 \times 10^3$ | $1.00 \times 10^6$ |

GENERAL NOTE: The tabulated values remain unchanged up to 180°F. Above that temperature, measured properties may decrease.

NOTES:
(1) ASTM D 638 at 73°F or ASTM D 5083 at 73°F.
(2) ASTM D 790 at 73°F.

Type I, 0.48 in. nominal thickness
Type I, 0.74 in. nominal thickness
Type II, 0.22 in. nominal thickness
Type II, 0.49 in. nominal thickness
Type II, 0.76 in. nominal thickness

When the corrosion barrier is excluded from the design as a contributor to the structural strength of the laminate per para. 6-930(d)(5)(d), the following design basis laminates shall include only the structural layer:

Type I, 0.35 in. nominal thickness
Type II, 0.37 in. nominal thickness

Properties of each type shall be established on flat laminates prepared under shop conditions. For Type II laminates, the woven roving is laid-up in square array with warp rovings parallel layer to layer, and test specimens are cut parallel to the warp rovings.

*(b)* For design purposes, properties at 73°F are acceptable up to 180°F. Where laminates are fabricated for use at design temperatures above 180°F, certification of strength and modulus per paras. 2A-400(a) and (b) shall be supplied at or above the specified temperature.

(b) *(c)* The thickness and glass content of laminates shall be based on the data obtained from the Fabricator's design basis laminates. For laminate Types I and II, thickness and glass content shall be determined from laminates described in para. 2A-300(a)(2). Six thickness and glass content per unit area readings shall be taken on each design basis laminate. They shall be taken at 1 in. to 2 in. from each corner, except for two readings taken from the middle of the laminate. The highest thickness and glass content per unit area reading taken (of the six) must be no more than 115% of the lowest reading taken. The six readings shall be averaged to give the design basis laminate thickness and glass content for each laminate tested. The average thickness value shall be from 85% to 115% of the nominal thickness listed in Tables 2A-1 and 2A-2.

NOTE: *Glass content per unit area* means weight per unit area and is not a weight percent value.

*(d)* The laminate compositions and minimum properties for Type I production laminates are given in Tables 2A-1 and 2A-3.

*(e)* The laminate compositions and minimum properties for Type II production laminates are given in Tables 2A-2 and 2A-3.

NOTE: The laminate properties found in Table 2A-3 are conservative and historically proven. They represent a compilation of data on the most available laminating materials.

## 2A-400 TEST METHODS

*(a)* Tensile strength and tensile modulus of elasticity shall be determined by ASTM D 638 or ASTM D 5083. The tensile modulus shall be determined using the data between 400 and 1,300 microstrain unless another strain range better represents the flat portion of the curve. Any strain range other than 400 and 1,300 microstrain shall be reported with the modulus value. Specimens shall be in accordance with Type III, Fig. 1 of ASTM D 638, or in accordance with para. 6.1.1 of ASTM D 5083, except that actual laminate thickness shall be used.

*(b)* Flexural strength and flexural modulus of elasticity shall be determined by ASTM D 790. The molded surface (corrosion barrier) shall be tested in compression.

*(c)* Glass content, weight percent, shall be determined in accordance with ASTM D 2584.

*(d)* When required, the residual undisturbed glass fiber plies from ASTM D 2584 shall be separated carefully and counted and/or weighed to confirm standard lay-up sequence.



Copyright ASME International
Provided by IHS under license with ASME
No reproduction or networking permitted without license from IHS
Not for Resale

*(e)* Thickness shall be measured with a ball foot micrometer or caliper. When the configuration of the part will not allow the use of these instruments, a digital magnetic intensity instrument (ASTM D 4166) or an ultrasonic thickness gauge found to be accurate when measuring vessel cutouts shall be used.

*(f)* When required, thermal conductivity shall be measured in accordance with ASTM C 177.

*(g)* When required, thermal expansion shall be measured in accordance with ASTM D 696.

*(h)* For isotropic laminates, mechanical property testing in only one direction is required. For anisotropic laminates, testing in both the principal $x$ and $y$ directions is required.

### 2A-500 RECORDS

The results of all required tests shall be recorded and shall be available for review by the Inspector.

### 2A-600 ADDITIONAL STANDARD LAMINATE COMPOSITIONS FOR SUBPART 2A

Other standard laminates may be used only after they have been listed as acceptable in Subpart 2A. In order for the new laminate to receive proper consideration, information and data are required to properly categorize the laminate. In general, this information and data include, but are not necessarily limited to, the following.

*(a)* All materials of the laminate must be identified and suggested specifications provided for any material not covered in Appendices M-1 and M-2.

*(b)* The laminate information needed includes tensile strength, tensile modulus, glass content, and thickness. The information must be supplied in the form of Table 2A-1 and/or Table 2A-2, plus data for minimum properties of standard laminates, Table 2A-3. The data must be generated from laminates made under typical shop conditions and tested per para. 2A-400. The information must include the heat distortion temperature of the resin used, which is required to be 180°F or greater.

NOTE: The requester should consider supplying data on laminates made using two or more widely different specific gravity resins by three or more fabricators, together with the appropriate Type I and/or Type II control laminate data.

Where the laminate is intended for special applications, requires special handling, or has known limitations or susceptibility to failure in certain services, precautionary requirements and information should be included in the submittal. The data should be submitted on laminates intended for use in place of the design basis laminates of Type I and/or Type II, as outlined in para. 2A-300(a)(2). Examples of representative field experiences should be submitted.

NOTE: When the new laminate is a minor modification of an existing standard laminate, the data required may be reduced with the concurrence of the Committee. When the data supplied are insufficient for an adequate evaluation, the Committee will request additional data.

## SUBPART 2B
## REQUIREMENTS FOR LAMINATES DEVELOPED USING THE LAMINATION ANALYSIS METHOD

### 2B-100 LAMINATE COMPOSITION

Laminates shall consist of a corrosion resistant barrier (comprised of an inner surface and interior layer) and a structural layer.

### 2B-110 Inner Surface Corrosion Resistant Barrier

See para. 2A-221.

### 2B-120 Interior Layer Corrosion Resistant Barrier

See para. 2A-222.

### 2B-130 Structural Layer

*(a)* Application of the structural layer shall not alter the corrosion resistant barrier.

*(b)* The first layer of the structural portion of the laminate shall be one or more plies of chopped strand mat totaling $1\frac{1}{2}$ oz/sq ft or equivalent chopped roving saturated with resin.

*(c)* The balance of the structural layer shall then be applied in strict duplication of the laminate sequence as designed per Appendix M-3.

### 2B-140 Outer Surface

See para. 2A-224.



Copyright ASME International
Provided by IHS under license with ASME
No reproduction or networking permitted without license from IHS
Not for Resale

## 2B-200 REQUIREMENTS FOR PHYSICAL AND MECHANICAL PROPERTIES

*(a)* The resin matrix tensile modulus and specific gravity are measured on a fully cured 0.125 in. thick neat resin casting. Tensile modulus properties at or above the design temperature shall be used. Specific gravity values at 75°F may be used for all design temperatures.

*(b)* Standardized tensile modulus and specific gravity for E glass shall be used for the Lamination Analysis Method (Appendix M-3).

*(c)* Laminate properties shall be calculated using the Lamination Analysis Method contained in Appendix M-3.

*(d)* The Fabricator shall prepare design basis laminates per para. 2A-300 for mechanical property testing.

*(e)* For cylindrical laminates, the following mechanical property tests are required: flexural strength and modulus in the hoop and axial directions (corrosion barrier in compression) and tensile strength and modulus in the axial direction.

## 2B-300 TEST METHODS

*(a)* Glass content, weight percent, shall be determined in accordance with ASTM D 2584.

*(b)* Matrix tensile modulus shall be determined in accordance with ASTM D 638.

*(c)* Matrix specific gravity shall be determined in accordance with ASTM D 792.

*(d)* Thickness of individual plies shall be determined with a microscope or other instrument having an accuracy of 0.001 in.

## 2B-400 RECORDS

For each laminate in para. 2B-130, record wind angles, number of wind cycles, and supplemental reinforcement. The objective is to uniquely define each laminate. Also, for each laminate, record results of testing done in paras. 2B-300(a) and (b), and make them available for review by the Inspector.

# SUBPART 2C (00)
# PERMISSIBLE TOLERANCES FOR LAMINATE THICKNESS VARIATION

There are two types of laminate thickness tests. The first, *average spot thickness,* is used to measure a small area or a small component [see para. 6-920(f)(2)]. The second, *average thickness of a major part,* is used to measure a large area, such as a shell or head, where several average spot thicknesses can be taken [see para. 6-920(f)(2)].

## 2C-100 TOLERANCE FOR AVERAGE SPOT THICKNESS

The thinnest value (of six) shall be equal to or greater than 90% of the design thickness of the laminate. The thickest value (of six) must be no more than 120% of the thinnest value. The average of six thickness values must be no less than 95% nor more than 125% of the design thickness of the laminate. See para. 2C-300 for exceptions.

## 2C-200 TOLERANCE FOR AVERAGE THICKNESS OF A MAJOR PART

The *average thickness of a major part* is the average of four average spot thickness values. The average thickness of a major part shall be not less than 95% nor more than 120% of the design thickness of the laminate. See para. 2C-300 for exceptions.

## 2C-300 EXCEPTIONS

Fabricators may add additional material to achieve the minimum thickness specified. All such additions shall be in accordance with the full repeating sequence of structural layers. The repeating construction of reinforced laminate may result in an over-thickness, which is permissible.



Copyright ASME International
Provided by IHS under license with ASME
No reproduction or networking permitted without license from IHS
Not for Resale

# PART 3
# DESIGN

## 3-100 SCOPE

Part 3 sets forth design formulas and rules for the use of contact molded and filament wound RTP materials for the fabrication of corrosion resistant vessels. It is limited to vessels that operate up to and including 15 psig internal pressure as measured at the top of the vessel. The limit on external pressure is 15 psig. The hydrostatic head resulting from the weight of internal contents, or external loading, shall be additive.

*(a)* Part 3 contains two separate subparts:

*(1)* Subpart 3A, Design by Rules

*(2)* Subpart 3B, Design by Stress Analysis

*(b)* Subpart 3A or 3B methods may be used at the discretion of the registered Professional Engineer for all or any part of RTP vessels.

*(c)* If specific rules of Subpart 3A do not apply, Subpart 3B design methods shall be used. Rules and limitations in Subpart 3A only apply to Subpart 3A.

*(d)* For vessels with an internal diameter greater than 16 ft, any vessel with a noncircular cross section, and any vessel using oblated shell sections, Subpart 3B design rules shall be used.

## 3-200 GENERAL

The following parameters are common to all RTP equipment.

*(a)* The heads of RTP vessels shall be fabricated by contact molded laminates.

*(b)* The cylindrical shells of RTP equipment may be fabricated by contact molding or filament winding.

*(c)* Contact molded or filament wound laminate thicknesses are calculated for internal loadings and external loadings in accordance with the rules and procedure in Subpart 3A or 3B.

*(d)* Laminates shall be selected so that imposed load(s) does not produce stresses or strains in excess of those specified in Subpart 3A or Subpart 3B, as applicable.

*(e)* Ultimate tensile strength and modulus values of all types of laminates may require reduction when temperatures above 180°F are encountered. See para. 2A-300 or 2B-200 for design temperatures above 180°F.

*(f)* The average thickness of any pressure-containing part of a vessel shall not be less than 0.22 in. The procedure to determine the thickness of such a part is specified in para. 6-920(f)(2). The permissible thickness tolerance of such a part is specified in Subpart 2C.

*(g)* The minimum ultimate axial tensile strength shall be 9,000 psi for all laminate construction.

# SUBPART 3A
# DESIGN BY RULES

## 3A-100 LOADINGS

As a minimum, the loadings to be considered in designing RTP vessels shall include the following:

*(a)* external and internal pressure, including the additional pressure resulting from the static head of the contents;

*(b)* weight of the vessel and contents under operating conditions;

*(c)* superimposed static loads from machinery, other vessels, insulation, personnel, or platforms;

*(d)* attachments:

*(1)* internal (baffles, weirs, packing, etc.);

*(2)* external (lugs, support rings, legs, skirts, etc.);

*(e)* dynamic, such as fluid agitation, subliquid surface jets;

*(f)* environmental, such as snow, wind, and seismic loadings;

*(g)* thermal expansion and stresses caused by thermal gradients or restrained expansion; and

*(h)* any other combination of loads specified in the UBRS.



Copyright ASME International
Provided by IHS under license with ASME
No reproduction or networking permitted without license from IHS

Not for Resale

## (a) 3A-200 DESIGN FOR TOTAL INTERNAL PRESSURE

### 3A-210 Calculation of Minimum Thickness of Cylindrical Shells

*(a)* Contact molded construction is calculated as follows:

$$\text{Hoop Loading} \quad t_h = \frac{PD_i}{2S_h/F} \qquad \text{Axial Loading} \quad t_a = \frac{N_{ax}}{S_a/F}$$

where

$D_i$ = inside diameter, in.
$F$ = design factor = 10
$N_{ax}$ = axial force per circumferential inch of shell, lb/in.
$P$ = total internal pressure, psig (internal pressure plus hydrostatic head)
$S_a$ = ultimate axial tensile strength, psi
$S_h$ = ultimate hoop tensile strength, psi
$t_a$ = total wall thickness, in., for axial stress
$t_h$ = total wall thickness, in., for circumferential stress

The shell thickness shall be the greater of $t_a$ or $t_h$ at the point considered by the calculation.

*(b)* Filament wound construction is calculated as follows:

$$\text{Hoop Loading} \quad t_h = \frac{PD_i}{2(0.001E_h)} \qquad \text{Axial Loading} \quad t_a = \frac{N_{ax}}{S_a/F}$$

where

$E$ = hoop tensile modulus

The shell thickness shall be the greater of $t_a$ or $t_h$ at the point considered by the calculation.

### 3A-220 Design of Cylindrical Shells Under Combined Axial Loads

**3A-221 Tensile Loads.** The thickness of shells under combined axial tensile loads shall be equal to the largest value for $t$ as calculated below.

*(a)* Shells under internal pressure must meet the requirements of para. 3A-210.

*(b)* For shells under combined axial tensile operating loads, $t$ shall be calculated as follows:

$$t = \frac{M_A}{\pi(D/2)^2(S_a/F)} + \frac{F_A}{\pi D(S_a/F)} + \frac{PD}{4(S_a/F)}$$

where

$D$ = inside diameter, in.
$F$ = design factor = 10
$F_A$ = axial tensile force resulting from operating loads, lb
$M_A$ = bending moment resulting from operating loads, in.-lb
$P$ = internal pressure, psi
$S_a$ = ultimate axial tensile strength, psi

*(c)* For shells under combined axial tensile loads resulting from operating loads and wind, snow, or seismic loads, $t$ shall be calculated as follows:

$$t = \frac{|M_A| + |M_B|}{\pi(D/2)^2(S_a/F)} + \frac{F_A + F_B}{\pi D(S_a/F)} + \frac{PD}{4(S_a/F)}$$

where

$F$ = design factor = 5
$F_B$ = axial tensile force resulting from wind, snow, or seismic loads, lb
$M_B$ = bending moment resulting from wind, snow, or seismic loads, in.-lb

**3A-222 Compressive Loads.** The thickness of shells under combined axial compressive loads shall be equal to the largest value for $t$ as calculated below.

*(a)* Shells under external pressure must meet the requirements of para. 3A-310.

*(b)* For shells under combined axial compressive operating loads, $t$ shall be the greater of $t_1$ or $t_2$ calculated as follows:

$$t_1 = \frac{|M_A|}{\pi(D/2)^2(S_a/F_1)} + \frac{|F_A|}{\pi D(S_a/F_1)} + \frac{P_eD}{4(S_a/F_1)}$$

$$t_2 = \left\{\left[\frac{|M_A|}{\pi(D/2)^2} + \frac{|F_A|}{\pi D} + \frac{P_eD}{4}\right]\frac{F_2(D/2)}{0.3E_{eff}}\right\}^{0.5}$$

where

$D$ = inside diameter, in.
$E_{eff}$ = $(E_{af}E_{ht})^{0.5}$
$E_{af}$ = axial flexural modulus, psi
$E_{ht}$ = hoop tensile modulus, psi
$F_A$ = axial compressive force resulting from operating loads, lb
$F_1$ = design factor = 10
$F_2$ = design factor = 5
$M_A$ = bending moment resulting from operating loads, in.-lb



Copyright ASME International
Provided by IHS under license with ASME
No reproduction or networking permitted without license from IHS
Not for Resale

$P_e$ = external pressure, psi
$S_a$ = ultimate axial tensile strength, psi

*(c)* For shells under combined axial compressive loads resulting from operating loads and wind, snow, or seismic loads, $t$ shall be the greater of $t_1$ or $t_2$ calculated as follows:

$$t_1 = \frac{|M_A| + |M_B|}{\pi(D/2)^2(S_a/F_1)} + \frac{|F_A| + |F_B|}{\pi D(S_a/F_1)} + \frac{P_e D}{4(S_a/F_1)}$$

$$t_2 = \left\{\left[\frac{|M_A| + |M_B|}{\pi(D/2)^2} + \frac{|F_A| + |F_B|}{\pi D} + \frac{P_e D}{4}\right]\frac{F_2(D/2)}{0.3E_{eff}}\right\}^{0.5}$$

where
$F_B$ = axial compressive force resulting from wind, snow, or seismic loads, lb
$F_1$ = design factor = 5
$F_2$ = design factor = 5
$M_B$ = bending moment resulting from wind, snow, or seismic loads, in.-lb

## 3A-230 Minimum Thickness of Torispherical Heads

The minimum thickness $t$ of torispherical heads shall be calculated as follows:

$$t = \frac{MPR_c}{2(S_u/F)}$$

where
$M = \frac{1}{4}[3 + (R_c/r)^{0.5}]$
$R_c$ = head crown radius, in. $\leq D_i$
$r$ = head knuckle radius, in. $\geq 0.06R_c$
$S_u$ = ultimate tensile strength, psi

For a torispherical head where $R_c = D_i$ and $r = 0.06R_c$, the minimum thickness $t$ reduces to:

$$t = \frac{0.885PR_c}{S_u/F}$$

For torispherical heads subject to internal loading, the knuckle radius shall be externally reinforced in accordance with Fig. 4-2, sketch (a). The reinforcement thickness shall be equal to the thickness of the head as calculated above. The thickness of a joint overlay near the knuckle radius tangent line of a dished head contributes to the knuckle reinforcement. For torispherical heads *not* subject to internal loading, see Fig. 4-2, sketch (b).

## 3A-240 Minimum Thickness of Ellipsoidal Heads

The minimum thickness of ellipsoidal heads (2:1) shall be calculated as follows:

$$t = \frac{PD_i}{2S_u/F}$$

## 3A-250 Minimum Thickness of Toriconical Heads (b)

*(a)* The minimum thickness of toriconical heads that have a half apex angle $\alpha$ not greater than 60 deg shall be calculated as follows.

The thickness of the conical portion $t_c$ of a toriconical head, where the knuckle radius is at least 6% of the inside diameter of the head skirt and not less than three times the knuckle thickness, shall be:

$$t_c = \frac{PD_c}{2\cos\alpha\,(S_u/F)}$$

where
$D_c$ = inside diameter of the conical portion of a toriconical head at the point of tangency to the knuckle, measured perpendicular to the axis of the cone (see Fig. 3-1), in.
= $D_i - 2r(1 - \cos\alpha)$
$D_i$ = inside diameter of head skirt (see Fig. 3-1), in.
$r$ = inside knuckle radius, in.
$\alpha$ = one-half of the included (apex) angle of the cone at the centerline of the head

The thickness of the knuckle $t_k$ shall be:

$$t_k = \frac{0.5MPR_c}{S_u/F}$$

where
$M = 0.25(3 + \sqrt{R_c/r})$
$R_c = D_c/(2\cos\alpha)$

and $r \geq 3t_k$. If not, change inside knuckle radius or use Subpart 3B.

For toriconical heads, compute the knuckle reinforcement length as follows:

$$L_c = \sqrt{\frac{D_i t_k}{\cos\alpha}}$$

*(b)* Toriconical heads having a half apex angle $\alpha$ greater than 60 deg shall comply with Subpart 3B.

*(c)* For toriconical heads subject to internal loading,



Copyright ASME International
Provided by IHS under license with ASME
No reproduction or networking permitted without license from IHS
Not for Resale

the knuckle radius shall be externally reinforced in accordance with Fig. 4-2, sketch (a). The total reinforced knuckle thickness $2t_k$ shall be calculated in accordance with the rule in para. 3A-250(a). The thickness of a joint overlay near the knuckle radius tangent line of a toriconical head contributes to the knuckle reinforcement. For toriconical heads not subject to internal loading, see Fig. 4-2, sketch (b).

*(d)* When Subpart 3A design rules are used, the secondary bond overlays shall be in accordance with para. 4-320.

*(e)* Openings for bottom nozzles in toriconical heads are limited to 10% of the toriconical head diameter. Openings greater than 10% require special consideration and stress levels must satisfy the limits of Subpart 3B.

## 3A-260 Minimum Thickness of Flat Bottom Heads

*(a)* The minimum thickness for fully supported flat bottom heads using Type I laminates, subject to hydrostatic pressure only, shall be as follows:

*(1)* 0.27 in. for inside diameters ≤ 72 in.

*(2)* 0.31 in. for inside diameters > 72 in. to ≤ 96 in.

*(3)* 0.40 in. for inside diameters > 96 in. to ≤ 144 in.

*(4)* See subpara. (c) below for diameters over 144 in.

*(b)* The minimum thickness for fully supported flat bottom heads using Type II laminates, subject to hydrostatic pressure only, shall be as follows:

*(1)* 0.22 in. for inside diameters ≤ 72 in.

*(2)* 0.29 in. for inside diameters > 72 in. to ≤ 96 in.

*(3)* 0.37 in. for inside diameters > 96 in. to ≤ 144 in.

*(4)* See subpara. (c) below for diameters over 144 in.

The thicknesses given in (1), (2), and (3) above have proven adequate to prevent damage during normal conditions associated with fabrication, handling, shipping, and installation.



Copyright ASME International
Provided by IHS under license with ASME
No reproduction or networking permitted without license from IHS
Not for Resale

*(c)* For inside diameters that exceed 144 in., design analysis shall be undertaken to establish a bottom thickness that will withstand the conditions in subpara. (b) above without resultant damage.

*(d)* The radius of the bottom knuckle of a flat bottom vessel shall not be less than 1 in. if the diameter is 4 ft or less, and 1½ in. for diameters exceeding 4 ft. The minimum thickness of the radius section shall be equal to the combined thickness of the shell wall and the bottom. The reinforcement of the knuckle radius area shall taper so that it is tangent with the flat bottom, and shall not extend beyond the tangent line onto the tank bottom. The knuckle reinforced area shall extend for a minimum distance of 8 in. from the inside tank bottom up the vertical wall for tanks up to and including 4 ft in diameter, and 12 in. for tanks over 4 ft in diameter. The reinforcement shall then taper into the side wall for an additional length of 4 in. (see Fig. 4-3). The perimeter of the tank bottom shall be a flat plane, and the bottom shall have no projections that exceed ¼ in. and that will prevent uniform contact with a flat support surface when the tank is filled with liquid. While Fig. 4-3, sketches (a) and (d), show a joint line, it is permissible to fabricate the head integral with the shell (no joint required). This method of manufacture requires reinforcement of the knuckle radius area as described above [see Fig. 4-3, sketch (c)].

*(e)* The design of flat heads that are unsupported by a foundation over their entire flat surface or are loaded by external pressure is not included in Subpart 3A. Such designs may be carried out using Subpart 3B rules. See Appendix NM-13.

*(f)* The design of flat heads that are supported by a foundation over the entire flat surface and are loaded by internal pressure requires the use of hold-down lugs to prevent the vessel from lifting. The lugs and the knuckle must be designed to withstand the moments induced because of uplift in addition to the other loads. The design factor for RTP components shall be 10 for pressure loading or 5 for pressure combined with wind, seismic, and other temporary loads, whichever governs. The size and number of the anchor bolts are part of the hold-down design. The depth and attachment of the anchor bolts to the concrete foundation, as well as the integrity of the foundation, are not considered part of the scope.

### 3A-270 Minimum Thickness of Hemispherical Heads

For hemispherical heads under internal pressure, compute the minimum thickness $t$ as follows:

$$t = PR_s/2S_a$$

where

$P$ = design internal pressure, psi
$R_s$ = inside radius of head, in.
$S_a$ = allowable stress, psi

## 3A-300 DESIGN FOR EXTERNAL PRESSURE

### 3A-310 Cylindrical Shells

The maximum allowable external pressure between stiffening elements is computed by the following:

$$P_a = \frac{K(E_r/F)(D_o/L)(t/D_o)^{2.5}}{1 - 0.45(t/D_o)^{0.5}}$$

where

$D_o$ = outside diameter, in.
$E_r$ = $(E_aE_h)^{0.5}$ = resultant modulus, psi
$E_a$ = axial tensile modulus, psi
$E_h$ = hoop tensile modulus, psi
$F$ = design factor = 5
$K$ = $4.0 - 0.75(E_r/10^6)$ for all types of laminates
$L$ = design length of a vessel section, in., taken as the largest of the following:

*(a)* the distance between head-tangent lines plus one-third the depth of each formed head, if there are no stiffening rings (excluding conical heads and sections);

*(b)* the distance between cone-to-cylinder junctions for vessels with cone or conical heads, if there are no stiffening rings;

*(c)* the greatest center-to-center distance between any two adjacent stiffening rings;

*(d)* the distance from the center of the first stiffening ring to the formed head tangent line plus one-third the depth of the formed head (excluding conical heads and sections), all measured parallel to the axis of the vessel;

*(e)* the distance from the first stiffening ring in the cylinder to the cone-to-cylinder junction.

$P_a$ = allowable external pressure, psi
$t$ = wall thickness, in. (nominal)



Copyright ASME International
Provided by IHS under license with ASME
No reproduction or networking permitted without license from IHS
Not for Resale

### 3A-320 Torispherical and Elliptical Heads

For torispherical heads, compute the allowable external pressure $P_a$ as follows:

$$P_a = 0.36(E_f/F)(t/R_o)^2$$

For torispherical heads, compute the minimum thickness $t$ as follows:

$$t = R_o(FP_d/0.36E_f)^{0.5}$$

For elliptical heads, compute the allowable external pressure $P_a$ as follows:

$$P_a = 0.36(E_f/F)(t/K_oD_o)^2$$

For elliptical heads, compute the minimum thickness $t$ as follows:

$$t = K_oD_o(FP_d/0.36E_f)^{0.5}$$

where

$D_o$ = outside diameter of shell, in.
$E_f$ = flexural modulus of elasticity for head, psi
$K_o$ = factor depending on ellipsoidal head proportions as follows:

| Major to Minor Axis Ratio | $K_o$ |
|---|---|
| 2.0 | 0.90 |
| 1.8 | 0.81 |
| 1.6 | 0.73 |
| 1.4 | 0.65 |
| 1.2 | 0.57 |
| 1.0 | 0.50 |

$P_a$ = allowable external pressure, psi
$P_d$ = design external pressure, psi
$R_o$ = outside crown radius of head, in.

### (00) 3A-330 Stiffening Rings

The required moment of inertia $I_s$ of a circumferential stiffening ring for cylindrical shells under external pressure or internal vacuum shall not be less than that determined by the following formula:

$$I_s = PL_sD_o^3F/24E_h$$

where

$D_o$ = shell outside diameter, in.
$E_h$ = hoop tensile modulus, psi
$F$ = design factor = 5
$I_s$ = moment of inertia, in.$^4$, of stiffener and effective length of shell. The effective length of shell shall not be greater than the length of the shell under the ring plus no more than $0.55(D_ot)^{0.5}$ on each side of the centroid of the ring. Portions of shell shall not be considered as contributing to more than one stiffening ring.
$L_s$ = one-half of the distance from the centerline of the stiffening ring to the next line of support on one side, plus one-half of the centerline distance to the next line of support on the other side of the stiffening ring, both measured parallel to the axis of the cylinder, in. A line of support is:

*(a)* a stiffening ring that meets the requirements of this paragraph;

*(b)* a circumferential line on a head at one-third the depth of the head from the head tangent line;

*(c)* a cone-to-cylinder junction.

$P$ = actual external pressure, psi
$t$ = wall thickness of shell, in. (nominal)

Typical half-round stiffener sizes and dimensions for different values of $I_s$ are shown in Fig. 4-4. Other stiffener profiles meeting the required moment of inertia may be used.

### 3A-340 Top Head Loads

The top head, regardless of shape, shall be designed to support a 250 lb load on a 16 sq in. compact area without damage and with a maximum deflection of 0.5% of the shell diameter, or 0.5 in., whichever is less. For torispherical heads, this requirement can be satisfied by using the method presented in Appendix NM-11.

### 3A-350 Toriconical Heads (00) (b)

*(a)* For toriconical heads whose half apex angle $\alpha$ is $\leq 60$ deg, the maximum allowable external pressure between stiffening elements is computed by the following:

$$P_a = \frac{K(E_{rc}/F)(D_o/L)[(t_c \cos \alpha)/D_o]^{2.5}}{1 - 0.45[(t_c \cos \alpha)/D_o]^{0.5}}$$

Also check for stress in the cone $S_c$ as follows:



Copyright ASME International
Provided by IHS under license with ASME
No reproduction or networking permitted without license from IHS
Not for Resale

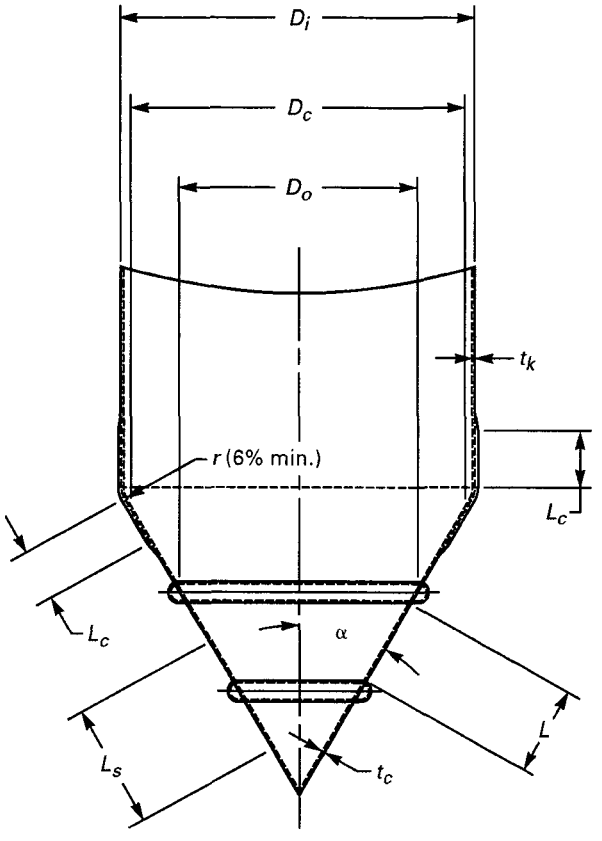


**(00) (b) FIG. 3-1 TORICONICAL HEAD DIMENSION**

$$S_c = \frac{P_d D_c}{2t_c \cos \alpha}$$

The stress $S_c$ must not exceed $S_u/F$.

For toriconical heads, compute the knuckle reinforcement length as follows:

$$L_c = \sqrt{\frac{D_i t_k}{\cos \alpha}}$$

The thickness of the knuckle $t_k$ shall be:

$$t_k = \frac{0.5MP_d R_c}{S_u/F}$$

where

$D_c$ = $D_i - 2r(1 - \cos \alpha)$, in.
$D_i$ = inside diameter of the conical portion of a toriconical head at the point of tangency to the knuckle, measured perpendicular to the axis of the cone (see Fig. 3-1), in.
$D_o$ = maximum outside diameter at the large end of the conical segment between stiffening elements (see Fig. 3-1), in.
$E_{ac}$ = axial tensile modulus for the cone, psi
$E_{hc}$ = hoop tensile modulus for the cone, psi
$E_{rc}$ = resultant modulus for the cone, psi = $(E_{ac}E_{hc})^{0.5}$
$F$ = design factor = 5
$K$ = $4 - 0.75(E_{rc}/1{,}000{,}000)$
$L$ = conical segment slant height (see Fig. 3-1), in.
$M$ = $0.25(3 + \sqrt{R_c/r})$
$P_a$ = allowable external pressure, psi
$P_d$ = design external pressure, psi
$r$ = inside knuckle radius (see Fig. 3-1), in. (6% minimum and at least three times the knuckle thickness)
$R_c$ = $D_c/(2 \cos \alpha)$
$S_u$ = ultimate tensile strength, psi
$t_c$ = cone thickness (see Fig. 3-1), in.
$t_k$ = knuckle thickness (see Fig. 3-1), in.
$\alpha$ = one-half the apex angle in toriconical heads and sections (see Fig. 3-1), deg

*(b)* When the half apex angle $\alpha$ exceeds 60 deg, the toriconical head shall be designed in accordance with Subpart 3B.

*(c)* For toriconical heads subject to external pressure, the knuckle radius shall be externally reinforced in accordance with Fig. 4-2, sketch (a). The total knuckle thickness $t_k$ shall be calculated in accordance with the rule in para. 3A-350(a). The thickness of a joint overlay near the knuckle radius tangent line of a toriconical head contributes to the knuckle reinforcement. For toriconical heads not subject to external or internal pressure, see Fig. 4-2, sketch (b).

*(d)* When Subpart 3A design rules are used, the secondary bond overlays shall be in accordance with para. 4-320.

### 3A-360 Stiffening Rings (b)

The required moment of inertia $I_s$ of a circumferential stiffening ring for conical shells under external pressure shall not be less than that determined by the following formula:

$$I_s = \frac{P_d L_s (D_o/\cos \alpha)^3 F}{24E_{hs}}$$

where

$E_{hs}$ = hoop tensile modulus for the stiffening ring, psi



Copyright ASME International
Provided by IHS under license with ASME
No reproduction or networking permitted without license from IHS
Not for Resale

$L_s$ = one-half of the conical segment slant distance from the centerline of the stiffening ring to the next line of support on one side, plus one-half of the conical segment slant distance from the centerline of the stiffening ring to the next line of support on the other side (see Fig. 3-1), in. A line of support is:

*(a)* a stiffening ring that meets the requirements of this paragraph;

*(b)* a toriconical head-to-cylinder junction;

*(c)* apex of a toriconical head.

## 3A-400 SEISMIC, WIND, AND SNOW LOADINGS

### (00) 3A-410 Design Loadings

The loadings to be considered in designing vessels shall include seismic loads, wind loads, and snow loads, determined by vessel installation, location, and customer specification as defined in the UBRS. The effects of liquid sloshing in large vessels shall be considered. The design shall be certified by a qualified registered Professional Engineer experienced in the design of reinforced plastics.

### 3A-420 Specifying Design Loadings

The magnitude and orientation of the forces enumerated in para. 3A-410 shall be as specified by the UBRS (see para. 1-200). Examples of codes and design calculations are shown in Appendix NM-3.

### 3A-430 Assumed Design Loadings

The vessel design shall be analyzed under the following loading combinations:

*(a)* operating loads plus seismic load;

*(b)* operating loads plus snow load;

*(c)* operating loads plus wind load;

*(d)* wind loads on an empty vessel.

Seismic, wind, and snow loads are considered to act separately. The forces are not cumulative.

### 3A-440 Stresses From Loadings

Stresses produced by seismic, wind, or snow loading, in conjunction with any appropriate working stresses, shall be less than $S_u/5$, a design factor of 5 for contact molded construction. For filament wound construction, the hoop strain shall be less than 0.002 in./in. and the axial stress shall be less than $S_u/5$.

### 3A-450 Loading Design Examples

Examples of wind and snow load design are given in Appendix NM-3. The wind load calculations are for static loading only and do not consider the effect of stress buildup due to resonant vibrations, which may be a factor in tall structures. These examples are given to illustrate the extent of analysis necessary to verify the resistance of equipment to these loads. Other methods of analysis may be used, provided that all of the stresses induced by these loads are considered and satisfy the requirements of Part 3.

### 3A-460 Hold-Down Lugs (00) (b)

Concentrated loadings resulting from hold-down lugs shall be calculated. A design method for hold-down lugs is given in Appendix NM-4. When hold-down lugs are attached in the shop or in the field, the attachment of the hold-down lugs shall be performed by secondary bonders qualified in accordance with Appendix M-5, and the vessel pressure test per para. 6-950 shall be performed after the attachment of the lugs. Final inspection per para. 6-900 shall be completed after the hold-down lug attachment and testing have been completed. The Fabricator retains overall responsibility for all field work, testing, and inspection.

The hold-down lug shall be parallel to and above the datum plane for flat-bottom vessels as shown in Fig. 4-1. Appendix NM-4 suggests a minimum dimension of $\frac{1}{2}$ in. between the datum plane and the bottom of the hold-down lug.

## 3A-500 LARGE DIAMETER RTP EQUIPMENT BODY FLANGES

A method for designing flanges with full-face gaskets is given in Appendix NM-2. Dimensions and allowable pressures for representative flanges with full-face gaskets are given in Table NM2-2. The maximum allowable design stress value shall be 3,000 psi for flanges constructed of Type II laminates and 1,800 psi for flanges constructed of Type I laminates.

## 3A-600 VESSELS SUPPORTED BY SHELL ATTACHMENTS

Where the vessel is supported by attachments to the shell, the attachments and associated reinforcement shall be designed to avoid exceeding allowable stresses both in the attachments and the shell. Attachments may be fabricated from RTP or metal as agreed upon by the User and the Fabricator.



Copyright ASME International
Provided by IHS under license with ASME
No reproduction or networking permitted without license from IHS

Not for Resale

The use of support lugs for vertical cylindrical vessels requires consideration of the forces caused by eccentric loading of the lugs. In small vessels, these radial forces may be accommodated by reinforcement of the shell. In vessels larger than 3 ft inside diameter, some type of a metallic ring–lug support should be used. A design method for metallic ring–lug supports is presented in Appendix NM-5.

## 3A-700 REINFORCEMENT OF CIRCULAR OPENINGS

*(a)* Openings cut in cylindrical shells and heads for installation of nozzles and manways shall be reinforced by a circular area concentric with the cutout shown in Figs. 4-8 and 4-9. Required patterns of reinforcement placement are shown in Fig. 4-10.

*(b)* Only circular openings whose diameter does not exceed one-half of the vessel's diameter are covered by these rules. Openings of other geometries and openings whose diameter exceeds one-half of the vessel diameter require special consideration and stress levels must satisfy the limits of Subpart 3B.

*(c)* For circular nozzles, only openings with the largest dimension along one axis being no longer than two times the largest dimension along the axis 90 deg to the first axis are covered by these rules. These dimensions shall be measured from one cut edge to the opposite cut edge (the chord is measured in the hoop direction).

*(d)* These rules only cover reinforcement of cylinders and dished, elliptical, or conical heads using the thickness equations shown in Subpart 3A.

## (b) 3A-710 Wall Thickness Definitions

$T_a$ = actual structural wall thickness, in.
= wall thickness obtained after fabrication, not including any sacrificial corrosion barrier

$T_c$ = calculated structural wall thickness, in.
= wall thickness planned on being used to fabricate the vessel; calculated by summing the theoretical thickness of each layer, not including any sacrificial corrosion barrier

$T_t$ = theoretical structural wall thickness, in.
= minimum wall thickness that will satisfy the design conditions; does not include sacrificial corrosion barrier if it is specified

EXAMPLE: The design calculations determined that the wall thickness must be at least 0.242 in. ($T_t$). A 0.29 in. ($T_c$) wall thickness is planned on being fabricated, but after fabrication it actually turned out to be 0.322 in. ($T_a$).

$D$ = vessel inside diameter, in.

$d$ = nozzle's largest hole dimension, in.

$K$ = 1 for nozzles ≥ 6 in.
= $d/6$ for nozzles < 6 in.

$M$ = 1 for Type I or II laminates
= $\sigma/15{,}000$ for Type X laminates

$T$ = vessel wall thickness

$t$ = nozzle wall thickness

$t_r$ = reinforcement thickness, in.

$V$ = 1 for internal pressure
= ½ for external pressure

$\sigma$ = hoop tensile ultimate strength for cylinders, psi
= tensile ultimate strength for heads, psi

## 3A-720 Reinforcement Diameter

The outer diameter of the opening reinforcing laminate $d_r$ shall not be less than two times the opening's largest dimension. For openings with largest dimension less than 6 in., the minimum opening reinforcement diameter $d_r$ shall be the largest dimension plus 6 in.

The reinforcing diameters $d_r$ of two openings shall not overlap.



Copyright ASME International
Provided by IHS under license with ASME
No reproduction or networking permitted without license from IHS
Not for Resale

### 3A-730 Reinforcement Thickness

*(a)* Reinforcing materials shall always be Type II, except Type I reinforcing can be used on Type I laminates.

*(b)* $T_a$ over and above $T_c$ shall not be considered to have reinforcing value.

*(c)* When $t_r < 0.129$, no reinforcing is required.

*(d)* $t_r = VMKT_t - M(T_c - T_t)$.

*(e)* Opening reinforcement thickness which must be added to the wall may be applied to the outer or inner surfaces, or be divided between them as shown in Fig. 4-10. Beyond the limits of $d_r$, the added opening reinforcement thickness shall be tapered onto the shell at not less than 1:6.

### 3A-800 SECONDARY BOND SHEAR STRESS

The allowable secondary bond shear stress is 200 psi.

## SUBPART 3B
## DESIGN BY STRESS ANALYSIS

### 3B-100 INTRODUCTION

Either vessel or vessel part may be designed using the stress analysis methods listed in this subpart. The Subpart 3B design process consists of two steps: (1) the biaxial stress analysis must be performed at points of concern as determined by the design Professional Engineer, and (2) the stress analysis results of the vessel or vessel part must fall within the limits established by para. 3B-500.

Various methods may be used to determine the biaxial stress state in the laminate. These methods are:

*(a)* the stress analysis methods of Appendix NM-13 which are adapted from Section VIII, Division 2 of the ASME Boiler and Pressure Vessel Code;

*(b)* the finite element method;

*(c)* closed form solutions that yield the complete biaxial state of stress;

*(d)* back calculation of the biaxial state of stress using strain gage data;

*(e)* other mathematical and/or experimental techniques, provided they are as accurate or as conservative, in the opinion of the design Professional Engineer, in determining the biaxial state of stress as those listed above.

The stress criteria are different because of the brittle behavior of RTP compared with steel and other ductile metals, and because of the anisotropic behavior of filament wound and other laminates containing continuous roving.

### 3B-200 DESIGN ACCEPTABILITY

The requirements for the acceptability of a design are:

*(a)* the design shall be such that the stress shall not exceed the limits described in the stress criteria in para. 3B-500;

*(b)* for configurations that involve external pressure or other loads defined in para. 3B-300, the load shall not exceed one-fifth of the critical buckling load.

### 3B-210 Basis for Determining Stresses

The equivalent stress ratio at any point in a vessel is the value of stress ratio deduced from the stress condition at the point by means of a theory of failure. The theory of failure used in the rules of this subpart for combining stresses is the quadratic interaction criterion. It is applicable to the most general combination of isotropic and anisotropic lamina allowed by this Standard. The stress analysis and evaluation shall include the directional properties of the laminate and individual lamina, and shall take into account the primary and secondary stresses caused by gross structural discontinuities.

### 3B-220 Terms Relating to Stress Analysis

Terms used in this subpart relating to stress analysis are defined below.

*(a) Gross Structural Discontinuity.* A gross structural discontinuity is a source of stress or strain intensification that affects a relatively large portion of a structure and has a significant effect on the overall stress or strain pattern or on the structure as a whole.

Examples of gross structural discontinuities are head-to-shell and body-flange-to-shell junctions, and junctions between shells of different diameters or thicknesses.

*(b) Load Stress.* A load stress is a stress that results from the application of a load, such as internal pressure or the effects of gravity, as distinguished from thermal stress.

*(c) Local Primary Membrane Stress.* Cases arise in which a membrane stress produced by pressure or other mechanical loading and associated with a primary and/or a discontinuity effect would, if not limited, produce excessive distortion in the transfer of load to other portions of the structure. Such stresses are termed local primary membrane stress.



--`,,,,,,-`-`,,`,,`,`,,`---

Copyright ASME International
Provided by IHS under license with ASME
No reproduction or networking permitted without license from IHS
Not for Resale

An example of a local primary membrane stress is the membrane stress in the shell produced by external load and moment at a permanent support.

*(d) Membrane Stress.* The membrane stress is defined as the component of normal stress which is uniformly distributed and equal to the average value of stress across the thickness of the section under consideration.

*(e) Moment Resultant.* The intersection of the reference surface and the section under consideration defines an intersection line. The moment resultant is the moment of the normal stress about the intersection line. It is the bending moment per unit length in the laminate. (See Appendix M-3, Fig. M3-14.) The location of the reference surface is chosen by the engineer. The reference surface used to define the stress resultants must be the same as that used to compute stiffness coefficients.

*(f) Normal Force Resultant.* The normal force resultant is the resultant force of the normal stresses in all the lamina at the section under consideration.

*(g) Normal Stress.* The normal stress is the component of stress normal to the plane of reference. Usually the distribution of normal stress is not uniform through the thickness of a lamina. The stress is considered to be made up of two components, one of which is uniformly distributed and equal to the average value of the stress across the lamina of the section under consideration, and the other of which varies with the location across the lamina.

*(h) Off-Axis Coordinates.* The off-axis coordinates are coordinates chosen by the engineer. They coincide with the vessel coordinates. (See Fig. M3-17.)

*(i) On-Axis Coordinates.* The on-axis coordinates are a collection of sets of axes, one for each lamina. The $x$-axis of a set is aligned with the reinforcement, and the $y$-axis is perpendicular to the $x$-axis and lies in the plane of the lamina. The $x$–$y$ axes or on-axis systems are also called the *principal material axis systems.* (See Fig. M3-17.)

*(j) Primary Stress.* A primary stress is a normal stress or a shear stress developed by the imposed loading. It is necessary to satisfy the laws of equilibrium of external or internal forces and moments.

The basic characteristic of a primary stress is that it is not self-limiting. Primary stresses that considerably exceed the stress at onset of cracking will result in failure or at least in gross distortion. A thermal stress is not classified as a primary stress.

Examples of primary stress are:

*(1)* the general membrane stress in a circular cylindrical or a spherical shell due to internal pressure or distributed live loads;

*(2)* the bending stress in the central portion of a flat head due to pressure.

*(k) Reference Surface.* The reference surface is a surface that is parallel to the lowermost surface of the laminate. The distance from the lowermost surface is chosen by the engineer. Common choices are the surface midway between the outermost and innermost laminate surfaces or the neutral bending surface (see para. M3-200). In the case of symmetric laminates, these choices coincide.

*(l) Shear Force Resultant.* The shear force resultant is the resultant force of the shear stresses in all the lamina at the section under consideration. It is the shear force per unit length in the plane of the laminate.

*(m) Shear Stress.* The shear stress is defined as the component of stress tangent to the plane of reference.

*(n) Secondary Stress.* A secondary stress is a normal stress or a shear stress developed by the constraint of adjacent parts or by self-constraint of a structure. The basic characteristic of a secondary stress is that it is self-limiting. Local inelastic deformation and minor distortions can satisfy the conditions which cause the stress to occur.

Examples of secondary stress are:

*(1)* general thermal stress;

*(2)* bending stress at a gross structural discontinuity.

*(o) Strength Ratio.* The strength ratio is defined as the lowest value by which each component in the stress state at a point could be multiplied so that the multiplied stress state would violate the failure criterion in para. 3B-500.

*(p) Thermal Stress.* A thermal stress is a self-balancing stress produced by a nonuniform distribution of temperature or by adjoining parts with different thermal coefficients of expansion. Thermal stress is developed in a solid body whenever a volume of material is prevented from assuming the size and shape that it normally would under a change in temperature.

*(q) Twisting Moment Resultant.* At each point along the intersection of the reference surface and a section under consideration, the twisting moment resultant is the moment of the shear stress about the point. (See Fig. M3-14.)

*(r) Closed Form Solution.* A closed form solution is a mathematically exact solution or series of equations that accurately describes the state of stress without being based on empirical data.



Copyright ASME International
Provided by IHS under license with ASME
No reproduction or networking permitted without license from IHS

Not for Resale

## 3B-300 LOADING

All vessels shall be designed to resist the hydrostatic load. Top heads, or other surfaces where personnel might walk, shall be designed to support a 250 lb load on a 16 sq in. compact area without exceeding the stress criteria of para. 3B-500, and with a deflection ≤ 0.5% of the vessel diameter or width.

Vessels shall also be designed to withstand the following load combinations without violating the criterion of para. 3B-500. The magnitude of each of the loads is defined by the UBRS (see para. 1-200):

*(a)* internal pressure above the liquid contents, superposed on the hydrostatic pressure;

*(b)* loads on support ring or lugs from the vessel weight, the contents weight, and imposed loads;

*(c)* external pressure;

*(d)* seismic load, which shall be considered as acting at the same time as the hydrostatic and pressure loads, but not simultaneous with maximum wind loads. The vessel shall resist the seismic loads without exceeding the criteria of para. 3B-500, as required by local codes. See Appendix NM-3;

*(e)* loads from attachments, such as ladder clips, agitators, and lifting lugs;

*(f)* loads from internal parts, such as baffles and packing supports;

*(g)* load on nozzles due to flow forces and pressure (as in the case of manways and other nozzles with blind flanges);

*(h)* loading that results from thermal expansion, and stresses caused by thermal gradients;

*(i)* snow loads, which shall be considered as acting at the same time as the hydrostatic and pressure loads, but not simultaneous with seismic or wind loads;

*(j)* wind load, which shall be considered as acting at the same time as the hydrostatic and pressure loads, but not simultaneous with seismic or snow loads;

*(k)* wind load on an empty vessel;

*(l)* loadings due to the temporary oblation of circular shell sections;

*(m)* any other combination of loads specified in the UBRS.

## 3B-400 DESIGN

The stress distribution, at all the critical points on the vessel, shall be calculated for the specified loading combination, or other combinations of operating loads, that produces the most severe stress condition.

The stress components from different types of loads that may be applied simultaneously are summed algebraically.

The design factor is calculated at each critical point on the vessel using the procedures of Appendix M-3.

## 3B-500 STRESS CRITERIA

For all loading conditions specified in para. 3B-300, and load combinations, the following strength ratios shall be used unless otherwise indicated in this Standard for specific loading conditions. The strength ratio in the inner surface and interior layer shall be as follows.

*(a)* For all vessels that are designed using combinations of Subparts 3A and 3B, the minimum strength ratio shall be 10.

*(b)* For all vessels that are designed entirely by Subpart 3B, the minimum strength ratio shall be 9.

*(c)* For all vessels that are designed entirely by Subpart 3B and for which an acoustic emission examination by Appendix M-8 is performed, the minimum strength ratio shall be 8.

*(d)* For all vessels designated for critical service, the minimum strength ratios in (a) through (c) above shall be multiplied by 1.25.

The minimum strength ratio in each layer in the rest of the laminate for each combination of loads shall be 1.6 for vessels not in critical service and 2 for vessels in critical service.

For wind and seismic loads, and for combinations of wind and seismic loads with operating loads, the strength ratios in (a), (b), (c), and in the preceding paragraph may be divided by 1.2.

Individual layers often have different elastic moduli due to the type and/or orientation of the reinforcement. At the same level of strain, the stress in these layers will be different. The strength ratio used for design in Subpart 3B is calculated for each layer, whereas the design factor used in Subpart 3A is based on the ultimate strength of the entire laminate.

If the strength ratio of any layer of the laminate is less than 1.6, then the designer must recognize and account for the possibility of reduced mechanical properties in the laminate.

*(e)* For loadings due to temporary oblation, the design factor shall be greater than or equal to 3.0, and the criterion for strength ratios of the laminate layers shall be as follows.

*(1)* The interior mat layers shall be greater than or equal to 3.0.



Copyright ASME International
Provided by IHS under license with ASME
No reproduction or networking permitted without license from IHS
Not for Resale

*(2)* The strength ratio of C-veil inner layers shall be greater than or equal to 3.0.

*(3)* The strength ratio of synthetic veil inner layers shall be greater than or equal to 2.0 when the veil is in tension, and be greater than or equal to 3.0 when the veil is in compression.

*(4)* The strength ratio of the structural layers shall be greater than or equal to 1.5, with the exception of axially oriented fiber layers which may be less than 1.0. Microcracking shall be permitted only in axially oriented fiber layers.

## 3B-600 EXTERNAL PRESSURE

The stress distribution resulting from external pressure must satisfy the criteria of para. 3B-500. In addition, to ensure elastic stability, the calculated buckling pressure of the vessel shall be at least five times the design external pressure. For dished heads and cylindrical shells fabricated of Type I or Type II laminates, the rules of para. 3A-300 may be used to calculate the allowable external pressure, satisfying the requirement for elastic stability.

Many vessels are constructed with Type X laminates which may be anisotropic. Anisotropy can have a strong influence on elastic stability and must be taken into account in design calculations.

## 3B-700 ATTACHMENTS

Attachments may be designed by stress analysis or by Subpart 3A rules. If they are designed by Subpart 3A rules, they must satisfy the lower allowable stresses of Subpart 3A.



Copyright ASME International
Provided by IHS under license with ASME
No reproduction or networking permitted without license from IHS
Not for Resale

# PART 4
# FABRICATION

## 4-100 SCOPE

Part 4 sets forth fabrication details that are used in conjunction with the design rules and procedures of Part 3. Figures 4-2, 4-3, 4-5, 4-8, and 4-9 are required only when Subpart 3A design rules are used. Figure 4-4 is an optional stiffener detail. All other figures and tables in Part 4 are required to be used in conjunction with the design rules of Subparts 3A and 3B. Where complete details are not given, it is intended that the Fabricator shall provide details of design and construction that shall be as safe as those provided by the rules of this Standard.

## 4-110 Fabrication Requirements

All fabrication shall satisfy all requirements of the User's Basic Requirements Specification and the Fabricator's Design Report using the fabrication procedures of Part 4 and drawings certified by the registered Professional Engineer.

## 4-120 Large Diameter Fabrication Details

For vessels over 16 ft inside diameter, the fabrication details given in Part 4 may be modified as long as the design loadings and stresses meet the requirements of Part 3B. The tolerances given in Part 4 shall be modified as follows: Maximum out-of-roundness shown in Fig. 4-1 shall not exceed $t/2$ or 1 in., whichever is less. Offset joints shall be ground or filled with reinforced resin putty and/or mat to a minimum taper of 4:1. Maximum putty thickness shall not exceed $\frac{1}{2}$ in. Joint width shall be increased by the width of the putty, if used. Oblated shell sections shall not contain any secondary bonds except for minor repair areas for the inner surface and interior layer.

## (b) 4-200 LARGE DIAMETER BODY FLANGES

Body flanges shall be flat and true to a required tolerance given in Table 4-3. If machining of the flange face is required, the machined surface shall have the original corrosion barrier restored and sealed with resin. All bolt holes shall be back spot-faced for ASME B18.22.1 Type A Narrow washers. Bolt holes and spot facing shall be resin coated. Overall machine facing of the back of flanges in lieu of spot facing is permitted, provided the hub is not undercut.

## 4-300 SHELL JOINTS

### 4-310 Shell-to-Shell Joints

Shell-to-shell joints shall be of either butt or bell-and-spigot construction as shown in Fig. 4-5. No longitudinal shell joints are permitted.

### 4-320 Secondary Bond Overlays

Secondary bond overlays shall comply with paras. (a) through (f) below.

*(a)* All cured laminate surfaces to be overlayed shall be roughened with 36 grit size abrasive medium or coarser for external surfaces and 60–80 grit size abrasive medium for the final internal surface preparation.

*(b)* The thickness of the overlay shall be the thickness required for an equivalent hand lay-up laminate regardless of the type laminate being joined. A Type II laminate structure, as shown in Table 2A-2, shall be used for overlays of Type II laminates. Type I laminate overlays, as shown in Table 2A-1, shall be used when making Type I laminate joints.

*(c)* The joint overlay to Type I contact molded laminates shall consist of chopped strand mat plies only. The number of plies shall be not less than the number of structural plies for the structural portion of the thickest laminate being joined, or 0.22 in. minimum. The first ply shall have a minimum width of 3 in. Each successive ply shall overlap the preceding ply by $\frac{5}{16}$ in. minimum on each side.

*(d)* The joint overlay for Type II contact molded laminates and for filament wound laminates shall consist of alternate plies of mat and woven roving equivalent to the structural portion of the thickest Type II laminate being joined, or 0.22 in. minimum. Minimum ply width shall be 3 in. The woven roving shall not be greater in width than the layer of chopped strand mat it follows. Each successive mat ply shall extend $\frac{1}{2}$ in. minimum beyond each side of the preceding mat ply.



Copyright ASME International
Provided by IHS under license with ASME
No reproduction or networking permitted without license from IHS

Not for Resale

*(e)* The corrosion resistant overlay shall consist of a minimum of three plies, each of 1½ oz chopped strand glass mat, with a minimum of one ply of surfacing mat on the surface exposed to the process environment. The minimum ply width shall be 3 in., with each successive layer of mat extending ½ in. minimum beyond each side of the preceding ply, followed by the surfacing mat extending ½ in. minimum beyond each side of the last ply of 1½ oz mat.

*(f)* Following gel and peak exotherm of the overlay, a paraffinated top coat of resin shall be applied over the surfacing mat and the adjacent roughened surface.

*(g)* The overlay width and thickness that result from using (c) and (d) above apply only to the following joints: torispherical head to shell, ellipsoidal head to shell, the joints shown in Fig. 4-3, cylindrical shell to cylindrical shell, and joints in the flat portion of a fully supported flat bottom. Nozzle installation overlays shall satisfy all the requirements of para. 4-430. For other overlay joints, the width and thickness shall be as determined by the design Professional Engineer, and the joint design shall be as safe as those provided by the rules of this Standard.

## 4-400 FLANGED NOZZLES

### 4-410 Fabricating Flanged Nozzles

All flanged nozzle necks may be fabricated by the hand lay-up or filament wound methods using Type I, II, or X laminates and in accordance with Figs. 4-6 and 4-7, and installed per Figs. 4-8 through 4-10. The thickness of nozzle necks given in Fig. 4-6 shall be the minimum thickness for all types of laminate construction used. In addition, if a filament wound laminate is used to fabricate the nozzle neck, the laminate properties shall be at least equivalent to those of a Type II hand lay-up laminate of equal thickness in both the hoop and axial directions. Nozzle flanges shall only be fabricated by the hand lay-up method using Type I or II laminates and in accordance with Figs. 4-6 and 4-7. The nozzle shall extend 6 in. from the outside diameter of the shell to the nozzle-flange face unless otherwise specified. Nozzles up to and including 4 in. shall be gusseted per Fig. 4-11.

Other gasket materials or flange dimensions than those given in Fig. 4-6 are permissible provided that:

*(a)* The neck thickness requirements of Fig. 4-6 are met.

*(b)* The flange satisfies the requirements of Appendix NM-2, Appendix NM-12, or Subpart 3B.

*(c)* If the nozzle will be subjected to pressures greater than 50 psig, in addition to (b) above, the nozzle neck thickness shall be the greater of the thickness in Fig. 4-6 or that resulting from design by Subpart 3B or Appendix NM-12.

### 4-420 Bolt Holes

All bolt holes shall be back spot-faced for washers in accordance with Fig. 4-6. Bolt holes and spot facing shall be resin coated. Overall machine facing of the back of flanges in lieu of spot facing is permitted, provided the hub is not undercut.

### 4-430 Installation of Nozzles

The laminates used to install a nozzle or manway shall be made by the hand lay-up method using Type I or II laminates in accordance with Figs. 4-8 through 4-10.

*(a)* If the vessel section is of filament wound construction, the reinforcement laminate shall be of a Type II construction.

*(b)* If the vessel section is of filament wound construction, the attachment laminate shall be of a Type II construction for nozzles 6 in. and above in size. For nozzles below 6 in. in size that are gusseted in accordance with Fig. 4-11, the attachment laminate may be of Type I or Type II construction for any type of vessel section laminate where the nozzle is located.

*(c)* Where plate gussets are installed in accordance with Fig. 4-11, all nozzle reinforcement and attachment laminates shall be installed before the installation of the gussets.

## 4-500 MANWAYS

### 4-510 Diameter

Manways shall have a minimum diameter of 20 in. Manway dimensional requirements are as shown in Table 4-2.

### 4-520 Installation

The installation of a manway shall comply with the requirements given for nozzles.

### 4-530 Bolt Holes (b)

All manway flange bolt holes shall be back spot-faced for ASME B18.22.1 Type A Narrow washers. Bolt holes and spot facing shall be resin coated. Overall



Copyright ASME International
Provided by IHS under license with ASME
No reproduction or networking permitted without license from IHS

Not for Resale

machining of the back of manway flanges in lieu of spot facing is permitted, provided the hub is not undercut.

## 4-600 REINFORCEMENT OF CUTOUTS

When reinforcing materials are cut to facilitate placement around an installed nozzle, joints in successive reinforcing layers shall be staggered to avoid overlapping and, on cylindrical shells, shall not be placed so that the joints are parallel to the axis of the cylinder.

## 4-700 TOLERANCES

Required fabrication tolerances are given in Figs. 4-1; 4-5; and 4-12, sketches (a), (b), and (c). Flange face drawback and/or waviness shall not exceed the values listed in Table 4-3 as measured at or inside the bolt circle. Reverse drawback shall be limited to $^{1}/_{64}$ in., measured at the inside of the flange using the outside of the flange as a reference point.

## 4-800 BALSA WOOD CORED PLATES (b)

Balsa wood cored plates shall be limited to flat panel designs fabricated using Type I, Type II, or Type X laminate with balsa wood that meets the requirements of Appendix M-13. The following applies to fabrication with balsa wood cored plates.

*(a)* Minimum laminate thickness per side of balsa wood core laminate shall be 0.22 in.

*(b)* At least one layer of $1^{1}/_{2}$ oz/sq ft chopped strand mat shall be placed on each side, between the balsa wood core and the structural laminate, to ensure proper bond.

*(c)* Balsa wood core laminates shall use only end-grain core.

*(d)* Core thicknesses greater than 2 in. shall be layered in up to 2 in. increments with at least one layer of $1^{1}/_{2}$ oz/sq ft chopped strand mat between balsa wood layers to ensure proper bond between layers, with the following exception: For a tapered sloped bottom which is greater than 2 in. thick, a single machined layer of full-thickness balsa may be used.

*(e)* A typical flat cored bottom knuckle detail is shown in Fig. 4-13.

*(f)* A design method for flat cored plates subject to internal or external pressure is given in Appendix NM-15.



Copyright ASME International
Provided by IHS under license with ASME
No reproduction or networking permitted without license from IHS

Not for Resale

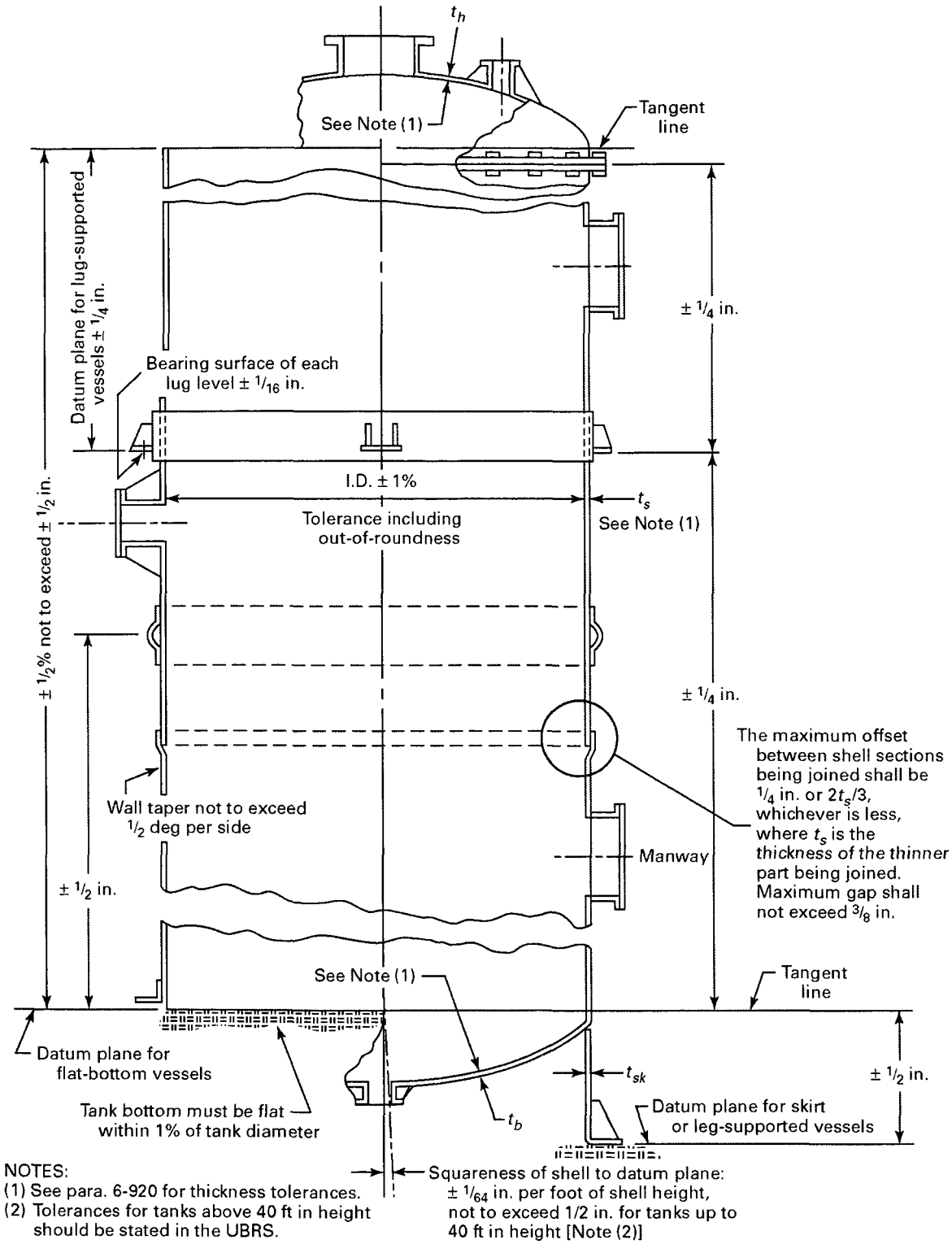


**FIG. 4-1 FABRICATION TOLERANCES**



Copyright ASME International
Provided by IHS under license with ASME
No reproduction or networking permitted without license from IHS
Not for Resale

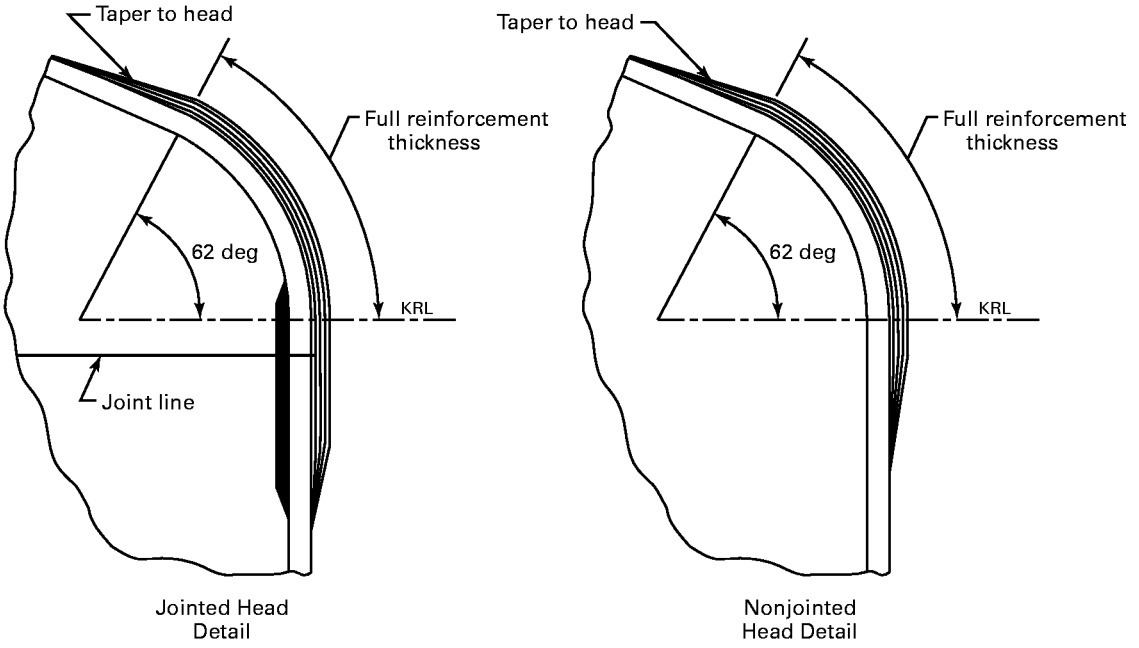


**(a) Torispherical Head Subject to Internal Loading**

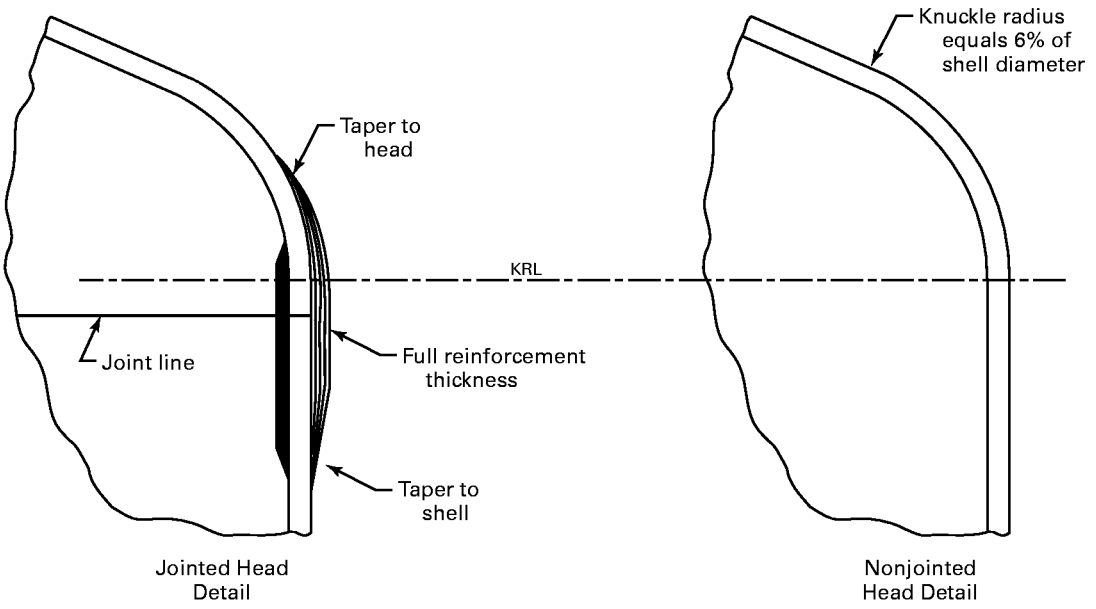


**(b) Torispherical Head Not Subject to Internal Loading**

**FIG. 4-2 TORISPHERICAL HEADS**



Copyright ASME International
Provided by IHS under license with ASME
No reproduction or networking permitted without license from IHS
Not for Resale

Copyright ASME International
Provided by IHS under license with ASME
No reproduction or networking permitted without license from IHS



| Vessel Diameter, ft | *R*, min., in. | *L*, min., in. | *M*, min., in. |
|---|---|---|---|
| 4 ft and under | 1 | 8 | 3 |
| Over 4 ft | $1\frac{1}{2}$ | 12 | 4 |

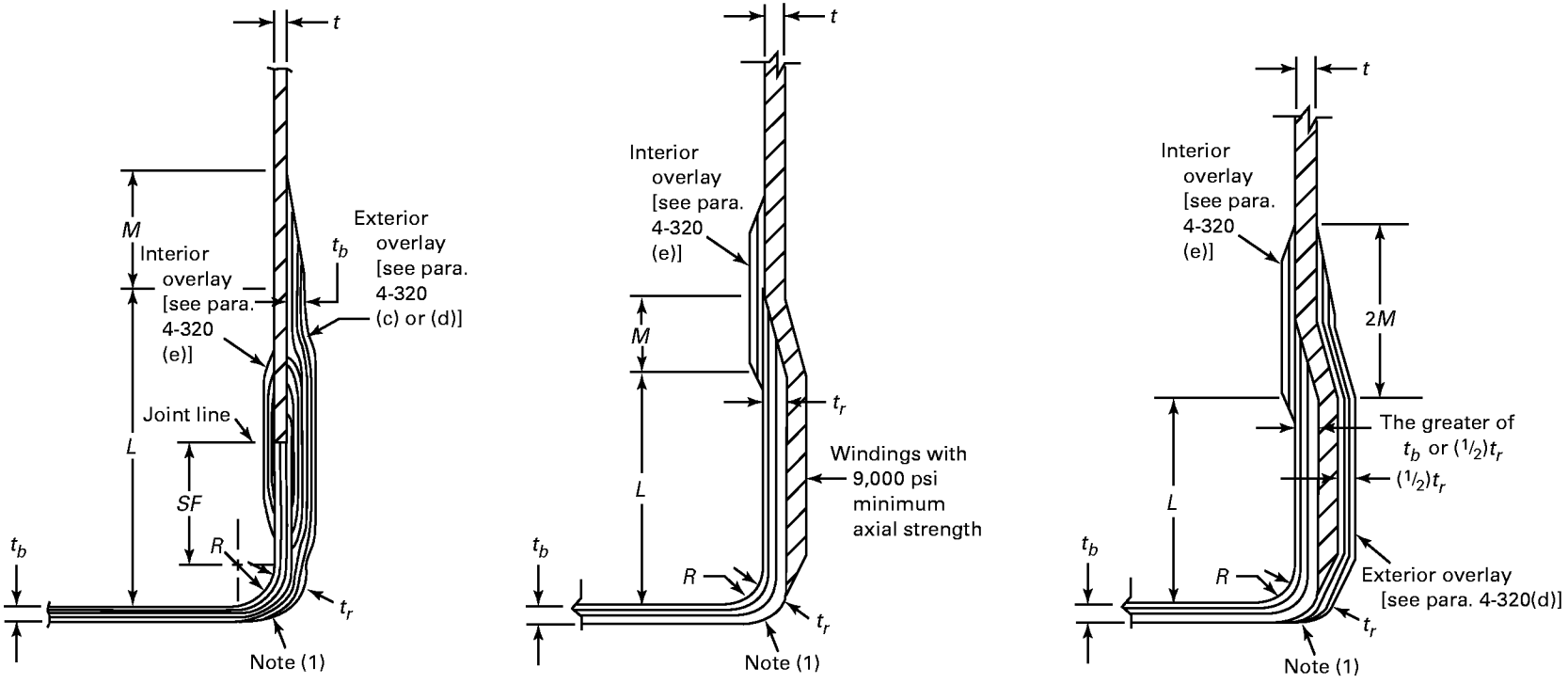


(a) Joined Head to Filament-Wound Shell

(b-1) Integral Head to Filament-Wound Shell

(b-2) Integral Head to Filament-Wound Shell

(a)

**FIG. 4-3 FLAT-BOTTOM TANK CORNER DETAIL**





Not for Resale

Copyright ASME International
Provided by IHS under license with ASME
No reproduction or networking permitted without license from IHS



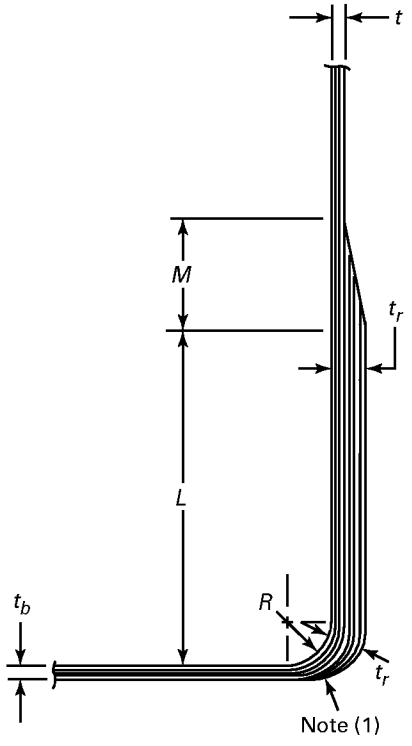


**(c) Integral Head to Hand Lay-Up Shell**

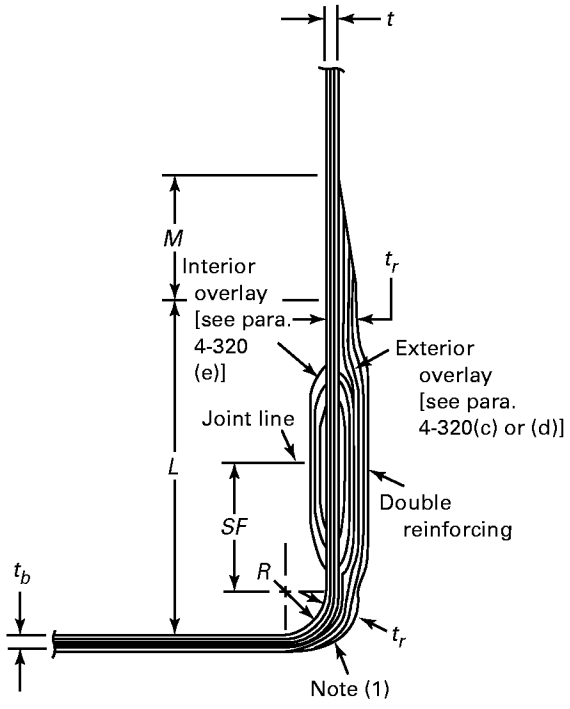


**(d) Joined Head to Hand Lay-Up Shell**

$L$ = length of double reinforcement
$M$ = length of thickness transition (taper)
$t$ = shell thickness
$t_b$ = bottom thickness

$t_r$ (min.) = $t + t_b$
$R$ = inside corner radius
$SF$ = straight flange of bottom head

NOTE:
(1) Projections beyond flat plane shall not exceed $^1/_4$ in.

**FIG. 4-3 FLAT-BOTTOM TANK CORNER DETAIL (CONT'D)**





Not for Resale

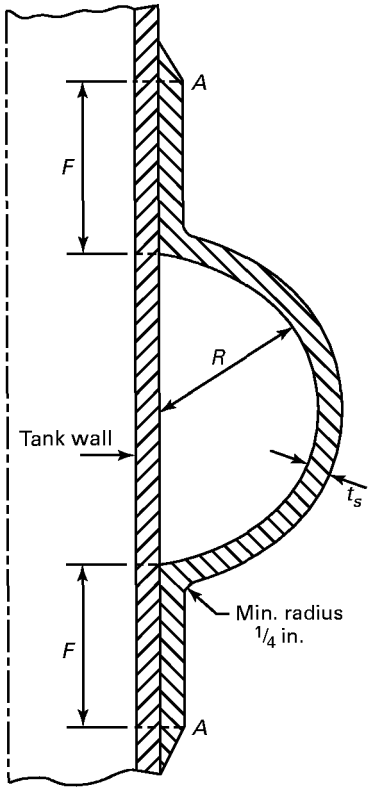


Dimensions and Moment of Inertia of Half-Round Stiffener Rings

| Nominal Size and Radius $R$, in. | Stiffener Thickness $t_s$, in. | Tank Wall Thickness, in. / Moment of Inertia, in.$^4$ | | | |
|---|---|---|---|---|---|
| 2 | 1/4 | 1/4 — 2 | 5/16 — 2 | 3/8 — 2 1/2 | |
| 2 | 5/16 | 1/4 — 2 | 5/16 — 2 1/2 | 3/8 — 3 | |
| 3 | 5/16 | 1/4 — 7 | 5/16 — 7 1/2 | 3/8 — 8 | 7/16 — 9 |
| 3 | 3/8 | 1/4 — 8 | 5/16 — 9 | 3/8 — 9 1/2 | 7/16 — 10 |
| 4 | 3/8 | 3/8 — 22 | 7/16 — 23 | 1/2 — 25 | 3/4 — 30 |
| 4 | 7/16 | 3/8 — 23 | 1/2 — 26 | 5/8 — 31 | 3/4 — 34 |
| 4 | 1/2 | 3/8 — 27 | 1/2 — 30 | 5/8 — 34 | 3/4 — 37 |
| 5 | 3/8 | 1/2 — 45 | 5/8 — 50 | 3/4 — 54 | |
| 5 | 1/2 | 1/2 — 57 | 5/8 — 61 | 3/4 — 67 | |
| 5 | 5/8 | 1/2 — 67 | 5/8 — 72 | 3/4 — 78 | |
| 6 | 3/8 | 1/2 — 77 | 5/8 — 84 | 3/4 — 91 | 1 — 104 |
| 6 | 1/2 | 1/2 — 97 | 5/8 — 103 | 3/4 — 112 | 1 — 128 |
| 6 | 5/8 | 1/2 — 115 | 5/8 — 123 | 3/4 — 131 | 1 — 150 |

GENERAL NOTES:
(a) $F = R$.
(b) At locations $A$, taper reinforcing element into shell. Taper no steeper than 1:6.
(c) $t_s$ = stiffener thickness (in.), to consist of alternate plies of mat and woven roving with a final ply of mat.
(d) Alternate stiffener shapes (triangular, trapezoidal, etc.) may be used, as long as an equivalent moment of inertia is provided.

**FIG. 4-4 STIFFENER DETAIL**



Copyright ASME International
Provided by IHS under license with ASME
No reproduction or networking permitted without license from IHS
Not for Resale

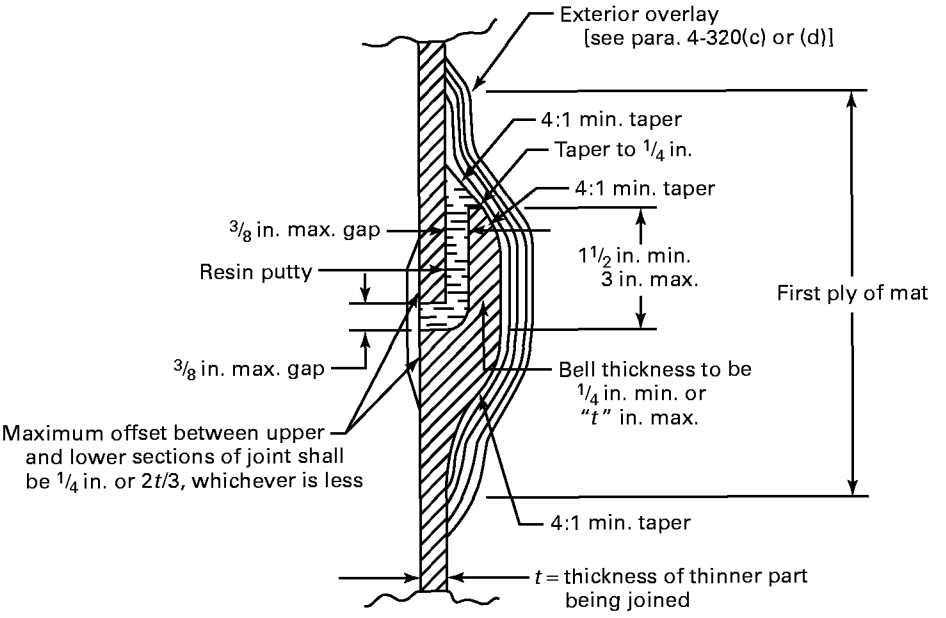


**(a) Tolerances for Bell and Spigot Joints**

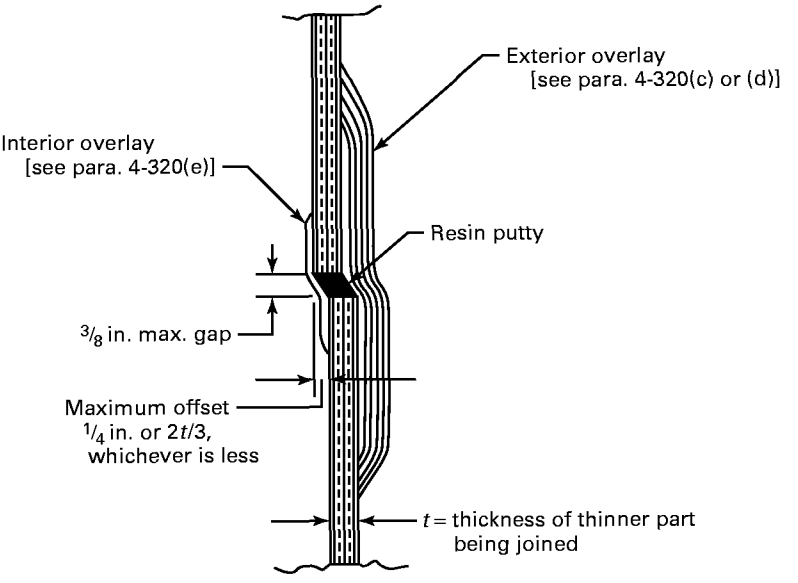


**(b) Tolerances for Butt Joints**

GENERAL NOTE: The use of putty should be kept to a minimum and used only to fill gaps and offsets, and not be used to fill depressions on the shell. Use of putty may create excessive noise during acoustic emission testing. Interior structural overlays for shell to shell and head to shell joints are not allowed. Taper of the structural portion may be desired to minimize structural discontinuities, such as the case of high axial loading applications.

## FIG. 4-5 JOINT ARRANGEMENT



Copyright ASME International
Provided by IHS under license with ASME
No reproduction or networking permitted without license from IHS
Not for Resale

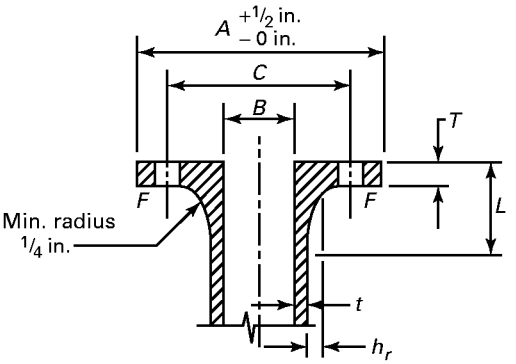


Dimensions generally comparable to Class 150 welding-neck flanges.

Flange face flatness per Table 4-3. At *F*, spot face for washers. See below.

| Size *B*, in. | *A*, in. | *C*, in. [Notes (1)–(3)] | Min. *T* Type I Laminates, in. | Min. *T* Type II Laminates, in. | Min. Hub Reinforcement $h_r$, in. | Min. *t*, in. | Min. *L*, in. | No. of Bolts | Bolt Hole Diameter, in. | Bolt Diameter, in. | ANSI B18.22.1 Type A Narrow Washer Size (O.D.), in. | Bolt Torque, ft-lb |
|---|---|---|---|---|---|---|---|---|---|---|---|---|
| 2 | 6 | 4 3/4 | 0.625 | 0.563 | 0.25 | 0.25 | 2 5/8 | 4 | 3/4 | 5/8 | 1 5/16 | 25 |
| 3 | 7 1/2 | 6 | 0.625 | 0.563 | 0.283 | 0.25 | 2 7/8 | 4 | 3/4 | 5/8 | 1 5/16 | 25 |
| 4 | 9 | 7 1/2 | 0.813 | 0.688 | 0.313 | 0.25 | 3 1/4 | 8 | 3/4 | 5/8 | 1 5/16 | 25 |
| 6 | 11 | 9 1/2 | 0.938 | 0.688 | 0.313 | 0.25 | 3 13/16 | 8 | 7/8 | 3/4 | 1 1/2 | 25 |
| 8 | 13 1/2 | 11 3/4 | 1.125 | 0.813 | 0.375 | 0.25 | 4 3/8 | 8 | 7/8 | 3/4 | 1 1/2 | 25 |
| 10 | 16 | 14 1/4 | 1.25 | 0.938 | 0.5 | 0.25 | 4 3/8 | 12 | 1 | 7/8 | 1 3/4 | 25 |
| 12 | 19 | 17 | 1.438 | 1.063 | 0.625 | 0.25 | 4 15/16 | 12 | 1 | 7/8 | 1 3/4 | 25 |
| 14 | 21 | 18 3/4 | 1.438 | 1.063 | 0.688 | 0.313 | 5 | 12 | 1 1/8 | 1 | 2 | 30 |
| 16 | 23 1/2 | 21 1/4 | 1.563 | 1.188 | 0.813 | 0.313 | 5 1/16 | 16 | 1 1/8 | 1 | 2 | 30 |
| 18 | 25 | 22 3/4 | 1.625 | 1.25 | 0.75 | 0.375 | 5 1/2 | 16 | 1 1/4 | 1 1/8 | 2 1/4 | 35 |
| 20 | 27 1/2 | 25 | 1.813 | 1.313 | 0.75 | 0.375 | 5 3/8 | 20 | 1 1/4 | 1 1/8 | 2 1/4 | 35 |
| 24 | 32 | 29 1/2 | 2.125 | 1.5 | 0.813 | 0.438 | 5 3/8 | 20 | 1 3/8 | 1 1/4 | 2 3/8 | 40 |

GENERAL NOTES:
(a) Gaskets shall be 1/8 in. thick full-face elastomeric material having a hardness of Shore A60 ±5.
(b) Flange thicknesses are based on 1800 psi design stress for Type I laminates and a 3000 psi design stress for Type II laminates. A design factor of 5:1 was used against ultimate tensile stress in both types of laminate construction.
(c) The nozzle neck thicknesses given are based on a Type II or equivalent strength filament wound Type X laminate with a design factor of 10:1 against ultimate tensile strength and are the minimum thicknesses which may be used in all types of laminate construction. If Type I hand lay-up laminates are utilized, the nozzle neck thicknesses must be increased for nozzle sizes 10 in. and up.
(d) The rating of all nozzle necks and flanges for all sizes given in this Table is 50 psi.

NOTES:
(1) ±0.06 in. (see ASME B16.5).
(2) ±0.03 in. center to center of adjacent bolt holes (see ASME B16.5).
(3) Eccentricity between bolt holes and center of nozzle: for size 2 in., ±0.03 in.; for size 3 in. and larger, ±0.06 in.

## FIG. 4-6 NOZZLE FLANGE DIMENSIONS FOR CLASS 150 BOLTING



Copyright ASME International
Provided by IHS under license with ASME
No reproduction or networking permitted without license from IHS
Not for Resale

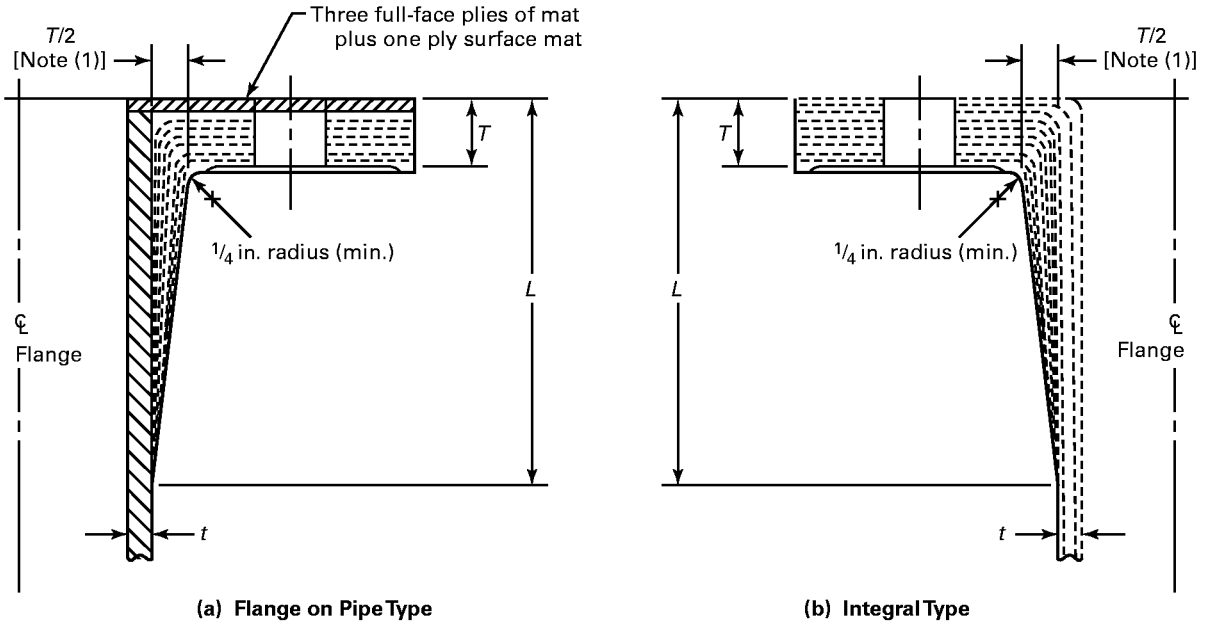


NOTE:
(1) *T*/2 equals hub reinforcement.

**FIG. 4-7 FLANGED NOZZLE LAY-UP METHOD**



Copyright ASME International
Provided by IHS under license with ASME
No reproduction or networking permitted without license from IHS
Not for Resale

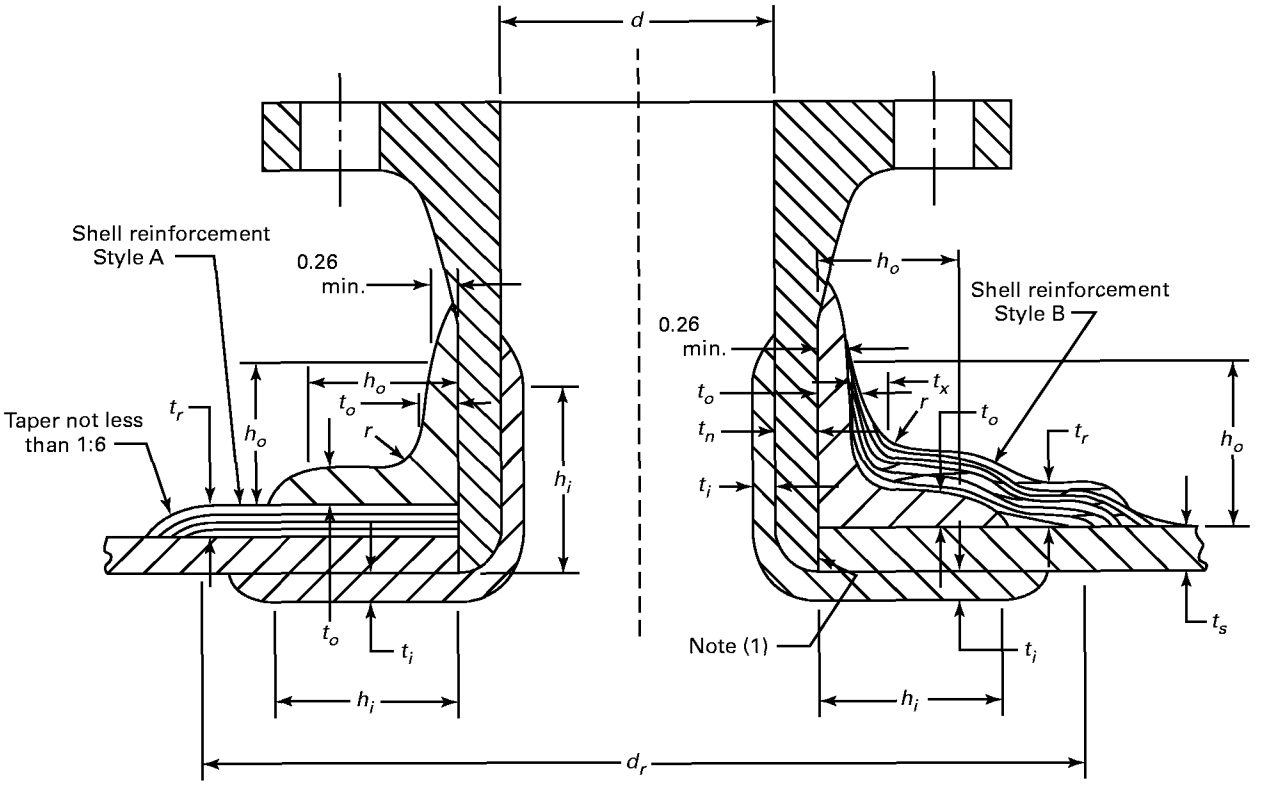


$d$ = nozzle diameter
$d_r$ = cutout reinforcement diameter, in., measured on the vessel surface (greater of $2d$ or $d + 6$; see para. 3A-720)
$h_i$ = inside shear bond length (see Table 4-1)
$h_o$ = outside shear bond length (see Table 4-1)
$h_s$ = total shear bond length (see Table 4-1)
$= h_i + h_o$
$r$ = fillet radius ($^3/_8$ in. min.)
$t_i$ = inside installation laminate thickness
$= t_w - t_o$ [minimum $t_i = 0.14$ in. (3*M, V*)]
$t_n$ = minimum nozzle stub thickness (see Fig. 4-6 and Table 4-2)
$t_o$ = outside installation laminate thickness
$= t_w - t_i$ [minimum $t_o = 0.26$ in. (6*M*)]
$t_r$ = cutout reinforcement laminate thickness (see para. 3A-730)
$t_s$ = shell thickness
$t_w$ = total installation laminate thickness (minimum $t_w = 0.40$ in.)
= greater of $t_r$ or $2t_n$ for Style A
= lesser of $t_r$ or $2t_n$ for Style B
$t_x$ = reinforcement base thickness
$= t_r/2$ (Style B reinforcement)

GENERAL NOTE: The installation laminate and the reinforcement can be applied as a single unit.

NOTE:
(1) Nozzle wall may also butt up against the shell or head exterior surface.

**FIG. 4-8 FLUSH NOZZLE INSTALLATION**



Copyright ASME International
Provided by IHS under license with ASME
No reproduction or networking permitted without license from IHS
Not for Resale

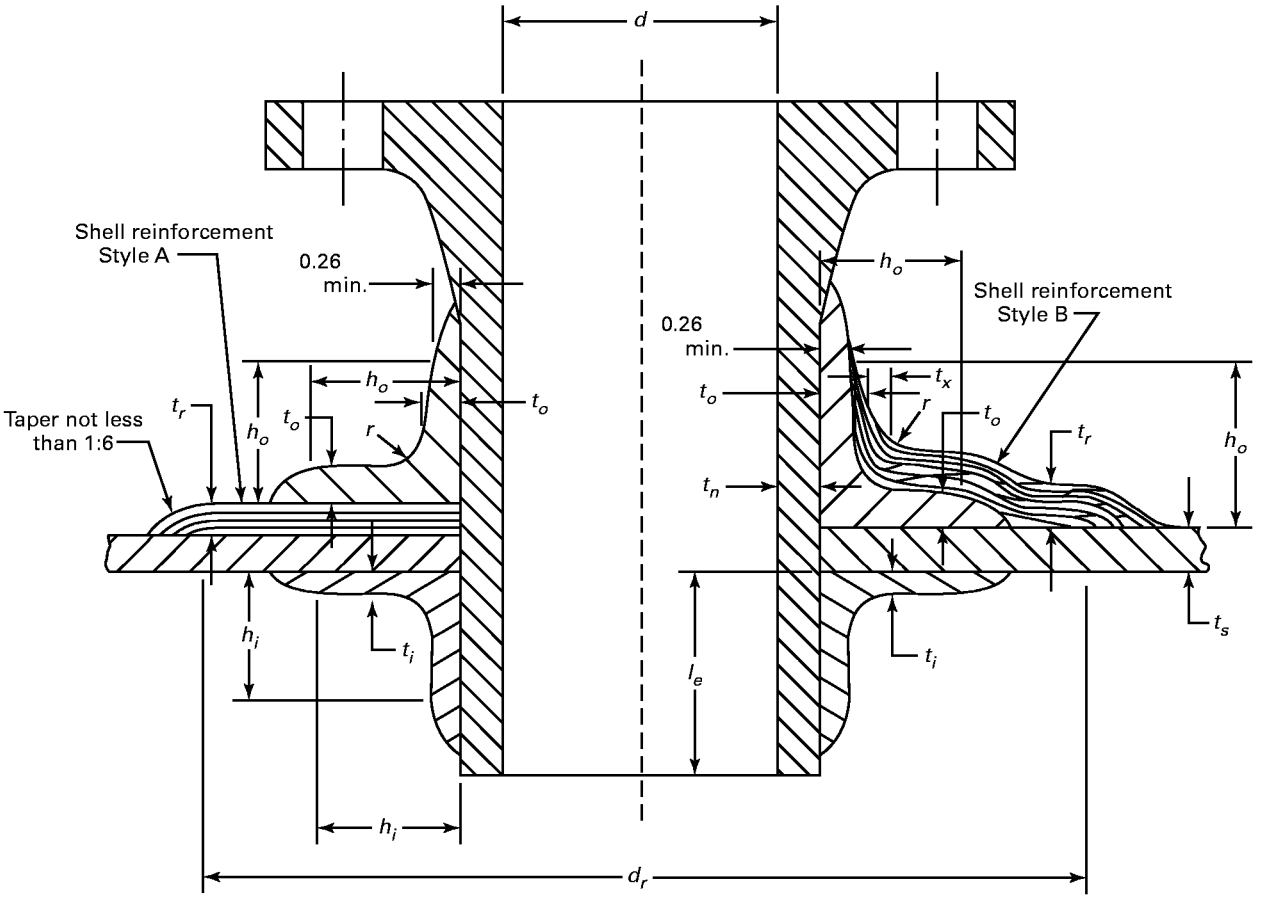


$d$ = nozzle diameter
$d_r$ = cutout reinforcement diameter, in., measured on the vessel surface (greater of $2d$ or $d + 6$; see para. 3A-720)
$h_i$ = inside shear bond length (see Table 4-1)
$h_o$ = outside shear bond length (see Table 4-1)
$h_s$ = total shear bond length (see Table 4-1)
= $h_i + h_o$
$l_e$ = penetration length (2 in. min.)
$r$ = fillet radius ($^3/_8$ in. min.)
$t_i$ = inside installation laminate thickness
= $t_w - t_o$ [minimum $t_i = 0.14$ in. ($3M$, $V$)]
$t_n$ = minimum nozzle stub thickness (see Fig. 4-6 and Table 4-2)
$t_o$ = outside installation laminate thickness
= $t_w - t_i$ [minimum $t_o = 0.26$ in. ($6M$)]
$t_r$ = cutout reinforcement laminate thickness (see para. 3A-730)
$t_s$ = shell thickness
$t_w$ = total installation laminate thickness (minimum $t_w = 0.40$ in.)
= greater of $t_r$ or $2t_n$ for Style A
= lesser of $t_r$ or $2t_n$ for Style B
$t_x$ = reinforcement base thickness
= $t_r/2$ (Style B reinforcement)

GENERAL NOTE: The installation laminate and the reinforcement can be applied as a single unit.

**FIG. 4-9 PENETRATING NOZZLE INSTALLATION**



Copyright ASME International
Provided by IHS under license with ASME
No reproduction or networking permitted without license from IHS Not for Resale

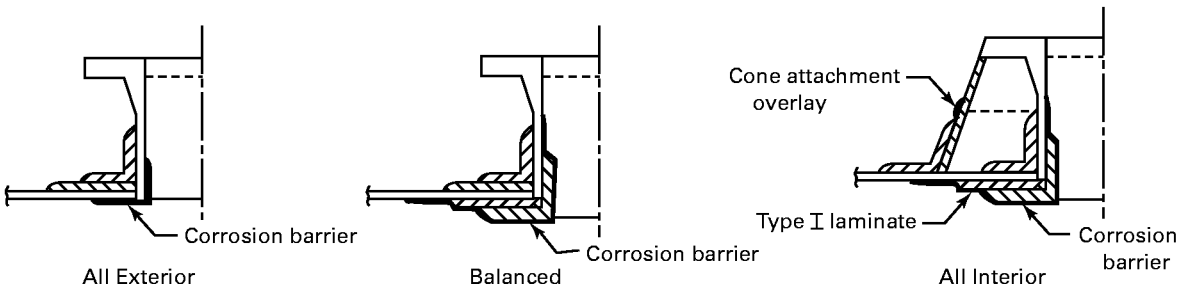


**Flush Type Nozzle**

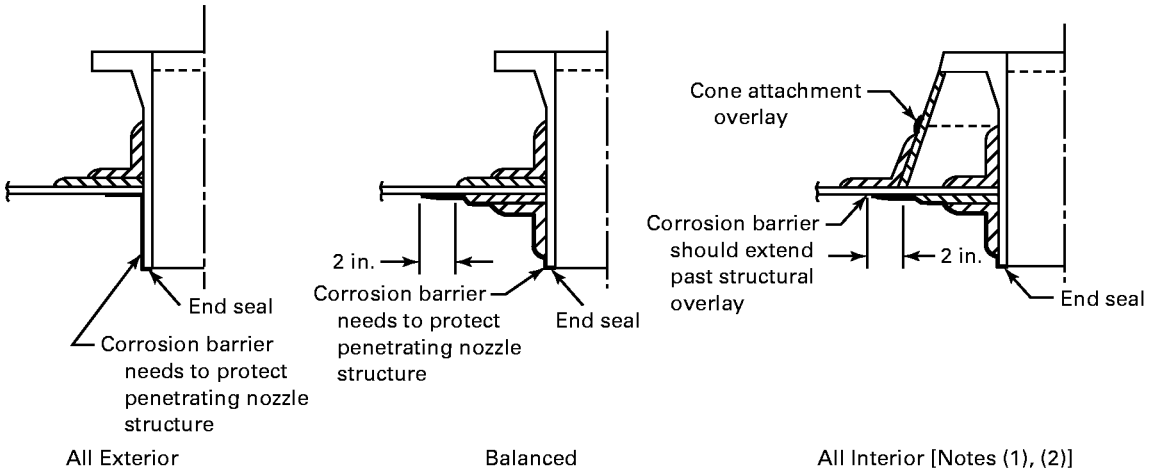


**Penetrating Type Nozzle**

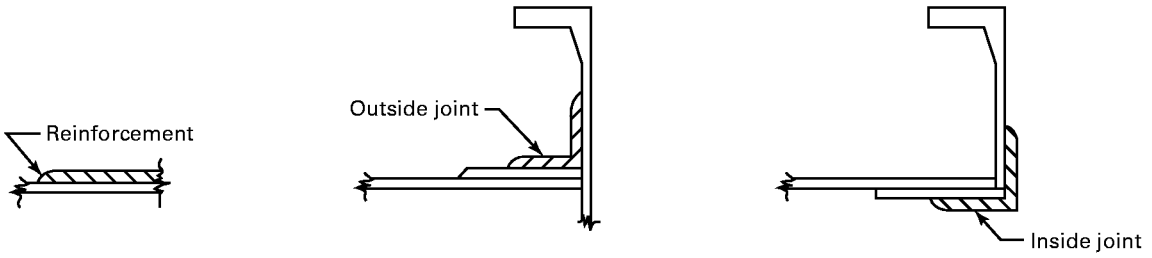


**Reinforcements**

NOTES:
(1) The reinforcement(s) and joint(s) can be done in one operation.
(2) In highly corrosive environments, interior structural overlays are not recommended.

## FIG. 4-10 NOZZLE INSTALLATION AND CUTOUT REINFORCEMENT LOCATION ALTERNATE



Copyright ASME International
Provided by IHS under license with ASME
No reproduction or networking permitted without license from IHS
Not for Resale

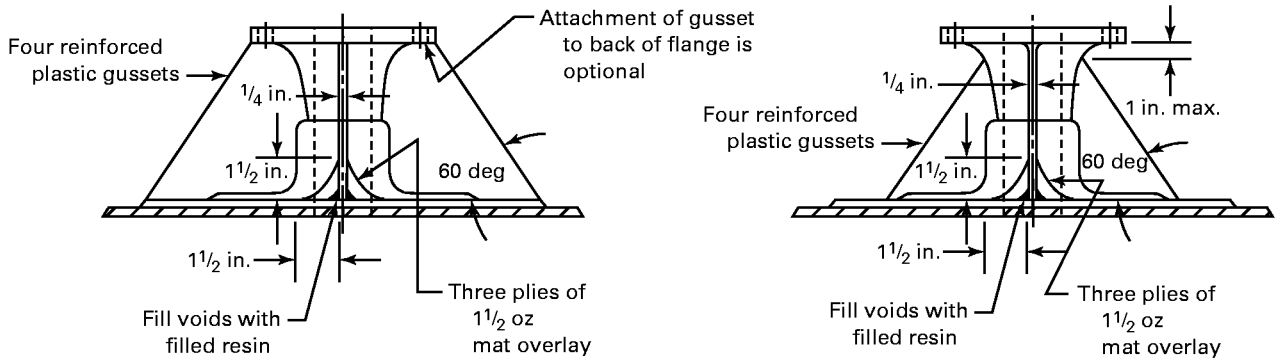


**(a) Plate Type Gussets [Note (1)]**

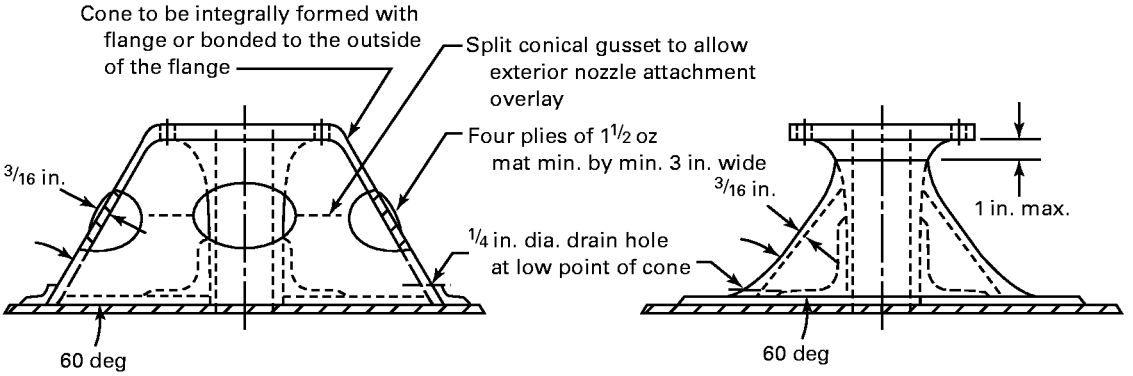


**(b) Typical Cone Type Gussets [Note (2)]**

NOTES:
(1) Gussets are to be evenly spaced around nozzle. Gussets are to be added after complete assembly of nozzle on shell. Gussets are not normally required on nozzles over 4 in.
(2) Conical gusset attachment to the shell or head must be made after the installation of the external structural nozzle attachment overlay.

## FIG. 4-11 NOZZLE GUSSETS



Copyright ASME International
Provided by IHS under license with ASME
No reproduction or networking permitted without license from IHS Not for Resale

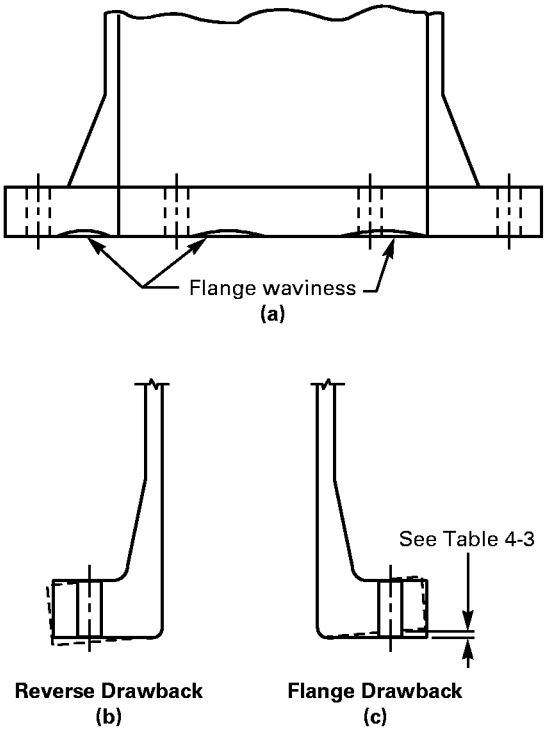


**FIG. 4-12 FLANGE TOLERANCES**

**TABLE 4-1 SHEAR BOND LENGTH**

| Minimum Nominal Overlay Thickness, in. | Minimum Shear Length $h_s$, in. [Note (1)] |
|---|---|
| 1/4 | 3 |
| 5/16 | 3 |
| 3/8 | 3 |
| 7/16 | 3 1/2 |
| 1/2 | 4 |
| 9/16 | 4 1/2 |
| 5/8 | 5 |
| 11/16 | 5 1/2 |
| 3/4 | 6 |
| 7/8 | 7 |
| 1 | 8 |

GENERAL NOTE: When internal overlay serves only as a corrosion barrier, the total shear length must be placed on the exterior overlay.

NOTE:
(1) $h_s$ is total shear length ($h_o + h_i$). See Figs. 4-8 and 4-9.



Copyright ASME International
Provided by IHS under license with ASME
No reproduction or networking permitted without license from IHS
Not for Resale

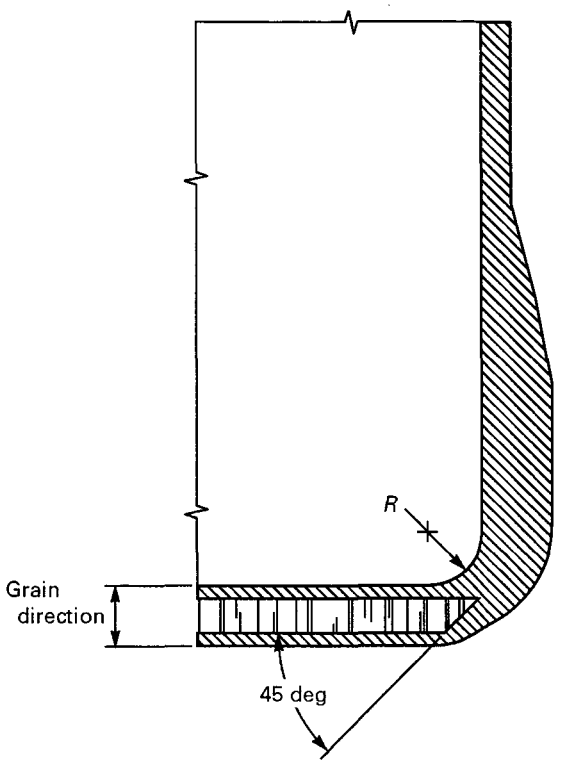


GENERAL NOTE: Refer to Fig. 4-3 for flat-bottom tank corner detail.

**FIG. 4-13 FLAT CORED BOTTOM KNUCKLE DETAIL** **(b)**



Copyright ASME International
Provided by IHS under license with ASME
No reproduction or networking permitted without license from IHS

Not for Resale

## TABLE 4-2 TYPICAL DIMENSIONS OF MANWAYS

| Minimum Size, in. | Minimum Diameter of Flange and Cover, in. | Minimum Thickness of Flange and Cover, in. | Min. Manway Wall Thickness, in. | Diameter of Bolt Circle, in. [Notes (1)–(3)] | Number of Bolts | Bolt Hole Diameter, in. |
|---|---|---|---|---|---|---|
| **Pressurized manway — up to 15 psig** | | | | | | |
| 20 | 27 1/2 | 1 | 3/8 | 25 | 20 | 3/4 |
| 22 | 30 | 1 | 3/8 | 27 | 20 | 3/4 |
| 24 | 32 | 1 1/4 | 3/8 | 29 1/2 | 20 | 3/4 |
| **Manway — atmospheric pressure, up to 0.5 psig** | | | | | | |
| 20 | 27 1/2 | 3/8 | 1/4 | 25 | 20 | 1/2 |
| 22 | 30 | 3/8 | 1/4 | 27 | 20 | 1/2 |
| 24 | 32 | 3/8 | 1/4 | 29 1/2 | 20 | 1/2 |

GENERAL NOTES:
(a) Bolt size equals bolt hole diameter minus 1/8 in. (3 mm).
(b) Gaskets shall be 1/8 in. thick full-face elastomeric material having a hardness of Shore A60 ±5.

NOTES:
(1) ±0.06 in. (ASME B16.5).
(2) ±0.03 in. center to center of adjacent bolt holes (ASME B16.5).
(3) ±0.06 in. eccentricity between bolt circle and center of nozzle.

## TABLE 4-3 FLANGE FLATNESS TOLERANCE

| Flange Size, in. | Tolerance, in. |
|---|---|
| 2–84 | +1/32 |
| 90–108 | +1/16 |
| 114–144 | +3/32 |



Copyright ASME International
Provided by IHS under license with ASME
No reproduction or networking permitted without license from IHS Not for Resale

# PART 5
# OVERPRESSURE PROTECTION

## 5-100 BASIS FOR DESIGN

### 5-110 Excessive Pressure

In view of the relatively low mechanical properties of RTP compared with metals, *careful* consideration must be given to excessive internal or external pressure.

### 5-120 Operating Characteristics

Operating conditions must reflect both normal and abnormal operations relating to internal or external pressure, venting, vessel overflow location, and process upsets.

## 5-200 PROTECTION AGAINST OVERPRESSURE

All vessels within the scope of this Standard shall be provided with protection against internal and/or external pressure exceeding design conditions. This shall be the responsibility of the User.

The size and location of all nozzles used for overpressure protection, set forth in para. 5-300, shall be shown in the UBRS, item 15.00 (nozzle schedule).

## 5-300 TYPE OF OVERPRESSURE PROTECTION

Protection against overpressure shall be accomplished by one or a combination of the following devices:

*(a)* direct spring-loaded safety or safety relief valves
*(b)* rupture disks
*(c)* deadweight loaded pallet-type vent valves
*(d)* free vents
*(e)* overflows

## 5-400 LOCATION OF OVERPRESSURE PROTECTION DEVICES

Devices listed in paras. 5-300(a) through (d) shall be located in the top of the vessel above the maximum liquid level.

Overflows for vertical vessels shall be on or below the top head tangent line. Overflows for horizontal vessels shall be located in the head or shell below the top of the shell.

The User shall not use free vents as liquid overflows.

## 5-500 INSTALLATION PRACTICES

Unsecured (not locked or sealed open) block valves shall not be installed between the vessel and any relieving device.

## 5-600 OVERPRESSURE DEVICE SET PRESSURE

Relief devices shall be set no higher than the design pressure corrected for hydrostatic head.

## 5-700 RELIEF DEVICE SIZING

### 5-710 Sizing of Spring or Deadweight Loaded Valves and Rupture Disks

Devices listed in paras. 5-300(a), (b), and (c) shall be sized in accordance with the device manufacturer's catalog so that at its full flow capacity the relief pressure shall not exceed 110% of the vessel design pressure.



Copyright ASME International
Provided by IHS under license with ASME
No reproduction or networking permitted without license from IHS

Not for Resale

### 5-720 Sizing of Vents and Overflows

Vents and overflows that discharge freely into the atmosphere shall be sized sufficiently to handle the flow displacement of all combined inlet and outlet nozzles without creating any pressure above the vessel's internal design pressure or any pressure below the vessel's external design pressure.

### 5-800 DISCHARGE LINES FROM PRESSURE RELIEF DEVICES

Discharge lines from pressure relief devices shall be designed to facilitate drainage or shall be fitted with an open drain to prevent lodging in the discharge side of the safety device. Discharge lines shall lead to a safe place of discharge. The size of the discharge lines shall be such that any pressure that may exist or develop will not reduce the relieving capacity of the relieving device below that required to protect the vessel properly.

### 5-900 RESPONSIBILITY FOR DESIGN AND SELECTION

The design and/or selection of pressure relief devices, the sizing of mounting nozzle, and the size, length, and routing of discharge piping shall be the responsibility of the User and not that of the Fabricator or the Inspector.



Copyright ASME International
Provided by IHS under license with ASME
No reproduction or networking permitted without license from IHS
Not for Resale

# PART 6
# INSPECTION AND TESTS

## 6-100 SCOPE

This Part covers inspection and testing of RTP corrosion resistant vessels. It is intended to ensure that a vessel has been designed and fabricated in accordance with the requirements of the latest revision of the design, the approved drawings, and this Standard.

This Part does not cover specifications, instructions, and inspections referred to in the purchase contract or User's Basic Requirements Specification (UBRS), which may be more restrictive than the requirements of this Standard and which may require additional verification by the User's inspector. Appendix NM-7 covers User's inspection.

## 6-200 INSPECTOR

See para. 1-400.

## 6-300 INSPECTION AND RESPONSIBILITY

*(a)* The Fabricator of a vessel has the responsibility to comply with all the requirements of this Standard, the design, and the UBRS. The Fabricator is additionally responsible for assuring that any RTP subassemblies or components fabricated by a Subcontractor that will become a portion of the vessel and are part of the scope of RTP-1 (see paras. 1-110 and 1-120) shall be fabricated by an ASME RTP-1 accredited shop and are to be in full compliance with all the requirements of RTP-1. Partial Data Reports shall accompany any such subassembly or component and shall be signed by the Subcontractor's Certified Individual.

*(b)* Any subcontracted or outsourced subassembly or component to be furnished with a vessel by a Fabricator that will become a portion of the vessel, or a load-bearing accessory that will be attached to the vessel (i.e., a support), must also be inspected by the Fabricator's inspector. Procedures and general requirements for acceptance or rejection shall be part of the Fabricator's Quality Control Program.

*(c)* The Fabricator shall have a written Quality Control Manual, to include defined procedures and forms so as to control the process of fabrication. The Fabricator's Quality Control Program shall be supervised by the Fabricator and shall be in effective operation throughout the process of fabrication. See Appendix M-4.

*(d)* A copy of the Fabricator's Quality Control Manual shall be made available to the Inspector on request. The Fabricator's Quality Control Manual may contain proprietary information and procedures. No copies of the Fabricator's Quality Control Manual shall be removed from the Fabricator's premises without the Fabricator's permission. This security protection, however, is not to apply to quality control forms and checklists which may be a portion of the Quality Control Manual but are necessary to be used during fabrication to check and control the fabrication process.

*(e)* The Certified Individual's responsibility is to verify that the Fabricator's Quality Control Program is in effective operation via an annual audit as required in para. 1-410(a), and to additionally make such specific inspections and tests as are required by this Standard. The Inspector shall provide a complete report including all data as required in paras. 6-910 through 6-960.

*(f)* Prior to the start of fabrication, the Fabricator shall make available to the Inspector such records pertaining to the vessel as required to permit the Inspector to perform the inspections. These shall include drawings, design calculations, material test results, UBRS, Fabricator's Design Report, and any other reports or records as required. The Fabricator shall provide for Inspector's hold points and verifications of satisfactory completion. Fabrication shall not proceed beyond a hold point until specified inspections have been made.

*(g)* The Fabricator shall make his or her quality control personnel available to the Inspector.

*(h)* The Fabricator shall make available to the Inspector any and all necessary tools and test equipment so the Inspector may conduct all inspections required by this Standard.

*(i)* Final acceptance of the vessel by the Certified Individual shall be obtained by the Fabricator prior to the application of the official ASME RTP-1 Symbol. The Certified Individual shall sign the Inspector's Certification on the Fabricator's Data Report only when the



Copyright ASME International
Provided by IHS under license with ASME
No reproduction or networking permitted without license from IHS
Not for Resale

Certified Individual is satisfied that all requirements of this Standard have been met. See paras. 6-900(d) and (e).

## 6-400 CONDITIONS FOR INSPECTION

*(a)* The Fabricator shall assure that the vessel is clean and free of foreign materials to permit the Inspector to inspect all accessible surfaces.

*(b)* The Fabricator shall position and assure that the vessel is in suitable condition to permit reasonable and safe access for inspection.

*(c)* The Fabricator shall provide reasonable and safe means, such as ladders and/or platforms, to permit the Inspector to safely inspect accessible inner and outer surfaces of the vessel.

## 6-500 EQUIPMENT DESIGN

The Inspector shall examine the Fabricator's design records and reports and verify that the vessel conforms to the latest revision of approved drawings and the UBRS, and that the Fabricator's Design Report has been certified by a registered Professional Engineer.

## 6-600 MATERIALS

The Inspector shall verify that materials used in fabrication of a vessel comply with the requirements of this Standard and the UBRS.

## 6-700 FABRICATION

The Inspector shall establish hold points and make periodic inspections and measurements of the vessel as are required by this Standard to verify that fabrication is in accordance with the requirements of this Standard and the UBRS.

At the completion of each hold point inspection, the Inspector shall report results on forms provided in the Fabricator's Quality Control Program, and highlight any discrepancies requiring corrective action.

## 6-800 FABRICATOR'S QUALITY ASSURANCE PROGRAM

The Inspector shall make such checks as are necessary to verify that the Fabricator's Quality Assurance Program is in effective operation. In addition, the Certified Individual shall perform an annual audit of the Fabricator's Quality Assurance Program.

Any discrepancies shall be promptly brought to the Fabricator's attention for discussion and resolution.

## 6-900 FINAL INSPECTION

*(a)* At the time of final inspection, the Fabricator shall provide to the Inspector the final revision of all of the following documents:

*(1)* design drawings;

*(2)* UBRS;

*(3)* completed and signed copies of all forms from the Fabricator's Quality Control Manual that were used during fabrication to check and verify compliance with this Standard and the design;

*(4)* any copies of Fabricator's Partial Data Reports, with signed Certificates of Compliance, applicable to the finished fabrication (see Table 1-3);

*(5)* copies of all inspection reports made by any inspector/Inspector during the course of fabrication;

*(6)* completed original copy of the Fabricator's Data Report, applicable to the vessel to be inspected, with the Certificate of Compliance signed and dated by the authorized representative of the Fabricator (see Table 1-2);

*(7)* copy of the final revision of the Fabricator's Design Report;

*(8)* the nameplate that is to be applied to the vessel, so that the Inspector may verify that the nameplate meets the requirements of the UBRS and para. 1-540.

*(b)* Design drawings must show design thicknesses and the laminate reinforcing sequence for every section or member. If, during the course of fabrication, it was necessary to add repeatable units to the laminate [see para. 6-920(f)(4)], this change shall be noted and highlighted on the drawings provided to the Inspector.

*(c)* The Fabricator shall also make available to the Inspector all nozzle and manway cutouts, each identified clearly as to its point of origin on the vessel.

*(d)* Upon completion of final inspection, the Inspector shall prepare a brief report summarizing his or her inspection activities and findings, and submit the report to the Fabricator as an attachment to the Certificate of Compliance.

*(e)* When the Inspector has completed the inspections and found the results to be within required tolerances, the Inspector shall present his or her inspection report along with any findings to the Certified Individual. The Certified Individual shall sign and date the Certificate of Compliance prior to returning it to the Fabricator with the inspection report.

*(f)* Paragraphs 6-910 through 6-960 describe the minimum basic tests that must be made, witnessed, or verified by the Inspector prior to or at the time of final inspection.



Copyright ASME International
Provided by IHS under license with ASME
No reproduction or networking permitted without license from IHS
Not for Resale

## 6-910 Resin Cure

*(a)* During the course of fabrication, the Fabricator shall make all such checks necessary to assure that resin additives, promotion, catalyzation, dilution, and curing are controlled and are within the requirements of this Standard. The Fabricator's Quality Control Program shall include procedures and forms, to be used throughout fabrication, to control the ongoing process of resin handling and curing so as to ensure that cure is within required tolerance prior to the final inspection.

*(b)* The Inspector shall verify that the resin has properly cured by testing the internal (process exposed) surfaces of major equipment components and joints such as:

heads
shell sections
head/shell and shell/shell juncture overlays
nozzle and manway necks 18 in. diameter and larger
manway covers and blind flanges

Additionally, the following external surfaces shall be tested to verify proper resin cure:

head/shell and shell/shell juncture overlays
nozzle and manway juncture overlays

Testing shall be as follows:

*(1)* Surface hardness shall be determined in accordance with ASTM D 2583, except D 2583 paras. 6.1, 8.1, 8.2, and 10.1. Allowable surface temperature range shall be 50 to 90°F. Readings shall not be taken on pits, heavy mold release, or other irregularities that may affect the readings. Only dense resin-rich surfaces shall be tested. The Barcol reading will be the average of five impressions taken at various points broadly distributed about the component or joint so as to provide a representative hardness.

*(2)* If low Barcol readings are encountered on wax top-coated surfaces, retest after removing the wax by light sanding or scraping.

*(3)* Barcol test data must verify that the surface hardness of laminates with glass surfacing veil (mat) or carbon surfacing veil (mat) has reached at least 90% of the hardness specified by the resin manufacturer for a clear resin casting.

*(4)* Laminates with organic surfacing veil (mat) may have a Barcol reading lower than 90% of the hardness as specified by the resin manufacturer for a clear resin casting. The minimum acceptable Barcol reading must be established between the User and Fabricator prior to fabrication.

*(5)* Barcol instruments shall be calibrated prior to and during use using the test discs and procedure recommended by the manufacturer of the Barcol instrument.

*(6)* The Inspector shall confirm that minimum Barcol hardness values have been established, the test values are within acceptable limits, and the Barcol instrument has been calibrated.

*(7)* The Inspector shall verify that all potential air-inhibited interior surfaces and overlays, and other surfaces selected at the Inspector's option, shall pass an acetone sensitivity test. For this test, a few drops of acetone are applied to a 1 sq in. to 2 sq in. area, which is rubbed slightly until the acetone has evaporated. Tackiness or softness indicates unacceptable cure of the surface resin. **(00)**

*(c)* Failure to meet the requirements of these tests shall be considered a nonconformance and corrections must be made by the Fabricator in accordance with Appendix M-7.

*(d)* The Inspector shall include results and Barcol data from the above tests in the inspection report.

## 6-920 Dimensions and Laminate Thickness Checks

*(a)* During the course of fabrication, the Fabricator shall make checks to assure that dimensions and laminate thicknesses are within the requirements of this Standard and the design. The Fabricator's Quality Control Program shall include procedures and forms, to be used throughout fabrication, to control the ongoing process of checking all dimensions and laminate thicknesses (to assure that they are within required tolerances) prior to the final inspection.

*(b)* Refer to Fig. 4-1 for mandatory dimensional tolerances. The Inspector shall verify that all these dimensions are within tolerances.

*(c)* Refer to Figs. 4-2 through 4-11 for details and tolerances on overlay, flange, nozzle, and manway designs. The Inspector shall select and check several of these details.

*(d)* Overlays at head-to-shell and shell-to-shell joints and at manways shall be closely inspected and shall conform to the requirements of Part 4.

*(e)* The Inspector shall select and check several laminate thicknesses critical to the safe performance of the equipment. Approved methods of measurement are outlined in para. 2A-400(e).

*(f) Laminate Thickness and Tolerances*

*(1)* The nature of existing practical RTP fabrication methods leads to nonparallel and somewhat irregular surfaces of a laminate. Consequently, a single thickness measurement at one point is not sufficient to characterize



Copyright ASME International
Provided by IHS under license with ASME
No reproduction or networking permitted without license from IHS
Not for Resale

a laminate thickness at that area of a laminate. Additionally, the thickness measurement of one small area of laminate on a part of the equipment (such as a shell or head) is not sufficient to characterize the laminate thickness of that part. For purposes of characterizing the thickness of laminates, this shall be referred to as *laminate thickness variation.*

*(2)* The following procedures shall be used to determine thickness.

*(a) Determining Average Spot Thickness of One Small Area or of a Small Component (Such as a 10 in. Flange).* Lightly mark a continuous circle between 4 in. and 12 in. diameter on the component/area to be thickness checked (on a small component/area that will not accommodate a 4 in. diameter circle, mark the circle as large as the small component/area will allow). Select six points to be measured for thickness so that all points are well distributed (not in a line) over the area of the circle. (A hole may occupy a portion of the area of the circle marked, such as on a flange face or at a point where a nozzle will penetrate a vessel wall.) Avoid selection of a spot to be measured that straddles an overlaid joint.

Average the six readings taken; this is the *average spot thickness* of the small area or small component. Record all six measurements in the inspection report.

*(b) Determining the Average Thickness of a Major Part of a Piece of Equipment [Such as a Head, Shell, Nozzle (or Subassembly), or Manway Wall; Body or Manway Flange].* Four average spot thickness measurements shall be taken, located at the discretion of the Inspector, so as to be broadly distributed over a representative area of the part. The Inspector shall locate one area to be measured at what appears to be the thinnest portion of the part and a second area at what appears to be the thickest portion of the part. Avoid selection of spots falling over joints (overlays).

The other two areas shall be located so as to achieve a representative distribution over the area of the part.

Average the four average spot thicknesses; this is the *average thickness of the major part.* Record all measurement data in the inspection report.

*(c) Special Measurement Practices.* Cylindrical shells designed with tapered walls or stepped thickness walls require treatment as a multiplicity of parts, where each part to be measured shall represent a wall thickness zone as designated in the design.

The measurement of nozzle or manway cutouts, each to represent one average spot thickness, is a convenient means to arrive at the average thickness of a vessel head or shell.

*(3)* Refer to Subpart 2C for permissible tolerances on laminate thickness variation.

*(4)* Variations in thickness may be caused by factors such as resin viscosity, mat or chop density, wetout, fabrication technique, etc. Refer to Appendix M-7, para. M7-640, for requirements and procedures to compensate for these variations.

*(g)* The Inspector shall include results of dimensional and laminate thickness tests in the inspection report.

*(h) Balsa Wood Core Laminates.* Balsa wood core laminates shall be subject to the same average spot thickness rules as outlined in subpara. (f). Average thickness records shall be taken on the interior and exterior laminate in accordance with subpara. (f). **(b)**

## 6-930 Physical Property and Laminate Reinforcing Content Tests

*(a)* The Fabricator is responsible for producing laminates that will meet or exceed permissible mechanical property values as used in the design and as are established as minimum within Subparts 2A and/or 2B. Laminates shall also be in accordance with the reinforcing sequence and minimum reinforcing content as established in Subparts 2A and/or 2B.

*(b)* During the course of fabrication, the Fabricator shall assure that laminate reinforcing and mechanical properties are controlled and are within the requirements of this Standard and the design. The Fabricator's Quality Control Program shall include procedures and forms, to be used throughout fabrication, to control the ongoing process of checking laminate reinforcing and mechanical properties, and to assure that they are within required tolerances prior to the final inspection.

All such ongoing checks and/or tests done to assure quality control, but not including Proof Tests as described in subpara. (d), may be done by either the Fabricator or an independent testing laboratory and require certification only by the individual who conducted or supervised the testing.

*(c)* The Inspector shall visually inspect all nozzle and manway cutouts to verify reinforcing sequence in accordance with the design drawings and shall note the results of his or her inspection on the inspection report. With certain laminate reinforcing designs and some resins, it may not be possible to verify reinforcing sequence through visual inspection. In such cases, the Inspector shall require the Fabricator to conduct sufficient laminate burnout tests, in accordance with ASTM D 2584, using samples taken from the cutouts, to verify reinforcing sequence through count after the burnout test. For each such test made, the reinforcing content



Copyright ASME International
Provided by IHS under license with ASME
No reproduction or networking permitted without license from IHS
Not for Resale

weight percent shall also be determined and recorded in the inspection report.

**(00)** *(d)* Proof Tests are mandatory for all vessels built to this Standard having an internal or external design pressure equal to or exceeding 2 psig. Additionally,



Copyright ASME International
Provided by IHS under license with ASME
No reproduction or networking permitted without license from IHS

Not for Resale

Proof Tests are required on all vessels that are field fabricated and all vessels with an inside diameter equal to or greater than 16 ft.

*(1)* Fabricators shall verify through Proof Tests that all as-constructed laminate mechanical property data, the reinforcing sequence, and reinforcing content weight percent data are in accordance with:

*(a)* the requirements of Subparts 2A and/or 2B;

*(b)* all tensile strength and tensile modulus values employed in the design calculations (Proof Test values must meet or exceed design values);

*(c)* the laminate sequence as specified in the design drawings.

*(2)* Proof Tests may be performed by an independent testing laboratory (contracted by the Fabricator) or by the Fabricator, provided proper test equipment is available. In either case, the test results and procedures are reviewed and certified by a registered Professional Engineer to be accurate and in accordance with the test methods specified herein.

*(3)* For vessel shells constructed of laminates essentially isotropic in the hoop and axial directions (e.g., Type I or Type II laminates), at least one set of mechanical property tests (ASTM D 638) and one reinforcing content weight percent test (ASTM D 2584) shall be carried out using laminate samples taken from nozzle, shell end trim, or manway cutouts. Data obtained from the tests shall be the tensile strength and tensile modulus of elasticity, the reinforcing content weight percent, and the reinforcing sequence.

*(4)* For cylindrical shells constructed of anisotropic laminates (e.g., filament wound laminates), the following mechanical property tests are required: flexural strength and modulus in the hoop and axial directions (corrosion barrier in compression; ASTM D 790), and tensile strength and modulus in the axial direction (ASTM D 638). The reinforcing content weight percent (ASTM D 2584) and the reinforcing sequence shall also be determined.

*(5)* Specimen requirements shall be as follows.

*(a)* Test specimens shall not be machined on the inner or outer surface.

*(b)* Specimens prepared from cylinder cutouts for isotropic laminates as defined above shall be cut in the axial direction of the cylinder to minimize surface curvature.

*(c)* Specimens prepared from flat laminates containing woven roving shall have their long axis parallel to the warp of the woven roving.

*(d)* When the design requires that all or a portion of the corrosion barrier is to be excluded as a contributor to the structural strength of a laminate, then tests of laminates as fabricated would not yield correct data. In such cases, that portion to be excluded as a contributor to structural strength must be removed from test specimens prior to testing. By so doing, tensile strength and tensile modulus test data produced may be compared with the actual structural design values used and the thicknesses of structural portions of laminates that were specified in the design.

This may be conveniently accomplished by placing a piece of release film on (or within) the corrosion barrier during lamination of the shell, at manway cutout location, or on an extended length of shell near the mandrel end.

**CAUTION: Mark the release film location prominently! A failure to completely remove material covering release film could cause delamination during service.**

Test samples shall then be prepared from material taken from the release film location.

*(e)* The Inspector shall include copies of all mechanical property and reinforcing content Proof Test reports in the inspection report. (00)

## 6-940 Laminate Imperfections — Visual Inspection

*(a)* During the course of fabrication, the Fabricator shall make all such checks necessary to assure that laminate imperfections (as defined in Table 6-1) are within the requirements of this Standard and the Visual Inspection Acceptance Level as specified in the UBRS. The Fabricator's Quality Control Program shall include procedures and forms to be used to control the ongoing process of laminate fabrication so as to assure that imperfections are within required tolerances prior to the final inspection.

*(b)* Prior to making a visual examination, the Inspector shall review the UBRS to determine which Visual Inspection Acceptance Level has been specified.

*(c)* The Inspector shall visually check interior and exterior surfaces. (Inspection may be made with the aid of a light placed behind the section to detect air voids, delamination, lack of fiber wetting, and other imperfections as described in Table 6-1.)

*(d)* Visual inspection shall be made before an exterior pigmented coating or insulation is applied to the shell or heads of a vessel. Where exterior pigmentation or insulation has been specified, the Fabricator, User, and Inspector must discuss and agree on visual inspection methods and arrange for closely timed and scheduled inspections.



Copyright ASME International
Provided by IHS under license with ASME
No reproduction or networking permitted without license from IHS

Not for Resale

Copyright ASME International
Provided by IHS under license with ASME
No reproduction or networking permitted without license from IHS



## TABLE 6-1 RTP VISUAL INSPECTION ACCEPTANCE CRITERIA

| Definition of Visual Inspection Levels (to be Specified by User or User's Agent): Level ① = Critically Corrosion Resistant Level ② = Standard Corrosion Resistant | | Maximum Size and Cumulative Sum of Imperfections Allowable [After Repair. See General Notes (a) and (b). Imperfections Subject to Cumulative Sum Limitation are Highlighted With an Asterisk.] | | | | | | |
|---|---|---|---|---|---|---|---|---|
| | | Inner Surface Veil(s), Surfacing Mat | | Interior Layer (~0.125 in. Thick) Mat or Chopped Strand Spray Layers | | Structural Layer Balance of Laminate (Including Outer Surface) | | |
| Imperfection Name | Definition of Imperfection | Level ① | Level ② | Level ① | Level ② | Level ① | Level ② | Notes |
| Burned areas | Showing evidence of thermal decomposition through discoloration or heavy distortion | None | None | None | None | None | Never in more than one ply and not to exceed 16 sq in. in any vessel | Discoloration only, never delamination or decomposition |
| Chips (surface) | Small pieces broken off an edge or surface | *1/8 in. dia. max. by 30% of veil(s) thickness max. | *1/8 in. dia. max. by 50% of veil(s) thickness max. | . . . | . . . | *1/4 in. dia. or 1/2 in. length max. by 1/16 in. deep | *1/2 in. dia. or 1 in. length max. by 1/16 in. deep | . . . |
| Cracks | Actual ruptures or debond of portions of the structure | None | None | None | None | None | None | Not to include areas to be covered by joints |
| Crazing (surface) | Fine cracks at the surface of a laminate | None | None | . . . | . . . | Max. 1 in. long by 1/64 in. deep, max. density 3 in any sq ft | Max. 2 in. long by 1/64 in. deep, max. density 5 in any sq ft | . . . |
| Delamination (internal) | Separation of the layers in a laminate | None | None | None | None | None | *None in three plies adjacent to interior layer, none larger than 1 sq in. total area | . . . |





Not for Resale

Copyright ASME International
Provided by IHS under license with ASME
No reproduction or networking permitted without license from IHS





## TABLE 6-1 RTP VISUAL INSPECTION ACCEPTANCE CRITERIA (CONT'D)

| Definition of Visual Inspection Levels (to be Specified by User or User's Agent): Level ① = Critically Corrosion Resistant Level ② = Standard Corrosion Resistant | | Maximum Size and Cumulative Sum of Imperfections Allowable [After Repair. See General Notes (a) and (b). Imperfections Subject to Cumulative Sum Limitation are Highlighted With an Asterisk.] | | | | | | |
|---|---|---|---|---|---|---|---|---|
| | | Inner Surface Veil(s), Surfacing Mat | | Interior Layer (~0.125 in. Thick) Mat or Chopped Strand Spray Layers | | Structural Layer Balance of Laminate (Including Outer Surface) | | |
| Imperfection Name | Definition of Imperfection | Level ① | Level ② | Level ① | Level ② | Level ① | Level ② | Notes |
| Dry spot (surface) | Area of surface where the reinforcement has not been wetted with resin | None | None | . . . | . . . | None | None | . . . |
| Edge exposure | Exposure of multiple layers of the reinforcing matrix to the vessel contents, usually as a result of shaping or cutting a section to be secondary bonded (interior of vessel only) | None | None | . . . | . . . | None | None | Edges exposed to contents must be covered with same number of veils as inner surface |
| Foreign inclusion | Particles included in a laminate which are foreign to its composition (not a minute speck of dust) | *$\frac{3}{16}$ in. long max. by dia. or thickness not more than 30% of veil(s) thickness | *$\frac{1}{4}$ in. long max. by dia. or thickness not more than 50% of veil(s) thickness | *$\frac{1}{2}$ in. long max. by dia. or thickness not more than 30% of interior layer thickness | *$\frac{1}{2}$ in. long max. by dia. or thickness not more than 50% of interior layer thickness | *Dime size, never to penetrate lamination to lamination | *Nickel size, never to penetrate lamination to lamination | Must be fully resin wetted and encapsulated |
| Gaseous bubbles or blisters | Air entrapment within, on, or between plies of reinforcement, 0.015 in. diameter and larger | Max. dia. $\frac{1}{16}$ in. by 30% of veil(s) thickness deep | Max. dia. $\frac{1}{16}$ in. by 50% of veil(s) thickness deep | Max. dia. $\frac{1}{8}$ in. | Max. dia. $\frac{1}{8}$ in. | Max. dia. $\frac{3}{16}$ in. | Max. dia. $\frac{1}{4}$ in. | Must not be breakable with a sharp point |
| | | ← Refer to User's Specification for quantity limitations → | | | | | | |
| Pimples (surface) | Small, sharp, conical elevations on the surface of a laminate | *Max. height or dia. $\frac{1}{64}$ in. | *Max. height or dia. $\frac{1}{32}$ in. | . . . | . . . | ← No limit → | | Must be fully resin filled and wetted; generally, captured sanding dust |



Not for Resale

Copyright ASME International
Provided by IHS under license with ASME
No reproduction or networking permitted without license from IHS



## TABLE 6-1 RTP VISUAL INSPECTION ACCEPTANCE CRITERIA (CONT'D)

| Definition of Visual Inspection Levels (to be Specified by User or User's Agent): Level ① = Critically Corrosion Resistant Level ② = Standard Corrosion Resistant | | Maximum Size and Cumulative Sum of Imperfections Allowable [After Repair. See General Notes (a) and (b). Imperfections Subject to Cumulative Sum Limitation are Highlighted With an Asterisk.] | | | | | | |
|---|---|---|---|---|---|---|---|---|
| | | Inner Surface Veil(s), Surfacing Mat | | Interior Layer (~0.125 in. Thick) Mat or Chopped Strand Spray Layers | | Structural Layer Balance of Laminate (Including Outer Surface) | | |
| Imperfection Name | Definition of Imperfection | Level ① | Level ② | Level ① | Level ② | Level ① | Level ② | Notes |
| Pit (surface) | Small crater in the surface of a laminate | *1/8 in. dia. max. by 30% of veil(s) thickness max. | *1/8 in. dia. max. by 50% of veil(s) thickness max. | . . . | . . . | *1/4 in. dia. max. × 1/16 in. deep max. | *1/4 in. dia. max. × 3/32 in. deep max. | No fibers may be exposed |
| Porosity (surface) | Presence of numerous visible tiny pits (pinholes), approximate dimension 0.005 in. (for example, 5 in any sq in.) | None more than 30% of veil(s) thickness | None more than 50% of veil(s) thickness | . . . | . . . | None to fully penetrate the exterior gel coat or gel coated exterior veil; no quantity limit | | No fibers may be exposed |
| Scratches (surface) | Shallow marks, grooves, furrows, or channels caused by improper handling | *None | *None | . . . | . . . | *None more than 6 in. long | *None more than 12 in. long | No fibers may be exposed |
| Wet blisters (surface) | Rounded elevations of the surface, somewhat resembling a blister on the human skin; not reinforced | *None over 3/16 in. dia. by 1/16 in. in height | *None over 3/16 in. dia. by 1/16 in. in height | . . . | . . . | ← No limit → | | Must be fully resin filled; not drips loosely glued to surface, which are to be removed |
| Wet-out inadequate | Resin has failed to saturate reinforcing (particularly woven roving) | None | None | None | None | Dry mat or prominent and dry woven roving pattern not acceptable; discernible but fully saturated woven pattern acceptable | | Split tests on cutouts may be used to discern degree of saturation on reinforcing layers |





Not for Resale

Copyright ASME International
Provided by IHS under license with ASME
No reproduction or networking permitted without license from IHS





## TABLE 6-1 RTP VISUAL INSPECTION ACCEPTANCE CRITERIA (CONT'D)

| Definition of Visual Inspection Levels (to be Specified by User or User's Agent): Level ① = Critically Corrosion Resistant Level ② = Standard Corrosion Resistant | | Maximum Size and Cumulative Sum of Imperfections Allowable [After Repair. See General Notes (a) and (b). Imperfections Subject to Cumulative Sum Limitation are Highlighted With an Asterisk.] | | | | | | |
|---|---|---|---|---|---|---|---|---|
| | | Inner Surface Veil(s), Surfacing Mat | | Interior Layer (~0.125 in. Thick) Mat or Chopped Strand Spray Layers | | Structural Layer Balance of Laminate (Including Outer Surface) | | |
| Imperfection Name | Definition of Imperfection | Level ① | Level ② | Level ① | Level ② | Level ① | Level ② | Notes |
| Wrinkles and creases | Generally linear, abrupt changes in surface plane caused by laps of reinforcing layers, irregular mold shape, or mylar overlap | Max. deviation 20% of wall or 1/16 in., whichever is less | Max. deviation 20% of wall or 1/8 in., whichever is less | . . . | . . . | Max. deviation 20% of wall or 1/8 in., whichever is less | | Not to cause a cumulative linear defect (outside defect adding to inside defect) |
| Allowable cumulative sum of highlighted imperfections | Maximum allowable in any sq ft | 3 | 5 | 3 | 5 | 5 | 5 | . . . |
| | Maximum allowable in any sq yd | 15 | 20 | 20 | 30 | 30 | 40 | . . . |
| Maximum % repairs | The maximum allowable area of repairs made in order to pass visual inspection | 3% | 10% | 3% | 10% | 3% to structural, no limit to outer surface repairs | 10% to structural, no limit to outer surface repairs | Debond tests required prior to inner surface repairs |

GENERAL NOTES:
(a) Above acceptance criteria apply to condition of laminate after repair and hydrotest.
(b) Noncatalyzed resin is not permissible to any extent in any area of the laminate.
(c) Refer to Appendix M–7 for rules on repairs.



Not for Resale

*(e)* The Inspector shall record the results of the visual inspection in the inspection report.

(b) *(f) Balsa Wood Core Laminates*

*(1)* Visual inspection of the component shall be required from the interior side of the laminate to check for delamination of the balsa wood core.

*(2)* Laminates that are to have a balsa wood core applied over them after resin saturation and prior to curing shall be visually inspected prior to applying the balsa wood core.

*(3)* The Fabricator shall take the appropriate measures to ensure adhesion of the interior laminate to the balsa wood core.

## 6-950 Pressure Tests and Acoustic Emission Tests

*(a)* A water fill hydrostatic test shall be performed on all vessels designed to operate above 0.5 psig internal pressure. The test pressure at the top of the vessel shall be 110% to 120% of the design pressure.

*(b)* A vessel designed to operate at or below 0.5 psig internal pressure shall be filled with water to at least its full designated liquid capacity, regardless of the specific gravity of the material to be contained.

*(c)* Vessels with an inside diameter less than or equal to 16 ft and a design external pressure less than or equal to 6 in. of water, and vessels larger than 16 ft inside diameter with a design external pressure less than or equal to 1 in. of water, are exempt from vacuum testing. All other vessels designed for vacuum service shall be evacuated to the design external pressure.

**WARNING: Suitable precautionary measures shall be taken to protect personnel and property from a catastrophic implosion failure during the test.**

It should be noted that attainment of full vacuum is not possible due to the limitations of evacuation equipment. Where vacuum tests are required, the User or User's Agent and the Fabricator must agree on the maximum allowable absolute pressure to be achieved during the test. Such agreement must be reached prior to the start of fabrication and must be documented in the UBRS and pressure test inspection report.

*(d)* The Fabricator shall have written procedures for pressure testing. The test pressure shall be held for a minimum of 2 hr. No visible leakage is permissible during the 2 hr hold on an internal pressure test. Some leakage is permissible during a vacuum test, provided the vacuum test pressure is held for the 2 hr minimum (this may require continuous connection to the vacuum source). Subsequent to all pressure testing, the vessel must pass a visual inspection per para. 6-940. During pressure testing, vessels shall be supported similar to the way they will be supported in service (so that the loads imposed on the vessel and the supports are similar to those of the expected service loads). If the pressure test generates an upward force, all anchor bolts must be secured. (b)

*(e)* When it is not practical to conduct a pressure test until the equipment has been installed in service position, the test may be conducted at the installation site.

*(f)* The Inspector shall witness all pressure tests, verify the test results, and record results of the test in the inspection report.

*(g)* If acoustic emission tests are required by the UBRS or are mandatory under design provisions of this Standard [see para. 3B-500(c)], the Inspector shall witness the tests and verify that the procedures used were in accordance with Appendix M-8.

## 6-960 Procedures for Rectifying Nonconformities or Imperfections

Appendix M-7 describes approved procedures for rectifying nonconformities or imperfections.

Mandatory documentation requirements for rectifying nonconformities or imperfections are outlined in Appendix M-4, para. M4-400(e).

The Inspector shall include the documentation of nonconformity or imperfection rectification in the inspection report.



Copyright ASME International
Provided by IHS under license with ASME
No reproduction or networking permitted without license from IHS
Not for Resale

# PART 7
# SHOP QUALIFICATION

## 7-100 SCOPE

This Part covers the requirements a Fabricator shall meet in order to qualify capability in accordance with this Standard. Included are the Fabricator's facilities, personnel, Quality Control Program, and required demonstration of capability.

## 7-200 GENERAL

A Fabricator shall seek to fabricate vessels according to the rules of this Standard only in the general size range for which the shop has experience.

### 7-210 Shop Survey

Fabricators who desire a shop location to be accredited according to the rules of this Standard shall be surveyed by an ASME survey team. The survey team shall verify that all requirements of Part 7 and Part 8 are met.

## 7-300 FABRICATOR'S FACILITIES AND EQUIPMENT

*(a)* The shop area and field site shall have designated areas for:

*(1)* storage of resin, catalyst, promoter, solvent, and other chemicals;

*(2)* resin mixing and dispensing;

(b) *(3)* bulk reinforcement and core material storage;

*(4)* tools and maintenance materials.

*(b)* Head molds (other than cone shapes or flat covers) shall be as follows:

*(1)* ASME torispherical flanged and dished heads, a 2:1 semielliptical head, or a hemispherical head;

*(2)* flanged flat head molds that will produce heads that satisfy para. 3A-260 and Fig. 4-3.

*(c)* Laboratory equipment shall be available for the quality control of bulk resin, reinforcing materials as received, and resin mixes as dispensed to fabrication personnel. Refer to Appendices M-1 and M-2.

## 7-400 PERSONNEL

The Fabricator's organization shall include specific personnel designated for each function listed below.

*(a) Design and Drafting.* As an alternative, this function may be performed by outside qualified engineering personnel. Design and drafting will be in accordance with requirements in Parts 1, 3, 4, and 6 of this Standard.

*(b) Quality Control.* See Appendix M-4.

*(c) Material Control and Issue.* This will include mixing and testing of resins, and inspection and cutting of reinforcement. See Appendices M-1 and M-2.

*(d) Fabrication*

*(e) Laminators and Secondary Bonders.* Laminators and Secondary Bonders shall be qualified in accordance with Appendix M-5.

## 7-500 QUALITY CONTROL PROGRAM, DOCUMENT HANDLING, AND RECORD SYSTEM

*(a)* The Fabricator shall establish and maintain an effective Quality Control Program throughout all phases of the fabricating process to ensure that all applicable requirements of this Standard are met. Refer to Part 6 and Appendices M-4 and NM-6.

*(b)* The Fabricator shall have a procedure that assures only the most current revision of latest and/or correct drawings, specifications, purchase orders, and quality control procedures are used for procurement, fabrication, and inspection purposes.

*(c)* A record keeping system satisfying the requirements of this Standard shall be in use and available for audit by the Certified Individual, the Inspector, and the User's representative.

## 7-600 DEMONSTRATION OF CAPABILITY (Demonstration Laminates)

*(a)* Each Fabricator's shop must demonstrate the ability to fabricate laminates as required by the rules



Copyright ASME International
Provided by IHS under license with ASME
No reproduction or networking permitted without license from IHS

Not for Resale

**TABLE 7-1 REQUIRED RESINS AND ACCEPTABLE FABRICATION PROCESSES FOR DEMONSTRATION LAMINATES**

| Type [Note (1)] | Nominal Demonstration Laminate Thickness, in. [Note (2)] | Required Resins [Note (3)] | Fabrication Process [Note (4)] | Qualification |
|---|---|---|---|---|
| Type I | 0.48 | 1 polyester, 1 vinyl ester | 1, 2 | All resins, all thicknesses |
| Type II | 0.49 | 1 polyester, 1 vinyl ester | 1, 2 | All resins, all thicknesses |
| Filament wound | 0.37 to 0.625 | 1 polyester, 1 vinyl ester | 3 | All resins, all thicknesses |

GENERAL NOTE: A Fabricator must qualify all those fabrication processes planned to be used to construct vessels to this Standard.

NOTES:
(1) Designates laminate reinforcement type.
(2) Thicknesses are nominal only. Sizable variations in actual thickness can be expected based on variables such as technique and the selection of resin and glass.
(3) Generic classes of resins required for qualification.
(4) Process employed to produce the laminate:
1 — Hand lay-up.
2 — Spray-up using a chopper gun device.
3 — See para. 7-620(b).

of this Standard. Such demonstration qualifies the Fabricator to produce laminates by those specific processes qualified for a maximum period of 5 years.

*(b)* Each Fabricator's shop must redemonstrate the ability to fabricate laminates, as required by the rules of this Standard, at no greater intervals than 5 years.

*(c)* Subparts 2A and/or 2B provide specific rules governing all laminates and refer to design basis laminates that a Fabricator is required to make in order to establish values for strength, thickness, and glass content. The demonstration laminates required by this Part are for the purpose of qualifying the Fabricator and shop procedures. They may also be used to qualify Laminators (see Appendix M-5). Demonstration laminates and design basis laminates are not the same in purpose; hence requirements in terms of configuration, quantity to be produced, and tests may differ.

*(d)* Demonstration laminates are required for each type of laminate and each laminating process the Fabricator shall use on vessels fabricated to this Standard; refer to Table 7-1. Table 7-1 also summarizes, by laminate type, the qualification (thickness and resins) a Fabricator shall achieve by producing satisfactory demonstration laminates.

*(e)* Each demonstration laminate shall be identified and labeled by the Fabricator in accordance with para. 7-900.

*(f)* Demonstration laminates shall be tested in accordance with this Standard by an independent testing laboratory. The independent testing laboratory shall return the remains of the demonstration laminate and specimens with a certified written report. The report shall state the results of the tests.

*(g)* A Fabricator's shop is qualified to produce a specific type of laminate by a specific process provided the certified test report indicates that the demonstration laminate meets or exceeds the requirements of this Standard. See para. 7-700.

*(h)* Upon the successful completion of a Demonstration Laminate Test Program, Fabricators shall complete a document of "Demonstration Laminate Certification." This document is to be maintained within the Fabricator's quality control files and a copy shall be made available to a User, User's Agent, or Inspector on request. In this document the Fabricator shall certify, via the dated signature of his or her authorized agent, the following.

*(1)* The demonstration laminate samples were constructed according to all requirements of this Standard.

*(2)* Tests were conducted on the demonstration laminates according to all requirements of this Standard.

*(3)* The test data has been carefully examined by the Fabricator and the results are in accordance with all requirements of this Standard.



Copyright ASME International
Provided by IHS under license with ASME
No reproduction or networking permitted without license from IHS
Not for Resale

**TABLE 7-2 DIMENSIONAL REQUIREMENTS FOR HAND LAY-UP AND SPRAY-UP DEMONSTRATION LAMINATES**

| Req. No. | Requirements |
|---|---|
| (1) | A demonstration laminate must be square within ±0.3 deg, measuring 24 in. ±1/16 in. on each side. |
| (2) | The peak deviation from flatness of the inner surface shall not exceed 3/16 in. |
| (3) | The average spot thickness of a demonstration laminate shall be determined by procedures outlined in para. 6-920 and shall be within tolerances established in Subpart 2C. |
| (4) | Edges of a demonstration laminate shall be smooth and not jagged. Edge indentation or chips shall not exceed 1/32 in. in depth. |
| (5) | For demonstration laminates made by the spray-up process, a 24 in. x 24 in. test sample is to be cut from the center of an approximately 30 in. x 30 in. fabrication. |

*(4)* The next required date for demonstration of capability via demonstration laminates shall be indicated.

*(5)* Test reports from the independent testing laboratory are referenced by the specific date and/or reference number within the certification document and a copy attached thereto.

## 7-610 Hand Lay-Up and Spray-Up Demonstration Laminates

*(a)* All Fabricators must produce and qualify hand lay-up Type I and Type II laminates in accordance with requirements in Tables 7-1, 7-2, and 7-3.

*(b)* Those Fabricators who plan to produce laminates by the spray-up (chopper gun) process must also produce and qualify spray-up Type I and Type II laminates in accordance with requirements in Tables 7-1, 7-2, and 7-3.

*(c)* After fabrication, the Fabricator shall identify each demonstration laminate in accordance with the instructions in para. 7-900.

*(d)* The quality control records must contain a description of the fabrication procedure used to produce each demonstration laminate.

*(e)* The mechanical properties of each demonstration laminate shall be determined in accordance with para. 7-1000.

## 7-620 Filament Wound Demonstration Laminates

*(a)* Those Fabricators who plan to produce laminates by the filament winding process must produce and qualify filament wound laminates in accordance with the requirements in Table 7-1. Qualification for filament winding shall be in addition to qualification for Type I or Type II laminates. Both qualifications are required for Fabricators planning to construct filament wound vessels to this Standard, as Type I or Type II laminates are required for the fabrication of heads or when joining the subassemblies of vessels together.

*(b)* Since there are many process variations employed to produce filament wound laminates, each requiring distinctly different tooling, controls, and skills, this Standard requires that a Fabricator qualify all those process variations to be used in the construction of filament wound vessels to this Standard.

Some examples of process variations, each requiring a demonstration laminate, are:

*(1)* dry continuous filament winding, shop fabrication

*(2)* wet (bath) continuous filament winding, shop fabrication

*(3)* tape winding in conjunction with (1) or (2) above, shop fabrication

*(4)* spray-up in conjunction with (1) or (2) above

It is possible to qualify more than one of the above variables in a single demonstration laminate, so long as that resulting laminating process shall routinely be employed to produce vessels to this Standard.

*(5)* dry continuous filament winding, field fabrication

*(6)* wet (bath) continuous filament winding, field fabrication

*(7)* tape winding in conjunction with (5) or (6) above, field fabrication



Copyright ASME International
Provided by IHS under license with ASME
No reproduction or networking permitted without license from IHS
Not for Resale

**TABLE 7-3 REINFORCEMENT REQUIREMENTS FOR HAND LAY-UP AND SPRAY-UP DEMONSTRATION LAMINATES** (00)

| Laminate Type | Nominal Thickness, in. [Notes (1), (2)] | Liner Plies | | | Structural Plies | | | | | | | | | |
|---|---|---|---|---|---|---|---|---|---|---|---|---|---|---|
| | | 1 | 2 | 3 | 4 | 5 | 6 | 7 | 8 | 9 | 10 | 11 | 12 | 13 |
| Type I | 0.48 | *V* | *M* | *M* | *M* | *M* | *M* | *M* | *M* | *M* | *M* | *M* | *M* | ... |
| Type II | 0.49 | *V* | *M* | *M* | *M* | *R* | *M* | *R* | *M* | *R* | *M* | *M* | *R* | *M* |

GENERAL NOTES:
(a) Thicknesses above 0.76 in. nominal can be used following pattern established for 0.76 in. thick laminate.
(b) Actual thickness and glass content of each sequence of plies shall be established by each Fabricator based on his or her design basis laminate.
(c) Corrosion barrier (plies 1, 2, and 3) shall gel and exotherm before structural plies are added.
(d) Structural lay-up may be interrupted long enough to exotherm between adjacent "*MM*" plies. If required by fabrication procedure, location of exotherm plies may be changed by shifting ply 10 within the laminate body or by splitting an "*M*" ply into weight-equivalent layer(s).
(e) A weight equivalent layer or layers of chopped strand glass or mat may be used in place of layers of 1.5 oz mat.

NOTES:
(1) Nominal thickness is calculated as follows:
*V* = 10 mil surface mat (veil) – 0.010 in./ply
*M* = 1½ oz/sq ft mat – 0.043 in./ply
*R* = 24 oz/sq yd woven roving – 0.033 in./ply
(2) This information is based on historical data and may not reflect all laminates made today. Laminates made today are often thinner and have a higher glass content than noted in the Table. The Table should be used for establishing minimum glass plies per nominal laminate thickness. Ply thicknesses should be based on design basis laminates.

*(8)* spray-up in conjunction with (5) or (6) above, field fabrication

*(c)* Demonstration laminates shall have a Type I hand lay-up or spray-up liner over which the structural filament wound layer is applied. This liner shall exotherm and cool before the structural filament wound layer is applied.

*(d)* A minimum of one ply of ¾ oz/sq ft chopped strand mat or an equivalent weight by the chopped spray method shall be applied over the liner immediately before starting the filament wound structural layer.

*(e)* A filament wound demonstration laminate shall be a 24 in. × 24 in. ±1/16 in. section cut from a hoop, wound on a mandrel with a minimum diameter of 8 ft to minimize the effects of curvature on sample testing. The width of the hoop shall be greater than 24 in. by a margin sufficient to avoid turnaround areas in the 24 in. × 24 in. cut section from which test samples shall be taken.

*(f)* The thickness of the demonstration laminate shall be 0.37 in. minimum, but may be increased up to 0.625 in. to allow for variations in winding or laminating sequences which require thicknesses over 0.37 in. to complete.

*(g)* Filament wound demonstration laminates shall be tested in accordance with para. 7-1000, with the exception that both *hoop* and *axial* physical property tests shall be conducted in accordance with the instructions in para. 7-1000(c). Also, disregard para. 7-1000(a)(2).

*(h)* Refer to para. 7-900(a)(4). Fabricators shall provide a comprehensive description of the filament wound laminate sequence.

## 7-700 MINIMUM TEST VALUES FROM DEMONSTRATION LAMINATES

*(a) Type I or Type II Demonstration Laminates*

*(1)* Dimensions shall be within tolerances outlined in Table 7-2.

*(2)* Barcol hardness readings shall show that 80% of the readings meet or exceed 90% of the resin manufacturer's published casting hardness data.

*(3)* Tensile strength and tensile modulus values shall meet or exceed the values given in Table 2A-3.

*(b) Filament Wound Demonstration Laminates*

*(1)* Dimensions shall be within tolerances outlined in paras. 7-620(e) and (f).

*(2)* Refer to para. (a)(2) above for Barcol hardness requirements.

*(3)* Hoop tensile strength and tensile modulus values shall meet or exceed the values given for a Type II 0.37 in. thick laminate in Table 2A-3.



Copyright ASME International
Provided by IHS under license with ASME
No reproduction or networking permitted without license from IHS
Not for Resale

*(4)* Axial tensile strength and tensile modulus values shall meet or exceed those values given for a Type I laminate in Table 2A-3.

## 7-800 DEMONSTRATION VESSEL

Fabricators shall design, fabricate, and must satisfactorily test a demonstration vessel in accordance with instructions contained in Appendix M-6.

The design and fabrication of the demonstration vessel requires a comprehensive understanding of this Standard. It involves a full demonstration of the Fabricator's ability to design, execute drawings, qualify demonstration laminates, establish design values from design basis laminates, qualify Laminators and Secondary Bonders, and fabricate under effective overview of the Fabricator's Quality Control Program, all in full accordance with the requirements of this Standard.

No Fabricator shall claim qualification to fabricate to this Standard until having satisfactorily completed and tested the demonstration vessel in accordance with the instructions in Appendix M-6.

## (00) 7-900 IDENTIFYING DEMONSTRATION LAMINATES

*(a) Identification Report.* A complete identification report shall accompany each demonstration laminate. This must include:

*(1)* Fabricator's shop name, address, phone number

*(2)* identification of person fabricating the laminate

*(3)* date the laminate was completed

*(4)* fabrication process

*(5)* description of fabrication materials used

*(a)* resin manufacturer's name and designation for resin

*(b)* generic class of resin

*(1)* polyester

*(2)* vinyl ester

*(c)* reinforcement manufacturer's name(s) and designation for reinforcement(s)

*(b) Labeling.* The Fabricator shall clearly label each demonstration laminate with the following:

*(1)* name of the Fabricator's shop and identification of person who fabricated the laminate

*(2)* date laminate was completed

*(3)* type of laminate (Type I, Type II, filament wound)

*(4)* inner surface and outer surface must be identified

*(5)* the two warp strand edges on Type II laminates, and hoop and axial directions on filament wound laminates, must be identified

*(6)* resin and reinforcement manufacturers and their Manufacturer's Specific Product Identifications (MSPI)

## 7-1000 LABORATORY TEST AND TEST REPORT REQUIREMENTS FOR DEMONSTRATION LAMINATES (00)

The demonstration laminate specimen must be tested, and information recorded and reported, in accordance with the following requirements.

*(a) Dimensional Measurements of the Demonstration Laminate*

*(1)* The length and width of the demonstration laminate shall be measured and recorded.

*(2)* The flatness of the demonstration laminate shall be determined by measuring the maximum possible gap under a straightedge placed on the veil side and moved about to achieve a maximum gap; this gap shall be recorded. (Disregard for filament wound laminates.)

*(3)* The average thickness of the demonstration laminate shall be determined using the procedures outlined in para. 6-920(f)(2)(a). All measurement data shall be recorded. Measurements should be taken at the approximate center of the demonstration laminate.

*(4)* The testing report shall summarize measurements taken and state compliance or nonconformance with the requirements of this Standard. Reference is made to Table 7-2, paras. 7-620(e) and (f), and Subpart 2C.

*(b) Barcol Hardness and Acetone Sensitivity Test*

*(1)* Barcol hardness shall be determined on the demonstration laminate inner surface in accordance with para. 6-910(b), and all Barcol readings shall be recorded.

*(2)* 80% of the Barcol hardness readings taken must meet or exceed 90% of the resin manufacturer's published hardness data.

*(3)* An acetone sensitivity test shall be conducted in accordance with para. 6-910(b)(7).

*(4)* The testing report shall summarize the Barcol hardness measurements and the results of the acetone sensitivity test, and state compliance or nonconformance with the requirements of this Standard.

*(c) Tensile Strength and Tensile Modulus of Elasticity*

*(1)* Tensile strength and tensile modulus of elasticity shall be determined using the method given in ASTM D 638.

*(2)* Test specimens shall be taken from equally spaced areas on the demonstration laminate. Specimens



Copyright ASME International
Provided by IHS under license with ASME
No reproduction or networking permitted without license from IHS
Not for Resale

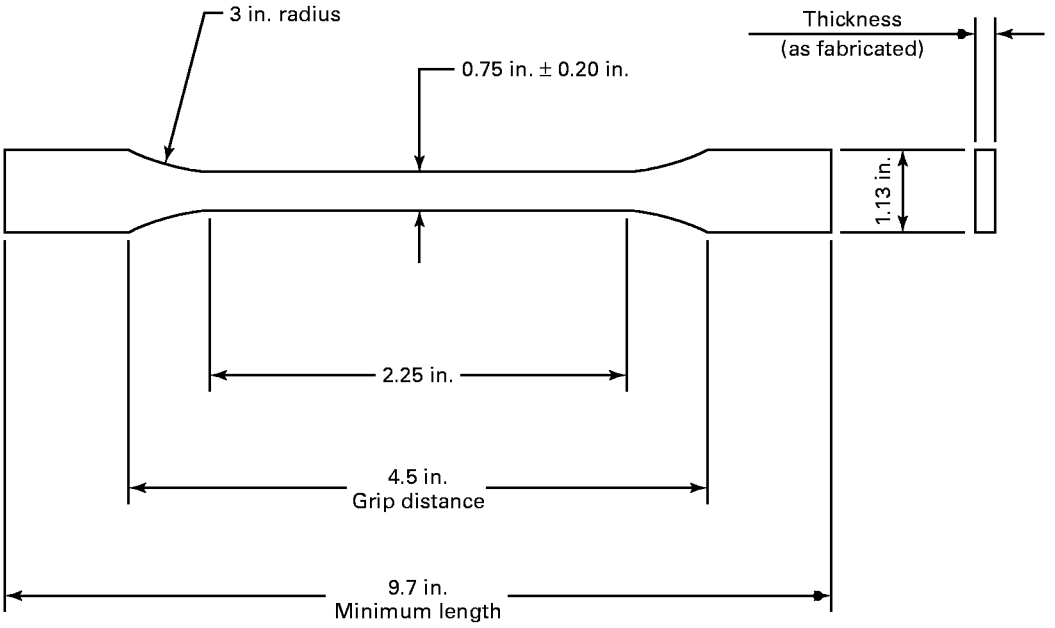


**FIG. 7-1 DIMENSIONS FOR TENSILE TEST SPECIMEN**

must be cut parallel to the edge of the laminate and the procedure must not chip, tear, or degrade the specimens. Type II test specimens shall be cut parallel to the labeled warp strand edge. The thickness of the specimens shall be the full thickness of the laminate and must not be machined on the inner or outer surfaces. Both hoop and axial test coupons are required for anisotropic laminates.

*(3)* Test specimens shall be machined to the dimensions shown in Fig. 7-1.

*(4)* The testing report shall include the following data and shall state compliance or nonconformance with the requirements of this Standard (see para. 7-700):

*(a)* testing speed, in./min

*(b)* width and thickness of each specimen, in.

*(c)* peak load for each specimen, lb

*(d)* tensile strength of each specimen, psi

*(e)* tensile modulus of elasticity of each specimen, psi

*(f)* average tensile strength, psi

*(g)* average tensile modulus, psi

*(d) Glass Content and Reinforcing Sequence*

*(1)* The glass content weight percent shall be determined by the method given in ASTM D 2584.

*(2)* A 1 in. wide strip shall be cut from the demonstration laminate. This strip shall be cut into three 1 in. long specimens.

*(3)* The testing report shall include the following data and shall state compliance or nonconformance with the requirements of this Standard (see para. 7-700):

*(a)* pyrolysis temperature

*(b)* specimen weight before ignition, g

*(c)* weight of specimen plus crucible, before ignition and after ignition, g

*(d)* reinforcing sequence identification in the general form of Table 2A-2; report in drafting symbol style (by visual inspection)

*(e)* ignition loss for each specimen, g

*(f)* resin content of each specimen and average, wt %

*(g)* glass content of each specimen and average, wt %



Copyright ASME International
Provided by IHS under license with ASME
No reproduction or networking permitted without license from IHS
Not for Resale

# PART 8
# ACCREDITATION

## 8-100 SCOPE

Part 8 provides rules for accreditation of Fabricators of RTP vessels.

## 8-200 GENERAL

An accredited Fabricator is one who holds a valid ASME RTP-1 Certificate of Authorization.

The responsibilities set forth herein relate only to compliance with this Standard and are not to be construed as involving contractual or legal liabilities.

## 8-210 ASME RTP-1 Certificate of Authorization Holders

The ASME RTP-1 Certificate of Authorization holder is the Fabricator of an RTP vessel who certifies that the vessel complies with all requirements of this Standard.

## (00) 8-220 ASME RTP-1 Certificate of Authorization Holder's Responsibilities

*(a) Use of the Certificate and Symbol.* When authorization is granted, each applicant agrees to the following:

*(1)* the Certificate and the Symbol are at all times the property of ASME;

*(2)* they shall be used according to the rules and regulations of this Standard;

*(3)* they shall be promptly returned to ASME upon demand or when the applicant discontinues the scope of work covered by his or her Certificate.

*(b) Examples of the ASME RTP-1 Certificate Holder's Responsibilities.* Responsibilities include the following:

*(1)* obtaining an ASME RTP-1 Certificate in accordance with para. 8-400;

*(2)* compliance with this Standard;

*(3)* evaluation and approval of material manufacturers, and suppliers of parts and subcontracted services, in accordance with Appendix M-4;

*(4)* establishing and maintaining a Quality Control Program in accordance with Appendix M-4;

*(5)* filing of a Quality Control Manual in accordance with para. 8-220(f); and

*(6)* furnishing the User or User's Agent with the appropriate Fabricator's Data Report(s).

*(c) ASME RTP-1 Certificate of Authorization.* The holder of a Certificate of Authorization shall not permit any other party to use the Certificate or RTP Symbol issued to the holder.

*(d) Compliance With This Standard.* The ASME RTP-1 Certificate Holder shall fabricate vessels to be marked RTP in compliance with this Standard.

*(e) Subcontracting.* The Fabricator completing any vessel to be marked with the RTP Symbol has the responsibility of assuring that any work done by others complies with all the requirements of this Standard.

*(f) Filing of Quality Control Manual.* The ASME RTP-1 Certificate Holder shall file and maintain a copy of the ASME-accepted Quality Control Manual with ASME. If the Certificate Holder wishes to change the program to a degree requiring changes to the manual, the Certificate Holder shall submit the proposed changes to ASME, which shall accept or reject them in writing.

## 8-300 ACCREDITATION FOR ASME RTP-1 FABRICATORS

### 8-310 General

When requested by the applicant on forms designated by ASME, ASME will arrange for an evaluation of the applicant's Quality Control Program and shop qualifications. Forms may be obtained by request to Codes and Standards Conformity Assessment, The American Society of Mechanical Engineers. Three Park Avenue, New York, NY 10016-5990.

### 8-320 Evaluation of the Quality Control Program

*(a)* The evaluation consists of the following:

*(1)* evaluation of the applicant's Quality Control Manual and capability of implementation; and

*(2)* evaluation of the applicant's implementation



Copyright ASME International
Provided by IHS under license with ASME
No reproduction or networking permitted without license from IHS
Not for Resale

of the program described in his or her Quality Control Manual.

*(b)* The acceptance by ASME of a Quality Control Program shall not be interpreted to mean endorsement of technical capability to perform design work.

### 8-330 Evaluation of Shop Qualifications

The evaluation shall be in accordance with Part 7.

## 8-400 ASME RTP-1 CERTIFICATE OF AUTHORIZATION FOR VESSEL FABRICATORS

### 8-410 General

A Fabricator shall obtain a valid Certificate of Authorization in accordance with para. 1-520, in order to stamp the vessel.

### 8-420 Application for Certificate of Authorization

Each applicant shall identify the specific location(s) covered, and state the scope and limits of any activities for which authorization is granted. At its discretion, ASME may limit or extend the scope of an authorization.

The Certificate of Authorization shall include but not be limited to the following scopes of work: shop fabrication, shop and field fabrication, and shop fabrication and field modification or repair in accordance with Appendix M-7. All Certificate of Authorization holders shall be capable of both shop and field testing per para. 6-950.

### 8-430 Verification of Shop Qualification

An organization requesting accreditation shall have its shop(s) surveyed by an ASME-approved survey team to assure that the requirements of Part 7 and Part 8 are met.

### 8-440 Issuance of ASME RTP-1 Certificate of Authorization

*(a)* The Certificate may be granted or withheld by ASME at its discretion.

*(b)* When satisfied that the applicant has complied with the requirements of this Standard, ASME shall issue an ASME RTP-1 Certificate of Authorization. The three-year certificate is issued to a Fabricator for a specific location(s) as defined in the application and accepted by ASME, and it shall describe the scope and limits of work for which the applicant is accredited.

*(c)* If ASME RTP-1 authorization is given and the proper administrative fee is paid, the Certificate of Authorization shall be forwarded to the applicant.

*(d)* After initial accreditation, ASME shall institute a continuing audit program of the Certificate Holder's Quality Control Program.

*(e)* Each Certificate shall be signed by duly authorized ASME personnel.

*(f)* Six months prior to the date of expiration of any such Certificate, the applicant shall apply for a renewal of authorization.

*(g)* Failure to apply for renewal of the Certificate in time and with appropriate documentation may cause loss of accreditation until such time as reaccreditation procedures can be undertaken and all requirements for reaccreditation have been met.

*(h)* ASME reserves the right to cancel or refuse to renew accreditation.

### 8-450 Obtaining Stamps

All stamps for applying the ASME RTP-1 Symbol shall be obtained from ASME. This Symbol is shown in Fig. 1-1.

### 8-460 Requirements Subject to Change

ASME may make requirements concerning the issuance and use of Certificates and Symbols as it deems appropriate. Such requirements shall become binding on the Certificate Holder upon notification by ASME.



Copyright ASME International
Provided by IHS under license with ASME
No reproduction or networking permitted without license from IHS
Not for Resale

Copyright ASME International
Provided by IHS under license with ASME
No reproduction or networking permitted without license from IHS
Not for Resale

# MANDATORY APPENDIX M-1
# REINFORCEMENT MATERIALS RECEIVING PROCEDURES

## M1-100 INTRODUCTION

All inspections and tests specified in this Appendix are to be performed by Fabricator personnel or an independent testing laboratory.

## ARTICLE A
## FIBERGLASS SURFACING VEIL (MAT), ORGANIC FIBER SURFACING VEIL (MAT), CARBON FIBER VEIL (MAT), AND FIBERGLASS CHOPPED STRAND MAT

## M1A-100 INTRODUCTION

This Article specifies the minimum inspections and tests that shall be performed on the rolls of fiberglass surfacing veil, organic fiber surfacing veil, and fiberglass chopped strand mat that shall be used to fabricate equipment to this Standard.

## M1A-200 ACCEPTANCE INSPECTION

Acceptance inspection shall include inspection of all rolls for proper packaging and identification, and contamination. This acceptance inspection is to be conducted on the unopened roll. Acceptance requirements and limits are as defined in para. M1A-410. Acceptance inspection shall include inspection of selected rolls for measurement of unit weight per ASQ Z1.4 criteria. Inspection for manufacturing imperfections shall be conducted during use of rolled goods. Acceptance requirements and limits are as defined in paras. M1A-420 and M1A-430.

The form shown in Table M1A-1, or a similar form that contains the provisions to record the results of these required inspections and certifications, if applicable, shall be used by the Fabricator and shall be retained in the inspection records. A separate form shall be used for each mat manufacturer, mat nomenclature, mat treatment, and mat unit weight.

In lieu of performing the above manufacturing inspections, measurements, and documentation, the Fabricator shall provide the User or User's Agent with a Certificate of Compliance from the material manufacturer. This Certificate shall assure that materials were manufactured, inspected, and tested per the material supplier's specifications.

## M1A-300 EQUIPMENT AND MEASURING TOOLS REQUIRED

### M1A-310 Inspection Table and Lights

An inspection table and adequate overhead lighting that are suitable for the inspection and testing of the mat are required. The equipment used must not introduce contamination to the mat during inspection and testing.

### M1A-320 Linear Measuring Tools

A standard linear measuring tool (longer than the width of the rolls) that measures the roll widths with minimum accuracy of $\pm 1/8$ in. is required. A 12 in. $\pm 1/32$ in. × 12 in. $\pm 1/32$ in. template is required.

### M1A-330 Laboratory Balance

A laboratory balance that measures to 0.1 g is required.

## M1A-400 PROCEDURES AND ACCEPTANCE LIMITS

### M1A-410 Roll Identification and Package Inspection

The mat shall be packaged as shipped from the mat manufacturer's factory. If repackaging is required, the Fabricator shall assure that a material Certificate of Compliance traceable to the original material is provided. The original labels can be modified in regards to number and width of rolls only. All other documentation shall remain unchanged. Verify and enter in the inspection record that the mat rolls as identified by the mat manufacturer have the same nomenclature as the mat specified to produce the laminate by Subparts 2A and 2B, and examine the packaging of the mat for



Copyright ASME International
Provided by IHS under license with ASME
No reproduction or networking permitted without license from IHS
Not for Resale

## TABLE M1A-1 VEIL AND MAT REINFORCEMENT LOG SHEET

Fabricator's name _____ Mat manufacturer _____

Address _____ Mat nomenclature _____

_____ Mat treatment (if given) [Note (1)] _____

_____ QC file no. _____ Mat weight [Note (2)] _____

| 1 Roll No. | 2 Reinforcement Production Date (if Given) | 3 Lot. No. [Note (1)] | 4 Packaging Inspection | | 5 Width | 6 Weight of sq ft Sample | 7 Property Inspection (Cols. 5 and 6) | | 8 Visual Inspection | |
|---|---|---|---|---|---|---|---|---|---|---|
| | | | By | Date | | | By | Date | By | Date |
| 1 | | | | | | | | | | |
| 2 | | | | | | | | | | |
| 3 | | | | | | | | | | |
| 4 | | | | | | | | | | |
| 5 | | | | | | | | | | |
| 6 | | | | | | | | | | |
| 7 | | | | | | | | | | |
| 8 | | | | | | | | | | |

Comments on visual and packaging inspection (indicate which roll):

_____

_____

GENERAL NOTE: This form may be reproduced and used without written permission from ASME if used for purposes other than republication.

NOTES:
(1) Lot, batch, product code, or other label identification.
(2) Manufacturer's label weight.



Copyright ASME International
Provided by IHS under license with ASME
No reproduction or networking permitted without license from IHS
Not for Resale

damage that renders the mat unusable. Indicate acceptable rolls by recording the date and name of the person performing the examination in Table M1A-1, column 4.

For packaged mats that are found to be acceptable for further inspection and tests, enter the reinforcement production date and lot number in Table M1A-1, columns 2 and 3.

### M1A-420 Visual Inspection of Mat

*(a)* As the mat is used during fabrication, it shall be visually inspected for imperfections and contamination. Date and name of person performing visual inspection shall be recorded in Table M1A-1, column 8.

*(b)* The mat shall be uniform in color, texture, and appearance. Imperfections and/or contaminants shall be removed so as not to damage the mat or by making two parallel cuts across the width of the mat and discarding the rectangular section of the mat containing the defects. Contaminants do not include white or light gray binder spots.

NOTE: Examples of imperfections are holes, cuts, thin spots, or delaminations, i.e., separating into layers during unrolling. Examples of contaminants are dirt, oil, grease, and foreign objects.

*(c)* Rolls having any of the following defects shall not be used in laminates made to this Standard:

*(1)* wet spots
*(2)* water contamination
*(3)* bar marks
*(4)* lengthwise wrinkles exceeding 5 ft in length

### M1A-430 Weight per Square Foot of Mat

From the leading edge of each roll of mat that will be tested as per para. M1A-200, cut a 1 sq ft (10 sq ft for surfacing veil) sample using the template specified in para. M1A-320. If the roll is less than 12 in. wide, use the full width of the roll, but adjust the length of the sample (use the linear measuring tool specified in para. M1A-320). Any property measurement shall be conducted by unrolling only the quantity of material required to conduct the test. Using the laboratory balance required by para. M1A-330, weigh the sample of mat to the nearest 0.1 g. Convert the grams to ounces, if needed, by multiplying grams by 0.0352. If the sample from a roll falls outside the mat manufacturer's specified weight range, the roll of mat shall be rejected. Enter the values of weighed samples for acceptable and unacceptable rolls in the inspection form in Table M1A-1, column 6. Note the rejected rolls with the word "rejected" next to the recorded weight in column 6.

## ARTICLE B
## FIBERGLASS SPRAY-UP ROVING AND FILAMENT WINDING ROVING

### M1B-100 INTRODUCTION

This Article specifies the minimum inspections and tests that are to be performed on fiberglass spray-up roving and filament winding roving that are to be used to fabricate equipment to this Standard.

### M1B-200 ACCEPTANCE INSPECTIONS

Acceptance inspections shall include inspection of the roving balls for proper packaging, identification, and contamination. This acceptance inspection is to be conducted on the unopened roll. Acceptance requirements and limits are as defined in para. M1B-410. Acceptance inspection shall include inspection of selected rolls for measurement of roving yield per ASQ Z1.4 criteria. Inspection for manufacturing imperfections shall be conducted during use of roving balls. Acceptance requirements and limits are as defined in paras. M1B-420 and M1B-430.

The form shown in Table M1B-1, or a similar form that contains the provisions to record the results of inspections, shall be used by the Fabricator and shall be retained in the inspection records. A separate form shall be used for each roving manufacturer, roving nomenclature, and roving yield.

In lieu of performing the above inspections, measurements, and documentation, the Fabricator shall provide the User or User's Agent with a Certificate of Compliance from the material manufacturer. This Certificate shall assure that materials were manufactured, inspected, and tested per the material supplier's specifications.

### M1B-300 EQUIPMENT AND MEASURING TOOLS

### M1B-310 Wrap Reel

A device may be used that provides a minimum of a 6 yard sample measured and cut under sufficient tension to keep the strand taut. Equipment such as standard 36 in. or 54 in. (1 yard or 1.5 yard) yarn reel with adjustable transverse, four skein capacity is suggested.



Copyright ASME International
Provided by IHS under license with ASME
No reproduction or networking permitted without license from IHS

Not for Resale

## TABLE M1B-1 ROVING REINFORCEMENT LOG SHEET

Fabricator's name _____

Address _____

_____

_____

Roving manufacturer _____

Roving nomenclature _____

Roving yield _____

QC file no. _____

| 1 Ball No. | 2 Reinforcement Production Date (if Given) | 3 Lot. No. [Note (1)] | 4 Packaging Inspection | | 5 Yield | 6 Property Inspection (Column 5) | | 7 Visual Inspection | |
|---|---|---|---|---|---|---|---|---|---|
| | | | By | Date | | By | Date | By | Date |
| 1 | | | | | | | | | |
| 2 | | | | | | | | | |
| 3 | | | | | | | | | |
| 4 | | | | | | | | | |
| 5 | | | | | | | | | |
| 6 | | | | | | | | | |
| 7 | | | | | | | | | |
| 8 | | | | | | | | | |

Comments on visual and packaging inspection (indicate which roll):

_____

_____

GENERAL NOTE: This form may be reproduced and used without written permission from ASME if used for purposes other than republication.

NOTE:
(1) Lot, batch, product code, or other label identification.



Copyright ASME International
Provided by IHS under license with ASME
No reproduction or networking permitted without license from IHS

Not for Resale

### M1B-320 Laboratory Balance

A laboratory balance that measures to 0.1 g is required.

## M1B-400 PROCEDURES AND ACCEPTANCE LIMITS

### M1B-410 Roving Identification and Package Inspection

The roving shall be packaged as shipped from the manufacturer's factory. The roving shall not be repackaged in the distribution of the material after the manufacturer has shipped the roving. Verify that the roving balls as identified by the manufacturer have the same nomenclature as the roving required by Part 2 and examine the packaging of the roving for damage that renders the roving unusable. Indicate acceptable roving by recording in Table M1B-1, column 4, the date and name of the person performing the examination.

For packaged rovings that are found to be acceptable for further inspection and tests, enter the reinforcement production date and lot number for each ball in Table M1B-1, columns 2 and 3.

### M1B-420 Visual Inspection of Roving

*(a)* The roving ball shall be visually inspected for imperfections and contamination prior to use by the Fabricator. Record the date and the inspector's name in Table M1B-1, column 7. If any roving ball is rejected, record the reason in the comments section in Table M1B-1.

*(b)* Roving balls having any of the following defects shall not be used for laminates made to this Standard:

*(1)* any package that exhibits foreign matter such as dirt, oil, grease, waste glass fiber, or beads of glass such that it would detract from the performance or appearance of the finished product;

*(2)* balls that have been contaminated by water.

### M1B-430 Measurement of Roving Yield

From one roving ball per shipment, obtain a minimum of a 6 yard sample (length *A*) of roving as required by para. M1B-310. Roving shall be pulled from the same side of the package as used in the Fabricator's process. If the roving is pulled from the outside of the package, sufficient material shall be removed and discarded so that the sample will be taken from undisturbed material. Remove the sample from the wrap reel. Double the sample several times and tie with a single knot. Using the balance required by para. M1B-320, weigh the sample to the nearest 0.1 g. Convert grams to ounces by multiplying grams by 0.0352. Two specimens from each package shall be measured and the average computed. Record as weight *A*.

Calculate the yield, yards/lb, using the following formula:

$$\text{yield, yards/lb} = \frac{16 \text{ oz/lb} \times \text{length } A}{\text{weight } A \text{ (oz)}} = \frac{96}{\text{weight } A \text{ (oz)}}$$

Enter the yield of acceptable and unacceptable balls of roving in Table M1B-1, column 5. If the yield of the ball of roving is outside the manufacturer's specification, the remaining balls in the shipment are to be inspected per ASQ Z1.4 criteria, following the procedure specified in para. M1B-430. Balls whose yield is outside the manufacturer's specification shall not be used for laminates made to this Standard. Note the rejected roving balls with the word "rejected" next to the yield in column 5. Also, record the date and name of the person performing the yield measurement in column 6.

# ARTICLE C
# FIBERGLASS WOVEN ROVING FABRIC, FIBERGLASS UNIDIRECTIONAL FABRIC, AND FIBERGLASS NONWOVEN BIAXIAL FABRIC

## M1C-100 INTRODUCTION

This Article specifies the minimum inspections and tests that are to be performed on the rolls of fiberglass woven roving fabric, fiberglass unidirectional fabric, and fiberglass nonwoven biaxial fabric that are to be used to fabricate equipment to this Standard.

## M1C-200 ACCEPTANCE INSPECTIONS

Acceptance inspections shall include inspection of all fabric rolls for proper packaging and identification, and contamination. This acceptance inspection is to be conducted on the unopened roll. Acceptance requirements and limits are as defined in para. M1C-410. Acceptance inspection shall include inspection of selected rolls for measurement of unit weight and verification of construction of fabric per ASQ Z1.4 criteria. Inspection for manufacturing imperfections shall be



Copyright ASME International
Provided by IHS under license with ASME
No reproduction or networking permitted without license from IHS
Not for Resale

conducted during use of rolled goods. Acceptance requirements and limits are as defined in paras. M1C-420 through M1C-450.

The form shown in Table M1C-1, or a similar form that contains the provisions to record the results of these required inspections, shall be used by the Fabricator and shall be retained in the inspection records. A separate form shall be used for each fabric manufacturer, fabric nomenclature, fabric unit weight (oz/sq yard), and fabric construction.

In lieu of performing the above inspections, measurements, and documentation, the Fabricator shall provide the User or User's Agent with a Certificate of Compliance from the material manufacturer. This Certificate shall assure that materials were manufactured, inspected, and tested per the material supplier's specifications.

## M1C-300 EQUIPMENT AND MEASURING TOOLS REQUIRED

### M1C-310 Inspection Table and Lights

An inspection table and adequate overhead lighting that are suitable for the inspection and testing of the fabric are required. The equipment used shall not introduce contamination to the fabric during inspection and testing.

### M1C-320 Linear Measuring, Marking, and Cutting Tools

*(a)* A standard linear measuring tool (longer than width of roll) that measures the roll widths with minimum accuracy of $\pm 1/8$ in. is required.

*(b)* A 3 in. $\pm 1/32$ in. square template is required.

*(c)* A fine-point felt-tip pen and scissors are required.

### M1C-330 Laboratory Balance

A laboratory balance that measures to 0.1 g is required.

## M1C-400 PROCEDURES AND ACCEPTANCE LIMITS

### M1C-410 Roll Identification and Package Inspection

The fabric shall be packaged as shipped from the manufacturer's factory. The fabric shall not be repackaged in the distribution of the material after the manufacturer has shipped the fabric. Verify that the fabric rolls as identified by the manufacturer have the same nomenclature as the fabric required by Part 2 and examine the packaging of the fabric for damage that renders the fabric unusable. Indicate acceptable rolls by recording the date and name of the person performing the examination in Table M1C-1, column 4.

For packaged rolls that are found to be acceptable for further inspection and tests, enter the fabric production date and lot number in Table M1C-1, columns 2 and 3.

### M1C-420 Visual Inspection of Fabric

*(a)* As fabric is used, it shall be visually inspected for imperfections and contaminations by the Fabricator. Record date and name of inspector in Table M1C-1, column 9. If a roll is rejected, record the reason under the comments section in Table M1C-1.

*(b)* Fabric shall be uniform in color, texture, and appearance. The following imperfections and/or contaminations shall be removed from fiberglass woven roving and fiberglass nonwoven biaxial fabric by making two parallel cuts across the width of the fabric and discarding the rectangular sections of fabric containing the following defects:

*(1)* dirt spots ($3/16$ in. to $3/4$ in. in diameter) in excess of one per 10 lineal feet (*dirt spots* are defined as all foreign matter, dirt, grease spots, etc.);

*(2)* missing ends for more than 2 consecutive feet in length;

*(3)* fuzz clumps or loops greater than 1 in. in height from the surface.

*(c)* Fiberglass woven and fiberglass nonwoven biaxial fabric having any of the following defects shall not be used for laminates made to this Standard:

*(1)* dirt spots in excess of $3/4$ in. in diameter (*dirt spots* are defined as all foreign matter, dirt, grease spots, etc.);

*(2)* more than 11 missing ends, either individual picks or any combination of individual and multiple (2, 3, 4, or 5) ends in any consecutive 100 lineal feet;

*(3)* fuzz clumps or loops that prevent the proper lay-down of the fabric and that cannot be easily removed;

*(4)* rolls that have been contaminated by water.

*(d)* Fiberglass unidirectional fabric shall be uniform in color, texture, and appearance. The following imperfections and/or contaminations shall be removed from the fabric by making two parallel cuts across the width of the fabric and discarding the rectangular sections of fabric containing the following defects:

*(1)* dirt spots ($3/16$ in. to $3/4$ in. in diameter) in



Copyright ASME International
Provided by IHS under license with ASME
No reproduction or networking permitted without license from IHS
Not for Resale

## TABLE M1C-1 FABRIC REINFORCEMENT LOG SHEET

Fabricator's name _____ Fabric manufacturer _____

Address _____ Fabric nomenclature _____

_____ Fabric weight _____

_____ QC file no. _____ Fabric construction _____

| 1 Roll No. | 2 Reinforcement Production Date (if Given) | 3 Lot. No. [Note (1)] | 4 Packaging Inspection | | 5 Width | 6 Weight | 7 Construction | 8 Property Inspection (Cols. 5, 6, and 7) | | 9 Visual Inspection | |
|---|---|---|---|---|---|---|---|---|---|---|---|
| | | | By | Date | | | | By | Date | By | Date |
| 1 | | | | | | | | | | | |
| 2 | | | | | | | | | | | |
| 3 | | | | | | | | | | | |
| 4 | | | | | | | | | | | |
| 5 | | | | | | | | | | | |
| 6 | | | | | | | | | | | |
| 7 | | | | | | | | | | | |
| 8 | | | | | | | | | | | |

Comments on visual and packaging inspection (indicate which roll):

_____

_____

GENERAL NOTE: This form may be reproduced and used without written permission from ASME if used for purposes other than republication.

NOTE:
(1) Lot, batch, product code, or other label identification.



--`,,`,,`-`-`,,`,,`,`,,`---

Copyright ASME International
Provided by IHS under license with ASME
No reproduction or networking permitted without license from IHS Not for Resale

excess of one per 10 lineal feet (*dirt spots* are defined as all foreign matter, dirt, grease spots, etc.);

*(2)* missing ends in any direction less than one per lineal foot;

*(3)* areas of the fabric less than 6 in. × 6 in. where rovings are disoriented or looped less than 1 in. in height from the surface. The number of these areas shall not exceed two per 5 lineal yards of fabric. If so, the roll shall not be used for laminates made to this Standard;

*(4)* weft tails exceeding 1 in. or less than $\frac{1}{8}$ in. in length;

*(5)* bias exceeding ±10 deg from 0 deg/180 deg in a warp (machine direction) product or from 90 deg/270 deg in a weft (fill direction) product.

*(e)* Fiberglass unidirectional fabric rolls having any of the following defects shall not be used for laminates made to this Standard:

*(1)* dirt spots in excess of $\frac{3}{4}$ in. in diameter (*dirt spots* are defined as all foreign matter, dirt, grease spots, etc.);

*(2)* missing ends in any direction more than one per lineal foot of fabric;

*(3)* areas of the fabric greater than 6 in. × 6 in. where rovings are disoriented or looped less than 1 in. in height from the surface;

*(4)* areas of the fabric where rovings are disoriented or looped greater than 1 in. in height from the surface;

*(5)* rolls that have been contaminated by water or other substances.

## M1C-430 Width Measure of Fabric

With the linear measuring tool given in para. M1C-320, measure the width of the fabric at least 1 yard from the beginning (leading) edge of the roll and at two additional positions at least 6 in. apart. Follow the manufacturer's definition for the width of the particular fabric (see note below). Measure to the nearest $\frac{1}{8}$ in. Average the three measurements and enter the measured width of acceptable and unacceptable rolls in the inspection form shown in Table M1C-1. Note the rejected rolls with the word "rejected" next to the width in column 5. Rolls with variations greater than $\pm\frac{1}{2}$ in. shall not be used in laminates made to this Standard.

Record the date and name of the person performing the width, weight, and construction measurements in column 8.

NOTE: Due to the methods of manufacturing fabrics, there are different ways of describing widths of fabrics.

## M1C-440 Weight per Square Yard of Fabric

Unroll the fabric on the inspection table and lay flat. Pull one fill pick from the sample or mark a line across the width of the fabric. Measure from the pulled pick or line using a 36 in. rule meeting the accuracy requirements of para. M1C-320. Pull another fill pick or mark off the 36 in. sample for cutting. Cut the 36 in. long sample across the width of the fabric using scissors. Measure the width of the fabric according to para. M1C-430. Weigh the sample to the nearest 0.1 g. Convert grams to ounces by multiplying grams by 0.0352. Calculate the weight per square yard in ounces per square yard using the following formula:

$$\frac{\text{weight, oz}}{\text{square yard}} = \frac{\text{36 in.}}{\text{square yard}} \times \frac{\text{sample weight, oz}}{\text{sample width, in.}}$$

Rolls whose weight per square yard are outside the manufacturer's specification shall not be used for laminates made to this Standard. Enter the weight per square yard of acceptable and unacceptable rolls in the inspection report shown in Table M1C-1. Note the rejected rolls with the word "rejected" next to the weight in column 6.

## M1C-450 Construction

Unroll the fabric on the inspection table and lay flat. Perform the verification of construction in an area at least 1 yard from the beginning of the roll and one-tenth of the width from the edge of the fabric. For example, on 60 in. material start at least 6 in. from one edge and 1 yard from the beginning of the fabric. Using the template required by para. M1C-320, measure a 3 in. square and count the number of warp strands (if applicable) to the nearest half strand in the section. Repeat this three times diagonally across the fabric. Add the total warp strands counted in the three 3 in. squares and divide by nine. This will give picks per inch in the warp of the fabric. Repeat for the fill (weft) strands if applicable. Rolls whose picks per inch in either warp or fill are outside the manufacturer's specification shall not be used for laminates made to this Standard. Enter the picks per inch in the warp and fill of acceptable and unacceptable rolls to the nearest 0.1 picks in Table M1C-1, column 7.



Copyright ASME International
Provided by IHS under license with ASME
No reproduction or networking permitted without license from IHS

Not for Resale

# ARTICLE D
# FIBERGLASS MILLED FIBERS

## M1D-100 INTRODUCTION

This Article specifies the minimum inspections and tests that are to be performed on the packages of fiberglass milled fiber that are to be used to fabricate equipment to this Standard.

## M1D-200 ACCEPTANCE INSPECTIONS

Acceptance inspections shall include inspection of the milled fiber for proper packaging and identification, and visual inspection for contamination. Acceptance requirements and limits are defined in paras. M1D-410 and M1D-420(a).

The form shown in Table M1D-1, or a similar form that contains the provisions to record the results of these required inspections, shall be used by the Fabricator and shall be retained in the inspection records. A separate form shall be used for each milled fiber manufacturer, milled fiber nomenclature, and milled fiber length.

## M1D-300 EQUIPMENT REQUIRED

An inspection table and adequate overhead lighting that are suitable for the inspection of the milled fiber are required. The equipment used must not introduce contamination to the milled fiber during inspection.

## M1D-400 PROCEDURES AND ACCEPTANCE LIMITS

### M1D-410 Package Identification and Inspection

The milled fiber shall be packaged as shipped from the manufacturer's factory. The milled fiber shall not be repackaged in the distribution of the material after the manufacturer has shipped the milled fiber. Verify that the milled fiber as identified by the manufacturer has the same nomenclature as the milled fiber required by Part 2 and examine each package of milled fiber for damage that renders it unusable. Indicate acceptable milled fibers by recording date and name of the person performing the examination in Table M1D-1, column 4.

For packaged milled fiber that is found to be acceptable for further inspection, enter the reinforcement production date and lot number for each package of milled fibers used in Table M1D-1, columns 2 and 3.

### M1D-420 Visual Inspection of Milled Fiber

*(a)* As milled fiber is used, it shall be visually inspected for contamination by the Fabricator. Record the date and the inspector's name in Table M1D-1, column 5.

*(b)* Packages having contamination of the milled fiber evident in the form of water, oil, grease, or clumping together shall be rejected.

*(c)* Record the results of the visual inspection of each package of milled fiber in the inspection report.



Copyright ASME International
Provided by IHS under license with ASME
No reproduction or networking permitted without license from IHS
Not for Resale

## TABLE M1D-1 MILLED FIBER REINFORCEMENT LOG SHEET

Fabricator's name _____

Address _____

_____

_____

Fiber manufacturer _____

Fiber nomenclature _____

Fiber length _____

QC file no. _____

| 1<br>Package No. | 2<br>Reinforcement Production Date (if Given) | 3<br>Lot. No. [Note (1)] | 4<br>Packaging Inspection | | 5<br>Visual Inspection | |
|---|---|---|---|---|---|---|
| | | | By | Date | By | Date |
| 1 | | | | | | |
| 2 | | | | | | |
| 3 | | | | | | |
| 4 | | | | | | |
| 5 | | | | | | |
| 6 | | | | | | |
| 7 | | | | | | |
| 8 | | | | | | |

Comments on visual and packaging inspection (indicate which package):

_____

_____

GENERAL NOTE: This form may be reproduced and used without written permission from ASME if used for purposes other than republication.

NOTE:
(1) Lot, batch, product code, or other label identification.



--`,,`,`,,`-`-`,,`,,`,`,,`---

Copyright ASME International
Provided by IHS under license with ASME
No reproduction or networking permitted without license from IHS

Not for Resale

# MANDATORY APPENDIX M-2
# MATRIX MATERIALS RECEIVING PROCEDURES

## M2-100 INTRODUCTION

This Appendix's Articles A (Visual Inspection Requirements), B (Specific Gravity), C (Viscosity, Gardner–Holdt Method), D (Viscosity, Brookfield Method), and E (Room Temperature Gel Time) specify the minimum requirements for the inspections and tests that are to be performed by the Fabricator personnel or an independent testing laboratory on resins and curing agents (curing agents include accelerators, promoters, and peroxides as required for specific resins systems). These inspections are to be performed on one random sample from each lot or batch of material received from a supplier. If any containers or packages are damaged, then the contents of each damaged container shall be inspected. The requirements of this Appendix are to be accomplished prior to acceptance of resins and curing agents for fabrication of equipment to this Standard. These requirements shall help assure that the resins and curing agents are correctly identified; meet the manufacturer's specification; and are suitable for proper fabrication, curing practice, and design requirements of equipment fabricated to this Standard.

## M2-200 SAFETY

See Material Safety Data Sheets for materials to be used.

## ARTICLE A
## VISUAL INSPECTION REQUIREMENTS

## M2A-100 INTRODUCTION

This Article specifies the steps that shall be followed when inspecting resins and curing agents that are to be used to fabricate vessels to this Standard.

## M2A-200 REQUIREMENTS

*(a)* Resins, before use, shall comply with the following.

*(1)* They shall be checked to assure they are the products ordered.

*(2)* They shall have proper labeling for the specified product, including the manufacturer's product name and identifying number.

*(3)* A sample shall be of normal color and clarity for the specific resin, free from solid or gelled particles and dirt as determined by visual examination.

*(4)* They shall be within the manufacturer's specification limits for specific gravity, viscosity, and room temperature gel time as determined by the test methods of Articles B through E.

*(5)* Results of visual examinations and specific tests shall be recorded on the Resin Log Sheet, Table M2F-1.

*(b)* Curing agents, before use, shall comply with the following.

*(1)* They shall be checked to assure they are the products ordered.

*(2)* They shall have proper labeling for the specified product, including the manufacturer's product name and identifying number.

*(3)* They shall have no layering or separation into two or more phases.

**CAUTION: Layering or separation presents potential hazard; contact supplier immediately at emergency telephone numbers shown on the Curing Agents Log Sheet for instructions if layering is observed.**

*(4)* In the case of liquids, they shall be free of sediment or suspended solids.

*(5)* They shall have proper curing activity as defined by the Fabricator's process and/or manufacturer's specification, as determined by the room temperature gel time test (see Article E).

*(6)* Results of visual examination and gel time testing shall be recorded on the Curing Agents Log Sheet, Table M2F-2.



Copyright ASME International
Provided by IHS under license with ASME
No reproduction or networking permitted without license from IHS
Not for Resale

### M2A-300 ACCEPTANCE CRITERIA

Materials failing visual inspection criteria or failing to meet the manufacturer's specifications in any prescribed test shall not be used unless:

*(a)* in consultation with the manufacturer's QC contact (shown on log sheet), corrective sampling procedures are undertaken that result in the material passing visual examination; and

*(b)* test result differences are shown, by retest, to be caused by procedural differences in testing rather than by differences in quality of materials.

## ARTICLE B
## SPECIFIC GRAVITY

### M2B-100 INTRODUCTION

This Article specifies the procedure that shall be used to determine the specific gravity. This is accomplished by weighing a standard volume of liquid at a specific temperature and converting this weight to specific gravity.

### M2B-200 APPARATUS

The following apparatus is required:

*(a)* laboratory balance (0.1 g sensitivity);

*(b)* weight per gallon cup (water capacity 83.3 ml) with lid (Gardner catalog No. CG 9652 or equivalent);

*(c)* thermometer (ASTM No. 17C).

### M2B-300 PROCEDURE

*(a)* Precondition the resin sample and weight per gallon cup for 20 min at 25°C ±0.1°C. Insert the cup and the resin sample separately in a large beaker. Place in a 25°C water bath.

*(b)* Tare weigh the empty cup and lid to ±0.1 g.

*(c)* Fill the cup to the brim with bubble-free resin.

*(d)* Place the cover on the cup and force it down to seat fully.

*(e)* Wipe the cup clean on the outside.

*(f)* Weigh the filled cup to ±0.1 g.

### M2B-400 CALCULATIONS

$$\text{weight, lb/gal} = \frac{\text{weight of full cup, g} - \text{tare weight, g}}{10}$$

$$\text{specific gravity} = \frac{\text{weight, lb/gal}}{8.33}$$

### M2B-500 REPORT

Record specific gravity on the Resin Log Sheet, Table M2F-1.

## ARTICLE C
## VISCOSITY, GARDNER–HOLDT METHOD

### M2C-100 INTRODUCTION

This Article specifies the preferred procedure for determining the viscosity of nonthixotropic resins. The Gardner–Holdt method is based on the rate a "bubble" rises throughout the liquid resin under controlled conditions. The method determines viscosity in bubble seconds. Above 2.65 bubble seconds, the readings are approximately equal to stokes. This method is not suitable for thixotropic resins; the Brookfield method defined in Article D shall be used for thixotropic resins.

Two variations of the method are the Comparison Method and the Timing Method.

*(a)* The Comparison Method is required for kinematic viscosities below 6 stokes. The rate of bubble rise is compared with rate of rise in Gardner–Holdt numerical standard tubes.

*(b)* The Timing Method is suitable for kinematic viscosities of 6 stokes and above, and interchangeable with the Comparison Method in this viscosity range.

### M2C-200 APPARATUS

*(a)* Constant temperature bath, 25°C ±0.1°C, with water as the bath medium. The bath shall be equipped with ASTM No. 23C thermometer for monitoring bath temperature.

*(b)* Viscosity tubes, having clear glass and flat bottoms, 10.65 mm ±0.025 mm inside diameter, and 114 mm ±1 mm outside length. Plainly legible lines are to be located as follows:

*(1)* 27 mm ±0.5 mm from the outside bottom of the tube;



Copyright ASME International
Provided by IHS under license with ASME
No reproduction or networking permitted without license from IHS
Not for Resale

*(2)* 100 mm ±0.5 mm from the outside bottom of the tube;

*(3)* 108 mm ±0.5 mm from the outside bottom of the tube.

The distance between lines (1) and (2) above shall be 73 mm ±0.5 mm.

*(c)* Gardner–Holdt references standards, consisting of a series of standard viscosity tubes filled with transparent liquids having predetermined kinematic viscosities in ranges of 0.10 stokes to 1,000 stokes and bubble seconds as shown in Table M2C-1.

NOTE: The series of standards is spaced in logarithmically even increments of about 26%, log 1.260 – 0.1000. The increments are marked numerically as shown in Table M2C-1. Since above 2.65 the values are approximately equal to stokes, results will be reported in stokes for most resins.

*(d)* Timing device in the form of a timing clock calibrated in units of 0.1 sec.

*(e)* Inverting rack, capable of inverting three or more viscosity tubes 180 deg to within 1 deg of vertical position while rack and tubes are immersed in the constant temperature bath.

*(f)* Viscosity tube corks, No. 2 short.

## M2C-300 PREPARATION OF SAMPLES

All samples are transferred to a viscosity tube to approximately level with the top of the 108 mm line. Immediately transfer the tube to the 25°C water bath with cork loosely inserted and hold at this temperature for 10 min.

## M2C-400 PROCEDURE BY THE COMPARISON METHOD

*(a)* Immediately following the 10 min hold time, level off the material so that the bottom of the meniscus is level with the 100 mm line. Insert the cork so that the bottom of the cork is level with the 108 mm line. This will assure a bubble of suitable and uniform size.

*(b)* Insert the tube in the rack with the proper standard tubes and immerse with the cork down in the 25°C constant temperature bath. Allow the tube to stand in the bath a minimum of 20 min before reading the viscosity [see (c) below].

*(c)* To read the viscosity, invert the rack and compare the rate of bubble rise of the sample bubble to those of the standards. The tubes must remain in the exact vertical position.

*(d)* The tube number is equivalent to the kinematic viscosity in stokes.

## M2C-500 PROCEDURE BY THE TIME METHOD (Greater Than 6 Stokes)

*(a)* Adjust the size of the bubble as in para. M2C-400(a).

*(b)* Insert the tube in the rack with the cork down and immerse in the 25°C constant temperature bath. Allow the tube to stand in the bath a minimum of 20 min before reading the viscosity.

*(c)* Invert the tube quickly and determine the time required for the bubble to rise in seconds. The tube must be in the exact vertical position. Start the timing device when the top of the bubble becomes tangent to the 27 mm line on the tube. Stop the timing device when the top of the bubble becomes tangent to the 100 mm line. This gives a 73 mm timed bubble travel.

*(d)* Bubble seconds are equivalent to kinematic viscosity in stokes.

## M2C-600 CALCULATIONS

Convert kinematic viscosity in stokes to viscosity in centipoise as follows:

$$\text{stokes} = \frac{\text{poise}}{\text{specific gravity}}$$

$$\text{centipoise} = \text{stokes} \times \text{specific gravity} \times 100$$

## M2C-700 REPORT

Record viscosity in centipoise on the Resin Log Sheet, Table M2F-1.

# ARTICLE D
# VISCOSITY, BROOKFIELD METHOD

## M2D-100 INTRODUCTION

The Brookfield method determines the viscosity and thixotropic index of a resin using a Brookfield viscometer. It is applicable for both thixotropic and nonthixotropic resins. However, because close control of resin temperature and careful maintenance of the Brookfield viscometer are required to obtain accurate viscosity values, the Gardner–Holdt method defined in Article C is preferred for nonthixotropic resins.



Copyright ASME International
Provided by IHS under license with ASME
No reproduction or networking permitted without license from IHS
Not for Resale

## TABLE M2C-1 RECOMMENDED NUMERICAL STANDARDS FOR COMPARATOR VISCOSITY TUBES

| Bubble Seconds [Note (1)] | Tube Number | Stokes | Gardner-Holdt Letter | Tube Number | Stokes | Gardner-Holdt Letter |
|---|---|---|---|---|---|---|
| | | 0.10 | | 10 | 10 | |
| | | | | | | W |
| | | 0.13 | | 13 | 13 | X |
| | | | A3 | | | |
| | | 0.16 | | 16 | 16 | |
| | | | | | | Y |
| | | 0.20 | | 20 | 20 | |
| 0.75 | 0.22 | | A2 | | | |
| | | | | | | Z |
| | | 0.25 | | 25 | 25 | |
| | | | | | | Z1 |
| 0.81 | 0.34 | 0.32 | A1 | 32 | 32 | |
| | | | | | | Z2 |
| | | 0.40 | | 40 | 40 | |
| 0.90 | 0.50 | 0.50 | A | 50 | 50 | Z3 |
| | | 0.63 | | 63 | 63 | |
| 1.00 | 0.68 | | B | | | Z4 |
| | | 0.80 | | 80 | 80 | |
| | | | C | | | |
| 1.15 | 0.92 | | | | | |
| | | 1.00 | D | 100 | 100 | Z5 |
| 1.30 | 1.15 | | | | | |
| | | 1.25 | E | 125 | 125 | |
| | | | F | | | |
| 1.55 | 1.45 | 1.60 | | 160 | 160 | Z6 |
| | | | G | | | |
| 1.85 | 1.80 | | | | | |
| | | 2.00 | H | 200 | 200 | |
| 2.20 | 2.15 | | | | | |
| | | | I | | | |
| | | 2.50 | J | 250 | 250 | |
| 2.65 | 2.65 | | | | | |
| [Note (2)] | [Note (2)] | | K | | | |
| | | | L | | | |
| 3.20 | 3.20 | 3.20 | M | 320 | 320 | |
| | | | N | | | |
| | | | O | | | |
| 4.00 | 4.00 | 4.00 | P | 400 | 400 | Z7 |
| | | | Q | | | |
| | | | R | | | |
| 5.00 | 5.00 | 5.00 | S | 500 | 500 | |
| | | | T | | | |
| 6.30 | 6.30 | 6.30 | U | 630 | 630 | Z8 |
| 8.00 | 8.00 | 8.00 | | 800 | 800 | |
| | | | V | | | Z9 |
| 10.0 | 10.0 | 10.0 | | 1000 | 1000 | |
| | | | | | | Z10 |

GENERAL NOTE: Table is arranged to show relationship between stokes, bubble seconds, and Gardner-Holdt letters. Stokes are shown in logarithmic progression.

NOTES:

(1) The bubble time, in seconds, of the numerical tubes under 4 sec was determined by a technique employing a movie camera.

(2) Above 2.65 sec, the bubble seconds as measured by the kinematic method are approximately equivalent for most products. Below 2.65 sec, this relationship does not hold.



--`,,,``,,-`-`,,`,,`,`,,`---

Copyright ASME International
Provided by IHS under license with ASME
No reproduction or networking permitted without license from IHS

Not for Resale

## M2D-200 APPARATUS

The following apparatus is required:

*(a)* Brookfield viscometer model LVF (calibrated via manufacturer's directions)

*(b)* 250 ml polypropylene beakers

*(c)* constant temperature water bath at 25°C ±0.1°C

*(d)* thermometer (ASTM No. 17C)

*(e)* stainless steel spatula

*(f)* timer, reading in 0.1 min

## M2D-300 PROCEDURE FOR TEMPERATURE ADJUSTMENT

*(a)* Fill beaker with material to be tested.

*(b)* Immerse covered beaker in agitated 25°C water bath and allow to come to temperature, 25°C ±0.1°C. The temperature adjustment may be hastened by spatula agitation of the sample (avoid air entrapment).

*(c)* Check temperature using Saybolt thermometer.

## M2D-400 PROCEDURE FOR THIXOTROPIC RESINS

*(a)* Agitate the resin with a spatula for 1 min at a rate of 120 RPM without entrapment of air, replace cover on beaker, allow to stand for 5 min ±0.1 min.

*(b)* Level Brookfield viscometer, attach spindle and guard as designated by resin manufacturer.

*(c)* Remove beaker from bath, place open beaker in position under Brookfield viscometer, center and immerse spindle to middle of the notch.

*(d)* Set speed to 6 RPM, start Brookfield viscometer and timer. After 1 min, increase speed to 60 RPM. At 2 min on timer, stop viscometer and read. Reduce speed to 6 RPM and take final reading 1 min after restarting. Record the 60 RPM and 6 RPM values.

*(e)* Repeat steps (a) through (d) above for second reading at each spindle speed.

## M2D-500 PROCEDURE FOR NONTHIXOTROPIC RESINS

*(a)* Level Brookfield viscometer, attach spindle and guard as designated by resin manufacturer.

*(b)* Remove beaker from bath, place open beaker in position under Brookfield viscometer, center and immerse spindle to middle of the notch.

*(c)* Run viscosity at 60 RPM for 1 min with a spindle chosen so that the Brookfield pointer falls approximately in the midrange of the recording dial. Alternatively, run at RPM and spindle recommended by resin manufacturer. Record the value.

*(d)* Repeat steps (a) through (c) above for second result. **(00)**

## M2D-600 CALCULATIONS

*(a)* Determine viscosity by multiplying the values obtained in paras. M2D-400 and M2D-500 with the Brookfield constant for the particular spindle number and RPM used to obtain the value.

*(b)* If the two results for a particular spindle and speed do not agree within ±50 centipoise, repeat the test.

*(c)* Determine thixotropic index as viscosity at 6 RPM divided by viscosity at 60 RPM.

## M2D-700 REPORT

Report the following on the Resin Log Sheet, Table M2F-1:

*(a)* Brookfield viscometer spindle and speed;

*(b)* viscosity in centipoise at 25°C average of two trials at both 6 RPM and 60 RPM.

# ARTICLE E
# ROOM TEMPERATURE GEL TIME

## M2E-100 INTRODUCTION

This Article specifies the procedure that shall be used to determine the room temperature (25°C) gel time of resins that have been properly mixed with correctly proportioned amounts of accelerator, promoter, and peroxide curing agents.

## M2E-200 APPARATUS

The following apparatus is required:

*(a)* constant temperature water bath at 25°C ±0.1°C

*(b)* polypropylene graduated beaker, 250 ml

*(c)* stainless steel spatulas

*(d)* laboratory timer, calibrated in units of 0.1 min

*(e)* laboratory balance (0.1 g sensitivity)

*(f)* graduated syringes, delivery 0.1 ml to 3.0 ml ±0.01 ml

*(g)* thermometer (ASTM No. 17C)

## M2E-300 PROCEDURE

*(a)* Place 100 g of resin to be tested into a clean



Copyright ASME International
Provided by IHS under license with ASME
No reproduction or networking permitted without license from IHS
Not for Resale

250 ml polypropylene beaker. Place charged beaker in the constant temperature bath previously set at 25°C ±0.1°C for a minimum of 20 min until the resin in the beaker is stabilized throughout at 25°C ±0.5°C.

*(b)* Add controlled promoters and/or accelerators individually, stirring with the metal spatula between each addition until they are thoroughly dispersed (1 min for each addition). The quantities and precision of amounts are to be as specified by the resin supplier.

NOTE: It is recommended that wooden tongue depressors not be used, since they will absorb curing components and may also leach undesirable contaminants into the resin solution.

*(c)* After addition of the promoters and accelerators, allow the resin to rest in the control temperature bath. When enough of the entrapped air from stirring has left the sample to allow visual examination, check the sample for good dispersion, particularly of cobalt additives. Any signs of striations or strings of the cobalt will require remixing.

*(d)* Add the required concentration of the peroxide catalyst and mix vigorously with a clean metal spatula for 1 min. Start the timer simultaneously with the start of mixing.

**WARNING: Peroxides will react violently if placed in direct contact with metallic promoters or organic accelerators. Extreme care must be taken to avoid this. Refer carefully to peroxide manufacturer's instructions and Appendix NM-3 for safe handling of these materials.**

*(e)* Return the polypropylene beaker with the remaining resin to the constant temperature bath. Periodically probe the resin solution with the spatula until such time that the resin turns very thick and will "snap" or break evenly when the probe is lifted from the resin. When the snap occurs, stop the timer and record the time lapse as "gel time."

### M2E-400 REPORT

Record the room temperature (25°C) gel time on the Resin Log Sheet, Table M2F-1.

## ARTICLE F
## RESIN AND CURING AGENTS LOG SHEETS

See Tables M2F-1 and M2F-2 for the Resin and Curing Agents Log Sheets.

## ARTICLE G
## COMMON ADDITIVES

### M2G-100 INTRODUCTION

This Article specifies the minimum inspections by the Fabricator that must be performed prior to the acceptance and use of any of the common additives in the resin.

### M2G-200 DEFINITION AND LIMITS

#### M2G-210 Thixotropic Agents

Thixotropic agents are flame-processed silicon dioxides that are used to adjust the resin flow characteristics. The laminating resin shall contain *not* more than 1.5 parts per 100 parts resin by weight.

#### M2G-220 Flame Retardant Synergists

Flame retardant synergists are antimony oxides that are added to halogenated resins to enhance their measured flame retardant characteristics when measured per ASTM E 84. The laminating resin shall not contain more than 5 parts antimony oxide per 100 parts resin by weight. When predispersed concentrates are used, the laminating resin shall contain not more than 5 parts active antimony oxide by weight. No more than 10 parts of the predispersed concentrate per 100 parts resin by weight is permissible.

#### M2G-230 Ultraviolet Light Absorbers

Ultraviolet light absorbers are organic compounds that, by converting photochemical energy to thermal energy, effectively stabilize resin binders against the deteriorating effects of ultraviolet light. Only the outer surface resin-rich layer may contain the ultraviolet light absorber.

#### M2G-240 Pigments

Pigments are compounds that provide coloration and/or opacity. Only the outer surface resin-rich layer may contain pigment.

### M2G-300 ACCEPTANCE INSPECTION

*(a)* The package for each of the common additives shall be inspected at the time of delivery. Acceptance requirements are defined in para. M2G-400.

*(b)* The form shown in Table M2G-1, or a similar



Copyright ASME International
Provided by IHS under license with ASME
No reproduction or networking permitted without license from IHS

Not for Resale

## TABLE M2F-1 RESIN LOG SHEET

Manufacturer _____ QC Contact _____

Resin _____ Address _____

Spindle no. _____ Telephone no. _____

Emergency telephone no. _____

| Date | Lot No. | Gel Time @ 25°C (Minutes) | Viscosity @ 25°C (cps) | | Specific Gravity @ 25°C | Visual Examination |
|---|---|---|---|---|---|---|
| | | | @ 60 rpm | @ 6 rpm | | |
| | | | | | | |
| | | | | | | |
| | | | | | | |
| | | | | | | |
| | | | | | | |
| | | | | | | |
| | | | | | | |
| | | | | | | |
| | | | | | | |
| | | | | | | |
| | | | | | | |
| | | | | | | |
| | | | | | | |
| | | | | | | |
| | | | | | | |
| | | | | | | |
| | | | | | | |
| | | | | | | |
| Manufacturer's Specification: | | | | | | |

GENERAL NOTE: This form may be reproduced and used without written permission from ASME if used for purposes other than republication.



Copyright ASME International
Provided by IHS under license with ASME
No reproduction or networking permitted without license from IHS Not for Resale

## TABLE M2F-2 CURING AGENTS LOG SHEET

Manufacturer _____ QC contact _____

Curing agent _____ Address _____

Standard resin _____ Telephone no. _____

Emergency telephone no. _____

| Date | Lot No. | Gel Time @ 25°C (Minutes) | Visual Examination |
|---|---|---|---|
| | | | |
| | | | |
| | | | |
| | | | |
| | | | |
| | | | |
| | | | |
| | | | |
| | | | |
| | | | |
| | | | |
| | | | |
| | | | |
| | | | |
| | | | |
| | | | |
| | | | |

GENERAL NOTE: This form may be reproduced and used without written permission from ASME if used for purposes other than republication.



Copyright ASME International
Provided by IHS under license with ASME
No reproduction or networking permitted without license from IHS
Not for Resale

## TABLE M2G-1 COMMON ADDITIVES LOG SHEET

| | Raw Materials Inspection | Inspector | Date |
|---|---|---|---|
| Manufacturer<br>Product Name<br>Lot Number<br>Additive Purpose | As Received | | |
| | In Use Quality Problems | | |
| Manufacturer<br>Product Name<br>Lot Number<br>Additive Purpose | As Received | | |
| | In Use Quality Problems | | |
| Manufacturer<br>Product Name<br>Lot Number<br>Additive Purpose | As Received | | |
| | In Use Quality Problems | | |
| Manufacturer<br>Product Name<br>Lot Number<br>Additive Purpose | As Received | | |
| | In Use Quality Problems | | |

GENERAL NOTE: This form may be reproduced and used without written permission from ASME if used for purposes other than republication.



Copyright ASME International
Provided by IHS under license with ASME
No reproduction or networking permitted without license from IHS
Not for Resale

form that contains the provisions to record the results of these required inspections, shall be used by the Fabricator and shall be retained in the inspection records.

## M2G-400 ACCEPTANCE CRITERIA

*(a)* The primary package shall be clearly labeled by the additive manufacturer to identify the contained product by manufacturer, name, and lot number.

The primary container shall be free from damage (breakage, tear, or puncture). There shall be no visible sign that any part of the primary container wall has at any time been saturated with a liquid such as water.

*(b)* For additives found to be acceptable, the Fabricator must list the manufacturer's name, product name, product lot number, and purpose of additive on the inspection form. In the space next to "As Received," the inspector will sign his or her name and record the date.

## M2G-500 INSPECTION IN USE

At the time of use, additives shall be visually inspected for contamination. Solid contaminants may be removed and discarded. Any portion of a product which has been agglomerated by exposure to a liquid contaminant must be removed and discarded before the remainder can be added to a resin.

When contamination is found, the Fabricator must enter the date, describe the condition, and initial the entry on the original Common Additives Log Sheet (see Table M2G-1).



Copyright ASME International
Provided by IHS under license with ASME
No reproduction or networking permitted without license from IHS
Not for Resale

# MANDATORY APPENDIX M-3
# CALCULATION OF PHYSICAL AND MECHANICAL PROPERTIES USING LAMINATION ANALYSIS METHOD

## M3-100 SCOPE

This Appendix sets forth the Lamination Analysis Method to be used to calculate the laminate properties needed for design.

The Lamination Analysis Method consists of determining the physical and mechanical properties of each layer of a laminate and using weighted averaging techniques to determine the physical and mechanical properties of the total laminate.

Direct calculation of laminate properties according to para. M3-400 is required for Subpart 3B design. However, the extensive calculations required for Subpart 3B are not necessary for Subpart 3A and they would limit its usefulness. Paragraphs M3-200 and M3-300 present a shorter method that may be used with Subpart 3A design rules instead of the equations in para. M3-400.

The equations defining the theory of failure for use with Subpart 3B design are given in para. M3-500. They give rules for calculating the strength ratio $R$ at a point, from the stiffness coefficients and the resultant forces and moments at the point.

The elastic properties of oriented and random glass fiber reinforced layers have been calculated from the theory of composite micromechanics and are presented here in a graphical form for convenience.

Elastic interactions between extension and shear have been included in the graphical data; however, other elastic interactions between layers cannot be taken into account with this simplified approach. In practice, this means the graphical data is accurate for laminates containing both $+\theta$ and $-\theta$ layers, but the data is not accurate for a single oriented layer unless the orientation angle is either 0 deg or 90 deg. Also, the graphical data does not account for elastic interaction between bending and extension or bending and shear. If the laminate does not comply with these limitations, this simplified design method shall not be used.

## M3-200 LAMINATION ANALYSIS METHOD

The following formulas shall be used to calculate the physical and mechanical properties of laminates.

$$V_k = K/(144 t_k D_f) \tag{1}$$

$$D_k = V_k D_f + (1 - V_k) D_r \tag{2}$$

$$\bar{z} = \sum_{k=1}^{N} E_k t_k z_k \Big/ \sum_{k=1}^{N} E_k t_k \tag{3}$$

$$I_k = t_k^3/12 + t_k(\bar{z} - z_k)^2 \tag{4}$$

$$\text{Apparent tensile modulus} = \sum_{k=1}^{N} E_k t_k / t \tag{5}$$

$$\text{Apparent flexural modulus} = \sum_{k=1}^{N} E_k I_k \Big/ \sum_{k=1}^{N} I_k \tag{6}$$

$$\text{Apparent shear modulus} = \sum_{k=1}^{N} G_k t_k / t \tag{7}$$

$$\text{Apparent Poisson's ratio} = \sum_{k=1}^{N} E_k t_k \nu_k \Big/ \sum_{k=1}^{N} E_k t_k \tag{8}$$

where

$D$ = density, lb/cu in.
$E_k$ = tensile modulus of layer $k$, psi
$G_k$ = in-plane shear modulus of layer $k$, psi
$I_k$ = area moment of inertia, in.$^4$, about the neutral axis of a unit width of layer $k$
$K$ = fiber weight per unit area, lb/sq ft
$V$ = fiber volume fraction, decimal form
$t$ = total laminate thickness, in.
$t_k$ = thickness of layer $k$, in.
$\bar{z}$ = distance from reference plane to the neutral axis of the laminate (see Fig. M3-16), in.
$z_k$ = distance from reference plane to the centroid of layer $k$ (see Fig. M3-16), in.
$\nu_k$ = Poisson's ratio of layer $k$
$f$ = subscript denoting fiber
$r$ = subscript denoting resin
$k$ = subscript denoting layer number

The volume fraction of glass fiber or the thickness for each layer of the laminate is calculated using Eq.



Copyright ASME International
Provided by IHS under license with ASME
No reproduction or networking permitted without license from IHS
Not for Resale

(1). If the laminate exists, the layer thicknesses are measured microscopically from the edge of a sample. If the laminate does not physically exist, then either the glass content or thickness is assumed and the corresponding value calculated. All laminates designed on the basis of this initial assumption must be checked after fabrication to confirm the assumed value.

The glass fiber volume fraction, orientation, and the resin modulus at the operating temperature are then used to determine the mechanical properties of the layer from the appropriate graphs (see Figs. M3-1 through M3-13).

The physical and mechanical properties of the layers are tabulated, and the apparent properties of the laminate are calculated using the weighted averaging methods indicated by Eqs. (5) through (8). These methods are illustrated in para. M3-300.

## M3-300 ANALYSIS EXAMPLE

To illustrate the Lamination Analysis Method, assume a laminate construction of *VMM* $[+/-54]_3$ *MRM*. The layer of surfacing veil *V* is 0.11 oz/sq ft glass fiber veil, and the mat layers *M* are 1.5 oz/sq ft chopped strand mat. The filament wound layer $[+/-54]_3$ consists of three wind pattern closures with a wind angle of 54 deg relative to the mandrel axis, using 225 yard/lb roving and with a roving spacing of 8 strands per inch of band width. The woven roving layer *R* consists of 24 oz/sq yard fabric with a 5 × 4 weave style. The glass fiber used is E glass with a density $D_f$ of 0.0943 lb/cu in., and the resin density $D_r$ is 0.0468 lb/cu in. The tensile modulus of the matrix at the operating temperature is 400,000 psi.

*(a) Layer Physical Properties.* The glass fiber content per square foot *K* is calculated as follows for each layer of the laminate.

| Layer | *K*, lb/sq ft |
|---|---|
| *V* | 0.11/16 = 0.0069 |
| *MM* | 2 × 1.5/16 = 0.1875 |
| $[+/-54]_3$ | 3 × 2 × 8 × 12/(225 × 3) = 0.8533* |
| *M* | 1.5/16 = 0.0937 |
| *R* | 24/(16 × 9) = 0.1667 |
| *M* | 1.5/16 = 0.0937 |

*Three closures, two layers/closure, 8 × 12 strands/ft of band width, 225 × 3 ft/lb of roving yield.

Using Eqs. (1) and (2), calculate the glass volume fraction and density of each layer. Results are given in Table M3-1.

*(b) Laminate Physical Properties*

*(1)* total thickness = 0.351 in.

*(2)* total glass content = 1.4019 lb/sq ft

*(3)* laminate density = 0.0212/0.351 = 0.0604 lb/cu in.

*(4)* laminate weight = 0.0212 × 144 = 3.053 lb/sq ft

*(5)* glass content by weight = (1.4019/3.05) × 100% = 46%

*(c) Layer Mechanical Properties.* Using the matrix modulus, the glass volume percent, and the orientation of the glass fiber for each layer, the corresponding tensile modulus, in-plane shear modulus, and Poisson's ratios are obtained from the appropriate graphs (Figs. M3-1 through M3-13). For layers with oriented glass fiber, the two modulus values and Poisson's ratio are obtained for each of the two principal directions of the layer ($\theta$ for the axial direction and 90 − $\theta$ for the hoop direction).

The distance *z* between the reference plane and the centroid of each layer is calculated from the layer thicknesses (refer to Fig. M3-16).

The woven roving layer is modeled as two layers oriented at 0 deg and 90 deg. The thickness of these two layers is proportioned with respect to the weave style ($^5/_9$ for axial and $^4/_9$ for hoop). However, the distance *z* between the reference plane and the centroid of this layer is taken to the centroid of the total layer to prevent an unbalanced calculation of the flexural properties.

The layer properties are listed in Table M3-2 and the products of these values, as required in Eqs. (5) through (8), are listed in Table M3-3. Using Eqs. (3) through (8), the laminate properties are calculated; they are listed in Table M3-4.

## M3-400 STIFFNESS COEFFICIENTS FOR DESIGN BY SUBPART 3B RULES

This paragraph gives the equations required for calculating the stiffness coefficients needed to design cylindrical vessel parts constructed of Type X laminates, according to Subpart 3B design rules. Type X laminates are defined in Subpart 2B.

Other valid statements of lamination analysis may be used in place of the equations herein, but it is the responsibility of the registered engineer to show that they can be mathematically derived from the equations herein.

### M3-410 Nomenclature

The symbols used in para. M3-400 are defined below.

$A_{ij}$ = extensional stiffness coefficients defined by Eq. (26); $i, j = 1, 2, 6$



Copyright ASME International
Provided by IHS under license with ASME
No reproduction or networking permitted without license from IHS
Not for Resale

$B_{ij}$ = coupling stiffness coefficients defined by Eq. (27); $i, j = 1, 2, 6$

$D_{ij}$ = bending stiffness coefficients defined by Eq. (28); $i, j = 1, 2, 6$

$E_s$ = shear modulus of an orthotropic lamina in the principal coordinates

$E_x$ = Young's modulus of an orthotropic lamina in the principal direction of the greater modulus

$E_y$ = Young's modulus of an orthotropic lamina in the principal direction of the lesser modulus

$K_i$ = midplane curvature along the structural axis

$M_1$ = moment resultant about 1 axis (Fig. M3-14)

$M_2$ = moment resultant about 2 axis (Fig. M3-14)

$M_6$ = twisting resultant (Fig. M3-14)

$N_1$ = force resultant in 1 direction (Fig. M3-15)

$N_2$ = force resultant in 2 direction (Fig. M3-15)

$N_6$ = in-plane shear force resultant (Fig. M3-15)

$Q_{ij}$ = reduced stiffness transformed to the vessel (1–2) axes (off-axis directions); $i, j = 1, 2, 6$

$Q_{ss}$, $Q_{xx}$, $Q_{xy}$, $Q_{yy}$ = reduced stiffness in the principal material direction, defined by Eqs. (4) through (7) (on-axis directions)

$t_k$ = thickness of the $k^{th}$ layer (Fig. M3-16)

$z_k$ = distance from the reference surface to the center of the $k^{th}$ layer (Fig. M3-16)

$\epsilon_i$ = normal strain of a layer in the $i$ direction ($i = 1, 2, 6$)

$\epsilon_i^0$ = midplane normal strain in direction $i$ of the laminate

$\epsilon_s$, $\epsilon_x$, $\epsilon_y$ = normal layer strains in the material coordinate axis

$\nu_x$ = principal Poisson's ratio of a lamina (the negative of strain in the $y$ direction from stress in the $x$ direction)

$\sigma_i$ = normal stress in the $i$ direction ($i = 1, 2, 6$)

$\sigma_s$, $\sigma_x$, $\sigma_y$ = normal layer stresses in the material coordinate axis

$\sigma_6$ = shear stress in the $i$–$j$ coordinate system

$\theta$ = angle between the $x$ coordinate axis and the 1 coordinate axis (Fig. M3-17)

## M3-420 Lamina Reduced Stiffness

The stress–strain relations in the principal material directions of an orthotropic lamina are as follows:

$$\sigma_x = Q_{xx}\epsilon_x + Q_{xy}\epsilon_y \quad (1)$$

$$\sigma_y = Q_{xy}\epsilon_x + Q_{yy}\epsilon_y \quad (2)$$

$$\sigma_s = Q_{ss}\epsilon_s \quad (3)$$

The reduced stiffnesses of a lamina are calculated from the elastic properties, $E_x$, $E_y$, $\nu_x$, and $E_s$. These may be measured values or calculated by the semigraphical procedure below. The required input information for each layer is the fiber weight per unit area, the tensile modulus of the resin matrix, the type of reinforcement, and the fiber density.

*(a)* A step-by-step procedure for lamina with unidirectional roving is as follows.

*(1)* Calculate the volume fraction of fiber $V_f$ from Eq. (1) in para. M3-200.

*(2)* Using the value of $V_f$ from step (1), obtain the value of $E_x$ from Fig. M3-3, M3-5, M3-7, or M3-9, depending on the value of $V_f$. $E_x$ is the value of the modulus at an orientation angle of 0 deg. Obtain $E_y$ from the same graph as the value of the modulus at an orientation angle of 90 deg.

*(3)* Using the value of $V_f$ from step (1), obtain the value of $E_s$ from Fig. M3-4, M3-6, M3-8, or M3-10, depending on the value of $V_f$. $E_s$ is the in-plane shear modulus at an orientation angle of 0 deg.

*(4)* The major Poisson's ratio $\nu_x$ is obtained from Fig. M3-13 for an orientation angle of 0 deg.

*(b)* The reduced stiffnesses of each lamina are then given as follows:

$$Q_{xx} = E_x/(1 - \nu_x\nu_y) \quad (4)$$

$$Q_{xy} = \nu_y E_x/(1 - \nu_x\nu_y) \quad (5)$$

$$Q_{yy} = E_y/(1 - \nu_x\nu_y) \quad (6)$$

$$Q_{ss} = E_s \quad (7)$$

where $\nu_y = \nu_x E_y/E_x$. Lamina with randomly oriented fibers are isotropic in the plane of the laminate, and are characterized by a single tensile modulus $E$ and Poisson's ratio $\nu$. To obtain $E$ and $\nu$:

*(1)* Calculate $V_f$ from Eq. (1) in para. M3-200.

*(2)* The tensile modulus is obtained using the value of $V_f$ from step (1) and Fig. M3-1.



Copyright ASME International
Provided by IHS under license with ASME
No reproduction or networking permitted without license from IHS
Not for Resale

*(3)* Poisson's ratio is given by $\nu = 0.33$.

In an isotropic lamina, $E_x = E_y = E$ and $\nu_x = \nu_y = \nu$. Then the reduced stiffnesses in an isotropic layer are computed from:

$$Q_{xx} = Q_{yy} = E/(1 - \nu^2) \quad (8)$$

$$Q_{xy} = \nu Q_{xx} \quad (9)$$

$$Q_{ss} = E/2(1 + \nu) \quad (10)$$

The transformed reduced stiffnesses are the reduced stiffnesses expressed in the 1–2 system. The relationship between the $x$–$y$ and 1–2 axis systems is shown in Fig. M3-17. The 1–2 system is in the plane of the laminate and is chosen for convenience. A typical choice would be to align 1 with the circumferential vessel direction and 2 with the axial direction. The transformed reduced stiffnesses $Q_{ij}$ are calculated from the reduced stiffnesses and the angle $\theta$. Let $m = \cos\theta$ and $n = \sin\theta$. Then the equations for the transformed reduced stiffnesses are:

$$Q_{11} = Q_{xx}m^4 + Q_{yy}n^4 + (Q_{xy} + 2Q_{ss})2m^2n^2 \quad (11)$$

$$Q_{12} = (Q_{xx} + Q_{yy} - 4Q_{ss})m^2n^2 + Q_{xy}(m^4 + n^4) \quad (12)$$

$$Q_{22} = Q_{xx}n^4 + Q_{yy}m^4 + (Q_{xy} + 2Q_{ss})2m^2n^2 \quad (13)$$

$$Q_{16} = Q_{xx}m^3n - Q_{yy}mn^3 + (Q_{xy} + 2Q_{ss})(mn^3 - m^3n) \quad (14)$$

$$Q_{26} = Q_{xx}mn^3 - Q_{yy}m^3n + (Q_{xy} + 2Q_{ss})(m^3n - mn^3) \quad (15)$$

$$Q_{66} = (Q_{xx} + Q_{yy} - 2Q_{xy})m^2n^2 + Q_{ss}(m^2 - n^2)^2 \quad (16)$$

The stress–strain relations for the lamina in the 1–2 coordinates are:

$$\sigma_1 = Q_{11}\epsilon_1 + Q_{12}\epsilon_2 + Q_{16}\epsilon_6 \quad (17)$$

$$\sigma_2 = Q_{12}\epsilon_1 + Q_{22}\epsilon_2 + Q_{26}\epsilon_6 \quad (18)$$

$$\sigma_6 = Q_{16}\epsilon_1 + Q_{26}\epsilon_2 + Q_{66}\epsilon_6 \quad (19)$$

In an isotropic laminate, the reduced stiffnesses have the same value for any value of $\theta$, so that the stress–strain relation for the 1–2 system has the same form as Eqs. (1), (2), and (3).

## M3-430 Stiffness Coefficients for the Laminate

The stiffness coefficients $A_{ij}$, $B_{ij}$, and $D_{ij}$ are used to relate the resultant forces and moments (Figs. M3-14 and M3-15) to the middle surface strains and curvatures.

$$N_1 = A_{11}\epsilon_1^0 + A_{12}\epsilon_2^0 + A_{16}\epsilon_6^0 + B_{11}K_1 + B_{12}K_2 + B_{16}K_6 \quad (20)$$

$$N_2 = A_{12}\epsilon_1^0 + A_{22}\epsilon_2^0 + A_{26}\epsilon_6^0 + B_{12}K_1 + B_{22}K_2 + B_{26}K_6 \quad (21)$$

$$N_6 = A_{16}\epsilon_1^0 + A_{26}\epsilon_2^0 + A_{66}\epsilon_6^0 + B_{16}K_1 + B_{26}K_2 + B_{66}K_6 \quad (22)$$

$$M_1 = B_{11}\epsilon_1^0 + B_{12}\epsilon_2^0 + B_{16}\epsilon_6^0 + D_{11}K_1 + D_{12}K_2 + D_{16}K_6 \quad (23)$$

$$M_2 = B_{12}\epsilon_1^0 + B_{22}\epsilon_2^0 + B_{26}\epsilon_6^0 + D_{12}K_1 + D_{22}K_2 + D_{26}K_6 \quad (24)$$

$$M_6 = B_{16}\epsilon_1^0 + B_{26}\epsilon_2^0 + B_{66}\epsilon_6^0 + D_{16}K_1 + D_{26}K_2 + D_{66}K_6 \quad (25)$$

The extensional stiffness coefficients are calculated from the transformed reduced stiffnesses for each layer $(Q_{ij})_k$, the thicknesses $t_k$, and the distance $z_k$. The location of the reference plane in the $z$ direction does not affect the validity of the equations in this paragraph. However, it must coincide with the plane to which the stress resultants and moments are referred for design by Subpart 3B, or it must coincide with the neutral axis as specified in para. M3-200 for design by Subpart 3A.

$$A_{ij} = \sum_{k=1}^{N} (Q_{ij})_k t_k \quad (26)$$

$$B_{ij} = \sum_{k=1}^{N} (Q_{ij})_k z_k t_k \quad (27)$$

$$D_{ij} = \sum_{k=1}^{N} (Q_{ij})_k (t_k z_k^2 + t_k^3 / 12) \quad (28)$$

where

$i$ = 1, 2, 6
$j$ = 1, 2, 6
$N$ = number of layers

The stiffness coefficients are what are required for stress analysis.



Copyright ASME International
Provided by IHS under license with ASME
No reproduction or networking permitted without license from IHS
Not for Resale

## M3-440 Procedure for Calculating the Stiffness Coefficients

This section contains a step-by-step algorithm for calculating the laminate stiffness coefficients.

*(a)* From the known layer thicknesses and laminating sequence, calculate $t_k$ and $z_k$ for each layer.

*(b)* For each layer, obtain values for $(E_x)_k$, $(E_y)_k$, $(\nu_x)_k$, and $(E_s)_k$, and compute the reduced stiffnesses $(Q_{xx})_k$, $(Q_{xy})_k$, and $(Q_{yy})_k$ from Eqs. (4) through (7). For isotropic plies, use Eqs. (8) through (10).

*(c)* Transform the reduced stiffness $(Q_{ij})_k$ for each layer from the principal material directions to the vessel directions, using Eqs. (11) through (16), to obtain the transformed reduced stiffness for each layer $(Q_{ij})_k$. In the case of isotropic layers, the transformation is not required, because Eqs. (8), (9), and (10) are valid for all angles $\theta$.

*(d)* Calculate the extensional stiffness coefficients $A_{ij}$ for the entire laminate from the $(Q_{ij})_k$, $t_k$, and Eq. (26).

*(e)* Calculate the coupling stiffness coefficients $B_{ij}$ for the laminate from the $(Q_{ij})_k$, $t_k$, $z_k$, and Eq. (27).

*(f)* Calculate the bending stiffness coefficients $D_{ij}$ for the laminate from the $(Q_{ij})_k$, $t_k$, $z_k$, and Eq. (28).

## M3-500 THE QUADRATIC INTERACTION CRITERION

In general, a lamina has five independent uniaxial ultimate strengths: tensile and compressive strengths in the principal direction of greater strength, tensile and compressive strengths in the direction of lesser strength, and shear strength with respect to a pure shear stress in the principal directions. Type I and II laminates are treated as isotropic herein, so any direction can be considered as a principal direction. In Type X laminates, the principal direction of greater strength is aligned with the continuous roving and the principal direction of lesser strength is perpendicular to the roving. Further, the five strength values may be unequal.

The quadratic interaction criterion defines the interactions between the five strengths in cases when more than one component of stress is applied to the lamina, and it defines allowable stress states in terms of the strengths.

The criterion is applied to each lamina separately, and if one or more lamina fail the criterion, the corresponding load on the vessel is not allowed. The criterion is applied separately to each combination of stresses or stress and moment resultants calculated by the rules of para. 3B-400. In the following sections it is assumed that the laminate stiffness coefficients and stress and moment resultants have already been calculated for all sections and load combinations under consideration.

The rest of para. M3-500 gives the definitions and equations needed to make the calculations required by paras. 3B-400 and 3B-500.

## M3-510 Nomenclature

In addition to the nomenclature defined in para. M3-410, the following symbols are used:

$F_{ss}$, $F_x$, $F_{xx}$, $F_{xy}$, $F_y$ = strength parameters defined in terms of the five strengths

$S$ = ultimate shear strength with respect to shear stress in the $x$–$y$ axes

$S_{ij}$ = $i$–$j$ component of the compliance matrix [the compliance matrix is the inverse of the stiffness matrix defined by Eqs. (20) through (25)]

$X$ = ultimate tensile strength of a lamina in the $x$ (strong) direction

$X_c$ = ultimate compressive strength of a lamina in the $x$ direction

$Y$ = ultimate tensile strength of a lamina in the weak direction

$Y_c$ = ultimate compressive strength of a lamina in the weak direction

$w$ = parameter that equals 1 for the upper surface of a laminate and −1 for the lower

## M3-520 Calculation of Layer Strains and Stresses

The strains at the reference surface are calculated using the force and moment resultants and the inverted stiffness matrix of the laminate. The inverted stiffness matrix is defined as follows:

$$S_{ij} = \begin{bmatrix} A_{11}A_{12}A_{16}B_{11}B_{12}B_{16} \\ A_{21}A_{22}A_{26}B_{21}B_{22}B_{26} \\ A_{61}A_{62}A_{66}B_{61}B_{62}B_{66} \\ B_{11}B_{12}B_{16}D_{11}D_{12}D_{16} \\ B_{21}B_{22}B_{26}D_{21}D_{22}D_{26} \\ B_{61}B_{62}B_{66}D_{61}D_{62}D_{66} \end{bmatrix}^{-1}$$

where $i$ = 1 to 6 and $j$ = 1 to 6, inclusive.

The strains and curvatures at the reference surface are then calculated by Eqs. (1) through (6):

$$\epsilon_1^0 = S_{11}N_1 + S_{12}N_2 + S_{13}N_6 + S_{14}M_1 + S_{15}M_2 + S_{16}M_6 \quad (1)$$



Copyright ASME International
Provided by IHS under license with ASME
No reproduction or networking permitted without license from IHS
Not for Resale

$$\epsilon_2^0 = S_{21}N_1 + S_{22}N_2 + S_{23}N_6 + S_{24}M_1 + S_{25}M_2 + S_{26}M_6 \quad (2)$$

$$\epsilon_6^0 = S_{31}N_1 + S_{32}N_2 + S_{33}N_6 + S_{34}M_1 + S_{35}M_2 + S_{36}M_6 \quad (3)$$

$$K_1 = S_{41}N_1 + S_{42}N_2 + S_{43}N_6 + S_{44}M_1 + S_{45}M_2 + S_{46}M_6 \quad (4)$$

$$K_2 = S_{51}N_1 + S_{52}N_2 + S_{53}N_6 + S_{54}M_1 + S_{55}M_2 + S_{56}M_6 \quad (5)$$

$$K_6 = S_{61}N_1 + S_{62}N_2 + S_{63}N_6 + S_{64}M_1 + S_{65}M_2 + S_{66}M_6 \quad (6)$$

The strains in each layer are then obtained from Eqs. (7) through (9):

$$(\epsilon_1)_k = \epsilon_1^0 + (z_k + wt_k/2)K_1 \quad (7)$$

$$(\epsilon_2)_k = \epsilon_2^0 + (z_k + wt_k/2)K_2 \quad (8)$$

$$(\epsilon_6)_k = \epsilon_6^0 + (z_k + wt_k/2)K_6 \quad (9)$$

If the thickness of any layer is less than one-fifth of the total laminate thickness, then the strains at the midplane of the layer are sufficiently accurate and $w = 0$. Otherwise, the surface strains must be calculated by setting $w = 1$ for the upper surface or $w = -1$ for the lower surface.

The layer strains are then transformed to the axis of each layer by Eqs. (10) through (12):

$$(\epsilon_x)_k = (\epsilon_1)_k m_k^2 + (\epsilon_2)_k n_k^2 + (\epsilon_6)_k m_k n_k \quad (10)$$

$$(\epsilon_y)_k = (\epsilon_1)_k n_k^2 + (\epsilon_2)_k m_k^2 - (\epsilon_6)_k m_k n_k \quad (11)$$

$$(\epsilon_s)_k = 2[(\epsilon_2)_k - (\epsilon_1)_k]m_k n_k + (\epsilon_6)_k (m_k^2 - n_k^2) \quad (12)$$

The corresponding stresses in each layer are then calculated by Eqs. (13) through (15):

$$(\sigma_x)_k = Q_{xx}(\epsilon_x)_k + Q_{xy}(\epsilon_y)_k \quad (13)$$

$$(\sigma_y)_k = Q_{xy}(\epsilon_x)_k + Q_{yy}(\epsilon_y)_k \quad (14)$$

$$(\sigma_s)_k = Q_{ss}(\epsilon_s)_k \quad (15)$$

## M3-530 Calculation of Strength Ratios

The strength ratio, which is the ratio of the stress capacity of a single layer relative to the stress generated by an applied loading condition, is calculated using the stresses from Eqs. (13) through (15) and the following quadratic interaction equation:

$$R^2(F_{xx}\sigma_x^2 + 2F_{xy}\sigma_x\sigma_y + F_{yy}\sigma_y^2 + F_{ss}\sigma_s^2) + R(F_x\sigma_x + F_y\sigma_y) - 1 = 0 \quad (16)$$

The strength ratio $R$ is then given by:

$$R = \frac{-H \pm \sqrt{H^2 + 4G}}{2G}$$

where

$$G = F_{xx}\sigma_x^2 + 2F_{xy}\sigma_x\sigma_y + F_{yy}\sigma_y^2 + F_{ss}\sigma_s^2$$

$$H = F_x\sigma_x + F_y\sigma_y$$

The strength coefficients are calculated using the layer strengths as follows:

$$F_{xx} = \frac{1}{XX_c}$$

$$F_{xy} = -\frac{1}{2}\sqrt{F_{xx}F_{yy}}$$

$$F_{yy} = \frac{1}{YY_c}$$

$$F_{ss} = \frac{1}{S^2}$$

$$F_x = \frac{1}{X} - \frac{1}{X_c}$$

$$F_y = \frac{1}{Y} - \frac{1}{Y_c}$$



Copyright ASME International
Provided by IHS under license with ASME
No reproduction or networking permitted without license from IHS

Not for Resale

The layer strengths may be determined from appropriate testing of individual layers or they may be calculated using strain limits as follows:

$$X = \epsilon_{xt}E_x$$

$$X_c = \epsilon_{xc}E_x$$

$$Y = \epsilon_{yt}E_y$$

$$Y_c = \epsilon_{yc}E_y$$

$$S = \epsilon_{xy}Q_{ss}$$

The strain limits may be determined from appropriate testing of individual layers or the following strain limits may be used:

| Layer Type | Random Fiber | Oriented Fiber |
|---|---|---|
| $\epsilon_{xt}$ | 0.0150 | 0.0200 |
| $\epsilon_{xc}$ | 0.0200 | 0.0120 |
| $\epsilon_{yt}$ | 0.0150 | 0.0015 |
| $\epsilon_{yc}$ | 0.0200 | 0.0080 |
| $\epsilon_{xy}$ | 0.0268 | 0.0268 |

## M3-540 Procedure for Calculating the Strength Ratio

The following computation must be performed for each set of superimposed resultants required by para. 3B-400.

*(a)* Compute the reference surface strains, curvatures, and twist using Eqs. (1) through (6). These are in the vessel coordinates.

*(b)* For the upper and lower surfaces of each lamina, calculate the strains in vessel coordinates using Eqs. (7) through (9).

*(c)* Calculate the stresses in vessel coordinates at the upper and lower surface of each lamina from the results of (b) using Eqs. (10) through (12).

*(d)* Transform the stresses computed in (c) to on-axis coordinates using Eqs. (13) through (15). Each lamina may have a different $K$.

*(e)* Calculate the strength ratio at the top and bottom surfaces for each lamina using Eqs. (16) and (17).



Copyright ASME International
Provided by IHS under license with ASME
No reproduction or networking permitted without license from IHS
Not for Resale

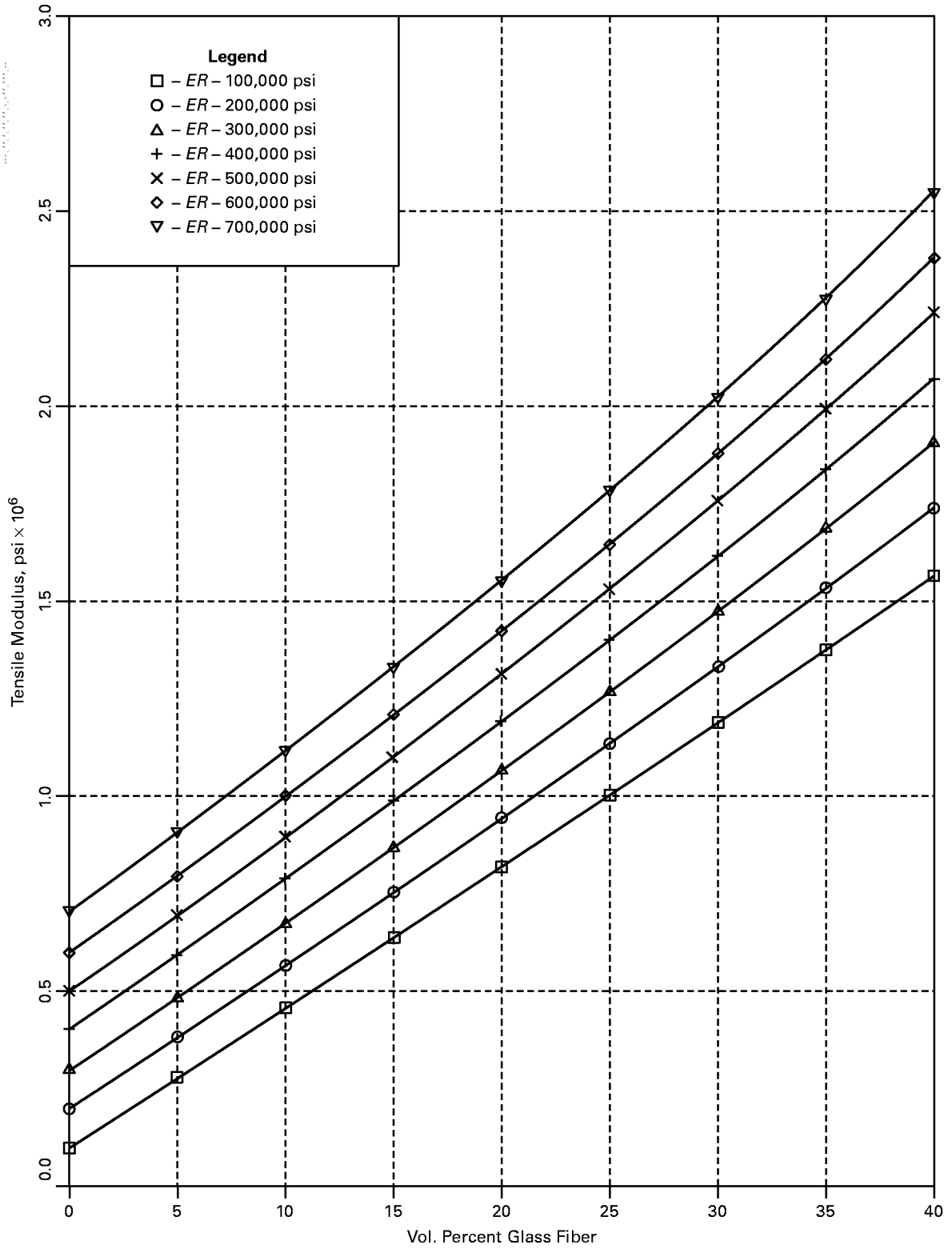


**FIG. M3-1 RANDOM GLASS FIBER**



Copyright ASME International
Provided by IHS under license with ASME
No reproduction or networking permitted without license from IHS
Not for Resale

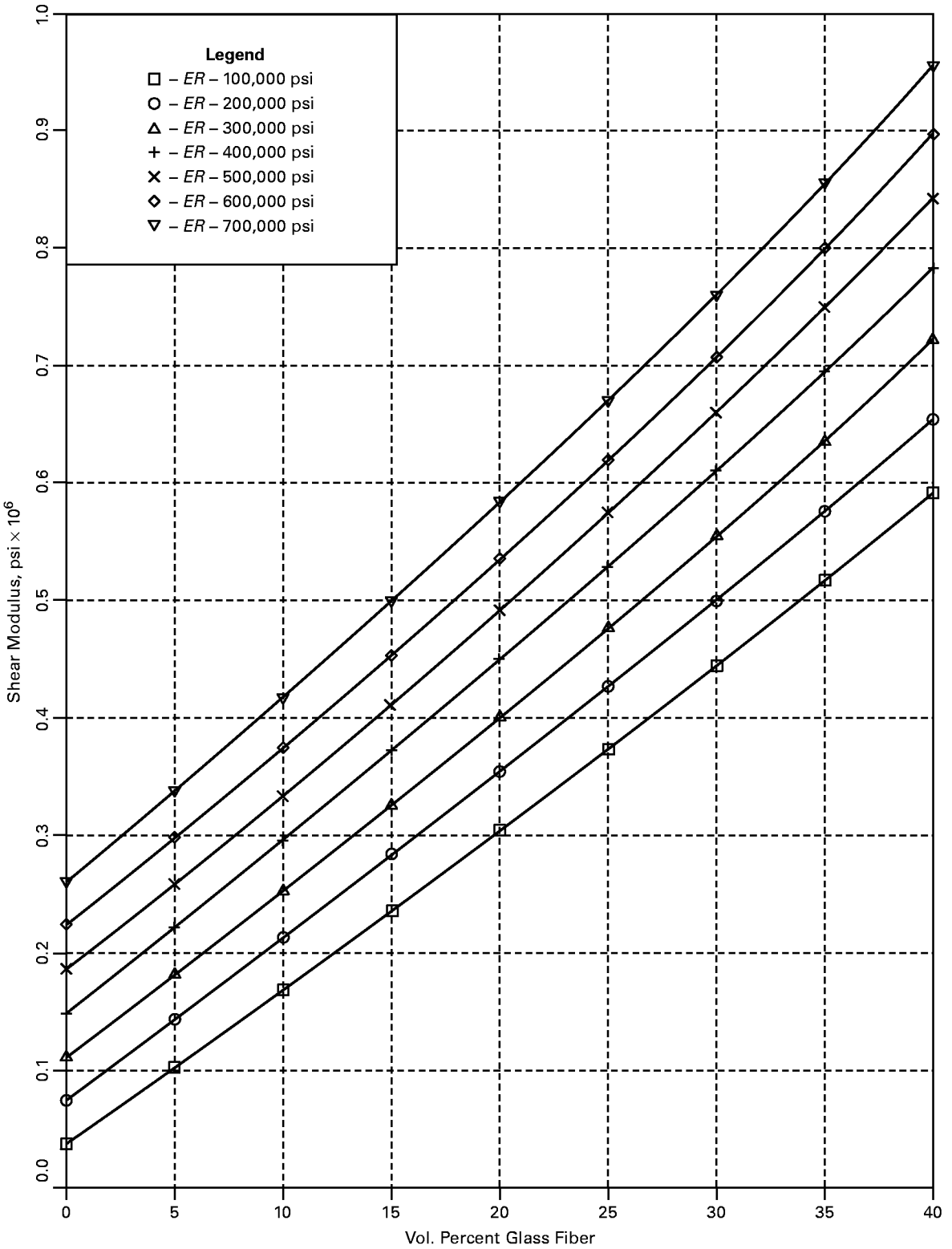


**FIG. M3-2 RANDOM GLASS FIBER**



Copyright ASME International
Provided by IHS under license with ASME
No reproduction or networking permitted without license from IHS
Not for Resale

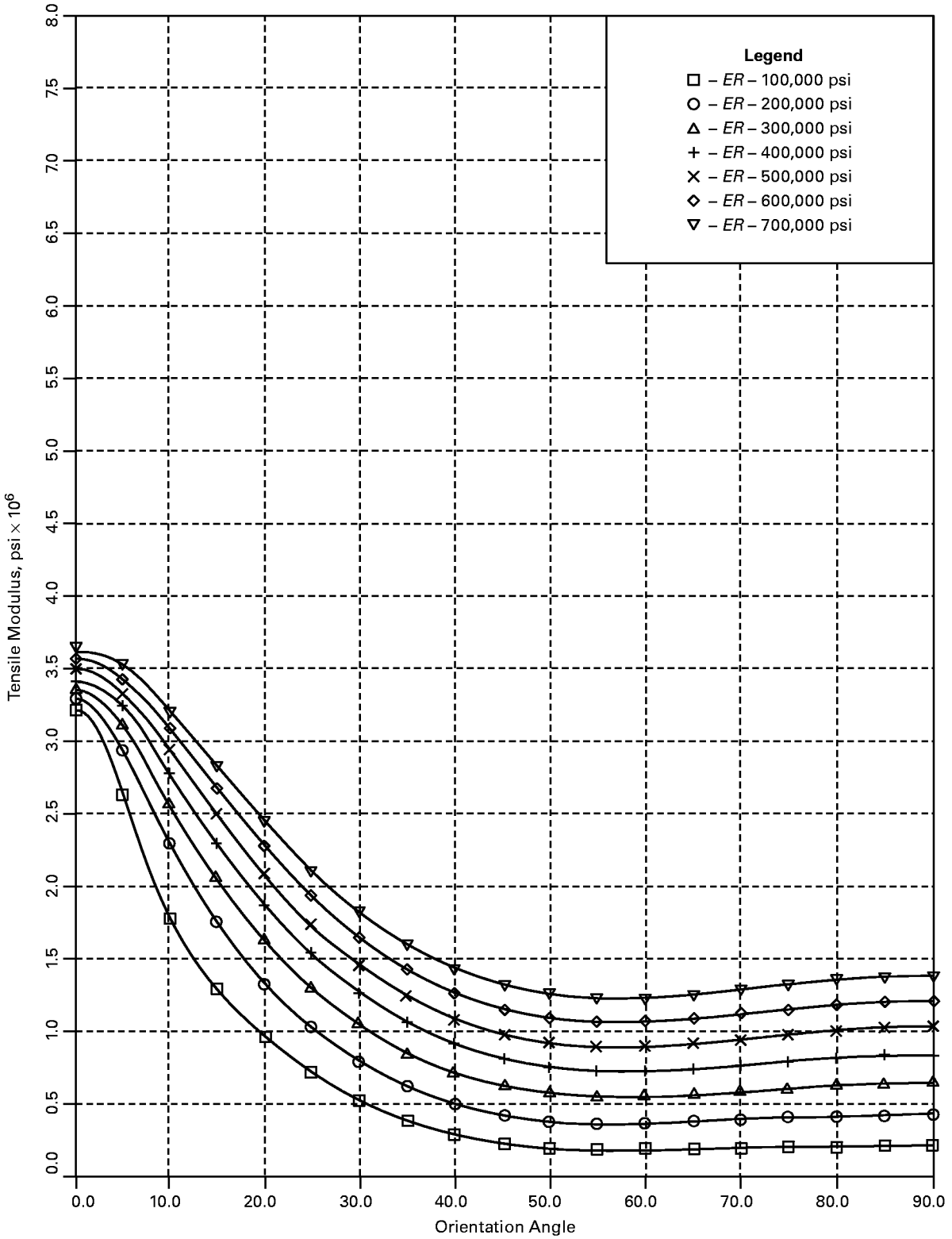


**FIG. M3-3 ORIENTED GLASS FIBER — 30 VOL. %**



--`,,`,,-`-`,,`,,`,`,,`---

Copyright ASME International
Provided by IHS under license with ASME
No reproduction or networking permitted without license from IHS

Not for Resale

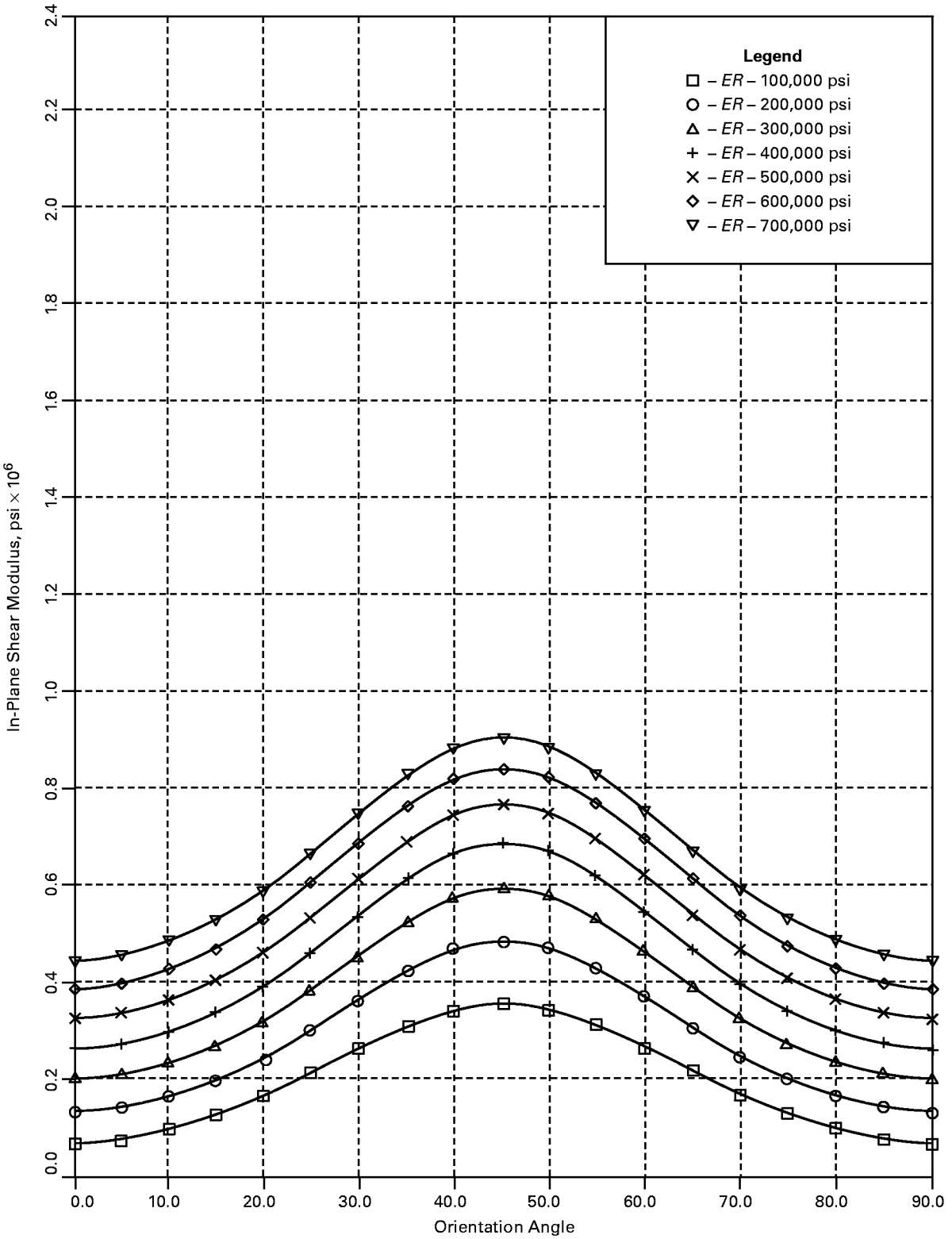


**FIG. M3-4 ORIENTED GLASS FIBER — 30 VOL. %**



Copyright ASME International
Provided by IHS under license with ASME
No reproduction or networking permitted without license from IHS
Not for Resale

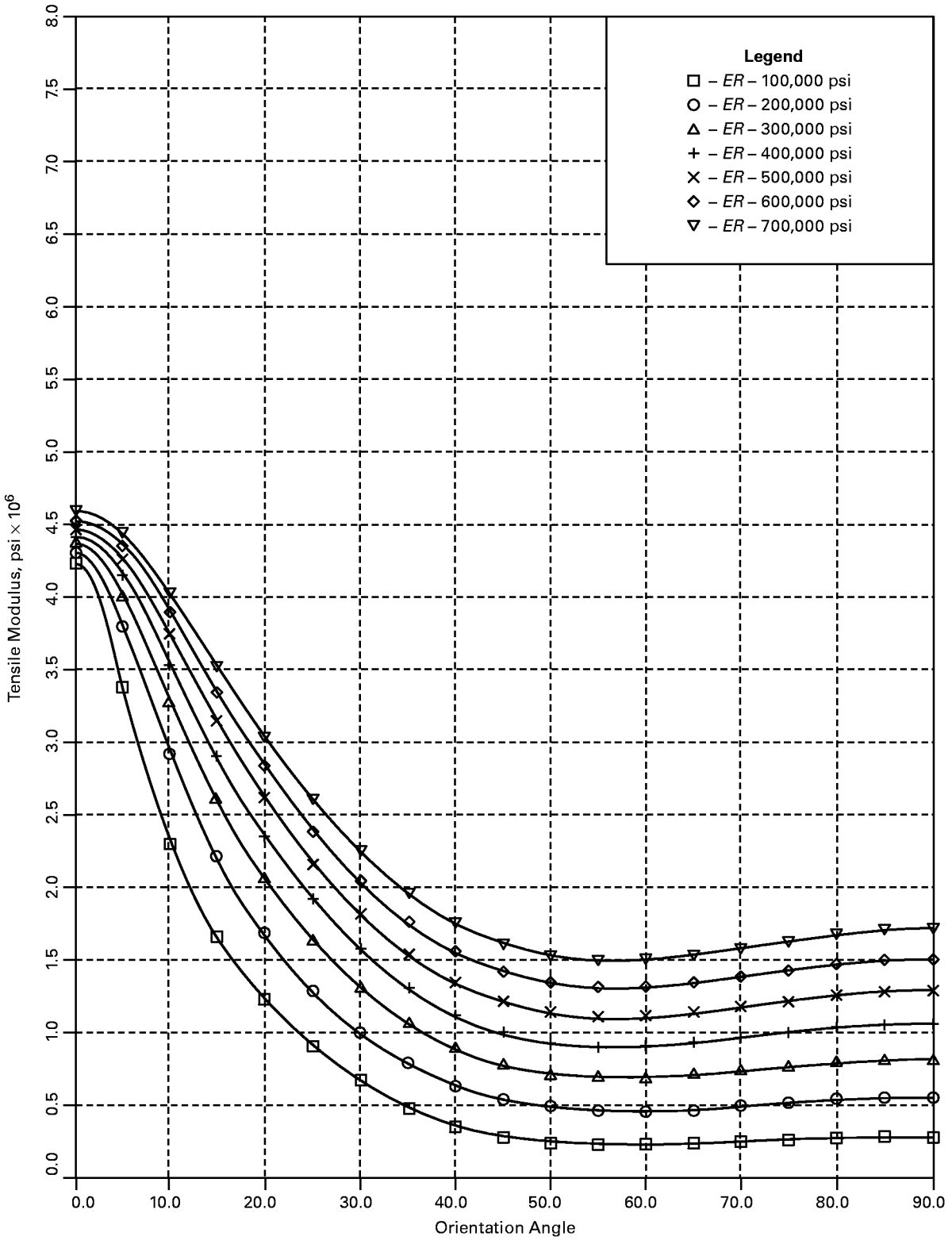


**FIG. M3-5 ORIENTED GLASS FIBER — 40 VOL. %**



Copyright ASME International
Provided by IHS under license with ASME
No reproduction or networking permitted without license from IHS
Not for Resale

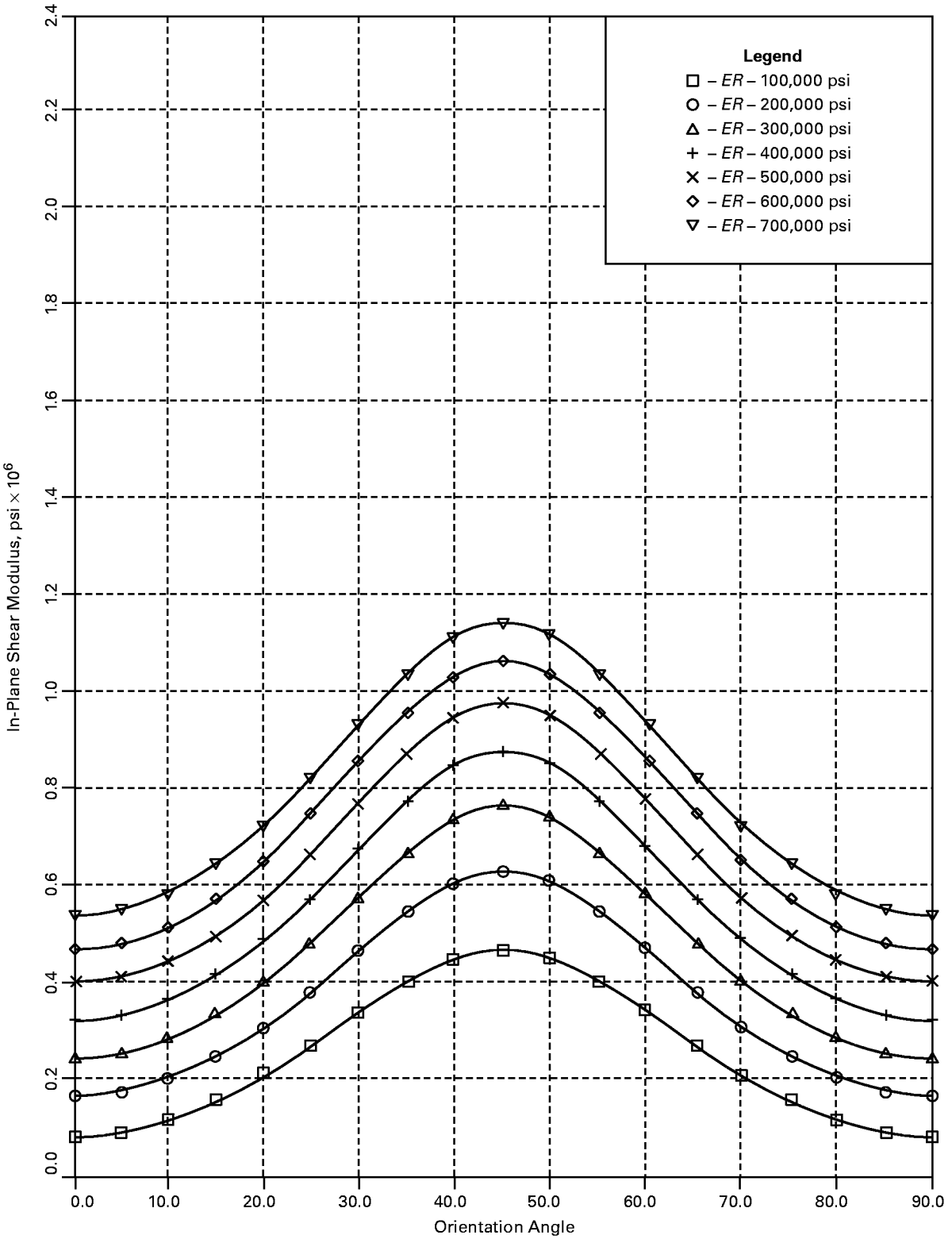


**FIG. M3-6 ORIENTED GLASS FIBER — 40 VOL. %**



Copyright ASME International
Provided by IHS under license with ASME
No reproduction or networking permitted without license from IHS
Not for Resale

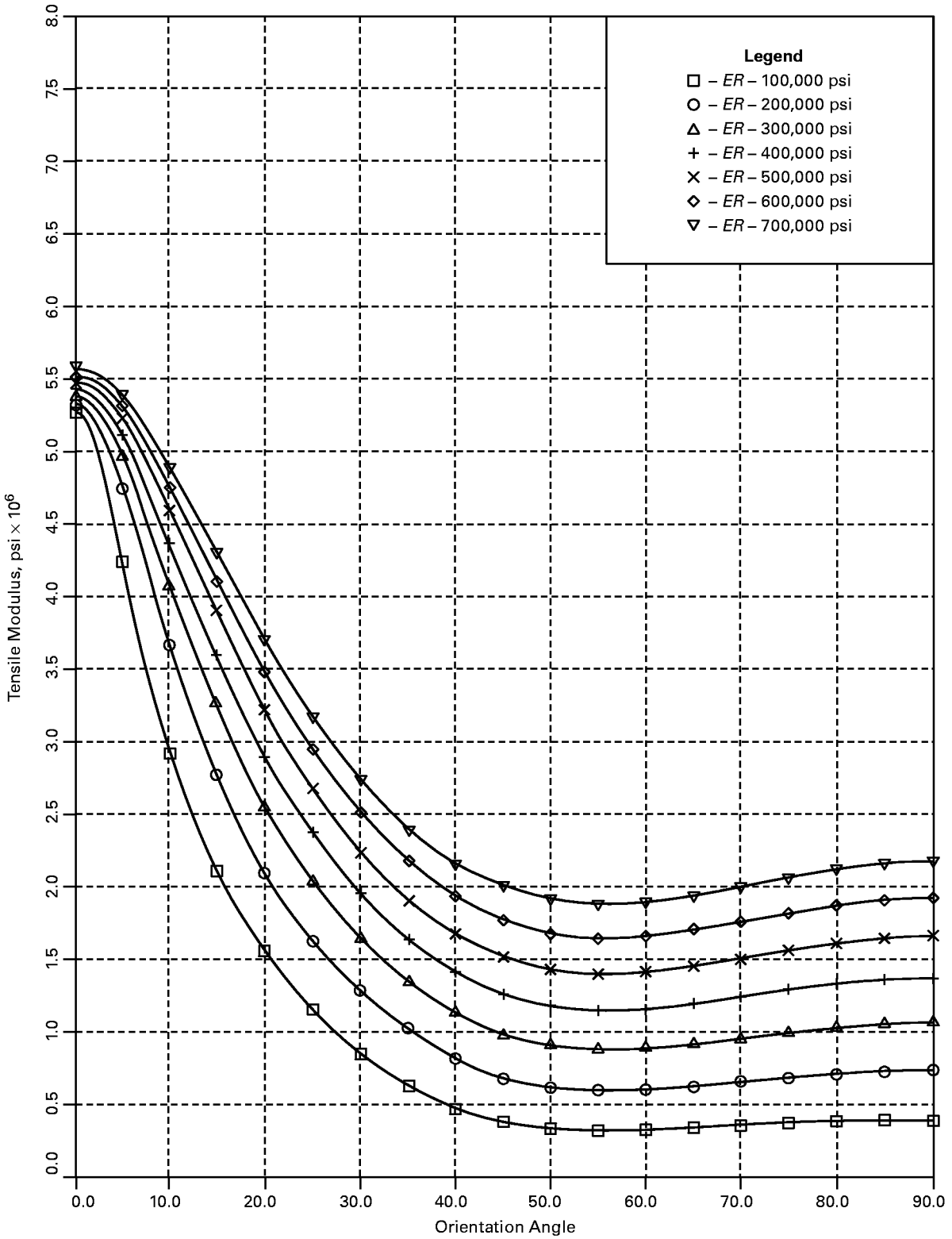


**FIG. M3-7 ORIENTED GLASS FIBER — 50 VOL. %**



Copyright ASME International
Provided by IHS under license with ASME
No reproduction or networking permitted without license from IHS
Not for Resale

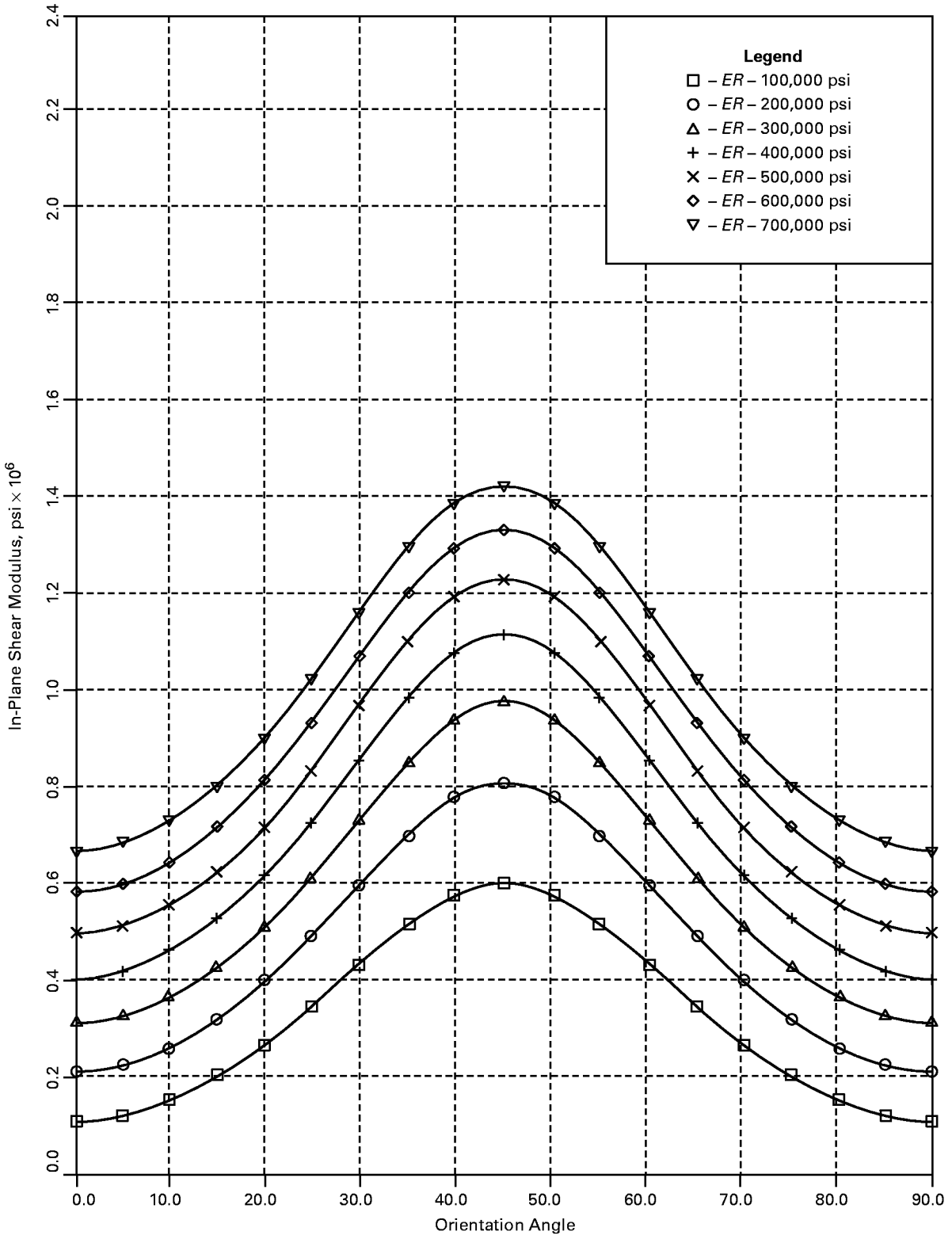


**FIG. M3-8 ORIENTED GLASS FIBER — 50 VOL. %**



Copyright ASME International
Provided by IHS under license with ASME
No reproduction or networking permitted without license from IHS
Not for Resale

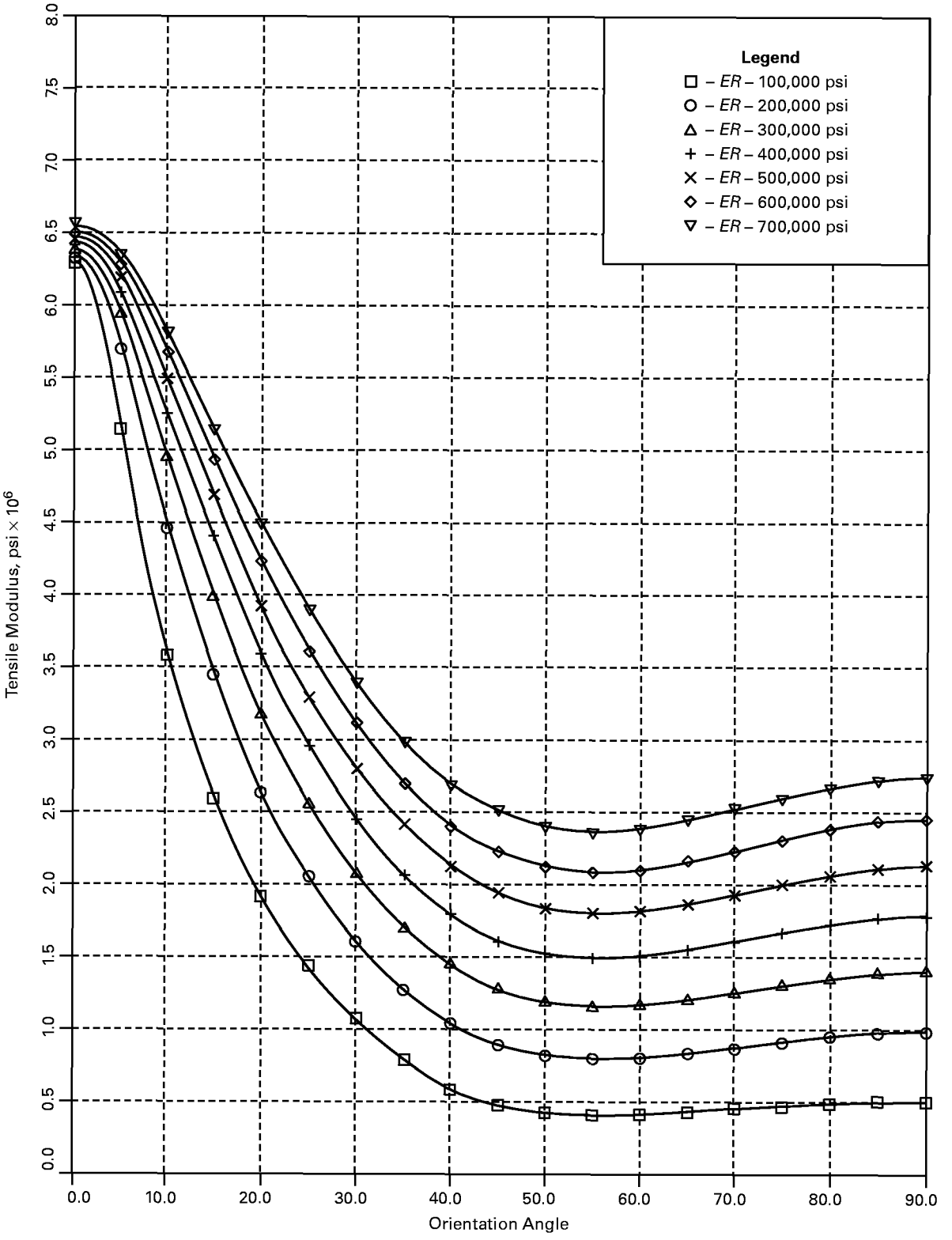


**FIG. M3-9 ORIENTED GLASS FIBER — 60 VOL. %**



Copyright ASME International
Provided by IHS under license with ASME
No reproduction or networking permitted without license from IHS
Not for Resale

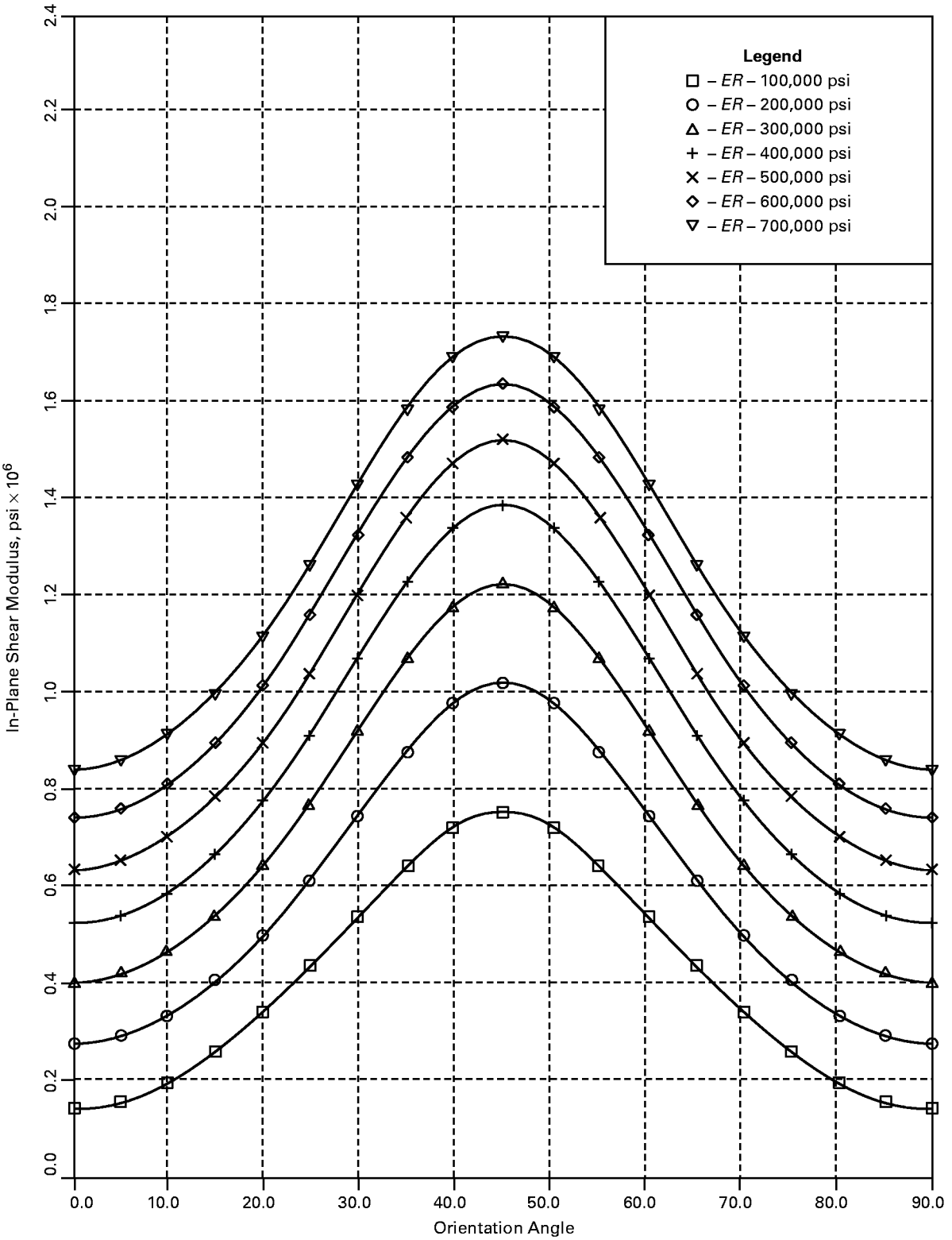


**FIG. M3-10 ORIENTED GLASS FIBER — 60 VOL. %**



Copyright ASME International
Provided by IHS under license with ASME
No reproduction or networking permitted without license from IHS
Not for Resale

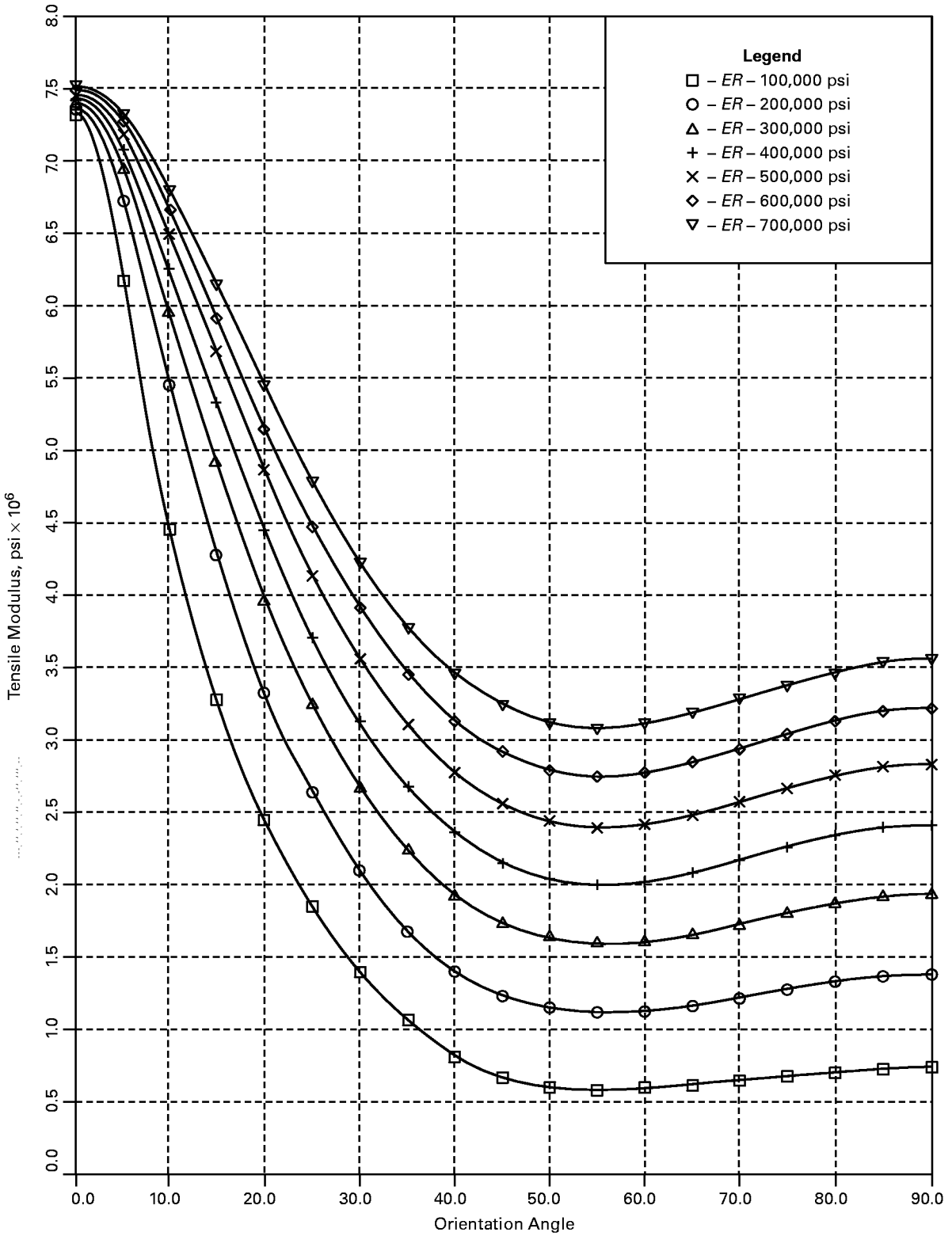


**FIG. M3-11 ORIENTED GLASS FIBER — 70 VOL. %**



Copyright ASME International
Provided by IHS under license with ASME
No reproduction or networking permitted without license from IHS
Not for Resale

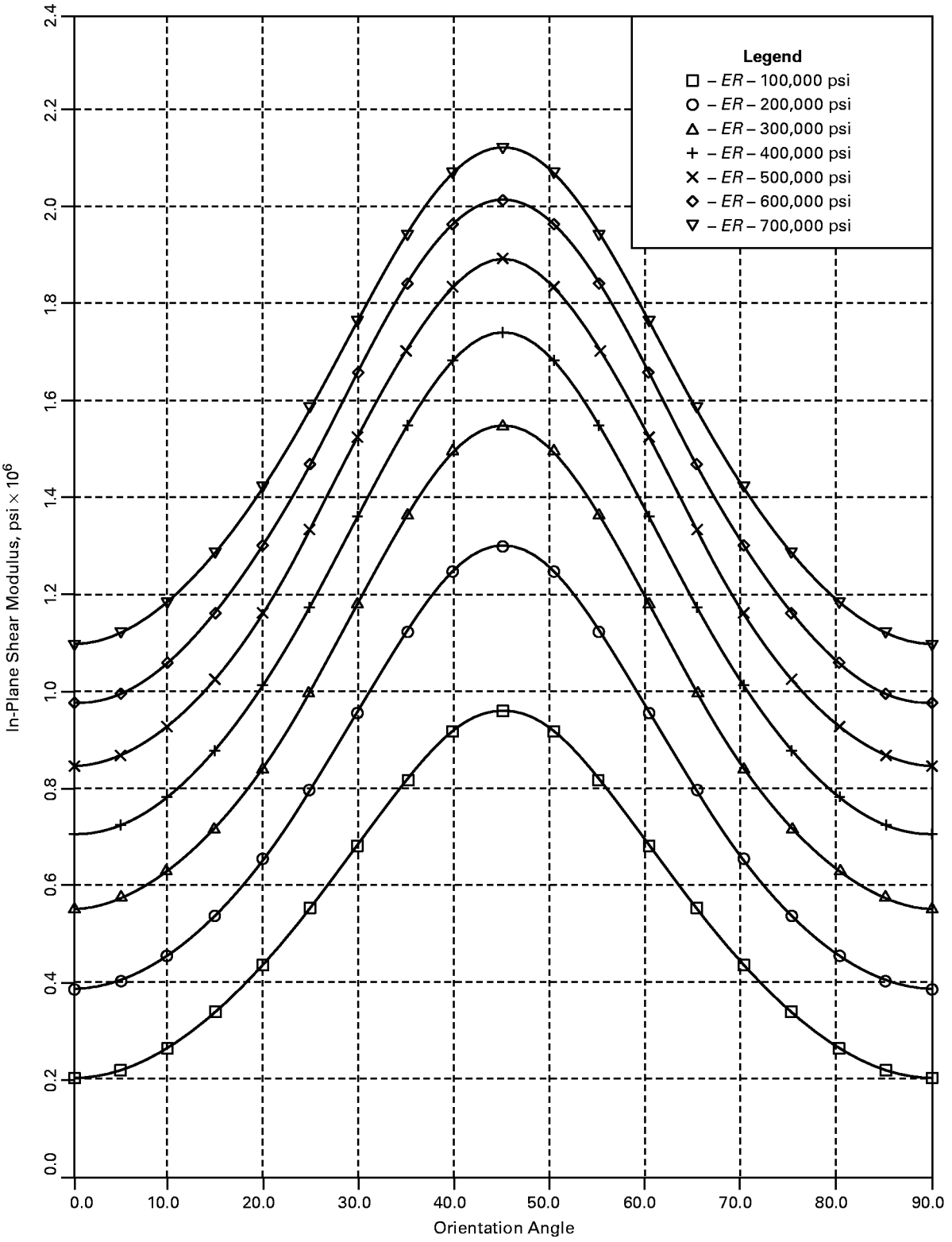


**FIG. M3-12 ORIENTED GLASS FIBER — 70 VOL. %**



Copyright ASME International
Provided by IHS under license with ASME
No reproduction or networking permitted without license from IHS
Not for Resale

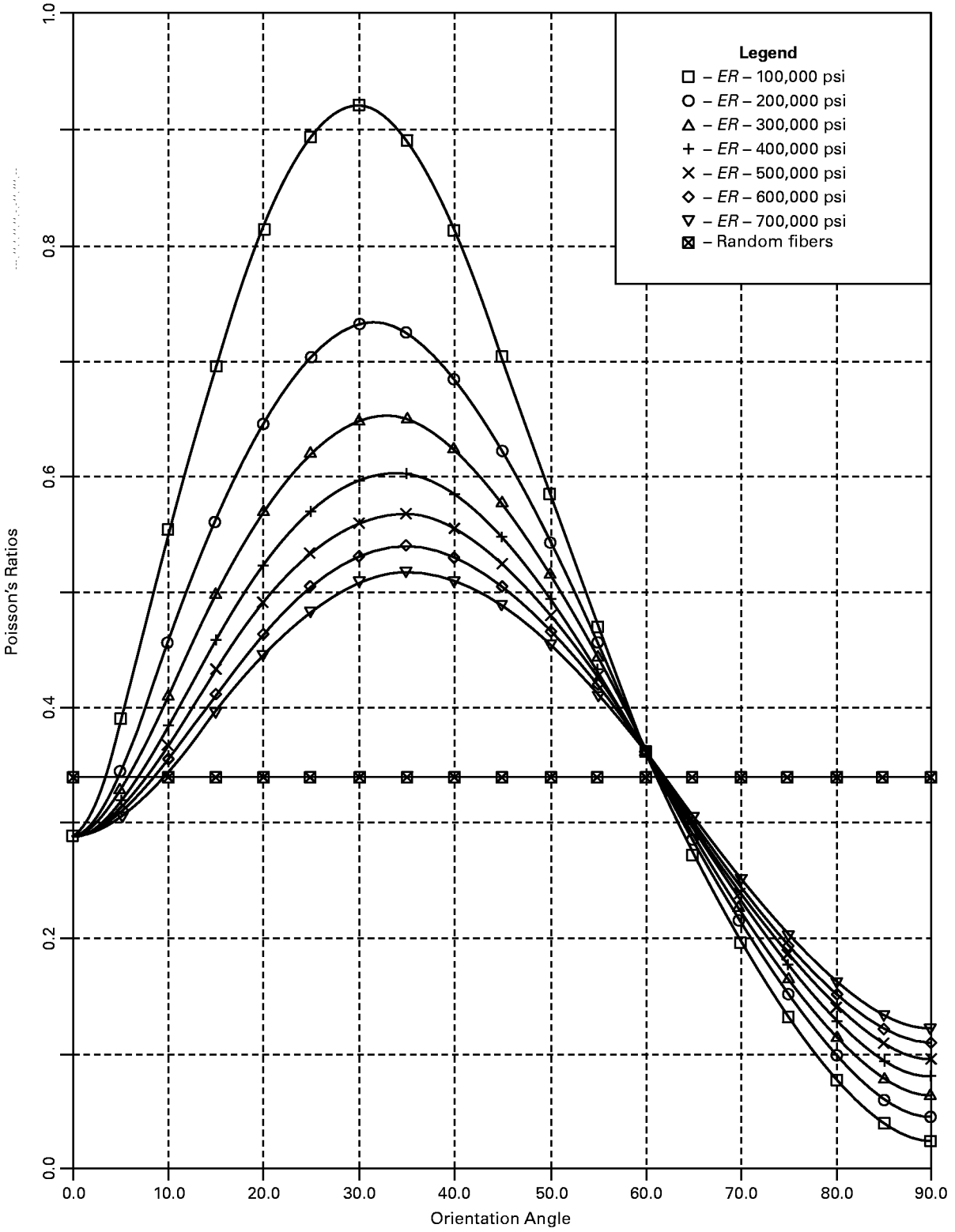


**FIG. M3-13 POISSON'S RATIOS –10 TO 70 VOL. %**



Copyright ASME International
Provided by IHS under license with ASME
No reproduction or networking permitted without license from IHS
Not for Resale

## TABLE M3-1 GLASS VOLUME FRACTION AND DENSITY

| Layer | $t_k$, in. | $K$, lb/sq ft | $V_k$ | $D_k$, lb/cu in. | $t_k D_k$, lb/sq in. |
|---|---|---|---|---|---|
| *V* | 0.013 | 0.0069 | 0.039 | 0.0486 | 0.0006 |
| *MM* | 0.086 | 0.1875 | 0.161 | 0.0544 | 0.0047 |
| [+/–54]$_3$ | 0.127 | 0.8533 | 0.495 | 0.0703 | 0.0089 |
| *M* | 0.043 | 0.0938 | 0.161 | 0.0544 | 0.0023 |
| *R* | 0.039 | 0.1667 | 0.315 | 0.0617 | 0.0024 |
| *M* | 0.043 | 0.0938 | 0.161 | 0.0544 | 0.0023 |
| Totals | 0.351 | 1.4019 | . . . | . . . | 0.0212 |

## TABLE M3-2 LAYER PROPERTIES

| Layer | $t$ | $z$ | $E \times 10^6$ Axial | $E \times 10^6$ Hoop | $G \times 10^6$ | $r$ Axial | $r$ Hoop |
|---|---|---|---|---|---|---|---|
| *V* | 0.013 | –0.169 | 0.55 | 0.55 | 0.20 | 0.34 | 0.34 |
| *MM* | 0.086 | –0.119 | 1.03 | 1.03 | 0.39 | 0.34 | 0.34 |
| [+/–54]$_3$ | 0.127 | –0.013 | 1.14 | 1.60 | 1.00 | 0.45 | 0.62 |
| *M* | 0.043 | 0.072 | 1.03 | 1.03 | 0.39 | 0.34 | 0.34 |
| *R*, 0 deg | 0.022 | 0.113 | 3.42 | 0.80 | 0.27 | 0.30 | 0.07 |
| *R*, 90 deg | 0.017 | 0.113 | 0.80 | 3.42 | 0.27 | 0.07 | 0.30 |
| *M* | 0.043 | 0.154 | 1.03 | 1.03 | 0.39 | 0.34 | 0.34 |
| Totals | 0.351 | . . . | . . . | . . . | . . . | . . . | . . . |

## TABLE M3-3 PRODUCTS OF LAYER PROPERTIES

| Layer | $Et \times 10^3$ | $Etz \times 10^3$ | $Etr \times 10^3$ | $Gt \times 10^3$ | $I \times 10^{-3}$ | $EI \times 10^3$ |
|---|---|---|---|---|---|---|
| **Axial Direction** | | | | | | |
| *V* | 7.15 | –1.21 | 2.43 | 2.60 | 0.441 | 0.243 |
| *MM* | 88.58 | –10.59 | 30.12 | 33.54 | 1.615 | 1.663 |
| [+/–54]$_3$ | 144.78 | –1.88 | 65.15 | 127.00 | 0.272 | 0.310 |
| *M* | 44.29 | 3.19 | 15.06 | 16.77 | 0.145 | 0.149 |
| *R*, 0 deg | 75.24 | 8.50 | 22.57 | 5.94 | 0.211 | 0.722 |
| *R*, 90 deg | 13.60 | 1.54 | 0.95 | 4.59 | 0.163 | 0.130 |
| *M* | 44.29 | 6.82 | 15.06 | 16.77 | 0.834 | 0.859 |
| Totals | 417.93 | 6.37 | 151.34 | 207.21 | 3.682 | 4.077 |
| **Hoop Direction** | | | | | | |
| *V* | 7.15 | –1.21 | 2.43 | 2.60 | 0.412 | 0.226 |
| *MM* | 88.58 | –10.59 | 30.12 | 33.54 | 1.471 | 1.515 |
| [+/–54]$_3$ | 203.20 | –2.64 | 125.98 | 127.00 | 0.232 | 0.371 |
| *M* | 44.29 | 3.19 | 15.06 | 16.77 | 0.178 | 0.183 |
| *R*, 0 deg | 17.60 | 1.99 | 1.23 | 5.94 | 0.239 | 0.191 |
| *R*, 90 deg | 58.14 | 6.57 | 17.44 | 4.59 | 0.185 | 0.631 |
| *M* | 44.29 | 6.82 | 15.06 | 16.77 | 0.912 | 0.939 |
| Totals | 463.25 | 4.13 | 207.32 | 207.21 | 3.628 | 4.057 |



Copyright ASME International
Provided by IHS under license with ASME
No reproduction or networking permitted without license from IHS Not for Resale

**TABLE M3-4 SUMMARY TABLE OF LAMINATE PROPERTIES**

| Property | Value |
|---|---|
| Thickness | 0.351 in. |
| Glass content | 45.9 % |
| Density | 0.047 lb/cu in. |
| Weight | 2.39 lb/sq ft |
| Axial tensile modulus | (417,930/0.351) = 1,190,684 psi |
| Axial flexural modulus | (4,077/0.0037) = 1,101,892 psi |
| Hoop tensile modulus | (463,250/0.351) = 1,319,801 psi |
| Hoop flexural modulus | (4,057/0.0036) = 1,126,944 psi |
| Shear modulus | (207,210/0.351) = 590,342 psi |
| Axial Poisson's ratio | (151.34/417.93) = 0.36 |
| Hoop Poisson's ratio | (207.32/463.25) = 0.45 |
| Axial $\bar{z}$ | (6.37/417.93) = 0.015 in. |
| Hoop $\bar{z}$ | (4.13/463.25) = 0.009 in. |

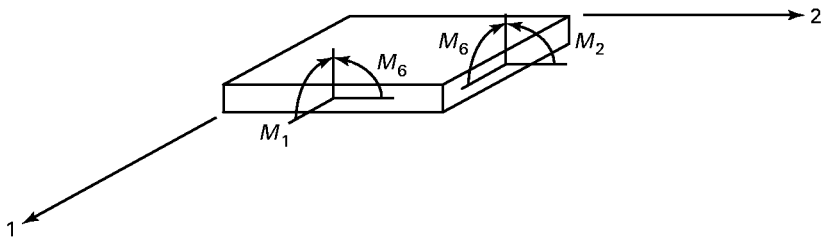


**FIG. M3-14 MOMENT RESULTANTS**

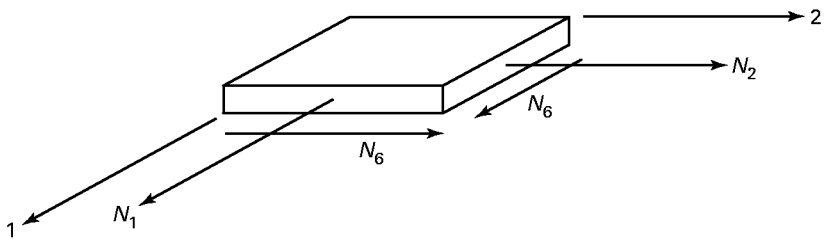


**FIG. M3-15 IN-PLANE FORCE RESULTANTS**



Copyright ASME International
Provided by IHS under license with ASME
No reproduction or networking permitted without license from IHS
Not for Resale

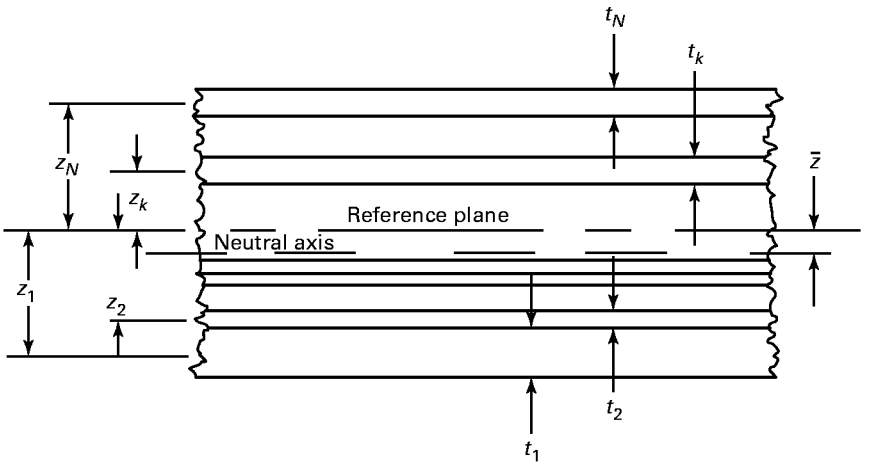


**FIG. M3-16 GEOMETRY OF AN *n*-LAYERED LAMINATE**

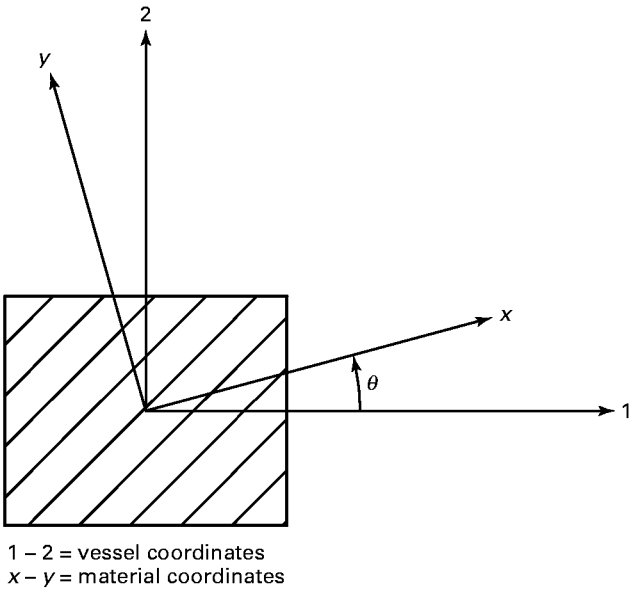


**FIG. M3-17 COORDINATE SYSTEMS**



--`,,,`,,,-`-`,,`,,`,`,,`---
Copyright ASME International
Provided by IHS under license with ASME
No reproduction or networking permitted without license from IHS Not for Resale

# MANDATORY APPENDIX M-4
# QUALITY CONTROL PROGRAM

## M4-100 GENERAL

*(a)* The Fabricator shall have and maintain a Quality Control Program that will assure that all of the requirements of this Standard and any other applicable documents, as agreed between the Fabricator and the User, will be met.

*(b)* The Fabricator must maintain a program suitable for the scope and detail of the work performed, and the size and complexity of the Fabricator's organization. A written description of the program shall be available for review.

*(c)* A copy of the Fabricator's Quality Control Manual shall be made available to the Inspector on request. The Fabricator's Quality Control Manual may contain proprietary information and procedures. No copies of the Fabricator's Quality Control Manual shall be removed from the Fabricator's premises without the Fabricator's express permission. This security permission does not apply to quality control forms and checklists which may be a portion of the Quality Control Manual and are necessary to be used during fabrication to check the fabrication process. These quality control forms become attachments to the Fabricator's Data Report (see Table 1-2).

## M4-200 ORGANIZATION

The Quality Control Program shall include the Fabricator's organization chart, which indicates reporting responsibility and authority. The purpose of this chart is to identify and associate the various organizational groups with the particular function for which they are responsible. The organization chart showing the relationship between management and engineering, purchasing, fabrication, inspection, and quality control is required to reflect the actual organization. This Standard does not intend to encroach on the Fabricator's right to establish, and to alter, whatever form of organization the Fabricator desires, as long as it is appropriate to fulfill the work within this Standard. This chart must illustrate that the quality control function is independent of the production group and marketing group.

## M4-300 DOCUMENTATION

*(a)* The Quality Control Program shall include as a minimum the documentation required by this Standard. These documents must be organized in one place and readily available while fabrication is in progress.

*(b)* The Quality Control Program shall provide for incorporation of procedures that will ensure that the latest applicable drawings, design calculations, specifications, and any Addenda to this Standard are used for fabrication, inspection, and testing.

*(c)* Documentation must be retained by the Fabricator for a minimum of 5 years.

## M4-400 QUALITY CONTROL

The Quality Control Program must include specific procedures for the following.

*(a)* Inspection of received goods, including raw materials and purchased items, i.e., any materials that will become part of the finished vessel.

*(b)* In-process inspection of resin mixing, raw material dispersion, component fabrication, and assembly procedures, including verification of reinforcing sequence (refer to Parts 4 and 6 of this Standard).

*(c)* Scheduling and notification for Inspector's hold points and final acceptance inspection. Refer to paras. 6-300, 1-400, 1-430, and 1-440. Typical inspection events are given in Tables NM7-1 and NM7-2.

*(d)* Inspection of the finished vessel (refer to Parts 4 and 6).

*(e)* Rectifying nonconformities or imperfections, which must be done in accordance with Appendix M-7 and must be recorded on forms included in the Fabricator's Quality Control Program. Minimum data to be recorded shall be date of correction, specific location on the vessel, description of nonconformity or imperfection, method of correction, name of qualified Laminator or Secondary Bonder who made the correction, and signature approvals for each correction in accordance with Appendix M-7 and the Fabricator's Quality Control Program.



Copyright ASME International
Provided by IHS under license with ASME
No reproduction or networking permitted without license from IHS

Not for Resale

*(f)* Maintenance and calibration of all inspection and test equipment.

(b) *(g)* Internal audits of the Quality Control Program. The Certified Individual shall perform the internal audits at the frequency specified in the QC Manual. The maximum interval between audits shall be 14 months (although 6 month intervals are recommended). The first audit must occur no more than 1 year from the date of issuance of the Certificate of Authorization.

*(h)* Assurance that the RTP-1 nameplate information meets the requirements of the UBRS and para. 1-540.

## M4-500 EXAMPLE OF A FABRICATOR'S QUALITY CONTROL PROGRAM

An example of a Fabricator's Quality Control Program is included in Appendix NM-6.



Copyright ASME International
Provided by IHS under license with ASME
No reproduction or networking permitted without license from IHS

Not for Resale

# MANDATORY APPENDIX M-5
# QUALIFICATION OF LAMINATORS AND SECONDARY BONDERS

## M5-100 GENERAL REQUIREMENTS

*(a)* This Appendix specifies the rules for qualifying personnel to produce laminates and/or perform secondary bonding operations. Laminates and overlays thereof (secondary bonds) shall only be made by personnel who have been qualified in accordance with the rules of this Appendix.

*(b)* A *Laminator* is an individual who makes laminates. This is not to preclude assistance being provided to the Laminator by one to four assistants.

*(c)* A *Secondary Bonder* is an individual who joins and overlays cured subassemblies of the vessel being fabricated. This is not to preclude assistance being provided to the Secondary Bonder by one or two assistants.

*(d)* The Fabricator shall maintain up-to-date records relating to qualification of each Laminator and Secondary Bonder. These records will document the date of last qualification, and will include all calculations and test or inspection reports from both internal and independent laboratory testing programs used in the process of qualification. These records are subject to review on request by all parties engaged in the process of procurement or inspection.

## M5-200 RESPONSIBILITY

It is the responsibility of the Fabricator to train and qualify Laminators and Secondary Bonders.

## M5-300 QUALIFICATION OF LAMINATORS

*(a)* Laminators may qualify their capabilities at the time a Fabricator produces a demonstration laminate for the purpose of shop qualification.

(00) *(b)* To qualify, a Laminator must produce one Type II demonstration laminate (see Part 7), fabricated of any polyester or vinyl ester resin, which upon test in accordance with the instructions in Part 7 fulfills the requirements of this Standard. A Laminator Qualification Report, Table M5-1, shall be completed and signed for each laminator qualification.

*(c)* All laminates made for qualification shall be identified in accordance with para. 7-900.

*(d)* Laminators shall be requalified every 3 years or if inactive for 18 months.

*(e)* The Certified Individual may require requalification of a Laminator at any time if there is cause to question the Laminator's ability to produce laminates in accordance with the requirements of this Standard.

## M5-400 QUALIFICATION OF SECONDARY BONDERS

*(a)* Secondary Bonders must qualify their capabilities in accordance with the procedures that follow.

*(b)* It is the responsibility of the Fabricator's Quality Control Manager to:

*(1)* insure compliance with procedures as outlined for the preparation and machining of test samples;

*(2)* make or supervise the making of circumference measurements;

*(3)* make, sign, and date a Secondary Bonder Qualification Report; see Table M5-2. Attached to the Secondary Bonder Qualification Report shall be copies of a Component Data Sheet, including all items listed in Table NM6-2. Two Component Data Sheets are required, one for the pipe test piece, the second for the overlay. The Component Data Sheets shall be appropriately identified.

### M5-410 Making Pipe Test Pieces

*(a)* Three pipe test pieces shall be made by a qualified Laminator utilizing brightly pigmented polyester or vinyl ester resin.

*(b)* The resin must be one that the Fabricator has qualified through the production of a demonstration laminate.

*(c)* Refer to Fig. M5-1 for dimensions of pipe test pieces.

*(d)* The Laminator shall apply a nonpigmented, paraffinated top coat to the pipe exterior.

*(e)* After lamination, application of paraffinated top coat, and cure, the pipe test pieces must be aged at



Copyright ASME International
Provided by IHS under license with ASME
No reproduction or networking permitted without license from IHS

Not for Resale

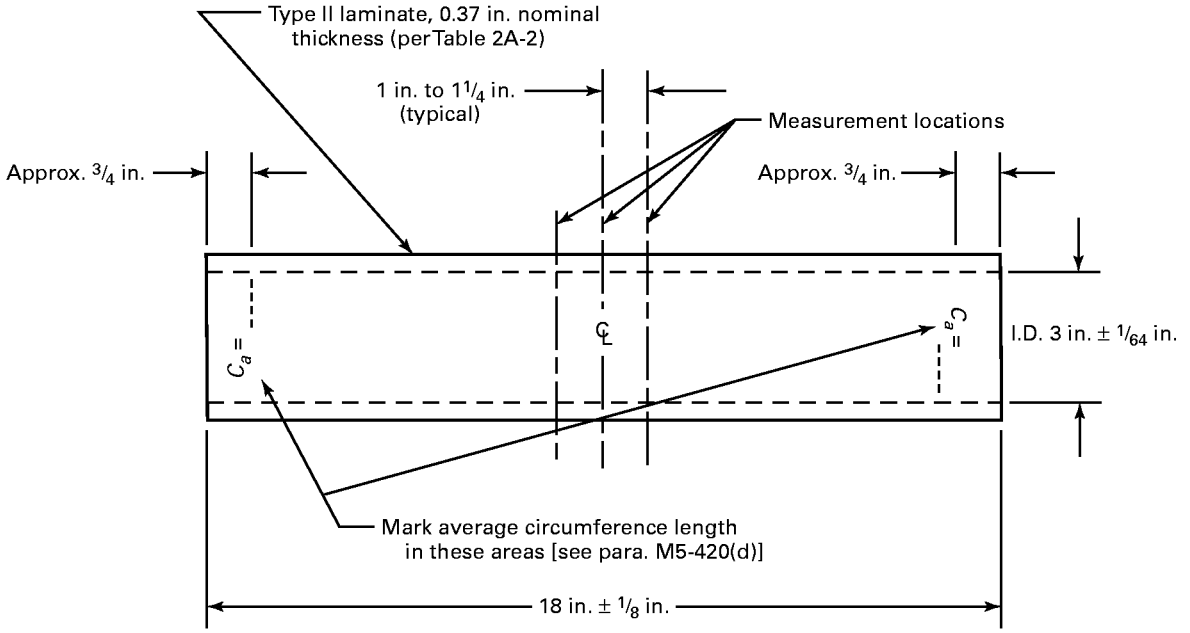


**FIG. M5-1 PIPE TEST PIECE**

70°F to 80°F for at least 72 hr before the Secondary Bonder may begin to make overlays.

## M5-420 Making Secondary Bond Test Assemblies

*(a)* The Secondary Bonder must overlay three pipe test pieces to make three secondary bond test assemblies as illustrated in Fig. M5-2.

*(b)* The Secondary Bonder shall prepare the pipe test pieces for overlay per para. 4-320(a). Care should be taken to maintain an even surface and constant circumference, avoiding removal of excess material that would result in grooves, tapers, or flat spots.

*(c)* After preparation for overlay, the circumference of the area to be overlayed shall be measured using a metal tape measure at the points indicated in Fig. M5-1. This must be done for each of the three pipe test pieces to be overlayed. Measurements must be made in accordance with para. M5-400(b)(2). Measurement accuracy shall be $\pm 1/16$ in. and rounded to the nearest $1/16$ in.

*(d)* For each of three pipe test pieces, the two circumference measurements shall be recorded in the Secondary Bonder Qualification Report. When recording measurements, express the values as the decimal equivalents of the measurements taken. Calculate the average of the two circumference measurements and round it off to the nearest hundredth of an inch; this value is $C_a$. The value of $C_a$ shall be recorded in the report and also marked in $1/2$ in. to $3/4$ in. size numerals, with a black indelible marker, at each end of a pipe test piece. See Fig. M5-1 for approximate locations where the average circumference value $C_a$ is to be marked on each pipe test piece.

*(e)* The Secondary Bonder shall then overlay the three pipe test pieces, following instructions in paras. 4-320(b) through (d), so as to make secondary bond test assemblies as shown in Fig. M5-2. Nonpigmented resin is to be used.

## M5-430 Making and Measuring Secondary Bond Test Specimens

*(a)* After the overlay is cured, and cure is verified per the instructions in para. 6-910, machine the secondary bond test assemblies to make secondary bond test specimens in accordance with Fig. M5-3.

*(b)* Each secondary bond test assembly makes two secondary bond test specimens when cut on the centerline of the overlay.

*(c)* A minimum of five secondary bond test specimens are required to be made for testing.

*(d)* Machining operations may be done by the Fabricator, at another firm or location, or at an independent testing laboratory.



Copyright ASME International
Provided by IHS under license with ASME
No reproduction or networking permitted without license from IHS
Not for Resale

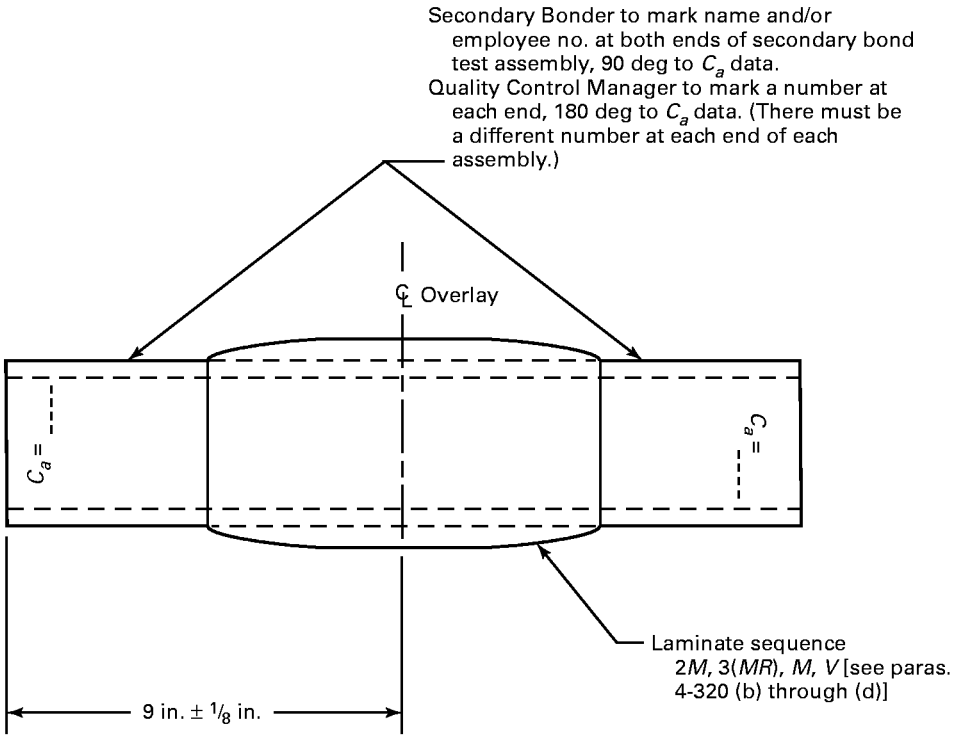


**FIG. M5-2 SECONDARY BOND TEST ASSEMBLY**

## M5-440 Testing Secondary Bond Test Specimens and Calculating Secondary Bond Shear Strength

*(a)* When machining is complete, five secondary bond test specimens must be tested by an independent testing laboratory.

*(b)* Prior to testing, the average engagement height of the shear collar must be determined for each secondary bond test specimen.

*(c)* Measurements and calculations to determine the average engagement height of the shear collar must be done at the independent testing laboratory where the test specimens are to be tested.

*(d)* To determine the average engagement height $H_a$ for each test specimen, proceed as follows.

*(1)* Refer to Fig. M5-3.

*(2)* Using a vernier caliper, make three measurements of the shear collar height $L$ at approximately 120 deg intervals and record the measurements in the Secondary Bonder Qualification Report. The average of the three measurements $L_a$ shall be calculated; the value shall be rounded off to the nearest hundredth of an inch, recorded in the report, and also marked on each test specimen in approximately the area shown in Fig. M5-3. Refer to para. M5-420(d) for marking requirements. Measurement accuracy shall be ±0.010 in.

*(3)* Using a vernier caliper with a depth slide, make three measurements of the relief bore depth $D$ at approximately 120 deg intervals. Follow the same general procedures as in the preceding paragraph for recording measurements, averaging and rounding data to arrive at the average relief bore depth $D_a$, and marking the specimen. Measurement accuracy shall be ±0.010 in.

*(4)* To calculate the engagement height $H_a$ for each test specimen, calculate as follows:

$$H_a = L_a - D_a$$

Record the values of $H_a$ in the Secondary Bonder Qualification Report and mark them on the test specimens in accordance with previous instructions. Testing of specimens may now commence.

*(e)* Specimens must be tested in compression in a laboratory testing machine such that the secondary bond area under the shear collar fails in shear. The crosshead speed shall be 0.05 in./min.



Copyright ASME International
Provided by IHS under license with ASME
No reproduction or networking permitted without license from IHS
Not for Resale

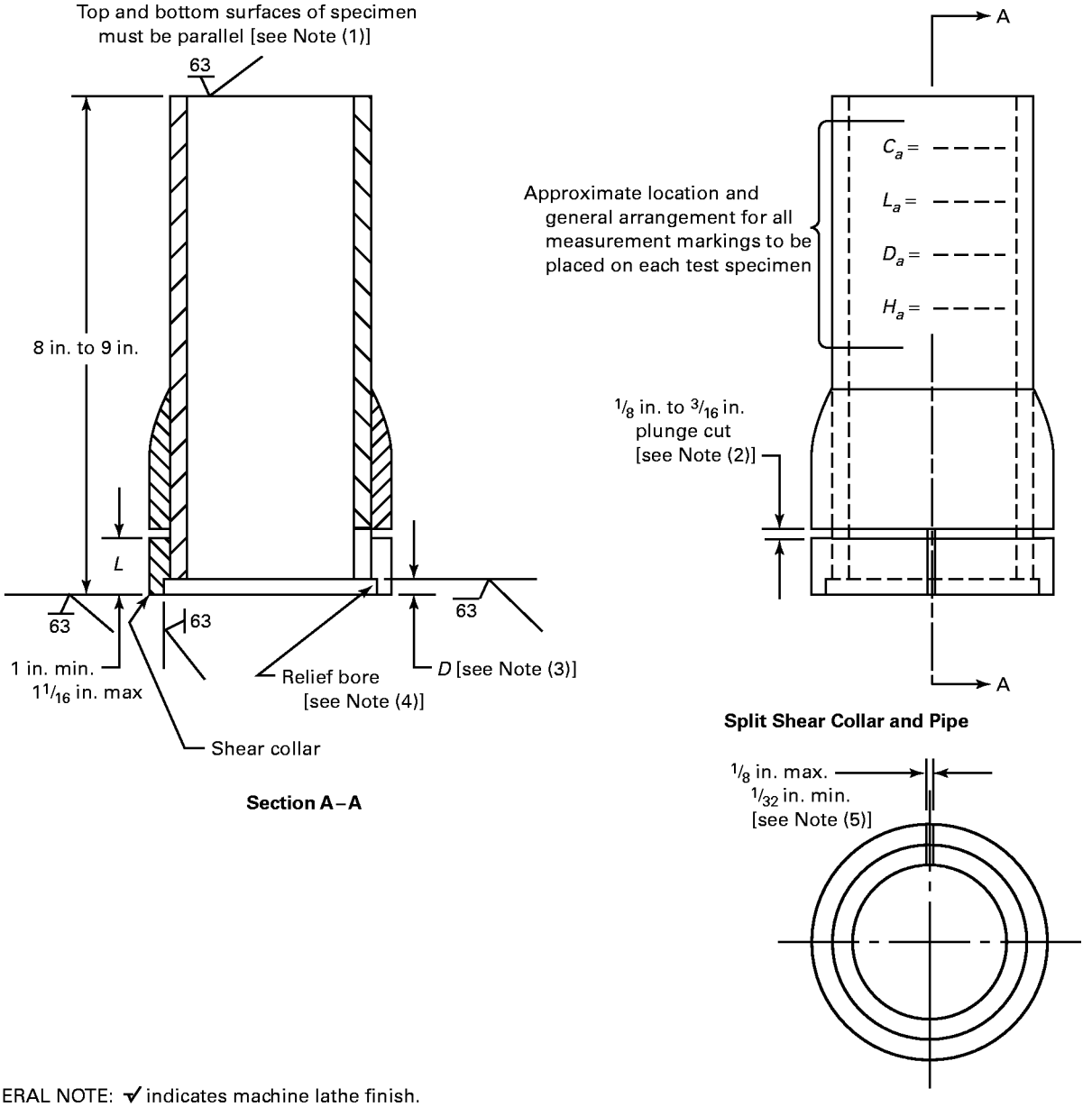


GENERAL NOTE: ✓ indicates machine lathe finish.

NOTES:
(1) Lack of parallelism may reduce test values.
(2) Plunge cut with squared nose parting tool to depth sufficient to expose pigmented laminate a full 360 deg and over total surface of root of slot.
(3) Machine back pipe 1/4 in. minimum to 5/16 in. maximum.
(4) Machine away internal surface of shear collar to be outboard of pipe external surface 3/32 in. minimum, a full 360 deg.
(5) Slit must extend completely through the wall of the shear collar (and pipe) and be of length sufficient to protrude fully into the plunge cut slot.

**FIG. M5-3 SECONDARY BOND TEST SPECIMEN**



Copyright ASME International
Provided by IHS under license with ASME
No reproduction or networking permitted without license from IHS Not for Resale

*(f)* Peak load $P$ is to be recorded for each specimen, rounded off to the nearest 200 lb.

*(g)* Secondary bond shear strength $S_B$ is to be calculated for each test specimen as follows:

$$S_B = \frac{P}{C_a \times H_a}, \text{ lb/in.}^2$$

where

$C_a$ = average circumference of test specimen, in.
$H_a$ = average engagement height, in.
$P$ = peak load at failure, lb

*(h)* The independent testing laboratory shall calculate and report the values of secondary bond shear strength for each test specimen tested.

## M5-450 Requirements for Qualification of Secondary Bonders

*(a)* The secondary bond shear strength of all specimens tested must be greater than or equal to 2,000 psi. Should any sample tested fail to achieve a secondary bond shear strength of 2,000 psi, a complete lot of six new samples must be made and five of these tested, so that all five retest samples achieve 2,000 psi minimum shear value.

*(b)* Secondary Bonders shall be requalified every 3 years or if inactive for 18 months.

*(c)* The Certified Individual may require requalification of a Secondary Bonder at any time if there is cause to question the Secondary Bonder's ability to produce secondary bonds in accordance with the requirements of this Standard.



Copyright ASME International
Provided by IHS under license with ASME
No reproduction or networking permitted without license from IHS
Not for Resale

## TABLE M5-1 LAMINATOR QUALIFICATION REPORT (00)

Data by Fabricator:

Fabricator _____ Laminator _____

Address _____ Last qualification date _____

_____ Lamination date _____

_____ Quality Control Manager _____

Fabrication process _____ Resin type _____

Laminate type _____ Catalyst type _____

Data by Test Laboratory:

Test laboratory _____ Test report no. _____

Lab technician _____ Testing date _____

| Specimen Number | Specimen Thickness | Specimen Width | Test Speed | Peak Load | $S_x$ | $S_y$ | $E_x$ | $E_y$ |
|---|---|---|---|---|---|---|---|---|
| 1 | | | | | | | | |
| 2 | | | | | | | | |
| 3 | | | | | | | | |
| 4 | | | | | | | | |
| 5 | | | | | | | | |
| | | | | Average | | | | |

Type II laminates require properties in the warp direction only.

Test laboratory representative _____ Date _____
(signature)

Certification:

The Laminator whose name appears above is qualified under the provisions of RTP-1, Part 7 and Mandatory Appendix M-5.

Quality Control Manager _____ Date _____
(signature)

Laminator _____ Date _____
(signature)

GENERAL NOTES:
(a) This form may be reproduced and used without written permission from ASME if used for purposes other than republication.
(b) Attach copies of Table NM6-2 (Component Data Sheet) and laboratory test report to this Laminator Qualification Report.



Copyright ASME International
Provided by IHS under license with ASME
No reproduction or networking permitted without license from IHS Not for Resale

(00)

## TABLE M5-2 SECONDARY BONDER QUALIFICATION REPORT

Fabricator _____ Secondary Bonder _____

Address _____ Last qualification date _____

_____ Secondary bonding date _____

Quality Control Manager _____ Test laboratory _____

Qualified Laminator _____ Lab technician _____

Pipe fabrication date _____ Testing date _____

Data by Fabricator:

| Specimen Number | Pipe Circumferences | | |
|---|---|---|---|
| | $C_1$ | $C_2$ | $C_a$ |
| | | | |
| | | | |
| | | | |
| | | | |
| | | | |

$H_a = L_a - D_a$

$S_b = \dfrac{P}{C_a H_a}$ (minimum allowable = 2,000 psi)

Data by Test Laboratory:

Test laboratory representative _____ Date _____

(signature)

| Specimen Number | Shear Collar Height | | | | Relief Bore Depth | | | | Shear Height $H_a$ | Peak Load $P$ | Shear Strength $S_b$ |
|---|---|---|---|---|---|---|---|---|---|---|---|
| | $L_1$ | $L_2$ | $L_3$ | $L_a$ | $D_1$ | $D_2$ | $D_3$ | $D_a$ | | | |
| | | | | | | | | | | | |
| | | | | | | | | | | | |
| | | | | | | | | | | | |
| | | | | | | | | | | | |
| | | | | | | | | | | | |

The following certify that they have executed their responsibilities and tests in accordance with the requirements of ASME RTP-1, para. M5-400:

Secondary Bonder _____ Date _____

(signature)

Quality Control Manager _____ Date _____

(signature)

Secondary Bonder ☐ is qualified ☐ is not qualified

GENERAL NOTES:

(a) This form may be reproduced and used without written permission from ASME if used for purposes other than republication.

(b) Attach copies of Table NM6-2 (Component Data Sheet) to this Secondary Bonder Qualification Report. One Component Sheet is to apply to the pipe test piece per Fig. M5-1; the other is to apply to the overlay per Fig. M5-2. Identify each Component Data Sheet accordingly.



Copyright ASME International
Provided by IHS under license with ASME
No reproduction or networking permitted without license from IHS
Not for Resale

# MANDATORY APPENDIX M-6
# DEMONSTRATION VESSEL

## M6-100 GENERAL

Fabricators shall design, fabricate, and satisfactorily test a demonstration vessel in accordance with the instructions contained in this Appendix.

The design and fabrication of the demonstration vessel require a comprehensive understanding of this Standard by the Fabricator. They involve a full demonstration of the Fabricator's ability to design, execute drawings, qualify demonstration laminates, establish design values from design basis laminates, qualify Laminators and Secondary Bonders, and fabricate under effective overview of the Fabricator's Quality Control Program, all in full accordance with the requirements of this Standard.

No Fabricator shall claim qualification to fabricate to this Standard until having satisfactorily completed and tested the demonstration vessel in accordance with the instructions herein.

## M6-200 PRELIMINARY REQUIREMENTS

Prior to designing or constructing the demonstration vessel, the Fabricator must complete all of the following requirements.

*(a)* The Fabricator shall have developed a written Quality Control Program in full accordance with the requirements of Appendix M-4. Demonstration of the effectiveness of the program is suggested on several jobs in the shop prior to construction of the demonstration vessel.

*(b)* The Fabricator shall have constructed and shall have successfully completed testing of demonstration laminates and design basis laminates of those laminate types and that resin specified by the UBRS for the demonstration vessel (see Part 7 for requirements of demonstration laminates).

*(c)* The Fabricator shall have trained and qualified those Laminators and Secondary Bonders who will construct the demonstration vessel (see Appendix M-5).

## M6-300 DESIGN, FABRICATION, AND TESTING OF THE DEMONSTRATION VESSEL

Design and drafting requirements must be demonstrated by the Fabricator in full accordance with this Standard.

All instructions for fabrication and testing of the demonstration vessel are contained in the UBRS identified as Table M6-1.

## M6-400 REQUIREMENTS SUBSEQUENT TO TESTING

*(a)* Subsequent to completion of successful testing, the Fabricator shall section (cut) the demonstration vessel to reveal details and the integrity of laminates and secondary bonds. Instructions for sectioning are included in the UBRS. The Fabricator may polish or grind the cut edges, but no resin, resin putty, or any other material is to be applied to such cut edges.

*(b)* The *quadrant* sectioned from the demonstration vessel may be retained or disposed of by the Fabricator, at the Fabricator's option.

*(c)* The three-quarter section from the demonstration vessel shall be placed on display at the Fabricator's shop for viewing by prospective customers. No paints, coloration, or pigmentation shall be applied to the demonstration vessel.

*(d)* Subsequent to the completion of successful testing, the Fabricator shall execute a Fabricator's Data Report (see Table 1-2). Attached to the Data Report shall be all information required by the Data Report, plus the following additional items:

*(1)* a copy of the Witness of Hydrotest form (see Fig. M6-3);

*(2)* certified test reports of all required demonstration and design basis laminates [see para. M6-200(b)];

*(3)* certified test reports covering the qualification of Laminators and Secondary Bonders [see para. M6-200(c) and Appendix M-3];

*(4)* a photograph of the sectioned demonstration vessel.



Copyright ASME International
Provided by IHS under license with ASME
No reproduction or networking permitted without license from IHS
Not for Resale

All of the above shall be organized and bound as a single document. The Fabricator may reproduce as many copies of this document as desired.

*(e)* At least one copy of the document described in (d) above shall be available at the place of display of the demonstration vessel.



Copyright ASME International
Provided by IHS under license with ASME
No reproduction or networking permitted without license from IHS

Not for Resale

## TABLE M6-1 USER'S BASIC REQUIREMENTS SPECIFICATION (UBRS) (00)
## As Required by the Provisions of ASME RTP-1



RTP Edition No._____

UBRS Revision No._____

User firm name For display at Fabricator's shop

User's Agent firm name Not applicable

Title of equipment ASME RTP-1 demonstration vessel

User's designation no. ASME RTP-1 A1

Installation location (name and address) Fabricator's shop

UBRS prepared by (User or User's Agent):

Name Mandatory Appendix M-6, ASME RTP-1 Phone no. Not applicable Date 3/8/02

Address

1. Equipment description (equipment sketch and nozzle schedule must be attached):

   Storage vessel

2. Additional Fabricator responsibilities:
   - [ ] Special requirements
     - [ ] Acoustic emission testing
     - [x] Inspection or testing requirements not listed in the Standard Special, fully flooded (all air vented off), ambient temp. water, proof hydrotest at 44 psig max. Test to be witnessed by a registered Professional Engineer. Fig. M6-3, the Witness of Hydrotest form, is required to be filled out.
     - [ ]
     - [ ]
   - [ ] Visual inspection acceptance level (refer to Table 6-1 of ASME RTP-1):
     - [ ] Level 1
     - [x] Level 2

     Quantity limitations for gaseous air bubbles or blisters



--`,,`,,`-`-`,,`,,`,`,,`---

Copyright ASME International
Provided by IHS under license with ASME
No reproduction or networking permitted without license from IHS Not for Resale

(00) **TABLE M6-1 USER'S BASIC REQUIREMENTS SPECIFICATION (UBRS) (CONT'D)**
**As Required by the Provisions of ASME RTP-1**



RTP Edition No._____

UBRS Revision No._____

[ ] Additional inspection aids/methods [refer to para. 6-940(c) of ASME RTP-1] _____

3. Material selection

3.1 Material selection by:

[ ] Resin manufacturer (include data per section 4 of this document)

[ ] Fabricator (include data per section 4 of this document)

[ ] End User. Applicable User's specifications/standards, codes, ordinances, FDA requirements, etc. (list and specify; attach copies of local code/ordinance requirements) _____

[x] Other As required by Mandatory Appendix M-6

3.2 Material of construction:

Resin Clear chlorendic polyester Catalyst/cure system CoNap/MEKP

Veil Fiberglass surfacing veil Barcol hardness per para. 6-910(b)(4) NA

[ ] Lift lugs: [ ] RTP [ ] Carbon steel [ ] Other _____

[x] Hold down lugs: [x] RTP [ ] Carbon steel [ ] Other _____

4. Chemical service data (must be provided when Fabricator or resin manufacturer is making material selection) _____

4.1 Description of process function and process sequence: Not applicable

4.2 Contents:

| Chemical Name | Concentration Max. % | Concentration Min. % | Exposure Time |
|---|---|---|---|
| Potable water | 100 | 100 | Continuous |
| | | | |
| | | | |
| | | | |

4.3 pH range: _____ max. _____ min.

5. Design

5.1 Design conditions:

| | Operating | Design |
|---|---|---|
| Internal pressure | 14 psig | 15 psig |
| External pressure | 0.0 psig | 0.0 psig |
| Temperature | 80°F | 150°F |
| Specific gravity | 1.0 | 1.0 |
| Liquid level | Full | Full |



Copyright ASME International
Provided by IHS under license with ASME
No reproduction or networking permitted without license from IHS
Not for Resale

**TABLE M6-1 USER'S BASIC REQUIREMENTS SPECIFICATION (UBRS) (CONT'D)** (00)
**As Required by the Provisions of ASME RTP-1** (b)



RTP Edition No._____

UBRS Revision No._____

Wind load 0 mph Elevation above grade _____ Exposure _____
Wind code/year _____ [ ] ASCE 7- _____ [ ] UBC_____ [ ] Other _____
Snow load 0 psf Seismic zone 1 Site-specific seismic information _____
Seismic code/year _____ [ ] ASCE 7- _____ [ ] UBC_____ [ ] Other _____
Capacities: Operating Flooded gal
Flooded By Fabricator gal

5.2 Agitation:
Dead load _____ lb
Bending moment _____ ft-lb
Torque _____ ft-lb
Horsepower_____ hp
Impeller speed_____ RPM
Impeller diameter _____ in.
Number of impellers _____
Foot bearing: [ ] Yes [ ] No

5.3 *Heating and cooling:*
[ ] Electric panels
[ ] Steam coil
[ ] Steam sparger
[ ] Heat exchanger
[x] Other Not applicable

5.4 *Mechanical and other forces:*
[ ] Violent chemical reaction
[ ] Subsurface introduction of gas or vapor
[ ] Subsurface introduction of steam
[ ] Transmitted mechanical load/force
[ ] Impact due to introduction of solids
[ ] *Vacuum from pump down (or vessel draining)*
[ ] Vacuum from cool down
[x] Other Not applicable

5.5 Corrosion barrier excluded from structural calculations:
[ ] Yes
[x] No

5.6 Declaration of *critical service* (only by User or User's Agent; refer to para. 1-210 of ASME RTP-1):
[ ] Yes
[x] No

6. Designation of Inspector (Review paras. 1-400, 1-430, and 1-440 of ASME RTP-1. It must be recognized that ASME RTP-1 establishes numerous duties for the Inspector, which necessitates that the Inspector be present in the fabrication shop throughout a major portion of the fabrication interval.). Inspector shall be:
[x] Fabricator's Quality Control principal
[ ] User's representative
[ ] Other



Copyright ASME International
Provided by IHS under license with ASME
No reproduction or networking permitted without license from IHS
Not for Resale

(00) **TABLE M6-1 USER'S BASIC REQUIREMENTS SPECIFICATION (UBRS) (CONT'D)**
**As Required by the Provisions of ASME RTP-1**



RTP Edition No._____

UBRS Revision No._____

Inspector's name _____ Telephone _____

Company _____

Address _____

_____

6.1 Approval of Inspector designation

6.1.1 Authorized User's representative:

Name _____ Title _____

Signature _____ Date _____

6.1.2 Authorized Fabricator's representative:

Name _____ Title _____

Signature _____ Date _____

Additional requirements: Dimensional tolerances per Fig. NM7-1 are specified as mandatory.

All gaskets to be full faced, $\frac{1}{8}$ in. Neoprene at 60±5 Shore A durometer.

All bolts to be B8 or B7 studs, or A 307 Grade B bolts.

GENERAL NOTE: This form may be reproduced and used without written permission from ASME if used for purposes other than republication.



Copyright ASME International
Provided by IHS under license with ASME
No reproduction or networking permitted without license from IHS
Not for Resale

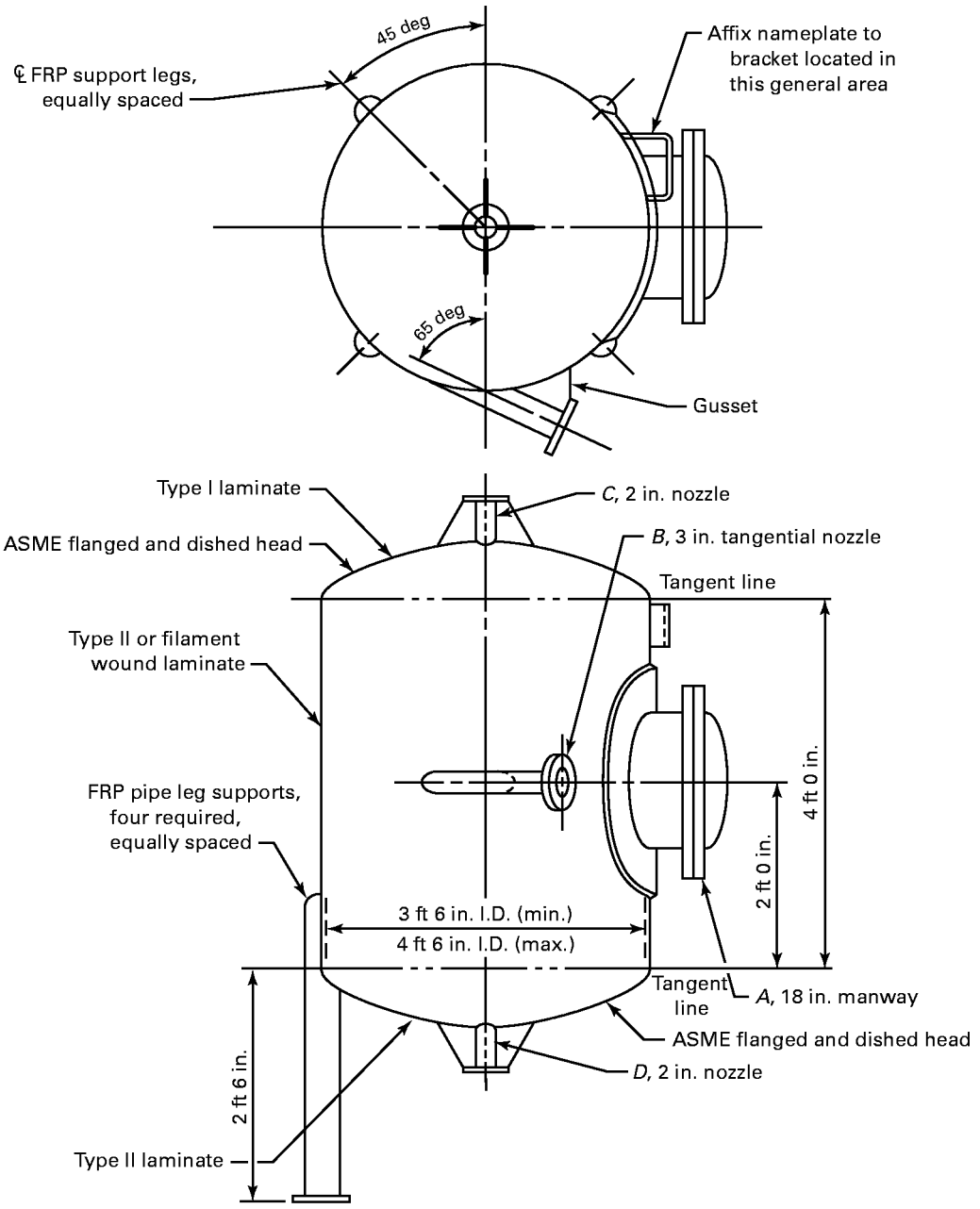


GENERAL NOTE: Laminate thicknesses are to be based on design pressure and temperature, and laminates are to be of the type specified here. See UBRS.

**FIG. M6-1 ASME RTP-1 DEMONSTRATION VESSEL**



--`,,`,,`-`-`,,`,,`,`,,`---
Copyright ASME International
Provided by IHS under license with ASME
No reproduction or networking permitted without license from IHS Not for Resale

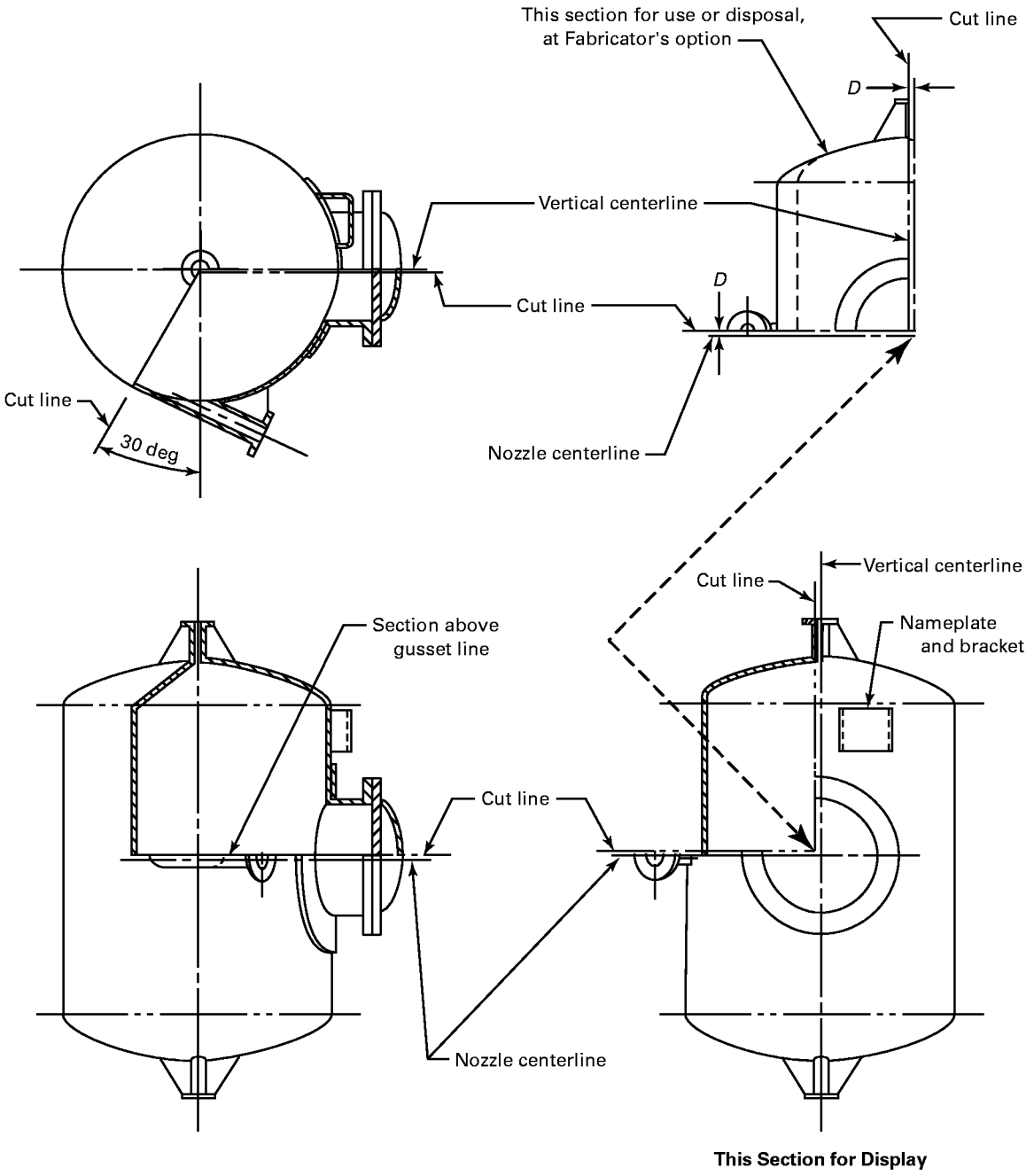


$D$ = distance from centerline to cut line to be held to a practical minimum so as to clear the body and edge of the gusset with the cut

**FIG. M6-2 POST-TEST SECTIONING OF VESSEL FOR FINAL INSPECTION AND DISPLAY**



Copyright ASME International
Provided by IHS under license with ASME
No reproduction or networking permitted without license from IHS
Not for Resale

**Witness of Hydrotest**
**ASME RTP-1 Demonstration Vessel**

On this date _____ (month/day/year) the following parties do certify by their signatures that they have witnessed a hydrostatic test of the RTP demonstration vessel as constructed by:

Fabricator's name _____

Address _____

_____

_____

and that this vessel did successfully contain the hydrostatic test pressure of 45 psig for 2 hours without leakage or cracking of any of its parts.

(a) Fabricator's Inspector's signature _____ (signature)

_____ (print name)

(b) Professional Engineer's signature (and seal):

_____ (signature)

_____ (print name)

(c) Fabricator's authorized agent _____

GENERAL NOTES:
(a) This form may be reproduced and used without written permission from ASME if used for purposes other than republication.
(b) Attach this witness form directly to the Fabricator's Data Report (Table 1-2).
(c) An acceptable test pressure range is 44 psig to 46 psig.

**FIG. M6-3 WITNESS OF HYDROTEST OF ASME RTP-1 DEMONSTRATION VESSEL (Attachment No. 3)**



Copyright ASME International
Provided by IHS under license with ASME
No reproduction or networking permitted without license from IHS Not for Resale

# MANDATORY APPENDIX M-7
# REPAIR PROCEDURES

## M7-100 SCOPE

This Appendix sets forth general criteria and repair procedures that are to be used to correct nonconformities in vessels before they are accepted as complying with this Standard and/or before they are placed into service.

## M7-200 GENERAL CONDITIONS

In general, when a defective or damaged laminate is to be repaired, the total sequence of laminate construction removed by the grinding process must be replaced by a laminate sequence that shall provide structural properties meeting the requirements of this Standard. It is required that the repaired area have the same physical strength and chemical resistance characteristics as the specified original laminate.

## M7-210 Nonconformities

Vessels fabricated to this Standard may be repaired to correct nonconformities detected prior to being placed into service, provided all of the following conditions are met.

*(a)* The nonconformities must be classified as repairable as indicated in para. M7-300.

*(b)* The repair procedures used must be in accordance with one or more of those outlined in paras. M7-600 through M7-663.

*(c)* All repair procedures must be accepted in advance by the Inspector. If structural repairs are necessary, the registered Professional Engineer must also concur.

*(d)* The amount of repaired area does not exceed the limitations set forth in Table 6-1.

*(e)* Repairs are done by a qualified Secondary Bonder employed by either the original vessel Fabricator or his/her designated agent.

*(f)* All repairs are to be reinspected by the Inspector to ensure compliance with this Standard.

## M7-220 Incorrectly Placed/Sized Attachments

Any vessel repairs that are necessary because of incorrect size or placement of nozzles or other attachments as required by the User must also meet all the conditions set forth in para. M7-210.

## M7-300 REPAIRS TO CORRECT NONCONFORMITIES

The following nonconformities shall be considered repairable by procedures outlined in this Appendix:

*(a)* all imperfections within the inner surface or interior layer as defined by Table 6-1;

*(b)* low Barcol hardness levels, provided they are correctable by postcuring;

*(c)* acetone sensitivity of nonmolded surfaces and the outside of secondary bond overlays;

*(d)* all imperfections within the structural layer as defined by Table 6-1;

*(e)* underthickness and/or understrength of the vessel structural laminate or secondary bond overlays, provided the correct laminate sequence was followed;

*(f)* incorrect size or placement of vessel nozzles or attachments;

*(g)* nonconformities that result in leakage during the hydrostatic test.

A hydrostatic test is required after the correction of nonconformities described in (d) through (g) above.

## M7-310 Unrepairable Nonconformities

The following nonconformities shall not be considered repairable by procedures outlined in this Appendix. A vessel that has any one of these nonconformities shall not be certified as being fabricated in accordance with this Standard:

*(a)* incorrect materials of laminate construction, such as resins, curing agents, glass reinforcements, etc.;

*(b)* incorrect structural laminate sequence;

*(c)* incorrect laminate construction and thickness of the inner surface and interior layer;

*(d)* incorrect wind angle for filament wound vessels;



Copyright ASME International
Provided by IHS under license with ASME
No reproduction or networking permitted without license from IHS

Not for Resale

*(e)* out-of-roundness in excess of that permitted by Fig. 4-1;

*(f)* low Barcol hardness levels uncorrectable by post-curing;

*(g)* vessel dimensions such as diameter, height, head radius, etc., that are not in compliance with the basic vessel design calculations and the UBRS.

## M7-400 CLASSIFICATION OF REPAIRS

Vessel repairs shall be classified into the following types:

*(a)* Type 1 — inner surface repairs;

*(b)* Type 2 — interior layer repairs;

*(c)* Type 3 — structural layer repairs;

*(d)* Type 4 — dimensional nonconformance repairs;

*(e)* Type 5 — miscellaneous general repairs due to acetone sensitivity or low Barcol readings;

*(f)* Type 6 — repairs due to nonconformance with the User's dimensional requirements.

Each type of repair shall have its own corresponding general repair procedure as given in paras. M7-600 through M7-663.

## M7-500 ORDER OF REPAIRS

In cases where repairs due to damage are necessary to both the structural layer and the corrosion barrier, the repairs to the structural layer shall be performed first, followed by repairs to the corrosion barrier, unless otherwise accepted by the Inspector and approved by the registered Professional Engineer.

## M7-600 REPAIR PROCEDURES

### M7-610 Type 1 —Inner Surface Repairs

**M7-611 General.** Repairs will generally involve removing the inner surface (surfacing veil) by grinding in order to remove nonconformities such as pits, inclusions, blisters, or air voids. Repairs can be accomplished by adding back the correct inner surface material as specified in the Fabricator's design drawings.

**M7-612 Materials.** Repairs shall be made with the same type of resin and reinforcement materials used to fabricate the original vessel inner surface. All laminate shall be in accordance with Part 2.

**M7-613 Repair Personnel.** Repairs shall be made by qualified Secondary Bonders.

**M7-614 Repair Procedure**

*(a)* The area to be repaired shall be determined. The percentage of repair area shall not exceed the limitations given in Table 6-1.

*(b)* Areas adjacent to the repair shall be protected to prevent damage during the repair operation.

*(c) Surface Preparation*

*(1)* The area to be repaired shall be ground on the surface with a 60 to 80 grit disk on a power grinder to remove all nonconformities. The ground area shall not be gouged out, but tapered out uniformly to the surface of adjacent unrepaired laminate. Only cured laminate shall be ground. Final grinding shall be done with a new disk surface to assure a good surface profile for secondary bonding. Care shall also be taken not to remove more than the inner surface unless necessary to remove all of the nonconformity. If any of the backup layers of chopped strand mat are removed, a Type 2 repair procedure shall be utilized as given in paras. M7-620 through M7-625.

*(2)* The grinding dust from the ground surface shall be removed with a clean brush. If secondary bonding is not started soon after brushing the surface clean, the cleaning procedure shall be repeated just prior to applying the repair laminate.

*(d)* A new inner surface shall be applied as specified in the Fabricator's design drawings. Prior to applying the new veil or veils, the ground area shall be wetted with catalyzed resin.

*(e)* After the inner surface has been applied and properly rolled out, a final topcoat of paraffinated resin shall be applied.

**M7-615 Acceptance Inspection.** The repaired areas shall meet the requirements of Table 6-1.

After allowing the paraffinated topcoat to cure, the Barcol hardness and acetone sensitivity shall be checked. Postcuring of the repaired area is acceptable to achieve the required Barcol hardness.

### M7-620 Type 2 —Interior Layer Repairs

**M7-621 General.** Repairs will require removing both inner surface and interior layer laminate by grinding in order to remove nonconformities such as entrapped air, blisters, inclusions, cracks, dry spots, etc. Repairs can be accomplished by adding back the correct inner surface and interior layer laminate as specified in the Fabricator's design drawings.



Copyright ASME International
Provided by IHS under license with ASME
No reproduction or networking permitted without license from IHS
Not for Resale

**M7-622 Materials.** Repairs shall be made with the same type of resin and reinforcement materials used to fabricate the original vessel inner surface and interior layer. All laminate shall be in accordance with Part 2.

**M7-623 Repair Personnel.** Repairs shall be made by qualified Secondary Bonders.

### M7-624 Repair Procedure

*(a)* The area to be repaired shall be determined. The percentage of repair area shall not exceed the limitations given in Table 6-1.

*(b)* Areas adjacent to the repair shall be protected to prevent damage during the repair operation.

*(c) Surface Preparation*

*(1)* The area to be repaired shall be ground with an 80 grit or coarser disk on a power grinder to remove all nonconformities. The ground area shall not be gouged out, but tapered out uniformly to the surface of adjacent unrepaired laminate. Only cured laminate shall be ground. Final grinding shall be done with a new disk surface to assure a good surface profile for secondary bonding.

*(2)* The grinding dust from the ground surface shall be removed with a clean brush. If secondary bonding is not started soon after brushing the surface clean, the cleaning procedure shall be repeated just prior to applying the repair laminate.

*(d)* A new inner surface and interior layer shall be applied as specified in the Fabricator's design drawings. This shall involve a minimum of two layers of $1\frac{1}{2}$ oz/sq ft chopped strand mat and one layer of surfacing veil. Prior to applying the new laminate, the ground area shall be wetted with catalyzed resin.

*(e)* After all required laminate has been applied, cured, inspected, and accepted, the area shall be lightly sanded to remove sharp projections and feather edges. The repaired area shall be topcoated with paraffinated resin.

**M7-625 Acceptance Inspection.** The repaired area shall meet the requirements of Table 6-1.

After allowing the paraffinated topcoat to cure, the Barcol hardness and acetone sensitivity shall be checked. Postcuring of the repaired area is acceptable to achieve the required Barcol hardness.

## M7-630 Type 3 — Structural Layer Repairs

**M7-631 General.** Repairs will involve removing structural material by grinding. However, the approach to repair will vary depending on type of nonconformity, location, and relationship to nozzles, supports, etc. The registered Professional Engineer shall specify any special precautions or considerations needed for a particular repair.

**M7-632 Materials.** Repairs shall be made with the same type of resin and reinforcement materials used to fabricate the original vessel structural layers. Hand lay-up laminate shall be used to repair filament wound vessels (see para. M7-634). All laminate shall be in accordance with Part 2.

**M7-633 Repair Personnel.** Repairs shall be made by qualified Secondary Bonders.

### M7-634 Repair Specification

*(a)* The registered Professional Engineer shall specify the surface area and shape of area to be disturbed for repair.

*(b)* Any extra material required to effect a proper repair above that removed by grinding will be determined and specified by the registered Professional Engineer. The required laminate sequence shall be used.

*(c)* For repair of nonconformities in filament wound structural layers, the complete hand lay-up laminate sequence shall be specified by the registered Professional Engineer.

### M7-635 Repair Procedure

*(a)* The area to be repaired shall be determined. The percentage of repair area shall not exceed the limitations given in Table 6-1.

*(b)* Areas adjacent to the repair shall be protected to prevent damage during the repair operation.

*(c) Surface Preparation*

*(1)* The area to be repaired shall be ground with a 36 grit or coarser disk on a power grinder. The ground area shall not be gouged out, but tapered out uniformly from the root of the nonconformity being repaired. Only cured laminate shall be ground. Final grinding shall be done with a new disk to assure a good surface profile for secondary bonding.

*(2)* The grinding dust from the ground surface shall be removed using a clean brush. If secondary bonding is not started soon after brushing the surface clean, the cleaning procedure shall be repeated just prior to applying the laminate.

*(d)* Hand lay-up laminate shall be applied in the same sequence of construction as removed in the grinding process and as specified by the registered Professional Engineer. The laminate sequence shall be started by wetting the ground surface with catalyzed resin. The first layer of the laminate shall be $1\frac{1}{2}$ oz/sq ft chopped strand mat.



Copyright ASME International
Provided by IHS under license with ASME
No reproduction or networking permitted without license from IHS

Not for Resale

*(e)* After all required laminate has been applied, cured, inspected, and accepted, the area shall be lightly sanded to remove sharp projections and feather edges. The repaired area shall be topcoated with paraffinated resin.

**M7-636 Acceptance Inspection.** Structural repairs shall meet the requirements of Table 6-1.

After allowing the paraffinated topcoat to cure, the Barcol hardness and acetone sensitivity shall be checked. Postcuring of the repaired area is acceptable to achieve the required Barcol hardness.

## M7-640 Type 4 —Dimensional Nonconformance Repairs

**M7-641 General.** Repairs due to dimensional nonconformance will include underthickness of shells or heads, nozzles, flanges, secondary bonds, etc. Repairs shall be done by adding additional laminate of the correct sequence specified in the Fabricator's design drawings.

**M7-642 Materials.** Repairs shall be made with the same type of resin and reinforcement materials used to fabricate the original vessel. Hand lay-up laminate shall be used to repair both filament wound and contact molded vessels. The registered Professional Engineer shall specify any additional thickness of hand lay-up laminate to be added to a filament wound shell. All laminate shall be in accordance with Part 2.

**M7-643 Repair Personnel.** Repairs shall be made by qualified Secondary Bonders.

### M7-644 Repair Procedure

*(a)* The area to be repaired shall be determined. The percentage of repair area shall not exceed the limitations given in Table 6-1.

*(b)* Areas adjacent to the repair shall be protected to prevent damage during the repair operation.

*(c) Surface Preparation*

*(1)* The area to be repaired shall be ground on the surface with a 36 grit or coarser disk on a power grinder. The ground area shall not be gouged out, but tapered out uniformly to the surface of adjacent unrepaired laminate. Only cured laminate shall be ground. Final grinding shall be done with a new disk surface to assure a good surface profile for secondary bonding.

*(2)* The grinding dust from the ground surface shall be removed using a clean brush. If secondary bonding is not started soon after brushing the surface clean, the cleaning procedure shall be repeated just prior to applying the repair laminate.

*(d)* Hand lay-up laminate shall be applied in the correct laminate sequence specified in the Fabricator's design drawings and as specified by the registered Professional Engineer. The laminate sequence shall be started by wetting the ground surface with catalyzed resin. The first layer of the laminate shall be $1\frac{1}{2}$ oz/sq ft chopped strand mat.

*(e)* After all required laminate has been applied, cured, inspected, and accepted, the area shall be lightly sanded to remove sharp projections and feather edges. The repaired area shall be topcoated with paraffinated resin.

**M7-645 Acceptance Inspection.** The repaired area shall meet the requirements of Table 6-1.

After allowing the paraffinated topcoat to cure, the Barcol hardness and acetone sensitivity shall be checked. Postcuring of the repaired area is acceptable to achieve the required Barcol hardness.

## M7-650 Type 5 —Undercured Laminate Repairs

**M7-651 General.** Undercured laminate will cause low Barcol readings or acetone sensitivity at the surface. Repairs will require postcuring the affected laminate or re-topcoating the surface of the acetone-sensitive laminate.

**M7-652 Materials.** Laminates involving re-topcoating shall be repaired with the same type of paraffinated resin used on the original laminate.

**M7-653 Repair Personnel.** All repairs shall be made by qualified Secondary Bonders.

**M7-654 Repair Procedure to Correct Low Barcol Readings.** The laminate giving low Barcol readings shall be heat postcured in accordance with the resin manufacturer's recommendations for maximum temperature versus time of cure. It is recommended that the vessel be placed in a circulating hot air oven for this purpose. The use of portable hot air blowers or exhaust steam (no pressure) shall also be permitted. The temperature of the laminate shall be monitored during the postcure to assure the proper temperature is maintained.

**M7-655 Acceptance Inspection.** After postcuring and the laminate has cooled to room temperature, the Barcol readings shall be taken again. Where postcuring does not produce high enough Barcol readings, the laminate shall be unacceptable. If the area of the



Copyright ASME International
Provided by IHS under license with ASME
No reproduction or networking permitted without license from IHS
Not for Resale

laminate which has low Barcol readings is within the limits of repairability given in Table 6-1, it may be repaired using Type 1 or Type 2 repair procedures set forth in paras. M7-610 through M7-625.

### M7-656 Repair Procedure to Correct Acetone Sensitivity

*(a)* The exterior of the laminate showing sensitivity to acetone shall be lightly sanded to remove sharp projections and feather edges and previously applied paraffinated resin.

*(b)* Next, the sanded area shall be re-topcoated with paraffinated catalyzed resin. If the sanding removes any part of the surfacing veil, an additional ply of surfacing veil shall also be applied along with the topcoat of paraffinated catalyzed resin. Care shall be taken during application of the topcoat to minimize the coverage of adjacent unsanded areas.

**M7-657 Acceptance Inspection.** After allowing the paraffinated topcoat to cure, the acetone sensitivity shall be checked. If the repaired area remains acetone sensitive, it is unacceptable.

## M7-660 Type 6 –User's Dimensional Nonconformance Repairs

**M7-661 General.** Repairs due to nonconformance with the dimensional requirements include the misplacement of nozzles or attachments and the incorrect size of nozzles or attachments.

**M7-662 Materials.** All materials used to correct User's nonconformance with User's dimensional requirements shall be the same type of resin and reinforcement materials used to fabricate the original vessel. Further, the construction of new nozzles or attachments shall follow the specifications given in the original Fabricator's design drawing and be in accordance with Part 4 of this Standard. All laminates shall also be in accordance with Part 2.

### M7-663 Repair Procedure for Attachments and Other Nonpenetrating Parts

*(a)* Provided that the attachment or vessel part is attached only to the outside structural layer of the vessel, it may be removed and a new attachment or part added correctly. The fabrication of the new attachment shall be in accordance with the Fabricator's design drawings.

*(b)* The area where the nonconforming attachment or part was removed shall be ground smooth and re-topcoated in accordance with para. M7-656.

*(c)* A new nozzle or attachment may be placed on the vessel using the correct lamination procedure shown in the Fabricator's design drawings and in accordance with Part 4 of this Standard.

*(d)* If a new nozzle does not interfere with the original nozzle, the original nozzle shall not be removed unless requested by the User. The repair procedure shall be approved by the registered Professional Engineer.



Copyright ASME International
Provided by IHS under license with ASME
No reproduction or networking permitted without license from IHS
Not for Resale

# MANDATORY APPENDIX M-8
# ACOUSTIC EMISSION EXAMINATION

## M8-100 SCOPE

This Appendix states the criteria that a vessel must satisfy to pass an acoustic emission examination. Equipment requirements are given in Article 11 of Section V of the ASME Boiler and Pressure Vessel Code, 2001 Edition.

NOTE: Additional background information concerning acoustic emission testing is contained in *Recommended Practice for Acoustic Emission Testing of Fiberglass Tanks/Vessels,* published by The Society of the Plastics Industry, Inc.

## M8-200 GENERAL

*(a)* Discontinuities located with acoustic emission examination shall be evaluated by other techniques, e.g., visual, ultrasonic, dye penetrant, etc., and shall be repaired and retested as appropriate.

*(b)* A vessel for which an acoustic emission examination is required must satisfy the criteria of Table M8-1. If the vessel does not, it is not in compliance with the requirements of this Standard.

*(c)* The acoustic emission examination is done in conjunction with the hydrostatic test. Therefore, it shall be witnessed by the Inspector, and he or she shall verify the acoustic emission examination report.

## M8-300 DEFINITIONS AND INSTRUMENT CALIBRATION

The criteria in Table M8-1 are defined in part by the reference amplitude threshold, a counts parameter $N_c$, and an amplitude parameter $A_m$. The quantities are defined in this Appendix. The amplitude parameter is defined in terms of the reference amplitude threshold and the threshold of acoustic emission detectability.

## M8-310 Threshold of Acoustic Emission Detectability

The threshold of acoustic emission detectability shall be determined using a 4 ft × 6 ft × $\frac{1}{2}$ in. 99% pure lead sheet. The sheet shall be suspended clear of the floor. The *threshold of detectability* is defined as the average measured amplitude of ten events generated by a 0.3 mm pencil ($2H$) lead break at a distance of 4 ft 3 in. from the sensor. A break shall be done at an angle of approximately 30 deg to the test surface with a 0.1 in. lead extension. The sensor shall be mounted 6 in. from the 4 ft side and mid-distance between the 6 ft sides.

## M8-320 Reference Amplitude Threshold

*(a)* For large amplitude events, the reference amplitude threshold shall be determined using a 10 ft × 2 in. × $\frac{3}{4}$ in. clean, mild steel bar. The bar shall be supported at each end by elastomeric, or similar, isolating pads.

*(b)* The *reference amplitude threshold* is defined as the average measured amplitude of ten events generated by a 0.3 mm pencil ($2H$) lead break at a distance of 7 ft from the sensor. A break shall be done at an angle of approximately 30 deg to the test surface with a 0.1 in. lead extension. The sensor shall be mounted 12 in. from the end of the bar on the 2 in. wide surface.

## M8-330 Count Criterion $N_c$ and $A_m$ Value

*(a)* The count criterion $N_c$ shall be determined either before or after the test using a 0.3 mm pencil ($2H$) lead broken on the surface of the vessel. A break shall be done at an angle of approximately 30 deg to the test surface with a 0.1 in. lead extension. Calibration points shall be chosen so as to be representative of different constructions and thicknesses, and should be performed above and below the liquid line (if applicable), and away from manways, nozzles, etc.



Copyright ASME International
Provided by IHS under license with ASME
No reproduction or networking permitted without license from IHS

Not for Resale

**TABLE M8-1 ACCEPTANCE CRITERIA**

| Criterion | First Filling | Subsequent Fillings | Significance of Criterion |
|---|---|---|---|
| Emissions during hold | None beyond 2 min | None beyond 2 min | Measure of continuing permanent damage |
| Felicity ratio | Not applicable | Greater than 0.95 | Measure of severity of previously induced damage |
| Total counts [Note (1)] | Less than $N_c$ | Less than $N_c/2$ | Measure of overall damage during a load cycle |
| Number of events greater than reference amplitude threshold | Less than 10 | Less than 10 | Measure of high energy microstructural failures. This criterion is often associated with fiber breakage. |

GENERAL NOTE: An acceptable vessel must meet all the criteria listed above. Background noise must be properly discounted when applying acceptance criteria.

NOTE:
(1) Varies with instrument manufacturer. See para. M8-330 for the definition of $N_c$.

*(b)* Two calibrations shall be carried out for each calibration point. One calibration shall be in the principal direction of the surface fibers (if applicable), and the second calibration shall be carried out along a line at 45 deg to the direction of the first calibration. Breaks shall be at a distance from the calibration point so as to provide an amplitude decibel value $A_m$ midway between the threshold of detectability and the reference amplitude threshold.

The count criterion $N_c$ shall be ten times the number of counts recorded from seven lead breaks at each of the two calibration points. The lead breaks shall be done with a 0.3 mm diameter ($2H$) pencil lead. The breaks shall be made with the lead at an angle of approximately 30 deg to the test surface with a 0.1 in. lead extension. When applying the count criterion, the value that is representative of the region where activity is observed should be used.

## M8-400 WRITTEN PROCEDURE REQUIREMENTS (00)

Acoustic emission examinations shall be performed following a written procedure. The procedure shall satisfy the requirements of para. T-1128 in Article 11 of Section V of the ASME Boiler and Pressure Vessel Code, 2001 Edition.

## M8-500 WRITTEN REPORT OF RESULTS (00)

The results of an acoustic emission examination shall be reported in a written document satisfying the requirements of para. T-1190 in Article 11 of Section V of the ASME Boiler and Pressure Vessel Code, 2001 Edition. The report shall be made available for review and acceptance by the Inspector.



Copyright ASME International
Provided by IHS under license with ASME
No reproduction or networking permitted without license from IHS
Not for Resale

# MANDATORY APPENDIX M-9
# GLOSSARY

*accelerator:* a material added to the resin to increase the rate of polymerization (curing).

*audit:* a systematic review to assess the implementation of prescribed procedures, specifications, or standards.

*axial:* in the direction of the axis (lengthwise centerline) of the equipment.

*Barcol hardness test:* test to determine the degree of cure by measuring resin hardness. The Barcol Impressor is the instrument used for measuring polyester and vinyl ester resin hardness (ASTM D 2583).

*binder:* chemical treatment applied to the random arrangement of glass fibers to give integrity to mats. Specific binders are utilized to promote chemical compatibility with the various laminating resins used.

*blister:* raised spot on the surface of a laminate caused by a subsurface air void.

*bonding:* joining of two or more parts by adhesive forces.

*bond strength:* force per unit area (psi) necessary to rupture a bond in interlaminar shear.

*burned areas:* areas of laminate showing evidence of decomposition (e.g., discoloration and/or cracking) due to excessive resin exotherm.

*burn out (burn off):* thermal decomposition of organic materials (resins and binders) from a laminate specimen in order to determine the weight percent of resin and glass reinforcement (synthetic reinforcements decompose together with the resin and binder).

*catalyst:* an organic peroxide material used to activate the polymerization reaction of a resin, causing it to harden (polymerization initiator).

*certify:* to attest, by signature and date, to conformance to procedures, specifications, or standards.

*chopped strand mat:* reinforcement made from randomly oriented glass strands that are held together in mat form using a binder. Each strand has a sizing.

*chopper gun:* a machine that is used to cut continuous fiberglass roving to predetermined lengths (usually $\frac{1}{2}$ in. to 2 in.) and propel the cut strands to the mold surface. In the spray-up process, a catalyzed resin spray is deposited simultaneously on the mold. When intersperse layers are provided in filament winding, the resin spray is often not used.

*contact molding:* process for molding RTP in which reinforcement and resin are placed in or on a mold. Cure is without the application of pressure on the materials, either at room temperature using a catalyst–promoter system or by heat in an oven. Includes both hand lay-up and spray-up.

*corrosion layer (barrier):* see paras. 2A-221 and 2A-222.

*coverage:* in hoop filament winding, the complete covering of the mandrel surface by a single layer of glass reinforcement and resin. In helical winding, two layers must be applied to achieve one coverage.

*crazing:* the formation of tiny hairline cracks in varying degrees throughout the resin matrix, particularly in resin-rich areas.

*critical service:* see para. 1-210(c).

*curing agents:* materials used to initiate the polymerization of a resin. The catalyst is the primary agent. Promoters and accelerators are secondary or assisting agents.

*cut edge:* end of a laminate resulting from cutting that is not protected by a corrosion barrier.

*delamination:* physical separation or loss of bond between laminate plies.

*dished end:* radiused end closure for a cylindrical vessel, as opposed to a flat or coned end.

*dry spot:* an area where the reinforcement fibers have not been sufficiently wetted with resin.

*edge sealing:* application of reinforcement and resin, or resin alone, to seal cut edges and provide a corrosion



Copyright ASME International
Provided by IHS under license with ASME
No reproduction or networking permitted without license from IHS
Not for Resale

resistant barrier. The final layer of resin shall be parafinated.

*entrapped air void:* cavity in a laminate caused by a trapped gas bubble.

*environment:* state of the surroundings in contact with the internal or external surface. Included are the temperature, pressure, chemical exposure, exposure to sunlight, relative humidity, liquids, and/or gases.

*equipment:* vessels used for the storage, accumulation, or processing of corrosive or otherwise hazardous substances at pressures ranging from full vacuum to 15 psig.

*equipment assembler:* person who puts together the component parts, e.g., joining sections, installation of nozzles, etc.

*exotherm:* evolution of heat by the resin during the polymerization reaction. The word exotherm is often used, however, to designate the maximum temperature reached during the polymerization process.

*exotherm ply:* that ply of chopped strand mat at which the lamination process is stopped to allow gelation and exotherm of the existing laminate.

*exterior layer:* outer surface layer of a laminate; see para. 2A-224.

*Fabricator:* producer of RTP equipment. The Fabricator combines resin and reinforcing fibers to produce the final product.

*fiber(glass):* a fine solid thread of glass.

*fiberglass roving:* a number of strands or filaments of glass fibers gathered together with little or no twist.

*fiberglass woven roving:* heavy fabric woven from glass fiber rovings.

*fiber wetting:* coating (wetting) of the fiberglass with resin by means of roll-out or immersion.

*filament:* see *fiber.*

*filament winding:* a process for forming RTP parts by winding either dry or resin-saturated continuous roving strands onto a rotating mandrel.

*fillers:* inert materials that are added to the resin to increase density, increase viscosity, improve abrasion resistance, enhance resin application properties, decrease resin shrinkage, reduce cost, etc.

*fill picks:* the rovings in a woven roving that run in the transverse direction of the fabric, i.e., across the roll width of the fabric.

*fit-up:* the match between joining parts, elements, or components.

*flame retardant resin:* halogenated resins that can be used with or without additives to provide a laminate having a reduced flame spread as measured in accordance with NFPA 255, Standard Method of Surface Burning Characteristics of Building Materials (UL723, ASTM E 84). The resins are not fire retardant in their liquid state.

*flame spread rating:* index number resulting from testing in accordance with NFPA 255, Standard Method of Surface Burning Characteristics of Building Materials (UL723, ASTM E 84).

*gap filling:* the filling of voids between joined parts, elements, or components with resin putty or resin.

*gel:* the initial jellylike solid phase that develops during the polymerization of resin.

*gel time:* time from the initial mixing of the resin with catalyst to when gelation begins.

*glass content:* weight percent of glass fiber reinforcement in the laminate.

*gun roving:* fiberglass roving designed for use in a chopper gun for spray-up application.

*hand lay-up:* a method of contact molding wherein the glass fiber reinforcement is applied to the mold, in the form of chopped strand mat or woven roving, by hand or from a reel. The resin matrix is applied by various methods including brush, roller, or spray gun. Consolidation of the composite laminate is by rolling.

*heat deflection temperature:* temperature at which a specified bar specimen deflects 0.010 in. when loaded as a simple beam to a constant 264 psi (see ASTM D 648, Test Method for Deflection Temperature of Plastics Under Flexural Load). Usually refers to a resin casting, not a laminate.

*helical winding:* filament winding where the reinforcement is placed at some angle (other than 0 or 90 deg) to the axis of rotation.

*hot patch:* several small fiberglass mat tabs, saturated with highly catalyzed resin, used to hold butted or joined parts or components in preparation for bonding.

*hydrostatic test:* pressure test of equipment using water as the test medium.



Copyright ASME International
Provided by IHS under license with ASME
No reproduction or networking permitted without license from IHS
Not for Resale

*independent testing laboratory:* the laboratory conducting the tests required by RTP-1 must be an entity separate organizationally, legally, and financially from the Fabricator and User or User's Agent. Additionally, no commercial, financial, or individual relationships shall exist between the parties that might compromise efforts to produce and report accurate test results. It is expected, however, that a commercial purchase order, contract, or agreement will be employed by the parties to arrange for testing services. The *independent testing laboratory* must be equipped and staffed with the necessary skilled personnel to conduct the tests in accordance with the requirements of the Standard.

*initiator:* see *catalyst.*

*inner surface:* see para. 2A-221.

*interior layer:* see para. 2A-222.

*intersperse:* chopped fiberglass used in a filament wound laminate, usually in thin layers between winding coverages.

*isophthalic polyester:* a polyester made from isophthalic acid.

*joint overlay:* an overlay laminate that joins the adjoining surfaces of two contacting parts or elements.

*laminate:* the total of the part constructed by combining one or more layers of material (reinforcement and/or resin). As used in this Standard, the corrosion laminate consists of the corrosion resistant barrier, the structural layer, and the outer surface.

*laminate composition:* the sequence of reinforcement materials on a type, class, and category basis that make up a laminate.

*laminate element:* a part of the structural layer of a filament wound laminate that is described by the wind angle, number of coverages with supplementary reinforcement (if used), and the required sequence.

*laminate structure (Type I, hand lay-up):* see Table 2A-1.

*laminate structure (Type II, hand lay-up):* see Table 2A-2.

*lamination analysis:* procedure by which, given the amount and properties of the resin and the properties and orientation of the reinforcement, it is possible to calculate the elastic properties of the individual layers and the total laminate.

*layout:* the arrangement and location of parts, elements, and/or components that reflect the design of a product.

*leno strands:* a pair of warp ends at each edge of a woven fiberglass fabric.

*liner:* see paras. 2A-221 and 2A-222.

*longitudinal:* see *axial.*

*lot, resin:* a resin lot is a quantity of resin that is formulated to its final composition in a single vessel, tested and assigned a unique number, and covered by a certificate of analysis.

*mandrel:* mold around which a laminate is formed to fabricate a cylindrical section.

*Manufacturers:* producers of materials of construction, e.g., resin, reinforcement fibers, catalysts, common additives, etc.

*manway:* large nozzle or opening in a vessel for the purpose of entry by personnel.

*materials:* ingredients (reinforcements, resins, catalysts, and common additives) that are used to fabricate the equipment.

*matrix:* resin phase of a fiberglass resin composite.

*mold:* the form over which or into which resin and reinforcements are placed to form the composite product shape.

*mold release agents:* see *parting agents.*

*monomer:* a basic compound that can react with itself to form a polymer.

*MSPI:* Manufacturer's Specific Product Identification.

*oblation:* the process by which cylindrical tank shells are compressed to create shapes varying from oval to figure eight. This action is taken to facilitate over-the-road shipment or installation in a confined space.

*overlay:* laminates used over base RTP structures to secure a joint, seal a seam, attach a nozzle, etc.

*paraffinated resin:* resin containing a small amount of dissolved paraffin (usually 0.1% to 0.5%). Polymerization of polyesters is inhibited by contact with the atmosphere. During cure, the paraffin migrates to the surface, sealing it against atmospheric exposure.

*parting agents:* also called *mold release agents.* Compounds that assist in releasing an RTP part from its mold.

*peroxide catalyst:* see *catalyst.*



Copyright ASME International
Provided by IHS under license with ASME
No reproduction or networking permitted without license from IHS
Not for Resale

*pit:* small crater in the surface of the laminate (see Table 6-1).

*polyester resin:* resin produced by the polycondensation of dihydroxy derivatives and dibasic organic acids or anhydrides, wherein at least one component contributes ethylenic unsaturation yielding resins that can be compounded with styryl monomers and reacted to give highly cross-linked thermoset resins.

*postcuring:* process of applying heat (180–200°F) to an RTP part, following the exotherm cycle. Proper postcuring will shorten the time to total cure.

*profile:* the roughness (smoothness) of the surface.

*promoter:* a material that activates the catalyst that cures the resin (also see *accelerator*).

*PVA:* abbreviation for polyvinyl alcohol, a parting agent.

*quality assurance:* the system by which the Fabricator provides evidence that the quality control system has been followed in the construction of the product.

*quality control:* the system a Fabricator uses to fabricate the equipment in compliance with this Standard.

*referee samples:* laminate specimens submitted to establish a level of quality for judging acceptance/rejection of production equipment.

*reinforcement:* glass fibers having the form of chopped roving, continuous roving, fabric, or chopped strand mat. These fibers are added to the resin matrix to strengthen and improve the properties of the resin.

*release film:* film used to facilitate removal of the part from the mold or mandrel. Oriented polyester film, 3–5 mil (Mylar®, Types A, S, or D; or Melinex 11®, Types S, O, or 442), has been found suitable for this purpose.

*resin:* the matrix of the laminate.

*resin putty:* resin filled with clay, fumed silica, milled glass fibers, or other inert materials to provide puttylike consistency.

*resin rich layer:* term often used to describe the corrosion barrier. The term does not imply excessive resin content.

*resin richness:* excessive amounts or uneven distribution of resin in the laminate. Such areas are subject to cracking. Resin richness is the result of improper wet-out procedures as well as inadequate or improper roll-out techniques or drainage.

*roll-out:* densification of the laminate by working reinforcement into the resin and the air out of the resin using a roller (a serrated metal or thermoplastic roller is often used for this purpose).

*rough profile:* the result of sanding, machining, or otherwise abrading a laminate surface to produce a roughened surface for bonding.

*roving:* a plurality of strands or filaments gathered together with little or no twist in a package known as a roving ball.

*RTP:* Reinforced Thermoset Plastic.

*secondary bond strength:* adhesive force that holds a separately cured laminate to the basic substrate laminate.

*sizing:* surface treatment or coating applied to filaments to improve the filament-to-resin bond.

*slugs:* unfiberized beads of glass.

*spray-up:* method of contact molding wherein resin and chopped strands of continuous filament glass fiber roving are deposited on the mold directly from a chopper gun.

*strain:* elongation per unit length.

*strand:* a plurality of filaments gathered together and bonded with sizing.

*stress:* load per unit area.

*structural layer:* the portion of the laminate construction providing the primary mechanical strength.

*surface preparation:* the act of roughening, priming, or otherwise treating laminate surfaces to achieve surface conditions that are conducive to adhesion of subsequently applied laminate bonds.

*surfacing veil (mat):* thin mat, of fiberglass, synthetic organic fiber, or carbon fiber, that is used to reinforce the corrosion resistant resin-rich layer on the inside or outside of equipment or to provide a smooth surface on the outside of equipment.

*Tex:* linear density of roving expressed in grams per 1,000 m.

*unidirectional rovings:* continuous parallel roving strands of glass fibers held together with periodic cross strands.

*User:* organization for which the equipment is being fabricated.



Copyright ASME International
Provided by IHS under license with ASME
No reproduction or networking permitted without license from IHS

Not for Resale

*UV absorber:* compounds that are added to resins to enhance their ultraviolet resistance.

*veil:* see *surfacing veil.*

*vinyl ester resin:* resin characterized by reactive unsaturation located predominately in terminal positions which can be compounded with styryl monomers and reacted to give highly cross-linked thermoset copolymers.

*visual acceptance criteria:* see para. 6-940.

*voids:* unfilled space caused by air or gas in the resin mix or by entrapment of such gases during lay-up of individual plies of glass. Excessive voids reduce the strength and chemical resistance of the laminate, particularly if the voids are at the resin–glass interface.

*warp ends:* the roving in a woven roving that runs in the longitudinal direction of the fabric, i.e., along the roll length of the fabric.

*wind angle:* angle from the axis of rotation at which the reinforcement strands are placed in the filament winding process.

*wind cycle:* in filament winding, one traversing of the carriage to the end of the mandrel and return to the original position. Depending on band width, part diameter, and wind angle, one or more wind cycles will be needed to achieve one coverage.

*yield:* linear density of roving, expressed in yards per pound.



Copyright ASME International
Provided by IHS under license with ASME
No reproduction or networking permitted without license from IHS
Not for Resale

(00)

# MANDATORY APPENDIX M-10
# REFERENCE DOCUMENTS

The following is a list of publications referenced in this Standard. The latest revisions of all references should be utilized.

International Building Code 2000

Publisher: International Code Council (ICC), 5203 Leesburg Pike, Suite 708, Falls Church, VA 22041-3401

National Building Code

Publisher: American Insurance Association (AIA), 1130 Connecticut Avenue, NW, Washington, DC 20036

Recommended Practice for Acoustic Emission Testing of Fiberglass Tanks/Vessels

Publisher: Society of the Plastics Industry (SPI), 1801 K Street, NW, Washington, DC 20006

Standard Building Code

Publisher: Southern Building Code Congress International (SBCCI), 900 Montclair Road, Birmingham, AL 35213

Uniform Building Code

Publisher: International Conference of Building Officials (ICBO), 5360 South Workman Mill Road, Whittier, CA 90601

API Standard 650, Welded Steel Tanks for Oil Storage

Publisher: American Petroleum Institute, 1220 L Street, NW, Washington, DC 20005-4070

ASCE 7, Minimum Design Loads for Buildings and Other Structures

Publisher: American Society of Civil Engineers (ASCE), 1801 Alexander Bell Drive, Reston, VA 20191-4400

ASME B16.5, Pipe Flanges and Flanged Fittings
ASME B18.22.1 Plain Washers
ASME B31.3, Process Piping

Publisher: American Society of Mechanical Engineers (ASME), 22 Law Drive, Box 2300, Fairfield, NJ 07007-2300

ASQ Z1.4, Sampling Procedures and Tables for Inspection by Attributes

Publisher: American Society for Quality (ASQ), P.O. Box 3005, Milwaukee, WI 53201-3005

ASTM C 177, Standard Test Method for Steady-State Heat Flux Measurements and Thermal Transmission Properties by Means of the Guarded-Hot-Plate Apparatus

ASTM C 581, Standard Practice for Determining Chemical Resistance of Thermosetting Resins Used in Glass-Fiber-Reinforced Structures Intended for Liquid Service

ASTM C 582, Standard Specification for Contact-Molded Reinforced Thermosetting Plastic (RTP) Laminates for Corrosion-Resistant Equipment

ASTM C 1147, Standard Practice for Determining the Short Term Tensile Weld Strength of Chemical-Resistant Thermoplastics

ASTM D 638, Standard Test Method for Tensile Properties of Plastics

ASTM D 648, Standard Test Method for Deflection Temperature of Plastics Under Flexural Load in the Edgewise Position

ASTM D 696, Standard Test Method for Coefficient of Linear Thermal Expansion of Plastics Between • 30¡C and 30¡C With a Vitreous Silica Dilatometer

ASTM D 790, Standard Test Methods for Flexural Properties of Unreinforced and Reinforced Plastics and Electrical Insulating Materials

ASTM D 792, Standard Test Methods for Density and Specific Gravity (Relative Density) of Plastics by Displacement

ASTM D 883, Standard Terminology Relating to Plastics

ASTM D 1599, Standard Test Method for Short-Time Hydraulic Failure Pressure of Plastic Pipe, Tubing, and Fittings

ASTM D 1781, Standard Test Method for Climbing Drum Peel for Adhesives

ASTM D 2393, Test Method for Viscosity of Epoxy Resins and Related Components

ASTM D 2471, Standard Test Method for Gel Time and Peak Exothermic Temperature of Reacting Thermosetting Resins



Copyright ASME International
Provided by IHS under license with ASME
No reproduction or networking permitted without license from IHS

Not for Resale

ASTM D 2583, Standard Test Method for Indentation Hardness of Rigid Plastics by Means of a Barcol Impressor

ASTM D 2584, Standard Test Method for Ignition Loss of Cured Reinforced Resins

ASTM D 3167, Standard Test Method for Floating Roller Peel Resistance of Adhesives

ASTM D 3846, Standard Test Method for In-Plane Shear Strength of Reinforced Plastics

ASTM D 4166, Standard Test Method for Measurement of Thickness of Nonmagnetic Materials by Means of a Digital Magnetic Intensity Instrument

ASTM D 4285, Standard Test Method for Indicating Oil or Water in Compressed Air

**(b)** ASTM D 4444, Standard Test Methods for Use and Calibration of Hand-Held Moisture Meters

ASTM D 5083, Standard Test Method for Tensile Properties of Reinforced Thermosetting Plastics Using Straight-Sided Specimens

ASTM D 5162, Standard Practice for Discontinuity (Holiday) Testing of Nonconductive Protective Coating on Metallic Substrates

ASTM E 84, Test Method for Surface Burning Characteristics of Building Materials

Publisher: American Society for Testing and Materials, 100 Barr Harbor Drive, West Conshohocken, PA 19428

AWS D1.1, Structural Welding Code — Steel

Publisher: American Welding Society (AWS), 550 NW Le Jeune Road, Miami, FL 33126

BS 4994, Specification for Design and Construction of Vessels and Tanks in Reinforced Plastics

Publisher: British Standards Institution (BSI) Inc., 12110 Sunset Hills Road, Suite 140, Reston, VA 20190

ISO 14130, Fibre-Reinforced Plastic Composites — Determination of Apparent Interlaminar Shear Strength by Short-Beam Method

Publisher: International Organization for Standardization (ISO), 1 rue de Varembé, Case Postale 56, CH-1211, Genève 20, Switzerland/Suisse

NFPA 255, Standard Method of Test of Surface Burning Characteristics of Building Materials

Publisher: National Fire Protection Association (NFPA), 1 Batterymarch Park, Quincy, MA 02269



Copyright ASME International
Provided by IHS under license with ASME
No reproduction or networking permitted without license from IHS

Not for Resale

# MANDATORY APPENDIX M-11
# SUBMITTAL OF TECHNICAL INQUIRIES TO THE REINFORCED THERMOSET PLASTIC CORROSION RESISTANT EQUIPMENT COMMITTEE

## M11-100 INTRODUCTION

*(a)* The ASME Reinforced Thermoset Plastic Corrosion Resistant Equipment Committee and its subcommittees and task groups meet regularly to consider revisions of the rules, new rules as dictated by technological development, Cases, and interpretations. This Appendix provides guidance to users for submitting technical inquiries to the Committee. Technical inquiries include requests for revisions or additions to the rules, requests for Cases, and requests for interpretations.

*(b)* Cases may be issued by the Committee when the need is urgent. Cases clarify the intent of existing requirements or provide alternative requirements. Cases are written as a Question and a Reply, and are usually intended to be incorporated into the Standard at a later date. Interpretations provide the meaning of or the intent of existing rules in the Standard and are also presented as a Question and a Reply. Both Cases and interpretations are published by the Committee.

*(c)* The rules, Cases, and interpretations established by the Committee are not to be considered as approving, recommending, certifying, or endorsing any proprietary or specific design, or as limiting in any way the freedom of Fabricators or constructors to choose any method of design or any form of construction that conforms to the rules.

*(d)* As an alternative to the requirements of this Appendix, members of the Committee and its subcommittees and task groups may introduce requests for revisions or additions, Cases, and interpretations at their respective committee meetings.

*(e)* Inquiries that do not comply with the provisions of this Appendix or that do not provide sufficient information for the Committee's full understanding may result in the request being returned to the inquirer with no action.

## M11-200 INQUIRY FORMAT

Submittals to the Committee shall include:

*(a) Purpose.* Specify one of the following:

*(1)* revision of present rule(s);

*(2)* new or additional rule(s);

*(3)* Case;

*(4)* interpretation.

*(b) Background.* Provide the information needed for the Committee's understanding of the inquiry, being sure to include reference to the applicable edition, addenda, paragraphs, figures, and tables. Preferably, provide a copy of the specific referenced portions of the Standard.

*(c) Presentations.* The inquirer may desire or be asked to attend a meeting of the Committee to make a formal presentation or to answer questions from the Committee members with regard to the inquiry. Attendance at a committee meeting shall be at the expense of the inquirer. The inquirer's attendance or lack of attendance at a meeting shall not be a basis for acceptance or rejection of the inquiry by the Committee.

## M11-300 REVISIONS OR ADDITIONS

Requests for revisions or additions shall provide the following.

*(a) Proposed Revision(s) or Addition(s).* For revisions, identify the rules of the Standard that require revision and submit a copy of the appropriate rules as they appear in the Standard, marked up with the proposed revision. For additions, provide the recommended wording referenced to the existing rules.

*(b) Statement of Need.* Provide a brief explanation of the need for the revision(s) or addition(s).

*(c) Background Information.* Provide background information to support the revision(s) or addition(s), including any data or changes in technology that form the basis for the request that will allow the Committee



Copyright ASME International
Provided by IHS under license with ASME
No reproduction or networking permitted without license from IHS

Not for Resale

to adequately evaluate the proposed revision(s) or addition(s). Sketches, tables, figures, and graphs should be submitted as appropriate. When applicable, identify any pertinent paragraph in the Standard that would be affected by the revision(s) or addition(s), and identify paragraphs in the Standard that reference the paragraphs that are to be revised or added.

## M11-400 CASES

Requests for Cases shall provide a *Statement of Need* and *Background Information* similar to that defined in paras. M11-300(b) and (c), respectively, for revisions or additions. The proposed Case should be written as a *Question* and a *Reply* in the same format as any existing Cases. Requests for Cases should also indicate the applicable edition(s) and addenda to which the proposed Case applies.

## M11-500 INTERPRETATIONS

Requests for interpretations shall provide the following.

*(a)* Provide a condensed and precise *Question,* omitting superfluous background information and, when possible, composed in such a way that a "yes" or a "no" *Reply,* possibly with brief provisos, is acceptable. The *Question* should be technically and editorially correct.

*(b)* Provide a proposed *Reply* that will clearly and concisely answer the *Question.* Preferably, the *Reply* should be "yes" or "no," possibly with brief provisos.

*(c) Background Information.* Provide any background information that will assist the Committee in understanding the proposed *Question* and *Reply.*

## M11-600 SUBMITTALS

Submittals to and responses from the Committee shall meet the following.

*(a) Submittal.* Inquiries from users shall preferably be submitted in typewritten form; however, legible handwritten inquiries will also be considered. They shall include the name, address, telephone number, and fax number, if available, of the inquirer and be mailed to the following address:

Secretary, RTP Main Committee
The American Society of Mechanical Engineers
Three Park Avenue
New York, NY 10016-5990

*(b) Response.* The Secretary of the Committee shall acknowledge receipt of each properly prepared inquiry and shall provide a written response to the inquirer upon completion of the requested action by the Committee.



Copyright ASME International
Provided by IHS under license with ASME
No reproduction or networking permitted without license from IHS
Not for Resale

# MANDATORY APPENDIX M-12
# DUAL LAMINATE VESSELS

## M12-100 INTRODUCTION

This Appendix includes the following Articles:

*(a)* Article A — General Requirements
*(b)* Article B — Materials
*(c)* Article C — Design
*(d)* Article D — Fabrication
*(e)* Article E — Inspection and Test
*(f)* Article F — Shipping and Handling
*(g)* Article G — Shop Qualification
*(h)* Article H — Qualification of Welders
*(i)* Article I — Glossary

## ARTICLE A
## GENERAL REQUIREMENTS

### M12A-100 SCOPE

*(a)* This Appendix describes fabrications that utilize a structural member that is fabricated in accordance with RTP-1 and is lined with thermoplastic as specified in the UBRS. The thermoplastic sheet liner serves as the primary corrosion barrier and either replaces or augments the corrosion resistant barrier. For calculation purposes, the thermoplastic liner is not to be considered in structural design of the fabrication.

*(b)* Equipment composed of a thermoplastic lining inside an RTP structural member is commonly called a *dual laminate* structure.

*(c)* This Appendix specifies rules for the fabrication of dual laminates where use of a thermoplastic material is selected for special applications such as containment of aggressive corrosives, of ultra-pure fluids such as deionized water, or of pharmaceutical chemicals, and/or for abrasive service.

*(d)* Special bonding materials and preparation procedures are required to ensure satisfactory bonding of the RTP structural laminate to the thermoplastic lining.

*(e)* This Appendix specifies rules for qualifying personnel to fusion weld the thermoplastic materials in order to provide continuous leak/void-free corrosion and abrasion resistant liners that conform to the requirements of this Standard.

*(f)* This Appendix lists the procedures for end user/customer inspection and quality assurance to meet the requirements for thermoplastic lined RTP equipment.

### M12A-200 APPLICATION LIMITATIONS

Thermoplastic lined vessels certified by the Fabricator as conforming to this Standard will be lined only with those thermoplastics described in Table M12B-1. Note that the ASTM specifications in Table M12B-1 provide the minimum material specifications.

## ARTICLE B
## MATERIALS

### M12B-100 SCOPE

This Article defines the thermoplastic lining materials that are used to fabricate thermoplastic lined RTP equipment, including the joining or welding materials and the bonding materials to join the lining to the RTP structure. Bond strength requirements are also included. The RTP structural layer will be in accordance with Part 2.

### M12B-200 THERMOPLASTIC LINING MATERIALS

Thermoplastics are used as corrosion resistant linings in dual laminate constructions. These materials are described in Tables M12B-1 and M12B-2. Table M12B-1 contains the ASTM specifications for materials used in this Standard. Table M12B-2 contains typical physical and mechanical properties for general comparisons. For purposes of design and selection, the thermoplastic manufacturer's property data must be used. Although most thermoplastic sheet materials will be supplied as individual flat sheets, some sheet materials may be supplied as rolls. In this standard, *sheet* material is intended to mean both flat sheets and sheets supplied



Copyright ASME International
Provided by IHS under license with ASME
No reproduction or networking permitted without license from IHS

Not for Resale

**TABLE M12B-1 ASTM SPECIFICATIONS FOR THERMOPLASTIC MATERIALS**

| Material | Applicable ASTM Material Specifications |
|---|---|
| PP | D 4101 Group 1, Class 1, Grade 1 or Group 2, Class 1, Grade 1 |
| PP copolymer | D 4101 |
| PVC | D 1784 Cell 12454, D 1593, D 1927, D 2241, and D 1785 |
| CPVC | D 1784 Cell 23447B |
| PVDF homopolymer | D 3222 |
| PVDF copolymer | None |
| ECTFE | D 3275 |
| ETFE | D 3159 |
| FEP | D 3368 |
| TFE | D 1457, D 4895, D 3293, and D 3294 |
| PFA | F 3307 |
| HDPE | D 1248 and D 3350 |
| MFA | None |

as rolls. Thermoplastics used to construct the liner will not contain regrind. Thickness will be as follows.

*(a)* Nominal lining thickness will be from 0.080 to 0.200 in. (2.0 to 5.0 mm). The appropriate thickness for an application is a balance between thicker linings which allow less permeation and thinner linings which result in less internal stress during forming.

*(1)* Lining thicknesses from 0.060 to 0.080 in. (1.5 to 2 mm) may be used if the Fabricator has qualified in that thickness prior to fabricating a vessel.

*(2)* Linings over 0.200 in. (5.0 mm) may be used, but special design calculations must be performed; see para. M12C-500(a).

*(b)* The thickness of a thermoplastic material with a fiber backing is defined as the thickness from the process side to the beginning of the impressed fibers, i.e., the fiber-free thickness.

*(c)* Thermoplastic shapes used as components welded to dual laminate vessels include pipes, ducts, rectangular tubes, angles, flange faces, reinforcement pads, abrasion pads, etc. The thickness of shapes will not be less than the liner thickness. As in sheet, fiber backed shape thickness is defined as the fiber-free thickness.

## M12B-300 FIBER BACKING MATERIALS

*(a)* Fibers embedded in the back of the thermoplastic provide a suitable bonding mechanism. Typically these fibers are partially embedded in the back of the thermoplastic, with the balance of the fibers protruding from the surface. Examples of fiber backing materials are glass fibers, polymer fibers, and carbon fibers.

*(b)* Formed parts such as knuckle radii, flanged and dished heads, and nozzle flares must not be restrained by the backing fabric.

## M12B-400 WELDING AND JOINING MATERIALS

*(a)* Weld rods, cap strips, extrusion welding materials, and sheet lining will have equal mechanical and chemical resistance properties.

*(b)* Welding materials are susceptible to moisture pickup and will be stored properly. Manufacturer's recommendations will be followed.

## M12B-500 FILLER MATERIALS, PIGMENTS, PROCESSING AIDS, AND CONDUCTIVE MATERIALS

*(a)* The specific thermoplastic manufacturer will be agreed on by the User. The Fabricator will provide manufacturer's data and certification documentation.

*(b)* Thermoplastic sheet incorporating ultraviolet light stabilizers will be provided if required by the UBRS or other User's specification.

*(c)* Plasticizer, if used even as a processing aid in the thermoplastic sheet, will be disclosed by the thermoplastic materials supplier in order to assess chemical compatibility and potential for contamination from the sheet lining.

*(d)* Conductive materials for high voltage spark testing targets will consist of powdered carbon or flake graphite mixed into the RTP resin, or of conductive carbon, conductive graphite, or modified conductive



Copyright ASME International
Provided by IHS under license with ASME
No reproduction or networking permitted without license from IHS
Not for Resale

Copyright ASME International
Provided by IHS under license with ASME
No reproduction or networking permitted without license from IHS



## TABLE M12B-2 TYPICAL THERMOPLASTIC PROPERTIES

| | | PP | | | | PVDF | | | | | | | |
|---|---|---|---|---|---|---|---|---|---|---|---|---|---|
| | HDPE | Homopolymer | Copolymer (Unfilled) | PVC | CPVC | Homopolymer | Copolymer | ECTFE | ETFE | FEP | TFE | MFA | PFA |
| Density, g/cm$^3$ | 0.95–0.97 | 0.91 | 0.88–0.91 | 1.38 | 1.5 | 1.75–1.79 | 1.76–1.79 | 1.68 | 1.70 | 2.12–2.17 | 2.2–2.3 | 2.12–2.17 | 2.12–2.17 |
| **Mechanical Properties** | | | | | | | | | | | | | |
| Tensile break strength (ASTM D 638), MPa | 22.1–31.1 | 31–41 | 27.6–38.0 | 41–52 | 47–62 | 31–48 | 24–41 | 46–54 | 45 | 19–21 | 14–19 | 28–36 | 28–31 |
| Tensile break strength (ASTM D 638), ksi | 3.2–4.5 | 4.5–6.0 | 4.0–5.5 | 6.0–7.5 | . . . | 4.5–7.0 | 3.5–6.0 | 6.6–7.8 | 6.5 | 2.7–3.1 | 2.0–2.7 | 3.5–4.42 | 4.0–4.5 |
| Tensile modulus (ASTM D 638), MPa | 1070–1090 | 1139–1553 | 897–1242 | 2415–4140 | 2353–3278 | 1380–5520 | . . . | 1656 | 828 | 345 | 400–552 | 440 | 483 |
| Tensile modulus (ASTM D 638), ksi | 155–158 | 165–225 | 130–180 | 350–600 | 341–475 | 200–800 | . . . | 240 | 120 | 50 | 58–80 | 64 | 70 |
| Elongation (ASTM D 638), % | 10–1200 | 100–600 | 200–500 | 40–80 | 4–100 | 12–600 | . . . | 200–300 | 100–400 | 250–330 | 200–400 | 300–600 | 300 |
| Yield strength (ASTM D 638), MPa | 26.2–33.1 | 31–37 | 20.7–29.7 | 41–45 | 41–55 | 20–57 | 20–38 | 31–34 | 49 | . . . | 12 | . . . | 14 |
| Yield strength (ASTM D 638), ksi | 3.8–4.8 | 4.5–5.4 | 3.0–4.3 | 5.9–6.5 | 6–8 | 2.9–8.3 | 2.9–5.5 | 4.5–4.9 | 7.1 | . . . | 1.7 | . . . | 2.1 |
| **Thermal Properties** | | | | | | | | | | | | | |
| HDT at 0.46 MPa (ASTM D 648), °C | 79–91 | 107–121 | 54–60 | 57 | 102–119 | 132–150 | 93–110 | 90 | 104 | 70 | 221 | 63 | 75 |
| HDT at 66 psi (ASTM D 648), °F | 175–196 | 225–250 | 130–140 | 158 | 215–247 | 270–300 | 200–230 | 194 | 220 | 158 | 250 | 145 | 166 |
| Linear coefficient of expansion (ASTM D 696) per °C × $10^{-5}$ | 10.6–19.8 | 14.6–18.0 | 12.2–17.1 | 5.0–10.0 | 11.2–14.0 | 12.6–25.6 | . . . | 14.4 | 10.6 | 8–11 | 12.6–22 | 12–16 | 25–38 |
| Linear coefficient of expansion (ASTM D 696) per °F × $10^{-5}$ | 5.9–11.0 | 8.1–10 | 6.8–9.5 | 2.7–5.6 | 6.2–7.8 | 7.0–14.2 | . . . | 8.0 | 5.9 | . . . | 2.0–12 | . . . | 14–21 |
| Thermal conductivity (ASTM C 177), W/m·K | 0.39–0.43 | 0.1 | 0.16 | 0.16–0.18 | 0.12 | 0.09–0.11 | 0.16 | 0.14 | 0.20 | 0.21 | 0.21 | 0.20 | 0.21 |
| Thermal conductivity (ASTM C 177), BTU/ft$^2$-hr-°F/in. | 76–83 | 0.7 | 1.1 | 1.1–1.23 | 0.81 | 0.59–0.76 | 1.11 | 0.97 | 1.40 | 1.48 | 1.48 | 1.41 | 1.48 |

GENERAL NOTE: Properties are at room temperature unless otherwise stated. Properties are typical values and are not to be used for design purposes. See para. M12B-200.





Not for Resale

polyester veil in the resin applied next to the thermoplastic lining.

## M12B-600 MATERIALS RECEIVING PROCEDURES

*(a)* All inspections and tests specified in paras. M12B-610, M12B-620, M12B-630, M12B-640, and M12B-650 are to be performed by Fabricator personnel or an independent testing laboratory.

*(b)* For inspections involving visual observations, a suitable inspection table and adequate overhead lighting for inspection of that material are required. The equipment used must not introduce contamination to the material during inspection and testing.

*(c)* For inspections requiring linear measuring tools, a standard linear tool (longer than the length to be measured) will be used. The tool will have a minimum accuracy of $\pm 1/16$ in. (±1.5 mm).

*(d)* In lieu of performing the above manufacturing inspections, measurements, and documentation, the Fabricator shall provide the User or User's Agent with a Certificate of Compliance from the material manufacturer. This Certificate will assure that materials were manufactured, inspected, and tested per the material supplier's specifications. However, this does not apply to inspections required in M12B-614.2(b).

## M12B-610 Thermoplastic Sheet

**M12B-611 Introduction.** This section specifies the minimum inspections, tests, and acceptance criteria that are to be performed on sheets or rolls of thermoplastic material with or without fiber backing.

*Fiber backing* is fibrous material impressed into the back of the thermoplastic in order to improve the bond strength between the thermoplastic and the RTP overlay. The fibers may be glass, polymeric, or carbon. The structure of the fibrous backing may be woven, knitted, or felt.

### M12B-612 Acceptance Inspection

*(a)* Acceptance inspection will include inspection of sheets or rolls for proper packaging and identification, inspection for imperfections and contamination, and measurements of thickness, length, and width. Acceptance requirements and limits are defined in para. M12B-610.

*(b)* The thermoplastic sheet manufacturer will specify acceptable weld materials.

*(c)* The form shown in Table M12B-3, or a similar form that contains the provisions to record the results of these required inspections, will be used by the Fabricator and will be retained in the inspection records. A separate form will be used for each sheet/roll manufacturer, sheet nomenclature, backing material, and unit thickness.

### M12B-613 Equipment and Measuring Tools Required

**M12B-613.1 Inspection Table and Lights.** See para. M12B-600(b).

**M12B-613.2 Thickness Measuring Tools**

*(a)* A standard micrometer with minimum accuracy of ±0.001 in. (±0.025 mm) is required. The throat should allow thickness measurements at least 1 in. (25.4 mm) in from the edge of the sheet.

*(b)* Alternative tools are an ultrasonic thickness tester or a microscope equipped with a calibrated filar eyepiece that measures across a properly prepared cross section of the sheet. These measuring tools must have an accuracy of ±0.001 in. (±0.025 mm) and must be calibrated to demonstrate this accuracy with the specific thermoplastic material being measured.

*(c)* In order to measure the thickness of fiber-backed sheet using a micrometer, remove the embedded fibers on the fiber-backed side of the sheet.

NOTE: A tool such as an appropriate hand scraper or a wood plane is suggested.

**M12B-613.3 Linear Measuring Tools.** See para. M12B-600(c). For rolls of thermoplastic sheet, the length measurement may be made if desired by the Fabricator.

**M12B-613.4 Bond Strength Measuring Tools**

*(a)* A tensile testing machine with over 5,000 lb capacity and measuring force accuracy of ±1 lb is required to measure bond strength.

*(b)* The Fabricator or independent testing laboratory must have the following apparatus and sample holders required to perform the following bond strength tests: climbing drum test according to ASTM D 1781, the peel test according to BS 4994 B-11, and the lap shear test in accordance with BS 4994 B-10 or with ASTM D 3846.

**M12B-613.5 High Voltage Spark Test.** An acceptable high voltage spark tester will be used; see para. M12D-500.



Copyright ASME International
Provided by IHS under license with ASME
No reproduction or networking permitted without license from IHS
Not for Resale

## TABLE M12B-3 THERMOPLASTIC SHEET OR ROLL RECEIVING LOG

Fabricator's name _____ Manufacturer _____

Address _____ Nomenclature _____

_____ Backing material and type of weave or felt _____

Shop order no. _____ Manufacturer's label thickness _____

| 1 Sample | 2 Production Date | 3 Lot, Batch, or Production Run | 4 Packaging Inspection By | 4 Packaging Inspection Date | 5 Thickness | 6 Dimensions Measured By | 6 Dimensions Measured Date | 7 Visual Inspection By | 7 Visual Inspection Date | 8 Bond Strength Measured By | 8 Bond Strength Measured Date | 9 Comments |
|---|---|---|---|---|---|---|---|---|---|---|---|---|
| | | | | | | | | | | | | |
| | | | | | | | | | | | | |
| | | | | | | | | | | | | |
| | | | | | | | | | | | | |
| | | | | | | | | | | | | |
| | | | | | | | | | | | | |
| | | | | | | | | | | | | |
| | | | | | | | | | | | | |

Comments on visual and packaging inspection (indicate which sheet or roll):

_____

_____

GENERAL NOTE: This form may be reproduced and used without written permission from ASME if used for purposes other than republication.



Copyright ASME International
Provided by IHS under license with ASME
No reproduction or networking permitted without license from IHS
Not for Resale

**TABLE M12B-4 THERMOPLASTIC SHEET VISUAL INSPECTION ACCEPTANCE CRITERIA**

| Imperfection Name | Definition of Imperfection | Maximum Size or Amount of Imperfection Allowed |
|---|---|---|
| Foreign inclusions | Particles in the sheet which are not of the plastic or backing composition | None |
| Surface pits | Small crater or hole in the surface of the sheet | None deeper than one-tenth of the sheet thickness nor larger than $1/32$ in.; no more than 4/ft$^2$ |
| Scratches | Willow marks, grooves, furrows, or channels caused by mechanical damage | None deeper than 0.005 in. (0.13 mm) nor more than 4 in. (100 mm) long |
| Dents, chips | Impressions from impact or small pieces broken out of surface | None deeper than one-tenth of the sheet thickness |
| Blisters (internal) | Pores within sheet | None |
| Wrinkles | Uneven surface from distortion of the sheet | None |
| Cracks | Linear fissures | None |
| Orange peel | Surface texture resembling the surface of oranges | None |
| Burned particles, lumps, delaminations | . . . | None |
| Color | . . . | Uniform to the eye |
| Damage to fiber backing | Snags, tears, knots | None |

## M12B-614 Procedures and Acceptance Limits

### M12B-614.1 Sheet Identification and Package Inspection

*(a)* Verify and enter on the inspection record that the sheet or roll as identified by the manufacturer has the same nomenclature as the sheet specified to produce the lined vessel, and is the same material and ASTM specification as listed in Table M12B-1. Examine the packaging of the sheet for damage that renders the sheet unusable. Indicate acceptable sheet by recording the date and name of the person performing the examination in Table M12B-3, column 4.

*(b)* For packaged sheets that are found to be acceptable for further inspection and tests, enter the sheet production date and lot number in Table M12B-3, columns 2 and 3.

### M12B-614.2 Visual Inspection of Thermoplastic Sheet or Roll

*(a)* The thermoplastic material will be visually inspected for imperfections and contamination prior to use by the Fabricator. The defects and criteria listed in Table M12B-4 will be used.

*(b)* Fiber backing will be visually inspected for adequate embedding, for mechanical damage, for dryness, and for contamination. The damage or removal of a protective film will be noted. Sheet backing that contains moisture will be dried and used only if the backing is polyester or acrylic fiber; all other fibers that show evidence of having moisture will be cause for rejection of the thermoplastic sheet. Any sheet backing that has been exposed to any other contaminants will be rejected.

*(c)* After visual inspection, record the date and the inspector's name in Table M12B-3, column 7. If any defect is found that is cause for rejection, record the reason under the comments section in Table M12B-3.

*(d)* Areas of sheets that have defects greater than allowed in Table M12B-4 will not be repaired and will not be used.

### M12B-614.3 Sheet Thickness

*(a)* Sheet thickness will be measured at least every 6 in. across the width of the sheet edge. Measurements may be made using a caliper micrometer or ultrasonic thickness tester, or using a microscope and measuring the thickness across a cross section using a filar eyepiece. Any measurement not within the requirements of subparagraph (c) below is cause for rejection. The minimum/maximum measurement will be entered in Table M12B-3, column 5. After other dimensions are entered, the inspector will enter the date and his or her name in column 6 if all measurements are within the requirements of this Standard.

*(b)* Sufficient measurements will be made to insure



Copyright ASME International
Provided by IHS under license with ASME
No reproduction or networking permitted without license from IHS
Not for Resale

that all of the material used is within thickness requirements. Measurements across two widths at each end and at least every 50 ft of length are required.

*(c)* The sheet's thickness will be ±10% of nominal thickness.

### M12B-614.4 Bond Strength Requirements

*(a)* At least one of the three bond strength tests described in para. M12B-613.4(b) must be conducted on each production run of thermoplastic material intended for lining in dual laminates. The bonded sample will be made using the RTP resin specified and the laminating technique to be used in the vessel to be fabricated. The thickness of the RTP laminate structure will be that thickness compatible with the selected bond strength test method.

*(b)* When a bonding resin is used, the bonding resin used to generate bond test samples will be the same bonding resin used to fabricate the vessel.

*(c)* Bond strength tests must be performed with the conductive target in place over the entire test sample.

*(d)* The minimum bond strength results (excluding nozzle necks) are:

*(1)* for the climbing drum test, ASTM D 1781, the bond strength must be at least 50 in.-lb/in.;

*(2)* for the peel test, BS 4994 B-11, the bond strength must be at least 40 lb/in. (5 N/mm);

*(3)* for the lap shear test, ASTM D 3846 or BS 4994 B-10, the bond shear strength must be at least 1,015 psi (7 $N/mm^2$).

*(e)* Separate records will be kept for each bond strength test accomplished. Results will be maintained in the Quality Control Log and the test operator will enter his or her initials and the date the test was made in Table M12B-3, column 8. Test results lower than the values in subparagraph (d) above will be entered in Table M12B-3 in the comments section and will be cause for rejection of that material.

**M12B-614.5 Disposition of Nonconforming Material.** Sheets with defective areas may be cut, routed, or sheared to remove and discard the defective areas. Care must be used in handling cracked or crazed sheets, as mechanical treatments may cause the crack to propagate. After eliminating areas with defects, the remaining material may be used.

## M12B-620 Welding Consumables

**M12B-621 Introduction.** This section describes the minimum inspections, tests, and acceptance criteria to be performed on thermoplastic welding consumables used for filler materials in welding thermoplastic material to fabricate equipment to this Standard. Consumables include weld rod, continuous coils of weld "wire," cap strips, and extrusion weld materials.

### M12B-622 Acceptance Inspection

*(a)* Acceptance inspection will include inspection of welding materials for proper packaging and identification, inspection for imperfections and contamination, and measurement of dimensions. Acceptance requirements and limits are defined in paras. M12B-624.1 through M12B-624.3.

*(b)* The manufacturer of the sheet to be used will certify that the weld materials are acceptable.

*(c)* The form shown in Table M12B-5, or a similar form that contains the provisions to record the results of these required inspections, will be used by the Fabricator and will be retained in the inspection records. A separate form will be used for each kind of weld material and for each manufacturer.

### M12B-623 Equipment and Measuring Tools Required

**M12B-623.1 Inspection Table and Lights.** See para. M12B-600(b).

**M12B-623.2 Dimensional Measuring Tools.** A standard micrometer or caliper capable of measuring with an accuracy of at least ±0.001 in. (±0.025 mm) is required.

### M12B-624 Procedures and Acceptance Limits

#### M12B-624.1 Welding Material Identification and Package Inspection

*(a)* The welding materials will not be repackaged during the distribution of the materials after the manufacturer has shipped the materials. Verify and enter on the inspection record that the welding materials as identified by the manufacturer have the same nomenclature as the materials specified to produce the equipment. For cap strips, indicate in Table M12B-5, column 1 whether the strip has a fiber backing and the kind of backing. Examine the packaging of the welding materials for damage that renders the materials unusable. Indicate acceptable welding materials by recording the date and name of the person performing the inspection in Table M12B-5, column 4.

*(b)* For welding material lots found acceptable, enter the material's production date and lot number in Table M12B-5, columns 2 and 3.



Copyright ASME International
Provided by IHS under license with ASME
No reproduction or networking permitted without license from IHS

Not for Resale

## TABLE M12B-5 WELDING MATERIAL RECEIVING LOG

Fabricator's name _____ Manufacturer _____

Address _____ Nomenclature _____

_____ Material Shape _____

_____ Nominal dimensions _____

| 1 Welding Material No. | 2 Production Date | 3 Lot, Batch, or Production Run | 4 Packaging Inspection By | 4 Packaging Inspection Date | 5 Visual Inspection By | 5 Visual Inspection Date | 6 Dimensions | 7 Comments |
|---|---|---|---|---|---|---|---|---|
| 1 | | | | | | | | |
| 2 | | | | | | | | |
| 3 | | | | | | | | |
| 4 | | | | | | | | |
| 5 | | | | | | | | |
| 6 | | | | | | | | |
| 7 | | | | | | | | |
| 8 | | | | | | | | |
| 9 | | | | | | | | |
| 10 | | | | | | | | |
| 11 | | | | | | | | |
| 12 | | | | | | | | |
| 13 | | | | | | | | |
| 14 | | | | | | | | |

GENERAL NOTE: This form may be reproduced and used without written permission from ASME if used for purposes other than republication.



Copyright ASME International
Provided by IHS under license with ASME
No reproduction or networking permitted without license from IHS Not for Resale

### M12B-624.2 Visual Inspection of Welding Consumables

*(a)* The welding materials will be visually inspected for imperfections and contamination prior to use by the Fabricator.

*(b)* The limits of imperfections found are as follows.

*(1)* No foreign materials, including water, other fluids, or particles, are allowed.

*(2)* Color of all welding materials in a given lot will be uniform.

*(3)* There will be no bends or other irregularities in shape, including variations in cross section.

*(4)* There will be no porosity or bubbles.

*(5)* Surface will be smooth with uniform appearance.

*(c)* After visual inspection, record the date and the inspector's name in Table M12B-5, column 5. If any defect is found that is cause for rejection, record the reason in Table M12B-5, column 7.

### M12B-624.3 Dimensions Inspection

*(a)* The diameter of each rod or coiled welding "wire," and the widths and thicknesses of other shapes, will be measured. The results of these measurements will be entered in Table M12B-5.

*(b)* The inspector performing dimension measurements will enter his or her initials and the inspection date in Table M12B-5.

## M12B-630 Bonding Resin

**M12B-631 Introduction.** The bonding resin for bonding PVC or CPVC to the RTP structure is applied to the thermoplastic, which promotes a chemical bond to both the thermoplastic and the RTP overlay.

### M12B-632 Acceptance Inspection

*(a)* Acceptance inspection will include inspection of the containers of bonding resin for proper packaging and identification, for evidence of damage to the resin or its container, for insuring that the label on the container is proper and that the shelf life has not exceeded the manufacturer's recommended shelf life, and testing for bonding strength. Acceptance requirements and limits are defined in paras. M12B-634.1 and M12B-634.2.

*(b)* The form shown in Table M12B-6, or a similar form that contains the provisions to record the results of these required inspections, will be used by the Fabricator and will be retained in the inspection records. A separate form will be used for each lot of bonding resin received.

*(c)* The bonding resin will be tested for bond strength in accordance with para. M12B-634.2.

*(d)* Any bonding resin that is found to be past its shelf life expiration date will not be used.

**M12B-633 Equipment and Measuring Tools Required.** See para. M12B-600(b) for inspection table and lights.

### M12B-634 Procedures and Acceptance Limits

#### M12B-634.1 Resin Identification and Packaging Inspection

*(a)* The resin will be packaged as shipped from the resin manufacturer's factory. The resin will not be repackaged in the distribution of the materials after the resin manufacturer has shipped the resin. Verify and enter in the inspection record that the resin as identified by the resin manufacturer has the same nomenclature as the resin specified to bond the thermoplastic as specified in the UBRS and the thermoplastic manufacturer's instructions. Examine the packaging for damage that renders the resin unusable. Indicate acceptable lots of resin by recording the date of manufacture and the name of the person performing the examination in Table M12B-6, column 4. Determine the shelf life expiration date and record it in column 5 of Table M12B-6.

*(b)* For lots of resin that are found to be acceptable for further inspection and tests, enter the resin production date and lot number in Table M12B-6, columns 2 and 3.

**M12B-634.2 Bond Strength Measurement.** The bonding resin will be tested for bonding strength in accordance with the provisions of paras. M12B-613.4 and M12B-614.4. At least one bond strength test will be performed for each lot of bonding resin received. The results will be entered in Table M12B-6, column 6. Lots of resin that fail to meet the acceptance requirements will not be used and a comment noting the failure to meet the acceptance limits will be entered in Table M12B-6, column 7.

## M12B-640 Conductive Spark Test Targets

**M12B-641 Introduction.** Conductive material is used to provide an electrically conductive layer behind the thermoplastic lining and behind the weld joints in order to allow valid high voltage spark tests to evaluate the integrity of the weld joints and the thermoplastic sheet. Conductive materials for high voltage spark testing targets will consist of powdered carbon or flake graphite mixed into the RTP resin, or of conductive carbon, conductive graphite, or modified conductive



Copyright ASME International
Provided by IHS under license with ASME
No reproduction or networking permitted without license from IHS
Not for Resale

## TABLE M12B-6 BONDING RESIN RECEIVING LOG

Fabricator's name _____ Manufacturer _____

Address _____ Nomenclature _____

_____ Shelf life _____

_____

| 1 Number | 2 Production Date | 3 Lot, Batch, or Production Run | 4 Packaging Inspection By | 4 Packaging Inspection Date | 5 Shelf Life Expiration Date | 6 Bond Strength Test Results [Note (1)] By | 6 Bond Strength Test Results [Note (1)] Date | 7 Comments |
|---|---|---|---|---|---|---|---|---|
| 1 | | | | | | | | |
| 2 | | | | | | | | |
| 3 | | | | | | | | |
| 4 | | | | | | | | |
| 5 | | | | | | | | |
| 6 | | | | | | | | |
| 7 | | | | | | | | |
| 8 | | | | | | | | |
| 9 | | | | | | | | |
| 10 | | | | | | | | |
| 11 | | | | | | | | |
| 12 | | | | | | | | |
| 13 | | | | | | | | |

GENERAL NOTE: This form may be reproduced and used without written permission from ASME if used for purposes other than republication.

NOTE:
(1) Indicate test used: C = climbing drum, P = peel test, L = lap shear test.



Copyright ASME International
Provided by IHS under license with ASME
No reproduction or networking permitted without license from IHS Not for Resale

polyester veil in the resin, applied next to the thermoplastic lining. If powder is used, it is mixed in the resin in sufficient quantity so that the cured resin is conductive enough for spark testing. This resin mixture is then applied directly to the thermoplastic and entrapped air is removed. The fiber forms of carbon or polyester are laid into resin already applied to the back of the weld or sheet. The conductive fiber mixture is then rolled, or otherwise treated, to remove entrapped air bubbles.

**CAUTION: Some carbon and graphite materials can inhibit resin cure.**

### M12B-642 Acceptance Inspection

*(a)* Acceptance inspection will include inspection of the packaging and identification, and measurement of electrical conductivity of samples of resin mixed with a specific amount of carbon or graphite, or samples of resin and conductive polyester mixtures, used to generate the conductive target.

*(b)* The form shown in Table M12B-7, or a similar form that contains the provisions to record the results of these required inspections, will be used by the Fabricator and will be retained in the inspection records. A separate form will be used for each carbon, graphite, or polyester manufacturer and for each carbon, graphite, or polyester nomenclature.

### M12B-643 Equipment and Measuring Tools Required

**M12B-643.1 Inspection Table and Lights.** See para. M12B-600(b).

**M12B-643.2 Small Scale Resin Mixing Area.** A table or other adequate space will be allocated to the preparation of a sample of the graphite–resin mixture. Preparation equipment will consist of at least weighing scales, mix pail or bucket, and casting mold or equivalent for shaping the sample to a small slab approximately $^{1}/_{16}$ in. (1.5 mm) thick.

**M12B-643.3 Electric Conductivity Measuring Device.** A high voltage spark tester with adjustable voltage is required. See para. M12D-500 for details of this test method.

### M12B-644 Procedures and Acceptance Limits

#### M12B-644.1 Conductive Material Identification and Package Inspection

*(a)* The conductive materials will be packaged as shipped from the manufacturer's factory. They will not be repackaged in the distribution of the material after the manufacturer has shipped the material. Verify that the material as identified by the manufacturer has the same nomenclature as the material required by the UBRS.

*(b)* The conductive material packaging will be examined for damage that renders the material unusable. Indicate acceptable lots by recording the date and name of the person performing the inspection in Table M12B-7, column 4.

*(c)* For packaged lots that are found to be acceptable for further inspection and test, enter the material production date and lot number in Table M12B-7, columns 2 and 3.

#### M12B-644.2 Conductivity of Resin–Conductive Material Samples

*(a)* A sample of the conductive material is mixed with the resin to be used in the RTP structure. The sample will have the same content of conductive material as will be used in the fabrication of targets on the fabricated vessel. The sample will be cast or formed by appropriate means to about $^{1}/_{16}$ in. (1.5 mm) thick and at least 8 in. (200 mm) long. All air bubbles will be removed; then the sample will be cured.

*(b)* The conductivity of the sample will be tested by using a high voltage spark tester at the same voltage as will be used on the welded thermoplastic in the finished vessel. The conductive sample will be tested directly by exposing the high voltage probe over the sample. Alternatively, the sample may be placed under the joint between two pieces of the thermoplastic sheet, also at least 8 in. (200 mm) long, which are butted up to one another with a very tight fit and clamped so the three pieces are immobile. The high voltage test will then be made on the top of the thermoplastic using the pointed probe and using the voltage required for the thickness of thermoplastic used.

*(c)* The test must produce a bright spark distance nearly the same distance as a test to an excellent ground. In the case that the high voltage test does not produce the normal audible sound or nearly the same spark distance as to a good ground, the sample will be deemed as not having adequate conductivity and that lot of conductive material will be rejected.

### M12B-650 Thermoplastic Shapes for Vessel Components

**M12B-651 Introduction and Banding.** This section specifies the minimum inspections and tests that are to be performed on thermoplastic shapes which become part of the fabricated vessel that is to be fabricated to this Standard. Thermoplastic shapes include



Copyright ASME International
Provided by IHS under license with ASME
No reproduction or networking permitted without license from IHS
Not for Resale

pipe, duct, plate, angle, rod, or rectangular tubes and other thermoplastic materials that are intended to become part of the vessel. These shapes could become nozzle necks, baffles, baffle braces, dip tubes, supports for internal components, etc.

Adhesion to nozzles, piping, and fittings may be achieved by alternate surface treatments.

### M12B-652 Acceptance Inspections

*(a)* Acceptance inspections will include inspection of the shapes for proper packaging and identification, inspection for imperfections and contamination, and dimensional measurements. Acceptance requirements and limits are defined in paras. M12B-654.1 through M12B-654.3.

*(b)* The form shown in Table M12B-8 or a similar form that contains the provisions to record the results of inspections, will be used by the Fabricator and will be retained in the inspection records. A separate form will be used for each shape manufacturer and for each different size and shape.

*(c)* These inspections may be waived if the materials come from an ISO-certified manufacturing facility and are accompanied by a manufacturer's material certificate.

### M12B-653 Equipment and Measuring Tools

**M12B-653.1 Inspection Table and Lights.** See para. M12B-600(b).

**M12B-653.2 Linear Measuring Tools.** See para. M12B-600(c). A standard caliper or micrometer accurate to ±0.001 in. (±0.025 mm) is required to measure the thickness of thermoplastic shapes.

### M12B-654 Procedures and Acceptance Limits

#### M12B-654.1 Shape Identification and Package Inspection

*(a)* Verify and enter on the inspection record that the shapes as identified by the thermoplastic manufacturer have the same nomenclature as the shapes specified to produce the vessel. Examine the packaging of the shapes for damage that renders the shapes unusable. Indicate acceptable shapes by recording the date and name of the person performing the examination in Table M12B-8, column 4.

*(b)* For shapes that are found to be acceptable for further inspection and tests, enter the date of receipt and lot number in Table M12B-8, columns 2 and 3.

#### M12B-654.2 Visual Inspection of Thermoplastic Shapes

*(a)* Shapes will be visually inspected on receipt or when the shapes are used. This inspection will be for imperfections and contamination. The date and the name of the person performing visual inspection will be recorded in Table M12B-8, column 6. If any shape is rejected, record the reason under the comments section in Table M12B-8.

*(b)* Thermoplastic shapes having any of the following defects will not be used for components of vessels made to this Standard:

*(1)* visible contaminants, either inside the shape or embedded in the surface, $^1/_{16}$ in. or larger in size;

*(2)* surface dents other than surface depressions with depth more than 10% of thickness;

*(3)* scratches and sharp indentations.

*(c)* Surface defects may be repaired to conform to the above requirements, as long as thickness limitations are not exceeded.

#### M12B-654.3 Measurement of Thermoplastic Shape Dimensions

*(a)* Thickness of each shape will be measured in at least two places. Thickness will be within ±10% of the nominal dimensions.

*(b)* Shape dimensions other than thickness will be measured and all will be less than $\pm^1/_{16}$ in. (±1.5 mm) of the nominal dimensions.

*(c)* Record all measurements and indicate in Table M12B-8, column 5 the date and the name of the person performing the measurements.

**M12B-654.4 Weldability.** The Fabricator will verify weldability of thermoplastic shapes prior to use by welding the shape to the sheet and evaluate visually for mechanical integrity. The Fabricator will indicate in Table M12B-8 that a weldability test has been performed.

## ARTICLE C
## DESIGN

### M12C-100 SCOPE

Article C sets forth special design rules and guidelines for the thermoplastic lining in order to produce a high-quality lining with sufficient strength to avoid failure of the lining or failure of the bond between the lining and the RTP structure.



Copyright ASME International
Provided by IHS under license with ASME
No reproduction or networking permitted without license from IHS
Not for Resale

## TABLE M12B-7 CONDUCTIVE MATERIAL RECEIVING LOG

Fabricator's name _____ Carbon/graphite manufacturer _____

Address _____ Powder nomenclature _____

_____ Fabric type nomenclature _____

_____

| 1 Conductive Material No. | 2 Production Date | 3 Lot Number | 4 Packaging Inspection By | 4 Packaging Inspection Date | 5 Conductivity Test By | 5 Conductivity Test Date | 6 Comments |
|---|---|---|---|---|---|---|---|
| 1 | | | | | | | |
| 2 | | | | | | | |
| 3 | | | | | | | |
| 4 | | | | | | | |
| 5 | | | | | | | |
| 6 | | | | | | | |
| 7 | | | | | | | |
| 8 | | | | | | | |
| 9 | | | | | | | |
| 10 | | | | | | | |
| 11 | | | | | | | |
| 12 | | | | | | | |
| 13 | | | | | | | |
| 14 | | | | | | | |

Comments on visual and packaging inspection and conductivity test (indicate which lot):

_____

_____

GENERAL NOTE: This form may be reproduced and used without written permission from ASME if used for purposes other than republication.



Copyright ASME International
Provided by IHS under license with ASME
No reproduction or networking permitted without license from IHS
Not for Resale

## TABLE M12B-8 THERMOPLASTIC SHAPE RECEIVING LOG

Fabricator's name _____ Manufacturer _____

Address _____ Nomenclature _____

_____ Description _____

_____

| 1 Shape | 2 Production Date | 3 Lot, Batch, or Production Run | 4 Packaging Inspection | | 5 Dimensions Measured | | 6 Visual Inspection | | 7 Weldability | | 8 Comments |
|---|---|---|---|---|---|---|---|---|---|---|---|
| | | | By | Date | By | Date | By | Date | By | Date | |
| | | | | | | | | | | | |
| | | | | | | | | | | | |
| | | | | | | | | | | | |
| | | | | | | | | | | | |
| | | | | | | | | | | | |
| | | | | | | | | | | | |
| | | | | | | | | | | | |
| | | | | | | | | | | | |

Comments on visual and packaging inspection (indicate which shape):

_____

_____

GENERAL NOTE: This form may be reproduced and used without written permission from ASME if used for purposes other than republication.



Copyright ASME International
Provided by IHS under license with ASME
No reproduction or networking permitted without license from IHS Not for Resale

This Article contains special requirements for sheet layout, for forming the thermoplastic sheet, for internal attachments, for nozzle attachments, and for management of thermal stresses, and guidelines for material selection.

## M12C-200 MATERIAL SELECTION

The following factors will be considered for proper material selection for a lining application:

*(a)* chemical resistance at the temperature of operation and at maximum upset temperatures;

*(b)* the potential for environmental stress cracking, considering:

*(1)* the fluids contacted including cleaning and other incidental fluids;

*(2)* operating conditions including the residual and operational stresses and the exposure temperature;

*(c)* thickness. The lining will be thick enough so that permeation will be low to minimize chemical exposure to the RTP structure. However, the lining will not be so thick that anticipated forming processes during fabrication will cause damaging stresses and possible failure;

*(d)* temperature–creep limitations for the bonding resin. A guideline limit is that the HDT (66 psi) of the bonding resin will be at least 20°C (36°F) greater than the maximum design temperature of the vessel;

*(e)* the need for stress relief in the case of high residual stresses from forming or welding, which could cause cracking or other failure mode in service;

*(f)* residual stresses in the received sheet and the need for stress relief prior to fabrication.

## M12C-300 SHEET MAP AND WELD PLACEMENT

*(a)* Prior to fabrication, a sheet map will be generated showing the lining in detail. All sheet sizes will be identified. The heads of vessels will be laid out, showing the extent of cold forming or thermoforming and the weld locations.

*(b)* The sheet map will show the location of all welds and the type of each weld, e.g., hot gas weld, extrusion weld, cap strip weld.

*(c)* The sheet placement will be such that there are no four-corner weld intersections. Sheets will be staggered to avoid any such intersections.

*(d)* Welds in knuckle radii that are parallel to the centerline of the knuckle radius will not be allowed except for nozzle penetrations.

*(e)* If possible, nozzles will not be placed through a weld seam.

*(f)* Nozzle design and weld detail will be shown on separate drawings. These drawings will show nozzle location, internal attachment details, flange details, and weld details.

*(g)* For ledges, see the limit on circumferential welds in para. M12C-400(e).

## M12C-400 WALL ATTACHMENTS

*(a)* During design stages, every effort will be made to support all internal appurtenances by the RTP structure. Internal attachments to the inside of a vessel will not be attached solely to the thermoplastic lining.

*(b)* As a last resort, if the thermoplastic lining must provide support for an internal attachment, the following types of conditions must be analyzed and designed to meet the following limitations:

*(1)* the operating stresses imposed on the lining will not exceed 10% of the ultimate strength of the liner material at design temperature;

*(2)* the operating stresses on the lining–RTP bond will not exceed 10% of the ultimate shear stress for the lining–RTP bond;

*(3)* long-term weld factors will be used in all calculations; strength and degradation of welds over time at operating temperatures will be considered.

*(c)* Baffles and dip pipe supports are typical attachments requiring welding to the thermoplastic lining. These and other appurtenances attached only to the lining will be designed separately and the results will be set forth on separate drawings showing stress calculations; attachment details, including supports and braces; and weld details.

*(d)* In designing attachments, the strength of the liner material at operating temperature, the reduced strength of welds due to the long-term weld factor, and the presence of high alternating stresses will be considered.

*(e)* Ledges will be designed with the support strength from the RTP structure under the lining. Circumferential welds will be located so that they are not part of the bends required in forming ledges. See Fig. M12C-1.

*(f)* Reinforcement pads will be used; see para. M12D-700(c).

## M12C-500 DESIGN STRESS LIMITATIONS

*(a)* The thermoplastic liner will be included in the analysis, but will not be considered to add to the



Copyright ASME International
Provided by IHS under license with ASME
No reproduction or networking permitted without license from IHS
Not for Resale

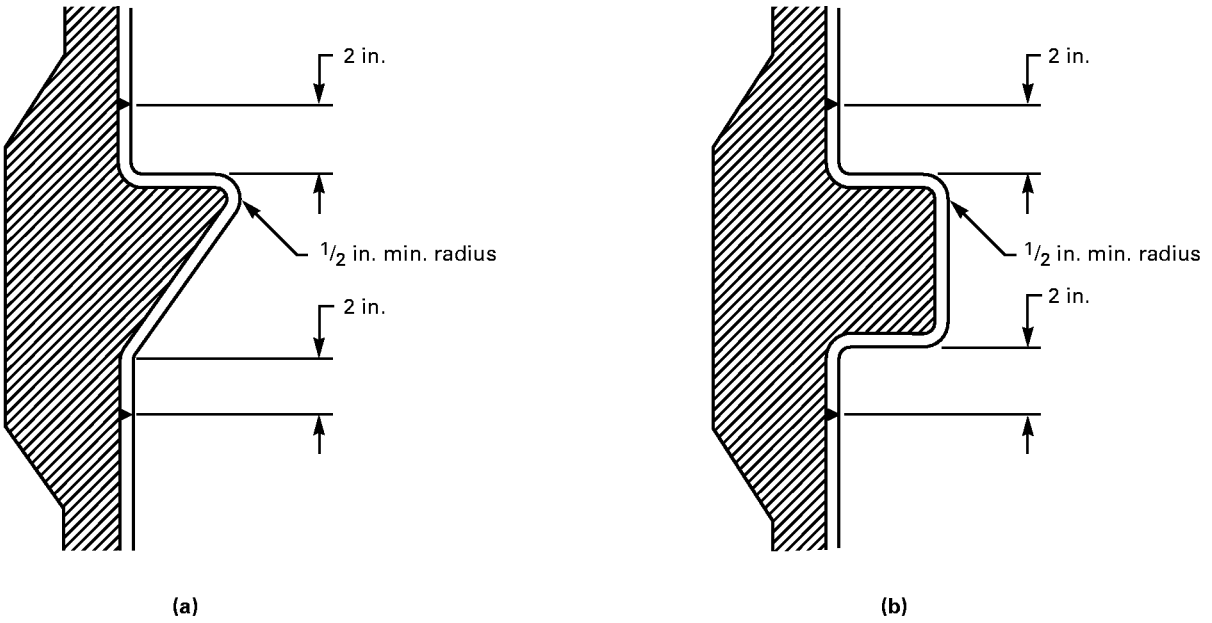


**FIG. M12C-1 SUPPORT LEDGES SHOWING RECOMMENDED WELD LOCATIONS AWAY FROM THERMOFORMED BENDS**

overall strength of the structure of the vessel. For liner thicknesses over 0.200 in. or 5 mm, design calculations will be accomplished for each material and each temperature combination anticipated.

*(b)* Residual stresses from forming or welding can be minimized by post-stress relieving or annealing.

*(c)* Thermal stresses in the lining from process fluids must be considered. These stresses will be analyzed, because differential coefficients of expansion can cause high bond stresses and debonding. Bond stresses from thermal stresses must not exceed 100 psi in shear. If the bond shear strength at operating temperature is known, thermal stresses must not exceed 10% of this bond shear strength except that thermal stresses will in no case exceed 100 psi. In addition, thermal gradients can promote diffusion beyond expected levels. One technique to reduce thermal gradients across the lining is to use external thermal insulation. Analysis of the amount of reduction in gradients is necessary to evaluate the benefits of the use of insulation. Another technique to reduce these high delamination stresses is to use a flexible resin between the lining and the RTP structure; however, the mechanical and thermal properties of flexible resins are usually inferior and must be considered in design calculations.

*(d)* Forming of sheets into vessel shapes can introduce high internal stresses, which can cause cracking, warping, and possibly environmental stress cracking in service. Thermoforming above the softening temperature will reduce these residual stresses. Post-stress relieving (annealing) may be required. Cold forming may be used, especially for thin linings, but the resulting high internal stresses will be considered.

## M12C-600 HEATING AND COOLING DESIGNS

*(a)* The heating system for the contents of a dual laminate vessel will be designed to avoid any damage to the vessel. The preferred heating design is to use an external heat exchanger with inlet and outlet nozzles on the vessel. Internal heating coils and the inlet from the external heat exchanger must be carefully designed so that the vessel nozzles are not overheated. The heating pipe penetrating the vessel should pass through special flanges of a material that can withstand the highest temperature expected. These flanges will be installed in an oversize nozzle. In addition, the support of the internal coils must be designed carefully to avoid high wall stresses due to internal inertia from agitated contents, as well as thermal stresses due to differential thermal expansion.

*(b)* Cooling of the contents of a dual laminate vessel may cause damage due to cold temperature embrittlement of the plastic.



Copyright ASME International
Provided by IHS under license with ASME
No reproduction or networking permitted without license from IHS
Not for Resale

*(c)* Freeze protection from low ambient temperatures may be provided by wall heaters that are designed to avoid damage from high temperatures.

*(d)* Thermal stresses for all thermal extremes, as well as transient conditions, will be analyzed. See para. M12C-500(c).

## ARTICLE D
## FABRICATION

### M12D-100 SCOPE AND OPTIONS

This Article sets forth the required and recommended fabrication details that are used to fabricate a thermoplastic lined RTP vessel. Where necessary, fabrication details of the RTP part of the dual laminate vessel, as modified by the requirements of the thermoplastic lining, are presented. The general provisions of Part 4 of this Standard do apply.

This Article covers the forming and welding of the vessel lining walls and ends; the installation and fabrication details for nozzles, manways, and other attachments; and the RTP modifications where changes from Part 4 are necessary due to the lining fabrication requirements.

Fabrication options are as follows.

*(a)* The thermoplastic lining will be fabricated before the RTP laminate is overlaid.

*(b)* The vessel lining is fabricated by formed (thermoforming or cold forming) components and welding them together.

*(c)* The end closure (or vessel head) linings may be fabricated separately from the shell lining. The RTP structure may be laid up on the separate parts or after the entire vessel lining is assembled.

### M12D-200 MACHINING OF THE THERMOPLASTIC LINING

Sheets, plates, edges of heads, and other parts (internal ends or projections of nozzles, manway necks, etc.) may be cut to shape and size by mechanical means such as machining, drilling, shearing, sawing, grinding, or by other processes that are not detrimental to the lining material. After machining, all burrs, flashing, and other loose material will be removed prior to further fabrication or use. Excessive stresses may be induced by machining processes and stress relief may be required.

### M12D-300 FORMING

Thermoplastic sheets may be formed into the required shapes using established procedures that are in the Fabricator's Procedures Manual (see para. M12G-540).

### M12D-310 Limits on Thinning of Lining During Forming

All forming processes will reduce the thickness of the lining. Design and the forming process conditions will be such that the thinnest area of the lining after forming is at least 90% of the nominal sheet thickness.

### M12D-320 Thermoforming

In general, thermoforming is preferred over cold forming because thermoforming requires much less force and the internal stresses after forming are minimized. More brittle materials and materials with greater thickness are more difficult to form and thermoforming may be necessary to avoid cracking or substantial spring-back.

### M12D-400 WELDING

This section sets forth rules and guidelines for the fusion welding of thermoplastic linings to generate the vessel lining configuration. Included are welds to assemble shells, end closures, nozzles, manways, and wall attachments.

The types of welding allowed for this Standard are:

*(a)* hot gas welding;

*(b)* extrusion welding [but see para. M12D-421(b) for limitations];

*(c)* hot plate welding;

*(d)* flow fusion welding.

All welds will be full penetration welds.

### M12D-410 Welder Qualification

All welds will be made by a Welder qualified in that type of welding and using that type of thermoplastic material. Procedures for Welder qualification are set forth in Article H.

### M12D-420 Welding Procedures

*(a)* The gap between sheets before welding will be no more than 0.063 in. (1.6 mm) at any location. For assembly of large components (over 6 ft in diameter), the gap will not exceed 0.125 in. (3 mm) at any location. For assembly after RTP overlay, the maximum



Copyright ASME International
Provided by IHS under license with ASME
No reproduction or networking permitted without license from IHS

Not for Resale

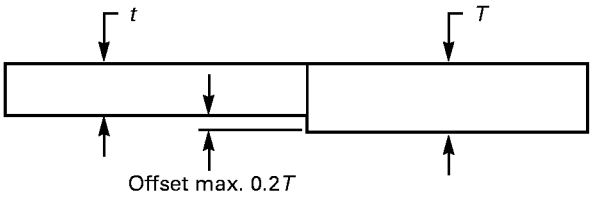


**FIG. M12D-1 MAXIMUM OFFSET ALLOWED FOR JOINTS BETWEEN SHEETS WITH DIFFERENT THICKNESSES**

gap between sheets will be no more than 0.125 in. (3 mm).

*(b)* Misalignment of all butt welds will be no more than 20% of the thickness of the thermoplastic material. For sheets of different thicknesses, see Fig. M12D-1.

*(c)* For sheets with fiber backing, the backing adjacent to the weld will be removed a distance of at least the sheet thickness from the weld bead. For hot plate and flow fusion butt welding, the amount of backing removed will not exceed $^{1}/_{16}$ in. (1.5 mm) from the weld bead.

*(d)* The Welder will initial a copy of the sheet/weld map placement showing the welds he or she has made by the end of each day.

*(e)* The gap between the sheet and nozzles will be limited to the thickness of the sheet.

### M12D-421 Hot Gas and Extrusion Welding

*(a)* The basic principles of extrusion welding and hot gas welding are similar, except that the extrusion welding rod is hot extruded using an extrusion screw.

*(b)* Extrusion welding will not be used on materials equal to or less than $^{1}/_{8}$ in. (3.2 mm) in thickness.

*(c)* Extruder temperatures and operating conditions will be that recommended by the material manufacturer. The Welder will verify that temperature settings on the extruder machine are appropriate for the material to be welded.

*(d)* Before extrusion welding, the Welder will visually inspect extrudate for contamination.

*(e)* Weld filler materials will be compatible with the sheet to be welded. In particular, the melt flow characteristics will be compatible and the manufacturer of the sheet will specify the appropriate requirements for weld filler materials to be used.

*(f)* When required by the material manufacturer, rod or parent material will be sanded or scraped to remove oxidation.

*(g)* For hot gas welding, the gas used will be clean and dry. The gas will be tested daily for contamination. The test procedures will be those described in ASTM D 4285 using an absorbent collector described in para. 3.1 of ASTM D 4285. Any deposits, including foreign particles, indicate that the gas is contaminated and unacceptable.

*(h)* Dry nitrogen, inert gas, or air will be used for hot gas and extrusion welding as recommended by the material manufacturer.

*(i)* For hot gas and extrusion welding, all joints must be beveled to a V or double V shape prior to welding. For sheets up to 4 mm thick, a V bevel is recommended; for 4 mm thickness and above, a double V bevel is recommended. Typical bevel angles are 30 to 35 deg (60 to 70 deg total) for butt welds. Typical bevel angles for T welds are 45 to 60 deg. Exceptions are FEP and PFA welds, where V bevels for butt welds will be 15 to 20 deg (30 to 40 deg total).

*(j)* The hot gas welds will be visually inspected and will meet the requirements of Table M12D-1 as well as the following requirements.

*(1)* Weld bead:

*(a)* Shape will be relaxed, indicating proper flow of material; elongation or stretching indicates excessive pressure or unacceptably high speed. See Fig. M12D-2.

*(b)* Stretch marks or fractures: None allowed. These indicate that the rod was too cold or indicate excessive pressure or speed during welding.

*(c)* Undercut: None allowed. These indicate rod too small for area prepared or stretching of rod during welding. See Fig. M12D-2.

*(d)* Bridging: None allowed. Bridging may be caused by improper temperature or pressure during starts and stops, relaxing of the rod pressure during welding, or improperly cleaning the V bevel prior to welding.

*(e)* Lack of fusion: None allowed. See Fig. M12D-2.

*(2)* Flow lines evenness: Both sides of the weld bead must show continuous flow of molten material at the side of the weld bead. See Fig. M12D-3.

*(3)* Heat affected zone: Not all plastics exhibit a visual heat affected zone; see Fig. M12D-4.



Copyright ASME International
Provided by IHS under license with ASME
No reproduction or networking permitted without license from IHS
Not for Resale

## TABLE M12D-1 VISUAL WELD DEFECTS

| Imperfection | Allowable |
|---|---|
| Cracks | None |
| Blisters | |
| within the thermoplastic liner | None |
| between the liner and the RTP laminate | None |
| debonding of the thermoplastic liner | None |
| **All Welds** | |
| Flow lines | Uniform on both sides of weld |
| Undercut | None |
| Heat affected zone heat pattern | Same width on both sides of weld |
| **Hot Gas Welds** | |
| Contamination evidence by discoloration or contaminants in the flow lines | None |
| Crown or overbead | Relaxed and no more than half the sheet thickness above the sheet surface |
| Misalignment | Maximum one-fifth of sheet thickness |
| Bridging over at starts and stops | None |
| Discoloration | |
| charring or burning | None |
| brown from use of air at high temperature | None |
| **Hot Plate Butt Fusion Welds** | |
| Flow lines | Height of flow line extrusions does not exceed thickness of the plastic sheet |
| Voids in fusion zone | None |
| Thickness of sheet allowed | Minimum 0.090 in. (2 mm) |
| Misalignment | Maximum one-tenth of sheet thickness |
| **Extrusion Welds** | |
| Crown or overbead | Maximum $\frac{1}{8}$ in. above sheet thickness |
| **Cap Strip Welds** | |
| Flow lines | Uniform on both sides of weld; no larger than $\frac{1}{16}$ in. |
| Distortion after weld | In accordance with UBRS |
| Voids | None |
| Discoloration | No brown color |
| Spark test for root weld | Special test required before cap strip applied |



--`,,`,,`-`-`,,`,,`,`,,`---
Copyright ASME International
Provided by IHS under license with ASME
No reproduction or networking permitted without license from IHS
Not for Resale

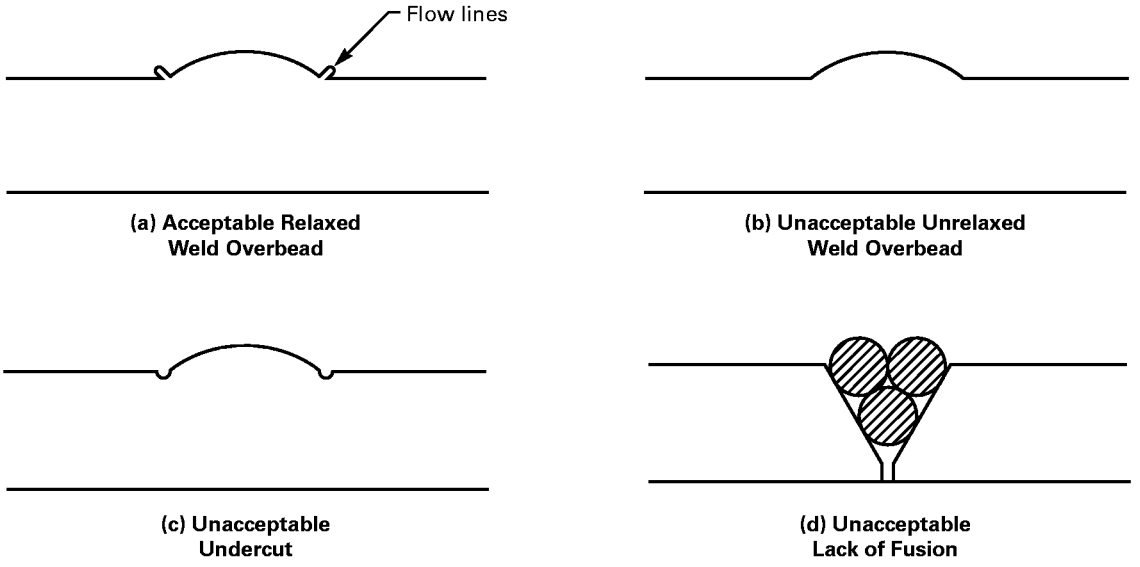


**FIG. M12D-2 VISUAL FEATURES OF HOT GAS WELDS**

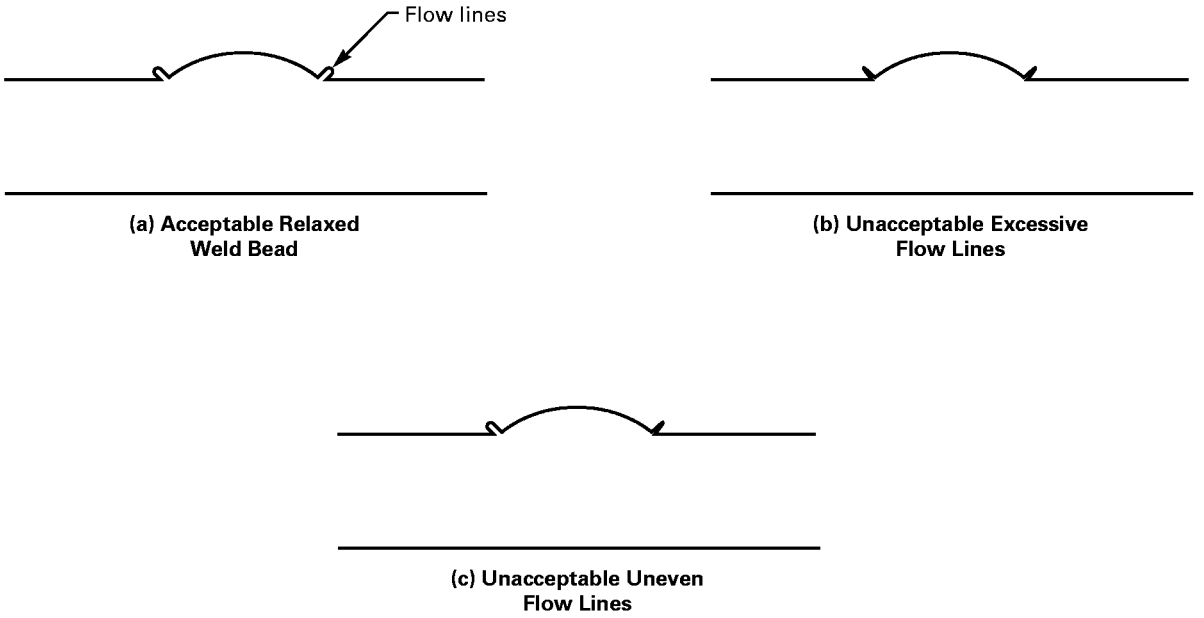


**FIG. M12D-3 ILLUSTRATIONS OF FLOW LINES**

*(k)* Extruded weld visual inspection will meet the requirements of Table M12D-1 as well as the following.

*(1)* Free of porosity. One cause of porosity is excessive heat during extrusion.

*(2)* No lack of fusion. Low temperature can cause this lack of fusion.

*(3)* An even bead showing no lumps, bumps, or excessive irregularities.

*(4)* Some surface gloss showing the existence of heat affected zones will be visible.

*(l)* Safety

*(1)* The welding process involves more than just



--`,,`,,`-`-`,,`,,`,`,,`---
Copyright ASME International
Provided by IHS under license with ASME
No reproduction or networking permitted without license from IHS
Not for Resale

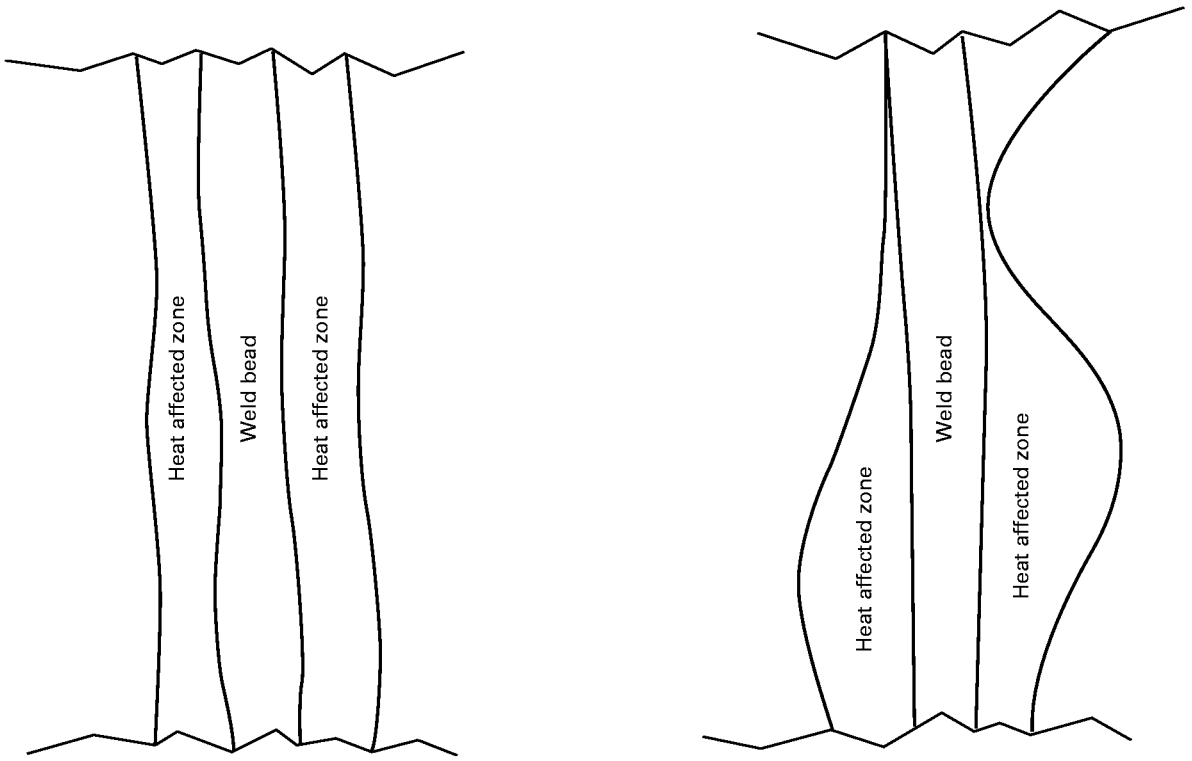


(a) Acceptable

(b) Unacceptable

**FIG. M12D-4 HEAT AFFECTED ZONE PATTERNS**

the handling of hot equipment and plastic. When inert gas or nitrogen is used to melt the thermoplastic, special attention to ventilation is required. In addition, some plastics may evolve fumes that can affect workers. These possible safety hazards must be considered prior to welding. Many welding procedures are performed inside tanks or on-site. These require special safety procedures.

*(2)* Normal safety practices will be followed with special consideration to the fact that welding guns exceed the flash point of most solvents.

*(3)* Prior to welding, the Fabricator will establish a safety procedure and include it in the Fabricator's Procedures Manual (see para. M12G-540).

### M12D-422 Hot Plate Fusion Welds

*(a)* In hot plate fusion welding, no filler rod is used. A heated plate is used to apply heat and a machine is used to control pressure and alignment.

*(b)* Prior to welding, the welding machine will be inspected and the following verified:

*(1)* proper plate temperature according to thermoplastic manufacturer's recommendations;

*(2)* proper heat-up pressure and time;

*(3)* proper transfer rate;

*(4)* proper weld pressure and time.

*(c)* Prior to welding, verify that the two pieces to be welded have been properly aligned and that the weld faces are shaped properly.

*(d)* After welding, accelerated cooling will not be used.

*(e)* Weld bead visual inspection will meet the requirements of Table M12D-1 as well as the following requirements:

*(1)* no porosity or air bubbles present;

*(2)* bead "roll over" is not excessive; see Fig. M12D-5.

**M12D-423 Flow Fusion Welding.** Flow fusion involves clamping each material to be joined in a special machine and then using heat to cause them to fuse together under the pressure caused by expansion of the material. Specialized custom equipment is used for this type of welding. The fabricator's equipment, procedure, and the past testing of welds will be reviewed to assure viability of the process used. Welds will be visually inspected using the applicable criteria from Table M12D-1.



Copyright ASME International
Provided by IHS under license with ASME
No reproduction or networking permitted without license from IHS

Not for Resale

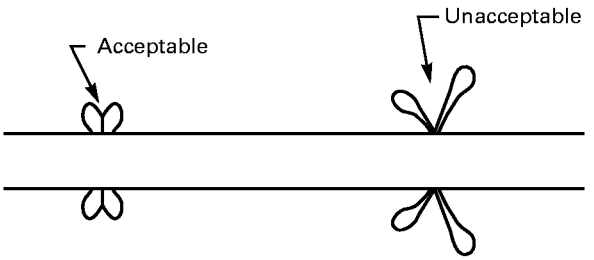


**FIG. M12D-5 BUTT FUSION WELDS SHOWING MELT FLOW LINES**

### M12D-424 Cap Strip Welding

*(a)* Cap strip welding is similar to hot gas welding, except that a flat strip of the same thermoplastic material is applied over an existing weld. The flat strip may have fiber backing impressed on the face to be bonded to the RTP overlay. The cap strip with a fiber backing provides continuity of bond between the thermoplastic lining and the RTP structural overlay. When applied on the front of a weld, the cap strip provides added mechanical strength. A possible disadvantage is that welding cap strips induces additional heat stress.

*(b)* Inspections will show that the requirements of Table M12D-1 as well as the following are met.

*(1)* Preparation. For fabric-backed sheet, when a cap strip is applied over welds, the fabric must be removed from the sheet in the weld area at least as wide as the cap strip.

*(2)* Excess overbead must be removed to offer a near-flat surface for the cap strip. Care will be taken to avoid cutting into the base sheet material and to avoid excessive surface scratches.

*(3)* After producing a flat surface, the prepared area must be fully inspected and spark tested prior to application of the cap strip.

*(4)* Warpage. The cap strip weld must be flat and relaxed, indicating consistent fusion and the lack of bridging or air voids under the strip. See Table M12D-1.

## M12D-500 TESTS FOR DEFECTS IN WELDS

### M12D-510 High Voltage Spark Test

All welds with adequate access will be tested with a high voltage spark tester to find flaws or imperfections in the weld. Welds will be tested before application of the RTP overlay and after application of the RTP overlay but before shipment. Other plastic areas may also be tested, as long as properly functioning targets are present behind the area. The Fabricator will have written test procedures including calibration procedures. When the finished weld has a cap strip, root welds are to be spark tested after flattening the root weld bead and before the cap strip is applied; see para. M12D-424(b). Spark testing after welding on a cap strip may be accomplished if desired for added security.

*(a) Voltage.* AC voltage will be used. The spark tester will be set to at least 5 kV for each millimeter of material thickness. This high voltage will be specifically calibrated using an instrument to indicate the actual voltage and verified using a spark length test. Voltage settings will not be so high that they damage the parent plastic materials; dielectric properties will be reviewed before testing. Each subsequent test on the same welds will be at a voltage 90% of the voltage used for the previous test.

*(b) Grounding.* Grounding strips will be applied on a permanent or temporary basis on all weld areas and any other area to be spark tested. The ground material will have consistent conductivity and permanent grounds will not inhibit bond strength. Acceptable permanent ground materials are thoroughly mixed carbon or graphite/resin putty (33 to 40% by weight carbon or graphite), carbon veil, carbon fiber tape, or conductive polyester fiber. The conductivity and continuity of the ground material will be tested before application of the RTP laminate by using the test procedure outlined in para. M12B-644.2.

*(c) Procedure.* The recommended spark testing procedure will be as outlined in ASTM D 5162 Test Method B. The vessel will be thoroughly cleaned and dried. The tester will be in continuous motion, as dwelling in one place could rapidly cause penetration and failure. A speed of about 1 ft/sec is recommended. Periodically (at least every 5 min) touch the tip to the conductive substrate to insure proper operation and good electrical continuity. Proper functioning after application of the RTP overlay will be confirmed by sparking to any efficient ground.

*(d) Safety.* Static electricity can build up in the ground material during high voltage spark testing, and



Copyright ASME International
Provided by IHS under license with ASME
No reproduction or networking permitted without license from IHS
Not for Resale

can cause arcing and personal injury. Good practice is to wire the ground material to a good in-the-ground ground to prevent accumulation of high static voltages.

### M12D-520 Gas Penetrant Tests

For welds where accessibility prevents a high voltage spark test, a helium or halide leak test is required. This test must be done before the RTP overlay is applied. Care will be taken to avoid damage to the liner from overpressure. An advantage of this test is that all defects which penetrate through the sheet, including welds, can be found.

## M12D-600 FLANGES, NOZZLES, AND MANWAYS

### M12D-610 Fabrication Options

Linings for nozzle necks and manway rounds may be fabricated from pipe or from sheet stock wrapped and welded to form the required tube shape. Linings for flange faces may be cut from sheet stock and welded to the neck, flued from sheet stock, or flared from tubing using thermoforming tools. The shell lining can be flued to join the neck lining or the tubing may be flared to join the shell at a short distance from the nozzle. This section will present some of these designs, with rules and recommendations.

### M12D-620 Shell-Neck and Neck-Flange Designs

*(a)* Figures M12D-6 and M12D-7 show acceptable constructions for nozzle and manway linings. The thickness of the lining for the necks and flange faces must be at least as thick as the lining of the shell. The thickness of the lining for nozzle necks will not be more than two times the nominal thickness of the sheet used for construction of the vessel shell. Welding on both sides of all T joints is preferred because of the increased strength and balanced residual weld stresses. In case access to both sides of a T joint is not possible, welding from one side of the T joint is acceptable as long as full penetration is achieved. Nozzle and manway constructions other than those shown in Figs. M12D-6 and M12D-7 will be agreed to by the User before fabrication starts.

*(b)* Figure M12D-8 shows typical designs for bottom nozzles.

*(c)* All welds will be high voltage spark tested. The only exception will be where access to the inside of the weld with the spark tester is impossible. This testing requires appropriate conductive targets to be installed behind welds. In cases where there is access to the inside of the vessel, spark testing can be accomplished after installing the target and before the remainder of the RTP overlay is applied.

*(d)* The RTP structural overlay may be applied to the nozzle/manway neck and flange before attachment to the shell or end closure. Alternatively, if the lining can be supported suitably, the RTP structural overlay may be applied after weld attachment of these appurtenances.

## M12D-700 INTERNAL ATTACHMENTS

*(a)* Internal attachments include baffles, dip pipes, spargers, and others. Since these are ordinarily supported by attachment to the thermoplastic lining, special care in design and fabrication is necessary to insure that lining forces and lining-to-RTP bond forces are low enough to avoid failure; see para. M12C-400.

*(b)* In case an attachment must be installed over a shell weld or an end closure weld, the weld overbead will be mechanically removed before installing the attachment. A preferred alternative approach for baffles and some other attachments is to cut out the attachment locally to accommodate the weld overbead.

*(c)* Reinforcement pads are required for all attachments to the liner; see Fig. M12D-9. A small drain hole may be provided on the bottom of each pad. For applications involving sanitary conditions, such as food or pure water, this drain hole will not be installed.

## M12D-800 REPAIR PROCEDURES

### M12D-810 Scope

This section sets forth general criteria and repair procedures that are to be used to correct nonconformities in liners in dual laminate vessels before they may be accepted as complying with this Standard. Where repair involves removal and replacement of any of the RTP structural laminate, the procedures of Mandatory Appendix M-7 will also apply.

### M12D-820 General Conditions

In general, when the nonconformities in the defective or damaged liner, bond, or related RTP laminate are repaired, the repair will ensure that the final area will have the same physical strength and chemical resistance as the specified original laminate. All defects and



Copyright ASME International
Provided by IHS under license with ASME
No reproduction or networking permitted without license from IHS
Not for Resale

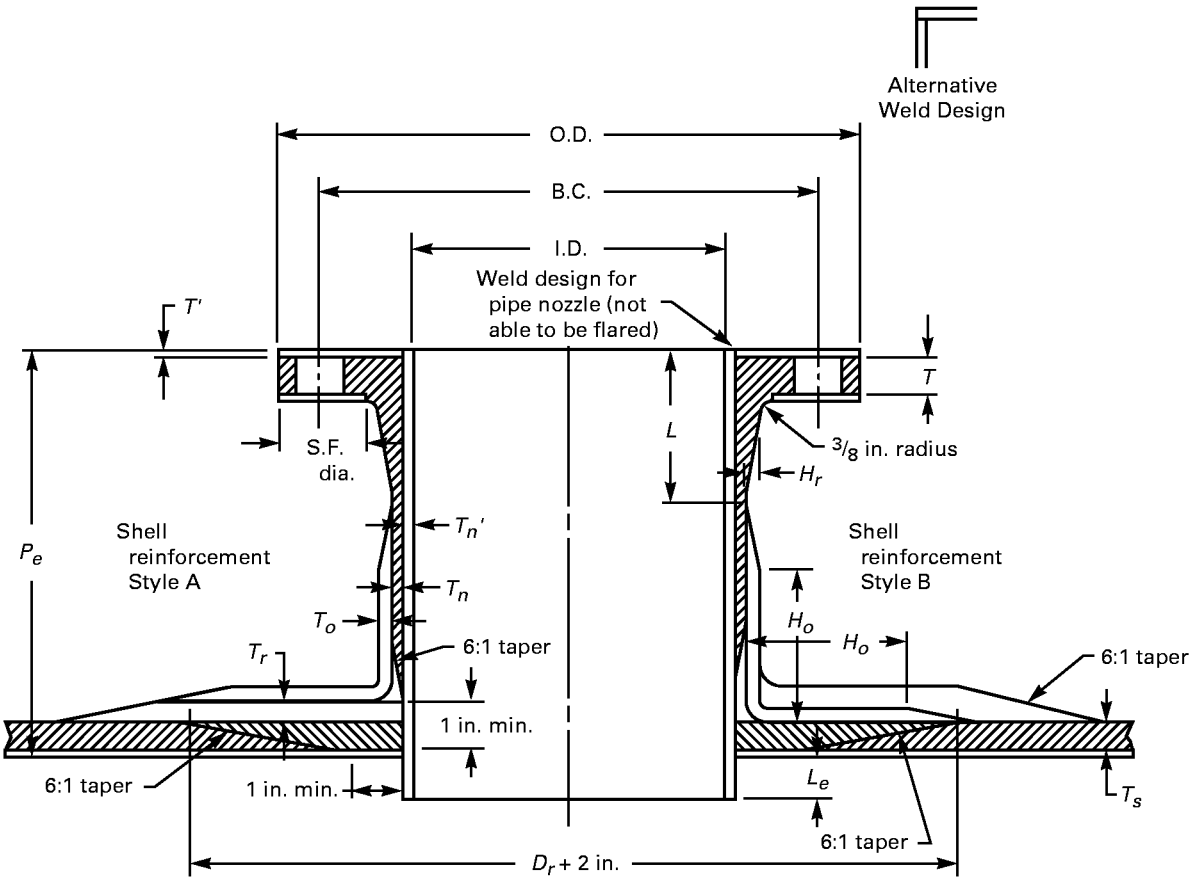


**FIG. M12D-6 NOZZLE CONSTRUCTION FOR PENETRATING NOZZLE**

completed repairs must be recorded in writing in a repair log, which will become part of the quality assurance documents for that vessel. Other general conditions outlined in Mandatory Appendix M-7 appropriate to dual laminate repairs also apply.

## M12D-830 Nonconformities

Vessels fabricated to this Standard may be repaired to correct nonconformities prior to certification and stamping, provided that all the following conditions are met.

*(a)* The general requirements of para. M7-210 as they apply to repair of dual laminates are met.

*(b)* The thermoplastic manufacturer's procedures and limitations on rewelding are followed.

*(c)* The nonconformities must be classified as repairable as indicated in para. M12D-840.

*(d)* The Fabricator will provide detailed written procedures for each kind of repair that will be made.

*(e)* The total amount of area repaired by patching or replacing lining after the RTP has been applied will not exceed 2% of the total inside liner area or 3 $ft^2$, whichever is greater.

*(f)* The total length of weld joints that are repaired after the RTP overlay is applied will not exceed 2% of the total length of welds in the thermoplastic liner. All welds can be replaced prior to application of the RTP overlay.

*(g)* Weld repairs are accomplished by a qualified Welder qualified on the same material as the liner and in accordance with the Fabricator's qualification procedures and with this Standard.

## M12D-840 Repairable Nonconformities

Repairable nonconformities are:

*(a)* all weld defects in Table M12D-1;

*(b)* debonded areas;

*(c)* blisters;



Copyright ASME International
Provided by IHS under license with ASME
No reproduction or networking permitted without license from IHS
Not for Resale

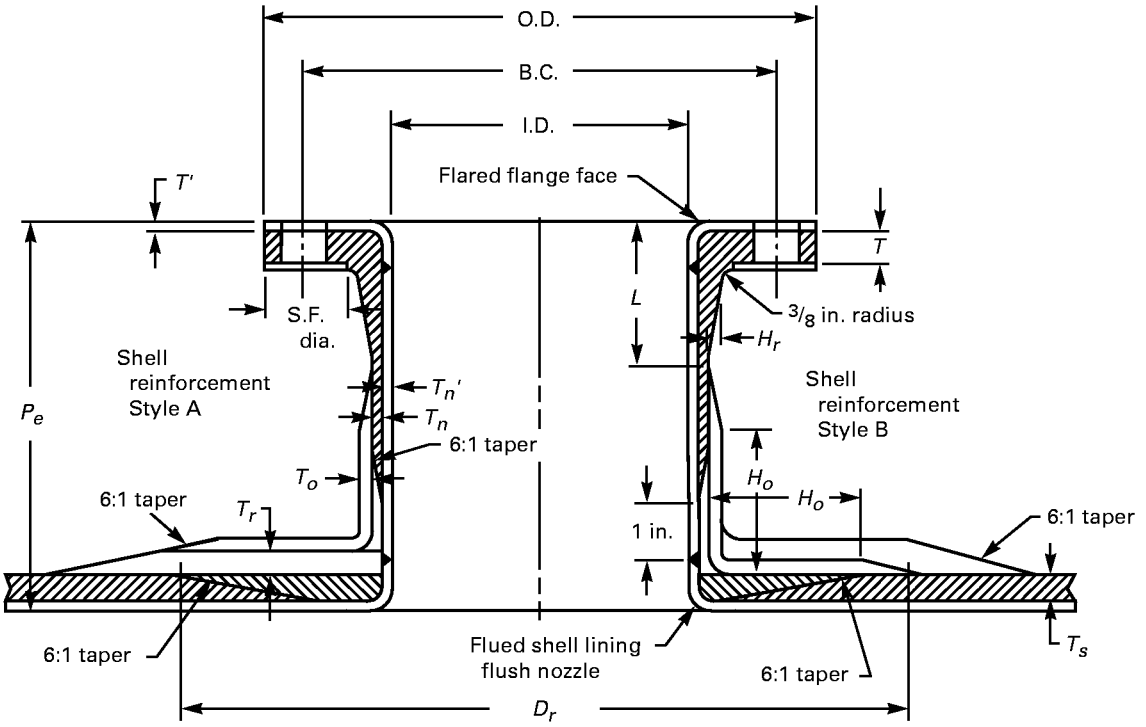


**(a) Style A**

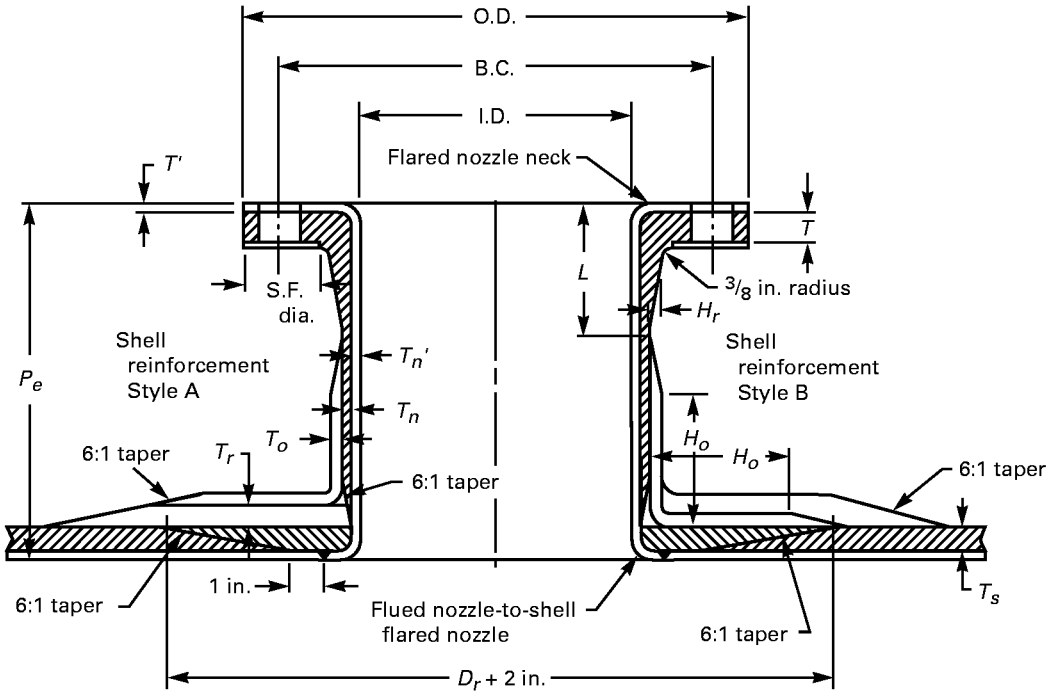


**(b) Style B**

**FIG. M12D-7 NOZZLE AND MANWAY CONSTRUCTIONS**



Copyright ASME International
Provided by IHS under license with ASME
No reproduction or networking permitted without license from IHS
Not for Resale

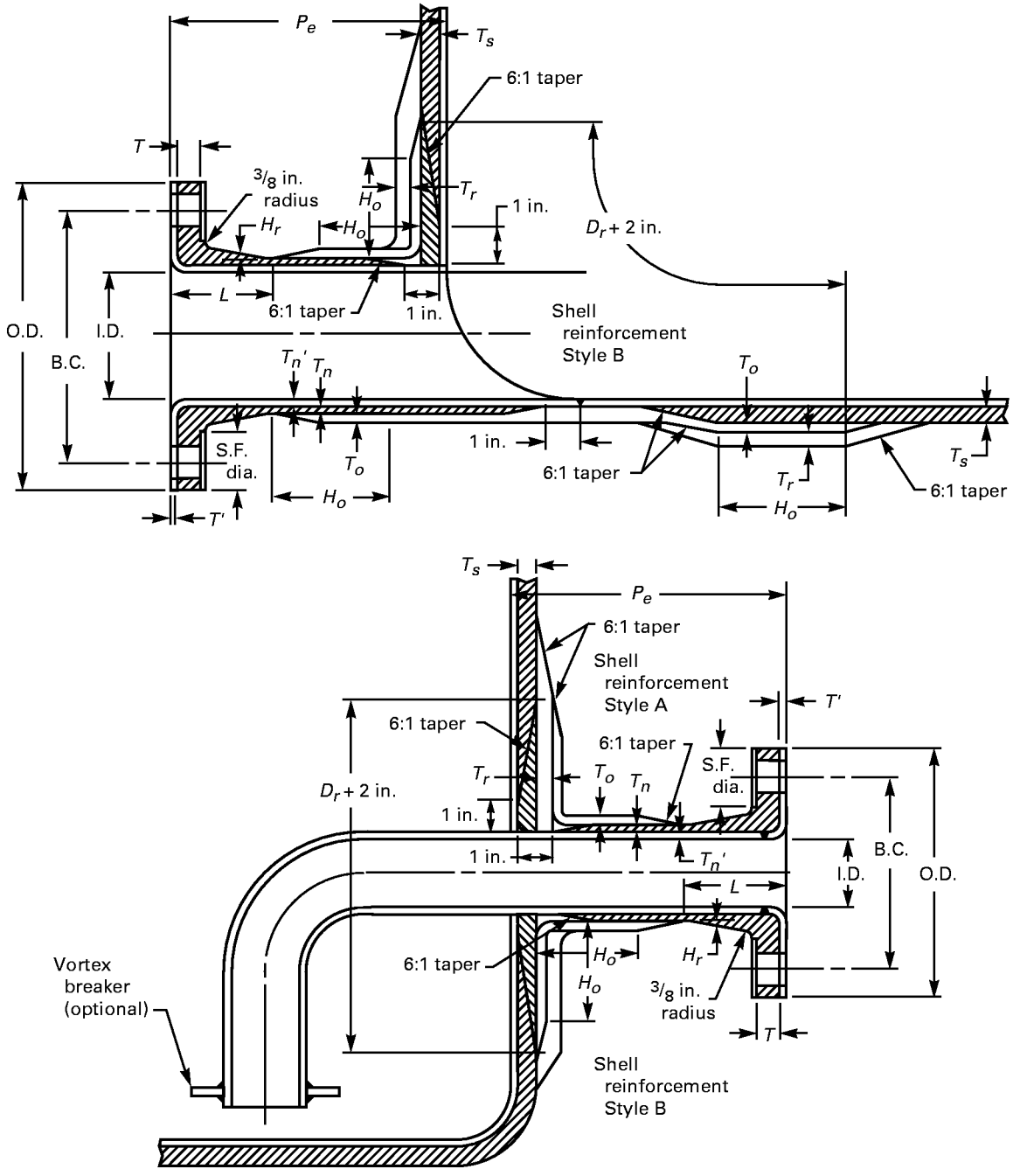


GENERAL NOTE: Special consideration is to be made to address the cantilever, pump, and vortex forces.

**FIG. M12D-8 BOTTOM NOZZLE CONSTRUCTIONS**



Copyright ASME International
Provided by IHS under license with ASME
No reproduction or networking permitted without license from IHS Not for Resale

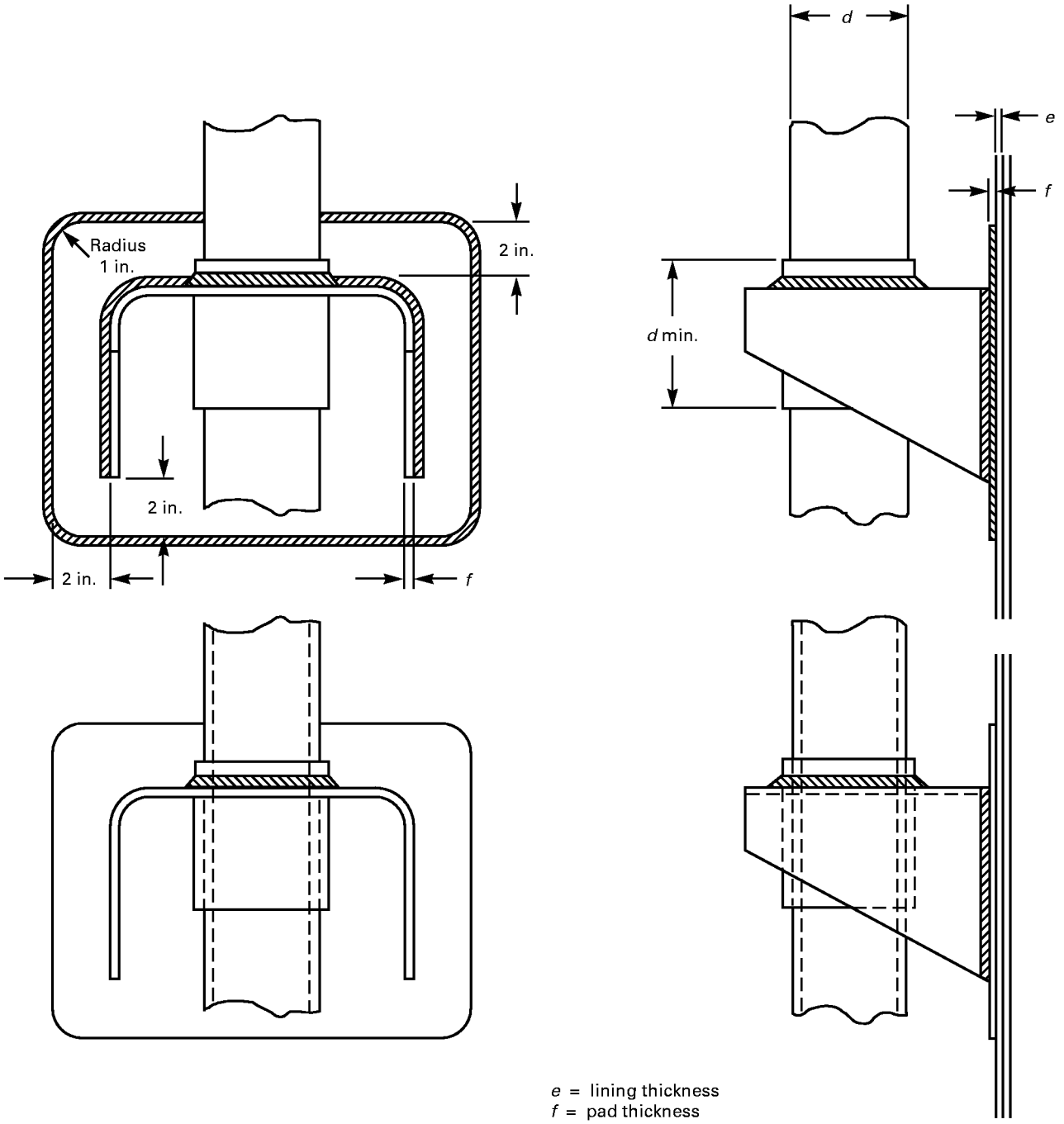


GENERAL NOTE: Special consideration is to be taken for tank linings less than 0.1875 in. thick.

**FIG. M12D-9 TYPICAL DIP PIPE GUIDE BRACKET CONSTRUCTIONS**



--`,,,`,,-`-`,,`,,`,`,,`---

Copyright ASME International
Provided by IHS under license with ASME
No reproduction or networking permitted without license from IHS

Not for Resale

*(d)* incorrect location of nozzles only when the correct nozzle is relocated far enough away so that reinforcing pads do not overlap;

*(e)* liner surface nonconformities contained in Table M12B-4. Scratches may be polished or scraped out, except that the thickness of the sheet will not become too thin; see Table M12B-4;

*(f)* stress relief not accomplished when required;

*(g)* weld defects detected in the final inspection by high voltage spark test when the vessel has less than 1% of total weld length plus 12 in.

### M12D-850 Irreparable Nonconformities

The following nonconformities will not be considered repairable. A vessel that has any one of these nonconformities will not be certified as being fabricated in accordance with this Standard.

*(a)* Incorrect material: sheet, filler rod, strip, etc.

*(b)* Weld defects detected during final inspection by high voltage spark test which exceed the following:

*(1)* 2% of total weld length plus 12 in. prior to hydrotest;

*(2)* 1% of total weld length plus 12 in. after hydrotest (rehydrotest not required).

*(c)* Liner is thinner than lower tolerance on thickness.

*(d)* Thermoformed components are less than specified thickness.

*(e)* Ground strip for spark test target omitted or insufficiently conductive.

## M12D-900 APPLICATION OF THE RTP OVERLAY

### M12D-910 Application of Spark Test Targets

Prior to application of the RTP overlay, all of the conductive spark test targets must be applied. As a minimum, all welds will have a conductive target on the exterior surface of the liner prior to application of the RTP overlay. See para. M12D-500.

### M12D-920 Testing Bond Strength Between Liner and RTP Overlay

Before fabrication starts, the Fabricator will insure adequate bond strength by performing the tests required in para. M12B-614.4. In addition, for dual laminate vessels with PVC or CPVC liners, these tests will be performed on each bonding resin batch and on each lot of sheet material used. The bond strength test results will be documented and will meet the minimum requirements of para. M12B-614.4.

### M12D-1000 INSPECTION

In addition to the requirements of Article E, the Inspector will visually check the interior and exterior surfaces of the lining before the RTP overlay is applied and the exterior surface of the RTP overlay after it is applied. All the visual requirements of Tables M12D-1 and M12E-1 will be met. In particular, this inspection will insure that cap strips and conductive targets are installed properly. See para. M12E-220.

# ARTICLE E
# INSPECTION AND TEST

### M12E-100 SCOPE

This Article covers inspections and tests required on a dual laminate vessel. It is intended to insure that the completed vessel has been designed and fabricated in accordance with the requirements of the latest revisions of the design, of the approved drawings, of the UBRS, and of this Standard.

This Article is in addition to the inspection and testing of the RTP structural laminate of dual laminate vessels which is provided in Part 6 of this Standard. However, some inspections and tests of the lining, the bond, and the RTP laminate should or may be accomplished at the same time.

When the corrosion barrier of the RTP laminate is replaced by a thermoplastic lining, the testing for quality of the lining as provided in this Article will replace those requirements for the corrosion barrier in Part 6.

### M12E-200 FINAL INSPECTION

*(a)* In addition to the documents the Fabricator is required to provide the Inspector in accordance with para. 6-900(a), the following documents related to dual laminate inspection will be provided:

*(1)* Welder qualification records for individual Welders who made welds in the vessel;

*(2)* current weld map and sheet placement;

*(3)* high voltage spark test records;

*(4)* material logs for all materials used.

*(b)* Paragraphs M12E-210 and M12E-220 describe the minimum basic tests relating to the thermoplastic lining that must be made, witnessed, or reviewed by



Copyright ASME International
Provided by IHS under license with ASME
No reproduction or networking permitted without license from IHS
Not for Resale

**TABLE M12E-1 LINING VISUAL INSPECTION ACCEPTANCE CRITERIA**

| Imperfection | Definition of Imperfection | Allowed | Comments |
|---|---|---|---|
| Omission of cap strip | Omission when required | Not acceptable | Repairable only before application of RTP structure |
| Cracks | Linear ruptures of the lining | None | See Note (1) |
| Debonding | Lack of bond between lining and RTP structure | None | See Note (1) |
| Foreign inclusions | Particles in the lining which are not of the plastic composition | None | See Note (1) |
| Dents, pits, grooves | Surface irregularities in the lining | Maximum depth 10% of sheet thickness, maximum size $\frac{1}{8}$ in. diameter or 1 in. long | See Note (1) |
| Blisters (internal) | Pores within plastic sheet | None | See Note (1) |

NOTE:
(1) These imperfections may be repaired if approved by the Inspector and the Fabricator's Quality Assurance Manager, and written procedures are received and approved.

the Inspector prior to or at the time of the final inspection.

### M12E-210 High Voltage Spark Test

The Inspector will witness the last high voltage spark test performed. This last test will normally be after the hydrotest. Any spark test indication of a defect will be cause for rejection until the defect is repaired and retested with satisfactory results.

### M12E-220 Lining Imperfections: Visual Inspection

*(a)* During fabrication, the Fabricator will make all checks necessary to assure that the lining and the lining–RTP bond meet the requirements of this Standard, particularly the requirements of Tables M12B-4, M12D-1, and M12E-1. The Fabricator's Quality Control Program will include procedures and forms to be used to control the ongoing process of lining fabrication and lining–RTP bond fabrication so as to assure that imperfections are within required tolerances prior to final inspection.

*(b)* The Inspector will visually check interior surfaces of the lining and the exterior surface of the RTP overlay. The Inspector will insure that all visual requirements of Tables M12B-4 and M12E-1 are met.

*(c)* The final visual inspection will be made after the last high voltage spark test, the hydrotest, and the acoustic emission (if used) tests are completed.

*(d)* As provided in para. 6-940(e), the Inspector will record the results of the visual inspection in the inspection report.

## ARTICLE F
## SHIPPING AND HANDLING

### M12F-100 SCOPE

This Article covers special requirements for shipping and handling dual laminate vessels at low temperatures.

### M12F-200 PRECAUTIONS TO PREVENT MECHANICAL DAMAGE

*(a)* Since many of the thermoplastics used for liners are brittle and become more sensitive to mechanical shock as temperatures decrease, precautions must be taken in handling and storing to insure that impact or high stresses are avoided. In particular, polypropylene, PVC, CPVC, and PVDF homopolymer should be shipped and stored above 32°F (0°C). Special precautions to avoid mechanical shock are required, especially if ambient temperatures are below these limits.

*(b)* Thermal stresses due to sudden changes in temperature will be avoided, as these can cause cracking of the thermoplastic liner. An example is moving a vessel from a heated area to the outside in cold weather.

### M12F-300 INSPECTION AFTER SHIPMENT AND INSTALLATION

When a vessel arrives at the User's facility and before unloading from the transport vehicle, a visual inspection (internal and external) will be carried out to detect any damage that may have occurred during shipping. After installation of a vessel at the User's



Copyright ASME International
Provided by IHS under license with ASME
No reproduction or networking permitted without license from IHS
Not for Resale

facility, a high voltage spark test is required to detect any defects in the liner that may have occurred during shipping, handling, and installation.

## ARTICLE G
## SHOP QUALIFICATION

### M12G-100 SCOPE

This Article covers requirements a Fabricator will meet in order to qualify capability for fabricating dual laminate vessels in accordance with this Standard. These requirements are in addition to those set forth in Part 7.

### M12G-200 GENERAL

In addition to the requirements of para. 7-210 for the shop survey, the ASME survey team will verify that the requirements of this Article are met.

### M12G-300 FABRICATOR'S FACILITIES AND EQUIPMENT

In addition to the facilities specified in para. 7-300, the following facilities and equipment will be available for qualification during the shop survey:

*(a)* areas designated for storage of plastic sheet, weld rod, and other plastic shapes;

*(b)* areas designated for storage of semifinished components of dual laminate vessels;

*(c)* separate shop fabrication areas for assembling thermoplastic liners with special provisions for controlling dust, proper ventilation, cleanliness, and temperature;

*(d)* equipment for thermoplastic welding including appropriate gas supply [see paras. M12D-421(g) and (h)];

*(e)* temperature-measuring instruments capable of measuring welding and thermoforming temperatures with accuracy of ±2°C;

*(f)* equipment for thermoforming plastic sections of vessels including flaring and fluing for nozzle attachment [see para. 7-300(b)];

*(g)* laboratory equipment for evaluation of welds in accordance with para. M12H-400, except that tensile test services may be obtained from a qualified outside laboratory;

*(h)* inspection equipment for determining the quality of welds, including high voltage spark tester;

*(i)* equipment (internal or at an external facility) for determining the bond strength between the thermoplastic liner and the RTP overlay (see para. M12B-614.4).

### M12G-400 PERSONNEL

The Fabricator's organization will include specific personnel designated and qualified for the following functions:

*(a)* welding thermoplastic parts, and training and evaluating Welders (see Article H);

*(b)* designing thermoplastic lined vessels, including knowledge of the technology of welding thermoplastics. As authorized in para. 7-400, for RTP vessels this function may be performed by outside qualified engineering design personnel.

### M12G-500 DEMONSTRATION OF CAPABILITY

#### M12G-510 Welding Capability

Each Fabricator's shop must demonstrate the ability to fabricate thermoplastic liners, including welding, to required quality levels. A Welder qualification record (see para. M12H-100) will be maintained showing Welder capability to weld thermoplastic parts. The records will clearly show qualification records for all the following:

*(a)* type of welding; i.e., hot gas butt welding, nozzle-to-shell welding, cap strip welding, etc.;

*(b)* specific thermoplastic material;

*(c)* specific Welder's name;

*(d)* certification for each separate combination of (a), (b), and (c) above (see Table M12H-1).

#### M12G-520 Bonding Capability

Each Fabricator's shop must demonstrate capability to bond the RTP overlay to thermoplastic liners with sufficient strength to satisfy the requirements of para. M12B-614.4. The shop survey team will verify bond strength test records and will determine that the Fabricator has the equipment and trained personnel to determine bond strength. Note that a bond strength test using the specific thermoplastic and RTP overlay for any proposed vessel will be made and results reported as part of the technical proposal for all responses to requests for quotation for dual laminate vessels.

#### M12G-530 Demonstration Vessel

*(a)* The Fabricator will produce a demonstration vessel, which will be inspected by the ASME shop



Copyright ASME International
Provided by IHS under license with ASME
No reproduction or networking permitted without license from IHS
Not for Resale

survey team. For the purposes of this qualification demonstration vessel, the lining system will be divided into the following lining classes:

| Lining Classification | Demonstration Vessel Top Half | Demonstration Vessel Bottom Half |
|---|---|---|
| A [Note (1)] | Fabric bonded lining | Chemically bonded lining |
| B [Note (2)] | Fabric bonded lining | Fabric bonded lining |
| C [Note (3)] | Chemically bonded lining | Chemically bonded lining |

NOTES:
(1) Fabric and chemically bonded thermoplastic linings.
(2) Fabric bonded thermoplastic linings only.
(3) Chemically bonded thermoplastic linings only.

A Fabricator selects the appropriate lining classification and builds a demonstration vessel accordingly. The Fabricator is restricted to fabricating vessels to this Standard in only that class of lined vessels for which he or she has built a demonstration vessel that has passed the qualification procedure.

*(b)* The demonstration vessel will be fabricated according to Fig. M12G-1 and Table M12G-1.

*(c)* A Fabricator who is not certified to fabricate solid RTP vessels may qualify for a restricted certificate for dual laminate vessels only.

### M12G-531 Demonstration Vessel Quality Requirements

*(a)* The demonstration vessel will be inspected by the ASME shop survey team and will meet the following requirements.

*(1)* The vessel will meet all visual inspection requirements of this Appendix.

*(2)* The layout of thermoplastic sheets and the weld map will conform to the requirements of para. M12C-300.

*(3)* The vessel will be tested to full vacuum. No debonding of the lining will be evident.

*(4)* The vessel will be high voltage spark tested and will not show any defects.

*(5)* The demonstration vessel will be cross-sectioned in accordance with Fig. M12G-2 to show the weld quality, the amount of liner thinning in thermoformed knuckles and flares for nozzles, flange construction and quality, bond between the liner and the RTP overlay, and the spark test targets. All of these areas will meet the requirements of this Appendix.

*(b)* Failure to meet any of the requirements in subparagraph (a) above will cause the Fabricator to fail for qualification to fabricate to ASME standards that class of dual laminate vessel.

*(c)* The vessel will be sectioned and placed on permanent display in the same manner as the RTP vessel.

### M12G-540 Procedures

The Fabricator will have the following procedures clearly defined and established:

*(a)* spark testing
*(b)* welding
*(c)* forming
*(d)* safety
*(e)* stress relieving

### M12G-550 Fabricator Certification

A Fabricator will be certified to fabricate only dual laminate vessels by constructing one demonstration vessel in accordance with Fig. M12G-1. The following conditions must be met.

*(a)* The hydrotest required in Mandatory Appendix M-6 is performed before the vacuum test required in M12G-531(a)(3).

*(b)* The visual requirements of the liner (Table M12E-1) are substituted for the visual requirements of the RTP liner.

*(c)* The RTP structural overlay of the dual laminate vessel is in complete accordance with requirements of this Standard.

## ARTICLE H
## QUALIFICATION OF WELDERS

### M12H-100 GENERAL REQUIREMENTS

*(a)* This Article specifies the rules for qualifying personnel to weld thermoplastic parts together. Thermoplastic linings will be assembled only by personnel who have been qualified in accordance with the requirements of this Article.

*(b)* A *Welder* is an individual who joins thermoplastic parts together using fusion bonding processes.

*(c)* The Fabricator will maintain up-to-date records relating to qualification of each Welder. These records will document the date of last qualification, and will include all calculations and test or inspection reports from internal and independent laboratory testing programs used in the process of qualification. These records are subject to review on request by all parties engaged in the process of procurement or inspection.



Copyright ASME International
Provided by IHS under license with ASME
No reproduction or networking permitted without license from IHS
Not for Resale

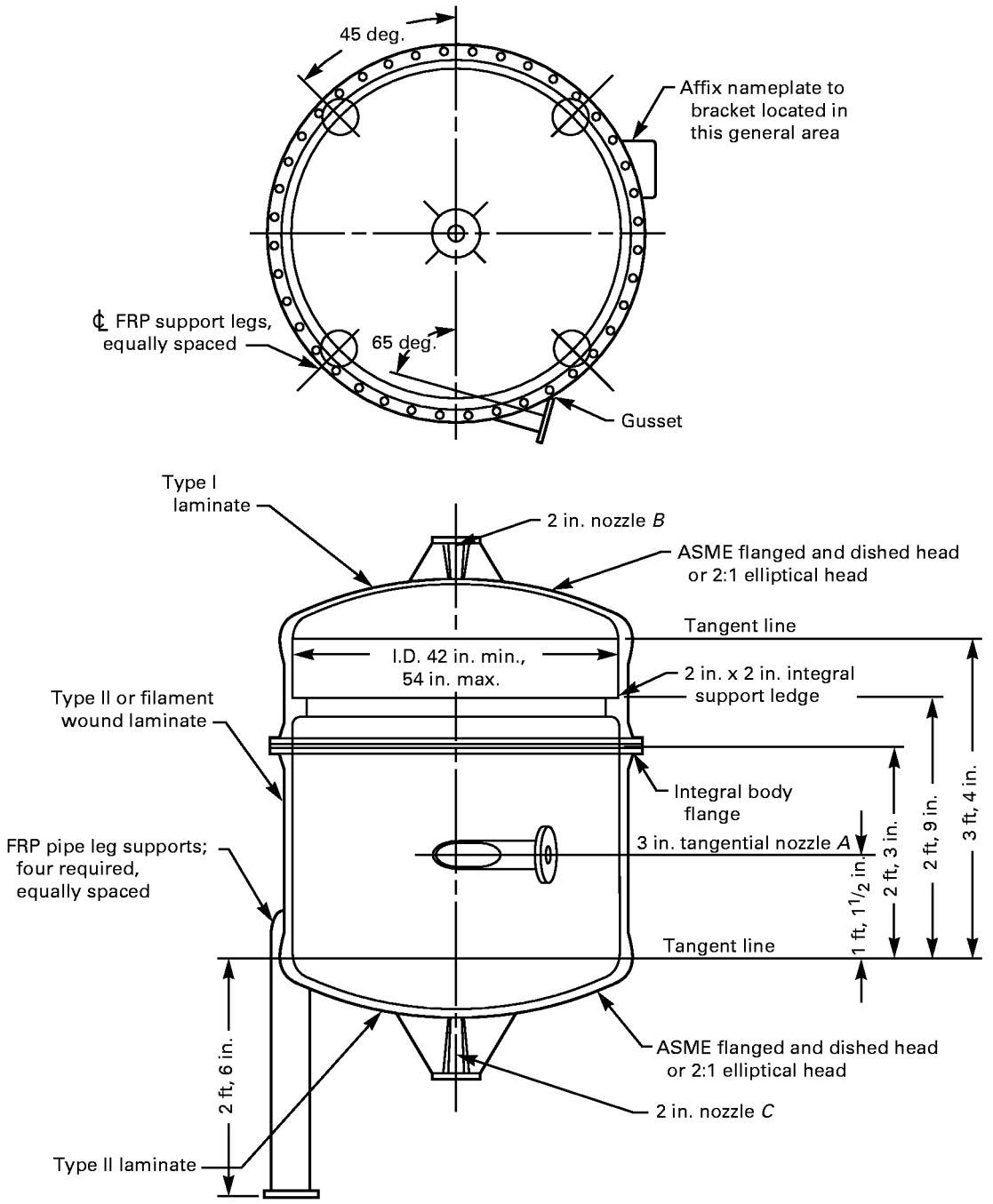


GENERAL NOTES:
(a) Laminate thicknesses are to be based on design pressure and temperature, and laminates are to be of the type specified here. See UBRS.
(b) Each head must have a weld seam with a length exceeding the tank radius.

**FIG. M12G-1 DUAL LAMINATE DEMONSTRATION VESSEL**



Copyright ASME International
Provided by IHS under license with ASME
No reproduction or networking permitted without license from IHS Not for Resale

(00)

## TABLE M12G-1 USER'S BASIC REQUIREMENTS SPECIFICATION (UBRS)
## As Required by the Provisions of ASME RTP-1



RTP Edition No. _____

UBRS Revision No. _____

User firm name Not applicable

User's Agent firm name Not applicable

Title of equipment ASME RTP-1 dual laminate demonstration vessel

User's designation no. ASME RTP-1 $\alpha$1

Installation location (name and address) Fabricator's shop

UBRS prepared by (User or User's Agent):

Name Mandatory Appendix M-12, ASME RTP-1 Phone no. Not applicable Date _____

Address _____

1. Equipment description (equipment sketch and nozzle schedule must be attached):

2. Additional Fabricator responsibilities:
   - [x] Special requirements
     - [ ] Acoustic emission testing
     - [x] Inspection or testing requirements not listed in the Standard Special, fully flooded (all air vented), ambient temp. water, proof hydrotest at 44 psig to 46 psig max.
     - [x] Full vacuum after hydrotest is complete
     - [x] Spark test after vacuum test
   - [x] Visual inspection acceptance level (refer to Table 6-1 of ASME RTP-1):
     - [x] Level 1
     - [ ] Level 2

     Quantity limitations for gaseous air bubbles or blisters _____



--`,,,`,,,-`-`,,`,,`,`,,`---
Copyright ASME International
Provided by IHS under license with ASME
No reproduction or networking permitted without license from IHS
Not for Resale

## TABLE M12G-1 USER'S BASIC REQUIREMENTS SPECIFICATION (UBRS) (CONT'D) (00)
## As Required by the Provisions of ASME RTP-1



RTP Edition No._____

UBRS Revision No._____

[ ] *Additional inspection aids/methods [refer to para. 6-940(c) of* ASME RTP-1] _____

3. Material selection

3.1 Material selection by:

[ ] Resin manufacturer (include data per section 4 of this document)

[ ] Fabricator (include data per section 4 of this document)

[ ] End User. Applicable User's specifications/standards, codes, ordinances, FDA requirements, etc. (list and specify; attach copies of local code/ordinance requirements) _____

[x] Other As required by Mandatory Appendix M-12

3.2 Material of construction:

Resin _____ Catalyst/cure system CoNap/MEKP

Veil _____ Barcol hardness per para. 6-910(b)(4) _____

[ ] Lift lugs: [ ] RTP [ ] Carbon steel [ ] Other _____

[ ] Hold down lugs: [ ] RTP [ ] Carbon steel [ ] Other _____

4. Chemical service data (must be provided when Fabricator or resin manufacturer is making material selection) _____

4.1 Description of process function and process sequence: Not applicable

4.2 Contents:

| | Concentration | | |
|---|---|---|---|
| Chemical Name | Max. % | Min. % | Exposure Time |
| Potable water | 100 | 100 | Continuous |
| | | | |
| | | | |
| | | | |

4.3 pH range: _____ max. _____ min.

5. Design

5.1 Design conditions:

| | Operating | Design |
|---|---|---|
| Internal pressure | 14 psig | 15 psig |
| External pressure | 0.0 psig | Full vacuum |
| Temperature | 80°F | 140°F |
| Specific gravity | 1.0 | 1.0 |
| Liquid level | Full | Full |



Copyright ASME International
Provided by IHS under license with ASME
No reproduction or networking permitted without license from IHS Not for Resale

(00)
(b)

## TABLE M12G-1 USER'S BASIC REQUIREMENTS SPECIFICATION (UBRS) (CONT'D)
## As Required by the Provisions of ASME RTP-1



RTP Edition No._____

UBRS Revision No._____

Wind load _0_ mph Elevation above grade _____ Exposure _____
Wind code/year _____ [ ] ASCE 7- _____ [ ] UBC_____ [ ] Other _____
Snow load _0_ psf Seismic zone _1_ Site-specific seismic information _____
Seismic code/year _____ [x] ASCE 7- _____ [ ] UBC_____ [ ] Other _____
Capacities: Operating _Flooded_ gal
Flooded _____ gal

5.2 Agitation:
Dead load _____ lb
Bending moment _____ ft-lb
Torque _____ ft-lb
Horsepower_____ hp
Impeller speed_____ RPM
Impeller diameter _____ in.
Number of impellers _____
Foot bearing: [ ] Yes [ ] No

5.3 Heating and cooling:
[ ] Electric panels
[ ] Steam coil
[ ] Steam sparger
[ ] Heat exchanger
[ ] Other _____

5.4 Mechanical and other forces:
[ ] Violent chemical reaction
[ ] Subsurface introduction of gas or vapor
[ ] Subsurface introduction of steam
[ ] Transmitted mechanical load/force
[ ] Impact due to introduction of solids
[ ] Vacuum from pump down (or vessel draining)
[ ] Vacuum from cool down
[x] Other Not applicable

5.5 Corrosion barrier excluded from structural calculations:
[x] Yes
[ ] No

5.6 Declaration of *critical service* (only by User or User's Agent; refer to para. 1-210 of ASME RTP-1):
[ ] Yes
[x] No

6. Designation of Inspector (Review paras. 1-400, 1-430, and 1-440 of ASME RTP-1. It must be recognized that ASME RTP-1 establishes numerous duties for the Inspector, which necessitates that the Inspector be present in the fabrication shop throughout a major portion of the fabrication interval.). Inspector shall be:
[x] Fabricator's Quality Control principal
[ ] User's representative
[ ] Other



Copyright ASME International
Provided by IHS under license with ASME
No reproduction or networking permitted without license from IHS
Not for Resale

## TABLE M12G-1 USER'S BASIC REQUIREMENTS SPECIFICATION (UBRS) (CONT'D) (00)
## As Required by the Provisions of ASME RTP-1



RTP Edition No._____

UBRS Revision No._____

Inspector's name _____ Telephone _____

Company _____

Address _____

_____

6.1 Approval of Inspector designation

6.1.1 Authorized User's representative:

Name _____ Title _____

Signature _____ Date _____

6.1.2 Authorized Fabricator's representative:

Name _____ Title _____

Signature _____ Date _____

Additional requirements: Requires Witness of Hydrotest form (Fig. M6-3).

Approach maximum hydrotest pressure using a manually actuated hydrotest pump, in a number of pressure steps, over a 30 min time period.

Provide a substantial physical barrier between the vessel and all personnel during hydrotest for safety reasons.

GENERAL NOTE: This form may be reproduced and used without written permission from ASME if used for purposes other than republication.



Copyright ASME International
Provided by IHS under license with ASME
No reproduction or networking permitted without license from IHS
Not for Resale

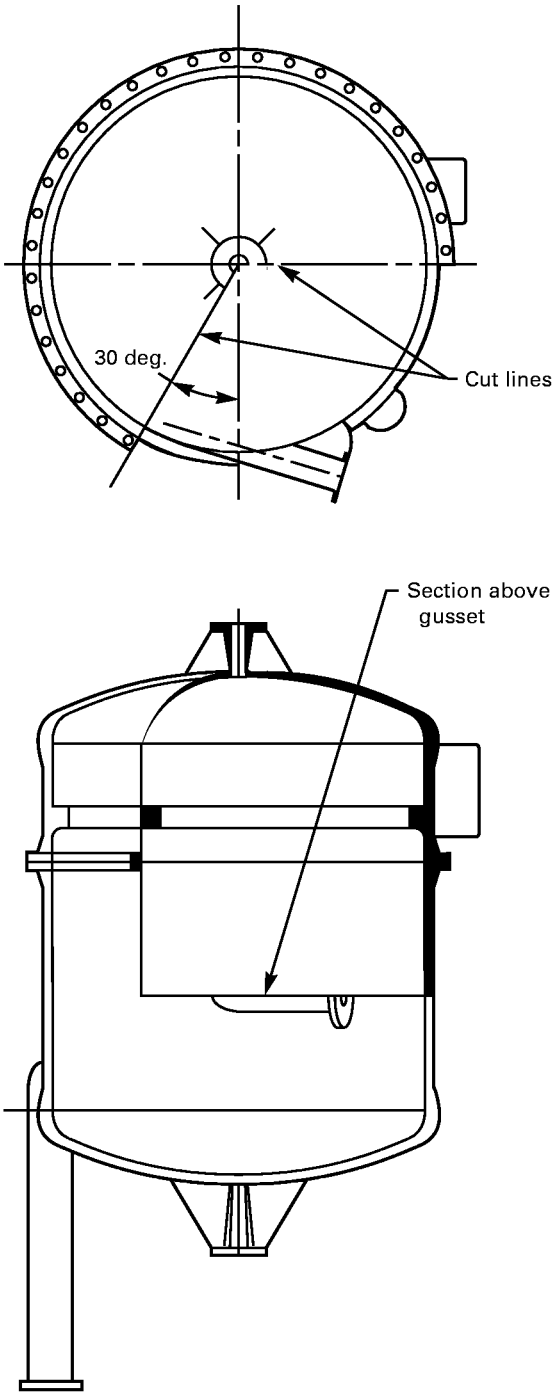


**FIG. M12G-2 POST-TEST SECTIONING OF DUAL LAMINATE DEMONSTRATION VESSEL FOR FINAL INSPECTION AND DISPLAY**



Copyright ASME International
Provided by IHS under license with ASME
No reproduction or networking permitted without license from IHS
Not for Resale

## M12H-200 RESPONSIBILITY

It is the responsibility of the Fabricator to train and qualify thermoplastic Welders. Safety is also the responsibility of the Fabricator; see para. M12D-421(l).

## M12H-300 QUALIFICATION OF WELDERS

*(a)* Welders may qualify their capabilities at the time a Fabricator qualifies for shop qualification under Article G.

*(b)* Welders must qualify their capabilities in accordance with the procedures that follow.

*(c)* It is the responsibility of the Fabricator's Quality Control Manager to:

*(1)* insure compliance with procedures as outlined for the preparation, machining, and testing of test samples;

*(2)* inspect or supervise the visual inspection of welds made for qualification;

*(3)* insure that weld samples are tested for mechanical properties in accordance with the procedures in this Standard;

*(4)* make, sign, and date a Welder Qualification Report; see Table M12H-1.

*(d)* Welders must qualify separately for each material and for each weld process. The separate weld processes are:

*(1)* hot gas welds, butt and T welds
*(2)* extrusion welds
*(3)* hot plate butt fusion welds
*(4)* flow fusion welds
*(5)* cap strip welds

### M12H-310 Making Weld Test Samples

#### M12H-311 Butt Welds

*(a)* Butt welds will be made in accordance with ASTM C 1147. In addition to the requirements of C 1147, each weld sample must contain a weld start and a weld stop.

*(b)* For hot gas welds, a V-shaped bevel will be used for all sheet thicknesses under 4 mm thick and a double V bevel will be used for all thicknesses 4 mm and greater. The Welder will be responsible for the generation of the appropriate bevels. For welding TFE, the weld rod will be PFA.

*(c)* Each weld will contain at least one stop and one start other than the beginning and end of the test weld.

**M12H-312 Cap Strip Welds.** Cap strip welds will be made over existing welds. Cap strips with or without fiber backing may be used. The crown of the "root" weld will be appropriately skived or ground off before the cap strip weld is applied.

**M12H-313 Nozzle Welds.** The Welder will prepare the nozzle and the flat or curved part representing the shell of the vessel. Two nozzles will be welded, one 2 in. in diameter and another 4 to 8 in. in diameter. Thicknesses will represent those thicknesses expected for that material. If pipe is used, the pipe wall thickness will be in the range expected to be used. Evaluation will be by visual inspection only. The nozzles will be cut in half to aid in visual inspection.

## M12H-400 EVALUATING WELD SAMPLES

*(a)* Visual inspection of all welds will be accomplished by an experienced Welder qualified in the material and weld process being evaluated. Each weld evaluator will be designated in writing by the Fabricator's Quality Control Manager. This document will contain the period during which the assignment as weld evaluator will be valid, as well as any limits on the type or kind of evaluation for each evaluator.

*(b)* The visual weld inspector will fill out the Welder Qualification Report, Table M12H-1, for all visual factors listed that are appropriate to the weld process under evaluation. See also Table M12D-1.

*(c)* Tensile tests will be accomplished on all butt welds in accordance with ASTM C 1147, except that criteria for acceptance will be as set forth in Table M12H-2. Note that each and all individual tensile test results must meet the criteria in Table M12H-2. For each qualification, there will be at least five tensile tests for welds made horizontally and at least five for welds made vertically. Results of the tensile tests will be recorded on the Welder Qualification Report; see Table M12H-1.

## M12H-500 REQUALIFICATION

Requalification must be for each particular material and each weld process. In any case, Welders must requalify at least every year. If a Welder has not made a weld using that specific material and process in the past 6 months, he or she must requalify before being allowed to make welds on linings under this Standard.



Copyright ASME International
Provided by IHS under license with ASME
No reproduction or networking permitted without license from IHS
Not for Resale

## TABLE M12H-1 WELDER QUALIFICATION REPORT

Fabricator's name _____ Address _____

_____

_____

_____

**(a) General Information**

**(1) Data by Fabricator**

Welder's name _____

Date of last qualification _____

Qualified evaluator's name _____

Quality Control Manager's name _____

Type of thermoplastic _____

Weld process _____

Date and time welds made _____

**(2) Data by Test Lab**

Test lab name _____

Tensile tester's name _____

Date and time of tensile test _____

**(b) Butt Weld Evaluation**

**(1) Visual Evaluation**

Weld rod type _____ Bevel preparation _____

Full penetration _____ Flow lines _____

Crown _____ Heat affected zone _____

Porosity _____ Stress cracks _____

Other weld defects _____

_____

**(2) Tensile Test Data**

| Horizontal Weld Strength, psi | Vertical Weld Strength, psi | Control Samples Strength, psi |
|---|---|---|
| | | |
| | | |
| | | |
| | | |
| | | |
| | | |
| Average: | | |



Copyright ASME International
Provided by IHS under license with ASME
No reproduction or networking permitted without license from IHS
Not for Resale

## TABLE M12H-1 WELDER QUALIFICATION REPORT (CONT'D)

Calculation:

$$\text{Weld factor (horizontal welds)} = \frac{\text{average strength horizontal}}{\text{average strength control}} = _____$$

$$\text{Weld factor (vertical welds)} = \frac{\text{average strength vertical}}{\text{average strength control}} = _____$$

$$\text{Weld factor (overall)} = \frac{\text{average strength all welds}}{\text{average strength control}} = _____$$

**(c) Nozzle and Cap Strip Weld Visual Evaluation**

| | | | |
|---|---|---|---|
| Weld rod type | _____ | Bevel preparation | _____ |
| Full penetration | _____ | Flow lines | _____ |
| Crown | _____ | Heat affected zone | _____ |
| Porosity | _____ | Stress cracks | _____ |
| Undercut | _____ | Other weld defects | _____ |

**(d) Certification**

By their signatures, the following certify that they have executed their responsibilities (and tests) in full accordance with all requirements in ASME RTP-1, para. M12H-300.

| | |
|---|---|
| _____ (Welder) | _____ (Date) |
| _____ (Quality Control Manager) | _____ (Date) |
| _____ (representative of testing lab) | _____ (Date) |

**(e) Qualification**

The Welder _____ is qualified

_____ is not qualified

Quality Control Manager's initials _____ Date _____

GENERAL NOTES:
(a) This form may be reproduced and used without written permission from ASME if used for purposes other than republication.
(b) Attach copies of the Tensile Test Laboratory's report.



Copyright ASME International
Provided by IHS under license with ASME
No reproduction or networking permitted without license from IHS Not for Resale

**TABLE M12H-2 WELD STRENGTH REQUIREMENTS**

| | Short Term Minimum Weld Factor | | | |
|---|---|---|---|---|
| **Thermoplastic Flow** | **Hot Gas** | **Extrusion** | **Hot Plate Butt** | **Flow Fusion** |
| PP | 0.8 | 0.8 | 0.9 | 0.9 |
| PVC | 0.8 | 0.8 | 0.9 | NA |
| CPVC | 0.7 | 0.7 | 0.8 | NA |
| PVDF | 0.85 | 0.85 | 0.9 | 0.9 |
| ECTFE | 0.9 | 0.9 | 0.9 | 0.9 |
| FEP | 0.9 | 0.9 | 0.9 | 0.9 |
| TFE (PFA filler) | 0.9 | 0.9 | NA | NA |
| MFA | 0.9 | 0.9 | 0.9 | 0.9 |
| PFA | 0.9 | 0.9 | 0.9 | 0.9 |

## ARTICLE I — GLOSSARY

*acoustic emission test:* a technique for finding flaws in materials by using transducers to detect the sound energy emitted when flaws grow under an intentionally applied stress.

*annealing:* heat treatment after processing to remove internal stresses incurred during fabrication processes.

*backing:* a fibrous component, either woven or nonwoven, embedded into a thermoplastic lining to allow a mechanical bond between the lining and the structural laminate; usually a knit woven product.

*backing strip:* a thin strip of plastic of the same material as the base plastic sheet fused to the back of fusion welds, often used to replace the fiber to assist bonding that was removed in order to accomplish the weld.

*bridging:* a weld defect in which the weld bead does not fill the prepared groove between two pieces of thermoplastic to be welded.

*butt fusion weld:* a weld accomplished by heating the two surfaces to be joined, then forcing the surfaces together to accomplish a fusion weld.

*cap strip:* a thin strip of plastic of the same material as the base plastic sheet liner that is heat welded over fusion welds. When the cap strip is applied on the backside of a weld, it contains fiber embedding to insure continuity of bonding where fiber had been intentionally removed to facilitate welding.

*climbing drum test:* a test to determine the bond strength of a lining on a structural material by using a rolling drum debonding action (ASTM D 1781).

*CPVC:* chlorinated polyvinylchloride.

*crown:* that part of a hot gas fusion weld that stands above the surfaces of the base plastic sheets.

*CTFE:* chlorotrifluoroethylene.

*dual laminate:* a two-ply laminate consisting of a chemically resistant thermoplastic liner bonded to an RTP structural laminate.

*ECTFE:* ethylene chlorotrifluoroethylene.

*environmental stress crack:* stress cracking requiring a specific environment or atmosphere in order to cause the crack to occur. See *stress crack.*

*etching:* a surface effect that results in a roughened surface from chemical reaction.

*extrusion weld:* a weld formed between two thermoplastic materials by a hot thermoplastic strip extruded into the weld joint at a temperature high enough to form a fusion bond.

*face tensile test:* a tensile test to determine the bond strength of a lining on a structural material by pulling the bond apart using only tensile forces (ISO 14130).

*FEP:* fluorinated ethylene propylene.

*flaring:* a shaping process in which the end of a cylinder is thermoformed (flared) over a pattern to form a flanged end.

*flow lines:* the melted material that flows out, forming small extrusions on both sides of the weld bead.

*fluing:* a shaping process in which a flat, or nearly flat, sheet is pierced with a round tool to generate a hole with a neck in the sheet.



Copyright ASME International
Provided by IHS under license with ASME
No reproduction or networking permitted without license from IHS
Not for Resale

*ground:* a material on the back of a weld (or any other part of a thermoplastic liner) that has sufficient electric conductivity to allow high voltage spark testing to detect flaws in the weld.

*ground strip:* a ground in the form of a strip placed against or bonded onto the back of weld bead.

*HDPE:* high density polyethylene.

*heat affected zone (HAZ):* the areas adjacent to both sides of the completed weld bead that became heated during welding and became shiny in appearance.

*hot air weld:* a fusion weld normally made by hand in which the base thermoplastic and filler rod are heated by hot air.

*hot gas weld:* a fusion weld made by hand in which the base thermoplastic and filler rod are heated by a hot gas.

*hot plate weld:* see *butt fusion weld.*

*lap shear test:* a shear test to determine the bond strength between a thermoplastic lining and the RTP structural laminate.

*MFA:* methylfluoroalkoxy fluoropolymer.

*notch:* see *undercut.*

*orange peel:* an irregularity in surface topology that visually resembles an orange peel.

*overbead:* see *crown.*

*PE:* polyethylene.

*peel strength test:* a test that peels the lining off of a dual laminate composed of a thermoplastic lining and an FRP structural laminate to determine the bond strength. Three such tests are the climbing drum test (ASTM D 1781), the peel test (BS 4994), and the floating roller peel test (ASTM D 3167).

*PFA:* Teflon® PFA or perfluoroalkoxy fluoropolymer.

*PP:* polypropylene.

*PTFE:* see *TFE.*

*purge material:* a different thermoplastic, such as PP, used to clean out remaining weld filler material from a weld tool, such as an extruder, to prevent difficulty in continuing welding after cooling the tool.

*PVC:* polyvinylchloride.

*PVDF:* polyvinylidene fluoride.

*spark test:* a high voltage test for detecting flaws in plastic by emitting a loud crack sound when a spark passes through a flaw in the plastic to the conductive ground or target.

*speed welding:* a hand fusion weld process where the filler rod is fed to the weld using hand force through a tube to the weld bead; this process is more efficient and rapid than *hand welding,* where the filler rod is held separately in one hand.

*stress crack:* an external or internal rupture in a plastic caused by tensile stresses less than its short-time mechanical strength.

*stress relief:* a heat treatment given:

*(a)* to received materials before fabrication to remove residual internal stresses incurred during thermoplastic processing steps; or

*(b)* to welded parts to remove or reduce internal stresses from fabrication steps such as welding or thermoforming.

*surface contamination:* any undesired foreign material adhering to the surfaces of material used in the fabrication of dual laminate products. Examples are lubricants and other processing aids; dirt, oil, and foreign matter from the environment; residual adhesive from protective films; solvent and any other cleaning residues; etc.

*target:* conductive material behind a weld or behind the liner itself that becomes a ground for high voltage spark testing.

*TFE:* tetrafluoroethylene; also used to indicate *PTFE,* polytetrafluoroethylene.

*thermal cycle test:* a test using ten thermal cycles to qualify the bond strength; no debonding indicates satisfactory bond strength. The temperature extremes are usually boiling water and a dry ice–acetone bath (−78°C).

*thermoforming:* a process for shaping sheet material by deforming at elevated temperature to allow shaping with low forces and less danger of cracking.

*undercut:* a groove in a weld extending below the surface of the base thermoplastic sheets and usually located at the edge of the weld bead.

*virgin material:* material (sheet, rod, or strip) that has been manufactured from new, not recycled, plastic and that has not been used earlier in any other service.



Copyright ASME International
Provided by IHS under license with ASME
No reproduction or networking permitted without license from IHS
Not for Resale

*weld bead:* the material in the weld comprised of plastic from the applied welding rod and melted plastic from the base sheet material.

*weld factor:* the average tensile strength of welded samples divided by the average tensile strength of the unwelded sheet material. The resulting number is often expressed in percent. *Short term weld factor* is a weld factor from tensile strength tests done in a short time, i.e., minutes. *Long term weld factor* is a weld factor based on tensile creep strength of weld samples compared to unwelded sheet material.

*welding:* a process for joining by using heat or other form of energy to fuse together two pieces of material.



Copyright ASME International
Provided by IHS under license with ASME
No reproduction or networking permitted without license from IHS
Not for Resale

# MANDATORY APPENDIX M-13
# BALSA WOOD RECEIVING AND INSPECTION PROCEDURES

(b)

## M13-100 INTRODUCTION

All inspections and tests specified in Appendix M-13 are to be performed by Fabricator personnel or an independent laboratory. This Appendix specifies the minimum inspections and tests that shall be performed on balsa wood that shall be used to fabricate equipment to this Standard.

## M13-200 ACCEPTANCE INSPECTION

*(a)* Acceptance inspection shall include inspection of all boxes for proper packaging and identification, and contamination. This acceptance inspection is to be conducted on unopened boxes. Acceptance requirements and limits are as defined in para. M13-410.

*(b)* The form in Table M13-1, or a similar form that contains the provisions to record the results of these required inspections, shall be used by the Fabricator.

*(c)* In addition to performing the above inspections and documentation, the Fabricator shall provide the User or User's agent with a Certificate of Compliance from the material manufacturer. The Certificate shall assure that materials were manufactured, inspected, and tested per the material supplier's specifications.

## M13-300 EQUIPMENT AND MEASURING TOOLS REQUIRED

A moisture meter as described in ASTM D 4444 is required. The meter shall be capable of reading a range of 6–18% moisture content.

## M13-400 PROCEDURES AND ACCEPTANCE LIMITS

### M13-410 Balsa Wood Identification and Package Inspection

The balsa wood shall be stored in the packaging as shipped from the balsa wood manufacturer's factory. If repackaging is required, the Fabricator shall assure that a material Certificate of Compliance traceable to the original material is provided. All other documentation shall remain unchanged. Verify and enter on the inspection record that the balsa wood as identified by the balsa wood manufacturer has the same nomenclature as the balsa wood specified to produce the laminate. Indicate acceptable balsa wood by recording the date and name of the person performing the examination on Table M13-1, column 4.

### M13-420 Visual Inspection Criteria

*(a)* As balsa wood is used during fabrication, it shall be visually inspected for imperfections and contamination. Date and name of the person performing the visual inspection shall be recorded on Table M13-1, column 6.

*(b)* The balsa wood should be uniform in thickness and show no visible sign of curling due to excessive moisture.

*(c)* Prior to bedding the balsa wood into the inner laminate layer, the moisture content shall be measured and recorded on Table M13-1, column 5. The moisture content shall also be measured prior to applying the outer laminate layers and recorded on Table M13-1, column 5.

*(d)* Measurement methods shall be as recommended by the balsa wood core manufacturer or ASTM D 4444.

*(e)* Balsa wood having any of the following defects shall not be used in laminates built to this Standard:

*(1)* wet spots

*(2)* contamination

*(3)* moisture content above 14%



Copyright ASME International
Provided by IHS under license with ASME
No reproduction or networking permitted without license from IHS

Not for Resale

## TABLE M13-1 BALSA WOOD CORE INSPECTION SHEET

Fabricator's name _____ Balsa wood manufacturer _____

Address _____ Balsa wood core type _____

_____ Balsa wood core nomenclature _____

_____ QC file no. _____

☐ Receiving inspection

☐ Point of use inspection

| 1 Package No. | 2 Balsa Wood Production Date (if Given) | 3 Lot. No. [Note (1)] | 4 Packaging Inspection | | 5 Moisture Content Inspection | | 6 Visual Inspection | | 7 Laminate Adhesion Check | | 8 Comments |
|---|---|---|---|---|---|---|---|---|---|---|---|
| | | | By | Date | By | Date | By | Date | By | Date | |
| 1 | | | | | | | | | | | |
| 2 | | | | | | | | | | | |
| 3 | | | | | | | | | | | |
| 4 | | | | | | | | | | | |
| 5 | | | | | | | | | | | |
| 6 | | | | | | | | | | | |
| 7 | | | | | | | | | | | |
| 8 | | | | | | | | | | | |
| 9 | | | | | | | | | | | |
| 10 | | | | | | | | | | | |
| 11 | | | | | | | | | | | |
| 12 | | | | | | | | | | | |
| 13 | | | | | | | | | | | |
| 14 | | | | | | | | | | | |
| 15 | | | | | | | | | | | |
| 16 | | | | | | | | | | | |
| 17 | | | | | | | | | | | |
| 18 | | | | | | | | | | | |
| 19 | | | | | | | | | | | |
| 20 | | | | | | | | | | | |

GENERAL NOTE: This form may be reproduced and used without written permission from ASME if used for purposes other than republication.

NOTE:
(1) Lot, pallet, product code, or other label identification.



Copyright ASME International
Provided by IHS under license with ASME
No reproduction or networking permitted without license from IHS
Not for Resale

# NONMANDATORY APPENDIX NM-1
# DESIGN EXAMPLES

## NM1-100 INTRODUCTION

The RTP-1 Standard provides for design by rules (Subpart 3A) and for design by stress analysis (Subpart 3B). This Appendix presents two example designs, one by Subpart 3B rules, and one by combined Subparts 3A and 3B rules. They are intended to illustrate Part 3 and are correct applications of the Standard, but are not the only designs satisfying the requirements. The examples are:

*(a)* a vertical vessel, with a torispherical top head and a toriconical lower head, made of Type I laminate and designed by combined Subparts 3A and 3B rules;

*(b)* a horizontal, saddle-supported vessel, with torispherical heads, made of Type I laminate and designed by Subpart 3B rules.

## NM1-200 EXAMPLE 1: VERTICAL VESSEL WITH A TORICONICAL LOWER HEAD

The UBRS calls for a vessel 8 ft in diameter, 15 ft from lower to upper knuckle, and with a conical lower head having a semiapex angle of 45 deg. The vessel must contain an internal pressure of 10 psi and be made of Type I laminate. The support ring will be 10 ft above the lower knuckle. The upper part of the sidewall and the top head may be designed according to Subpart 3A rules, but the lower head has a larger semiapex angle than allowed by Subpart 3A. The lower part of the sidewall and the lower head must therefore be designed by stress analysis, using Subpart 3B rules. The Fabricator has qualified Type I laminates for an ultimate tensile strength of 12,000 psi. According to para. 3B-500, the minimum allowable stress ratio is 10; thus the allowable stress is 1,200 psi.

For analysis, the vessel may be cut 8 ft above the cone–cylinder joint, because the section is out of both the discontinuity zone of the lower head-to-shell joint and the stress intensification near the support ring, and is therefore in a simple membrane stress state. The stress there has no secondary membrane and no bending stress, providing a convenient section to begin the Subpart 3B analysis. It is assumed that the sectioned edge has no axial displacement, but no other constraint, which is consistent with a membrane stress state in a cylinder. The UBRS calls for a 4 in. diameter nozzle at the apex of the cone. The rules of Part 4 may be used to design the nozzle and its attachment, so for purposes of analysis, a free edge is left at the lower end of the head. To minimize stress intensification at the head–shell juncture, a toroidal transition is used. Figure NM1-1 is a sketch of the resulting model. The numbers in small rectangles are meridional distances from the bottom of the head to the points indicated.

As a trial design, Subpart 3A rules were used to find the thickness of the sidewall

$$t = \frac{PD}{2(X/R)}$$

$$= \frac{(10)(96)}{(2)(12{,}000/10)}$$

$$= 0.40 \text{ in.}$$

and of the lower head

$$t = \frac{PD}{2(X/R)\cos\theta}$$

$$= \frac{(10)(96)}{(2)(12{,}000/10)\cos(45 \text{ deg})}$$

$$= 0.57 \text{ in.}$$

At 0.043 in. per mat ply and 0.01 in. for a veil, the thicknesses are rounded up slightly so that they correspond to an even number of plies. The head laminate is then *V*, 13*M* for a thickness of 0.57 in., and the sidewall laminate is *V*, 10*M* or 0.44 in. thick. As an initial try, the joint overlay was set equal to the thickness of the head, and extends full thickness 1.5 in. above and below the toroidal knuckle, and then tapers.



Copyright ASME International
Provided by IHS under license with ASME
No reproduction or networking permitted without license from IHS
Not for Resale

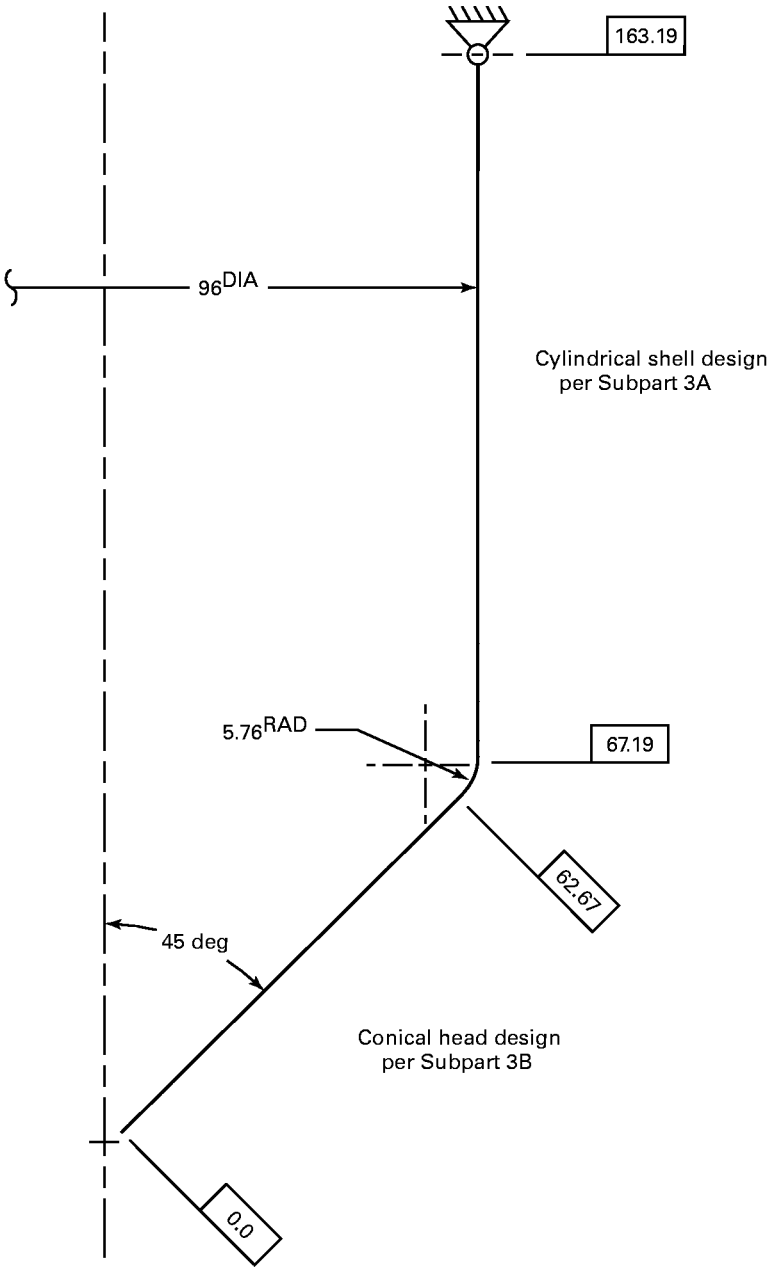


**FIG. NM1-1 TORICONICAL HEAD**

The vessel was modeled using a finite difference thin-shell computer program. The program computes the stresses required by paras. 3B-300 and 3B-400, and combines them into the longitudinal and circumferential stresses on the inside and on the outside of the vessel wall, all along a meridian. Let $\sigma_1$ represent the longitudinal normal stress on the inside surface, and $\sigma_2$ represent the circumferential normal stress. Because the vessel, loading, and support forces are axisymmetric, the shear stresses vanish. Paragraph M3-530 gives the criterion for Type I laminates:

$$R = \frac{X}{(\sigma_1^2 - \sigma_1\sigma_2 + \sigma_2^2 + 3\sigma_6^2)^{1/2}}$$

In the present case, $R = 10$, $X = 12{,}000$ psi, and $\sigma_6 = 0$. Therefore,



Copyright ASME International
Provided by IHS under license with ASME
No reproduction or networking permitted without license from IHS
Not for Resale

$$\frac{X}{R} = (\sigma_1^2 - \sigma_1\sigma_2 + \sigma_2^2)^{1/2} = \frac{12{,}000}{10} = 1{,}200 \text{ psi}$$

This is the criterion for the inside surface of the lower part of the vessel. The criterion for the outer has the same form. The term under the square root, the stress intensity, was plotted as a function of the meridional distance and compared to the allowable stress. The initial design was overstressed in the knuckle. A second design, with a joint overlay twice the thickness of the first, was tried. Figure NM1-2 is a graph of stress intensity versus meridional distance for the second design. The dashed horizontal line is at 1,200 psi, the allowable stress. The Figure shows that all stresses satisfy the criterion, and that the design conforms to the Standard. Table NM1-1 lists the thicknesses and laminations of the successful design as a function of meridional distance from the bottom of the vessel.

As the example shows, a vessel that lies outside the rules of Subpart 3A because one vessel part is not included may use Subpart 3A rules for most of the vessel and Subpart 3B for the excluded part.

## NM1-300 EXAMPLE 2: HORIZONTAL VESSEL BY SUBPART 3B RULES

The UBRS calls for a horizontal vessel with 10 ft inside diameter, 20 ft between head–shell junctures, and support saddles 2 ft in from the junctures and 18 in. wide. The heads will be torispherical, with the crown radius equal to the vessel diameter, and the knuckle radius equal to 6% of the vessel diameter. The vessel will contain liquid with a specific gravity of 1.1 with a superimposed design pressure of 15 psig. The vessel will be constructed of Type I laminate with ultimate tensile strength of 16,000 psi. The vessel will be examined using acoustic emission according to the requirements of Appendix M-8, and thus the allowable stress ratio, by para. 3B-500, is eight. Figure NM1-3 contains a sketch of the vessel.

Nomenclature used in this example is as follows.

$p$ = total pressure acting at a point on the inside surface of the vessel, positive outward, psi
$p_s$ = pressure exerted by the support saddle, positive outward, psi
$p_0$ = pressure superimposed above the hydrostatic pressure, psi
$R$ = radius to a point on the surface, in.
$R_c$ = radius of the cylindrical portion of the vessel, in.
$R_h$ = crown radius, in.
$R_k$ = knuckle radius, in.
$R_s$ = stress ratio
$S$ = stress intensity, psi
$w$ = weight of the vessel and its contents, lb
$X$ = ultimate strength, psi
$\gamma$ = specific weight of the contents, lb/in.$^3$
$\theta$ = circumferential angle, measured from the top meridian of the vessel, deg
$\sigma_z$ = normal stress in the meridional direction, psi
$\sigma_\theta$ = normal stress in the circumferential direction, psi
$\phi$ = angle between a normal to a point on the head and the vessel axis, deg
$\tau$ = shear stress in the plane of the laminate, psi

### NM1-310 Loading on the Vessel

The combined hydrostatic and design pressure at a point on the surface of the vessel is given by:

$$p = p_0 + \gamma(R_c - R\cos\theta) \quad (1)$$

See Fig. NM1-4. The radius to a point on the cylinder is simply $R_c$ and the pressure on the cylindrical vessel parts not under the support saddle is given by:

$$p = p_0 + \gamma R_c(1 - \cos\theta) \quad (2)$$

The radius to a point on the crown is

$$R = R_h \sin\phi \quad (3)$$

and to a point on the knuckle is

$$R = R_c - R_k + R_k \sin\phi = R_c - R_k(1 - \sin\phi) \quad (4)$$

Thus, the pressures on the crown and the knuckle are computed from Eqs. (5) and (6) below, respectively:

$$p = p_0 + \gamma(R_c - R_h \sin\phi\cos\theta) \quad (5)$$

$$p = p_0 + \gamma\{R_c - [R_c - R_k(1 - \sin\phi)]\cos\theta\} \quad (6)$$

The saddle supports are modeled by replacing them with the pressure they exert against their contact area on the vessel shell. It is assumed that the reaction pressure from the saddle varies as cos $\theta$ on the lower half of the shell and is zero on the upper half. It is shown in Fig. NM1-5 that for equilibrium the variation is



Copyright ASME International
Provided by IHS under license with ASME
No reproduction or networking permitted without license from IHS
Not for Resale

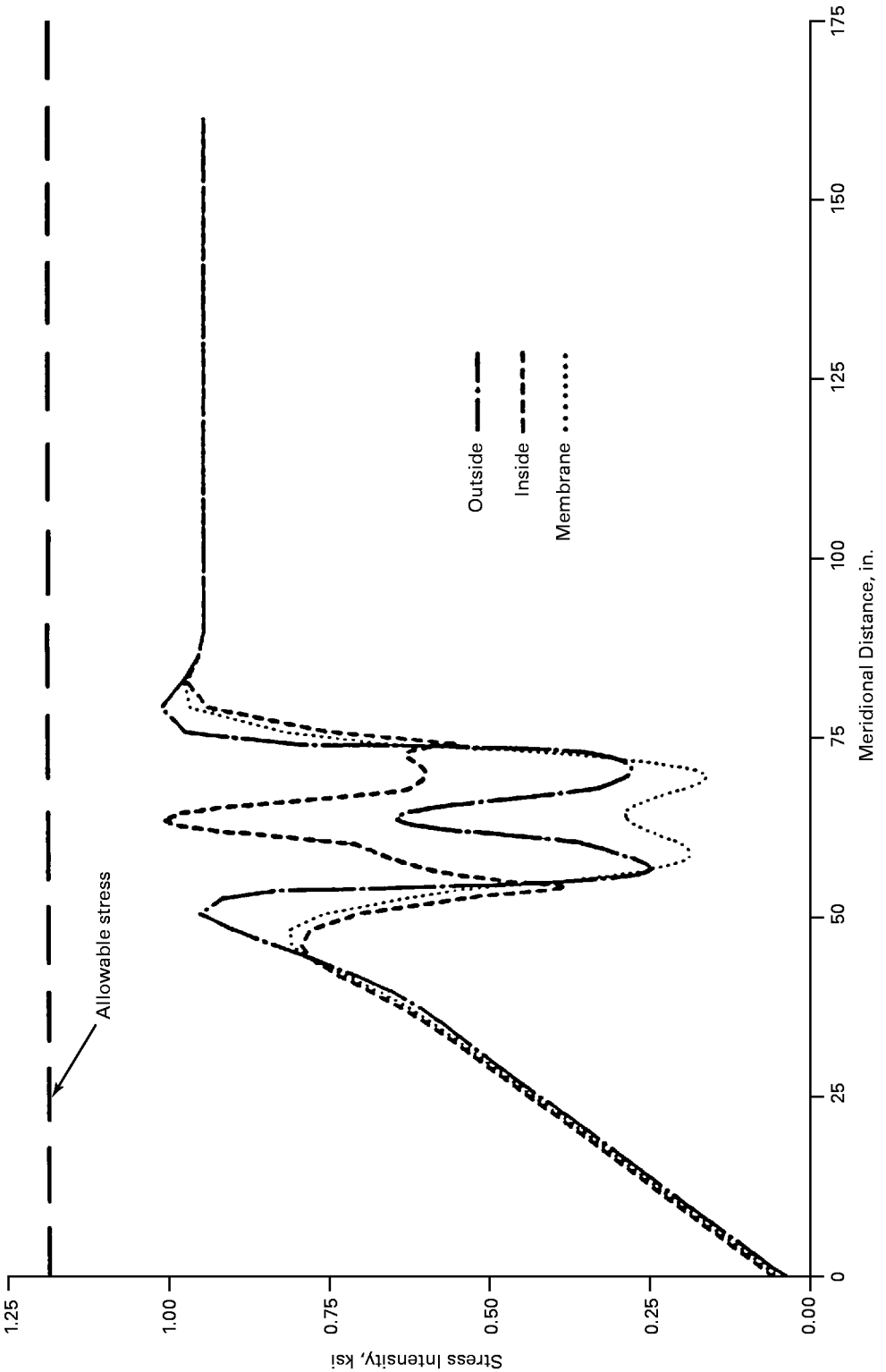


**FIG. NM1-2 STRESS INTENSITY IN A TORICONICAL HEAD**



Copyright ASME International
Provided by IHS under license with ASME
No reproduction or networking permitted without license from IHS

Not for Resale

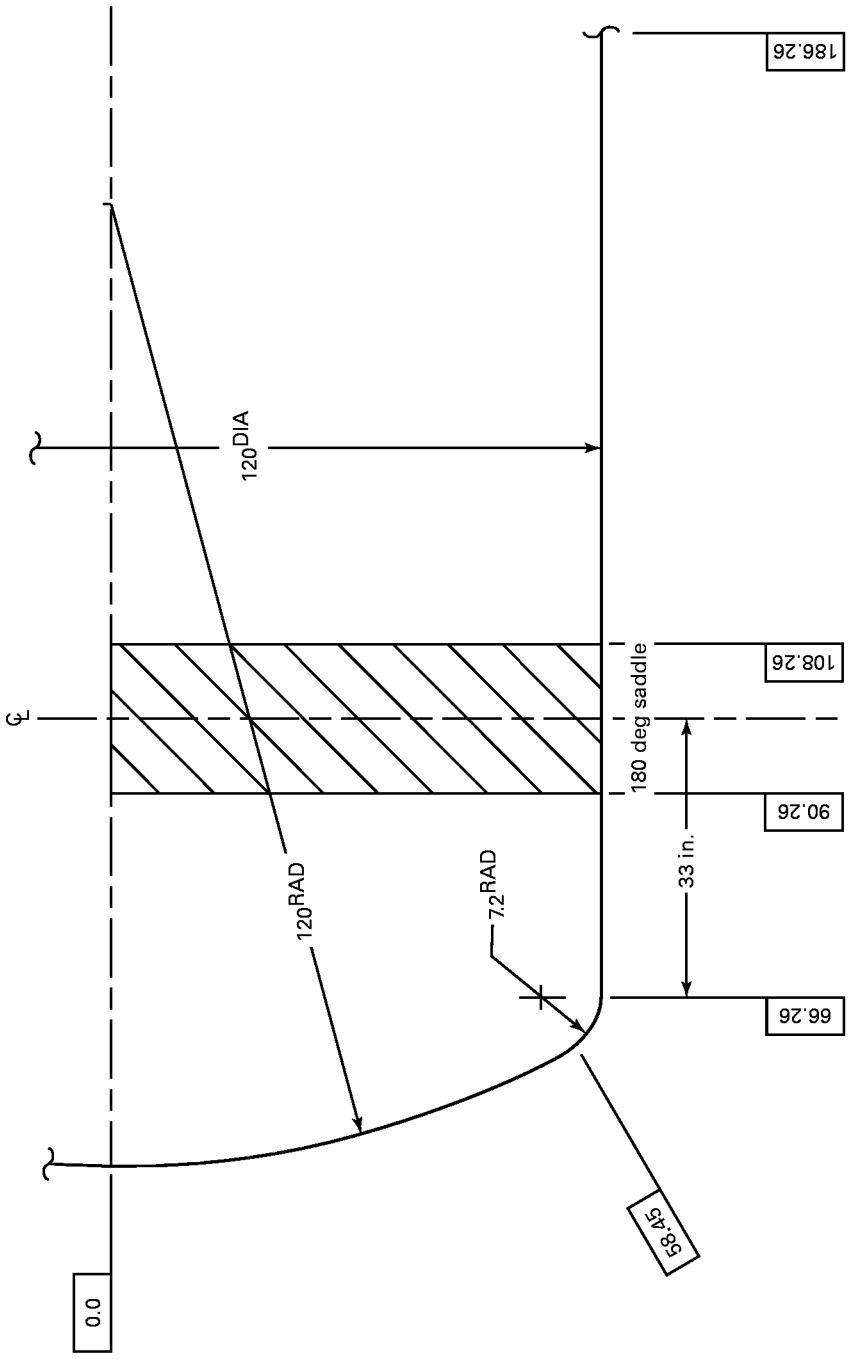


**FIG. NM1-3 HORIZONTAL TANK**



--`,,,`,,,-`-`,,`,,`,`,,`---
Copyright ASME International
Provided by IHS under license with ASME
No reproduction or networking permitted without license from IHS
Not for Resale

**TABLE NM1-1 EXAMPLE 1, VESSEL WITH A TORICONICAL LOWER HEAD**

| Meridional Coordinate | Thickness, in. | Lamination Sequence |
|---|---|---|
| 0.00 | 0.57 | *V*, 13*M* |
| 54.67 | 0.57 | *V*, 13*M* |
| 61.17 | 1.69 | *V*, 39*M* |
| 62.67 | 1.69 | *V*, 39*M* |
| 67.19 | 1.69 | *V*, 39*M* |
| 68.69 | 1.69 | *V*, 39*M* |
| 75.19 | 0.44 | *V*, 10*M* |

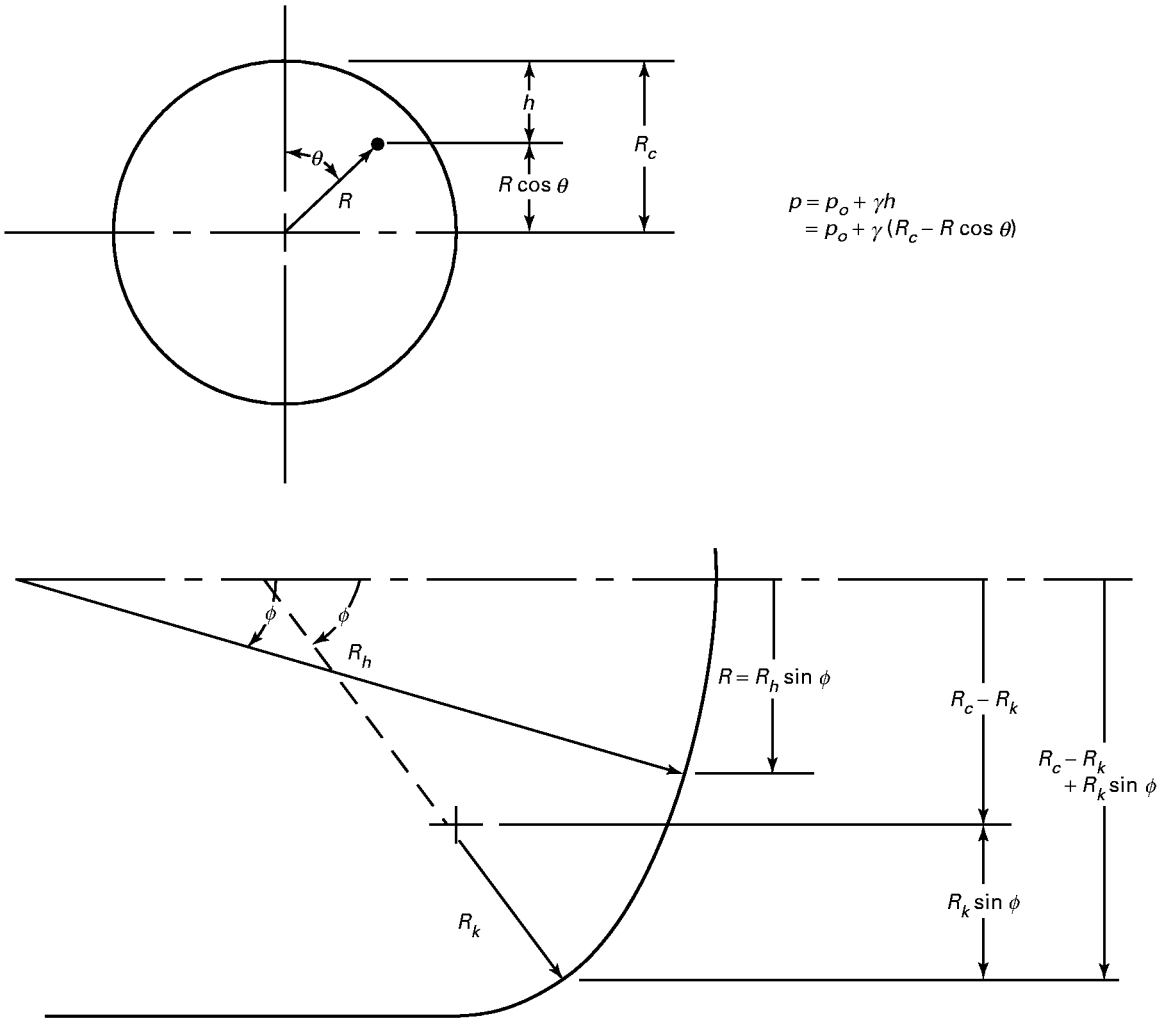


GENERAL NOTES:
(a) On the sidewall, $R = R_c$ and $p = p_o + \gamma R_c (1 - \cos \theta)$
(b) On the crown, $R = R_h \sin \phi$ and $p = p_o + \gamma (R_c - R_h \sin \phi \cos \theta)$
(c) On the knuckle, $R = R_c - R_k + R_k \sin \phi$ and $p = p_o + \gamma \{R_c - [R_c - R_k (1 - \sin \phi)] \cos \theta\}$

(00) **FIG. NM1-4 PRESSURE DISTRIBUTION**



Copyright ASME International
Provided by IHS under license with ASME
No reproduction or networking permitted without license from IHS
Not for Resale

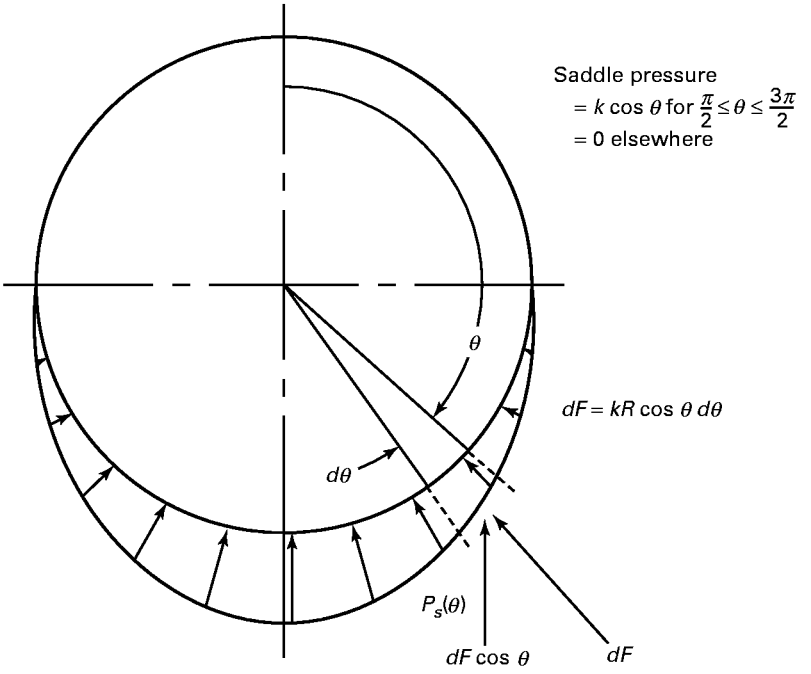


Upward reaction from the saddle is given by

$$F = L \int_{\frac{\pi}{2}}^{\frac{3\pi}{2}} dF \cos\theta = kLR \int_{\frac{\pi}{2}}^{\frac{3\pi}{2}} \cos^2\theta \; d\theta$$

$$\text{but } F = \frac{W}{2} \text{ and } \int_{\frac{\pi}{2}}^{\frac{3\pi}{2}} \cos^2\theta \, d\theta = \frac{\pi}{2}$$

$$\text{Then } \frac{W}{2} = \frac{k\pi LR}{2}$$

$$\text{and } k = \frac{W}{\pi RL};\; P_s = \frac{W}{\pi RL} \cos\theta$$

**FIG. NM1-5 SADDLE REACTION**



Copyright ASME International
Provided by IHS under license with ASME
No reproduction or networking permitted without license from IHS Not for Resale

$$p_s = \frac{w}{\pi R_c L} \cos \theta \tag{7a}$$

for 90 deg $\leq \theta \leq$ 270 deg and

$$p_s = 0 \tag{7b}$$

for $0 \leq \theta \leq$ 90 deg and 270 deg $\leq \theta \leq$ 360 deg.

Note that Eqs. (7a) and (7b) give negative values, since the saddle pressure is inward. Thus, the net pressure on the portion of the shell between 24 in. and 42 in. from the head–shell juncture is the superposition of the hydrostatic, design, and saddle reaction pressures

$$p = p_0 + \gamma R_c(1 - \cos \theta) + \frac{w}{\pi R_c L} \cos \theta \tag{8}$$

for 90 deg $\leq \theta \leq$ 270 deg.

In this example, $p_0$ = 15 psig, $\gamma$ = 0.0397 lb/in.$^3$, $R_c$ = 60 in., $R_h$ = 120 in., $R_k$ = 7.2 in., $L$ = 18 in., and $w$ = 118,906 lb. Then the pressure on the crown becomes

$$p = 17.382 - 4.764 \cos \theta \sin \phi \tag{9}$$

for $0 \leq \phi \leq$ 27.91 deg.

On the knuckle

$$p = 17.382 - 0.0397[60 - 7.2(1 - \sin \phi)] \cos \theta \tag{10}$$

for 27.91 deg $\leq \phi \leq$ 90 deg.

On the sidewall away from the saddles

$$p = 17.382 - 2.382 \cos \theta \tag{11}$$

On the shell sections above the saddles

$$p = 17.382 - 2.382 \cos \theta \tag{12a}$$

for $0 \leq \theta \leq$ 90 deg and 270 deg $\leq \theta \leq$ 360 deg, and

$$p = 17.382 + 32.663 \cos \theta \tag{12b}$$

for 90 deg $\leq \theta \leq$ 270 deg.

## NM1-320 Computer Stress Analysis

The thrust of the example is to illustrate computing the input required by any finite element or finite difference computer program, and using the stress output to determine whether the design satisfies the Standard. For this particular example, the BOSOR4 program was used, but that is incidental to the example. BOSOR4 calculates stress and deformation in axisymmetric thin-walled shell structures. Because of symmetry, only the left half of the vessel needed to be modeled.

The boundary conditions come from symmetry. Since the vessel and the loading are both symmetrical about a plane normal to the centerline of the vessel, and halfway between the tangent lines, there will be no displacement normal to the plane; i.e., the meridional displacements vanish at the plane.

## NM1-330 Design Criterion

Given the loads, boundary conditions, and the thickness distribution in Fig. NM1-3, BOSOR4 calculated the meridional, circumferential, and shear stresses on the inner and outer surfaces along a series of meridians. The design criteria in Appendix M-3 determine whether the set of stress components at a point conforms to the Standard. For Type I laminates, the criteria reduces to:

$$R_s = \frac{X}{(\sigma_\theta^2 - \sigma_\theta \sigma_z + \sigma_z^2 + 3\tau^2)^{1/2}} \tag{13}$$

Equation (13) defines an allowable stress intensity:

$$S = X/R_s = (\sigma_\theta^2 - \sigma_\theta \sigma_z + \sigma_z^2 + 3\tau^2)^{1/2} \tag{14}$$

In this case, $X$ = 16,000 psi and $R_s$ = 8. Thus, $S$ = 2,000 psi. The stresses computed by BOSOR4 were substituted into Eq. (14) and compared to the allowable intensity for a large number of points on the vessel.

The first try was with thickness computed from the formulas of Subpart 3A for a vertical vessel with a pressure equal to the pressure at the bottom of the horizontal tank, 19.76 psig. The resulting head thickness is 1.16 in. (using a design factor of 10) and the sidewall thickness is 0.65 in. It is obvious that these are too thin, especially at the saddles, but by starting too thin and increasing selected thicknesses with each iteration, one arrives at a reasonable design. The joint and knuckle reinforcement used for this trial were the standard designs.

Figures NM1-6 to NM1-10 give the stress intensity distributions along a number of vessel meridians for the initial trial. The abscissa of the graphs is the arc length along the meridian, measured from the left (center) of the left head, as shown in Fig. NM1-3. The angles follow the same convention as in the pressure



Copyright ASME International
Provided by IHS under license with ASME
No reproduction or networking permitted without license from IHS
Not for Resale

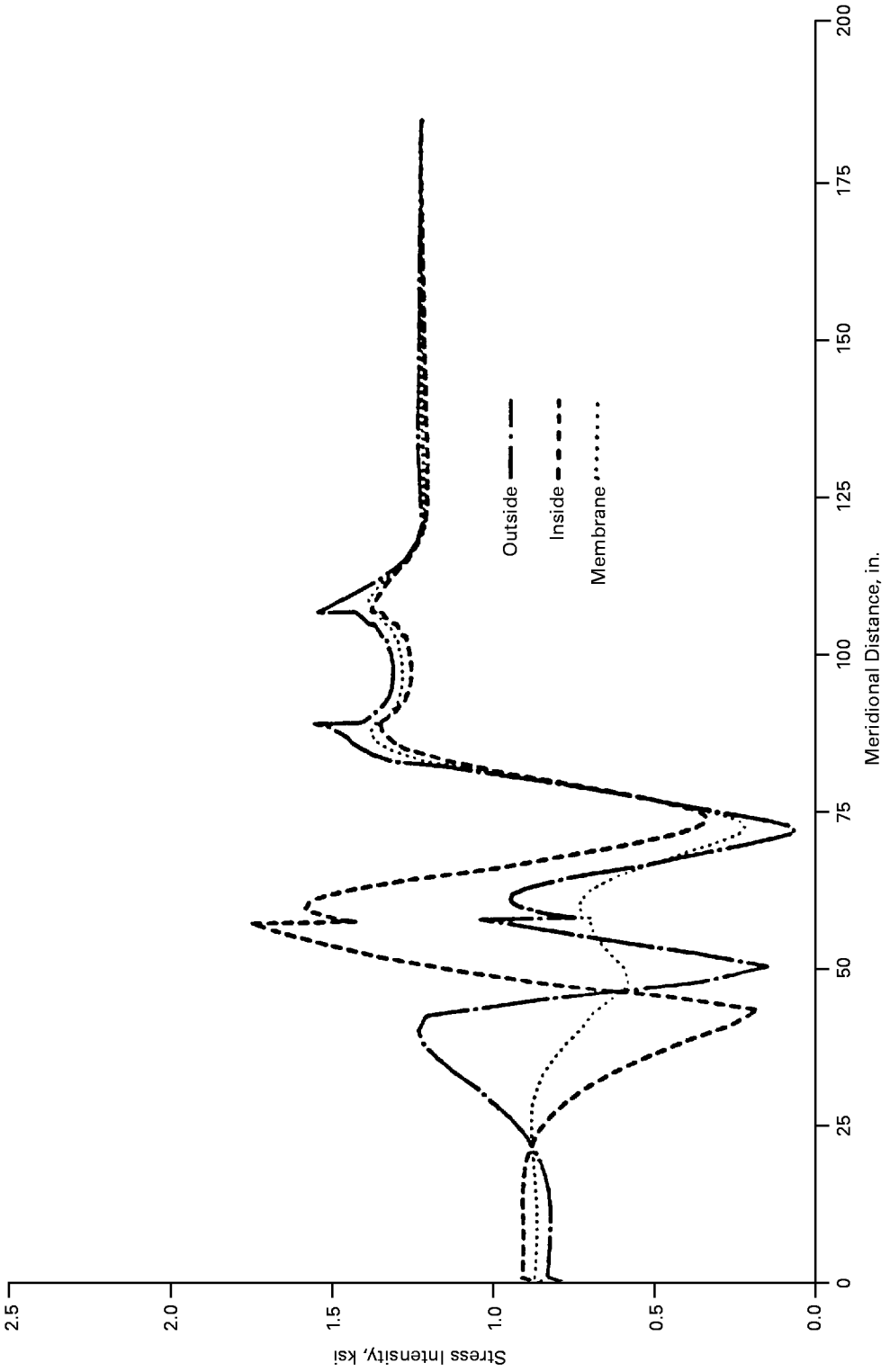


**FIG. NM1-6 STRESS ALONG TOP MERIDIAN, INITIAL TRY**



Copyright ASME International
Provided by IHS under license with ASME
No reproduction or networking permitted without license from IHS

Not for Resale

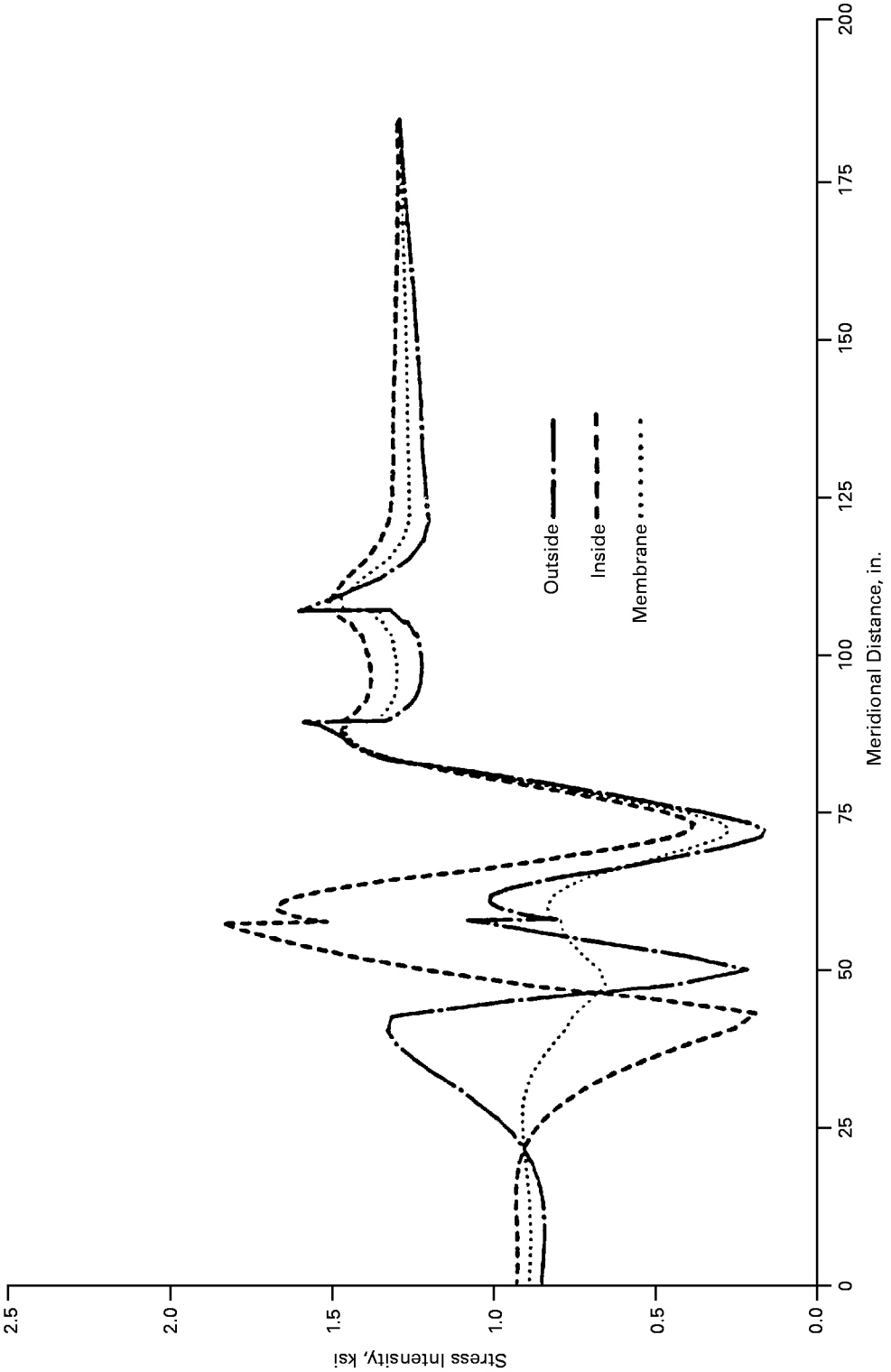


**FIG. NM1-7 STRESS ALONG 45 DEG MERIDIAN, INITIAL TRY**



Copyright ASME International
Provided by IHS under license with ASME
No reproduction or networking permitted without license from IHS

Not for Resale

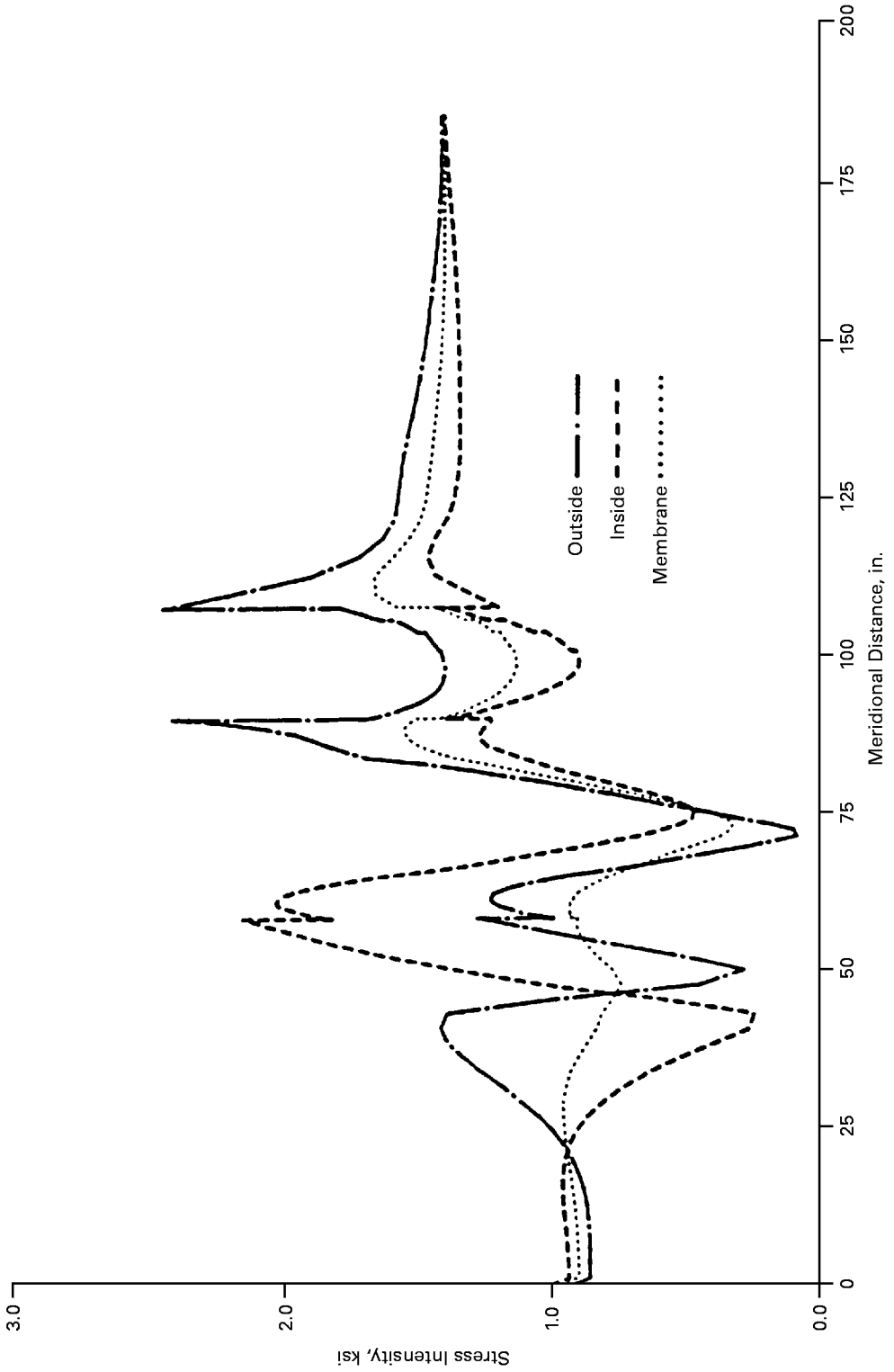


**FIG. NM1-8 STRESS ALONG 90 DEG MERIDIAN, INITIAL TRY**



Copyright ASME International
Provided by IHS under license with ASME
No reproduction or networking permitted without license from IHS

Not for Resale

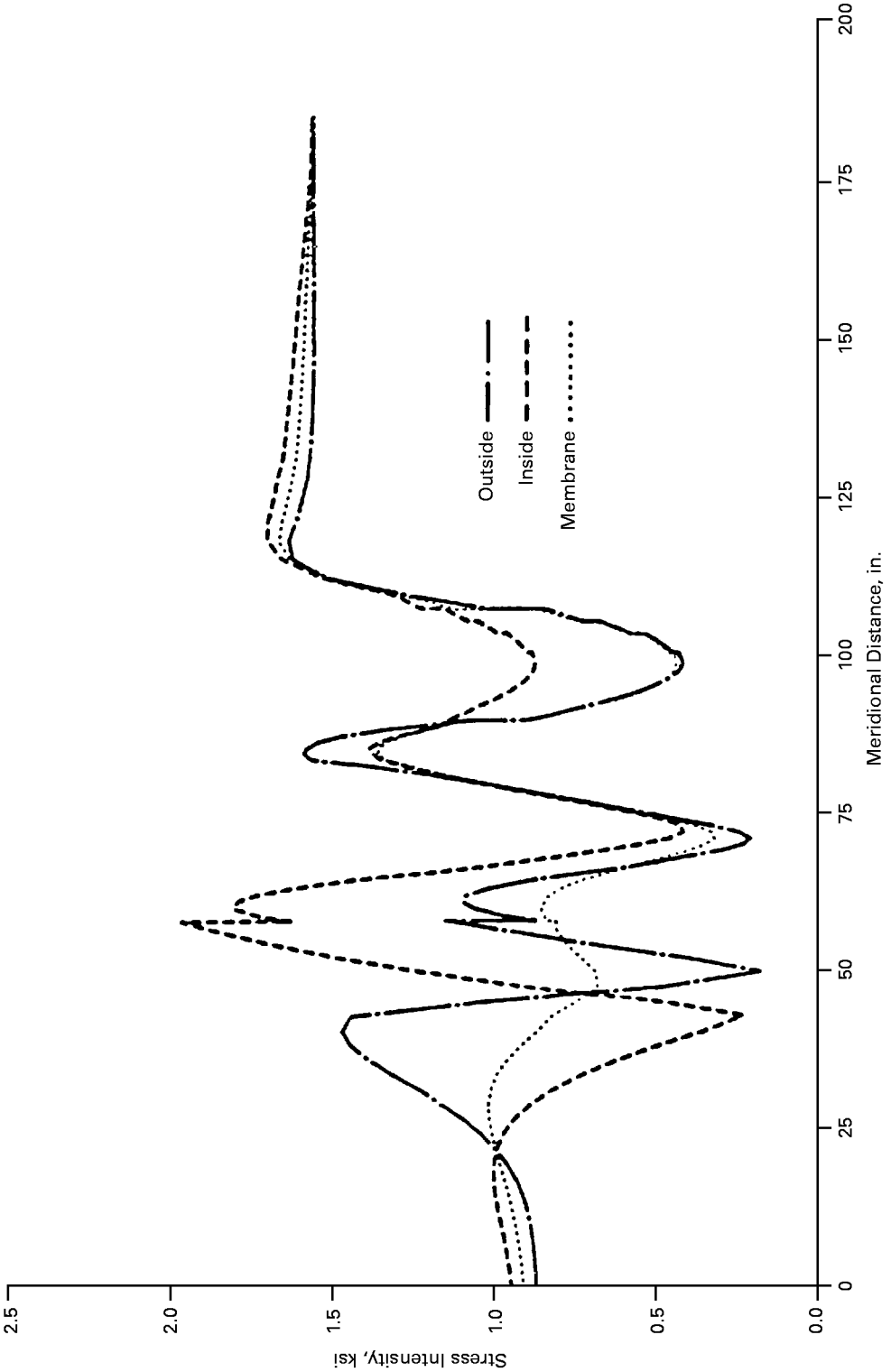


**FIG. NM1-9 STRESS ALONG 135 DEG MERIDIAN, INITIAL TRY**



Copyright ASME International
Provided by IHS under license with ASME
No reproduction or networking permitted without license from IHS

Not for Resale

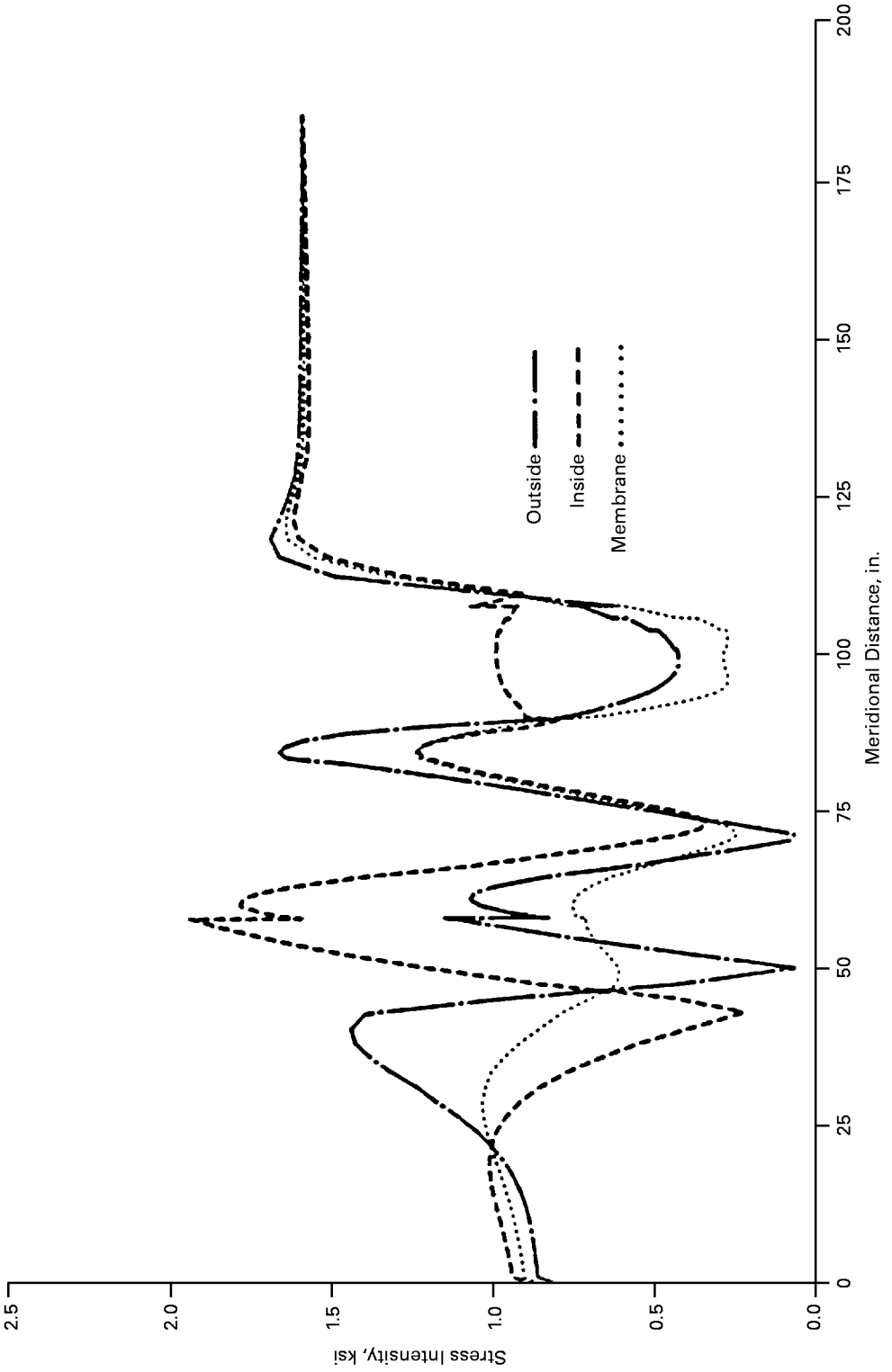


**FIG. NM1-10 STRESS ALONG BOTTOM MERIDIAN, INITIAL TRY**



Copyright ASME International
Provided by IHS under license with ASME
No reproduction or networking permitted without license from IHS

Not for Resale

distributions. The stress intensities were computed using Eq. (14). The distribution along the 90 deg meridian (Fig. NM1-8) exceeds the allowable intensity in both the knuckle and saddle regions.

After a number of iterations, the thicknesses given in Table NM1-2 were obtained. They result in the stress distributions graphed in Figs. NM1-11 to NM1-15, which show that the allowable stresses are satisfied everywhere. The maximum stress intensity is 1,900 psi and occurs in the knuckle along the 90 deg meridian. The lamination sequences do not correspond exactly to the thicknesses, because they have been rounded up to the next whole layer. They assume 0.043 in. per ply of mat and 0.01 in. for a veil ply.

**TABLE NM1-2 WALL THICKNESS IN A HORIZONTAL TANK**

| Meridional Coordinate | Thickness, in. | Lamination Sequence |
|---|---|---|
| 0.00 | 1.16 | *V*, 27*M* |
| 43.45 | 1.16 | *V*, 27*M* |
| 58.45 | 2.60 | *V*, 61*M* |
| 66.26 | 2.60 | *V*, 61*M* |
| 90.26 | 1.30 | *V*, 30*M* |
| 108.26 | 1.30 | *V*, 30*M* |
| 116.26 | 0.65 | *V*, 15*M* |
| 186.26 | 0.65 | *V*, 15*M* |



Copyright ASME International
Provided by IHS under license with ASME
No reproduction or networking permitted without license from IHS
Not for Resale

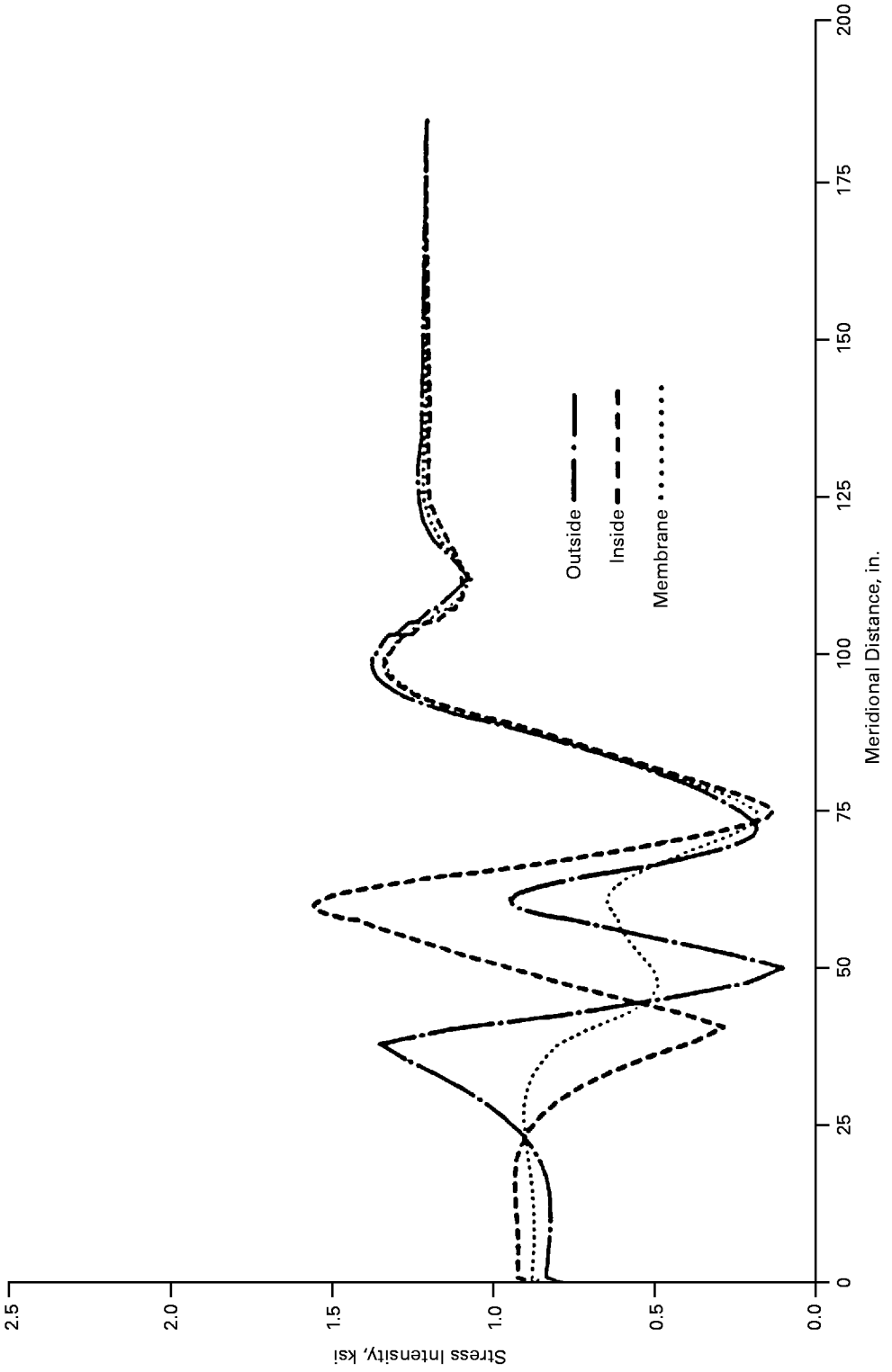


**FIG. NM1-11 STRESS ALONG TOP MERIDIAN, FINAL TRY**



Copyright ASME International
Provided by IHS under license with ASME
No reproduction or networking permitted without license from IHS

Not for Resale

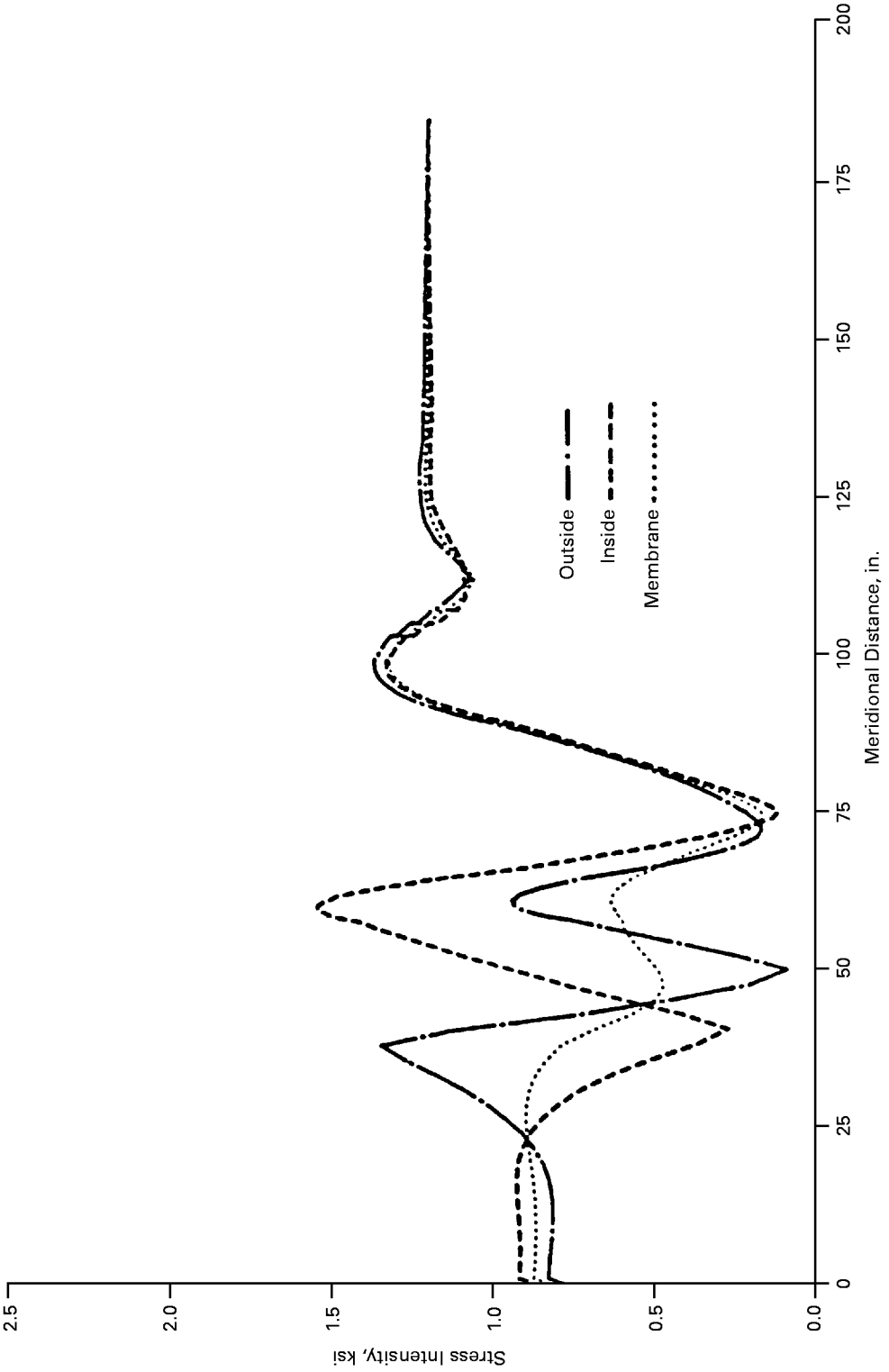


**FIG. NM1-12 STRESS ALONG 45 DEG MERIDIAN, FINAL TRY**



Copyright ASME International
Provided by IHS under license with ASME
No reproduction or networking permitted without license from IHS

Not for Resale

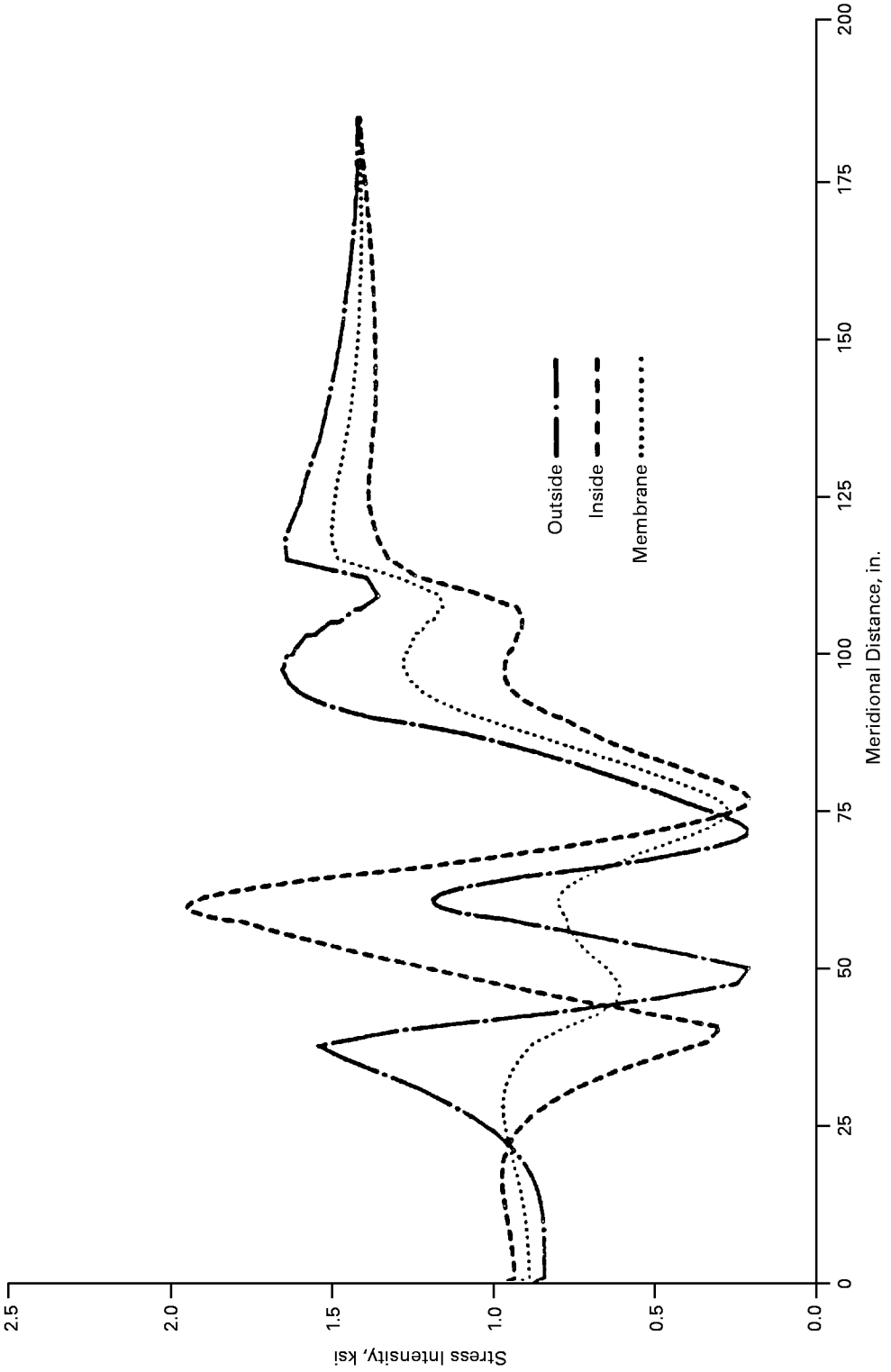


**FIG. NM1-13 STRESS ALONG 90 DEG MERIDIAN, FINAL TRY**



Copyright ASME International
Provided by IHS under license with ASME
No reproduction or networking permitted without license from IHS

Not for Resale

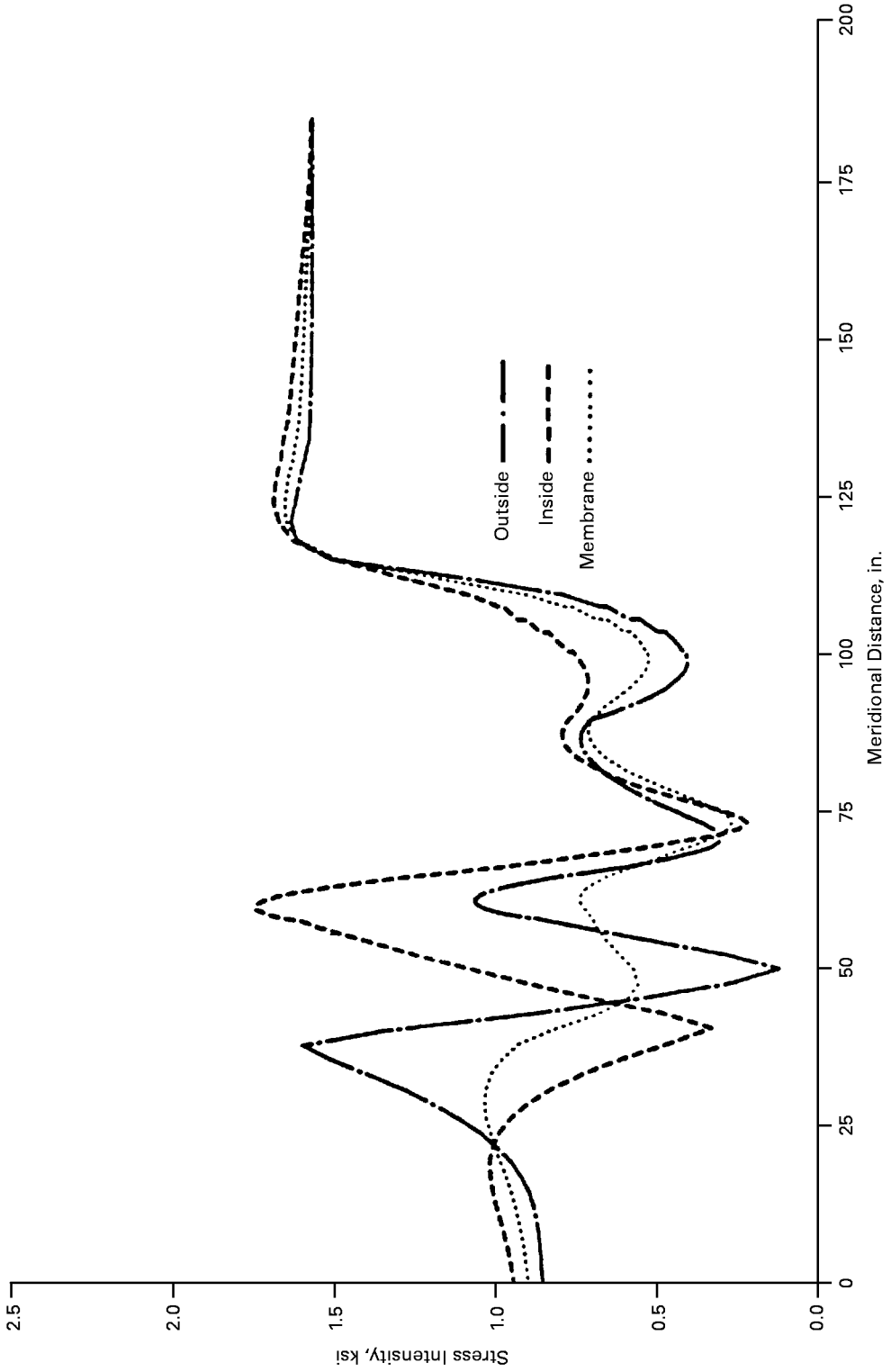


**FIG. NM1-14 STRESS ALONG 135 DEG MERIDIAN, FINAL TRY**



Copyright ASME International
Provided by IHS under license with ASME
No reproduction or networking permitted without license from IHS

Not for Resale

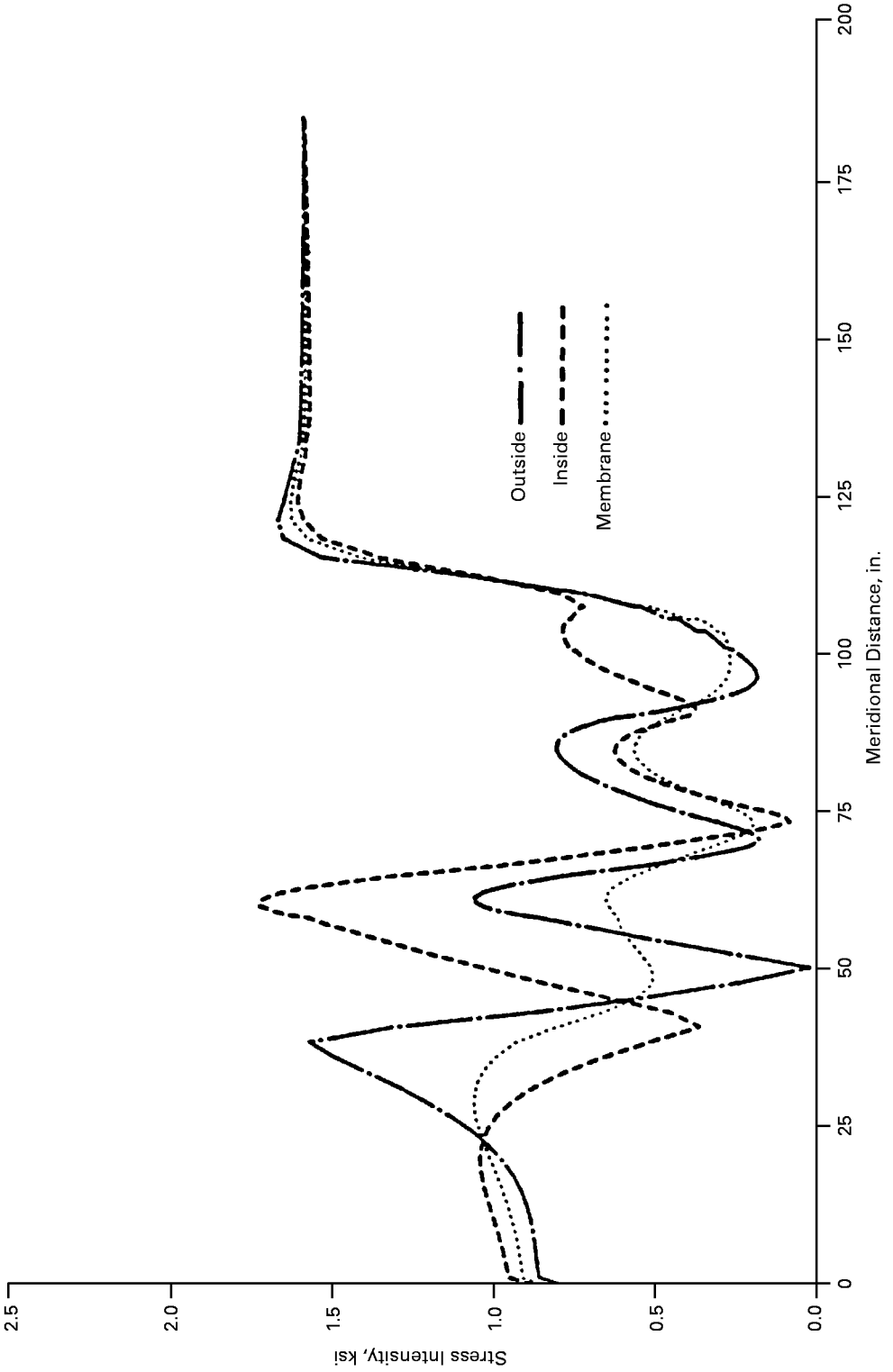


**FIG. NM1-15 STRESS ALONG BOTTOM MERIDIAN, FINAL TRY**



Copyright ASME International
Provided by IHS under license with ASME
No reproduction or networking permitted without license from IHS

Not for Resale

# NONMANDATORY APPENDIX NM-2
# DESIGN OF INTEGRAL BODY FLANGES

## NM2-100 SCOPE

This Appendix provides a procedure for the design of flat-face flanges that utilize full-face gaskets.

*(a)* For each of 14 flanges ranging in size from 24 in. to 144 in. inside diameter, a specific bolt size, number of bolts, bolt circle, and outside diameter are set forth. Each of these geometries will cover pressure up to 30 psig ± 3 psig with no change other than flange thickness and hub height. All bolt circles are sufficiently large to preclude encroachment into the hub reinforcement by back spot facing for flange bolting washers.

*(b)* For the convenience of the users of this Standard, a table is provided wherein the variables of shell thickness (thickness of hub at small end $g_0$), flange thickness, and hub reinforcement height are set forth for each of the 14 flange sizes for pressure ranges of 0 to 5 psig, 5 to 12 psig, 12 to 19 psig ± 3 psig, 19 to 24 psig ± 3 psig, and 24 to 30 psig ± 3 psig. A table covering recommended body flange bolt torque is also provided.

*(c)* A nomenclature section, design procedure guidance sheet, body flange dimension table, figures and tables covering various design factors, and a design example of a typical flange are provided.

## NM2-200 NOMENCLATURE

The following symbols are used in the formulas for the design of flat face body flanges (see Fig. NM2-1):

$A$ = outside diameter of flange, in.

$A_B$ = cross-sectional area of bolts using the root diameter of the thread or diameter of unthreaded portion, whichever is less, in.$^2$

$A_m$ = total required cross-sectional area of bolts, in.$^2$

$a$ = nominal bolt diameter, in.

$B$ = inside diameter of flange, in.

$b$ = effective gasket or joint-contact surface seating width, in.

$C$ = bolt-circle diameter, in.

$d$ = shape factor
= $(U/V)(h_0)(g_0)^2$

$d_1$ = bolt hole diameter, in.

$e$ = shape factor
= $F/h_0$

$F$ = shape factor (from Fig. NM2-3)

$f$ = hub stress correction factor (from Fig. NM2-5); for calculated values less than 1, use $f=1$

$G$ = diameter at location of gasket load reaction, in.

$g_0$ = thickness of hub at small end, in.

$g_1$ = thickness of hub at back of flange, in.
= $g_0 + t/2$

$H$ = total hydrostatic end force, lb
= $0.7854G^2P$

$H_D$ = hydrostatic end force on area inside of flange, lb

$H_G$ = gasket load, operating

$H'_{gy}$ = compression load required to seat gasket outside $G$ diameter

$H_P$ = total joint-contact-surface compression load, lb
= $2b\pi Gmp = H - H_D$

$H'_P$ = total adjusted joint-contact-surface compression for full-face gasketed flange, lb
= $(h_G/h'_G)H_P$

$H_T$ = difference between total hydrostatic end force and the hydrostatic end force area inside of flange, lb (N)
= $H - H_D$

$h$ = hub length, in.

$h_D$ = radial distance from bolt circle to the circle on which $H_D$ acts, in.

$h_G$ = bolt circle on which $H_G$ acts, in.

$h'_G$ = radial distance from bolt circle to the circle on which $H_G$ acts, in.

$h''_G$ = lever arm

$h_T$ = radial distance from bolt circle to the circle on which $H_T$ acts, in.

$h_0$ = shape factor, in.
= $(Bg_0)^{1/2}$

$K$ = ratio of outside diameter of flange to inside diameter of flange



Copyright ASME International
Provided by IHS under license with ASME
No reproduction or networking permitted without license from IHS
Not for Resale

= $A/B$
$L$ = shape factor
= $[(te + 1)/t] + t^3/d$
$M$ = unit load, operating, lb
= $M_O/B$
$M_D$ = component of moment due to $H_D$, in.-lb
= $H_D h_D$
$M_G$ = component of moment due to $H_G$ operating, in.-lb
= $H_G h''_G$
$M_O$ = total moment acting upon flange, for the operating conditions, in.-lb
$M_T$ = component of moment due to $H_T$, in.-lb
= $H_T h_T$
$m$ = gasket factor
$N_1$ = shape factor
= $\frac{4}{3}\ te + 1$
$n$ = number of bolts
$P$ = design pressure, psi
$R$ = radial distance from bolt circle to point of intersection of hub and back of flange, in.
$S_a$ = allowable bolt stress at atmospheric temperature, psi
$S_b$ = allowable bolt stress at design temperature, psi
$S_{fo}$ = allowable design stress for flange material at design temperature, psi
$S_H$ = calculated longitudinal stress in hub, psi
$S_R$ = calculated radial stress in flange, psi
$S_{RAD}$ = calculated radial stress at bolt circle due to reverse moment, psi
$S_T$ = calculated tangential stress in flange, psi
$T$ = shape factor involving $K$
$t$ = flange thickness, in.
$U$ = shape factor involving $K$
$V$ = shape factor
$W$ = average flange bolt load, lb
$Wm_1$ = required bolt load, operating conditions, lb
$Wm_2$ = required bolt load, gasket seating, lb
$Y$ = shape factor involving $K$
$y$ = gasket or joint-contact surface unit seating load, psi
$z$ = shape factor involving $K$

## NM2-300 EXAMPLE CALCULATION

Check stresses for a 72 in. full-face flange, given the following (see Fig. NM2-6):

$A$ = $78\frac{1}{2}$ in.
$B$ = 72 in.
$C$ = 77 in.
$m$ = 0.50
$P$ = 30.0 psi
$y$ = 50 psi

Assume:

$A_B$ = 8.06 in.$^2$
$d_1$ = $\frac{5}{8}$ in.
$g_0$ = $\frac{3}{4}$ in.
$h$ = $4\frac{1}{2}$ in.
$n$ = 64
$S_a$ = 25,000 psi
$S_b$ = 25,000 psi
$S_{fo}$ = 3,000 psi
$t$ = $1\frac{7}{16}$ in.

Calculate bolt, flange, and hub stresses:

$$h_G = (C - B)/4 = (77 - 72)/4 = 1.250 \text{ in.}$$

$$h'_G = (A - C)/4 = (78.5 - 77)/4 = 0.375 \text{ in.}$$

$$G = C - 2h_G = 77 - (2)(1.250) = 74.5 \text{ in.}$$

$$b = 0.25(C - B) = 0.25(77 - 72) = 1.25 \text{ in.}$$

$$H'_{gy} = (h_G/h'_G)(b\pi Gy)$$
$$= (1.25/0.375)(1.25 \times \pi \times 74.5 \times 50)$$
$$= 48{,}760 \text{ lb}$$

$$Wm_2 = b\pi Gy + H'_{gy}$$
$$= (1.25)(\pi)(74.5)(50) + 48{,}760 = 63{,}388 \text{ lb}$$

$$H_p = 2b\pi GmP = (2)(1.25)(\pi)(74.5)(0.5)(30) = 8{,}777 \text{ lb}$$

$$H'_p = H_p(h_G/h'_G) = 8{,}777(1.25/0.375) = 29{,}257 \text{ lb}$$

$$H = 0.7854G^2P = 0.7854 \times (74.5)^2 \times 30 = 130{,}775 \text{ lb}$$

$$Wm_1 = H + H_p + H'_p$$
$$= 130{,}775 + 8{,}777 + 29{,}257 = 168{,}809 \text{ lb}$$

$A_m$ equals greater of $Wm_2/S_a$ or $Wm_1/S_b$:

$$63{,}388/25{,}000 = 2.536 < 168{,}809/25{,}000 = 6.752 \text{ in.}^2$$

$$A_B = (64)\ \tfrac{1}{2} \text{ in. diameter bolts}$$
$$= (64)(0.126) = 8.064 \text{ in.}^2$$

$$W = 0.5(A_m + A_b)S_a$$
$$= (0.5)(6.752 + 8.064)(25{,}000) = 185{,}200 \text{ lb}$$



Copyright ASME International
Provided by IHS under license with ASME
No reproduction or networking permitted without license from IHS
Not for Resale

$$g_1 = (t/2) + g_0 = (1.4375/2) + 0.75 = 1.469 \text{ in.}$$

$$H_D = 0.7854B^2P = 0.7854 \times (72)^2 \times 30 = 122{,}145 \text{ lb}$$

$$H_T = H - H_D = 130{,}775 - 122{,}145 = 8{,}630 \text{ lb}$$

$$h_D = R + 0.5g_1 = 1.031 + (0.5)(1.469) = 1.766 \text{ in.}$$

$$h_T = 0.5(R + g_1 + h_G)$$
$$= 0.5(1.031 + 1.469 + 1.25) = 1.875 \text{ in.}$$

$$M_D = H_D h_D = (122{,}145)(1.766) = 215{,}647 \text{ in.-lb}$$

$$M_T = H_T h_T = (8{,}630)(1.875) = 16{,}181 \text{ in.-lb}$$

$$M_O = M_D + M_T = 215{,}647 + 16{,}181 = 231{,}828 \text{ in.-lb}$$

$$H_G = W - H = 185{,}200 - 130{,}775 = 54{,}425 \text{ lb}$$

$$h''_G = (h_G h'_G)/(h_G + h'_G)$$
$$= (1.25 \times 0.375)/(1.25 + 0.375) = 0.2885 \text{ in.}$$

$$M_G = H_G h''_G = (54{,}425)(0.2885) = 15{,}702 \text{ in.-lb}$$

$$K = A/B = 78.5/72 = 1.090$$

$$T = 1.88 \text{ (from Table NM2-2)}$$

$$Z = 11.63 \text{ (from Table NM2-2)}$$

$$Y = 22.44 \text{ (from Table NM2-2)}$$

$$U = 24.66 \text{ (from Table NM2-2)}$$

$$g_1/g_0 = 1.469/0.75 = 1.9587$$

$$h_0 = (Bg_0)^{1/2} = (72 \times 0.75)^{1/2} = 7.348$$

$$h/h_0 = 4.5/7.348 = 0.612$$

$$F = 0.808 \text{ (from Fig. NM2-3)}$$

$$V = 0.208 \text{ (from Fig. NM2-4)}$$

$$f = 1.0 \text{ (min.; from Fig. NM2-5)}$$

$$e = F/h_0 = 0.808/7.348 = 0.110$$

$$d = (U/V)h_0 g_0^2$$
$$= (24.66/0.208) \times 7.348 \times (0.750)^2 = 490.0$$

$$M = M_O/B = 231{,}828/72 = 3{,}220$$

Approximation of Required Thickness $t$

$$t = 0.29(MY/S_{fo})^{1/2}$$
$$= (0.29)(3{,}220 \times 22.44/3{,}000)^{1/2}$$
$$= 1.423 \text{ in. (use } 1.4375 \text{ in.)}$$

$$N_1 = \tfrac{4}{3}te + 1 = (1.33)(1.4375)(0.110) + 1 = 1.210$$

$$L = [(te + 1)/T] + t^3/d$$
$$= [(1.4375 \times 0.110 + 1)/1.88] + (1.4375)^3/490$$
$$= 0.622$$

Stress Calculations

*(a)* longitudinal stress in hub:

$$S_H = fM/Lg_1^2$$
$$= (1 \times 3{,}220)/[0.622 \times (1.469)^2]$$
$$= 2{,}399 \text{ psi} < 3{,}000 \text{ psi}$$

*(b)* radial stress in flange:

$$S_R = N_1 M/Lt^2$$
$$= (1.21 \times 3{,}220)/[0.622 \times (1.4375)^2]$$
$$= 3{,}031 \text{ psi} > 3{,}000 \text{ psi}$$

*(c)* tangential stress in flange:

$$S_T = YM/t^2 - ZS_R$$
$$= (22.44)(3{,}220)/(1.4375)^2 - (11.63)(3{,}031)$$
$$= -283 \text{ psi} < 3{,}000 \text{ psi}$$

*(d)* greater of $0.5(S_H + S_R)$ or $0.5(S_H + S_T)$:

$$0.5(2{,}399 + 3{,}031) = 2{,}715 \text{ psi}$$
$$> 0.5(2{,}399 + 283) = 1{,}341 \text{ psi}$$
$$2{,}715 \text{ psi} < 3{,}000 \text{ psi}$$

*(e)* radial stress at bolt circle:

$$S_{RAD} = \frac{6M_G}{t^2(\pi C - nd_1)}$$

$$= \frac{(6)(15{,}702)}{(1.4375)^2(\pi \times 77 - 64 \times 0.625)} = 225 \text{ psi}$$



Copyright ASME International
Provided by IHS under license with ASME
No reproduction or networking permitted without license from IHS
Not for Resale

**Design of Flat-Face Integral Body Flanges With Full-Face Gaskets**

| Design Conditions | | | | Bolting Calculations | | |
|---|---|---|---|---|---|---|
| Design pressure $P$ = psi | | | | Lever arms | $h_G = \frac{C-B}{4}$ = in. | $h'_G = \frac{A-C}{4}$ = in. |
| Design temperature $T$ = °F | | | | | | |
| Atmos. temperature $T$ = °F | | | | $G = C - 2h_G$ = in. | $b = 0.25(C - B)$ = in. | |
| Flange material: | | | | $H'_{gy} = (h_G/h'_G)\,(b\pi Gy)$ = lb | | |
| Bolting material: | | | | $Wm_2 = b\pi Gy + H'_{gy}$ = lb | | |
| Gasket material: | | | | $H_p = 2b\pi GmP$ = lb | | |
| Allowable Stresses | Flange | Design temp. | $S_{fo}$ = psi | $H'_p = H_p\,(h_G/h'_G)$ = lb | | |
| | Bolting | Design temp. | $S_b$ = psi | $H = 0.7854G^2P$ = lb | | |
| | | Atmos. temp. | $S_a$ = psi | $Wm_1 = H + H_p + H'_p$ = lb | | |
| Gasket Factors | | | | $A_m$ = greater of $\frac{Wm_2}{S_a}$ or $\frac{Wm_1}{S_b}$ = sq in. | | |
| $y$ = psi $m$ = | | | | $A_B$ = sq in. | | |
| | | | | $W = 0.5(A_m + A_B)S_a$ = lb | | |

| Flange Loads | Lever Arms | Flange Moments (Design Cond.) |
|---|---|---|
| $H_D = 0.7854B^2P$ = lb | $h_D = R + 0.5g_1$ = in. | $M_D = H_D h_D$ = in.-lb |
| $H_T = H - H_D$ = lb | $h_T = 0.5(R + g_1 + h_G)$ = in. | $M_T = H_T h_T$ = in.-lb |
| | | $M_O = M_D + M_T$ = in.-lb |

| Reverse moment | | | | |
|---|---|---|---|---|
| $H_G = W - H$ = lb | $h''_G = \frac{h_G h'_G}{h_G + h'_G}$ = in. | $M_G = H_G h''_G$ = in.-lb |

| Allowable Stress | Stress Calculations | Shape Constants |
|---|---|---|
| $S_{fo}$ = | Long hub $S_H = fM/Lg_1^2$ = psi | $K = A/B$ = |
| $S_{fo}$ = | Radial flg. $S_R = N_1M/Lt^2$ = psi | $T$ = $Z$ = $Y$ = $U$ = |
| $S_{fo}$ = | Tang. flg. $S_T = (YM/t^2) - ZS_R$ = psi | $g_1/g_0$ = |
| $S_{fo}$ = | Greater of $0.5(S_H + S_R)$ or $0.5(S_H + S_T)$ = psi | $h_0 = (Bg_0)^{1/2}$ = |
| | | $h/h_0$ = |
| $S_{fo}$ = | Radial stress at bolt circle $S_{RAD} = \frac{6M_G}{t^2(\pi C - nd_1)}$ = psi | $F$ = |
| | | $V$ = |
| | | $f$ = (1 min.) |
| | | $e = F/h_0$ = |
| | | $d = \frac{U}{V} h_0 g_0^2$ = |
| | | $M = M_O/B$ = |
| | | Approximation of required thickness $t = 0.29\left(\frac{MY}{S_{fo}}\right)^{1/2}$ = in. |
| | | $N_1 = \frac{4}{3}\,te + 1$ = |
| | | $L = \frac{te + 1}{T} + \frac{t^3}{d}$ = |

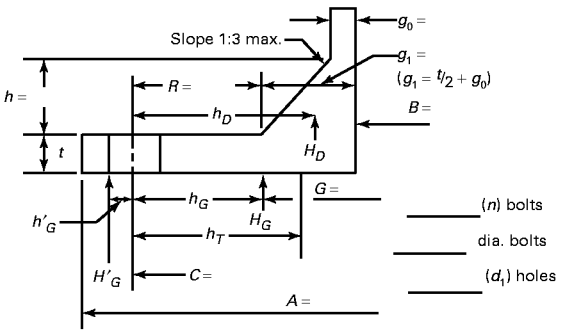


GENERAL NOTE: This form may be reproduced and used without written permission from ASME if used for purposes other than republication.

**FIG. NM2-1 DESIGN OF FLAT-FACE INTEGRAL BODY FLANGES WITH FULL-FACE GASKETS**



--`,,`,,-`-`,,`,,`,`,,`---
Copyright ASME International
Provided by IHS under license with ASME
No reproduction or networking permitted without license from IHS
Not for Resale

Copyright ASME International
Provided by IHS under license with ASME
No reproduction or networking permitted without license from IHS





## TABLE NM2-1 TYPICAL BODY FLANGE DIMENSIONS AND RECOMMENDED BOLT TORQUE VALUES FOR RTP BODY FLANGES

| *B* Minimum Inside Diameter, in. | *A* Minimum Outside Diameter, in. | *C* Bolt Circle Diameter, in. [Notes (1), (2)] | Design Pressure 5-20 psi Bolt Size, in. | Bolt Hole Diameter, in. [Note (3)] | Design Pressure 25-30 psi Bolt Size, in. | Bolt Hole Diameter, in. [Note (3)] | Number of Bolts | Torque Required, ft-lb |
|---|---|---|---|---|---|---|---|---|
| 24 | 29½ | 28 | ½ | ⅝ | ½ | ⅝ | 20 | 9 |
| 30 | 35½ | 34 | ½ | ⅝ | ½ | ⅝ | 28 | 12 |
| 36 | 41½ | 40 | ½ | ⅝ | ½ | ⅝ | 32 | 13 |
| 42 | 47½ | 46 | ½ | ⅝ | ½ | ⅝ | 40 | 14 |
| 48 | 54 | 52½ | ½ | ⅝ | ½ | ⅝ | 44 | 16 |
| 54 | 60 | 58½ | ½ | ⅝ | ½ | ⅝ | 48 | 18 |
| 60 | 66 | 64½ | ½ | ⅝ | ½ | ⅝ | 52 | 18 |
| 72 | 78½ | 77 | ½ | ⅝ | ⅝ | ¾ | 64 | 21 |
| 84 | 91 | 89½ | ½ | ⅝ | ⅝ | ¾ | 76 | 25 |
| 96 | 104½ | 102½ | ⅝ | ¾ | ¾ | ⅞ | 84 | 35 |
| 108 | 117 | 115 | ⅝ | ¾ | ¾ | ⅞ | 96 | 39 |
| 120 | 129½ | 127½ | ⅝ | ¾ | ¾ | ⅞ | 104 | 45 |
| 132 | 142 | 140 | ⅝ | ¾ | ¾ | ⅞ | 116 | 46 |
| 144 | 155 | 152½ | ¾ | ¾ | ⅞ | 1 | 120 | 62 |

GENERAL NOTES:
(a) The above torque values were calculated using well lubricated low alloy carbon steel bolts.
(b) For flanges having surface irregularities and requiring higher torque values to effect sealing, torques can be increased to 25 ft-lb for ½ in. diameter bolts, 50 ft-lb for ⅝ in. diameter bolts, and 83 ft-lb for ¾ in. diameter bolts without incurring flange damage.
(c) Lower torques can be used for lower pressure applications.
(d) These dimensions were used in designing the flanges shown in Table NM2-3. Alternate flange geometries can be considered using the design method illustrated in this Appendix.

NOTES:
(1) ± 0.06 in. (ASME B16.5).
(2) ± 0.06 in. eccentricity between bolt circle and center of shell.
(3) ± 0.03 in. center to center of adjacent bolt holes (ASME B16.5).



Not for Resale

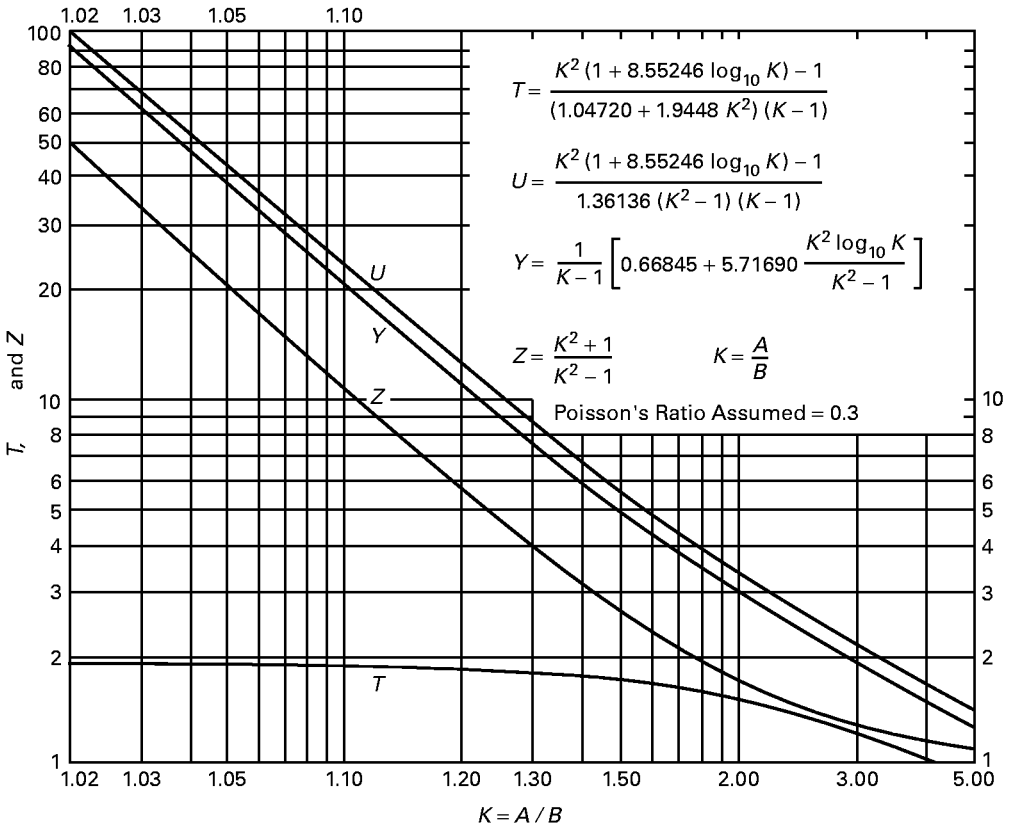


**FIG. NM2-2 VALUES OF *T, U, Y,* AND *Z* (Terms Involving *K*)**



Copyright ASME International
Provided by IHS under license with ASME
No reproduction or networking permitted without license from IHS Not for Resale

## TABLE NM2-2 VALUES OF *T, Z, Y,* AND *U* (Factors Involving *K*)

| *K* | *T* | *Z* | *Y* | *U* | *K* | *T* | *Z* | *Y* | *U* | *K* | *T* | *Z* | *Y* | *U* |
|---|---|---|---|---|---|---|---|---|---|---|---|---|---|---|
| 1.001 | 1.91 | 1000.50 | 1899.43 | 2078.85 | 1.051 | 1.89 | 20.12 | 38.68 | 42.51 | 1.101 | 1.88 | 10.43 | 20.15 | 22.12 |
| 1.002 | 1.91 | 500.50 | 951.81 | 1052.80 | 1.052 | 1.89 | 19.74 | 37.96 | 41.73 | 1.102 | 1.88 | 10.33 | 19.94 | 21.92 |
| 1.003 | 1.91 | 333.83 | 637.56 | 700.70 | 1.053 | 1.89 | 19.38 | 37.27 | 40.96 | 1.103 | 1.88 | 10.23 | 19.76 | 21.72 |
| 1.004 | 1.91 | 250.50 | 478.04 | 525.45 | 1.054 | 1.89 | 19.03 | 36.60 | 40.23 | 1.104 | 1.88 | 10.14 | 19.58 | 21.52 |
| 1.005 | 1.91 | 200.50 | 383.67 | 421.72 | 1.055 | 1.89 | 18.69 | 35.96 | 39.64 | 1.105 | 1.88 | 10.05 | 19.38 | 21.30 |
| 1.006 | 1.91 | 167.17 | 319.71 | 351.42 | 1.056 | 1.89 | 18.38 | 35.34 | 38.84 | 1.106 | 1.88 | 9.96 | 19.33 | 21.14 |
| 1.007 | 1.91 | 143.36 | 274.11 | 301.30 | 1.057 | 1.89 | 18.06 | 34.74 | 38.19 | 1.107 | 1.87 | 9.87 | 19.07 | 20.95 |
| 1.008 | 1.91 | 125.50 | 239.95 | 263.75 | 1.058 | 1.89 | 17.76 | 34.17 | 37.56 | 1.108 | 1.87 | 9.78 | 18.90 | 20.77 |
| 1.009 | 1.91 | 111.61 | 213.42 | 234.42 | 1.059 | 1.89 | 17.47 | 33.62 | 36.95 | 1.109 | 1.87 | 9.70 | 18.74 | 20.59 |
| 1.010 | 1.91 | 100.50 | 192.19 | 211.19 | 1.060 | 1.89 | 17.18 | 33.04 | 36.34 | 1.110 | 1.87 | 9.62 | 18.55 | 20.38 |
| 1.011 | 1.91 | 91.41 | 174.83 | 192.13 | 1.061 | 1.89 | 16.91 | 32.55 | 35.78 | 1.111 | 1.87 | 9.54 | 18.42 | 20.25 |
| 1.012 | 1.91 | 83.84 | 160.38 | 176.25 | 1.062 | 1.89 | 16.64 | 32.04 | 35.21 | 1.112 | 1.87 | 9.46 | 18.27 | 20.08 |
| 1.013 | 1.91 | 77.43 | 148.06 | 162.81 | 1.063 | 1.89 | 16.40 | 31.55 | 34.68 | 1.113 | 1.87 | 9.38 | 18.13 | 19.91 |
| 1.014 | 1.91 | 71.93 | 137.69 | 151.30 | 1.064 | 1.89 | 16.15 | 31.08 | 34.17 | 1.114 | 1.87 | 9.30 | 17.97 | 19.75 |
| 1.015 | 1.91 | 67.17 | 128.61 | 141.33 | 1.065 | 1.89 | 15.90 | 30.61 | 33.65 | 1.115 | 1.87 | 9.22 | 17.81 | 19.55 |
| 1.016 | 1.90 | 63.00 | 120.56 | 132.49 | 1.066 | 1.89 | 15.67 | 30.17 | 33.17 | 1.116 | 1.87 | 9.15 | 17.68 | 19.43 |
| 1.017 | 1.90 | 59.33 | 111.98 | 124.81 | 1.067 | 1.89 | 15.45 | 29.74 | 32.69 | 1.117 | 1.87 | 9.07 | 17.54 | 19.27 |
| 1.018 | 1.90 | 56.06 | 107.36 | 118.00 | 1.068 | 1.89 | 15.22 | 29.32 | 32.22 | 1.118 | 1.87 | 9.00 | 17.40 | 19.12 |
| 1.019 | 1.90 | 53.14 | 101.72 | 111.78 | 1.069 | 1.89 | 15.02 | 28.91 | 31.79 | 1.119 | 1.87 | 8.94 | 17.27 | 18.98 |
| 1.020 | 1.90 | 50.51 | 96.73 | 106.30 | 1.070 | 1.89 | 14.80 | 28.51 | 31.34 | 1.120 | 1.87 | 8.86 | 17.13 | 18.80 |
| 1.021 | 1.90 | 48.12 | 92.21 | 101.33 | 1.071 | 1.89 | 14.61 | 28.13 | 30.92 | 1.121 | 1.87 | 8.79 | 17.00 | 18.68 |
| 1.022 | 1.90 | 45.96 | 88.04 | 96.75 | 1.072 | 1.89 | 14.41 | 27.76 | 30.51 | 1.122 | 1.87 | 8.72 | 16.87 | 18.54 |
| 1.023 | 1.90 | 43.98 | 84.30 | 92.64 | 1.073 | 1.89 | 14.22 | 27.39 | 30.11 | 1.123 | 1.87 | 8.66 | 16.74 | 18.40 |
| 1.024 | 1.90 | 42.17 | 80.81 | 88.81 | 1.074 | 1.88 | 14.04 | 27.04 | 29.72 | 1.124 | 1.87 | 8.59 | 16.62 | 18.26 |
| 1.025 | 1.90 | 40.51 | 77.61 | 85.29 | 1.075 | 1.88 | 13.85 | 26.69 | 29.34 | 1.125 | 1.87 | 8.53 | 16.49 | 18.11 |
| 1.026 | 1.90 | 38.97 | 74.70 | 82.09 | 1.076 | 1.88 | 13.68 | 26.36 | 28.98 | 1.126 | 1.87 | 8.47 | 16.37 | 17.99 |
| 1.027 | 1.90 | 37.54 | 71.97 | 79.08 | 1.077 | 1.88 | 13.56 | 26.03 | 28.69 | 1.127 | 1.87 | 8.40 | 16.25 | 17.86 |
| 1.028 | 1.90 | 36.22 | 69.43 | 76.30 | 1.078 | 1.88 | 13.35 | 25.72 | 28.27 | 1.128 | 1.87 | 8.34 | 16.14 | 17.73 |
| 1.029 | 1.90 | 34.99 | 67.11 | 73.75 | 1.079 | 1.88 | 13.18 | 25.40 | 27.92 | 1.129 | 1.87 | 8.28 | 16.02 | 17.60 |
| 1.030 | 1.90 | 33.84 | 64.91 | 71.33 | 1.080 | 1.88 | 13.02 | 25.10 | 27.59 | 1.130 | 1.87 | 8.22 | 15.91 | 17.48 |
| 1.031 | 1.90 | 32.76 | 62.85 | 69.06 | 1.081 | 1.88 | 12.87 | 24.81 | 27.27 | 1.131 | 1.87 | 8.16 | 15.79 | 17.35 |
| 1.032 | 1.90 | 31.76 | 60.92 | 66.94 | 1.082 | 1.88 | 12.72 | 24.52 | 26.95 | 1.132 | 1.87 | 8.11 | 15.68 | 17.24 |
| 1.033 | 1.90 | 30.81 | 59.11 | 63.95 | 1.083 | 1.88 | 12.57 | 24.24 | 26.65 | 1.133 | 1.86 | 8.05 | 15.57 | 17.11 |
| 1.034 | 1.90 | 29.92 | 57.41 | 63.08 | 1.084 | 1.88 | 12.43 | 24.00 | 26.34 | 1.134 | 1.86 | 7.99 | 15.46 | 16.99 |
| 1.035 | 1.90 | 29.08 | 55.80 | 61.32 | 1.085 | 1.88 | 12.29 | 23.69 | 26.05 | 1.135 | 1.86 | 7.94 | 15.36 | 16.90 |
| 1.036 | 1.90 | 28.29 | 54.29 | 59.66 | 1.086 | 1.88 | 12.15 | 23.44 | 25.57 | 1.136 | 1.86 | 7.88 | 15.26 | 16.77 |
| 1.037 | 1.90 | 27.54 | 52.85 | 58.08 | 1.087 | 1.88 | 12.02 | 23.18 | 25.48 | 1.137 | 1.86 | 7.83 | 15.15 | 16.66 |
| 1.038 | 1.90 | 26.83 | 51.50 | 56.59 | 1.088 | 1.88 | 11.89 | 22.93 | 25.20 | 1.138 | 1.86 | 7.78 | 15.05 | 16.54 |
| 1.039 | 1.90 | 26.15 | 50.21 | 55.17 | 1.089 | 1.88 | 11.76 | 22.68 | 24.93 | 1.139 | 1.86 | 7.73 | 14.95 | 16.43 |
| 1.040 | 1.90 | 25.51 | 48.97 | 53.82 | 1.090 | 1.88 | 11.63 | 22.44 | 24.66 | 1.140 | 1.86 | 7.68 | 14.86 | 16.35 |
| 1.041 | 1.90 | 24.90 | 47.81 | 53.10 | 1.091 | 1.88 | 11.52 | 22.22 | 24.41 | 1.141 | 1.86 | 7.62 | 14.76 | 16.22 |
| 1.042 | 1.90 | 24.32 | 46.71 | 51.33 | 1.092 | 1.88 | 11.40 | 21.99 | 24.16 | 1.142 | 1.86 | 7.57 | 14.66 | 16.11 |
| 1.043 | 1.90 | 23.77 | 45.64 | 50.15 | 1.093 | 1.88 | 11.28 | 21.76 | 23.91 | 1.143 | 1.86 | 7.53 | 14.57 | 16.01 |
| 1.044 | 1.90 | 23.23 | 44.64 | 49.05 | 1.094 | 1.88 | 11.16 | 21.54 | 23.67 | 1.144 | 1.86 | 7.48 | 14.48 | 15.91 |
| 1.045 | 1.90 | 22.74 | 43.69 | 48.02 | 1.095 | 1.88 | 11.05 | 21.32 | 23.44 | 1.145 | 1.86 | 7.43 | 14.39 | 15.83 |
| 1.046 | 1.90 | 22.05 | 42.75 | 46.99 | 1.096 | 1.88 | 10.94 | 21.11 | 23.20 | 1.146 | 1.86 | 7.38 | 14.29 | 15.71 |
| 1.047 | 1.90 | 21.79 | 41.87 | 46.03 | 1.097 | 1.88 | 10.83 | 20.91 | 22.97 | 1.147 | 1.86 | 7.34 | 14.20 | 15.61 |
| 1.048 | 1.90 | 21.35 | 41.02 | 45.09 | 1.098 | 1.88 | 10.73 | 20.71 | 22.75 | 1.148 | 1.86 | 7.29 | 14.12 | 15.51 |
| 1.049 | 1.90 | 20.92 | 40.21 | 44.21 | 1.099 | 1.88 | 10.62 | 20.51 | 22.39 | 1.149 | 1.86 | 7.25 | 14.03 | 15.42 |
| 1.050 | 1.89 | 20.51 | 39.43 | 43.34 | 1.100 | 1.88 | 10.52 | 20.31 | 22.18 | 1.150 | 1.86 | 7.20 | 13.95 | 15.34 |

*(continued)*



Copyright ASME International
Provided by IHS under license with ASME
No reproduction or networking permitted without license from IHS
Not for Resale

**TABLE NM2-2 VALUES OF *T, Z, Y,* AND *U* (Factors Involving *K*) (CONT'D)**

| *K* | *T* | *Z* | *Y* | *U* | *K* | *T* | *Z* | *Y* | *U* | *K* | *T* | *Z* | *Y* | *U* |
|---|---|---|---|---|---|---|---|---|---|---|---|---|---|---|
| 1.151 | 1.86 | 7.16 | 13.86 | 15.23 | 1.201 | 1.84 | 5.52 | 10.70 | 11.76 | 1.251 | 1.82 | 4.54 | 8.80 | 9.67 |
| 1.152 | 1.86 | 7.11 | 13.77 | 15.14 | 1.202 | 1.84 | 5.50 | 10.65 | 11.71 | 1.252 | 1.82 | 4.52 | 8.77 | 9.64 |
| 1.153 | 1.86 | 7.07 | 13.69 | 15.05 | 1.203 | 1.84 | 5.47 | 10.61 | 11.66 | 1.253 | 1.82 | 4.51 | 8.74 | 9.60 |
| 1.154 | 1.86 | 7.03 | 13.61 | 14.96 | 1.204 | 1.84 | 5.45 | 10.56 | 11.61 | 1.254 | 1.82 | 4.49 | 8.71 | 9.57 |
| 1.155 | 1.86 | 6.99 | 13.54 | 14.87 | 1.205 | 1.84 | 5.42 | 10.52 | 11.56 | 1.255 | 1.82 | 4.48 | 8.68 | 9.54 |
| 1.156 | 1.86 | 6.95 | 13.45 | 14.78 | 1.206 | 1.84 | 5.40 | 10.47 | 11.51 | 1.256 | 1.82 | 4.46 | 8.65 | 9.51 |
| 1.157 | 1.86 | 6.91 | 13.37 | 14.70 | 1.207 | 1.84 | 5.38 | 10.43 | 11.46 | 1.257 | 1.82 | 4.45 | 8.62 | 9.47 |
| 1.158 | 1.86 | 6.87 | 13.30 | 14.61 | 1.208 | 1.84 | 5.35 | 10.38 | 11.41 | 1.258 | 1.81 | 4.43 | 8.59 | 9.44 |
| 1.159 | 1.86 | 6.83 | 13.22 | 14.53 | 1.209 | 1.84 | 5.33 | 10.34 | 11.36 | 1.259 | 1.81 | 4.42 | 8.56 | 9.41 |
| 1.160 | 1.86 | 6.79 | 13.15 | 14.45 | 1.210 | 1.84 | 5.31 | 10.30 | 11.32 | 1.260 | 1.81 | 4.40 | 8.53 | 9.38 |
| 1.161 | 1.85 | 6.75 | 13.07 | 14.36 | 1.211 | 1.83 | 5.29 | 10.25 | 11.27 | 1.261 | 1.81 | 4.39 | 8.51 | 9.35 |
| 1.162 | 1.85 | 6.71 | 13.00 | 14.28 | 1.212 | 1.83 | 5.27 | 10.21 | 11.22 | 1.262 | 1.81 | 4.37 | 8.49 | 9.32 |
| 1.163 | 1.85 | 6.67 | 12.92 | 14.20 | 1.213 | 1.83 | 5.24 | 10.16 | 11.17 | 1.263 | 1.81 | 4.36 | 8.45 | 9.28 |
| 1.164 | 1.85 | 6.64 | 12.85 | 14.12 | 1.214 | 1.83 | 5.22 | 10.12 | 11.12 | 1.264 | 1.81 | 4.35 | 8.42 | 9.25 |
| 1.165 | 1.85 | 6.60 | 12.78 | 14.04 | 1.215 | 1.83 | 5.20 | 10.09 | 11.09 | 1.265 | 1.81 | 4.33 | 8.39 | 9.23 |
| 1.166 | 1.85 | 6.56 | 12.71 | 13.97 | 1.216 | 1.83 | 5.18 | 10.04 | 11.03 | 1.266 | 1.81 | 4.32 | 8.37 | 9.19 |
| 1.167 | 1.85 | 6.53 | 12.64 | 13.89 | 1.217 | 1.83 | 5.16 | 10.00 | 10.99 | 1.267 | 1.81 | 4.30 | 8.34 | 9.16 |
| 1.168 | 1.85 | 6.49 | 12.58 | 13.82 | 1.218 | 1.83 | 5.14 | 9.96 | 10.94 | 1.268 | 1.81 | 4.29 | 8.31 | 9.14 |
| 1.169 | 1.85 | 6.46 | 12.51 | 13.74 | 1.219 | 1.83 | 5.12 | 9.92 | 10.90 | 1.269 | 1.81 | 4.28 | 8.29 | 9.11 |
| 1.170 | 1.85 | 6.42 | 12.43 | 13.66 | 1.220 | 1.83 | 5.10 | 9.89 | 10.87 | 1.270 | 1.81 | 4.26 | 8.26 | 9.08 |
| 1.171 | 1.85 | 6.39 | 12.38 | 13.60 | 1.221 | 1.83 | 5.07 | 9.84 | 10.81 | 1.271 | 1.81 | 4.25 | 8.23 | 9.05 |
| 1.172 | 1.85 | 6.35 | 12.31 | 13.53 | 1.222 | 1.83 | 5.05 | 9.80 | 10.77 | 1.272 | 1.81 | 4.24 | 8.21 | 9.02 |
| 1.173 | 1.85 | 6.32 | 12.25 | 13.46 | 1.223 | 1.83 | 5.03 | 9.76 | 10.73 | 1.273 | 1.81 | 4.22 | 8.18 | 8.99 |
| 1.174 | 1.85 | 6.29 | 12.18 | 13.39 | 1.224 | 1.83 | 5.01 | 9.72 | 10.68 | 1.274 | 1.81 | 4.21 | 8.15 | 8.96 |
| 1.175 | 1.85 | 6.25 | 12.10 | 13.30 | 1.225 | 1.83 | 5.00 | 9.69 | 10.65 | 1.275 | 1.81 | 4.20 | 8.13 | 8.93 |
| 1.176 | 1.85 | 6.22 | 12.06 | 13.25 | 1.226 | 1.83 | 4.98 | 9.65 | 10.60 | 1.276 | 1.81 | 4.18 | 8.11 | 8.91 |
| 1.177 | 1.85 | 6.19 | 12.00 | 13.18 | 1.227 | 1.83 | 4.96 | 9.61 | 10.56 | 1.277 | 1.81 | 4.17 | 8.08 | 8.88 |
| 1.178 | 1.85 | 6.16 | 11.93 | 13.11 | 1.228 | 1.83 | 4.94 | 9.57 | 10.52 | 1.278 | 1.81 | 4.16 | 8.05 | 8.85 |
| 1.179 | 1.85 | 6.13 | 11.87 | 13.05 | 1.229 | 1.83 | 4.92 | 9.53 | 10.48 | 1.279 | 1.81 | 4.15 | 8.03 | 8.82 |
| 1.180 | 1.85 | 6.10 | 11.79 | 12.96 | 1.230 | 1.83 | 4.90 | 9.50 | 10.44 | 1.280 | 1.81 | 4.13 | 8.01 | 8.79 |
| 1.181 | 1.85 | 6.07 | 11.76 | 12.92 | 1.231 | 1.83 | 4.88 | 9.46 | 10.40 | 1.281 | 1.81 | 4.12 | 7.98 | 8.77 |
| 1.182 | 1.85 | 6.04 | 11.70 | 12.86 | 1.232 | 1.83 | 4.86 | 9.43 | 10.36 | 1.282 | 1.81 | 4.11 | 7.96 | 8.74 |
| 1.183 | 1.85 | 6.01 | 11.64 | 12.79 | 1.233 | 1.83 | 4.84 | 9.39 | 10.32 | 1.283 | 1.80 | 4.10 | 7.93 | 8.71 |
| 1.184 | 1.85 | 5.98 | 11.58 | 12.73 | 1.234 | 1.83 | 4.83 | 9.36 | 10.28 | 1.284 | 1.80 | 4.08 | 7.91 | 8.69 |
| 1.185 | 1.85 | 5.95 | 11.50 | 12.64 | 1.235 | 1.83 | 4.81 | 9.32 | 10.24 | 1.285 | 1.80 | 4.07 | 7.89 | 8.66 |
| 1.186 | 1.85 | 5.92 | 11.47 | 12.61 | 1.236 | 1.82 | 4.79 | 9.29 | 10.20 | 1.286 | 1.80 | 4.06 | 7.86 | 8.64 |
| 1.187 | 1.85 | 5.89 | 11.42 | 12.54 | 1.237 | 1.82 | 4.77 | 9.25 | 10.17 | 1.287 | 1.80 | 4.05 | 7.84 | 8.61 |
| 1.188 | 1.85 | 5.86 | 11.36 | 12.49 | 1.238 | 1.82 | 4.76 | 9.22 | 10.13 | 1.288 | 1.80 | 4.04 | 7.81 | 8.59 |
| 1.189 | 1.85 | 5.83 | 11.31 | 12.43 | 1.239 | 1.82 | 4.74 | 9.18 | 10.09 | 1.289 | 1.80 | 4.02 | 7.79 | 8.56 |
| 1.190 | 1.84 | 5.81 | 11.26 | 12.37 | 1.240 | 1.82 | 4.72 | 9.15 | 10.05 | 1.290 | 1.80 | 4.01 | 7.77 | 8.53 |
| 1.191 | 1.84 | 5.78 | 11.20 | 12.31 | 1.241 | 1.82 | 4.70 | 9.12 | 10.02 | 1.291 | 1.80 | 4.00 | 7.75 | 8.51 |
| 1.192 | 1.84 | 5.75 | 11.15 | 12.25 | 1.242 | 1.82 | 4.69 | 9.08 | 9.98 | 1.292 | 1.80 | 3.99 | 7.72 | 8.48 |
| 1.193 | 1.84 | 5.73 | 11.10 | 12.20 | 1.243 | 1.82 | 4.67 | 9.05 | 9.95 | 1.293 | 1.80 | 3.98 | 7.70 | 8.46 |
| 1.194 | 1.84 | 5.70 | 11.05 | 12.14 | 1.244 | 1.82 | 4.65 | 9.02 | 9.91 | 1.294 | 1.80 | 3.97 | 7.68 | 8.43 |
| 1.195 | 1.84 | 5.67 | 11.00 | 12.08 | 1.245 | 1.82 | 4.64 | 8.99 | 9.87 | 1.295 | 1.80 | 3.95 | 7.66 | 8.41 |
| 1.196 | 1.84 | 5.65 | 10.95 | 12.03 | 1.246 | 1.82 | 4.62 | 8.95 | 9.84 | 1.296 | 1.80 | 3.94 | 7.63 | 8.39 |
| 1.197 | 1.84 | 5.62 | 10.90 | 11.97 | 1.247 | 1.82 | 4.60 | 8.92 | 9.81 | 1.297 | 1.80 | 3.93 | 7.61 | 8.36 |
| 1.198 | 1.84 | 5.60 | 10.85 | 11.92 | 1.248 | 1.82 | 4.59 | 8.89 | 9.77 | 1.298 | 1.80 | 3.92 | 7.59 | 8.33 |
| 1.199 | 1.84 | 5.57 | 10.80 | 11.87 | 1.249 | 1.82 | 4.57 | 8.86 | 9.74 | 1.299 | 1.80 | 3.91 | 7.57 | 8.31 |
| 1.200 | 1.84 | 5.55 | 10.75 | 11.81 | 1.250 | 1.82 | 4.56 | 8.83 | 9.70 | 1.300 | 1.80 | 3.90 | 7.55 | 8.29 |

*(continued)*



Copyright ASME International
Provided by IHS under license with ASME
No reproduction or networking permitted without license from IHS Not for Resale

**TABLE NM2-2 VALUES OF *T, Z, Y,* AND *U* (Factors Involving *K*) (CONT'D)**

| *K* | *T* | *Z* | *Y* | *U* | *K* | *T* | *Z* | *Y* | *U* | *K* | *T* | *Z* | *Y* | *U* |
|---|---|---|---|---|---|---|---|---|---|---|---|---|---|---|
| 1.301 | 1.80 | 3.89 | 7.53 | 8.27 | 1.351 | 1.78 | 3.42 | 6.61 | 7.27 | 1.401 | 1.75 | 3.08 | 5.93 | 6.50 |
| 1.302 | 1.80 | 3.88 | 7.50 | 8.24 | 1.352 | 1.78 | 3.42 | 6.60 | 7.25 | 1.402 | 1.75 | 3.07 | 5.92 | 6.49 |
| 1.303 | 1.80 | 3.87 | 7.48 | 8.22 | 1.353 | 1.77 | 3.41 | 6.58 | 7.23 | 1.403 | 1.75 | 3.07 | 5.90 | 6.47 |
| 1.304 | 1.80 | 3.86 | 7.46 | 8.20 | 1.354 | 1.77 | 3.40 | 6.57 | 7.21 | 1.404 | 1.75 | 3.06 | 5.89 | 6.46 |
| 1.305 | 1.80 | 3.84 | 7.44 | 8.18 | 1.355 | 1.77 | 3.39 | 6.55 | 7.19 | 1.405 | 1.75 | 3.05 | 5.88 | 6.45 |
| 1.306 | 1.80 | 3.83 | 7.42 | 8.16 | 1.356 | 1.77 | 3.38 | 6.53 | 7.17 | 1.406 | 1.75 | 3.05 | 5.87 | 6.44 |
| 1.307 | 1.80 | 3.82 | 7.40 | 8.13 | 1.357 | 1.77 | 3.38 | 6.52 | 7.16 | 1.407 | 1.75 | 3.04 | 5.86 | 6.43 |
| 1.308 | 1.79 | 3.81 | 7.38 | 8.11 | 1.358 | 1.77 | 3.37 | 6.50 | 7.14 | 1.408 | 1.75 | 3.04 | 5.84 | 6.41 |
| 1.309 | 1.79 | 3.80 | 7.36 | 8.09 | 1.359 | 1.77 | 3.36 | 6.49 | 7.12 | 1.409 | 1.75 | 3.03 | 5.83 | 6.40 |
| 1.310 | 1.79 | 3.79 | 7.34 | 8.07 | 1.360 | 1.77 | 3.35 | 6.47 | 7.11 | 1.410 | 1.75 | 3.02 | 5.82 | 6.39 |
| 1.311 | 1.79 | 3.78 | 7.32 | 8.05 | 1.361 | 1.77 | 3.35 | 6.45 | 7.09 | 1.411 | 1.75 | 3.02 | 5.81 | 6.38 |
| 1.312 | 1.79 | 3.77 | 7.30 | 8.02 | 1.362 | 1.77 | 3.34 | 6.44 | 7.08 | 1.412 | 1.75 | 3.01 | 5.80 | 6.37 |
| 1.313 | 1.79 | 3.76 | 7.28 | 8.00 | 1.363 | 1.77 | 3.33 | 6.42 | 7.06 | 1.413 | 1.75 | 3.01 | 5.78 | 6.35 |
| 1.314 | 1.79 | 3.75 | 7.26 | 7.98 | 1.364 | 1.77 | 3.32 | 6.41 | 7.04 | 1.414 | 1.75 | 3.00 | 5.77 | 6.34 |
| 1.315 | 1.79 | 3.74 | 7.24 | 7.96 | 1.365 | 1.77 | 3.32 | 6.39 | 7.03 | 1.415 | 1.75 | 3.00 | 5.76 | 6.33 |
| 1.316 | 1.79 | 3.73 | 7.22 | 7.94 | 1.366 | 1.77 | 3.31 | 6.38 | 7.01 | 1.416 | 1.75 | 2.99 | 5.75 | 6.32 |
| 1.317 | 1.79 | 3.72 | 7.20 | 7.92 | 1.367 | 1.77 | 3.30 | 6.37 | 7.00 | 1.417 | 1.75 | 2.98 | 5.74 | 6.31 |
| 1.318 | 1.79 | 3.71 | 7.18 | 7.89 | 1.368 | 1.77 | 3.30 | 6.35 | 6.98 | 1.418 | 1.75 | 2.98 | 5.72 | 6.29 |
| 1.319 | 1.79 | 3.70 | 7.16 | 7.87 | 1.369 | 1.77 | 3.29 | 6.34 | 6.97 | 1.419 | 1.75 | 2.97 | 5.71 | 6.28 |
| 1.320 | 1.79 | 3.69 | 7.14 | 7.85 | 1.370 | 1.77 | 3.28 | 6.32 | 6.95 | 1.420 | 1.75 | 2.97 | 5.70 | 6.27 |
| 1.321 | 1.79 | 3.68 | 7.12 | 7.83 | 1.371 | 1.77 | 3.27 | 6.31 | 6.93 | 1.421 | 1.75 | 2.96 | 5.69 | 6.26 |
| 1.322 | 1.79 | 3.67 | 7.10 | 7.81 | 1.372 | 1.77 | 3.27 | 6.30 | 6.91 | 1.422 | 1.75 | 2.96 | 5.68 | 6.25 |
| 1.323 | 1.79 | 3.67 | 7.09 | 7.79 | 1.373 | 1.77 | 3.26 | 6.28 | 6.90 | 1.423 | 1.75 | 2.95 | 5.67 | 6.23 |
| 1.324 | 1.79 | 3.66 | 7.07 | 7.77 | 1.374 | 1.77 | 3.25 | 6.27 | 6.89 | 1.424 | 1.74 | 2.95 | 5.66 | 6.22 |
| 1.325 | 1.79 | 3.65 | 7.05 | 7.75 | 1.375 | 1.77 | 3.25 | 6.25 | 6.87 | 1.425 | 1.74 | 2.94 | 5.65 | 6.21 |
| 1.326 | 1.79 | 3.64 | 7.03 | 7.73 | 1.376 | 1.77 | 3.24 | 6.24 | 6.86 | 1.426 | 1.74 | 2.94 | 5.64 | 6.20 |
| 1.327 | 1.79 | 3.63 | 7.01 | 7.71 | 1.377 | 1.77 | 3.23 | 6.22 | 6.84 | 1.427 | 1.74 | 2.93 | 5.63 | 6.19 |
| 1.328 | 1.78 | 3.62 | 7.00 | 7.69 | 1.378 | 1.76 | 3.22 | 6.21 | 6.82 | 1.428 | 1.74 | 2.92 | 5.62 | 6.17 |
| 1.329 | 1.78 | 3.61 | 6.98 | 7.67 | 1.379 | 1.76 | 3.22 | 6.19 | 6.81 | 1.429 | 1.74 | 2.92 | 5.61 | 6.16 |
| 1.330 | 1.78 | 3.60 | 6.96 | 7.65 | 1.380 | 1.76 | 3.21 | 6.18 | 6.80 | 1.430 | 1.74 | 2.91 | 5.60 | 6.15 |
| 1.331 | 1.78 | 3.59 | 6.94 | 7.63 | 1.381 | 1.76 | 3.20 | 6.17 | 6.79 | 1.431 | 1.74 | 2.91 | 5.59 | 6.14 |
| 1.332 | 1.78 | 3.58 | 6.92 | 7.61 | 1.382 | 1.76 | 3.20 | 6.16 | 6.77 | 1.432 | 1.74 | 2.90 | 5.58 | 6.13 |
| 1.333 | 1.78 | 3.57 | 6.91 | 7.59 | 1.383 | 1.76 | 3.19 | 6.14 | 6.75 | 1.433 | 1.74 | 2.90 | 5.57 | 6.11 |
| 1.334 | 1.78 | 3.57 | 6.89 | 7.57 | 1.384 | 1.76 | 3.18 | 6.13 | 6.74 | 1.434 | 1.74 | 2.89 | 5.56 | 6.10 |
| 1.335 | 1.78 | 3.56 | 6.87 | 7.55 | 1.385 | 1.76 | 3.18 | 6.12 | 6.73 | 1.435 | 1.74 | 2.89 | 5.55 | 6.09 |
| 1.336 | 1.78 | 3.55 | 6.85 | 7.53 | 1.386 | 1.76 | 3.17 | 6.11 | 6.72 | 1.436 | 1.74 | 2.88 | 5.54 | 6.08 |
| 1.337 | 1.78 | 3.54 | 6.84 | 7.51 | 1.387 | 1.76 | 3.16 | 6.10 | 6.70 | 1.437 | 1.74 | 2.88 | 5.53 | 6.07 |
| 1.338 | 1.78 | 3.53 | 6.82 | 7.50 | 1.388 | 1.76 | 3.16 | 6.08 | 6.68 | 1.438 | 1.74 | 2.87 | 5.52 | 6.05 |
| 1.339 | 1.78 | 3.52 | 6.81 | 7.48 | 1.389 | 1.76 | 3.15 | 6.07 | 6.67 | 1.439 | 1.74 | 2.87 | 5.51 | 6.04 |
| 1.340 | 1.78 | 3.51 | 6.79 | 7.46 | 1.390 | 1.76 | 3.15 | 6.06 | 6.66 | 1.440 | 1.74 | 2.86 | 5.50 | 6.03 |
| 1.341 | 1.78 | 3.51 | 6.77 | 7.44 | 1.391 | 1.76 | 3.14 | 6.05 | 6.64 | 1.441 | 1.74 | 2.86 | 5.49 | 6.02 |
| 1.342 | 1.78 | 3.50 | 6.76 | 7.42 | 1.392 | 1.76 | 3.13 | 6.04 | 6.63 | 1.442 | 1.74 | 2.85 | 5.48 | 6.01 |
| 1.343 | 1.78 | 3.49 | 6.74 | 7.41 | 1.393 | 1.76 | 3.13 | 6.02 | 6.61 | 1.443 | 1.74 | 2.85 | 5.47 | 6.00 |
| 1.344 | 1.78 | 3.48 | 6.72 | 7.39 | 1.394 | 1.76 | 3.12 | 6.01 | 6.60 | 1.444 | 1.74 | 2.84 | 5.46 | 5.99 |
| 1.345 | 1.78 | 3.47 | 6.71 | 7.37 | 1.395 | 1.76 | 3.11 | 6.00 | 6.59 | 1.445 | 1.74 | 2.84 | 5.45 | 5.98 |
| 1.346 | 1.78 | 3.46 | 6.69 | 7.35 | 1.396 | 1.76 | 3.11 | 5.99 | 6.58 | 1.446 | 1.74 | 2.83 | 5.44 | 5.97 |
| 1.347 | 1.78 | 3.46 | 6.68 | 7.33 | 1.397 | 1.76 | 3.10 | 5.98 | 6.56 | 1.447 | 1.73 | 2.83 | 5.43 | 5.96 |
| 1.348 | 1.78 | 3.45 | 6.66 | 7.32 | 1.398 | 1.75 | 3.10 | 5.96 | 6.55 | 1.448 | 1.73 | 2.82 | 5.42 | 5.95 |
| 1.349 | 1.78 | 3.44 | 6.65 | 7.30 | 1.399 | 1.75 | 3.09 | 5.95 | 6.53 | 1.449 | 1.73 | 2.82 | 5.41 | 5.94 |
| 1.350 | 1.78 | 3.43 | 6.63 | 7.28 | 1.400 | 1.75 | 3.08 | 5.94 | 6.52 | 1.450 | 1.73 | 2.81 | 5.40 | 5.93 |

*(continued)*



Copyright ASME International
Provided by IHS under license with ASME
No reproduction or networking permitted without license from IHS
Not for Resale

**TABLE NM2-2 VALUES OF *T, Z, Y,* AND *U* (Factors Involving *K*) (CONT'D)**

| *K* | *T* | *Z* | *Y* | *U* | *K* | *T* | *Z* | *Y* | *U* | *K* | *T* | *Z* | *Y* | *U* |
|---|---|---|---|---|---|---|---|---|---|---|---|---|---|---|
| 1.451 | 1.73 | 2.81 | 5.39 | 5.92 | 1.496 | 1.71 | 2.62 | 4.99 | 5.48 | 1.541 | 1.69 | 2.45 | 4.66 | 5.12 |
| 1.452 | 1.73 | 2.80 | 5.38 | 5.91 | 1.497 | 1.71 | 2.61 | 4.98 | 5.47 | 1.542 | 1.69 | 2.45 | 4.65 | 5.11 |
| 1.453 | 1.73 | 2.80 | 5.37 | 5.90 | 1.498 | 1.71 | 2.61 | 4.98 | 5.47 | 1.543 | 1.69 | 2.45 | 4.64 | 5.11 |
| 1.454 | 1.73 | 2.80 | 5.36 | 5.89 | 1.499 | 1.71 | 2.60 | 4.97 | 5.46 | 1.544 | 1.69 | 2.45 | 4.64 | 5.10 |
| 1.455 | 1.73 | 2.79 | 5.35 | 5.88 | 1.500 | 1.71 | 2.60 | 4.96 | 5.45 | 1.545 | 1.69 | 2.44 | 4.63 | 5.09 |
| 1.456 | 1.73 | 2.79 | 5.34 | 5.87 | 1.501 | 1.71 | 2.60 | 4.95 | 5.44 | 1.546 | 1.69 | 2.44 | 4.63 | 5.08 |
| 1.457 | 1.73 | 2.78 | 5.33 | 5.86 | 1.502 | 1.71 | 2.59 | 4.94 | 5.43 | 1.547 | 1.69 | 2.44 | 4.62 | 5.07 |
| 1.458 | 1.73 | 2.78 | 5.32 | 5.85 | 1.503 | 1.71 | 2.59 | 4.94 | 5.43 | 1.548 | 1.69 | 2.43 | 4.62 | 5.07 |
| 1.459 | 1.73 | 2.77 | 5.31 | 5.84 | 1.504 | 1.71 | 2.58 | 4.93 | 5.42 | 1.549 | 1.69 | 2.43 | 4.61 | 5.06 |
| 1.460 | 1.73 | 2.77 | 5.30 | 5.83 | 1.505 | 1.71 | 2.58 | 4.92 | 5.41 | 1.550 | 1.69 | 2.43 | 4.60 | 5.05 |
| 1.461 | 1.73 | 2.76 | 5.29 | 5.82 | 1.506 | 1.71 | 2.58 | 4.91 | 5.40 | 1.551 | 1.69 | 2.42 | 4.60 | 5.05 |
| 1.462 | 1.73 | 2.76 | 5.28 | 5.80 | 1.507 | 1.71 | 2.57 | 4.90 | 5.39 | 1.552 | 1.69 | 2.42 | 4.59 | 5.04 |
| 1.463 | 1.73 | 2.75 | 5.27 | 5.79 | 1.508 | 1.71 | 2.57 | 4.90 | 5.39 | 1.553 | 1.69 | 2.42 | 4.58 | 5.03 |
| 1.464 | 1.73 | 2.75 | 5.26 | 5.78 | 1.509 | 1.71 | 2.57 | 4.89 | 5.38 | 1.554 | 1.69 | 2.41 | 4.58 | 5.03 |
| 1.465 | 1.73 | 2.74 | 5.25 | 5.77 | 1.510 | 1.71 | 2.56 | 4.88 | 5.37 | 1.555 | 1.69 | 2.41 | 4.57 | 5.02 |
| 1.466 | 1.73 | 2.74 | 5.24 | 5.76 | 1.511 | 1.71 | 2.56 | 4.87 | 5.36 | 1.556 | 1.69 | 2.41 | 4.57 | 5.02 |
| 1.467 | 1.73 | 2.74 | 5.23 | 5.74 | 1.512 | 1.71 | 2.56 | 4.86 | 5.35 | 1.557 | 1.69 | 2.40 | 4.56 | 5.01 |
| 1.468 | 1.72 | 2.73 | 5.22 | 5.73 | 1.513 | 1.71 | 2.55 | 4.86 | 5.35 | 1.558 | 1.69 | 2.40 | 4.56 | 5.00 |
| 1.469 | 1.72 | 2.73 | 5.21 | 5.72 | 1.514 | 1.71 | 2.55 | 4.85 | 5.34 | 1.559 | 1.69 | 2.40 | 4.55 | 4.99 |
| 1.470 | 1.72 | 2.72 | 5.20 | 5.71 | 1.515 | 1.71 | 2.54 | 4.84 | 5.33 | 1.560 | 1.69 | 2.40 | 4.54 | 4.99 |
| 1.471 | 1.72 | 2.72 | 5.19 | 5.70 | 1.516 | 1.71 | 2.54 | 4.83 | 5.32 | 1.561 | 1.69 | 2.39 | 4.54 | 4.98 |
| 1.472 | 1.72 | 2.71 | 5.18 | 5.69 | 1.517 | 1.71 | 2.54 | 4.82 | 5.31 | 1.562 | 1.69 | 2.39 | 4.53 | 4.97 |
| 1.473 | 1.72 | 2.71 | 5.18 | 5.68 | 1.518 | 1.71 | 2.53 | 4.82 | 5.31 | 1.563 | 1.68 | 2.39 | 4.52 | 4.97 |
| 1.474 | 1.72 | 2.71 | 5.17 | 5.67 | 1.519 | 1.70 | 2.53 | 4.81 | 5.30 | 1.564 | 1.68 | 2.38 | 4.51 | 4.96 |
| 1.475 | 1.72 | 2.70 | 5.16 | 5.66 | 1.520 | 1.70 | 2.53 | 4.80 | 5.29 | 1.565 | 1.68 | 2.38 | 4.51 | 4.95 |
| 1.476 | 1.72 | 2.70 | 5.15 | 5.65 | 1.521 | 1.70 | 2.52 | 4.79 | 5.28 | 1.566 | 1.68 | 2.38 | 4.50 | 4.95 |
| 1.477 | 1.72 | 2.69 | 5.14 | 5.64 | 1.522 | 1.70 | 2.52 | 4.79 | 5.27 | 1.567 | 1.68 | 2.37 | 4.50 | 4.94 |
| 1.478 | 1.72 | 2.69 | 5.14 | 5.63 | 1.523 | 1.70 | 2.52 | 4.78 | 5.27 | 1.568 | 1.68 | 2.37 | 4.49 | 4.93 |
| 1.479 | 1.72 | 2.68 | 5.13 | 5.62 | 1.524 | 1.70 | 2.51 | 4.78 | 5.26 | 1.569 | 1.68 | 2.37 | 4.48 | 4.92 |
| 1.480 | 1.72 | 2.68 | 5.12 | 5.61 | 1.525 | 1.70 | 2.51 | 4.77 | 5.25 | 1.570 | 1.68 | 2.37 | 4.48 | 4.92 |
| 1.481 | 1.72 | 2.68 | 5.11 | 5.60 | 1.526 | 1.70 | 2.51 | 4.77 | 5.24 | 1.571 | 1.68 | 2.36 | 4.47 | 4.91 |
| 1.482 | 1.72 | 2.67 | 5.10 | 5.59 | 1.527 | 1.70 | 2.50 | 4.76 | 5.23 | 1.572 | 1.68 | 2.36 | 4.47 | 4.91 |
| 1.483 | 1.72 | 2.67 | 5.10 | 5.59 | 1.528 | 1.70 | 2.50 | 4.76 | 5.23 | 1.573 | 1.68 | 2.36 | 4.46 | 4.90 |
| 1.484 | 1.72 | 2.66 | 5.09 | 5.58 | 1.529 | 1.70 | 2.49 | 4.75 | 5.22 | 1.574 | 1.68 | 2.35 | 4.46 | 4.89 |
| 1.485 | 1.72 | 2.66 | 5.08 | 5.57 | 1.530 | 1.70 | 2.49 | 4.74 | 5.21 | 1.575 | 1.68 | 2.35 | 4.45 | 4.89 |
| 1.486 | 1.72 | 2.66 | 5.07 | 5.56 | 1.531 | 1.70 | 2.49 | 4.73 | 5.20 | 1.576 | 1.68 | 2.35 | 4.44 | 4.88 |
| 1.487 | 1.72 | 2.65 | 5.06 | 5.55 | 1.532 | 1.70 | 2.48 | 4.72 | 5.19 | 1.577 | 1.68 | 2.35 | 4.44 | 4.88 |
| 1.488 | 1.72 | 2.65 | 5.06 | 5.55 | 1.533 | 1.70 | 2.48 | 4.72 | 5.19 | 1.578 | 1.68 | 2.34 | 4.43 | 4.87 |
| 1.489 | 1.72 | 2.64 | 5.05 | 5.54 | 1.534 | 1.70 | 2.48 | 4.71 | 5.18 | 1.579 | 1.68 | 2.34 | 4.42 | 4.86 |
| 1.490 | 1.72 | 2.64 | 5.04 | 5.53 | 1.535 | 1.70 | 2.47 | 4.70 | 5.17 | 1.580 | 1.68 | 2.34 | 4.42 | 4.86 |
| 1.491 | 1.72 | 2.64 | 5.03 | 5.52 | 1.536 | 1.70 | 2.47 | 4.69 | 5.16 | . . . | . . . | . . . | . . . | . . . |
| 1.492 | 1.72 | 2.63 | 5.02 | 5.51 | 1.537 | 1.70 | 2.47 | 4.68 | 5.15 | . . . | . . . | . . . | . . . | . . . |
| 1.493 | 1.71 | 2.63 | 5.02 | 5.51 | 1.538 | 1.69 | 2.46 | 4.68 | 5.15 | . . . | . . . | . . . | . . . | . . . |
| 1.494 | 1.71 | 2.62 | 5.01 | 5.50 | 1.539 | 1.69 | 2.46 | 4.67 | 5.14 | . . . | . . . | . . . | . . . | . . . |
| 1.495 | 1.71 | 2.62 | 5.00 | 5.49 | 1.540 | 1.69 | 2.46 | 4.66 | 5.13 | . . . | . . . | . . . | . . . | . . . |



Copyright ASME International
Provided by IHS under license with ASME
No reproduction or networking permitted without license from IHS Not for Resale

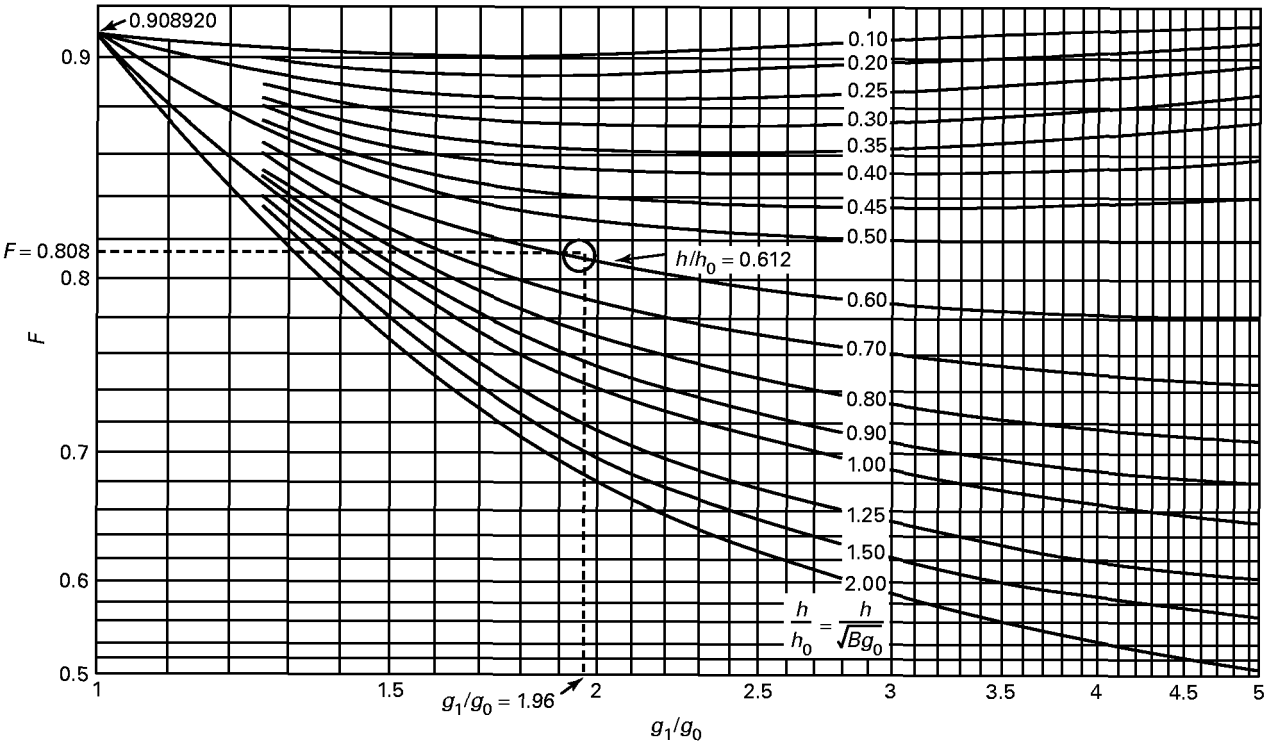


**FIG. NM2-3 VALUES OF *F* (Integral Flange Factors)**



Copyright ASME International
Provided by IHS under license with ASME
No reproduction or networking permitted without license from IHS
Not for Resale

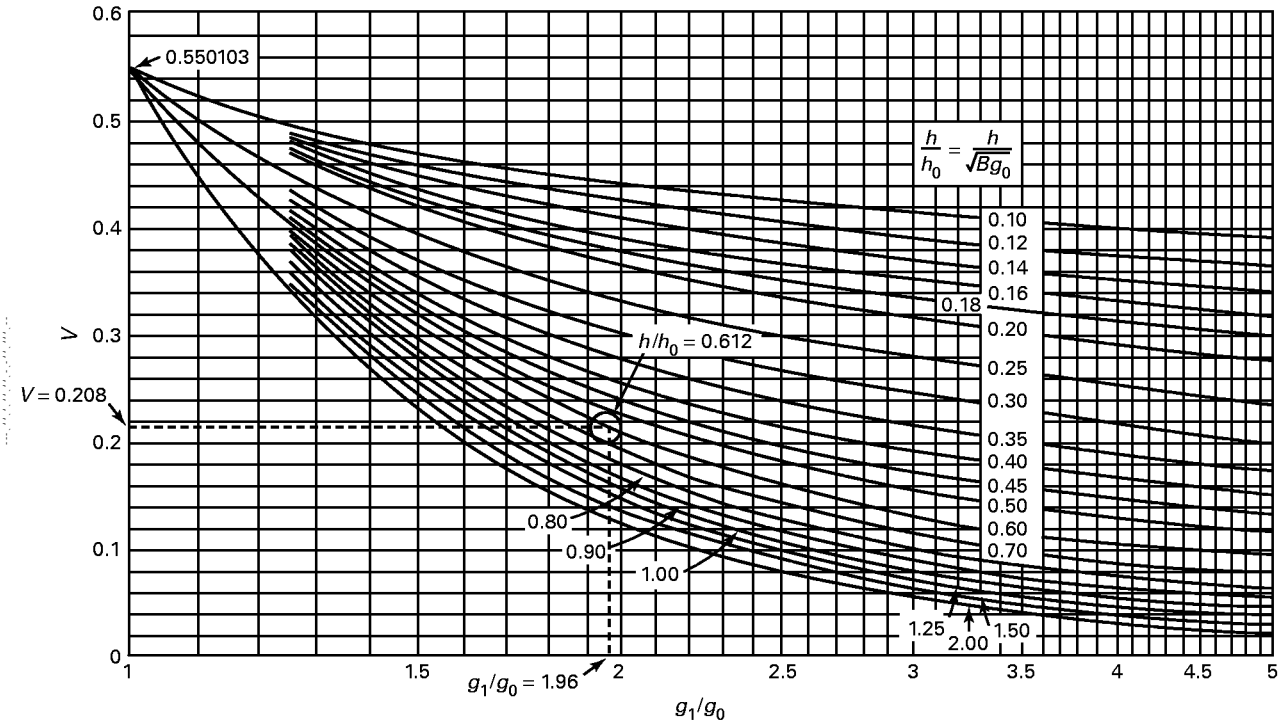


**FIG. NM2-4 VALUES OF *V* (Integral Flange Factors)**



Copyright ASME International
Provided by IHS under license with ASME
No reproduction or networking permitted without license from IHS Not for Resale

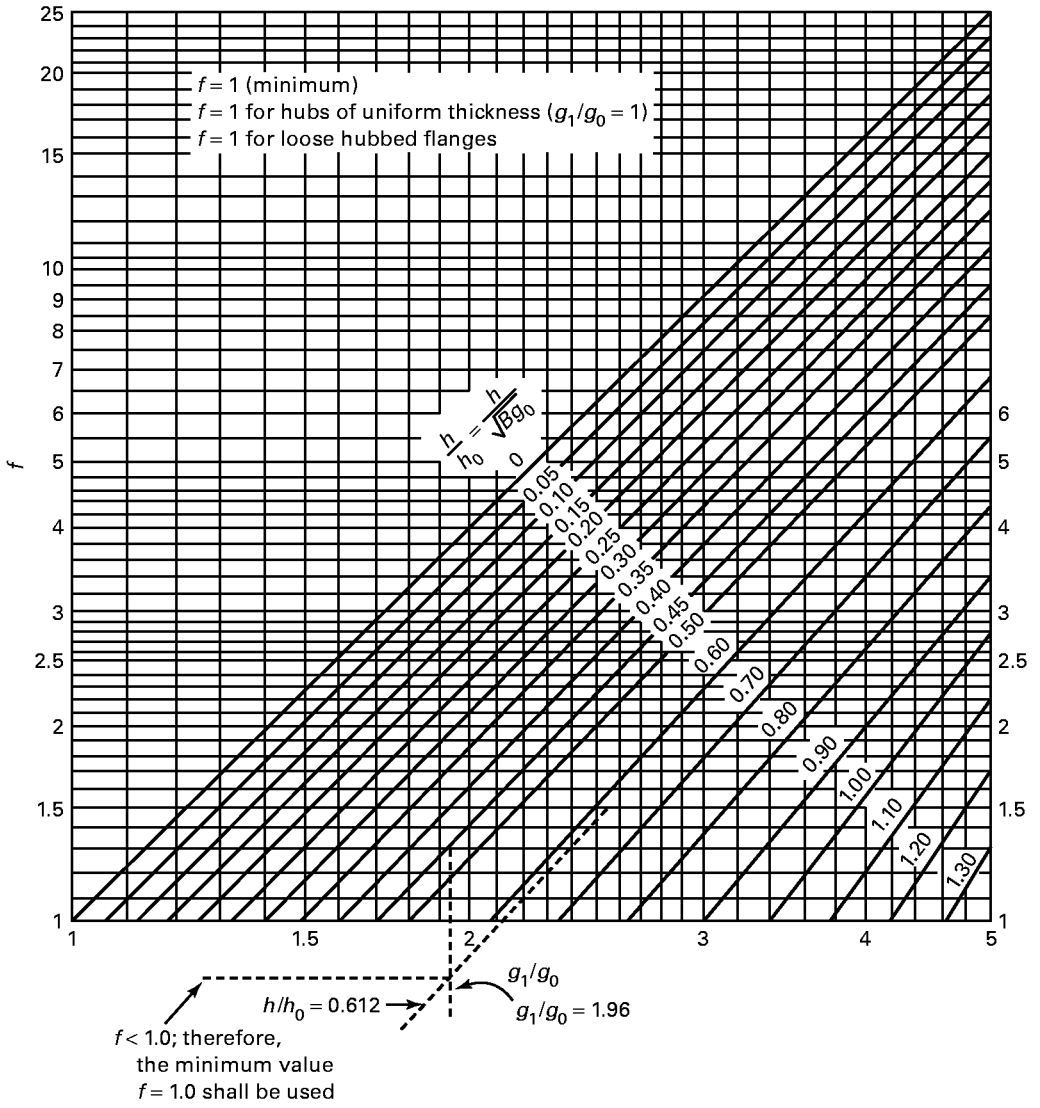


**FIG. NM2-5 VALUES OF *f* (Hub Stress Correction Factors)**



Copyright ASME International
Provided by IHS under license with ASME
No reproduction or networking permitted without license from IHS
Not for Resale

**Design of Flat-Face Integral Body Flanges With Full-Face Gaskets**

| Design Conditions | | | | | Bolting Calculations | | |
|---|---|---|---|---|---|---|---|
| Design pressure $P$ = 30 | | | | psi | Lever arms | $h_G = \frac{C-B}{4} = \frac{77-72}{4}$ = 1.25 in. | $h'_G = \frac{A-C}{4} = \frac{78.5-77}{4}$ = 0.375 in. |
| Design temperature $T$ = 180 | | | | °F | | | |
| Atmos. temperature $T$ = 70 | | | | °F | $G = C - 2h_G = 77 - (2)(1.25) = 74.5$ in. | $b = 0.25(C - B) = 1.25$ in. | |
| Flange material: RTP | | | | | $H'_{gy} = (h_G/h'_G)(b\pi Gy) = (1.25/0.375)(1.25)\pi(74.5)(50) = 48{,}760$ lb | | |
| Bolting material: C.S. (193-B7) | | | | | $Wm_2 = b\pi Gy + H'_{gy} = (1.25)\pi(74.5)(50) + 48{,}760 = 63{,}388$ lb | | |
| Gasket material: Neoprene | | | | | $H_p = 2b\pi GmP = (2)(1.25)\pi(74.5)(0.5)(30) = 8{,}777$ lb | | |
| Allowable Stresses | Flange | Design temp. | $S_{fo}$ = 3,000 | psi | $H'_p = H_p(h_G/h'_G) = 8{,}777\ (1.25/0.375) = 29{,}257$ lb | | |
| | Bolting | Design temp. | $S_b$ = 25,000 | psi | $H = 0.7854G^2P = 0.7854\ (74.5)^2\ (30) = 130{,}775$ lb | | |
| | | Atmos. temp. | $S_a$ = 25,000 | psi | $Wm_1 = H + H_p + H'_p = 130{,}775 + 8{,}777 + 29{,}257 = 168{,}809$ lb | | |
| Gasket Factors | | | | | $A_m$ = greater of $\frac{Wm_2}{S_a}$ or $\frac{Wm_1}{S_b} = \frac{168{,}809}{25{,}000}$ = 6.752 sq in. | | |
| $y$ = 50 psi | | $m$ = 0.5 | | | $A_B$ = (64) ½ in. dia. bolts = (64) (0.126) = 8.064 sq in. | | |
| | | | | | $W = 0.5(A_m + A_B)S_a = 0.5\ (6.752 + 8.064)\ (25{,}000) = 185{,}200$ lb | | |

| Flange Loads | Lever Arms | Flange Moments (Design Cond.) |
|---|---|---|
| $H_D = 0.7854B^2P$ = 122,145 lb | $h_D = R + 0.5g_1$ = 1.7655 in. | $M_D = H_D h_D$ = 215,647 in.-lb |
| $H_T = H - H_D$ = 8,630 lb | $h_T = 0.5(R + g_1 + h_G)$ = 1.875 in. | $M_T = H_T h_T$ = 16,181 in.-lb |
| | | $M_O = M_D + M_T$ = 231,828 in.-lb |

| Reverse moment | | | | |
|---|---|---|---|---|
| $H_G = W - H$ = 54,425 lb | $h''_G = \frac{h_G h'_G}{h_G + h'_G}$ = 0.2885 in. | $M_G = H_G h''_G$ = 15,702 in.-lb |

| Allowable Stress | Stress Calculations | Shape Constants |
|---|---|---|
| $S_{fo}$ = 3,000 | Long hub $S_H = fM/Lg_1^2$ = 2,399 psi | $K = A/B = 78.5/72 = 1.0902$ |
| $S_{fo}$ = 3,000 | Radial flg. $S_R = N_1M/Lt^2$ = 3,031 psi | $T$ = 1.88 $Z$ = 11.63 $Y$ = 22.44 $U$ = 24.66 |
| $S_{fo}$ = 3,000 | Tang. flg. $S_T = (YM/t^2) - ZS_R$ = –283 psi | $g_1/g_0 = 1.469/0.75 = 1.959$ |
| $S_{fo}$ = 3,000 | Greater of $0.5(S_H + S_R)$ or $0.5(S_H + S_T)$ = 2,715 psi | $h_0 = (Bg_0)^{1/2} = [(72)(0.75)]^{1/2} = 7.348$<br>$h/h_0 = 4.5/7.348 = 0.6124$ |
| $S_{fo}$ = 3,000 | Radial stress at bolt circle $S_{RAD} = \frac{6M_G}{t^2(\pi C - nd_1)}$ = 225 psi | $F$ = 0.808<br>$V$ = 0.208<br>$f$ = 1.0 (1 min.) |

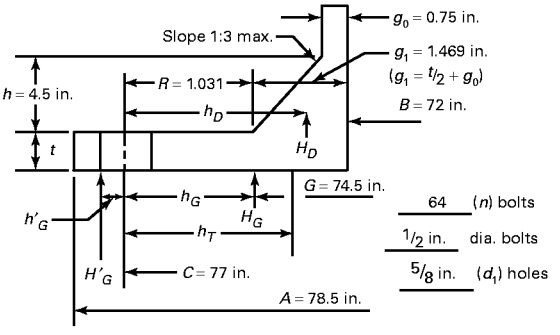


$e = F/h_0 = 0.808/7.348 = 0.110$

$d = \frac{U}{V} h_0 g_0^2 = (24.66/0.208)(7.348)(0.75)^2 = 490$

$M = M_O/B = 231{,}828/72 = 3{,}220$

Approximation of required thickness

$$t = 0.29\left(\frac{MY}{S_{fo}}\right)^{1/2}$$

$$= 0.29 \times \left[\frac{(3{,}220)\ (22.44)}{3{,}000}\right]^{1/2} = 1.43 \text{ in.}$$

$N_1 = \frac{4}{3}\ te + 1 = (1.33)\ (1.43)\ (0.110) + 1 = 1.21$

$L = \frac{te+1}{T} + \frac{t^3}{d} = \frac{(1.43)(0.110) + 1}{1.88} + \frac{(1.43)^3}{490} = 0.622$

**FIG. NM2-6 DESIGN OF FLAT-FACE INTEGRAL BODY FLANGES WITH FULL-FACE GASKETS (Example Calculation — 72 in. Flange at 30 psi)**



Copyright ASME International
Provided by IHS under license with ASME
No reproduction or networking permitted without license from IHS Not for Resale

Copyright ASME International
Provided by IHS under license with ASME
No reproduction or networking permitted without license from IHS





## TABLE NM2-3
## BODY FLANGE DESIGN USING FULL-FACE GASKETS, MAXIMUM STRESS LESS THAN 3,000 psi —TYPE II LAMINATES

| | Nominal Flange Diameter | | | | | | | | | | | | | |
|---|---|---|---|---|---|---|---|---|---|---|---|---|---|---|
| **Criterion** | **24** | **30** | **36** | **42** | **48** | **54** | **60** | **72** | **84** | **96** | **108** | **120** | **132** | **144** |
| *P* | 5 | 5 | 5 | 5 | 5 | 5 | 5 | 5 | 5 | 5 | 5 | 5 | 5 | 5 |
| *t* | 0.5 | 0.5 | 0.5 | 0.5 | 0.625 | 0.688 | 0.813 | 1.063 | 1.25 | 1.563 | 1.813 | 2.125 | 2.438 | 2.375 |
| *g* | 0.25 | 0.25 | 0.25 | 0.25 | 0.25 | 0.25 | 0.25 | 0.25 | 0.25 | 0.25 | 0.25 | 0.25 | 0.313 | 0.313 |
| *P* | 10 | 10 | 10 | 10 | 10 | 10 | 10 | 10 | 10 | 10 | 10 | 10 | 10 | 10 |
| *t* | 0.5 | 0.563 | 0.625 | 0.75 | 0.938 | 1.0 | 1.0 | 1.25 | 1.375 | 1.625 | 1.875 | 2.0 | 2.125 | 2.375 |
| *g* | 0.25 | 0.25 | 0.25 | 0.25 | 0.25 | 0.25 | 0.313 | 0.313 | 0.375 | 0.438 | 0.375 | 0.438 | 0.5 | 0.5 |
| *P* | 15 | 15 | 15 | 15 | 15 | 15 | 15 | 15 | 15 | 15 | 15 | 15 | 15 | 15 |
| *t* | 0.625 | 0.688 | 0.813 | 0.938 | 1.0 | 1.125 | 1.125 | 1.25 | 1.438 | 1.688 | 1.875 | 2.0 | 2.188 | 2.5 |
| *g* | 0.25 | 0.25 | 0.25 | 0.25 | 0.375 | 0.375 | 0.375 | 0.375 | 0.438 | 0.5 | 0.563 | 0.625 | 0.813 | 0.75 |
| *P* | 20 | 20 | 20 | 20 | 20 | 20 | 20 | 20 | 20 | 20 | 20 | 20 | 20 | 20 |
| *t* | 0.75 | 0.813 | 0.875 | 0.938 | 1.0 | 1.063 | 1.125 | 1.25 | 1.438 | 1.625 | 1.813 | 2.0 | 2.125 | 2.5 |
| *g* | 0.25 | 0.313 | 0.313 | 0.375 | 0.375 | 0.375 | 0.438 | 0.5 | 0.563 | 0.688 | 0.75 | 0.813 | 0.875 | 1.0 |
| *P* | 25 | 25 | 25 | 25 | 25 | 25 | 25 | 25 | 25 | 25 | 25 | 25 | 25 | 25 |
| *t* | 0.813 | 0.875 | 0.938 | 1.0 | 1.125 | 1.188 | 1.188 | 1.375 | 1.563 | 1.813 | 1.938 | 2.125 | 2.313 | 2.438 |
| *g* | 0.313 | 0.313 | 0.375 | 0.375 | 0.5 | 0.5 | 0.5 | 0.625 | 0.75 | 0.813 | 0.875 | 1.0 | 1.125 | 1.25 |
| *P* | 30 | 30 | 30 | 30 | 30 | 30 | 30 | 30 | 30 | 30 | 30 | 30 | 30 | 30 |
| *t* | 0.875 | 0.938 | 1.0 | 1.063 | 1.375 | 1.25 | 1.313 | 1.438 | 1.625 | 1.938 | 2.125 | 2.313 | 2.438 | 2.625 |
| *g* | 0.313 | 0.375 | 0.375 | 0.5 | 0.5 | 0.563 | 0.625 | 0.75 | 0.875 | 1.0 | 1.125 | 1.25 | 1.375 | 1.438 |

GENERAL NOTE: Flange design based on the following criteria:
*P* = allowable pressure, psi
*t* = flange thickness, in.
*g* = thickness of hub at end of taper (pipe thickness), in. — Type II laminate properties
*h* = hub length, in. = 3*t*
*m* = gasket factor (assumed *m* = 0.5)
*Y* = gasket unit seating load (assumed *Y* = 50 psi)
maximum flange and hub stress = 3,000 psi (based on use of mat/woven roving reinforcement, Type II laminate)
maximum bolt stress = 18,800 psi
maximum design temperature = 180°F



Not for Resale

Copyright ASME International
Provided by IHS under license with ASME
No reproduction or networking permitted without license from IHS



## TABLE NM2-4
## BODY FLANGE DESIGN USING FULL-FACE GASKETS, MAXIMUM STRESS LESS THAN 1,800 psi — TYPE I LAMINATES

| | Nominal Flange Diameter | | | | | | | | | | | | | |
|---|---|---|---|---|---|---|---|---|---|---|---|---|---|---|
| **Criterion** | **24** | **30** | **36** | **42** | **48** | **54** | **60** | **72** | **84** | **96** | **108** | **120** | **132** | **144** |
| *P* | 5 | 5 | 5 | 5 | 5 | 5 | 5 | 5 | 5 | 5 | 5 | 5 | 5 | 5 |
| *t* | 0.625 | 0.625 | 0.625 | 0.688 | 0.875 | 0.938 | 1.063 | 1.313 | 1.438 | 1.75 | 2.0 | 2.125 | 2.25 | 2.5 |
| *g* | 0.25 | 0.25 | 0.25 | 0.25 | 0.25 | 0.25 | 0.25 | 0.25 | 0.25 | 0.313 | 0.313 | 0.375 | 0.375 | 0.438 |
| *P* | 10 | 10 | 10 | 10 | 10 | 10 | 10 | 10 | 10 | 10 | 10 | 10 | 10 | 10 |
| *t* | 0.625 | 0.75 | 0.875 | 0.938 | 1.0 | 1.063 | 1.125 | 1.313 | 1.5 | 1.813 | 1.938 | 2.0 | 2.313 | 2.375 |
| *g* | 0.25 | 0.25 | 0.25 | 0.25 | 0.313 | 0.313 | 0.375 | 0.438 | 0.5 | 0.563 | 0.625 | 0.75 | 0.75 | 0.875 |
| *P* | 15 | 15 | 15 | 15 | 15 | 15 | 15 | 15 | 15 | 15 | 15 | 15 | 15 | 15 |
| *t* | 0.813 | 0.875 | 0.938 | 1.0 | 1.125 | 1.188 | 1.25 | 1.375 | 1.563 | 1.813 | 1.938 | 2.125 | 2.313 | 2.438 |
| *g* | 0.25 | 0.313 | 0.375 | 0.375 | 0.438 | 0.5 | 0.5 | 0.625 | 0.75 | 0.813 | 0.938 | 1.0 | 1.125 | 1.25 |
| *P* | 20 | 20 | 20 | 20 | 20 | 20 | 20 | 20 | 20 | 20 | 20 | 20 | 20 | 20 |
| *t* | 0.938 | 1.0 | 1.0 | 1.125 | 1.25 | 1.313 | 1.375 | 1.5 | 1.688 | 2.0 | 2.188 | 2.375 | 2.563 | 2.75 |
| *g* | 0.313 | 0.375 | 0.438 | 0.5 | 0.563 | 0.625 | 0.688 | 0.813 | 1.0 | 1.125 | 1.25 | 1.375 | 1.5 | 1.625 |
| *P* | 25 | 25 | 25 | 25 | 25 | 25 | *25 | *25 | *25 | *25 | *25 | *25 | *25 | *25 |
| *t* | 1.063 | 1.063 | 1.125 | 1.188 | 1.375 | 1.375 | 1.438 | 1.625 | 1.813 | 2.125 | 2.313 | 2.563 | 2.75 | 2.875 |
| *g* | 0.375 | 0.438 | 0.5 | 0.625 | 0.688 | 0.75 | 0.875 | 1.0 | 1.188 | 1.375 | 1.5 | 1.688 | 1.875 | 2.0 |
| *P* | 30 | 30 | 30 | 30 | 30 | 30 | *30 | *30 | *30 | *30 | *30 | *30 | *30 | *30 |
| *t* | 1.063 | 1.125 | 1.188 | 1.25 | 1.438 | 1.5 | 1.563 | 1.75 | 1.938 | 2.25 | 2.438 | 2.625 | 2.875 | 3.063 |
| *g* | 0.438 | 0.5 | 0.625 | 0.75 | 0.813 | 0.938 | 1.0 | 1.25 | 1.313 | 1.625 | 1.813 | 2.0 | 2.25 | 2.438 |

GENERAL NOTES:

(a) Flange design based on the following criteria:
*P* = allowable pressure, psi
*t* = flange thickness, in.
*g* = thickness of hub at end of taper (pipe thickness), in. — Type I laminate properties
*h* = hub length, in. = 3*t*
*m* = gasket factor (assumed *m* = 0.5)
*Y* = gasket unit seating load (assumed *Y* = 50 psi)
maximum flange and hub stress = 1,800 psi (based on use of mat reinforcement, Type I laminate)
maximum bolt stress = 18,800 psi
maximum design temperature = 180°F

(b) Sizes preceded by an asterisk should be used with SAE steel washers to minimize interference with the hub.





Not for Resale

# NONMANDATORY APPENDIX NM-3
# SEISMIC, WIND, AND SNOW LOADINGS

## (00) NM3-100 TYPICAL CODES

The User/purchaser is responsible for the specification of the appropriate code to be used. The code specifies to the designer the magnitude and direction of the seismic, wind, and snow loads acting on the vessel. The designer must use recognized stress analysis methods to compute the stresses resulting from these loads.

The following codes are listed as examples of codes that may be specified:

*(a)* Uniform Building Code, published by International Conference of Building Officials

*(b)* National Building Code, published by American Insurance Association

*(c)* Minimum Design Loads for Buildings and Other Structures, ASCE 7, published by American Society of Civil Engineers

*(d)* International Building Code, published by International Code Council (ICC)

*(e)* Standard Building Code, published by Southern Building Code Congress International

*(f)* British Standard BS 6399 Part 2, Loading for Buildings, Code of Practice for Wind Loads

*(g)* Dutch Standard NEN 6702 — TGB 1990, Loadings and Deformations

*(h)* Eurocode 1, Part 2-4, Basis of Design and Actions on Structures

*(i)* Eurocode 8, Part 1-5, Design Provisions for Earthquake Resistance of Structures

*(j)* Mexican Code, Manual de Diseño de Obras Civiles de la Comisión Federal de Electricidad

*(k)* National Building Code of Canada

## NM3-200 NOMENCLATURE

$C$ = distance of neutral axis, in.
$D$ = nominal vessel diameter, ft
$D_i$ = inside diameter, in.
$D_o$ = outside diameter, in.
$E$ = tensile modulus of elasticity, psi
$F$ = design factor
$F_{cra}$ = allowable axial stress (buckling)
$F_{crb}$ = allowable flexural stress (buckling)
$F_{crv}$ = allowable shear stress (buckling)
$F_h$ = allowable hoop tensile stress (ultimate)
$f_a$ = axial stress
$f_b$ = flexural stress
$f_{cra}$ = critical axial buckling stress
$f_{crb}$ = critical flexural buckling stress
$f_{crv}$ = critical shear buckling stress
$f_h$ = hoop tensile stress
$f_v$ = shear stress
$H$ = vessel height, ft
$I$ = moment of inertia of vessel shell cross section, in.$^4$
$M_w$ = bending moment due to wind load, ft-lb
$N_a$ = axial stress resultant, lb/in.
$P$ = hydrostatic pressure (total), psig
$q$ = wind pressure, psf
$R_c$ = head crown radius, in.
$S_u$ = ultimate tensile strength, psi
$SF$ = shape factor
$U$ = uniform wind pressure load, lb/ft
$U_T$ = wind load on top flange, lb/ft
$W$ = total wind load, lb

## NM3-300 EXAMPLES

*(a) Wind Loads*

*(1)* cantilevered vessel empty (flat bottomed on slab)

*(2)* suspended vessel empty (ring or skirt supported)

*(3)* cantilevered vessel at operating conditions

*(4)* suspended vessel at operating conditions

*(b) Snow Loads*

*(1)* snow load on empty vessel

The snow load example below assumes that the detailed design of the top head has been done such that the snow load is transferred uniformly to the shell. The snow load on the top head is assumed to be a uniform external pressure on the cover. See para. 3A-320. All the example vessels are built of Type I or Type II laminates.

*(c) Seismic Loads*

*(1)* seismic load on flat-bottom vertical tank



Copyright ASME International
Provided by IHS under license with ASME
No reproduction or networking permitted without license from IHS
Not for Resale

## NM3-310 Loading Criteria

In the examples below, the load causes shear stress and normal stress in both axial and hoop directions, all simultaneously. In some cases, the normal stress is compressive, which, if excessive, could cause buckling. Therefore, biaxial strength and buckling criteria are needed to complete the examples.

*(a)* Paragraphs 3B-500 and M3-530 contain provisions, based on lamination analysis, for calculating the resistance of any type of laminate to biaxial stress; however, the calculations are complicated. For Type I laminates, a conservative approximation to these provisions is:

$$f_a^2 - f_a f_h + f_h^2 + 2.25 f_v^2 < (S_u/F)^2$$

For Type II laminates, a conservative approximation to paras. 3B-300 and M3-530 is:

$$f_a = |S_u/F| \text{ and } f_h = |S_u/F|$$

if the shear stress is less than 200 psi. These approximations are used in this Appendix instead of the more exact procedure in paras. 3B-300 and M3-530. According to para. 3B-500, the design factor $F = 10$ for operating loads, and $F = 10/1.2 = 8.33$ for wind, seismic, and snow loads, or for a combination of operation and wind, seismic, and snow loads.

*(b)* The interaction criterion for buckling is:

$$|f_a F/f_{cra}| + |f_b F/f_{crb}| + (f_v F/f_{crv})^2 < 1$$

This equation applies only to compressive normal stress. In all cases, the design factor $F = 5$ for buckling. The buckling criterion is the same as in Equation 9.93, page 1006, of the American Society of Civil Engineers' *Structural Plastics Design Manual,* ASCE Manuals and Reports on Engineering Practice No. 63, 1984.

## NM3-320 Design for Operating Loads

Case (a) is a vented tank with a flat-bottom head and a torispherical top head. The tank is constructed of Type II laminate, bolted to a concrete pad, 12 ft in diameter and 24 ft high, and contains a liquid with a specific gravity of 1.2. The tank is located outdoors in St. Louis, Missouri.

Paragraph 3A-210 requires a shell thickness given by:

$$t = FPD_i/2S_u$$
$$= (10)(24)(12)(0.03613)(1.2)(144)/(2)(15{,}000)$$
$$= 0.599 \text{ in.}$$

The laminate strength is from Table 2A-3, for Type II laminate. The next thickest standard Type II laminate is 0.64 in. thick (Table 2A-2). Thus, take $t = 0.64$ in. Assume that the shell tapers to 0.22 in. thick at the top, that the head is 0.29 in. thick, and that the flat bottom head is 0.37 in. thick. Then the shell weighs 3,500 lb, the top head weighs 319 lb, and the bottom weighs 340 lb, for a total vessel weight of 4,159 lb.

Case (b) is a vented tank 9 ft in diameter and 18 ft long from tangent line to tangent line. It has torispherical heads on both ends and it is supported by a ring 6 ft from the top of the shell. As in case (a), it is located outdoors in St. Louis, Missouri and contains a liquid with specific gravity = 1.2. The vessel is constructed of Type I laminate, which has $S_u = 9{,}000$ psi according to Table 2A-3. Paragraph 3A-230 requires that the bottom head have the following thickness:

$$t = 0.885\, FPR_c/S_u$$
$$= (10)(0.885)(18)(12)(0.03613)(1.2)(108)/9{,}000$$
$$= 0.995 \text{ in.}$$

(Use 1.00 in. nominal thickness, per Table 2A-2.) The top head thickness would be governed by the "footprint" load specified by para. 3A-340. Nonmandatory Appendix NM-11 gives a method for designing for this load, which in this case gives a thickness of 0.35 in. The shell thickness just above the ring is given by para. 3A-210:

$$t = FPD_i/2S_u$$
$$= (10)(6)(12)(0.03613)(1.2)(108)/(2)(9{,}000)$$
$$= 0.187 \text{ in.}$$

However, para. 3-200(f) and Table 2A-1, taken together, require that the thickness of the shell be at least 0.23 in. Similarly, the shell thickness 12 ft from the top is found from:

$$t = FPD_i/2S_u$$
$$= (10)(12)(12)(0.03613)(1.2)(108)/(2)(9{,}000)$$
$$= 0.375 \text{ in.}$$

or, rounding up to a standard laminate, $t = 0.40$ in. The shell thickness 18 ft from the top is found the same way:



Copyright ASME International
Provided by IHS under license with ASME
No reproduction or networking permitted without license from IHS
Not for Resale

$$t = FPD_i/2S_u$$
$$= (10)(18)(12)(0.03613)(1.2)(108)/(2)(9{,}000)$$
$$= 0.562 \text{ in.}$$

which rounds up to 0.57 in. The total weight of the liquid is found from:

$$\text{weight} = (3.1416)(4.5)^2(18)(62.4)(1.2) = 85{,}746 \text{ lb}$$

The vessel weighs approximately 2,000 lb; therefore, the axial stress resultant just below the ring is:

$$N_a = (85{,}746 + 2{,}000)/(3.1416)(108) = 259 \text{ lb/in.}$$

The thickness required to resist the axial load is given by para. 3A-210:

$$t = FN_a/S_u$$
$$= (10)(259)/(9{,}000) = 0.287 \text{ in.}$$

which is less than the thickness required to resist the hoop stress. Thus, hoop stress governs and $t = 0.57$ in.

**NM3-321 Example (a2): Empty Cantilevered Vessel Under Wind Load.** This is a continuation of case (a) in para. NM3-320; it is the same flat-bottom tank with wind loading. According to Uniform Building Code (UBC) rules, the wind pressure zone for St. Louis is 30. From UBC Table 23-F, the design wind pressure for zone 30 is 25 psf. The shape factor per Table 23-G is $SF = 0.8$. Then the wind load is:

$$U = (SF)qD = (0.8)(25)(12) = 240 \text{ lb/ft of height}$$

The bending moment at the base of the vessel is:

$$M_w = \tfrac{1}{2}UH^2$$
$$= (0.5)(240)(24)^2$$
$$= 69{,}120 \text{ ft-lb} = 829{,}440 \text{ in.-lb}$$

and the total lateral force is:

$$W = UH = (240)(24) = 5{,}760 \text{ lb}$$

The total vessel weight is 4,159 lb and the weight of the bottom is 340 lb; thus, the weight transmitted through the shell at the base is 4,159 – 340 = 3,819 lb. The axial stress at the base is then:

$$f_a = -3{,}819/(3.1416)(144)(0.64) = -13.2 \text{ psi}$$

where the negative sign denotes compression. The axial stress on the downwind side of the base resulting from the wind moment is given by:

$$f_b = -M_wC/I$$

The moment of inertia is calculated from:

$$I = (3.1416)(D_o^4 - D_i^4)/64$$
$$= (3.1416/64)(145.28^4 - 144^4)$$
$$= 760{,}525 \text{ in.}^4$$

and $C = 72.64$ in. Thus:

$$f_b = -(829{,}440)(72.64)/(760{,}525) = -79.2 \text{ psi}$$

The total axial stress is then $f_a + f_b = -92.4$ psi. The tank is built of Type II laminate, for which $S_u = 15{,}000$ psi. However, $F = 8.33$ and the allowable stress is 15,000/8.33 = 1,800 psi. The shear stress is:

$$f_v = 5{,}760/(3.1416)(144)(0.64) = 19.9 \text{ psi}$$

Since $f_v < 200$ psi, the criterion for Type II laminates stated in para. NM3-310 applies. It is:

$$|f_a + f_b| = 92.4 < 1{,}800 \text{ psi}$$

which satisfies para. NM3-310. Thus, the design is acceptable for wind load on the empty tank, as far as strength is concerned.

The tank must also be checked for elastic stability. The critical buckling stress for uniformly distributed axial compression is:

$$f_{cra} = 0.3Et/R$$
$$= (0.3)(1.5 \times 10^6)(0.64)/72$$
$$= 4{,}000 \text{ psi}$$

The critical stress for buckling from bending under the wind moment is:

$$f_{crb} = 1.3f_{cra} = 5{,}200 \text{ psi}$$

For shear, the critical buckling stress for thin-walled tube of circular cross section is given by:

$$f_{crv} = 0.695E(t/R)^{5/4}(R/H)^{1/2}$$
$$= 0.695(1.5 \times 10^6)(0.64/72)^{5/4}(72/288)^{1/2}$$
$$= 1{,}423 \text{ psi}$$



Copyright ASME International
Provided by IHS under license with ASME
No reproduction or networking permitted without license from IHS
Not for Resale

The buckling interaction equation from para. NM3-310 is:

$$|f_a F/f_{cra}| + |f_b F/f_{crb}| + (f_v F/f_{crv})^2 < 1$$

Inserting values for this example gives:

$$|(13.2)(5)/4{,}000| + |(79.2)(5)/5{,}200| + [(19.9)(5)/1{,}423]^2 = 0.098 < 1$$

which shows that the empty tank will not fail by buckling under the design wind load. If the strength and buckling conditions had not been satisfied, then the shell thickness would have to have been increased.

**NM3-322 Empty Ring Supported Vessel Under Wind Load.** This is a continuation of case (b) in para. NM3-320. As before, the wind pressure is 25 psf and the shape factor is 0.8. The wind load $U$ is:

$$U = (SF)qD = (0.8)(25)(9) = 180 \text{ lb/ft}$$

The total force above the ring is (180)(6) = 1,080 lb, and the corresponding bending moment is $\frac{1}{2}$ (1,080)(6) = 3,240 ft-lb. The total force below the ring is (180)(12) = 2,160 lb, and the corresponding moment is $\frac{1}{2}$(2,160)(12) = 12,960 ft-lb. This is the largest bending moment in the vessel. Thus, $M_w$ = 12,960 ft-lb = 155,520 in.-lb. Check the stress in the vessel just below the support ring.

*(a) Axial.* The weight of the shell below the support plus the weight of the bottom head is 1,300 lb. The axial stress from the weight is then:

$$f_a = (1{,}300)/(3.1416)(108)(0.40) = 9.58 \text{ psi}$$

*(b) Bending Below the Support:*

$$f_b = M_w C/I$$

$$I = (3.1416/64)(D_o^4 - D_i^4) = (3.1416/64)(108.8^4 - 108^4) = 200{,}084 \text{ in.}^4$$

$$C = 54.4 \text{ in.}$$

$$f_b = (155{,}520)(54.4)/200{,}084 = 42.3 \text{ psi}$$

*(c) Shear:*

$$f_v = 2{,}160/(3.1416)(108)(0.40) = 15.9 \text{ psi}$$

The strength criterion for Type I laminates is:

$$f_a^2 - f_a f_h + f_h^2 + 2.25 f_v^2 < (S_u/F)^2$$

The axial stress is the sum of the stresses from weight and bending: $f_a$ = 9.58 + 42.3 = 51.9 psi. The hoop stress $f_h$ vanishes and $f_v$ = 15.9 psi. We insert these values in the criterion:

$$(51.9)^2 + 2.25(15.9)^2 = 3{,}262 < (9{,}000/8.33)^2 = 1.17 \times 10^6$$

which is satisfied. The axial stress from the weight is tensile, and therefore does not enter into the check for buckling. The critical bending stress for buckling is:

$$f_{crb} = (1.3)(0.3)Et/R = (1.3)(0.3)(1.0 \times 10^6)(0.4)/54 = 2{,}889 \text{ psi}$$

The critical shear buckling stress is:

$$f_{crv} = 0.695E(t/R)^{5/4}(R/H)^{1/2} = (0.695)(1.0 \times 10^6)(0.40/54)^{5/4}(54/144)^{1/2} = 925 \text{ psi}$$

The buckling interaction formula is:

$$|f_a F/f_{cra}| + |f_b F/f_{crb}| + (f_v F/f_{crv})^2 < 1$$

With the current values in place:

$$|(5)(42.3)/2{,}889| + [(5)(15.9)/925]^2 = 0.081 < 1$$

which is satisfied.

Both strength and buckling criteria are fulfilled, and the design is acceptable for withstanding wind loads while the vessel is empty.

**NM3-323 Flat-Bottomed Vessel Under Operating Conditions and Wind Load.** The hoop stress due to hydrostatic pressure must be combined with the axial stress caused by wind and weight, using a design factor of $F$ = 10/1.2 = 8.33.



Copyright ASME International
Provided by IHS under license with ASME
No reproduction or networking permitted without license from IHS
Not for Resale

$$f_h = PR/t$$

where $P$ is the sum of hydrostatic and design pressures.

$$f_h = (24)(12)(0.03613)(1.2)(72)/0.64 = 1{,}405 \text{ psi}$$

From para. NM3-321, the bending stress is 79.2 psi, the axial weight stress is 13.2 psi, and thus the overall axial stress is 79.2 + 13.2 = 92.4 psi. The shear stress is 19.9 psi, which is less than 200 psi, so the simplified criterion for Type II laminates applies:

$$|f_a| = 92.4 < 15{,}000/8.33 = 1{,}800 \text{ psi}$$

$$|f_h| = 1{,}405 < 15{,}000/8.33 = 1{,}800 \text{ psi}$$

which are both acceptable.

**NM3-324 Ring Supported Vessel Under Operating Conditions and Wind Load.** In this case, the hoop stress and axial stresses caused by the hydrostatic load must be superposed on the weight and wind stresses computed in para. NM3-322. The governing location is just under the ring, and the hoop stress there is given by:

$$f_h = (6)(12)(0.03613)(1.2)(54)/0.40 = 421 \text{ psi}$$

Axial stresses are from the weight of the contents, the weight of the vessel, and the wind moment. The contents weight is $(3.1416)(4.5)^2(18)(62.4)(1.2) = 85{,}746$ lb. The weight of the vessel below the support is 1,300 lb. Then the axial stress from weight is:

$$f_a = (85{,}746 + 1{,}300)/(3.1416)(108)(0.40) = 641 \text{ psi}$$

The stress from the wind moment is 42.3 psi, and the total axial stress becomes 641 + 42.3 = 683.3 psi. From above, the shear stress is 15.9 psi. The strength criterion is:

$$f_a^2 - f_a f_h + f_h^2 + 2.25 f_c^2 < (S_u/F)^2$$

With the values from the example, this becomes:

$$(683.3)^2 - (683.3)(421) + (421)^2 + 2.25(15.9)^2 = 357{,}400$$

but $357{,}400 < (9{,}000/8.33)^2 = 1.17 \times 10^6$, and the strength is adequate.

**NM3-325 Snow Load on Top Head of Flat-Bottomed Example Vessel.** The vessel top head must be designed to support the snow load and transfer the load to the vessel shell. The snow load can be treated as a uniform external pressure applied to the top head. The design snow load in St. Louis is 25 psf. Thus, the weight of the snow on the 12 ft diameter head = $(3.1416)(6)^2(25) = 2{,}827$ lb. Taking the head weight as 275 lb, the combined weight equals 3,102 lb. The weight causes an axial stress in the shell:

$$f_a = 3{,}102/(3.1416)(144)(0.64) = 11 \text{ psi}$$

The allowable stress for strength is 15,000/8.33 = 1,800 psi, and the critical axial buckling stress was calculated in para. NM3-321 as 4,000 psi. Thus, the allowable stress to insure elastic stability is 4,000/5 = 800 psi. Both allowable stresses are much greater than 11 psi, the applied stress.

NOTE: If the vessel must withstand external pressure, the external pressure exerted by the snow must be added to the design external pressure for calculating the head thickness. Thus, if the vessel has a torispherical head, the head thickness is calculated by the equation in para. 3A-320 and the term $P_a$ is the sum of the design external pressure and the snow pressure. This combination of loads may govern, the "footprint" load requirements in para. 3A-340 may govern, or internal pressure may govern.

**NM3-326 Seismic Loading on Vessels.** A vessel experiencing a seismic event has its base accelerated both laterally and vertically by strong ground motion. The vessel shell, internals, and any contents respond dynamically to this base acceleration depending upon their mass distribution and natural frequency. The vessel and contents may be analyzed either as a dynamic system or statically with equivalent loading magnitude depending upon the seismic zone and importance factor.

Codes governing civil structures allow either method, but give specific rules for analysis as an equivalent static structure. In this approach, all the seismic mass is considered as "fixed" or moving in phase with the structure. Those codes that govern large fluid-filled tanks separate the contents into a "fixed" part that moves with the tank shell and the remainder, which is considered "sloshing" contents. The relative percentage of each depends upon the ratio of vessel diameter to contents height, with tall, slender tanks having more fixed contents than those that are lower and wider. Variations in process design, available space, and specialized internals lead to wide variations in aspect ratio as well as amount of fixed mass other than that of the fluid contents. For this reason, the discussion in



Copyright ASME International
Provided by IHS under license with ASME
No reproduction or networking permitted without license from IHS
Not for Resale

this section will present a hybrid static force method for the calculation of seismic load and moment. Fixed mass other than fluid contents is analyzed based upon Section 1628 of the 1994 Uniform Building Code (UBC), while the "fixed" and "sloshing" contents are analyzed using API 650 Appendix E.

(00) **NM3-327 Fixed Mass.** Total lateral shear due to fixed mass $V_{fm}$ depends upon seismic zone factor $Z$, importance factor $I$, natural period $T$, site soil profile factor $S$, factor $R_w$ defining the type of structural resistance to lateral load, and the total fixed mass $W_f$ including that of the contents.

$$V_{fm} = \frac{ZIC}{R_w} W_f$$

where

$$C = \text{min.}\left(\frac{1.25S}{T^{2/3}}, 2.75\right)$$

For thin shell vessels, the fundamental period may be estimated by considering the tank as a cantilever combined with the mass of the contents. Where only the bending rigidity is used, the fundamental period $T$ is given by

$$T, \text{ sec} = \frac{2\pi L^2}{3.52}\sqrt{\frac{w}{EIg}}$$

where

$E$ = axial modulus, psi
$g$ = acceleration due to gravity = 386.4 in./sec$^2$
$I$ = bending moment of inertia, in.$^4$
$L$ = vessel height, in.
$w$ = contents loading per unit length, lb/in.

A better approximation is obtained by considering the in-plane shear compliance, but this is usually not necessary.

The shear due to fixed mass $V_{fm}$ is redistributed into zones according to the mass distribution of the shell and fixed mass of the contents:

$$F(i) = V_{fm}\frac{w(i)\,h(i)}{\text{Sum}}$$

$$\text{Sum} = \sum_{i=1}^{n} w(i)\,h(i)$$

$$V_{fm} = \sum_{i=1}^{n} F(i)$$

where $w(i)$, $h(i)$, and $F(i)$ are the mass, position of the mass center, and lateral force associated with the $i$th zone. The base moment due to the fixed mass of the shell and contents is then

$$M_{fm} = \sum_{i=1}^{n} F(i)\,h(i)$$

and the fixed mass of the center of the contents and the center of gravity are obtained from Figs. NM3-1 and NM3-2 as a function of $D/H$, the aspect ratio of the contents.

**NM3-328 Sloshing Mass.** The mass of the sloshing contents $W_{sc}$ and its center of gravity $H_{sc}$ are also obtained from Figs. NM3-1 and NM3-2. The base shear $V_{sc}$ and base moment $M_{sc}$ due to sloshing contents are functions of the zone factor $Z$, importance factor $I$, natural period of the first sloshing mode $T_s$ from Fig. NM3-3, site amplification factor $S$, and the mass of contents which are sloshing: (00)

$$V_{sc} = ZIC_2W_{sc}$$

$$M_{sc} = V_{sc}H_{sc}$$

where

$$C_2 = \frac{0.3S}{T_s} \text{ for } T_s \le 4.5 \text{ sec}$$

and

$$C_2 = \frac{1.3S}{T_s^2} \text{ for } T_s > 4.5 \text{ sec}$$

Finally, the total base shear $V_b$ and moment $M_b$ are the sum of the components due to fixed and sloshing mass:

$$V_b = V_{fm} + V_{sc}$$

$$M_b = M_{fm} + M_{sc}$$

The hold-down force depends upon the base moment $M_b$, vessel radius $R$, weight supported above the base $w$, number of hold-down points $N$, and the external force $F_u$ due to either internal cover pressure or vacuum. Taking into consideration that the center of gravity of the bolt circle is not at the geometric center of the tank, the maximum hold-down force $F_b$ is calculated from the SPI/MTI quality assurance report:



Copyright ASME International
Provided by IHS under license with ASME
No reproduction or networking permitted without license from IHS
Not for Resale

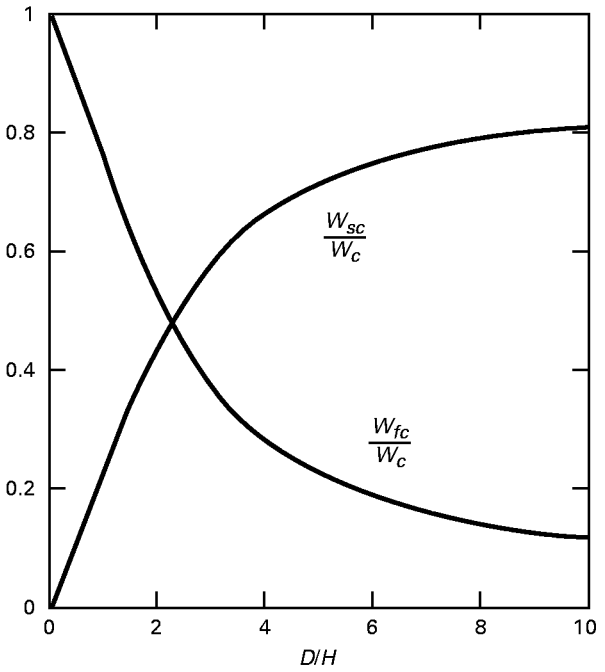


**FIG. NM3-1 MASS FRACTIONS FOR FIXED AND SLOSHING CONTENTS**

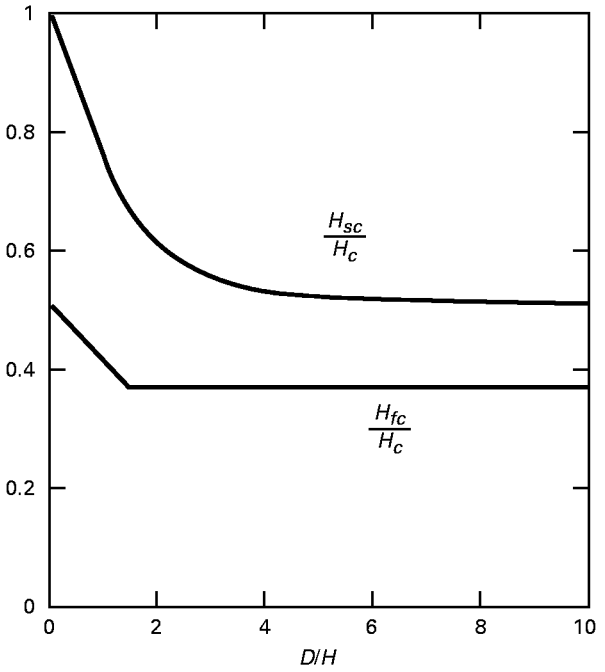


**FIG. NM3-2 CENTROIDAL DISTANCES FOR FIXED AND SLOSHING CONTENTS**



Copyright ASME International
Provided by IHS under license with ASME
No reproduction or networking permitted without license from IHS
Not for Resale

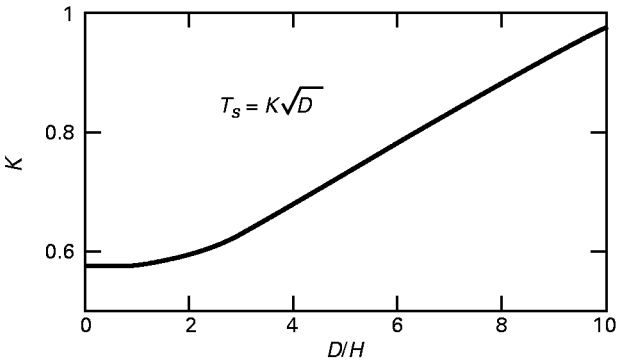


**FIG. NM3-3 SLOSHING PERIOD AS A FUNCTION OF *D* (ft) AND ASPECT RATIO *D/H***

$$F_b = \frac{1.695M_b - 1.46wR}{NR} + \frac{F_u}{N}$$

**(00) NM3-329 Seismic Example.** Given a 10 ft diameter by 12 ft high atmospheric tank with six hold-downs that is filled with a fluid having a specific gravity of 1.2. The tank is in seismic zone 2b and has an importance factor $I$ of 1.0 and a site amplification factor $S$ of 1.5. The tank wall is 0.29 in. thick hand lay-up and has an empty weight of 1,637 lb including a 230 lb fully supported flat bottom.

$$\text{Contents weight} = (0.785)(10)^2(12)(62.4)(1.2) = 70{,}537 \text{ lb}$$

$$D/H = \frac{10}{12} = 0.833$$

From Fig. NM3-1, the percentages of fixed and sloshing contents weights are 81.8% and 19.2%, respectively, with centers of gravity at 60.8 in. and 112 in. as obtained from Fig. NM3-2.

$$\text{Fixed weight} = (0.818)(70{,}537) + 1{,}637 = 59{,}336 \text{ lb}$$

$$\text{Sloshing weight} = (0.192)(70{,}537) = 13{,}543 \text{ lb}$$

Based upon the mass of the shell and fixed contents, the lowest natural period of the shell, including shear compliance, is estimated to be 0.15 sec. The fixed mass distribution of the tank shell is approximated by dividing it into six equal zones 24 in. high, each having a weight of 273 lb plus a fixed contents weight of 57,699 lb acting at 60.8 in. above the base.

$$C = \text{min.}\left[\frac{(1.25)(1.5)}{(0.15)^{0.666}}, 2.75\right]$$

$$Z = 0.2$$

$$I = 1.0$$

$$R_w = 4$$

$$W_f = 59{,}336$$

$$V_{fm} = ZI\frac{C}{R_w}W_f$$

$$\text{Sum} = (273)(12 + 36 + 60 + 84 + 108 + 132) + (57{,}699)(60.8)$$

$$F(1) = \frac{V_{fm}}{\text{Sum}}(273)(12)$$

$$F(2) = \frac{V_{fm}}{\text{Sum}}(273)(36)$$

$$F(3) = \frac{V_{fm}}{\text{Sum}}(273)(60)$$

$$F(4) = \frac{V_{fm}}{\text{Sum}}(273)(84)$$

$$F(5) = \frac{V_{fm}}{\text{Sum}}(273)(108)$$

$$F(6) = \frac{V_{fm}}{\text{Sum}}(273)(132)$$



Copyright ASME International
Provided by IHS under license with ASME
No reproduction or networking permitted without license from IHS Not for Resale

$$F(7) = \frac{V_{fm}}{\text{Sum}}(57{,}699)(60.8)$$

$$\sum_{i=1}^{7} F(i) = 8{,}159 \text{ lb}$$

$$M_{fm} = F(1)(12) + F(2)(36) + F(3)(60) + F(4)(84) + F(5)(108) + F(6)(132) + F(7)(60.8)$$

$$= 505{,}213 \text{ in.-lb}$$

$$V_{fm} = 8{,}159 \text{ lb}$$

The base shear for sloshing contents is evaluated for a sloshing period of 1.83 sec:

$$C_2 = \frac{(0.3)(1.5)}{1.83} = 0.246$$

$$V_{sc} = (0.2)(1.0)(0.246)(13{,}543) = 666 \text{ lb}$$

$$M_{sc} = (666)(112) = 74{,}592 \text{ in.-lb}$$

The total base shear and moment are:

$$V_b = 8{,}159 + 666 = 8{,}825 \text{ lb}$$

$$M_b = 505{,}213 + 74{,}592 = 579{,}805 \text{ in.-lb}$$

The maximum hold-down force is calculated for six hold-downs and a compressive force of 1,638 − 230 = 1,408 lb supported above the hold-downs, with the uplift force $F_u = 0$:

$$F_b = \frac{(1.695)(579{,}805) - (1.46)(1{,}408)(60)}{(6)(60)} = 2{,}387 \text{ lb}$$

The combined axial stresses at the vessel base are found to be low:

$$\sigma = \left(\frac{1}{\pi R^2 t}\right)(\pm M_b) + \frac{-w}{2\pi Rt}$$

$$= \left[\frac{1}{\pi(60)^2(0.29)}\right](\pm 579{,}805) + \frac{-1{,}408}{2\pi(60)(0.29)}$$

$$= 164 \text{ psi and } -190 \text{ psi}$$

Taking an effective value of 1,200,000 psi to calculate short-wave buckling stress on the compressive side,

$$\sigma_{\text{crit}} = \frac{0.3Et}{R} = \frac{(0.3)(1.2 \times 10^6)(0.29)}{60} = 1{,}740 \text{ psi}$$

The buckling safety factor is 1,740/190 = 9.2 and the average cross-sectional shear is:

$$\frac{V_b}{2\pi Rt} = \frac{8{,}825}{2\pi(60)(0.29)} = 80.7 \text{ psi}$$

Using the methods given in Kovalevski and Rish's "Structural Analysis of Shells," Sec. 10.3, the critical stress for shear buckling is given by:

$$\tau_{\text{crit}} = C_s \frac{Et}{R(Z_s)^{0.25}}$$

$$Z_s = \frac{L^2}{Rt} \text{ for } 100 < Z_s < 78\left(\frac{R}{t}\right)^2$$

where $L$ is the unstiffened shell length. The constant $C_s$ is a function of the parameter $R/t$ and its value is determined from Fig. NM3-4 in the range $R/t < 1{,}000$, which will cover most corrosion vessels. In this case, $C_s = 0.59$ with the critical stress and safety factor:

$$\tau_{\text{crit}} = \frac{(0.59)(1.2 \times 10^6)(0.29)}{(60)(1{,}192)^{0.25}} = 582 \text{ psi}$$

$$\text{safety factor} = \frac{582}{80.7} = 7.2 > 5$$

**NM3-330 Hold-Downs for Seismic Loading.** In addition to the stresses, it is necessary to evaluate the capacity of the hold-downs to handle both pullout and lateral shear. The design of various types of hold-downs for pullout is addressed in Appendix NM-4. Although the vessel designer does calculate the forces and stresses in the vessel hold-downs, it is typically the responsibility of a licensed civil or structural engineer to calculate the capacity of the hold-down embedments in the support slab. In many high seismic states, such as California, the civil or structural engineer must also be licensed in the state.

Most civil/structural engineers will not allow the vessel designer to use the friction between the bottom and the pad as part of the base shear capacity. This means that either the hold-downs must be designed to resist lateral shear or some auxiliary means must be provided. Where high shear exists, consideration may be given to grouting against a cast-in shear lip or a rolled angle attached to the pad, as long as care is



Copyright ASME International
Provided by IHS under license with ASME
No reproduction or networking permitted without license from IHS
Not for Resale

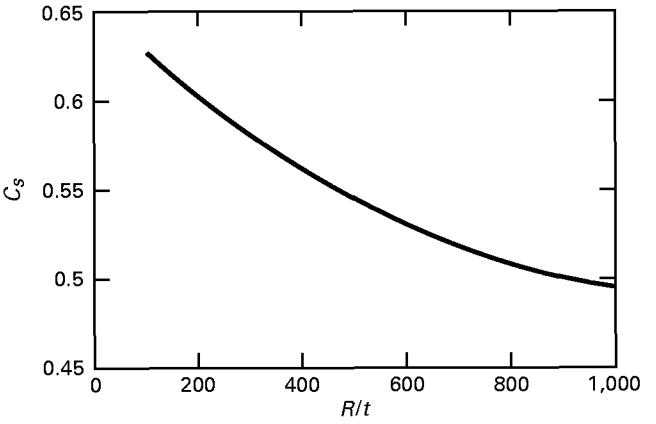


**FIG. NM3-4 SHEAR STRESS PARAMETER $C_s$**

taken to prevent any fluid retention which would present corrosion problems for the vessel bottom.

In high seismic zones such as southern California, local codes may require consideration of loads due to vertical as well as horizontal acceleration. In this case, the pad must be designed for the total compressive load due to upward acceleration. However, the hold-downs need not be designed to resist vertical loading due to fixed mass components which either cannot be accelerated downward or have limited downward acceleration due to base motion. Examples of this are fluid contents with enough cover space such that a sloshing wave cannot impinge on the vessel top, or packing that has no top constraint and therefore can only be accelerated downward by wall friction.

**NM3-331 Seismic Loading for Rigid Vessels.** UBC Section 1632 allows a more simplified analysis to be used for rigid vessels whose contents are fully supported at or below grade. This method is well suited for base-supported storage tanks, but would not be allowed for skirted vessels.

To qualify as a rigid vessel, the entire tank and contents mass $W$ must be considered and it must be shown that the lowest natural period $T$ is less than 0.06 sec. In this case, the lateral seismic force $V = 0.5ZIW$ and the base moment $M_b = VH$. Here $Z$ and $I$ are the seismic zone factor and importance factor, respectively, and $H$ is the distance of the combined center of gravity from the vessel base. The shear and moment calculated by this method will usually be less than that found using the methods given in the previous section. Hold-down force is calculated as outlined in the previous paragraphs.

Even though the vessel has qualified as a rigid vessel, the code allows the previous method to be used at the discretion of the vessel designer.



Copyright ASME International
Provided by IHS under license with ASME
No reproduction or networking permitted without license from IHS
Not for Resale

# NONMANDATORY APPENDIX NM-4
# HOLD-DOWN LUG DESIGN

## NM4-100 SCOPE

This Appendix provides methods for the design of lugs attached by hoop winding or secondary bonding. It is recommended that continuous loads be handled by lugs supported by metal bands or double rings as described in Appendix NM-5.

When wound-on lugs are used for intermittent or occasional loads, such as lift due to wind or minor ßooding, a design factor of 5 on the combined stress in the laminate is recommended. If wound-on lugs are used in continuous loading, such as for the support of vessels not exceeding 4 ft diameter or ßat bottom vessels subject to uplift loads due to internal pressure, the usual design factor of 10 should be applied to the combined stress in the laminate. Hold-down lugs used for anchoring vessels are subject to uplift loads due to internal pressure. Designers are cautioned that ßat tank bottoms as speciPed per para. 3A-260 are not sufPciently stiff to permit the use of the weight of the liquid contents of the tank to resist wind and/or seismic overturning forces. The hold-down system should be designed for the total base moment.

## NM4-200 NOMENCLATURE

$B.C.D.$ = bolt circle diameter, in.
$D$ = nominal vessel diameter, ft
$D_i$ = vessel inside diameter, in.
$D_o$ = vessel outside diameter, in.
$d$ = bar diameter, in.
$E_{ax}$ = axial tensile modulus of elasticity, psi
$E_{hp}$ = hoop tensile modulus of elasticity, psi
$e$ = load eccentricity, in. (see Figs. NM4-1, NM4-2A, and NM4-2B)
$F$ = total load or reaction at lug, lb
$F_H$ = force in horizontal direction (radial), lb
$G$ = wind pressure, psf
$H$ = height of vessel straight side, ft
$H_D$ = depth of top head, ft
$h$ = height of lug, in.
$h_{min}$ = minimum height of lug, in.
$h_1$ = height of wound overwrap or overlay, in.
$L$ = bar length, in.
$M_{ax}$ = moment in axial direction, in.-lb
$M_{hp}$ = moment in hoop direction, in.-lb
$M_L$ = moment coefPcient, dimensionless (see Fig. NM4-3)
$M_Q$ = bending moment due to wind load, ft-lb
$N$ = number of lugs
$P$ = total radial load due to moment, lb
$P^*$ = unit load, lb/in.
$P_G$ = wind uplift coefPcient, dimensionless (see Fig. NM4-4)
$p$ = pressure, psi
$R_m$ = mean radius of overwind, in.
$S_a$ = allowable tensile stress, divided by design factor 10, psi
$S_f$ = wind shape factor, dimensionless
= 0.7 for cylindrical vessels
$T$ = total overwind tension, lb
$t_b$ = thickness of vessel bottom, in.
$t_k$ = thickness of knuckle region, in.
= $t_w + t_b$ (Type A only)
$t_{lug}$ = lug thickness, in.
$t_w$ = thickness of vessel wall, in.
$t_1$ = thickness of wound overwrap or overlay, in.
$U_{net}$ = net uplift, lb
$W$ = total load, lb
$W_{max}$ = unit radial load on overwrap, lb/in.
$W_v$ = vessel weight, lb
$w$ = lug width, in.
$\beta$ = coefPcient of bending, in.$^{-1}$
$\nu$ = Poisson's ratio, dimensionless
$\sigma$ = tensile stress, psi
$\tau_w$ = shear stress across vessel wall, psi

## NM4-300 WOUND LUG DESIGN

This design analysis is based on the assumption that the lug is remote from either the top or bottom head of the vessel or any stiff support ring. This assumption results in a conservative analysis, since the full amount of local bending is presumed to occur. Typically, a major portion of the total stress in both the longitudinal and circumferential directions is due to this bending. In actuality, hold-down lugs are normally located in



Copyright ASME International
Provided by IHS under license with ASME
No reproduction or networking permitted without license from IHS
Not for Resale

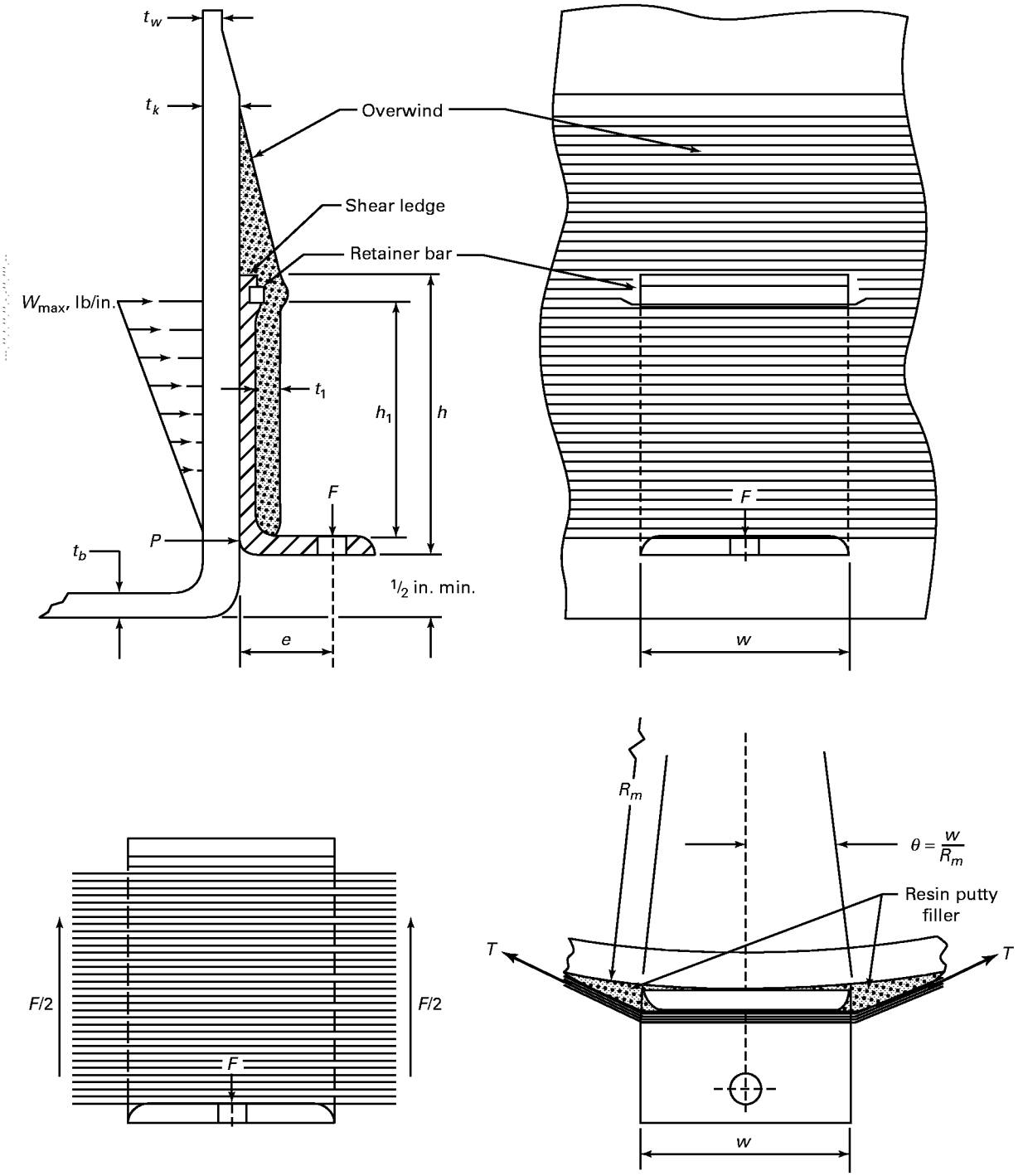


**FIG. NM4-1 WOUND-ON HOLD-DOWN LUG**



Copyright ASME International
Provided by IHS under license with ASME
No reproduction or networking permitted without license from IHS
Not for Resale

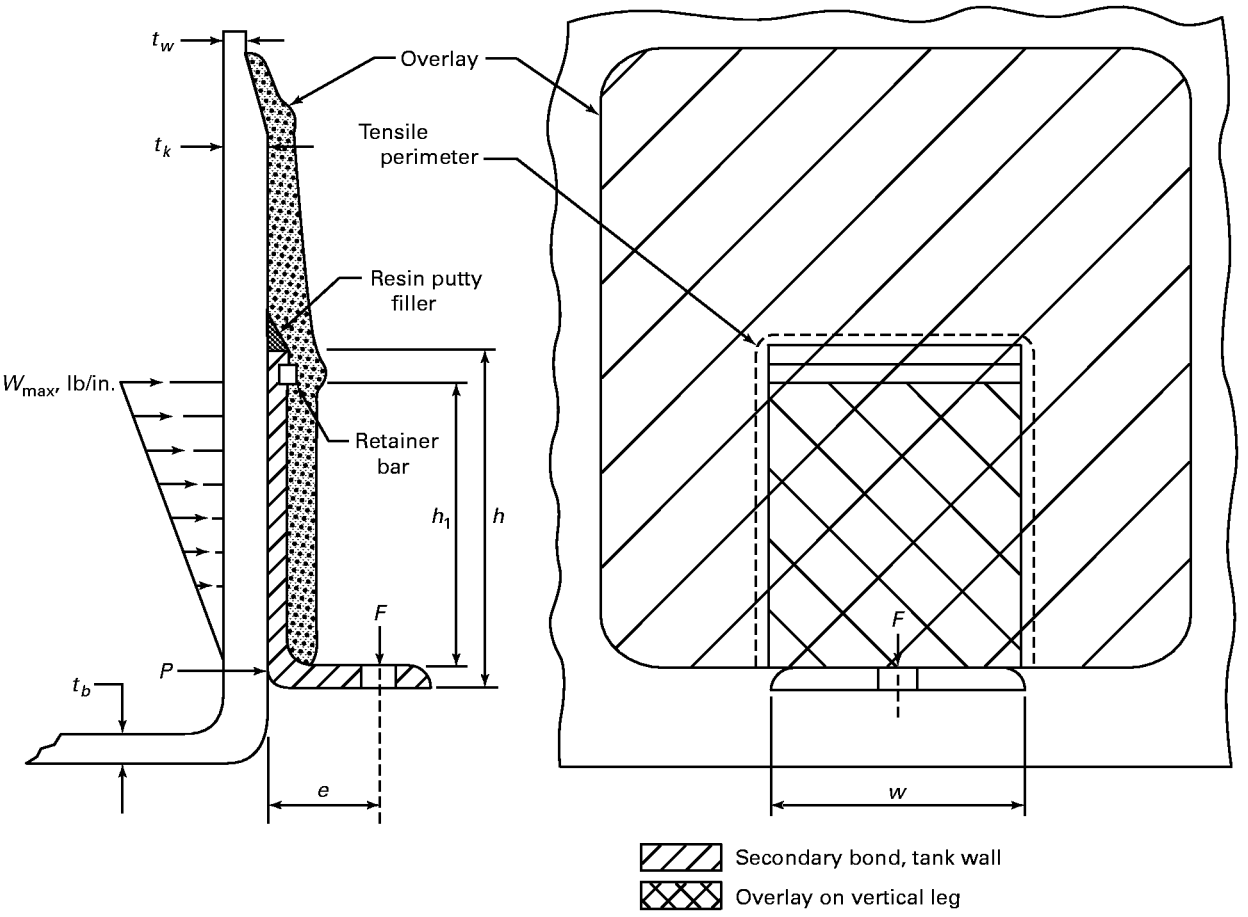


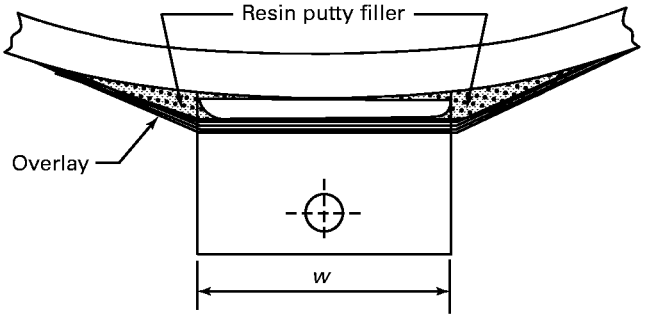


**FIG. NM4-2A SECONDARY BONDED HOLD-DOWN LUG, TYPE A**



Copyright ASME International
Provided by IHS under license with ASME
No reproduction or networking permitted without license from IHS
Not for Resale

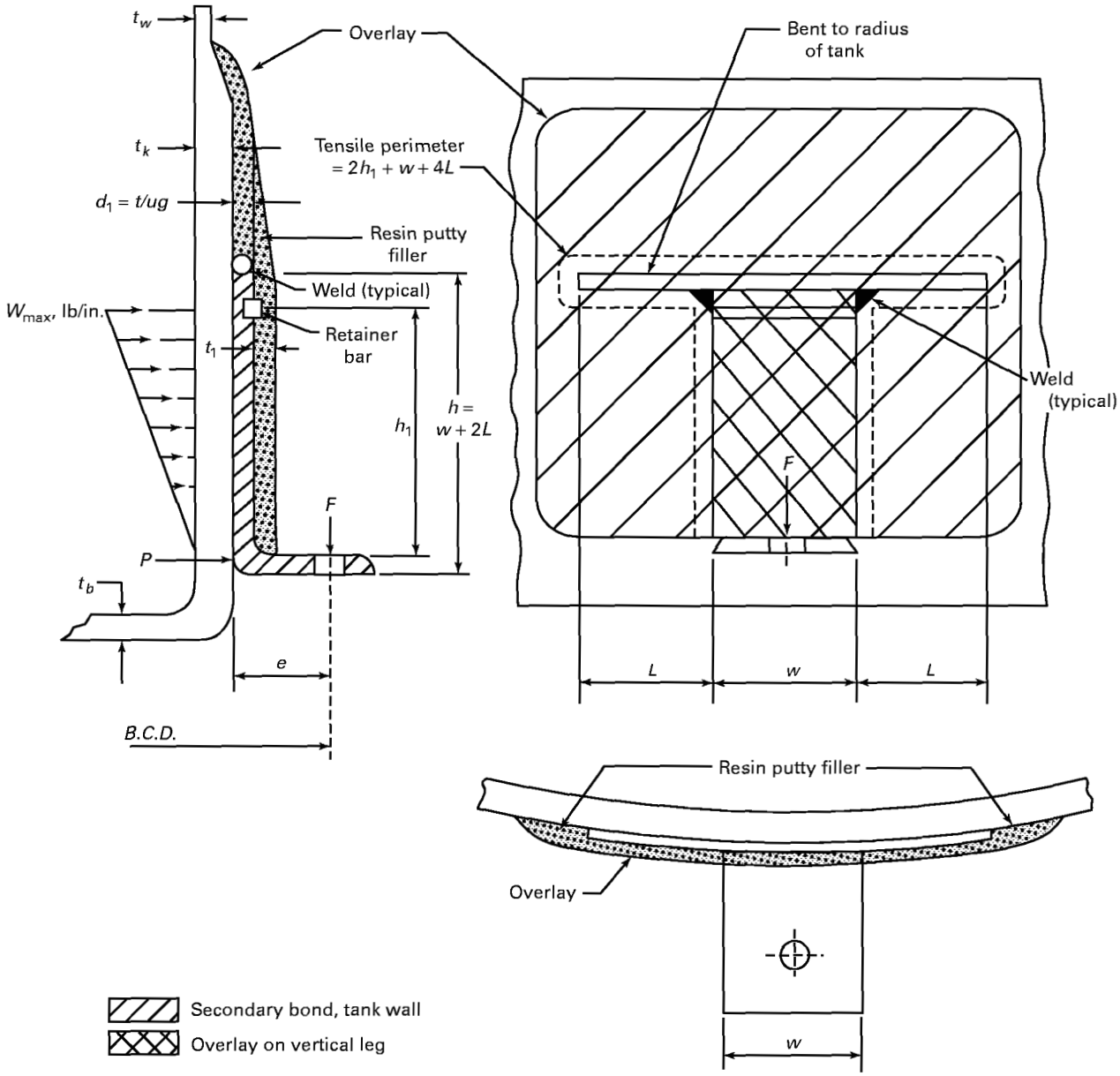


**FIG. NM4-2B SECONDARY BONDED HOLD-DOWN LUG, TYPE B**

the reinforced regions adjacent to the shell-to-bottom-head junction.

A typical wound lug geometry is shown in Fig. NM4-1. The vertical reaction $F$ is taken into a wound-in shear ledge or transferred into the vessel as shear in the overwind as shown. The lug itself must be checked for bending stress.

It is necessary to determine the lug force $F$ from known loading conditions and statics. Based upon an assumed overwind force distribution, the overwind tension $T$ and compressive heel reaction $P$ may be determined. The average tensile stress in the overwind and shear in the vessel wall are then calculated. The necessary parameters are given in Figs. NM4-1 and NM4-5.

The next step is to determine the combined state of stress in the vessel wall due to the local load $P$ and vessel operating pressure. This is done by first calculating the average radial loading on the shell due to the lug width



Copyright ASME International
Provided by IHS under license with ASME
No reproduction or networking permitted without license from IHS
Not for Resale

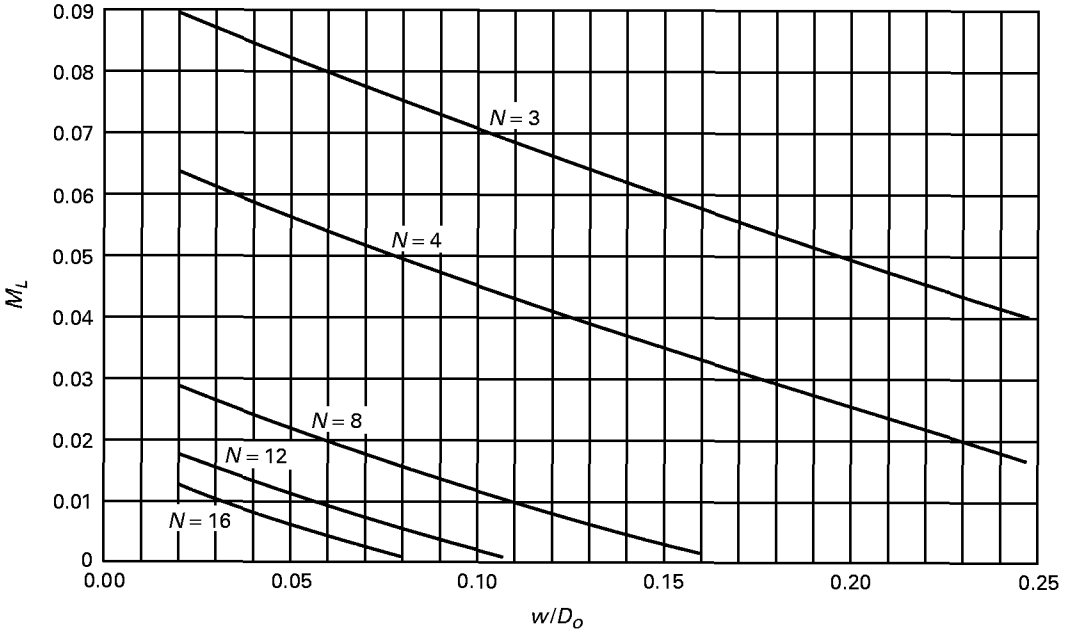


$$M_L = \frac{1}{2}\left[\frac{N}{2}\left(\frac{\cos\theta + \theta\sin\theta}{\pi}\right) - \left(\frac{\sin\theta}{2}\right) - \left(\frac{1}{2}\cot\frac{\pi}{N}\right)\right]$$

$N$ = number of lugs

$\theta$ = angle of $w/D_o$ expressed in radians

(00) **FIG. NM4-3 MOMENT COEFFICIENT $M_L$**

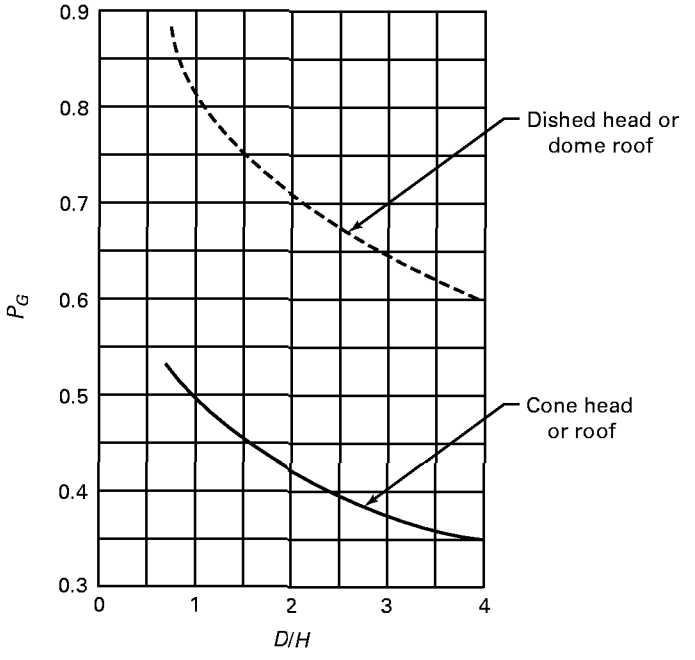


(00) **FIG. NM4-4 UPLIFT COEFFICIENT $P_G$**



Copyright ASME International
Provided by IHS under license with ASME
No reproduction or networking permitted without license from IHS
Not for Resale

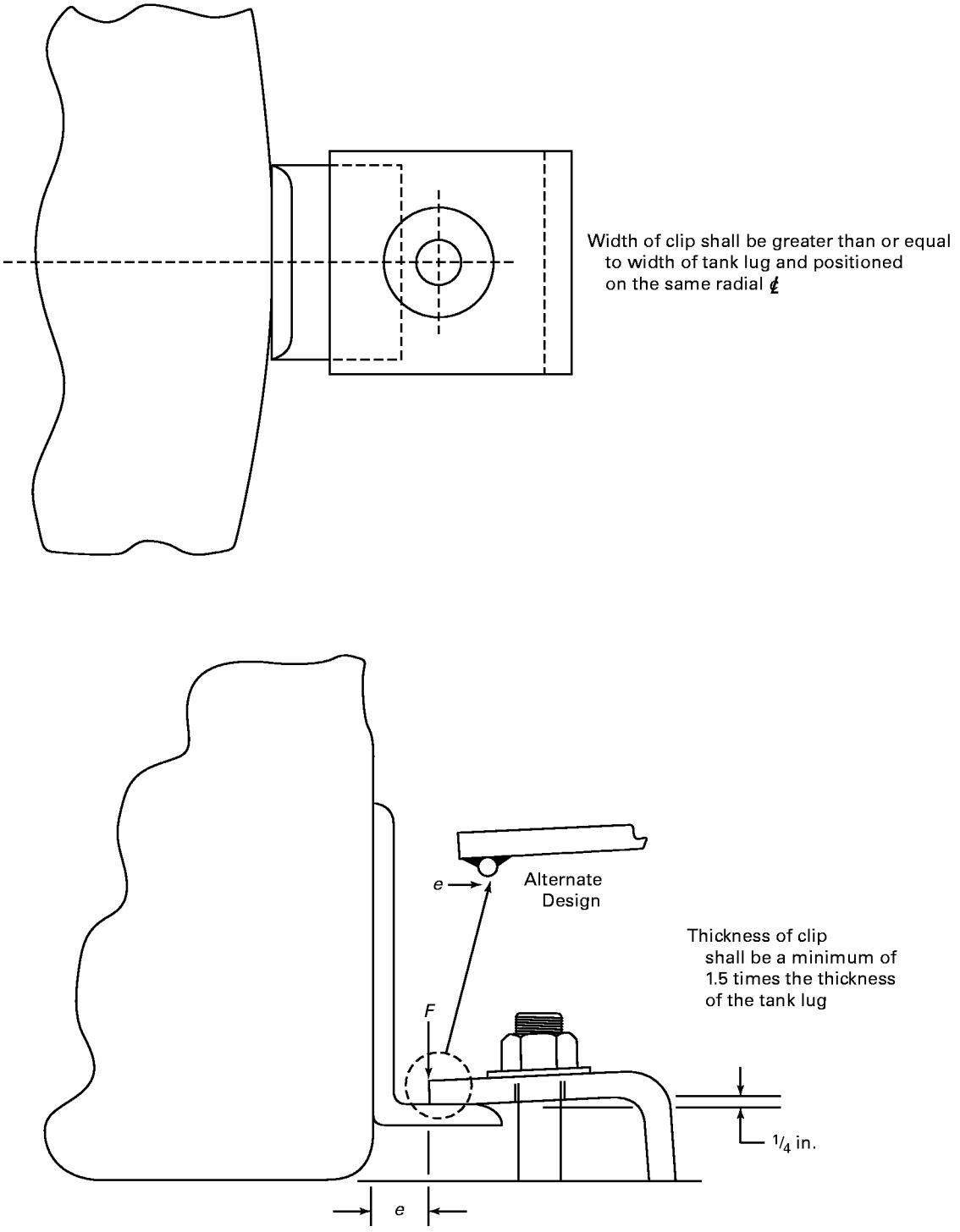


**FIG. NM4-5 RECOMMENDED HOLD-DOWN CLIP**



Copyright ASME International
Provided by IHS under license with ASME
No reproduction or networking permitted without license from IHS
Not for Resale

$w$ and then evaluating the longitudinal bending moment that would be present in a similar shell under a ring load of the same intensity. The bending stresses due to this moment are then added to the membrane stress due to the vessel operating pressure to obtain the peak values of axial stress at the inner and outer surfaces of the vessel wall. The corresponding hoop stress in the wall is obtained by assuming that circular bending is occurring locally. The bending moment in the hoop direction is equal to the appropriate Poisson's ratio times the bending moment in the longitudinal direction. The stresses due to this bending are then added to the hoop stress due to the operating pressure to obtain the peak values of hoop stress at the inner and outer surfaces of the vessel wall.

A more exact determination of the local effects is given in the work of Bijlaard as summarized in Welding Research Council Bulletin WRC-107 or its earlier version given in the Department of Commerce Report PB151987 on local loading in thin shells. However, the approximate analysis given above accounts conservatively for the effects present.

## NM4-400 SECONDARY BONDED LUG DESIGN

Lugs may be attached by means of secondary bonding. It is recommended that such attachments be designed for shear loading on the basis of a 200 psi allowable shear strength in the secondary bond. Secondary bonded attachments should not be designed for straight tensile loads. Such loading tends to peel off the overlaid reinforcement. It is recommended that radial loads, such as those resulting from eccentric moments, not exceed 50 lb per lineal inch tension. If tensile perimeter load is higher than 50 lb/in., in this case we have the option to use Type B lugs. These loads are normal to the overlay along that portion of the perimeter of the lug or clip that is actually subjected to tensile loading. See Figs. NM4-2A, NM4-2B, and NM4-5.

Lugs are eccentrically loaded, resulting in a localized moment applied to the vessel shell. The minimum height of the lug shall be calculated based on the following:

$$h_{min} = \left[\frac{6D_o WeM_L}{NS_a t_k^2}\right]^{1/2} \quad (1)$$

The lug must then be checked for shear. The minimum required overlay area of secondary bond shall be:

$$A_r = W/200N$$

where $A_r$ is the minimum required area, in square inches, of secondary bond overlay attached to the lug or the shell. If the size of the lug must be increased significantly to provide sufficient height to reduce the moment reaction or provide adequate area for the attachment of secondary bonding overlays, then additional lugs or a different type lug and attachment should be considered. Lug reactions:

$$M_A = 0$$

$$Fe - \left(\frac{W_{max}h}{2}\right)\left(\frac{2h}{3}\right) = 0$$

$$W_{max} = \frac{3Fe}{h^2}, \text{ lb/in.}$$

$$F_H = 0$$

$$P = \frac{W_{max}h}{2}, \text{ lb}$$

Overwind tension:

$$T = PR_m/w, \text{ lb}$$

$$R_m = \frac{D_i + 2t_k}{2}$$

$$\sigma = T/h_1 t_1, \text{ psi}$$

Shear across vessel wall:

$$\tau_w = P/t_k w, \text{ psi}$$

Local bending in vessel wall:

$$\beta = \left[\frac{3(1 - \nu^2)}{R_m^2 t_k^2}\right]^{1/4}$$

Assuming $\nu = 0.3$:

$$\beta = 1.28/(R_m t_k)^{1/2}, \text{ in.}^{-1}$$

$$P^* = P/w, \text{ lb/in.}$$

Bending moments due to lug:



Copyright ASME International
Provided by IHS under license with ASME
No reproduction or networking permitted without license from IHS
Not for Resale

$$M_{ax} = P^*/4\beta, \text{ in.-lb/in.}$$

$$M_{hp} \cong \nu M_{ax}, \text{ in.-lb/in.}$$

Loads due to pressure $p$:

$$N_{ax} = pR_m/2, \text{ lb/in.}$$

$$N_{hp} = pR_m, \text{ lb/in.}$$

Combined stresses:

$$\sigma_{ax} = N_{ax}/t_k \pm 6M_{ax}/t_k^2$$

$$\sigma_{hp} = N_{hp}/t_k \pm 6M_{hp}/t_k^2$$

Allowable stresses for intermittent loading:
$\sigma_{ax}$ = 0.002 × axial tensile modulus
$\sigma_{hp}$ = 0.002 × hoop tensile modulus

For continuous loading:
$\sigma_{ax}$ = 0.001 × axial tensile modulus
$\sigma_{hp}$ = 0.001 × hoop tensile modulus

## NM4-500 EXAMPLES

### NM4-510 Wound Lug Example

12 ft × 24 ft straight height
specific gravity 1.2
hydro head = (24)(0.433)(1.2) = 12.5 psig
Lower course:

$$t_w = PD_i/2S_a = (12.5)(144)/(2)(1,500) = 0.60 \text{ in.}$$

Use 0.64 in. nominal.
$t_b$ = 0.37 in.
$t_k$ = 0.64 + 0.37 = 1.01; use 1.00 in.

Approximate vessel weight:
top head = 275 lb
shell = 3,500 lb
bottom = 340 lb
total vessel = 4,115 lb

Calculate wind uplift on roof of vessel:

$$U = A_t(P_G G)$$

where
$A_t$ = plan area of vessel top, sq ft
$G$ = wind pressure = 25 psf
$P_G$ = uplift coefficient
$U$ = $(\pi/4)(D^2)(0.88)(25)$ = 2,488 lb uplift

Calculate the wind overturning moment:

$$\begin{aligned} M_Q &= 0.5S_f GDH^2 + 0.25GDH_D(H + H_D/3) \\ &= (0.5)(0.7)(25)(12)(24)^2 \\ &\quad + (0.25)(25)(12)(2)(24 + {}^2/_3) \\ &= 60,480 + 3,700 \\ &= 64,180 \text{ ft-lb} \end{aligned}$$

Net uplift is:

$$\begin{aligned} U_{net} &= U - W + 4M_Q/D \\ &= 2,488 - 4,115 + (4)(64,180)/12 = 19,766 \text{ lb} \end{aligned}$$

Assume eight lugs. Then load per lug is:

$$F = 19,766/8 = 2,471 \text{ lb/lug}$$

Assume lug configuration. Assume a 12 in. high angle with a 4 in. projection and 6 in. width. Assume the load eccentricity $e$ = $2^1/_2$ in. from the vessel wall to the centerline of the anchor bolt or to the point of load application by a hold-down clip.

The lug must be checked for simple bending, which will establish its minimum thickness:
$M$ = bending moment
= $Fe$ = (2,471)(2.5) = 6,177.5 in.-lb
$M/Z$ = bending stress
$S$ = allowable bending = 20,000 psi
$Z$ = section modulus = $bd^2/6$ = $wt_{lug}^2/6$
$w$ = 6 in.
$Z_{min}$ = minimum required section modulus
= $M/S$ = 6,177.5/20,000 = 0.309 in.$^3$
$t_{lug}$ = $(6Z_{min}/w)^{1/2}$ = $[(6)(0.309)/6]^{1/2}$ = 0.55 in.
Use $^5/_8$ in. thick lug.

Unit radial load on overwrap:

$$\begin{aligned} W_{max} &= 3Fe/h^2 \\ &= 3(2,471)(2.5)/(12)^2 = 129 \text{ lb/in.} \end{aligned}$$

Radial load due to moment:

$$\begin{aligned} P &= W_{max}h/2 \\ &= (129)(12)/2 = 774 \text{ lb} \end{aligned}$$

Hoop overwind load:



Copyright ASME International
Provided by IHS under license with ASME
No reproduction or networking permitted without license from IHS
Not for Resale

$$T_{tot} = PR_m/w$$
$$= (774)(72)/6 = 9{,}288 \text{ lb}$$

Assume overwrap thickness $t_1 = 0.38$ in. Hoop overwind tensile stress is:

$$\sigma = T/h_1t_1 = 9{,}288/(11)(0.38) = 2{,}222 \text{ psi}$$
$$< 40{,}000/5 = 8{,}000 \text{ psi allowable (OK)}$$

Shear across vessel wall:

$$\tau_w = P/t_kw = 774/(1.00)(6) = 129 \text{ psi}$$
$$< 3{,}000/2 = 1{,}500 \text{ psi allowable (OK)}$$

Coefficient of bending in the vessel wall:

$$\beta = 1.28/(R_mt_k)^{1/2} = 1.28/[(72)(1.00)]^{1/2} = 0.151 \text{ in.}^{-1}$$

Unit radial loading is:

$$P^* = P/w = 774/6 = 129 \text{ lb/in.}$$

Axial and hoop bending loads:

$$M_{ax} = P^*/4\beta = 129/(4)(0.151) = 213.6 \text{ in.-lb/in.}$$

$$M_{hp} \cong \nu M_{ax} = (0.3)(213.6) = 64 \text{ in.-lb/in.}$$

Axial load due to pressure:

$$N_{ax} = pR_m/2$$

However, $p = 0$ for no pressure above the liquid (atmospheric vessel). Therefore, $N_{ax} = 0$.

Hoop load due to pressure:

$$N_{hp} = pR_m$$

where

$p = 12.5$ psig hydrostatic (hoop direction)

$$N_{hp} = (12.5)(72) = 900 \text{ lb/in.}$$

Axial and hoop stresses:

$$\sigma_{ax} = N_{ax}/t_k + 6M_{ax}/t_k^2$$
$$= 0 + (6)(213.6)/(100)^2 = 1{,}281.6 \text{ psi}$$

$$\sigma_{hp} = N_{hp}/t_k + 6M_{hp}/t_k^2$$
$$= 900/1.00 + (6)(64)/(1.00)^2 = 1{,}284 \text{ psi}$$

## NM4-520 Secondary Bonded Lug Example

Using the same example problem as in para. NM4-510, assume we elect to use a lug attached by secondary bonding.

We again assume eight lugs with an uplift load of 2,471 lb/lug × 8 = 19,768 lb total.

Assume the same lug geometry as before and check the required minimum lug height. Lug width to vessel diameter ratio $w/D_o = 6/145.6 = 0.041$. From Fig. NM4-3, assuming eight lugs, $M_L = 0.024$.

$$h = \left[\frac{6D_oWeM_L}{NS_at_k^2}\right]^{1/2}$$
$$= \left[\frac{(6)(145.6)(19{,}768)(2.5)(0.024)}{(8)(1{,}500)(1.0)^2}\right]^{1/2}$$
$$= 9.28 \text{ in. (min.)}$$

For simplicity and to permit comparison, again use 12 in. high lug, 6 in. wide.

As before, check the lug for simple bending to establish its minimum thickness.

Unit radial load on overwrap:

$$W_{max} = 3Fe/h^2 = (3)(2{,}471)(2.5)/(12)^2 = 129 \text{ lb/in.}$$

Total radial load due to lug moment:

$$P = W_{max}h/2 = (129)(12)/2 = 774 \text{ lb}$$

Next calculate the tensile perimeter:

$$2h_1 + w = (2)(11) + 6 = 28 \text{ in.}$$

The tensile perimeter load = $P$/tensile perimeter = 774/28 = 27.6 lb/in. < 50 lb/in.

The minimum required area of secondary RTP bond overlay on the vessel wall, or the area of overlay on the upstanding leg of the lug below the retainer bar required for shear, shall be not less than:

$$A_R = W/200N = 19{,}768/(200)(8) = 12.4 \text{ in.}^2\text{/lug}$$

Proceeding as before, the overlay hoop load is:

$$T_{tot} = PR_m/w = (774)(72)/6 = 9{,}288 \text{ lb}$$

The overlay hoop tensile stress, assuming overlay thickness $t_1 = 0.38$ in., is:



Copyright ASME International
Provided by IHS under license with ASME
No reproduction or networking permitted without license from IHS

Not for Resale

$$\sigma = T_{tot}/h_1 t_1 = 9{,}288/(11)(0.38) = 2{,}222 \text{ psi} < 3{,}000 \text{ psi}$$

Shear across vessel wall:

$$\tau_w = P/t_k w = 774/(1.0)(6) = 129 \text{ psi}$$

Coefficient of bending in vessel wall:

$$\beta = 1.28/(R_m t_k)^{1/2} = 128/[(72)(1.0)]^{1/2} = 0.151 \text{ in.}^{-1}$$

Unit radial loading:

$$p^* = P/w = 774/6 = 129 \text{ lb/in.}$$

Bending loads:

$$M_{ax} = P^*/4\beta = 129/(4)(0.151) = 213.6 \text{ in.-lb/in.}$$

$$M_{hp} \cong \nu M_{ax} = (0.3)(213.6) = 64 \text{ in.-lb/in.}$$

Since the overlay is not a full circumferential winding, all stresses due to internal pressure and/or hydrostatic head are presumed to be taken by the vessel shell itself. Thus, the bending stresses in the overwrap are due only to the bending loads introduced by the lug.

Bending stresses:

$$\sigma_{ax} = 6M_{ax}/t_1^2 = (6)(213.6)/(0.38)^2 = 8{,}875 \text{ psi}$$

$$\sigma_{hp} = 6M_{hp}/t_1^2 = (6)(64)/(0.38)^2 = 2{,}659 \text{ psi}$$

Since these stresses are much too high, the thickness of the overwrap must be increased. Try 1.0 in.

$$\sigma_{ax} = 6M_{ax}/t_1^2 = (6)(213.6)/(1.0)^2 = 1{,}281.6 \text{ psi}$$

$$\sigma_{hp} = 6M_{hp}/t_1^2 = (6)(64)/(1.0)^2 = 384 \text{ psi}$$

If we set a stress limit of $S_a$ for loads due to uplift, we can solve directly for the overlay thickness $t_1$. Use the greater of

$$t_{1\min} = \sqrt{6M_{ax}/S_a}$$

or

$$t_{1\min} = \sqrt{6M_{hp}/S_a}$$

It can thus be seen that the required overlay thickness is approximately equal to the vessel wall at the bottom knuckle region. The use of more hold-down lugs would reduce the load per lug. This may not be cost effective, however, since more anchor bolts are required.



Copyright ASME International
Provided by IHS under license with ASME
No reproduction or networking permitted without license from IHS
Not for Resale

# NONMANDATORY APPENDIX NM-5
# RING SUPPORT OF VESSELS

## NM5-100 SCOPE

This Appendix provides methods for the design and checking of metallic support rings for vertical vessels. It is recommended that continuous loads be handled by metallic bands or double rings. These procedures cover lugs attached to thin bands and double rings.

The band is proportioned to fully resist the bending moments applied by the support lugs. No credit is taken for the buckling strength of the RTP shell, a conservative assumption.

## NM5-200 BAND WITH LUGS

The thin band design utilizes a band height that is two times the height of the lug for dissipation of the stresses induced by the reaction of the lug. See Fig. NM5-2.

## NM5-210 Nomenclature

$b$ = spacing between lug gussets, in.
$D$ = outside diameter of vessel, in.
$d$ = lug projection, in.
$E$ = load eccentricity, in.
$h_L$ = height of lug, in.
$M_L$ = moment coefficient at lug, dimensionless (see Fig. NM5-4)
$N$ = number of lugs
$S$ = allowable stress of band, psi[1]
$S_{ae}$ = allowable stress of lug, psi[1]
$S_r$ = allowable stress of rings or section, psi[1]
$S_y$ = yield stress of ring, psi[1]
$t_b$ = thickness of band, in. (1/4 in. minimum)
$t_c$ = thickness of shear collar, in.
$t_g$ = thickness of lug gusset or bearing plate, in.
$W$ = maximum supported vessel weight, lb (larger of operating or hydrotest weight)
$Z_r$ = required section modulus of radial rings, in.[3]

[1] All stress values per ASME Boiler and Pressure Vessel Code, Section II, Part D.

## NM5-220 Design Procedure

Assume a band thickness. The following band thicknesses are recommended as a starting point (based on specific gravity of 1.0). Vessels with a height-to-diameter ratio greater than 1.25 will require a band thickness greater than the following:

| Diameter, in. | Band Thickness, in. |
|---|---|
| Less than 48 | 1/4 |
| 49 to 60 | 3/8 |
| 61 to 84 | 1/2 |
| 85 to 96 | 5/8 |
| 97 to 120 | 3/4 |

Determine the required height of the lug based on the following:

$$h_L = \left[\frac{6DWEM_L}{SNt_b^2}\right]^{1/2} \quad (1)$$

If the lug height becomes unreasonable, e.g., greater than about 12 in. high, or the required band thickness becomes excessive, a double ring or rolled structural channel should be considered. See para. NM5-300.

## NM5-230 Split-Ring Flanges

Bands may be split and flanged for ease of assembly around the vessel, or where corrosion of support elements may require their replacement. End flanges at the split must be bolted face to face without inducing stress in the FRP shell. Flanges must be designed to develop the full structural capacity of the ring. See para. NM5-500 and Fig. NM5-7.

## NM5-240 Thickness of Gussets and Baseplate

The required minimum thicknesses of the gussets and baseplate shall be not less than the larger of the following.

Shear:

$$t_g = 0.625W/h_L S_{ae} N \quad (2)$$



Copyright ASME International
Provided by IHS under license with ASME
No reproduction or networking permitted without license from IHS
Not for Resale

Bending:

$$t_g = 2WE/NS_{ae}h_L^2 \quad (3)$$

Compression:

$$t_g = 0.5W/dS_{ae}N \quad (4)$$

Lateral stability:

$$t_g = d/16 \quad (5)$$

$t_g$ shall be a minimum of $\frac{1}{4}$ in., excluding corrosion allowance.

The minimum leg size of the continuous fillet welds attaching the gussets and base to the band shall equal $1.4t_g$.

## NM5-250 Shear Collar

Shear collar height shown in Fig. NM5-2 is minimum. Actual shear and compressive stresses shall be calculated. Shear collar heights and thicknesses shall be compared to minimums shown and increased as necessary.

## NM5-300 DOUBLE-RING SUPPORT

Double-ring supports are a method of providing supports of reasonable proportions where the loads and/or lug eccentricities are large. The support is comprised of a channel fabricated of two continuous rings or a rolled structural channel (see Fig. NM5-3). This support ring is proportioned to resist all bending and torsional loads without introducing any significant local loads into the FRP shell.

This paragraph provides a method for checking the stress in a support ring of a vertical vessel. The procedure is limited to thin ring beams with three or more evenly spaced lugs. Thin rings are those whose thickness in the radial direction is less than one-tenth their radius.

Double rings support the vessel by means of a shear collar.

## NM5-310 Nomenclature

$b$ = spacing between lug gussets, in.
$D$ = outside diameter of vessel, in.
$d$ = radial projection of ring or channel from web or band, in.
$E$ = load eccentricity from centerline web to centerline anchor bolt, in.
$e$ = eccentricity of support reaction force, in. (see Fig. NM5-3)
$e^*$ = location of center of torsional shear from centerline of web or band, in.
$h$ = height of ring section, in.
$h_b$ = height of band, in.
= $h + 1$
$I$ = moment of inertia of ring section about a centroid axis in the plane of the ring, in.$^4$
$J$ = torsional stiffness constant of ring section, in.$^4$
$M_b$ = bending moment at a section of ring, in.-lb
$M_L$ = moment coefficient at lugs, dimensionless
$M_t$ = twisting moment at a section of ring, in.-lb
$N$ = number of lugs
$R$ = inside radius of double-ring support, in.
$S_r$ = allowable stress of ring or section, psi[2]
$t_b$ = thickness of band, in. ($\frac{1}{4}$ in. minimum)
$t_c$ = thickness of shear collar, in.
$t_g$ = thickness of gusset, in.
$t_r$ = thickness of ring, in.
$t_w$ = thickness of web, in.
$W$ = total load supported by ring, lb
$Z_b$ = bending section modulus, in.$^3$
$Z_r$ = required section modulus of each ring, in.$^3$
$Z_t$ = torsional section modulus, in.$^3$
$\alpha$ = angle defined in Fig. NM5-5, rad
$\bar{\sigma}$ = normalized stress, dimensionless
$\sigma_b$ = bending stress, psi
$\sigma_{vm}$ = Von-Mises stress defined below, psi
$\tau$ = torsional stress, psi
$\phi$ = angle defined in Fig. NM5-5, rad

## NM5-320 Design Procedure for Double Rings on a Band

A double-ring support may be fabricated by adding two rings to a steel band. The vessel is supported by a shear collar, in this case bearing on the top of the steel support band. See Fig. NM5-3, sketch (a).

*Step 1.* Assume a desired ring height and gusset spacing. Since the vessel diameter, support eccentricity, weight, and desired number of support points are known, an approximate section modulus for the ring can be calculated:

$$Z_r = \frac{DWeM_L}{NhS_r} \quad (6)$$

This is the estimated minimum section modulus for each of two rings mounted on a steel band. The resulting double ring



Copyright ASME International
Provided by IHS under license with ASME
No reproduction or networking permitted without license from IHS
Not for Resale

must be checked for bending and torsional stresses as follows.

*Step 2.* Determine the location of the center of shear $e^*$. This must be added to the projection of the lug $E$ from the centerline of the bolt hole to the centerline of the web to obtain the total eccentricity $e$ for the double-ring support.

For double rings on a band [see Fig. NM5-3, sketch (a)]:

$$e^* = \frac{d^2(h - t_r)^2 t_r}{4I} \tag{7}$$

$$e = e^* + E$$

*Step 3.* Determine the ratio $e/R$.

*Step 4.* Calculate $Z_b$. For double rings on a band [see Fig. NM5-3, sketch (a)]:

$$Z_b = \frac{t_b(h_b^3) + d[h^3 - (h - 2t_r)^3]}{6h_b} \tag{8}$$

*Step 5.* For double rings on a band per Fig. NM5-3, sketch (a):

$$J = \frac{t_r^3(2d)}{3} + \frac{t_b^3(h_b)}{3} \tag{9}$$

*Step 6.* Calculate $Z_t$:

$$Z_t = J/t_b$$

*Step 7.* Calculate the ratio $Z_b/Z_t$.

*Step 8.* Use Figs. NM5-8, NM5-9, and NM5-10 for the applicable number of support points and determine $\bar{\sigma}$.

*Step 9.* From this, calculate the maximum combined stress due to bending and torsion, the Von-Mises stress:

$$\sigma_{vm} = WR\bar{\sigma}/Z_b \tag{10}$$

*Step 10.* Check gusset thickness per para. NM5-240.

## NM5-400 DESIGN PROCEDURE FOR A FABRICATED OR ROLLED STRUCTURAL CHANNEL DOUBLE-RING SUPPORT

A double-ring support can also be in the form of a fabricated or rolled structural channel.

With a rolled structural channel, the shear collar of the vessel rests directly on the top flange. See Fig. NM5-3, sketch (b).

### NM5-410 Stress in Ring

The bending and twisting moments at a point A (see Fig. NM5-5) in the ring are given by:

$$M_b = \frac{-WR}{2\pi}\left[\frac{\phi \cos \alpha}{\sin \phi} - 1 - \frac{\phi e}{R} \sin (\phi - \alpha)\right] \tag{11}$$

$$M_t = \frac{WR}{2\pi}\left[\frac{\phi \sin \alpha}{\sin \phi} - \alpha - \frac{\phi e}{R} \cos (\phi - \alpha)\right] \tag{12}$$

where

$\phi = \pi/N$

The bending stress is then given by:

$$\sigma_b = M_b/Z_b \tag{13}$$

and the torsional stress by:

$$\tau = M_t/Z_t \tag{14}$$

They can be combined in the Von-Mises stress:

$$\sigma_{vm} = (\sigma_b^2 + 3\tau^2)^{1/2} \tag{15}$$

The Von-Mises stress intensity must be no greater than the allowable stress intensity at every point on the ring.

To use Eqs. (11) through (15) to check the ring design, it is necessary to calculate $\sigma_{vm}$ at a number of locations (values of $\alpha$) to be sure that the maximum stress has been considered. Depending on the relative values of $E$, $R$, and the ring section, the maximum may occur at any location.

### NM5-420 Design Charts

Paragraph NM5-410 provides a basis for a computer procedure for ring design, but is tedious to use for hand computation. A set of charts that are derived from the equations in para. NM5-410 and cover most cases of interest is provided; see Figs. NM5-8 through NM5-10.



Copyright ASME International
Provided by IHS under license with ASME
No reproduction or networking permitted without license from IHS
Not for Resale

*Procedure.* Use the procedure of para. NM5-320, substituting $h$ for $h_b$.

## NM5-430 Section Proportions

Rings are often built from plate and welded together so that the cross sections are not standard structural shapes. It is important that nonstandard shapes be elastically stable under loadings that paras. NM5-410 or NM5-420 allow. For this reason, the section proportions should satisfy section 1.5.1.4 of the AISC Specification.[2]

## NM5-500 SPLIT-RING CONSTRUCTION

In many cases, rings are fabricated in two semicircular parts that are bolted around the vessel; thus, there will be splices in the ring. These splices must be strong enough to develop the full strength of the ring in both bending and twisting.

## NM5-510 Nomenclature

$a$ = radial distance from band to bolt hole, in. (see Fig. NM5-7)
$A_b$ = area of one bolt, in.$^2$
$b$ = effective width of flange, in.
= $3c$
$c$ = bolt hole diameter, in.
$e$ = eccentricity or lug reaction force, in.
$f$ = vertical distance between bolts, in.
$M_b$ = moment in ring due to bending, in.-lb
$M_f$ = moment on flange due to bolt load, in.-lb
$M_t$ = moment in ring due to torsion, in.-lb
$N_b$ = number of bolts = 2 (see Fig. NM5-7)
$r$ = distance from ring center of shear to bolt hole (see Fig. NM5-7)
$S_a$ = allowable stress, psi
$t_f$ = thickness of flange, in.
$Z_{min}$ = minimum section modulus of effective width of flange, in.$^3$

## NM5-520 Design Procedure

Equations (11) and (12) of para. NM5-410 provide the bending and torsional moments for any point on the ring. On the basis of duplicate ring sections and simplified design, it is recommended that splice flanges be located midway between support points.

When splice flanges are located midway between the support points, the above-referenced equations are reduced to the following simplified formulas.

For four support points:

$$M_b = W(-0.0176R + 0.0884e) \quad (16)$$

$$M_t = 0.0884We \quad (17)$$

For eight support points:

$$M_b = W(-0.00417R + 0.0239e) \quad (18)$$

$$M_t = 0.0557We \quad (19)$$

## NM5-521 Procedure

*Step 1.* Determine the maximum bending and torsional moments in the ring at the location of the flanged split.
*Step 2.* Develop an assumed flange configuration (see Fig. NM5-7).
*Step 3.* Assume a bolt location.
*Step 4.* Size the bolts based on bending (tension) or torsion (shear), whichever controls (minimum bolt size shall be $\frac{5}{8}$ in. nominal diameter).
*Step 5.* Calculate the flange thickness based on the bending (tensile) bolt load (calculated as a cantilevered beam of width $3c$ and loaded at the end by the tensile bolt load due to bending of the ring).

## NM5-522 Bolt Sizing

*(a)* Bending:

$$\text{bolt load (tensile)} = M_b/f, \text{ lb} \quad (20)$$

Bolt stress = (2)(bolt load)/$N_bA_b$, psi ≤ ASME Boiler and Pressure Vessel Code allowable (Section VIII, Division 1).

*(b)* Torsion:

$$\text{bolt load (shear)} = M_t/r, \text{ lb} \quad (21)$$

Bolt stress = bolt load/$N_bA_b$, psi ≤ 0.5 ASME Boiler and Pressure Vessel Code allowable (Section VIII, Division 1).

*(c)* Flange thickness on cantilevered flange:

[2] Manual of Steel Construction, 8th Edition, American Institute of Steel Construction, 1 East Wacker Drive, Chicago, IL 60601, 1980, pg. 5.20.



Copyright ASME International
Provided by IHS under license with ASME
No reproduction or networking permitted without license from IHS
Not for Resale

$$M_f = \text{bolt load (tensile)} \times a \quad (22)$$

$$Z_{min} = M_f/S_a \quad (23)$$

$$Z = bt_f^2/6$$

$$b = 3c$$

Therefore,

$$t_f\,(\text{min.}) = (2Z_{min}/c)^{1/2} \geq {}^3/_8 \text{ in.} \quad (24)$$

## NM5-530 Welding

All welding shall be continuous. All butt welds shall be full penetration. Welding shall conform to the American Welding Society D1.1 Structural Welding Code.

## NM5-600 EXAMPLES

### NM5-610 Double-Ring Support

Consider a 10 ft diameter vessel containing 126,000 lb of liquid with eight lugs having an eccentricity of 4.5 in., $e$ = 6.2 in., and a lug projection of 6 in. The candidate cross section is shown in Fig. NM5-6. The ring is to be fabricated of steel with an allowable ASME Code stress of 25,000 psi.

*Step 1.* $N = 8$

*Step 2.* $e/R = 6.2/61 = 0.1$

*Step 3.* $Z_b = 58.5$ in.$^3$; $Z_t = 3.94$ in.$^3$; $Z_b/Z_t = 14.8$

*Step 4.* From the chart for eight lugs, $\sigma = 0.18$

*Step 5.* Assuming that the vessel itself would weigh 5% as much as the contents, the entire supported weight is 132,400 lb.

$$\sigma_{vm} = WR\bar{\sigma}/Z_b$$
$$= (132{,}400)(61)(0.18)/58.5 = 24{,}850 \text{ psi}$$

Thus, the stress intensity is less than the allowable stress and the section chosen is adequate.

*Step 6.* Using para. NM5-240, calculate the required minimum gusset thickness. Equation (5) gives the maximum value of $t_g$ = 6/16 = $^3/_8$ in.

### NM5-620 Band With Lugs

Assume a 10 ft diameter × 10 ft straight-side vessel. Use a specific gravity of 1.2 and a lug load eccentricity $E$ of 3 in. Assume eight lugs. The lower head is ASME flanged and dished. The flooded weight of the vessel is approximately 67,000 lb.

Try a band with lugs, similar to Fig. NM5-2. For the 10 ft diameter, the band will be $^3/_4$ in. thick.

Calculate the required lug height. Assume $b$ = 6 in. Then $b/D$ = 6/122 = 0.05. $M_L$ = 0.022.

$$h_L = \left(\frac{6DWEM_L}{SNt_b^2}\right)^{1/2}$$
$$= \left[\frac{(6)(122)(67{,}000)(3)(0.022)}{(12{,}700)(8)(0.75)^2}\right]^{1/2}$$
$$= 7.52 \text{ in.}$$

Use 8 in. high lugs on a 16 in. high × $^3/_4$ in. thick band.

### NM5-630 Split-Ring Flange

Develop a flange for splitting the ring in the previous example. This is a $^3/_4$ in. thick × 16 in. high ring on a 10 ft nominal diameter vessel. The filled weight is 67,000 lb. Assume eight lugs. From the previous example:

$E$ = 3 in.
$e$ = 3.75 in.
$R$ = 61 in.
$W$ = 67,000 lb

Referencing Fig. NM5-7, assume:

$a$ = 1.875 in.
$c$ = 0.625 in.
$f$ = 14 in.
$r$ = 7$^1/_4$ in.

*Determine Moments*

*(a)* Moment due to bending:

$$M_b = W(-0.00417R + 0.0239e)$$
$$= 67{,}000(-0.2544 + 0.090)$$
$$= -11{,}015 \text{ in.-lb}$$

*(b)* Moment due to torsion:

$$M_t = 0.0577We$$
$$= (0.0577)(67{,}000)(3.75)$$
$$= 14{,}497 \text{ in.-lb}$$



Copyright ASME International
Provided by IHS under license with ASME
No reproduction or networking permitted without license from IHS
Not for Resale

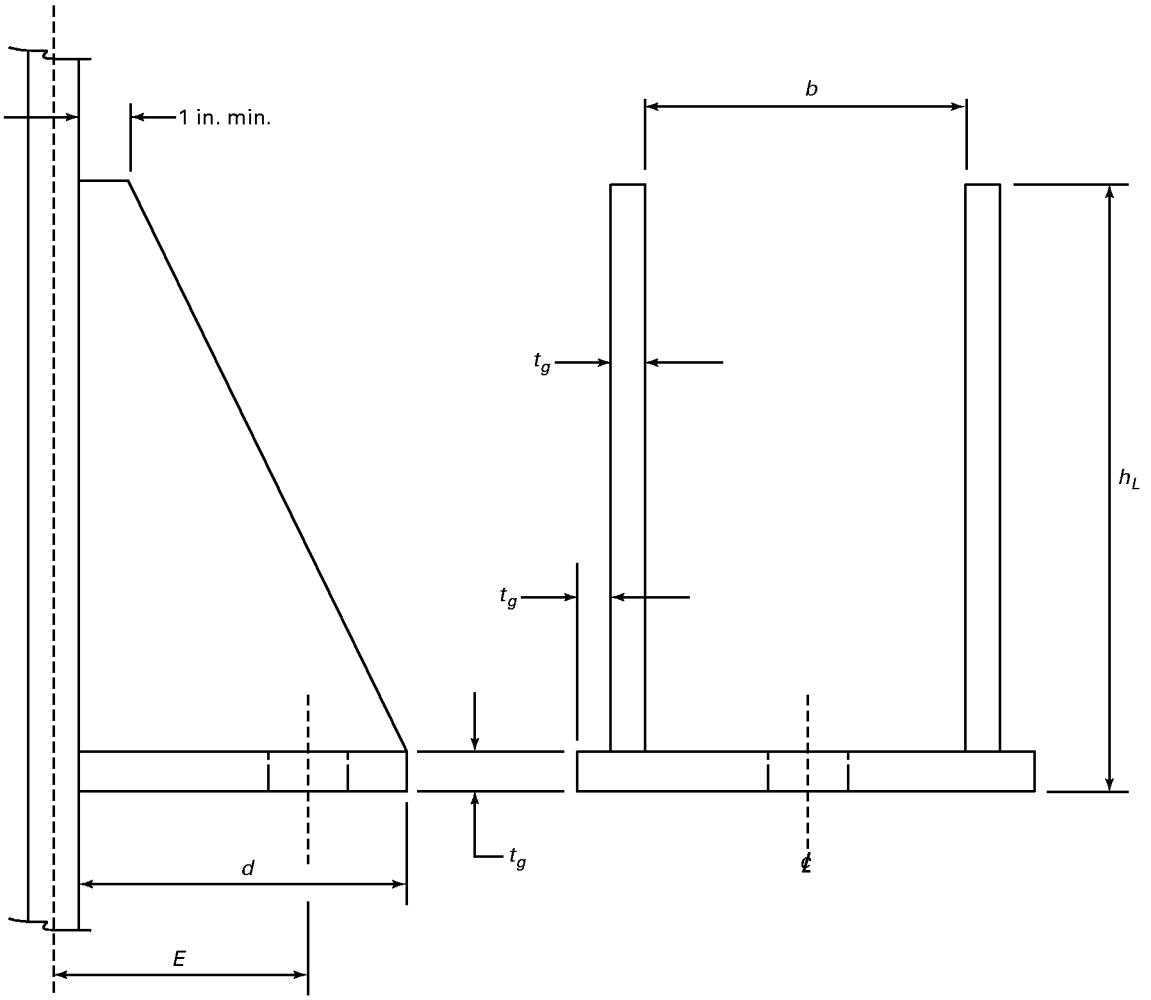


**FIG. NM5-1 LUG**

*Bolt Sizing*

*(a)* Bending:

bolt load = $M_b/f$ = 11,015/14 = 786.8 lb (tension)

Assume $^5/_8$ in. bolt; $A_b$ = 0.202 in.$^2$ Then:

bolt stress (tension) = (2)(786.8)/(2)(0.202) = 3,895 psi
< 25,000 psi for B7 bolts

*(b)* Torsion:

bolt load = $M_t/r$ = 14,497/7.25 = 2,000 lb (shear)

bolt stress = 2,000/(2)(0.202) = 4,950 psi < 25,000/2 psi

*(c)* Flange thickness on cantilevered flange:

$M_f$ = bolt load (tensile) × $a$
=(786.8)(1.875) = 1,475 in.-lb

$Z_{min}$ = 1,475/12,700 = 0.116 in.$^3$

$t_f = [(2)(0.116)/0.625]^{1/2}$
= 0.609 in. (use $^{11}/_{16}$ in. minimum)



Copyright ASME International
Provided by IHS under license with ASME
No reproduction or networking permitted without license from IHS Not for Resale

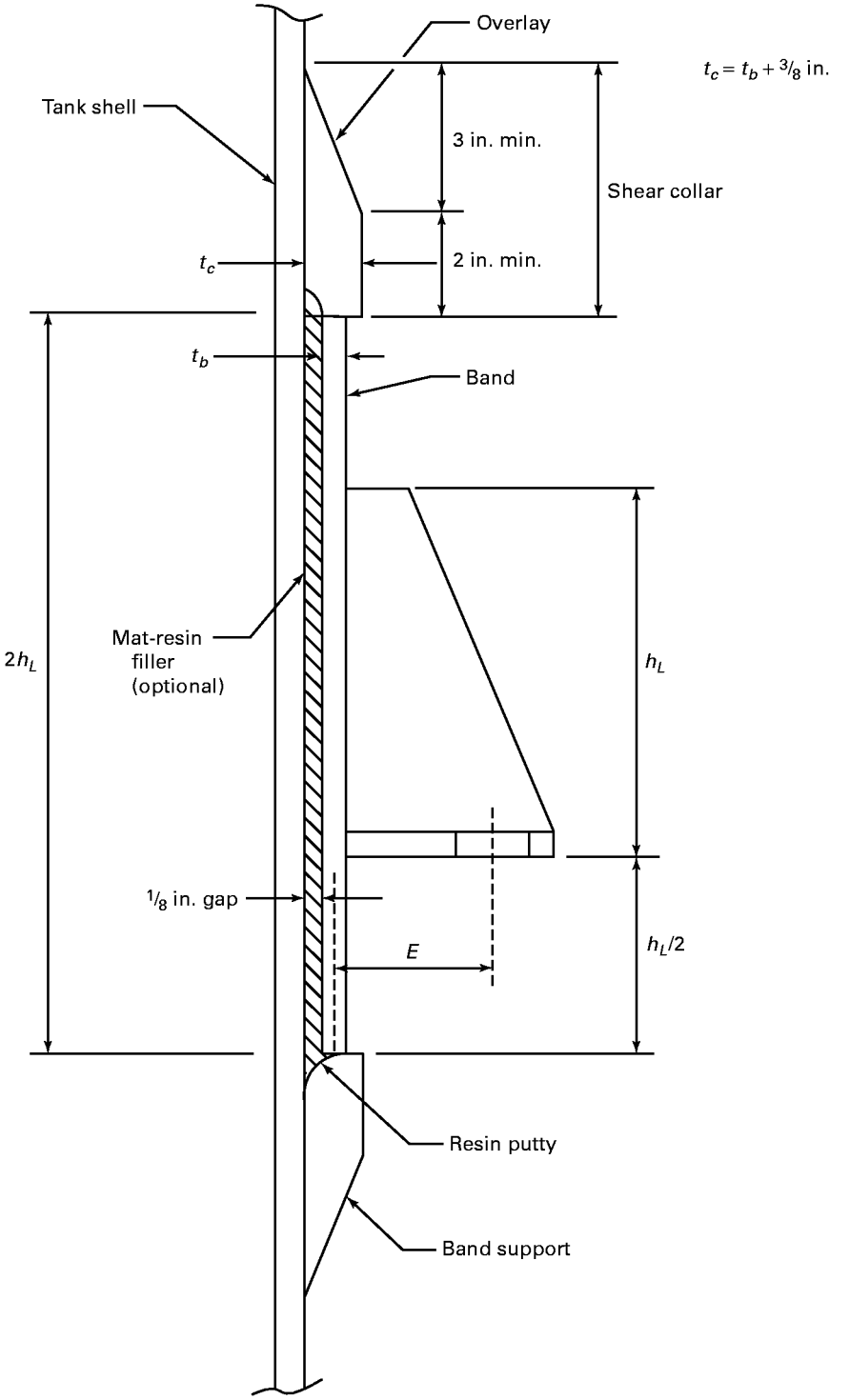


**FIG. NM5-2 LUGS ON BAND**



Copyright ASME International
Provided by IHS under license with ASME
No reproduction or networking permitted without license from IHS
Not for Resale

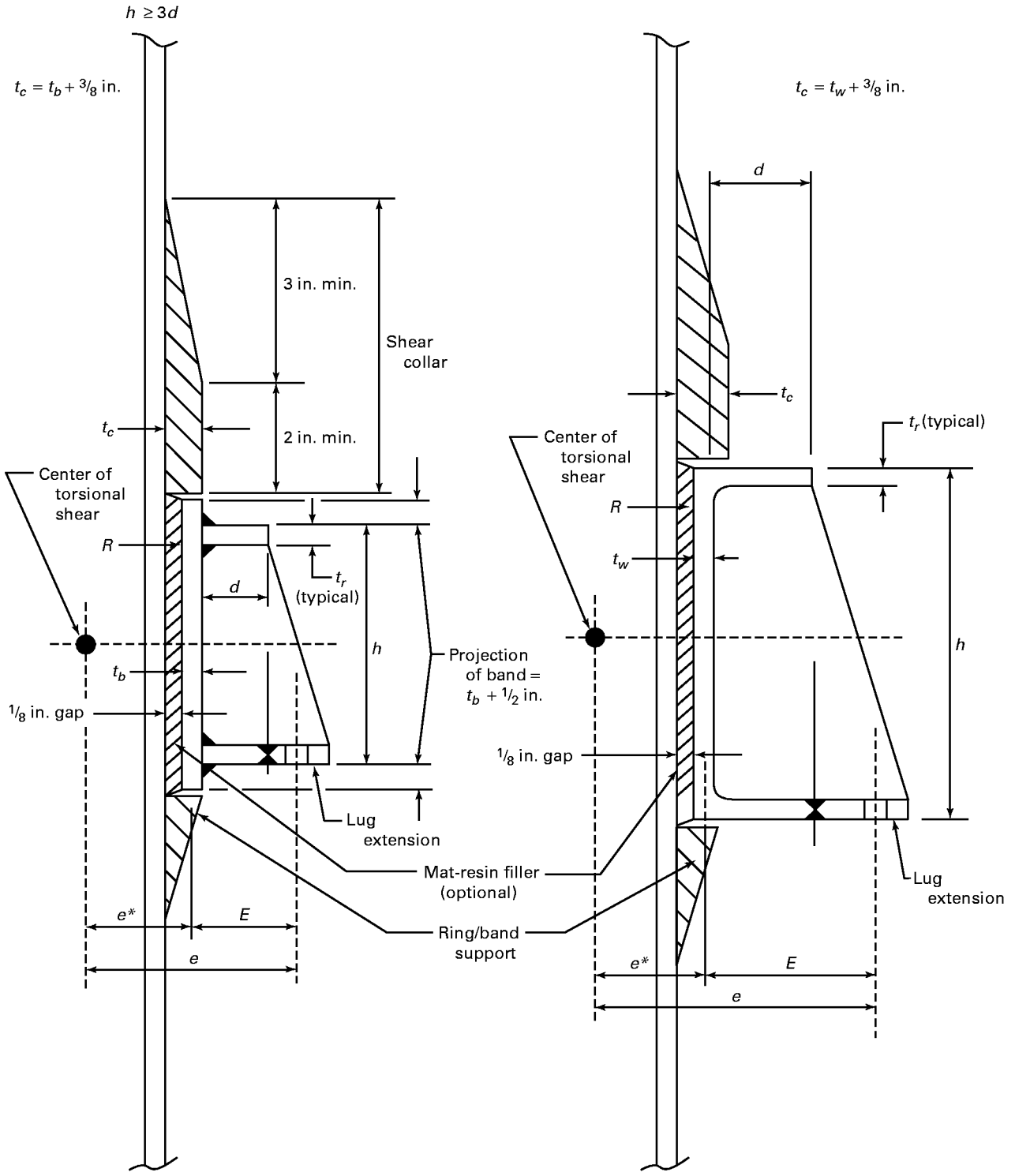


**FIG. NM5-3 RING SUPPORT OF VESSELS**



Copyright ASME International
Provided by IHS under license with ASME
No reproduction or networking permitted without license from IHS
Not for Resale

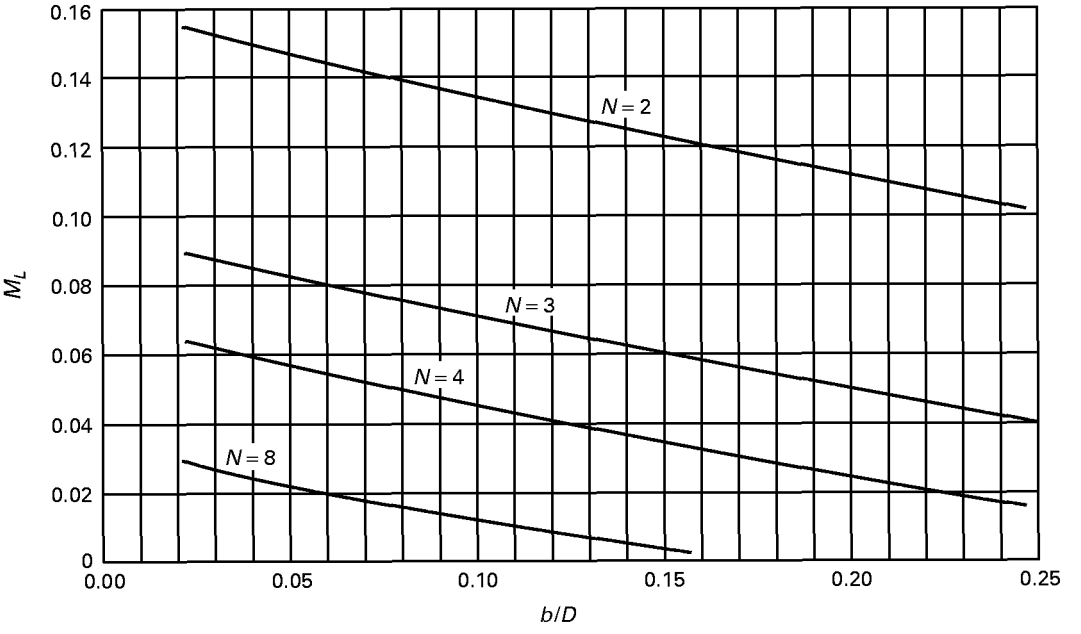


$$M_L = \frac{1}{2}\left[\frac{N}{2}\left(\frac{\cos\theta + \theta\sin\theta}{\pi}\right) - \left(\frac{\sin\theta}{2}\right) - \left(\frac{1}{2}\cot\frac{\pi}{N}\right)\right]$$

$N$ = number of lugs

$\theta$ = angle of $b/D$ expressed in radians

**FIG. NM5-4 MOMENT COEFFICIENT $M_L$**



Copyright ASME International
Provided by IHS under license with ASME
No reproduction or networking permitted without license from IHS

Not for Resale

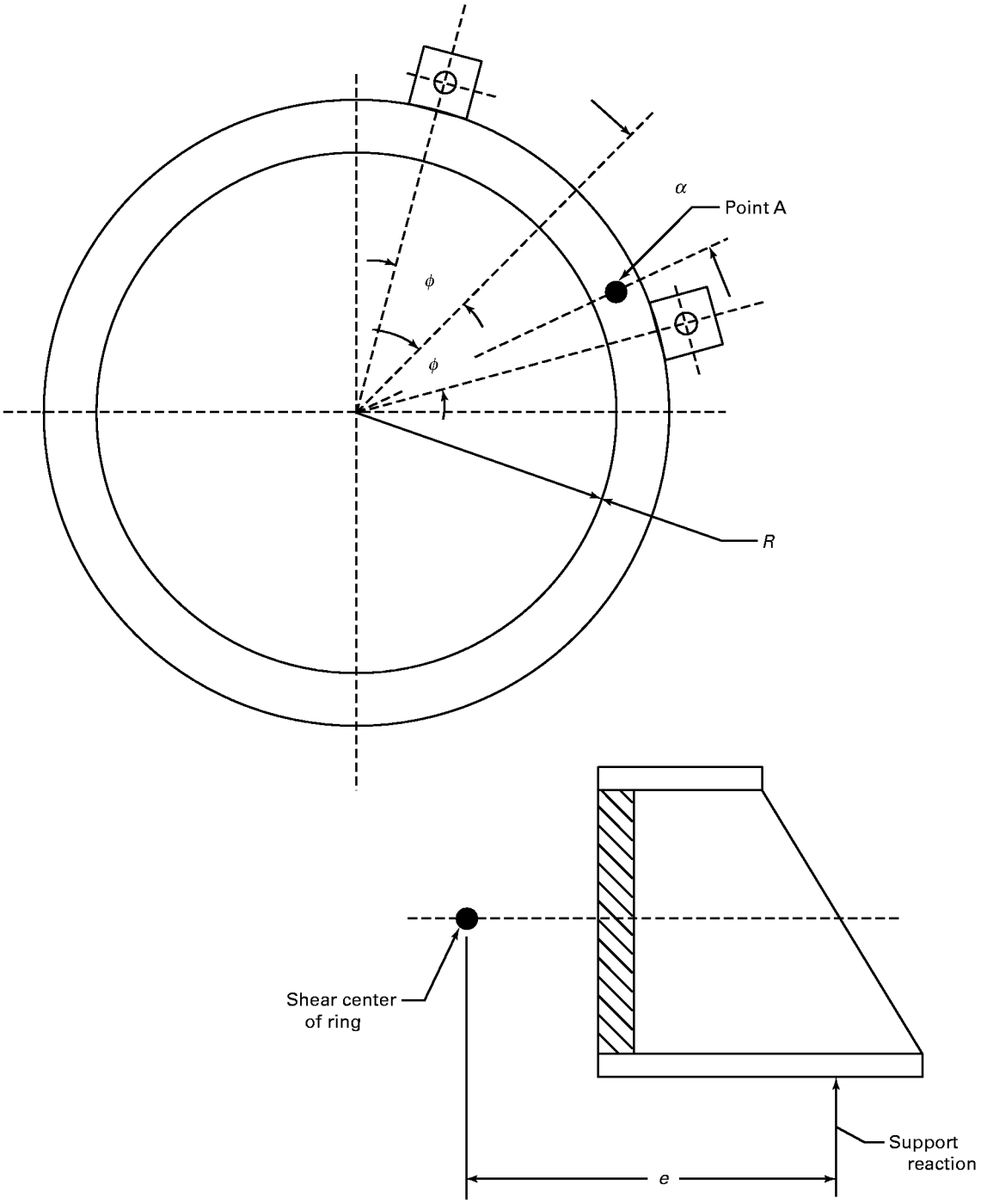


**FIG. NM5-5 GEOMETRIC QUANTITIES**



Copyright ASME International
Provided by IHS under license with ASME
No reproduction or networking permitted without license from IHS
Not for Resale

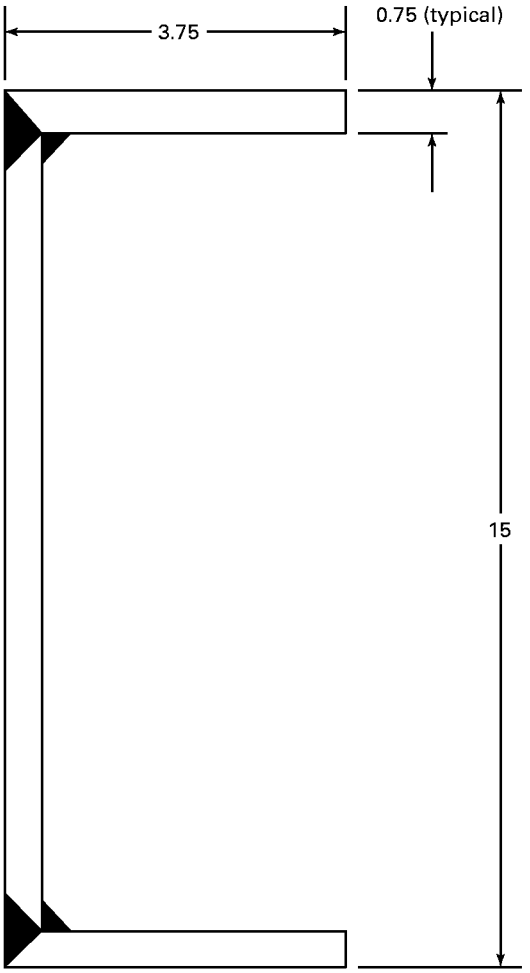


$$I = \frac{0.75(13.5)^3}{13} + 2(7.5 - 0.375)^2(3.75)(0.75) = 439.3 \text{ in.}^4$$

$$J = \frac{1}{3}(3.75)(0.75)^3 + \frac{1}{3}(13.5)(0.75)^3 + \frac{1}{3}(3.75)(0.75)^3 = 2.95 \text{ in.}^4$$

$$Z_b = \frac{439.3}{7.5} = 58.5 \text{ in.}^3$$

$$Z_t = \frac{2.95}{0.75} = 3.94 \text{ in.}^3$$

**FIG. NM5-6 EXAMPLE CROSS SECTION**



Copyright ASME International
Provided by IHS under license with ASME
No reproduction or networking permitted without license from IHS
Not for Resale

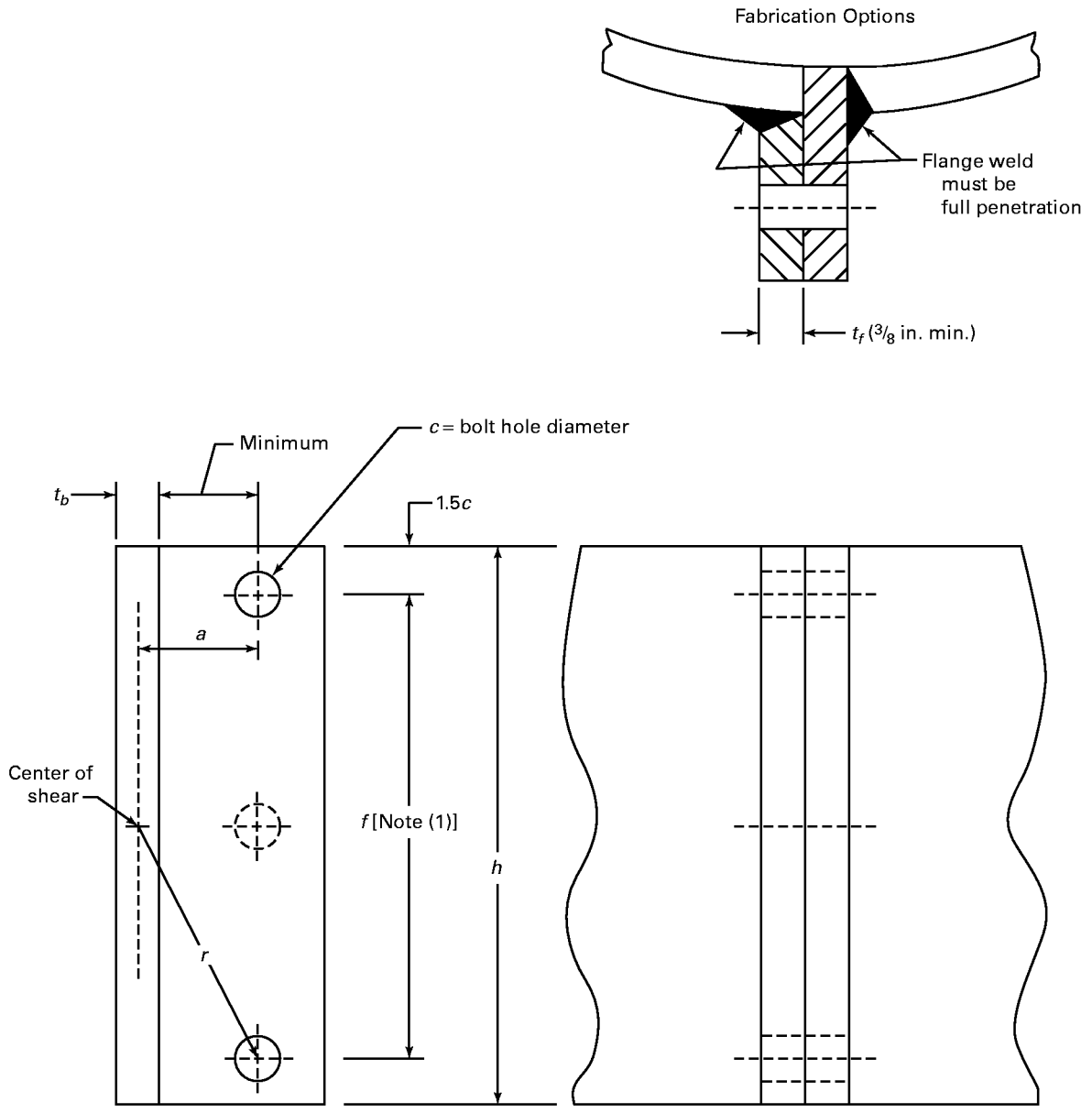


NOTE:
(1) If $f$ exceeds 8 in., add an additional bolt at midspan to stabilize the flange. Do not include in $N_b$, number of bolts.

**FIG. NM5-7 SPLIT-RING FLANGE**



Copyright ASME International
Provided by IHS under license with ASME
No reproduction or networking permitted without license from IHS
Not for Resale

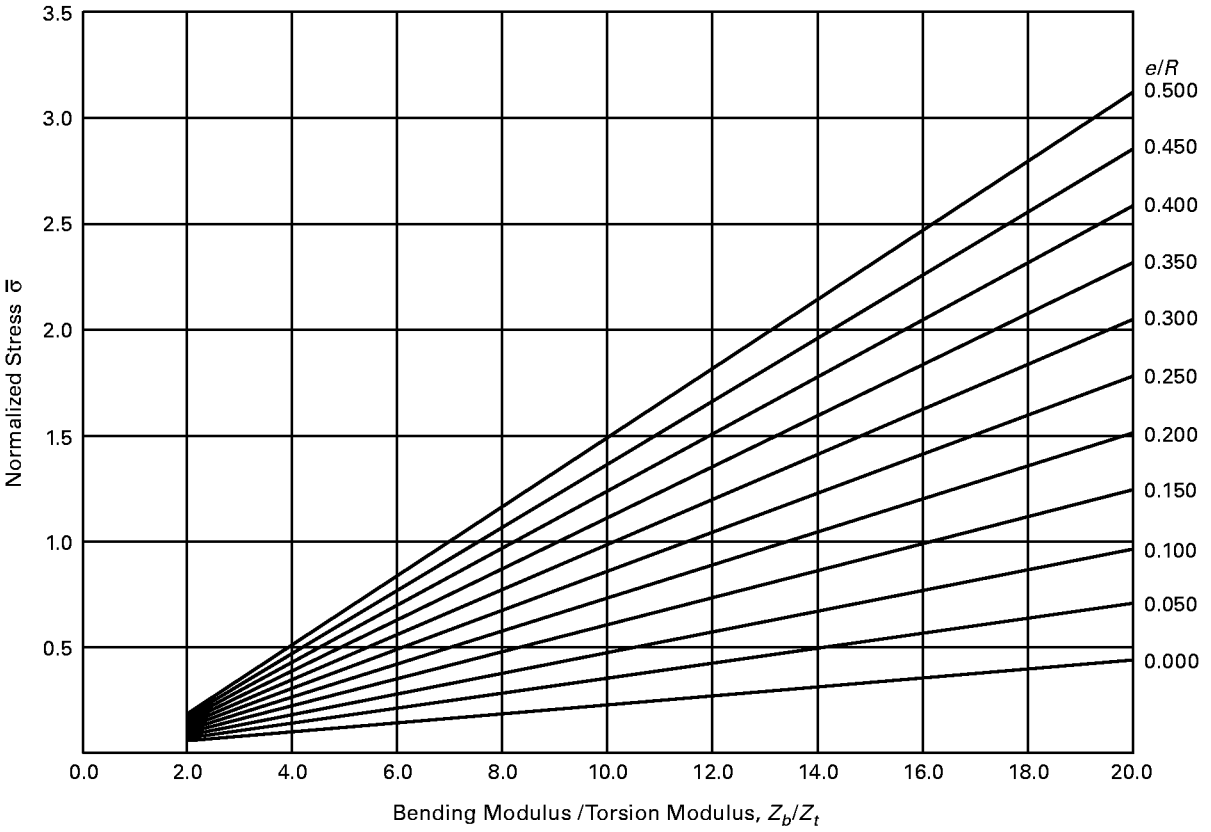


**FIG. NM5-8 RING DESIGN CHART FOR THREE LUGS**



Copyright ASME International
Provided by IHS under license with ASME
No reproduction or networking permitted without license from IHS
Not for Resale

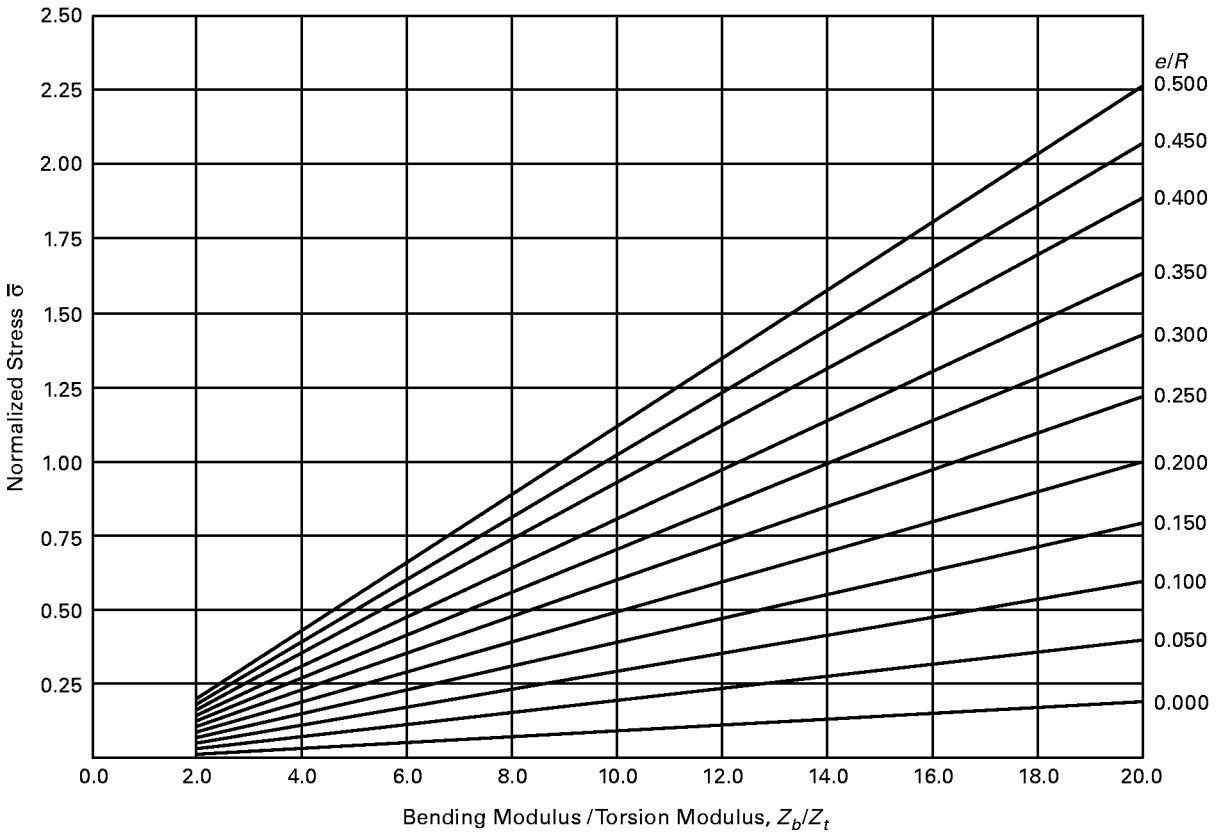


**FIG. NM5-9 RING DESIGN CHART FOR FOUR LUGS**



Copyright ASME International
Provided by IHS under license with ASME
No reproduction or networking permitted without license from IHS Not for Resale

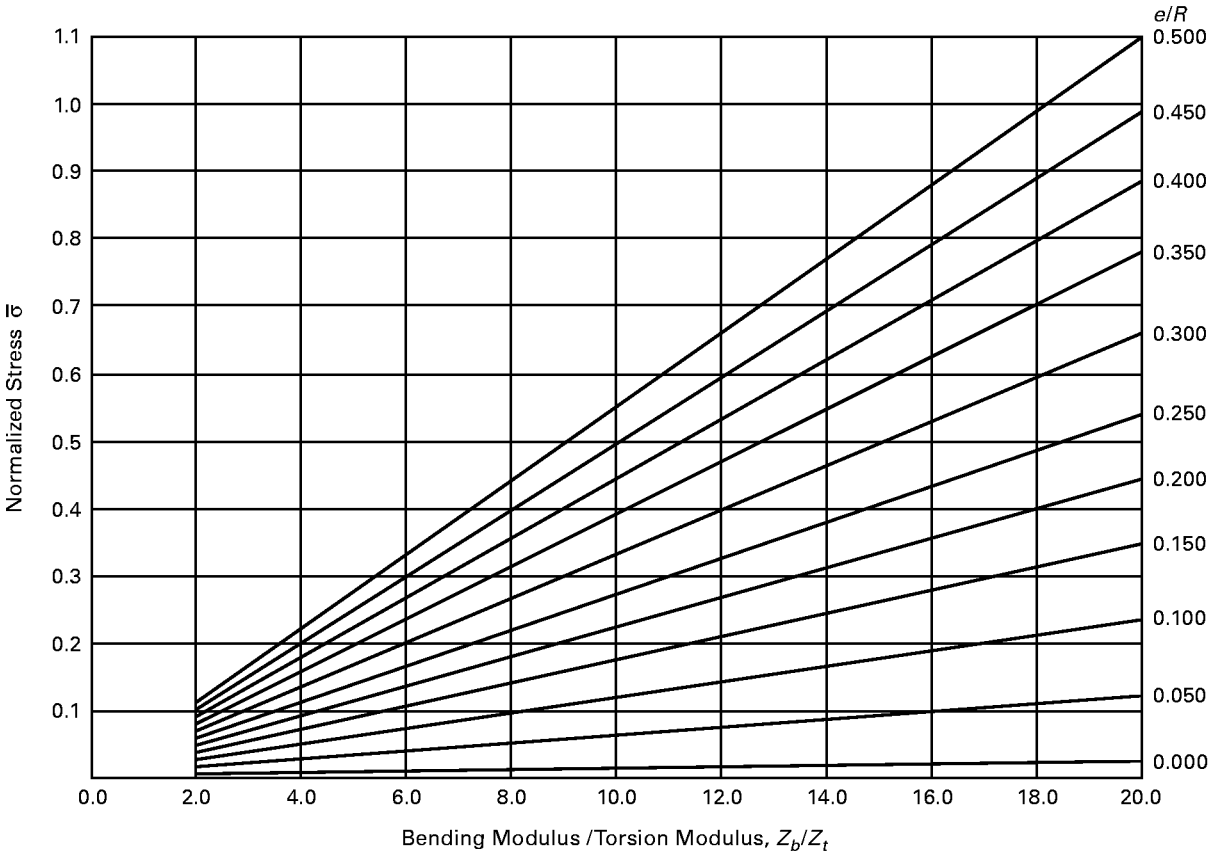


**FIG. NM5-10 RING DESIGN CHART FOR EIGHT LUGS**



--`,,,`,,,-`-`,,`,,`,`,,`---

Copyright ASME International
Provided by IHS under license with ASME
No reproduction or networking permitted without license from IHS

Not for Resale

# NONMANDATORY APPENDIX NM-6
# EXAMPLE OF A FABRICATOR'S QUALITY CONTROL PROGRAM

This Appendix shows one example of a Fabricator's Quality Control Program. It is written with mandatory language to illustrate the proper terminology for such a program.

**Table of Contents**


| Section | Title |
|---|---|
| 1 | Quality Control Policy |
| 2 | Quality Control Organization |
| 3 | Documentation |
| 4 | Inspection of Received Goods |
| 5 | In-Process Inspection |
| 6 | Finished Equipment Inspection |
| 7 | Record Retention and Controls |


## SECTION 1 QUALITY CONTROL POLICY

### 1.1 Scope

This policy establishes the requirements, systems, and procedures for the Quality Assurance Program.

### 1.2 Purpose

The purposes of the Quality Assurance Program are as follows.

**1.2.1** Ensure adherence to the rules and requirements of ASME RTP-1 through correct and thorough processing of purchase orders, drawings, specifications, and other documents.

**1.2.2** Establish an inspection system to monitor the variability of workmanship, processes, and materials in order to produce a consistent, uniform product.

**1.2.3** Establish and monitor the quality requirements related to materials and services of Vendors or Subcontractors based on surveillance and performance analysis.

**1.2.4** Provide a system for the detection of defect trends and institute corrective measures.

### 1.3 Laboratory Standards

**1.3.1** A laboratory standards program is to be maintained for the calibration of the measuring and test equipment.

**1.3.2** The program will provide confidence in the accuracy of the measuring and test equipment.

### 1.4 Test Methods

Specific written inspection and test procedures will be followed for all inspection and test operations.

### 1.5 Operating Procedures

**1.5.1** Parts will be made in the sequence and by the conditions specified in the Fabricator's operating procedures.

**1.5.2** These production procedures shall be available to Quality Control personnel during their audits so as to confirm adherence to them.

### 1.6 Documentation

**1.6.1** Inspection results shall be documented and kept on file for 5 years or as specified by contractual requirements, whichever is longer.

**1.6.2** Inspection documentation shall be by reference to shop order number, part number, or in any manner that will link inspection results with a specific part.

**1.6.3** Only approved forms shall be used for the entering of inspection results, as well as for such related items as the purchasing of raw materials, processing orders, and subcontracting work on orders.



Copyright ASME International
Provided by IHS under license with ASME
No reproduction or networking permitted without license from IHS

Not for Resale

**1.6.4** Any change in documentation must be approved by QC Management.

**1.6.5** To ensure that the latest revision of each document is recorded and used during the fabrication process, Engineering shall maintain, update, and distribute the Document Control Sheet (Table NM6-3), at intervals not to exceed 7 days.

### 1.7 Nonconformity Correction Reports

**1.7.1** When nonconformities or imperfections requiring correction are discovered, a Nonconformity Correction Report, Table NM6-6 (copy attached), shall be initiated by the Quality Control Department.

**1.7.2** The report shall be forwarded to Engineering to determine the cause of the nonconformity and to initiate proper corrective action.

**1.7.3** The determination shall include:
*(a)* manufacturing and processing procedures
*(b)* purchase orders
*(c)* results of tests

**1.7.4** The report shall be reviewed and approved by the QC Manager, who will also secure all other reviews and approvals as required by Appendix M-7 of ASME RTP-1.

### 1.8 Distribution of QC Manual

**1.8.1** The manual shall be distributed, as necessary, by the QC Manager.

**1.8.2** Distribution of these manuals is limited and each copy will be numbered.

### 1.9 QC Manual Revision

**1.9.1** The manual shall be revised, as necessary, by the QC Manager, subject to review and approval of the General Manager.

**1.9.2** The manual index shall also be periodically updated by the QC Manager.

**1.9.3** Manual updating shall be done by all holders upon receipt of a revised section, and the superseded parts shall be destroyed.

**1.9.4** The QC Manager shall maintain a master record of all manual revisions. See Table NM6-7 following.

### 1.10 Notification of In-Process Changes

**1.10.1** Initiator will notify all responsible parties in writing or verbally with written confirmation, depending on the impact of the change.

**1.10.2** Changes require Engineering approval before implementation.

**1.10.3** Necessary documentation will be changed and clearly marked.

## SECTION 2 QUALITY CONTROL ORGANIZATION

### 2.1 Scope and Purpose

This section sets forth the following.

**2.1.1** The organization of the Quality Control Department.

**2.1.2** The definition of the responsibilities and authorities associated with each job.

**2.1.3** The relationship of each job to other jobs within the organization.

### 2.2 Organizational Responsibility

**2.2.1** General Management is responsible for the establishment and maintenance of an adequate Quality Control Program.

**2.2.2** Additional personnel outside of the QC Department may be assigned to act in various quality control functions.

**2.2.3** Where inspection is done by non-QC personnel, audits of the effectiveness of their work will be periodically performed by QC.

### 2.3 Organizational Functions

**2.3.1** The total quality function encompasses many activities and personnel, but it is the function of QA personnel to ensure conformance to specifications.

These functions include:
*(a)* design review of applicable drawings;
*(b)* inspection of incoming raw materials and components;



Copyright ASME International
Provided by IHS under license with ASME
No reproduction or networking permitted without license from IHS
Not for Resale

*(c)* providing control at various stages of processing and fabricating;

*(d)* determining product release or rejection.

**2.3.2** QC Management will analyze rejection decisions. It may finalize the decision or make changes under permitted repair procedures.

### 2.4 Organization Chart

See Fig. NM6-1.

## SECTION 3 DOCUMENTATION

### 3.1 Scope and Purpose

**3.1.1** This section establishes the minimum documentation required for quality control during fabrication of RTP equipment.

**3.1.2** Adequate and meticulous documentation is the foundation of a good Quality Control Program.

### 3.2 Minimum Documentation

See Document Distribution List, Table NM6-4.

### 3.3 Document Preparation Responsibility

See Documentation Preparation and Distribution Responsibility, Table NM6-5 (copy attached).

## SECTION 4 INSPECTION OF RECEIVED GOODS

### 4.1 Resin

The results of the following shall be recorded on the Resin Log Sheet, Table M2F-1 (copy attached), prior to use in fabrication.

**4.1.1** The resin shall be checked to ensure it is the product ordered.

**4.1.2** The resin shall have the proper label for the specified product, including the manufacturer's product name and Manufacturer's Specific Product Identification (MSPI).

**4.1.3** The resin shall be visually checked to be of typical color and clarity for the specific resin, free from solid or gelled particles.

**4.1.4** The resin must be within the manufacturer's specified limits for specific gravity, viscosity, and room temperature gel time as determined by the test methods of Appendix M-2, Articles B through E, of ASME RTP-1.

**4.1.5** Material certification and/or Certificates of Compliance where applicable shall be checked against the MSPI.

**4.1.6** The storage environment of the resin must be in compliance with the manufacturer's recommendations.

### 4.2 Reinforcements

The results of the following shall be recorded on Log Sheets, Tables M1A-1, M1B-1, M1C-1, and M1D-1 (copies attached), prior to use in fabrication.

**4.2.1** The reinforcement shall be checked to ensure it is the product ordered.

**4.2.2** The reinforcement shall have the proper label, including the manufacturer's product name and the MSPI.

**4.2.3** The reinforcement package shall be checked for damage.

**4.2.4** Material certification and/or Certificates of Compliance where applicable shall be checked against the MSPI.

**4.2.5** The storage environment of reinforcements must be in compliance with the manufacturer's recommendations.

### 4.3 Curing Agents

The results of the following shall be recorded on the Curing Agents Log Sheet, Table M2F-2 (copy attached), prior to use in fabrication.

**4.3.1** Curing agents shall be checked to assure they are the products ordered.

**4.3.2** Curing agents shall have the proper label for the specified product, including the manufacturer's name and the MSPI.

**4.3.3** Curing agents shall be visually checked to assure there is no stratification of the material in two or more phases. In the case of liquids, they shall be free of sediment or solid particles.



Copyright ASME International
Provided by IHS under license with ASME
No reproduction or networking permitted without license from IHS
Not for Resale

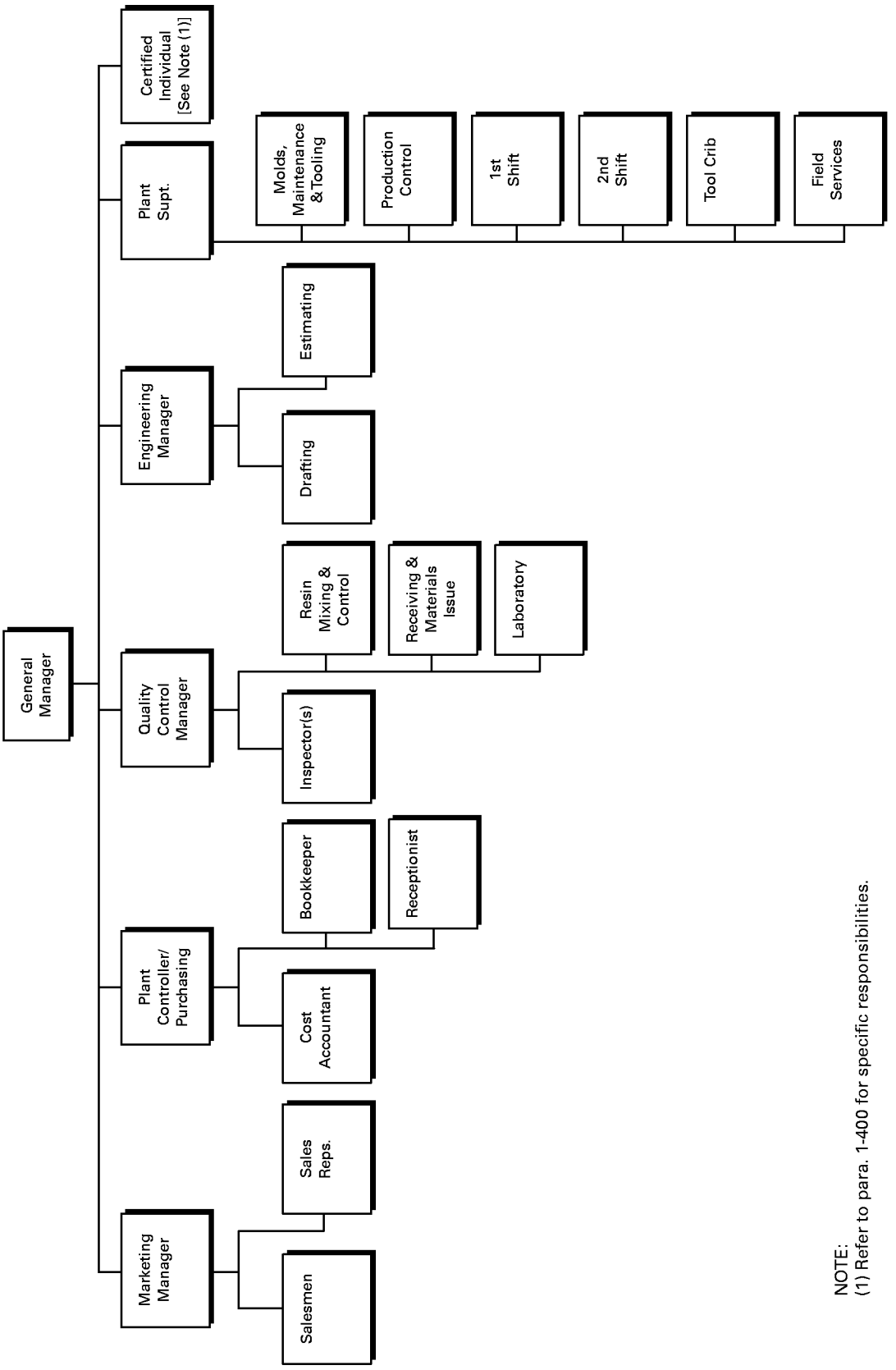


NOTE:
(1) Refer to para. 1-400 for specific responsibilities.

**FIG. NM6-1 ORGANIZATION CHART**

**(00)**



Copyright ASME International
Provided by IHS under license with ASME
No reproduction or networking permitted without license from IHS

Not for Resale

**4.3.4** Curing activity of the curing agent shall be checked using the test method outlined in Appendix M-2, Article E, of ASME RTP-1.

**4.3.5** The storage environment of curing agents must be in compliance with the manufacturer's recommendations.

### 4.4 Purchased and/or Subvended Items

**4.4.1** The item(s) must be checked to assure that it is the product ordered.

**4.4.2** The item(s) must be inspected for damage.

**4.4.3** The item(s) must be in compliance with the applicable drawings, specifications, and test methods that are part of the Fabricator/Subvendor/User agreement.

**4.4.4** The item(s) shall be properly stored to insure integrity.

### 4.5 Common Additives

The results of the following shall be recorded on the Common Additives Log Sheet, Table M2G-1 (copy attached), prior to use in fabrication.

**4.5.1** Additives must be checked to assure they are the product ordered.

**4.5.2** Additives shall have the proper label for the specified product, including the manufacturer's product name and the MSPI.

**4.5.3** Additive packaging must be checked for damage.

**4.5.4** Additives must be stored in an environment that complies with the manufacturer's recommendations.

## SECTION 5 IN-PROCESS INSPECTION

### 5.1 Resin Mixing

The following data shall be recorded on the Mixing Data Sheet, Table NM6-1 (copy attached).

**5.1.1** All resin mixing and primary preparation shall be done in one location under controlled conditions.

**5.1.2** Formulas that have been predetermined for each particular type of resin must be kept in a logbook containing completed Mixing Data Sheets.

**5.1.3** Mixing Data Sheets are also filled out for each batch and kept in a separate log with reference to the particular job number(s).

### 5.2 Material Dispersion

**5.2.1** Resin must be dispersed in containers that are clearly marked, identifying their contents. These identifying numbers must be transferred to the Component Data Sheet, Table NM6-2 (copy attached), for the component utilizing that resin.

**5.2.2** Reinforcements must be visually inspected, as they are dispersed, for imperfections (such as holes, cuts, thin spots, and separations) and contaminants (such as dirt, oil, grease, and foreign objects) under adequate overhead lighting. Dimensions, weights, and identifying numbers must be recorded on Log Sheets (Tables M1A-1, M1B-1, M1C-1, and M1D-1).

### 5.3 Component Fabrication

The following data must be recorded on the Component Data Sheet, Table NM6-2 (copy attached), prior to assembly.

**5.3.1** As components are fabricated, the identification numbers of the materials used are recorded.

**5.3.2** The lamination sequence of a particular component must be recorded and verified to be correct.

**5.3.3** On machine-made components, pertinent machine settings must be recorded.

**5.3.4** Curing agent system and amount utilized for each component must be recorded.

**5.3.5** Barcol readings of fabricated components must be taken and recorded.

### 5.4 Assembly

The following data must be recorded on the Inspection Checklist, Table NM7-2 (copy attached): Throughout the assembly procedure, proper sequences, materials, and dimensions must be verified.

## SECTION 6 FINISHED EQUIPMENT INSPECTION

The following data must be recorded on the Inspection Checklist, Table NM7-2 (copy attached).



Copyright ASME International
Provided by IHS under license with ASME
No reproduction or networking permitted without license from IHS
Not for Resale

### 6.1 Resin Cure

**6.1.1** Surface hardness shall be checked in accordance with ASTM D 2583. Random readings must be taken on all parts and overlays. Certain corrosion barriers and cure systems may result in lower than typical hardness. If this is anticipated, an adjusted Barcol hardness value must be established with the User prior to fabrication.

**6.1.2** All surfaces including overlays must pass an acetone sensitivity test. This is done by rubbing several drops of acetone on a small area and allowing the acetone to evaporate. Tackiness indicates improper resin cure.

**6.1.3** All repairs to correct a nonconformity must be made in accordance with Appendix M-7 of ASME RTP-1.

### 6.2 Dimensions and Laminate Thickness

**6.2.1** Thicknesses of all components and overlays must be checked in accordance with para. 6-920 of ASME RTP-1. Thicknesses can be verified by measuring actual cutouts, where possible, or employing an ultrasonic or magnetic gage.

**6.2.2** All dimensions and locations must be checked against the equipment drawing and recorded.

**6.2.3** All repairs to correct a nonconformity must be made in accordance with Appendix M-7 of ASME RTP-1.

### 6.3 Visual Imperfections

**6.3.1** The entire fabrication shall be checked for visual imperfections as described in Table 6-1 of ASME RTP-1. The equipment must comply with the Visual Inspection Level that has been specified.

**6.3.2** All repairs to correct an imperfection must be made in accordance with Appendix M-7 of ASME RTP-1.

### 6.4 Physical Property Tests

**6.4.1** Reinforcement-to-resin ratio is established through loss by ignition testing in accordance with ASTM D 2584. Each component shall be tested if a cutout or trim area is available.

**6.4.2** Laminate proof tests on a cutout or end sample from the shell shall be done in accordance with ASTM D 638. Values obtained must be equal to or greater than those specified and used in design calculations.

### 6.5 Equipment Pressure Tests

**6.5.1** See para. 6-950 of ASME RTP-1 for requirements on pressure tests.

**6.5.2** It is company safety policy that:

*(a)* a relief valve set at 2 psig to 3 psig above the maximum test pressure be installed at the top of all vessels to be hydro tested under positive pressure;

*(b)* prior to applying pressure, all air must be displaced by water on vessels to receive a hydro test at a positive pressure;

*(c)* all vacuum tests must be conducted outside the shop, behind substantial safety barriers;

*(d)* the Quality Control Manager must review and approve all test setups for safety prior to applying pressure or vacuum.

## SECTION 7 RECORD RETENTION AND CONTROLS

### 7.1 Scope

**7.1.1** This procedure shall ensure that the records retained are complete and reliable.

**7.1.2** Inspection and testing records shall, as a minimum, indicate the nature and number of observations made, and the number and type of nonconformities found.

**7.1.3** Records shall be available for review as one of the principal forms of objective evidence of the Quality Assurance Program.

### 7.2 Application and Retention

**7.2.1** In general, records will be retained by the Quality Control Department.

**7.2.2** These records shall be used basically to verify product conformance. They shall indicate the acceptability of work or products and the action taken in connection with nonconformities.



Copyright ASME International
Provided by IHS under license with ASME
No reproduction or networking permitted without license from IHS
Not for Resale

## 7.3 Record Retention

The Quality Control Department shall maintain inspection and test records of complete assembled units or subassemblies. These records shall be stored and maintained for 5 years.

## 7.4 Procedure for Record Handling

**7.4.1** Records shall be filed primarily according to Shop Order number.

**7.4.2** For incoming inspection, records shall be subdivided according to part number or alphabetically according to the name of the supplier.

**7.4.3** Serialized items for shipment to a customer shall be filed sequentially. A separate file will be maintained to show dates of shipments of individual items or groups of serialized items.

**7.4.4** Records of shipped items shall show part name, part number, and serial number of the product. This shall be followed by a record of inspections, tests, etc., that will verify that the product conformed to specification at time of shipment.

**7.4.5** Records shall form a basis of analysis and management action regarding the Quality Control Program.

**Appendix #1 —Tables**

| Table | Description | Effective Date |
|---|---|---|
| M2F-1 | Resin Log Sheet | xx/xx/xx |
| M2F-2 | Curing Agents Log Sheet | xx/xx/xx |
| M1A-1 | Veil and Mat Reinforcement Log Sheet | xx/xx/xx |
| M1B-1 | Roving Reinforcement Log Sheet | xx/xx/xx |
| M1C-1 | Fabric Reinforcement Log Sheet | xx/xx/xx |
| M1D-1 | Milled Fiber Reinforcement Log Sheet | xx/xx/xx |
| M2G-1 | Common Additives Log Sheet | xx/xx/xx |
| NM6-1 | Mixing Data Sheet | xx/xx/xx |
| NM6-2 | Component Data Sheet | xx/xx/xx |
| NM6-3 | Document Control Sheet | xx/xx/xx |
| NM6-4 | Document Distribution List | xx/xx/xx |
| NM6-5 | Document Preparation and Distribution Responsibility | xx/xx/xx |
| NM6-6 | Nonconformity Correction Report (2 pages) | xx/xx/xx |
| NM6-7 | QC Manual Master Revision List | xx/xx/xx |
| NM7-2 | Inspection Checklist for RTP Equipment (3 pages) | xx/xx/xx |



Copyright ASME International
Provided by IHS under license with ASME
No reproduction or networking permitted without license from IHS
Not for Resale

## TABLE M2F-1 RESIN LOG SHEET

Manufacturer _____ QC Contact _____

Resin _____ Address _____

Spindle no. _____ Telephone no. _____

Emergency telephone no. _____

| Date | Lot No. | Gel Time @ 25°C (Minutes) | Viscosity @ 25°C (cps) | | Specific Gravity @ 25°C | Visual Examination |
|---|---|---|---|---|---|---|
| | | | @ 60 rpm | @ 6 rpm | | |
| | | | | | | |
| | | | | | | |
| | | | | | | |
| | | | | | | |
| | | | | | | |
| | | | | | | |
| | | | | | | |
| | | | | | | |
| | | | | | | |
| | | | | | | |
| | | | | | | |
| | | | | | | |
| | | | | | | |
| | | | | | | |
| | | | | | | |
| | | | | | | |
| | | | | | | |
| | | | | | | |
| Manufacturer's Specification: | | | | | | |

GENERAL NOTE: This form may be reproduced and used without written permission from ASME if used for purposes other than republication.



Copyright ASME International
Provided by IHS under license with ASME
No reproduction or networking permitted without license from IHS
Not for Resale

## TABLE M2F-2 CURING AGENTS LOG SHEET

Manufacturer _____ QC contact _____

Curing agent _____ Address _____

Standard resin _____ Telephone no. _____

Emergency telephone no. _____

| Date | Lot No. | Gel Time @ 25°C (Minutes) | Visual Examination |
|---|---|---|---|
| | | | |
| | | | |
| | | | |
| | | | |
| | | | |
| | | | |
| | | | |
| | | | |
| | | | |
| | | | |
| | | | |
| | | | |
| | | | |
| | | | |
| | | | |
| | | | |

GENERAL NOTE: This form may be reproduced and used without written permission from ASME if used for purposes other than republication.



Copyright ASME International
Provided by IHS under license with ASME
No reproduction or networking permitted without license from IHS Not for Resale

## TABLE M1A-1 VEIL AND MAT REINFORCEMENT LOG SHEET

Fabricator's name _____ Mat manufacturer _____

Address _____ Mat nomenclature _____

_____ Mat treatment (if given) [Note (1)] _____

_____ QC file no. _____ Mat weight [Note (2)] _____

| 1 Roll No. | 2 Reinforcement Production Date (if Given) | 3 Lot. No. [Note (1)] | 4 Packaging Inspection | | 5 Width | 6 Weight of sq ft Sample | 7 Property Inspection (Cols. 5 and 6) | | 8 Visual Inspection | |
|---|---|---|---|---|---|---|---|---|---|---|
| | | | By | Date | | | By | Date | By | Date |
| 1 | | | | | | | | | | |
| 2 | | | | | | | | | | |
| 3 | | | | | | | | | | |
| 4 | | | | | | | | | | |
| 5 | | | | | | | | | | |
| 6 | | | | | | | | | | |
| 7 | | | | | | | | | | |
| 8 | | | | | | | | | | |

Comments on visual and packaging inspection (indicate which roll):

_____

_____

GENERAL NOTE: This form may be reproduced and used without written permission from ASME if used for purposes other than republication.

NOTES:
(1) Lot, batch, product code, or other label identification.
(2) Manufacturer's label weight.



Copyright ASME International
Provided by IHS under license with ASME
No reproduction or networking permitted without license from IHS
Not for Resale

## TABLE M1B-1 ROVING REINFORCEMENT LOG SHEET

Fabricator's name _____ Roving manufacturer _____

Address _____ Roving nomenclature _____

_____ Roving yield _____

_____ QC file no. _____

| 1 Ball No. | 2 Reinforcement Production Date (if Given) | 3 Lot. No. [Note (1)] | 4 Packaging Inspection | | 5 Yield | 6 Property Inspection (Column 5) | | 7 Visual Inspection | |
|---|---|---|---|---|---|---|---|---|---|
| | | | By | Date | | By | Date | By | Date |
| 1 | | | | | | | | | |
| 2 | | | | | | | | | |
| 3 | | | | | | | | | |
| 4 | | | | | | | | | |
| 5 | | | | | | | | | |
| 6 | | | | | | | | | |
| 7 | | | | | | | | | |
| 8 | | | | | | | | | |

Comments on visual and packaging inspection (indicate which roll):

_____

_____

GENERAL NOTE: This form may be reproduced and used without written permission from ASME if used for purposes other than republication.

NOTE:
(1) Lot, batch, product code, or other label identification.



--`,,`,,`-`-`,,`,,`,`,,`---

Copyright ASME International
Provided by IHS under license with ASME
No reproduction or networking permitted without license from IHS Not for Resale

## TABLE M1C-1 FABRIC REINFORCEMENT LOG SHEET

Fabricator's name _____ Fabric manufacturer _____

Address _____ Fabric nomenclature _____

_____ Fabric weight _____

_____ QC file no. _____ Fabric construction _____

| 1 Roll No. | 2 Reinforcement Production Date (if Given) | 3 Lot. No. [Note (1)] | 4 Packaging Inspection | | 5 Width | 6 Weight | 7 Construction | 8 Property Inspection (Cols. 5, 6, and 7) | | 9 Visual Inspection | |
|---|---|---|---|---|---|---|---|---|---|---|---|
| | | | By | Date | | | | By | Date | By | Date |
| 1 | | | | | | | | | | | |
| 2 | | | | | | | | | | | |
| 3 | | | | | | | | | | | |
| 4 | | | | | | | | | | | |
| 5 | | | | | | | | | | | |
| 6 | | | | | | | | | | | |
| 7 | | | | | | | | | | | |
| 8 | | | | | | | | | | | |

Comments on visual and packaging inspection (indicate which roll):

_____

_____

GENERAL NOTE: This form may be reproduced and used without written permission from ASME if used for purposes other than republication.

NOTE:
(1) Lot, batch, product code, or other label identification.



Copyright ASME International
Provided by IHS under license with ASME
No reproduction or networking permitted without license from IHS
Not for Resale

## TABLE M1D-1 MILLED FIBER REINFORCEMENT LOG SHEET

Fabricator's name _____ Fiber manufacturer _____

Address _____ Fiber nomenclature _____

_____ Fiber length _____

_____ QC file no. _____

| 1 Package No. | 2 Reinforcement Production Date (if Given) | 3 Lot. No. [Note (1)] | 4 Packaging Inspection By | 4 Packaging Inspection Date | 5 Visual Inspection By | 5 Visual Inspection Date |
|---|---|---|---|---|---|---|
| 1 | | | | | | |
| 2 | | | | | | |
| 3 | | | | | | |
| 4 | | | | | | |
| 5 | | | | | | |
| 6 | | | | | | |
| 7 | | | | | | |
| 8 | | | | | | |

Comments on visual and packaging inspection (indicate which package):

_____

_____

GENERAL NOTE: This form may be reproduced and used without written permission from ASME if used for purposes other than republication.

NOTE:
(1) Lot, batch, product code, or other label identification.



Copyright ASME International
Provided by IHS under license with ASME
No reproduction or networking permitted without license from IHS Not for Resale

## TABLE M2G-1 COMMON ADDITIVES LOG SHEET

| | Raw Materials Inspection | Inspector | Date |
|---|---|---|---|
| Manufacturer | As Received | | |
| | In Use Quality Problems | | |
| Product Name | | | |
| Lot Number | | | |
| Additive Purpose | | | |
| Manufacturer | As Received | | |
| | In Use Quality Problems | | |
| Product Name | | | |
| Lot Number | | | |
| Additive Purpose | | | |
| Manufacturer | As Received | | |
| | In Use Quality Problems | | |
| Product Name | | | |
| Lot Number | | | |
| Additive Purpose | | | |
| Manufacturer | As Received | | |
| | In Use Quality Problems | | |
| Product Name | | | |
| Lot Number | | | |
| Additive Purpose | | | |

GENERAL NOTE: This form may be reproduced and used without written permission from ASME if used for purposes other than republication.



Copyright ASME International
Provided by IHS under license with ASME
No reproduction or networking permitted without license from IHS

Not for Resale

## TABLE NM6-1 MIXING DATA SHEET

Resin _____ Shop order no. _____

Batch _____ Customer _____

Viscosity ASTM D 2393) _____ Gel time (ASTM D 2471) _____

To be used for (circle one):

(1) Spray-up and/or shell production

(2) Finishing and assembly

(3) Hand lay-up

(4) Paraffinated top coat

Formula:

Documents:

GENERAL NOTE: This form may be reproduced and used without written permission from ASME if used for purposes other than republication.



Copyright ASME International
Provided by IHS under license with ASME
No reproduction or networking permitted without license from IHS
Not for Resale

## TABLE NM6-2 COMPONENT DATA SHEET

Shop order no.: _____ Lay-up date: _____

Component identification: _____

_____

Resin nomenclature: _____ Lot no.: _____

Curing agent system: _____

| *Curing Agent* | *Amount By %* |
|---|---|
| COBALT: [ ] Octoate ( _____ % active) | _____ |
| [ ] Naphthenate ( _____ % active) | _____ |
| DMA | _____ |
| MEKP | _____ |
| CHP | _____ |
| BPO ( _____ % active) | _____ |

Laminate sequence: _____

_____

Veil type: _____ Manufacturer: _____

Product code/lot no.: _____ Prod. date: _____

Mat type: _____ Manufacturer: _____

Product code/lot no.: _____ Prod. date: _____

Fabric type: _____ Manufacturer: _____

Product code/lot no.: _____ Prod. date: _____

Roving type: _____ Manufacturer: _____

Product code/lot no.: _____ Prod. date: _____

Machine settings [Note (1)]: _____

_____

_____

Barcol hardness readings [Note (2)]: _____ _____ _____ _____ _____

Acetone sensitivity [Note (3)]: [ ] Compliance [ ] Noncompliance

GENERAL NOTE: This form may be reproduced and used without written permission from ASME if used for purposes other than republication.

NOTES:
(1) On machine-made components, pertinent machine settings must be recorded.
(2) Test to be conducted in accordance with para. 6-910(b)(1) of ASME RTP-1.
(3) Test to be conducted in accordance with para. 6-910(b)(2) of ASME RTP-1.



--`,,,`,,,-`-`,,`,,`,`,,`---

Copyright ASME International
Provided by IHS under license with ASME
No reproduction or networking permitted without license from IHS

Not for Resale

## TABLE NM6-3 DOCUMENT CONTROL SHEET

| Document | Issue Date | Revision No. | Changes |
|---|---|---|---|
| 1. Purchase Order | | | |
| 2. User's Basic Requirements Specification | | | |
| 3. Approved Drawings | | | |
| 4. Bill of Material | | | |
| 5. Fabricator's Design Report | | | |
| 6. Calculations | | | |
| 7. Shop Order | | | |
| 8. Shop Qualification Documentation | | | |
| 9. Physical Test Results | | | |
| 10. Document Control Sheet | | | |
| 11. RTP Equipment Inspection Requirements | | | |
| 12. RTP Equipment Inspection Checklist | | | |
| 13. Mixing Data Sheet | | | |
| 14. Resin Log Sheet | | | |
| 15. Curing Agents Log Sheet | | | |
| 16. Reinforcement Log Sheet | | | |
| 17. Additives Log Sheet | | | |
| 18. Component Data Sheet | | | |
| 19. Nonconformity Correction Reports | | | |
| 20. Fabricator's Data Report | | | |
| 21. Fabricator's Partial Data Report | | | |
| 22. Packing List | | | |

GENERAL NOTE: This form may be reproduced and used without written permission from ASME if used for purposes other than republication.



Copyright ASME International
Provided by IHS under license with ASME
No reproduction or networking permitted without license from IHS Not for Resale

## TABLE NM6-4 DOCUMENT DISTRIBUTION LIST

| Document | Shop Order File | Quality Control File | Production Control | Shop Supt. | Engrg. and Drafting | Purchasing | Shipping |
|---|---|---|---|---|---|---|---|
| 1. Purchase Order | X | X | | | | | |
| 2. User's Basic Requirements Specification | X | X | | | X | | |
| 3. Approved Drawings | X | X | X | X | | | |
| 4. Bill of Material | X | X | X | X | | | |
| 5. Fabricator's Design Report | X | X | | | | | |
| 6. Calculations | X | X | | | | | |
| 7. Shop Order | X | X | X | X | X | X | X |
| 8. Shop Qualification Documentation | | X | | | | | |
| 9. Physical Test Results | | X | | | X | | |
| 10. Document Control Sheet | X | X | X | X | X | X | |
| 11. RTP Equipment Inspection Requirements | | X | X | X | | | |
| 12. RTP Equipment Inspection Checklist | | X | X | X | | | |
| 13. Mixing Data Sheet | | X | | | | | |
| 14. Resin Log Sheet | | X | | | | | |
| 15. Curing Agents Log Sheet | | X | | | | | |
| 16. Reinforcement Log Sheet | | X | | | | | |
| 17. Additives Log Sheet | | X | | | | | |
| 18. Component Data Sheet | | X | | | | | |
| 19. Nonconformity Correction Reports | | X | | | | | |
| 20. Fabricator's Data Report | | X | | | | | |
| 21. Fabricator's Partial Data Report | X | X | | | | | |
| 22. Packing List | X | X | X | | | | X |
| | | | | | | | |
| | | | | | | | |
| | | | | | | | |
| | | | | | | | |
| | | | | | | | |

GENERAL NOTE: This form may be reproduced and used without written permission from ASME if used for purposes other than republication.



Copyright ASME International
Provided by IHS under license with ASME
No reproduction or networking permitted without license from IHS
Not for Resale

## TABLE NM6-5 DOCUMENT PREPARATION AND DISTRIBUTION RESPONSIBILITY

| Document | Preparation [Note (1)] | Distribution [Note (1)] |
|---|---|---|
| 1. Purchase Order | 1 | 4 |
| 2. User's Basic Requirements Specification | 1 | 4 |
| 3. Approved Drawings | 2 | 4 |
| 4. Bill of Material | 2 | 4 |
| 5. Fabricator's Design Report | 2 | 4 |
| 6. Calculations | 2 | 4 |
| 7. Shop Order | 4 | 4 |
| 8. Shop Qualification Documentation | 3 | 3 |
| 9. Physical Test Results | 5 | 3 |
| 10. Document Control Sheet | 4 | 4 |
| 11. RTP Equipment Inspection Requirements | 6 | 3 |
| 12. RTP Equipment Inspection Checklist | 6 | 3 |
| 13. Mixing Data Sheet | 3 | 3 |
| 14. Resin Log Sheet | 3 | 3 |
| 15. Curing Agents Log Sheet | 3 | 3 |
| 16. Reinforcement Log Sheet | 3 | 3 |
| 17. Additives Log Sheet | 3 | 3 |
| 18. Component Data Sheet | 3 | 3 |
| 19. Nonconformity Correction Reports | 3 | 3 |
| 20. Fabricator's Data Report | 3 | 3 |
| 21. Fabricator's Partial Data Report | 5 | 4 |
| 22. Packing List | 7 | 7 |
| | | |

GENERAL NOTE: This form may be reproduced and used without written permission from ASME if used for purposes other than republication.

NOTE:
(1) Responsibilities are identified as follows:
1 — User
2 — Engineering and Drafting
3 — Quality Assurance
4 — Production Control
5 — Vendor
6 — Inspector
7 — Shipping



--`,,`,,-`-`,,`,,`,`,,`---
Copyright ASME International
Provided by IHS under license with ASME
No reproduction or networking permitted without license from IHS Not for Resale

## TABLE NM6-6 NONCONFORMITY CORRECTION REPORT

Initiation date _____

Sequence no. _____

| Shop Identification No. | User Identification Nos. | | Customer | Description of Equipment |
|---|---|---|---|---|
| | P.O. No. | Item No. | | |
| | | | | |

Work area or responsible laminator(s) or secondary bonder(s):

Description of nonconformity (i.e., size, type, location, etc.): _____

Identified by: _____ Date: _____

Method of repair or corrective action (Use back of form if necessary. If other attachments, sketches, or drawings are required, they must be referenced here and attached.): _____

Check off approvals required (see ASME RTP-1, Appendix M-7):

[ ] Registered Professional Design Engineer _____ Date _____

[ ] Fabricator's Engineering Manager _____ Date _____

[x] Inspector _____ Date _____

[x] Fabricator's Quality Control Manager _____ Date _____

[ ] _____ _____ Date _____

*(continued)*



Copyright ASME International
Provided by IHS under license with ASME
No reproduction or networking permitted without license from IHS

Not for Resale

**TABLE NM6-6 NONCONFORMITY CORRECTION REPORT (CONT'D)**

| Work done by | Name | Title | Employee No. | Name | Title | Employee No. |
|---|---|---|---|---|---|---|
| | | | | | | |
| | | | | | | |
| | | | | | | |
| | | | | | | |

Supervisor's signature: _____ Date completed: _____

Required quality control inspections and approvals (check off approvals required):

[x] Inspector _____ Date _____

[x] Fabricator's Quality Control Manager _____ Date _____

[ ] _____ _____ Date _____

[ ] _____ _____ Date _____

GENERAL NOTE: This form may be reproduced and used without written permission from ASME if used for purposes other than republication.



--`,,`,,`-`-`,,`,,`,`,,`---
Copyright ASME International
Provided by IHS under license with ASME
No reproduction or networking permitted without license from IHS Not for Resale

## TABLE NM6-7 QC MANUAL MASTER REVISION LIST

| Revision | Date | Description | Revised By | Approved |
|---|---|---|---|---|
| | | | | |

GENERAL NOTE: This form may be reproduced and used without written permission from ASME if used for purposes other than republication.



Copyright ASME International
Provided by IHS under license with ASME
No reproduction or networking permitted without license from IHS
Not for Resale

Copyright ASME International
Provided by IHS under license with ASME
No reproduction or networking permitted without license from IHS



## TABLE NM7-2 INSPECTION CHECKLIST FOR RTP EQUIPMENT

Page _____ of _____

Equipment description _____ Equipment no. _____ User's inspector _____

Fabricator _____ Location _____ Criticality level _____

P.O. no. _____ Applicable specifications _____ Reference drawing(s) _____

| Event | Inspection Event | Not Appl. | Verify | Wit-ness | Per-form | Inspr./ Date | | | | | | | | | | | | | | | | |
|---|---|---|---|---|---|---|---|---|---|---|---|---|---|---|---|---|---|---|---|---|---|---|
| 1 | Resin identification | | | | | | | | | | | | | | | | | | | | | |
| 2 | Acetone wipe test | | | | | | | | | | | | | | | | | | | | | |
| 3 | Barcol hardness test | | | | | | | | | | | | | | | | | | | | | |
| 4 | Ultraviolet stabilizing record | | | | | | | | | | | | | | | | | | | | | |
| 5 | Removal of mold release agents | | | | | → | | | | | | | | | | | | | | | | |
| 6 | Nozzle cutout specimens | | | | | | | | | | | | | | | | | | | | | |
| 7 | Testing of nozzle cutout specimens | | | | | | | | | | | | | | | | | | | | | |
| 8 | Visual inspection of laminate quality | | | | | | | | | | | | | | | | | | | | | |
| 9 | Postcuring | | | | | | | | | | | | | | | | | | | | | |
| 10 | Hydrostatic test | | | | | | | | | | | | | | | | | | | | | |
| 11 | External dimensional check — orientation/elev. | | | | | | | | | | | | | | | | | | | | | |
| 12 | Internal dimensional check | | | | | | | | | | | | | | | | | | | | | |
| 13 | Material thicknesses (poly gage, etc.) | | | | | | | | | | | | | | | | | | | | | |
| 14 | Out-of-roundness | | | | | | | | | | | | | | | | | | | | | |
| 15 | Wall taper | | | | | | | | | | | | | | | | | | | | | |
| 16 | Plumb and square of connections, supports, etc. | | | | | | | | | | | | | | | | | | | | | |
| 17 | Flange drilling | | | | | | | | | | | | | | | | | | | | | |
| 18 | Flange bolt hole spot facing | | | | | | | | | | | | | | | | | | | | | |
| 19 | Flange face flatness | | | | | → | | | | | | | | | | | | | | | | |
| 20 | Tank bearing surface flatness | | | | | | | | | | | | | | | | | | | | | |
| 21 | Knuckle radius of head-to-shell joint (bottom) | | | | | | | | | | | | | | | | | | | | | |
| 22 | Nonslip surface on top head | | | | | | | | | | | | | | | | | | | | | |
| 23 | Radiusing of all corner joints | | | | | | | | | | | | | | | | | | | | | |

Event Progress Chart

Verify — confirm event is true by evidence
Witness — personal observation of event
Perform — personal performance of event

*V* — event verified/reviewed
*A* — accepted
*R* — rejected

*P* — event in progress
*N* — no activity
*C* — event complete

*(continued)*





Not for Resale

Copyright ASME International
Provided by IHS under license with ASME
No reproduction or networking permitted without license from IHS



## TABLE NM7-2 INSPECTION CHECKLIST FOR RTP EQUIPMENT (CONT'D)

Page _____ of _____

Equipment description _____ Equipment no. _____ User's inspector _____
Fabricator _____ Location _____ Criticality level _____
P.O. no. _____ Applicable specifications _____ Reference drawing(s) _____

| Event | Inspection Event | Not Appl. | Verify | Witness | Perform | Inspr./ Date | | | | | | | | | | | | | | | | |
|---|---|---|---|---|---|---|---|---|---|---|---|---|---|---|---|---|---|---|---|---|---|---|
| 24 | Inspect nozzle joint hand lay-up | | | | | Event Progress Chart → | | | | | | | | | | | | | | | | |
| 25 | Inspect hand lay-up for attachments | | | | | | | | | | | | | | | | | | | | | |
| 26 | Gusset installation and sealing | | | | | | | | | | | | | | | | | | | | | |
| 27 | Nameplate stamping and installation | | | | | | | | | | | | | | | | | | | | | |
| 28 | Final cleaning and shipping preparation | | | | | | | | | | | | | | | | | | | | | |
| 29 | Check shop fit-up of field assembled items | | | | | | | | | | | | | | | | | | | | | |
| 30 | Check match marking of field assembled items | | | | | | | | | | | | | | | | | | | | | |
| 31 | Release for shipment | | | | | | | | | | | | | | | | | | | | | |
| 32 | Obtain Fabricator's Data Report | | | | | | | | | | | | | | | | | | | | | |
| 33 | | | | | | | | | | | | | | | | | | | | | | |
| 34 | | | | | | | | | | | | | | | | | | | | | | |
| 35 | | | | | | | | | | | | | | | | | | | | | | |
| 36 | | | | | | | | | | | | | | | | | | | | | | |
| 37 | | | | | | | | | | | | | | | | | | | | | | |
| 38 | | | | | | | | | | | | | | | | | | | | | | |
| 39 | | | | | | | | | | | | | | | | | | | | | | |
| 40 | | | | | | | | | | | | | | | | | | | | | | |
| 41 | | | | | | | | | | | | | | | | | | | | | | |
| 42 | | | | | | | | | | | | | | | | | | | | | | |
| 43 | | | | | | | | | | | | | | | | | | | | | | |
| 44 | | | | | | → | | | | | | | | | | | | | | | | |
| 45 | | | | | | | | | | | | | | | | | | | | | | |
| 46 | | | | | | | | | | | | | | | | | | | | | | |

Verify — confirm event is true by evidence
Witness — personal observation of event
Perform — personal performance of event

*V* — event verified/reviewed
*A* — accepted
*R* — rejected

*P* — event in progress
*N* — no activity
*C* — event complete

*(continued)*





Not for Resale

Copyright ASME International
Provided by IHS under license with ASME
No reproduction or networking permitted without license from IHS



## TABLE NM7-2 INSPECTION CHECKLIST FOR RTP EQUIPMENT (CONT'D)

Page _____ of _____

Equipment description _____ Equipment no. _____ User's inspector _____
Fabricator _____ Location _____ Criticality level _____
P.O. no. _____ Applicable specifications _____ Reference drawing(s) _____

| Event | Inspection Event | Not Appl. | Verify | Witness | Perform | Inspr./ Date |
|---|---|---|---|---|---|---|
| 47 | | | | | | |
| 48 | | | | | | |
| 49 | | | | | | |
| 50 | | | | | | |
| 51 | | | | | | |
| 52 | | | | | | |
| 53 | | | | | | |
| 54 | | | | | | |
| 55 | | | | | | |
| 56 | | | | | | |
| 57 | | | | | | |
| 58 | | | | | | |
| 59 | | | | | | |
| 60 | | | | | | |
| 61 | | | | | | |
| 62 | | | | | | |
| 63 | | | | | | |
| 64 | | | | | | |

→ Event Progress Chart →

Verify — confirm event is true by evidence
Witness — personal observation of event
Perform — personal performance of event

*V* — event verified/reviewed
*A* — accepted
*R* — rejected

*P* — event in progress
*N* — no activity
*C* — event complete

GENERAL NOTE: This form may be reproduced and used without written permission from ASME if used for purposes other than republication.





Not for Resale

# NONMANDATORY APPENDIX NM-7
# ACCEPTANCE INSPECTION BY USER'S INSPECTOR

## NM7-100 SCOPE

Rules for mandatory visual and physical inspection of RTP corrosion resistant vessels by the Inspector as defined in para. 1-400 are covered elsewhere in this Standard. The acceptance criteria for inspection of all vessels for special User specification or instructions, referred to in the purchase order, are the responsibility of the User or User's inspector.

## NM7-200 USER'S INSPECTION

Any special inspections required by the User shall be carried out by an inspector approved and/or authorized by the User of the vessel.

## NM7-300 INSPECTION AND RESPONSIBILITY

The Fabricator has a responsibility to the User to comply with all special purchase order requirements, specifications, instructions, or drawings. Fabrication should not proceed beyond a point designated by the User's inspector until the specified inspections have been made.

The User's inspector has the duty to verify that special purchase order requirements have been met.

Required hold point inspections and Inspection Checklist Forms may be used by the User's inspector to help verify that special purchase order requirements have been met.

Suggested checklists are given in Tables NM7-1 and NM7-2.

## NM7-400 DIMENSIONS

*(a)* It is suggested that all vessels be inspected by the User's inspector for conformance with dimensions and tolerances compatible with the planned installation.

*(b)* Tolerances concerning the location and/or orientation of nozzles, manways, attachments, and other vessel elements that do not concern vessel strength are not a mandatory portion of this Standard.

*(c)* Figure NM7-1 includes a number of suggested dimensional tolerances for nozzles, mounting lugs, etc., that the User may consider for the planned installation of the equipment.

*(d)* To include dimensional tolerances from Fig. NM7-1 (or any other such tolerances) to govern the fabrication, the User must specifically reference such in the purchase contract or User's Basic Requirements Specification.

## NM7-500 GASEOUS BUBBLES, BLISTERS, AND POROSITY

Refer to Table 6-1 for comments on these imperfections. Note that mandatory size limits are established, but no limits are established on quantity.

Though there is general consensus that a minimum of such imperfections reflects good workmanship, there is a lack of sufficient technical data to accurately relate these particular imperfections to shortened equipment life.

It is suggested that the User consult with the Fabricator about these imperfections and then establish requirements in the purchase contract or UBRS.

## NM7-600 PACKAGING, SHIPMENT, AND INSTALLATION

The User's inspector should check that all equipment is handled, packaged, and shipped according to the purchase order.

The User's inspector should assure that all information is correct on nameplates and that nameplates are permanently installed.

The User's inspector should assure that all joining or assembly kits required for field installation are complete and ready for shipment.

## NM7-700 SAFETY

The User's inspector should be familiar with the possible hazards and safety requirements associated with the use of all RTP materials and fabrication methods.

The User's inspector should observe safety requirements set up by the Fabricator and should be alert to fabricating shop hazards that might be associated with hydrostatic testing of equipment.



Copyright ASME International
Provided by IHS under license with ASME
No reproduction or networking permitted without license from IHS

Not for Resale

## TABLE NM7-1 RTP EQUIPMENT INSPECTION REQUIREMENTS

Page _____ of _____

Equipment Description: _____

Equipment No.: _____

Fabricator: _____ Shop Location: _____

P.O. No.: _____ Ref. Drawings: _____

| Inspection Requirement | Hold Point [Note (1)] | Checkpoint [Note (2)] | Data Required [Note (3)] |
|---|---|---|---|
| Verify Resin Identification | | | |
| Joint Procedures and Joiner Qualification | | | |
| In-Process Inspection of Laminate Quality | | | |
| Inspection of Balsa Core or Insulation Installation | | | |
| Inspect Shop Fit-Up of Shop Assembled Items | | | |
| In-Process Fabrication of Nozzle to Shell/Head Joints | | | |
| Acetone Wipe Test | | | |
| Barcol Hardness Test | | | |
| Ultraviolet Stabilizing Record | | | |
| Removal of Mold Release Agents | | | |
| Supply Nozzle Cutout Specimens | | | |
| Testing of Nozzle Cutout Specimens | | | |
| Final Inspection of Laminate Quality | | | |
| Laminate Thickness (Poly Gage, etc.) | | | |
| Postcuring | | | |
| Hydrostatic Test | | | |
| External Dimensional Inspection | | | |
| Inspect Stiffening Ribs | | | |
| Internal Dimensional Inspection | | | |
| Certified Test Results | | | |
| Roundness Inspection | | | |
| Tank Bearing Surface Flatness | | | |
| Inspect Secondary Lay-Ups and Sealing | | | |
| Inspect Nonslip Surface of Top Head | | | |
| Nameplate Stamping and Fabricator's Data Report | | | |
| Final Cleaning and Shipping Preparation | | | |
| Inspect Shop Fit-Up of Field Assembled Items | | | |
| Check Match Marking of Field Assembled Items | | | |
| | | | |
| | | | |
| | | | |

User's Inspector: _____ Fabricator's QA: _____

GENERAL NOTE: This form may be reproduced and used without written permission from ASME if used for purposes other than republication.

NOTES:
(1) Fabricator to stop fabrication pending inspection and release. Fabricator to notify User in writing 7 days prior to reaching this hold point.
(2) Fabricator to advise of scheduled completion, but may proceed without inspection. Fabricator to notify User in writing 7 days prior to reaching this checkpoint.
(3) Data is to be made available to Inspector at the time of inspections for his/her review and retention.



--`,,`,,`-`-`,,`,,`,`,,`---
Copyright ASME International
Provided by IHS under license with ASME
No reproduction or networking permitted without license from IHS
Not for Resale

Copyright ASME International
Provided by IHS under license with ASME
No reproduction or networking permitted without license from IHS



## TABLE NM7-2 INSPECTION CHECKLIST FOR RTP EQUIPMENT

Page _____ of _____

Equipment description _____ Equipment no. _____ User's inspector _____

Fabricator _____ Location _____ Criticality level _____

P.O. no. _____ Applicable specifications _____ Reference drawing(s) _____

| Event | Inspection Event | Not Appl. | Verify | Witness | Perform | Inspr./ Date | Event Progress Chart |
|---|---|---|---|---|---|---|---|
| 1 | Resin identification | | | | | | |
| 2 | Acetone wipe test | | | | | | |
| 3 | Barcol hardness test | | | | | | |
| 4 | Ultraviolet stabilizing record | | | | | | |
| 5 | Removal of mold release agents | | | | | → | |
| 6 | Nozzle cutout specimens | | | | | | |
| 7 | Testing of nozzle cutout specimens | | | | | | |
| 8 | Visual inspection of laminate quality | | | | | | |
| 9 | Postcuring | | | | | | |
| 10 | Hydrostatic test | | | | | | |
| 11 | External dimensional check — orientation/elev. | | | | | | |
| 12 | Internal dimensional check | | | | | | |
| 13 | Material thicknesses (poly gage, etc.) | | | | | | |
| 14 | Out-of-roundness | | | | | | |
| 15 | Wall taper | | | | | | |
| 16 | Plumb and square of connections, supports, etc. | | | | | | |
| 17 | Flange drilling | | | | | | |
| 18 | Flange bolt hole spot facing | | | | | | |
| 19 | Flange face flatness | | | | | → | |
| 20 | Tank bearing surface flatness | | | | | | |
| 21 | Knuckle radius of head-to-shell joint (bottom) | | | | | | |
| 22 | Nonslip surface on top head | | | | | | |
| 23 | Radiusing of all corner joints | | | | | | |

Verify — confirm event is true by evidence
Witness — personal observation of event
Perform — personal performance of event

*V* — event verified/reviewed
*A* — accepted
*R* — rejected

*P* — event in progress
*N* — no activity
*C* — event complete

*(continued)*





Not for Resale

Copyright ASME International
Provided by IHS under license with ASME
No reproduction or networking permitted without license from IHS



## TABLE NM7-2 INSPECTION CHECKLIST FOR RTP EQUIPMENT (CONT'D)

Page _____ of _____

Equipment description _____ Equipment no. _____ User's inspector _____

Fabricator _____ Location _____ Criticality level _____

P.O. no. _____ Applicable specifications _____ Reference drawing(s) _____

| Event | Inspection Event | Not Appl. | Verify | Witness | Perform | Inspr./ Date |
|---|---|---|---|---|---|---|
| 24 | Inspect nozzle joint hand lay-up | | | | | |
| 25 | Inspect hand lay-up for attachments | | | | | |
| 26 | Gusset installation and sealing | | | | | |
| 27 | Nameplate stamping and installation | | | | | |
| 28 | Final cleaning and shipping preparation | | | | | |
| 29 | Check shop fit-up of field assembled items | | | | | → |
| 30 | Check match marking of field assembled items | | | | | |
| 31 | Release for shipment | | | | | |
| 32 | Obtain Fabricator's Data Report | | | | | |
| 33 | | | | | | |
| 34 | | | | | | |
| 35 | | | | | | |
| 36 | | | | | | |
| 37 | | | | | | |
| 38 | | | | | | |
| 39 | | | | | | |
| 40 | | | | | | |
| 41 | | | | | | |
| 42 | | | | | | |
| 43 | | | | | | |
| 44 | | | | | | → |
| 45 | | | | | | |
| 46 | | | | | | |

Event Progress Chart

Verify — confirm event is true by evidence
Witness — personal observation of event
Perform — personal performance of event

*V* — event verified/reviewed
*A* — accepted
*R* — rejected

*P* — event in progress
*N* — no activity
*C* — event complete

*(continued)*





Not for Resale

Copyright ASME International
Provided by IHS under license with ASME
No reproduction or networking permitted without license from IHS





## TABLE NM7-2 INSPECTION CHECKLIST FOR RTP EQUIPMENT (CONT'D)

Page _____ of _____

Equipment description _____ Equipment no. _____ User's inspector _____

Fabricator _____ Location _____ Criticality level _____

P.O. no. _____ Applicable specifications _____ Reference drawing(s) _____

| Event | Inspection Event | Not Appl. | Verify | Witness | Perform | Inspr./ Date | → Event Progress Chart → | | | | | | | | | | | | | | | |
|---|---|---|---|---|---|---|---|---|---|---|---|---|---|---|---|---|---|---|---|---|---|---|
| 47 | | | | | | | | | | | | | | | | | | | | | | |
| 48 | | | | | | | | | | | | | | | | | | | | | | |
| 49 | | | | | | | | | | | | | | | | | | | | | | |
| 50 | | | | | | | | | | | | | | | | | | | | | | |
| 51 | | | | | | | | | | | | | | | | | | | | | | |
| 52 | | | | | | | | | | | | | | | | | | | | | | |
| 53 | | | | | | | | | | | | | | | | | | | | | | |
| 54 | | | | | | | | | | | | | | | | | | | | | | |
| 55 | | | | | | | | | | | | | | | | | | | | | | |
| 56 | | | | | | | | | | | | | | | | | | | | | | |
| 57 | | | | | | | | | | | | | | | | | | | | | | |
| 58 | | | | | | | | | | | | | | | | | | | | | | |
| 59 | | | | | | | | | | | | | | | | | | | | | | |
| 60 | | | | | | | | | | | | | | | | | | | | | | |
| 61 | | | | | | | | | | | | | | | | | | | | | | |
| 62 | | | | | | | | | | | | | | | | | | | | | | |
| 63 | | | | | | | | | | | | | | | | | | | | | | |
| 64 | | | | | | | | | | | | | | | | | | | | | | |

Verify — confirm event is true by evidence
Witness — personal observation of event
Perform — personal performance of event

*V* — event verified/reviewed
*A* — accepted
*R* — rejected

*P* — event in progress
*N* — no activity
*C* — event complete

GENERAL NOTE: This form may be reproduced and used without written permission from ASME if used for purposes other than republication.



Not for Resale

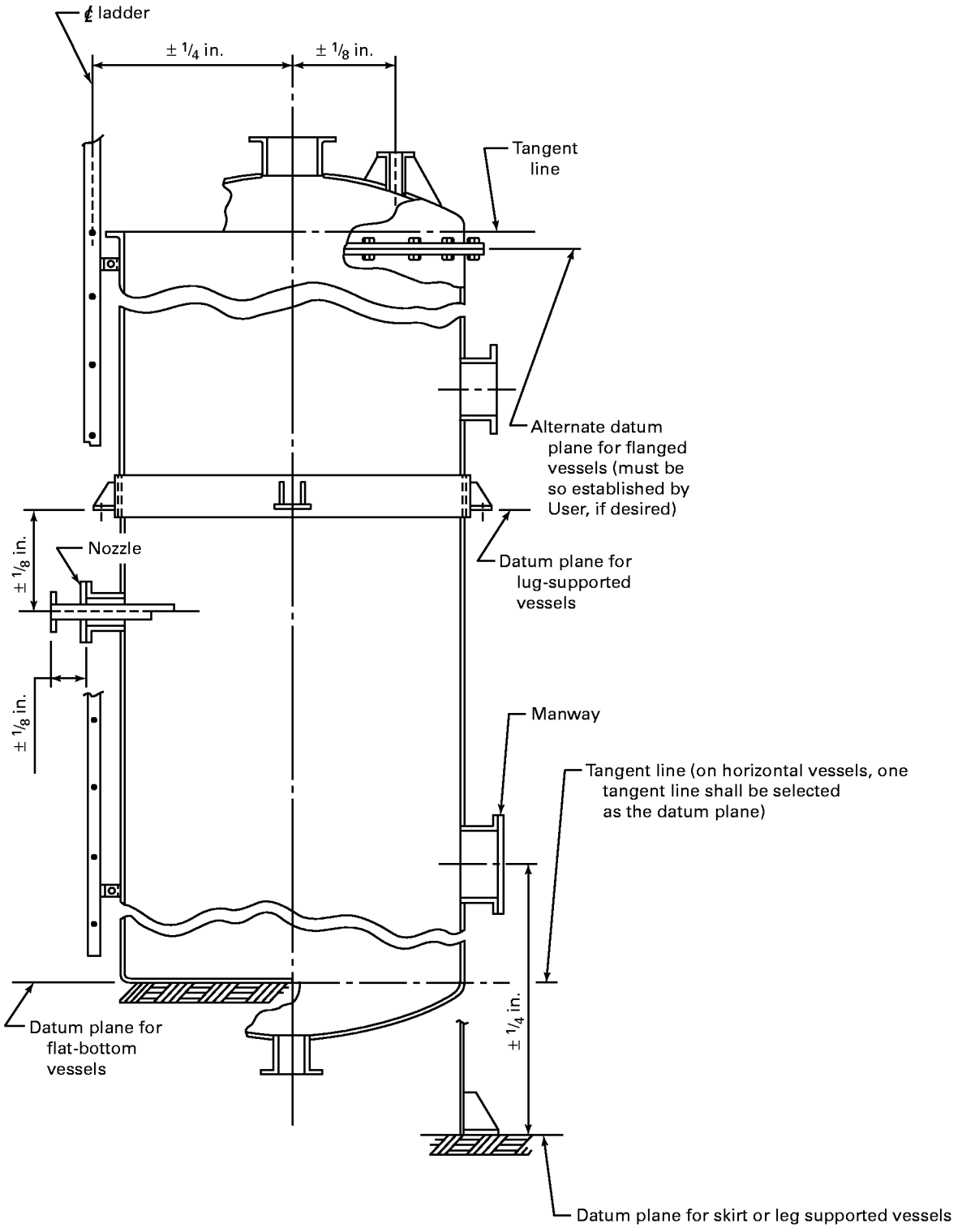


**FIG. NM7-1 RECOMMENDED FABRICATION TOLERANCES**



--`,,`,,`-`-`,,`,,`,`,,`---

Copyright ASME International
Provided by IHS under license with ASME
No reproduction or networking permitted without license from IHS
Not for Resale

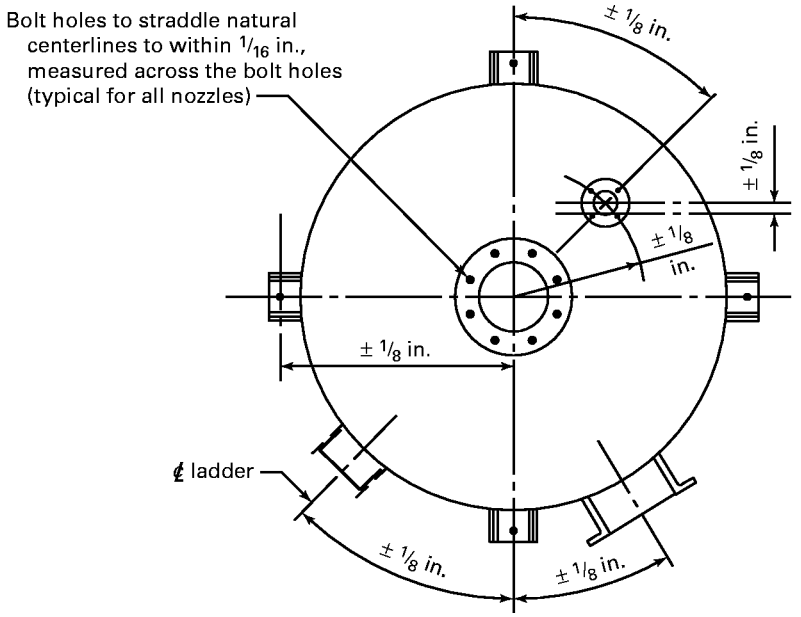


Orientation: all nozzles and lugs shall be held from reference points ± 1/8 in.

GENERAL NOTES:

(a) The dimensional tolerance from the datum plane to any point on equipment (i.e., nozzle centerline) or other component shall be ± 1/8 in.

(b) The orientation of flange faces, measured from outside edge to outside edge across the face, shall not deviate from the established planes of orientation by more than the following tolerances:

| Nominal Nozzle Size | Tolerance |
|---|---|
| 6 in. and less | 1/16 in. |
| 8 in. to 16 in. | 3/32 in. |
| 18 in. and over | 1/8 in. |
| Manway | 1/4 in. |

(c) The following are special tolerances:

| Description | Tolerance |
|---|---|
| Face of nozzle to vessel sidewall | ± 1/8 in. |
| Face of manway to vessel sidewall | ± 1/4 in. |
| Face of head-mounted nozzles to datum plane: | |
| (1) Distances up to 60 in. | ± 1/4 in. |
| (2) Distances over 60 in. | ± 3/8 in. |
| Face of manway to vessel head | ± 1/4 in. |

**FIG. NM7-1 RECOMMENDED FABRICATION TOLERANCES (CONT'D)**



Copyright ASME International
Provided by IHS under license with ASME
No reproduction or networking permitted without license from IHS
Not for Resale

# NONMANDATORY APPENDIX NM-8
# HANDLING AND SHIPPING

## NM8-100 GENERAL

The techniques and procedures used for handling and preparing RTP vessels for shipping should ensure delivery of damage-free products.

The flexural, impact, and shear properties of RTP laminated structures are significantly lower than those of metallic structures. Therefore, special consideration must be given to weight and weight distribution at contact points during handling, shipping, and storage of RTP vessels.

If any doubt exists regarding the handling procedures, the Fabricator should be consulted.

## NM8-200 HANDLING

*(a)* Impact or excessive distortion can cause cracking or crazing of the laminate structure. Therefore, special consideration must be given to the following.

*(1)* It is recommended that RTP vessels be lifted for moving or repositioning and not be rolled, slid, dropped, or thrown.

*(2)* Where lifting lugs are not provided as part of the equipment, consideration should be given to the use of woven fabric rigger-slings of 3 in. minimum width for lifting cylindrical vessels in a horizontal position.

*(3)* Open-end equipment, such as open-top tanks, may require internal cross bracing or external structure, to prevent damage from distortion during handling and transporting.

*(4)* For lifting an uncrated and unskidded open-end vessel in a vertical position, a spreader bar should be used to prevent damage from excessive distortion (see Fig. NM8-1).

*(b)* Where a spreader bar is required for proper lifting, a stenciled notation to that effect should be applied to the equipment in a prominent location prior to shipping. Woven fabric rigger-slings of 3 in. minimum width and adequate strength should be used in direct contact for lifting RTP vessels.

*(c)* Where a vessel is to be lifted in a horizontal position by wrapping a cable around its circumference, wooden strongbacks of adequate strength and dimensions should be employed to distribute the load and prevent direct contact between the cable and the wall of the equipment (see Fig. NM8-2).

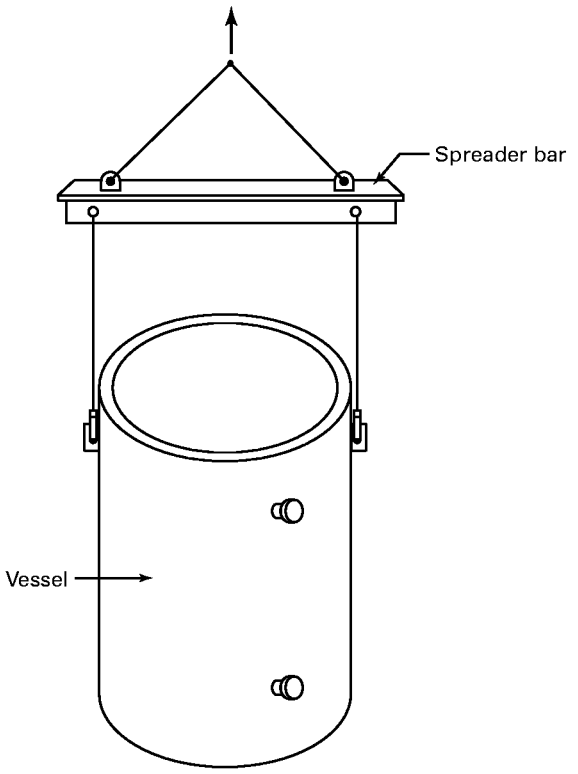


**FIG. NM8-1 LIFTING VESSEL WITH SPREADER BAR**

*(1)* Generally, where the *L/D* value is high and/or the laminate wall is thin, lifting attachments may be required at two points, each located *L*/4 from an end (see Fig. NM8-3).

*(2)* Where an unusually long or bulky vessel is involved, special handling procedures may be required to avoid damage.

*(3)* Lifting cables and/or straps must not be attached to or permitted to come in contact with nozzles, flanges, gussets, or accessories other than lifting lugs, unless specifically approved by the Fabricator.



Copyright ASME International
Provided by IHS under license with ASME
No reproduction or networking permitted without license from IHS
Not for Resale

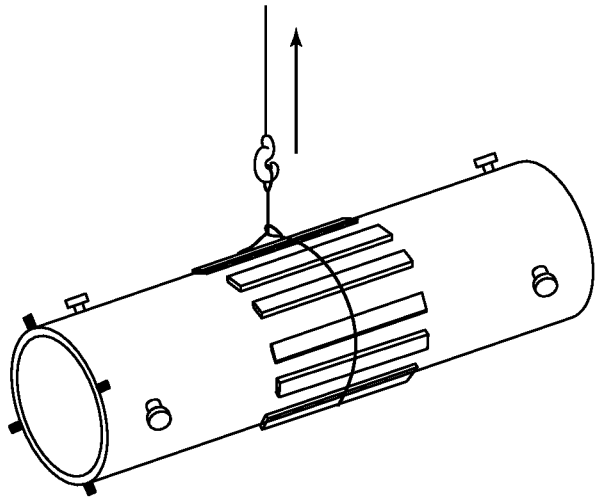

**FIG. NM8-2 STRONGBACK FOR LIFTING**

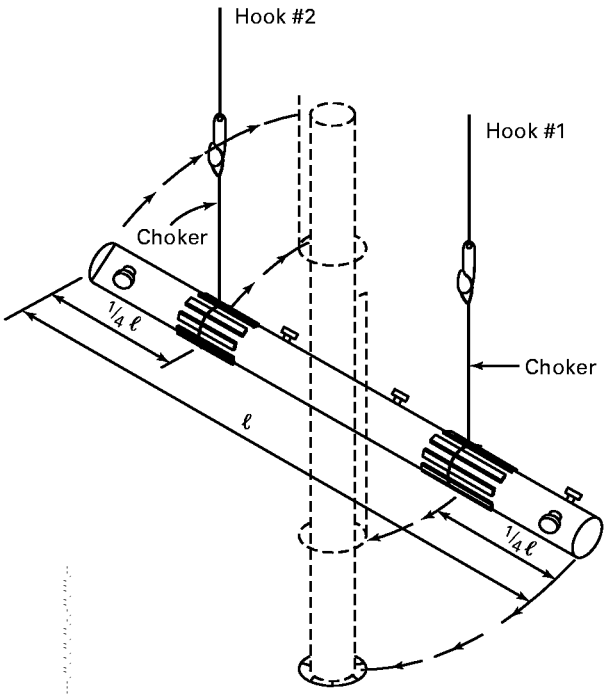


**FIG. NM8-3 USE OF STRONGBACKS**

*(4)* When a vessel is being lifted using a cable, a guideline should be attached to prevent impact damage caused by swing contact with other objects.

## NM8-300 TEMPORARY STORAGE

During storage or repositioning, RTP vessels should be left or placed on the shipping cradle or dunnage resting only on firm, level surfaces.

Vessels should not be permitted to rest on stones, tools, chocks, or other small hard objects.

When stored outdoors, vessels should be adequately tied down to prevent movement due to wind or water flotation. Closed vessels should not be completely sealed.

Where a large open-end vessel is stored in a horizontal position, bracing is required at the open end to prevent excessive distortion. One cross brace, with suitable padded end plates to distribute the load, should be installed perpendicular to the surface on which the vessel is resting.

## NM8-400 SHIPPING

*(a)* Cylindrical vessels that are being shipped in a horizontal position should be:

*(1)* mounted on padded cradles of 120 deg minimum arc and as wide in inches as the vessel measures in feet of diameter. The cradles should be placed as close as possible to the top and bottom heads of the vessel and/or other stiffened areas;

*(2)* secured to the truck or railroad car with padded banding straps that are properly fastened to the bed of the vehicle;

*(3)* blocked at the ends to prevent shifting in transit. The blocks should be padded and bear only on the knuckle radius of the flat or dished heads.

*(b)* Vessels being shipped in a vertical position should be secured to a pallet or skid, and then fastened to the bed of the vehicle with padded banding for safe shipment.

*(c)* Vessels should be secured on the vehicle with $1\frac{1}{2}$ in. or more clearance between the vessel (including external fittings, nozzles, or other projections) and the bed of the truck or railcar. Small vessels may be shipped on pallets or skids to permit forklift truck handling.

*(d)* When two or more separate units are shipped together, sufficient clearance should be provided between units to prevent contact in transit.

*(e)* Flange faces 48 in. and under should be protected by fully covering the flange and opening with suitable plywood or waterproof hardboard, securely fastened. In sizes larger than 48 in., only the flange faces need to be covered.

*(f)* Pipe ends and nozzles should be protected by plastic caps, plywood, hardboard, or water-resistant cardboard covering, securely fastened.



Copyright ASME International
Provided by IHS under license with ASME
No reproduction or networking permitted without license from IHS
Not for Resale

*(g)* All internals should be adequately secured and/or padded to ensure safe shipment.

*(h)* Accessory pipe, fittings, and miscellaneous small parts should be crated or boxed. Additional protection within the crate or box may be required to assure that pieces are not damaged. Such protection might include cross bracing, end wrapping, and/or batten padding. Boxes are to be identified as to contents and purchase order number, or as otherwise required by the User.

*(i)* Crates or boxes exceeding 50 lb gross weight should be mounted on skids or pallets to permit handling by crane or forklift truck.

*(j)* Crates or boxes should be secured to the vehicle. All crates, boxes, skids, and pallets should be made of quality lumber and selected fasteners (nails, bolts, lag screws, etc.) that will be sufficient to ensure safe handling and transit of the vessel.



Copyright ASME International
Provided by IHS under license with ASME
No reproduction or networking permitted without license from IHS
Not for Resale

# NONMANDATORY APPENDIX NM-9
# INSTALLATION OF RTP VESSELS

## NM9-100 SCOPE

This Appendix provides information pertaining to the installation of RTP vessels.

## NM9-200 RECEIVING INSPECTION

Prior to removal from the truck, trailer, railcar, or shipping container, the vessel should be inspected to determine if damage has been incurred during transit. Where damage is observed, the carrier's representative should be notified immediately. The unloading operation should be delayed until the carrier's representative has completed his or her inspection of the damaged vessel; otherwise, a damage claim may not be honored. The inspection should include a complete check for:

*(a)* external surface damage such as cuts, penetrations, delaminations, or fractured areas;

*(b)* nozzle damage such as broken nozzles or flanges, or gouged flange faces;

*(c)* internal surface damage such as crazing (white areas with star-shaped surface cracks);

*(d)* vessel damage at contact points of dunnage, cradles, chocks, or hold-down strap bands.

## NM9-300 INSTALLATION OF RTP VESSELS

*(a)* During storage or repositioning, RTP vessels should be placed only on firm level surfaces that are free of stones, tools, and other small hard objects, since contact with such objects can cause localized damage.

*(b)* The support base surface should be nonporous and free of cracks, depressions, and vertical projections. Reinforced concrete, trowel finished to American Concrete Institute specifications (ACI-301-72, Section 11.7.3, "Trowel Finish"), is often used as a support base. The support base should be flat to within $\frac{1}{4}$ in. of a horizontal plane. Local irregularities should not exceed $\frac{1}{4}$ in. Sloping bases shall be equally flat.

*(c)* Each flat-bottom vessel should be set on a cushioning pad to minimize stress caused by seams, shrinkage distortion, and/or support base or vessel bottom irregularities. This pad should be $\frac{1}{2}$ in. thick, closed cell elastomeric sponge material of suitable composition and compression deflection range of 5 psi to 9 psi, resin or cement grout, petroleum-base mastic/sand mortar, or other suitable conforming material that will cushion the vessel bottom over surface irregularities of the support base or vessel bottom.

*(d)* Where a vessel has a bottom drain, provisions should be made in the support base with clearances so that contact will not occur between the support base and nozzles or nozzle flanges.

*(e)* Where a trench in a support base is required to accommodate bottom discharge piping, a structural trench cover should be installed flush with the top of the support base to minimize the unsupported area of the vessel bottom.

*(f)* All flat-bottom vessels should be secured in place by bolting to the support base through hold-down lugs. This precaution will minimize the chance of vessel damage at nozzle locations and areas of other attachment due to movement of the unit.

*(g)* All vessel nozzles below the liquid level should be joined to piping through a flexible connection or flexible piping system.

*(h)* Valves that are attached to vessel nozzles should be independently supported so that the weight of the valve or the force of closing and opening of a valve does not transmit the total torque load directly to the nozzle.

*(i)* Flanged connections should be made in accordance with the Fabricator's recommendations. Where the Fabricator's recommendations are not available and where a flanged pipe or fitting is attached to a vessel nozzle with a full-face flange:

*(1)* Full-face gaskets are to be used, per Fig. NM9-1. If the mating flange has a raised face, it should be machined flat or a filler ring of the proper thickness should be applied to provide a full flat surface for contact, per Fig. NM9-2. Gasket material with hardness exceeding 65 durometer (Shore A) should not be used.

*(2)* Metal washers should be used under all bolt heads and nuts that would otherwise be in contact with the RTP flanges.

*(3)* All flanges should be back spot faced.



Copyright ASME International
Provided by IHS under license with ASME
No reproduction or networking permitted without license from IHS

Not for Resale

*(4)* Nut and bolt threads should be lubricated before tightening.

*(5)* Bolting take-up torque should be applied uniformly and in accordance with the sequence shown in Fig. NM9-3. Since the working pressure of a vessel covered by ASME RTP-1 does not exceed 15 psig, limit bolt tightening torque to the values shown in Fig. NM9-3.

*(6)* Where vertical or side entering agitation equipment is to be attached directly to a vessel, design is required that is specific to that equipment and that application. Side entering agitators should be independently supported.

*(7)* Where heating apparatus (electrical tape, coils, or sparger) is to be installed, specific detailed design of this equipment and its installation or attachment arrangements should be approved by the vessel designer.

## NM9-400 GENERAL SERVICE REQUIREMENTS

Provisions should be made to prevent vessel contents from freezing.

Positive venting arrangements should be provided. A backup safety system, such as a conservation vent, is recommended.

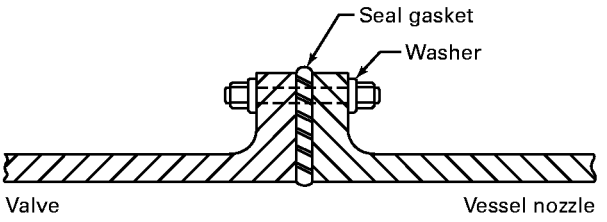


**FIG. NM9-1 FLAT-FACE VALVE FLANGE TO FLAT-FACE RTP NOZZLE FLANGE AND FULL-FACE GASKET**

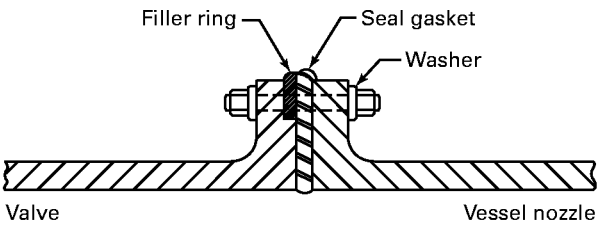


**FIG. NM9-2 RAISED-FACE VALVE FLANGE TO FLAT-FACE RTP NOZZLE FLANGE WITH FILLER RING AND FULL-FACE GASKET**

Provisions should be made to protect the vessel from external damage such as due to vibration and impact.



Copyright ASME International
Provided by IHS under license with ASME
No reproduction or networking permitted without license from IHS
Not for Resale

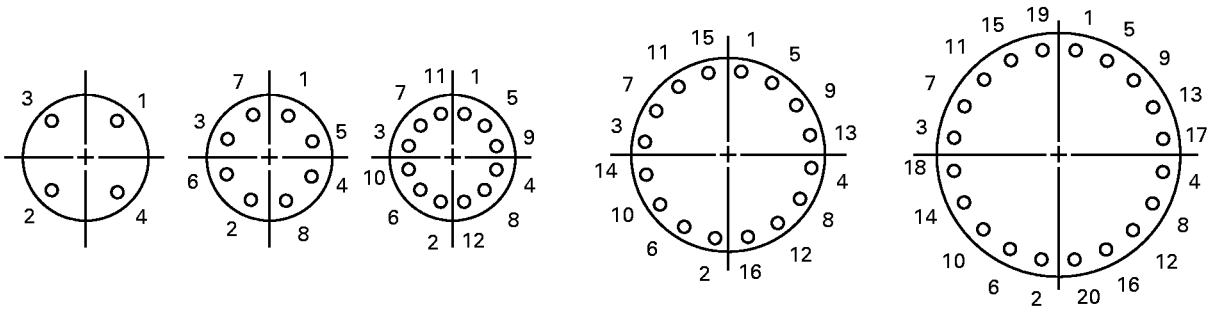


**Bolt Torquing Sequence**

Recommended Bolt Torques for Hand Lay-Up Flanges

| Pipe Size | Bolt Dia. | Torque, ft-lb |
|---|---|---|
| 2 | 5/8 | 25 |
| 3 | 5/8 | 25 |
| 4 | 5/8 | 25 |
| 6 | 3/4 | 25 |
| 8 | 3/4 | 25 |
| 10 | 7/8 | 25 |
| 12 | 7/8 | 25 |
| 14 | 1 | 30 |
| 16 | 1 | 30 |
| 18 | 1 1/8 | 35 |
| 20 | 1 1/8 | 35 |
| 24 | 1 1/4 | 40 |
| Manways | 3/4 | 30 |

GENERAL NOTES:
(a) With Felpro C5A thread lubricant or equal.
(b) For machine-made pipe flanges, see manufacturer's instructions.

**FIG. NM9-3 FLANGE BOLT TIGHTENING**



--`,,,`,,-`-`,,`,,`,`,,`---

Copyright ASME International
Provided by IHS under license with ASME
No reproduction or networking permitted without license from IHS

Not for Resale

# NONMANDATORY APPENDIX NM-10
# REQUIREMENTS AND RESPONSIBILITIES OF USER (OR USER'S AGENT), FABRICATOR, AND INSPECTOR

## NM10-100 SCOPE AND PURPOSE

*(a)* The purpose of this Appendix is to provide a convenient reference to the major responsibilities and requirements as defined by this Standard for Users, Fabricators, and Inspectors. See Fig. NM10-1 for an RTP-1 flowchart.

*(b)* Whereas a summary statement of each requirement or responsibility is provided, the full text of each referenced paragraph provides details that are essential to proper understanding.

*(c)* Any omissions (possibly due to revisions, addenda, oversight, etc.) do not relieve any party from full responsibility for compliance with all requirements contained in the text of the Standard and addenda.

## NM10-200 USER (OR USER'S AGENT)

The *User* (or *User's Agent*) is the organization for which the equipment is being fabricated.

| Paragraph | Requirements and Responsibilities (A Summary Statement) |
|---|---|
| 1-200 | Provide UBRS (Table 1-1). Must specify the resin to be used or thoroughly define the chemical environment of the vessel. |
| 1-210 | Specify if the service is critical |
| 1-220 | Specify whether AE testing or postcuring is required. Consider and define special safeguards for the installation and operation of critical service vessels. |
| 1-400 | With the Fabricator, select the Inspector prior to start of fabrication |
| 1-530 | Designate the nameplate location prior to the approval of Fabricator's drawings |
| 2-310 | Specify the resin, the use of thixotropic agents, and/or fire-retardant synergists |
| 2A-224 | Specify use of exterior veil, ultraviolet protection, or pigmentation, if required |
| 3-100 | If desired, specify option of design methodology (Subpart 3A, Subpart 3B, or both) |
| 3A-600 | Select attachment materials |
| 5-200 | Specify and install overpressure protection device(s) |
| 6-100 | Specify inspections beyond those required by this Standard |
| 6-940(d) | When exterior pigmentation or insulation is specified, agree on visual inspection methods and arrange for a proper schedule |
| 6-950(c) | Prior to the start of fabrication, establish the pressure to be used if a vacuum test is required |
| NM3-100 | Specify the code to be used for seismic, wind, and snow loads |
| NM7-100 | Establish the acceptance criteria for inspection to any special User requirements |
| NM7-400(d) | Reference dimensional tolerance from Fig. NM7-4 in the purchase contract or UBRS if these tolerances are to govern the fabrication |
| NM7-500 | Consult with the Fabricator about quantity limitations on gaseous bubbles or blisters and agree on any limitations to be included in the purchase specifications |
| App. NM-9 | Ensure that the shipping, rigging, storing, and installation instructions are followed. |

## NM10-300 FABRICATOR

The *Fabricator* is the producer of RTP equipment. The Fabricator combines resin and reinforcing fibers to produce the final product.

| Paragraph | Requirements and Responsibilities (A Summary Statement) |
|---|---|
| 1-300 | Prepare the Fabricator's Design Report certified by a Professional Engineer |
| 1-440 | Provide plant access for the Inspector. Coordinate fabrication progress and inspection schedules with the Inspector. |
| 1-520 | Complete certification of compliance to the Standard. Complete Fabricator's Data Report. |
| Subparts 2A–2C | Develop design basis laminates |
| 6-300(a)–(h) | Prepare a written Quality Control Manual. Provide all documents to the Inspector as required. Assist the Inspector by providing all necessary tools, test equipment, manpower, etc. |
| 6-400 | Assure that the vessel is in proper entry condition for inspection |
| 6-900(a), (c) | Provide final inspection documents to the Inspector |
| 6-910(a), (c) | Make all necessary checks to assure proper resin cure |
| 6-920(a) | Verify dimensions and laminate thickness |
| 6-930(a), (b), (d) | Assure laminate mechanical properties and laminate reinforcement content and sequence are |



Copyright ASME International
Provided by IHS under license with ASME
No reproduction or networking permitted without license from IHS
Not for Resale

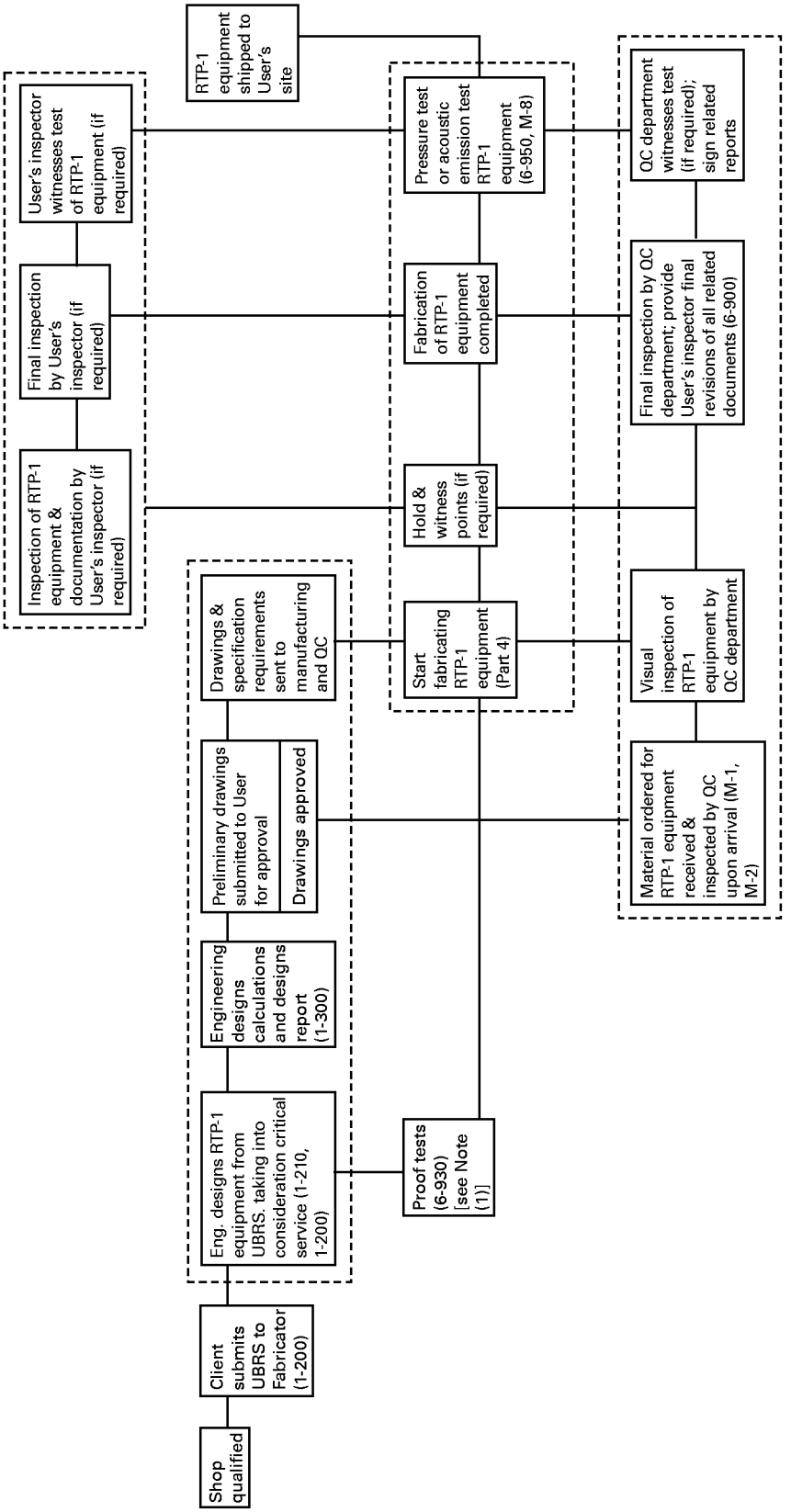


GENERAL NOTES:
(a) Should equipment require repairs during fabrication, repairs shall be performed in accordance with Appendix M-7 (Repair Procedures).
(b) Copies of the original Data Reports shall be sent to the User (or the User's agent).

NOTE:
(1) Proof tests are mandatory for all vessels built to the RTP-1 Standard having an internal or external design pressure equal to or exceeding 2 psig.

**FIG. NM10-1 RTP-1 FLOWCHART**



Copyright ASME International
Provided by IHS under license with ASME
No reproduction or networking permitted without license from IHS
Not for Resale

| | |
|---|---|
| | in accordance with design. Proof test laminates when required by para. 6-930(d) (based on design pressure). |
| 6-940 | Make all checks necessary to assure that laminate imperfections are within the requirements of this Standard |
| 6-950(a)–(e) | Perform pressure tests |
| 7-100 | Meet all requirements as outlined in this Standard for shop qualification |
| App. M-1, Articles A–D | Perform inspection and test for reinforcement materials received |
| App. M-2, Articles A–E | Perform inspection and tests on resins and curing agents |
| App. M-2, Article G | Perform inspection on common additives |
| M4-100 | Prepare and maintain a Quality Control Program |
| M5-200 | Train and qualify Laminators and Secondary Bonders |
| M6-100 | Design, fabricate, and test a demonstration vessel |
| App. M-7 | Develop repair procedures in accordance with requirements in that Appendix. Correct all nonconformities in vessels. |
| NM7-300 | Comply with all special purchase order requirements, specifications, instructions, or drawings |

## NM10-400 INSPECTOR

*Inspector* (with upper case "I") is defined in para. 1-400.

| Paragraph | Requirements and Responsibilities (A Summary Statement) |
|---|---|
| 1-430 | Verify that requirements of this Standard have been met and that design has been reviewed and certified by a Professional Engineer. Perform all specific inspections as required by this Standard. |
| 1-440 | Make arrangements with the Fabricator for timely inspections |
| 1-520(c) | Sign Fabricator's Data Report (or Partial Data Report) |
| 6-300(b), (e) | Inspect any subassemblies or components fabricated by a Subcontractor of the Fabricator. Verify that the Fabricator's Quality Control Program is in effective operation. Make such specific inspections and tests as are required by this Standard; provide a complete report including all data as required in paras. 6-910 through 6-960. |
| 6-300(i) | Sign the Certificate of Inspection on the Fabricator's Data Report |
| 6-500 | Examine Fabricator's design record and report. Verify that the vessel conforms to the latest revision of approved drawings and the UBRS. Verify that the Fabricator's Design Report has been certified by a registered Professional Engineer. |
| 6-600 | Verify that the materials used in fabrication comply with the requirements of this Standard and the UBRS |
| 6-700 | Establish hold points and verify fabrication. At completion of each hold point, Inspector shall report results and highlight any discrepancies requiring corrective action. |
| 6-900(a) | Review the final revision of documents at the time of final inspection |
| 6-900(d) | Summarize inspection in a brief report and submit the report to the Fabricator |
| 6-900(e) | Sign and date the Certificate of Compliance |
| 6-910(b), (d) | Verify proper use, formulation, and cure of resin (hardness and acetone) |
| 6-920 | Verify thickness and dimensional data |
| 6-930 | Verify reinforcing sequence either by visual or by burnout tests as required. Review Proof Tests data and verify that it meets the requirements as stated therein. |
| 6-940 | Ascertain the proper Visual Inspection Level of the laminate and conduct the visual inspection |
| 7-500(c) | Verify that the Fabricator's record keeping system satisfies the requirements of this Standard |
| M5-300(e) | Require requalification of Laminator(s) if ability becomes questionable |
| M5-450(c) | Require requalification of Secondary Bonder(s) if ability becomes questionable |
| M7-210(c) | Review and approve all repair procedures in advance |
| M7-210(f) | Reinspect all repairs to ensure compliance with this Standard |
| M8-200(c) | Witness acoustic emission test (if required) and verify the acoustic emission examination report |



Copyright ASME International
Provided by IHS under license with ASME
No reproduction or networking permitted without license from IHS
Not for Resale

# NONMANDATORY APPENDIX NM-11
# DESIGN FOR 250 lb CONCENTRATED LOAD ON A TORISPHERICAL HEAD

## NM11-100 SCOPE

This Appendix provides a procedure for calculating the thickness of a torispherical top head that satisfies para. 3A-340. The procedure is limited to heads that satisfy para. 3A-230, and whose inside diameter is not more than 144 in. The inside diameter of a torispherical head is defined as the inside diameter of the cylindrical shell to which it is attached.

## NM11-200 NOMENCLATURE

The following symbols are used in the equations for calculating the stress in the head:

$F$ = design factor
$G$ = stress function, lb
$P$ = design pressure, psi (the sign of $P$ is positive if the design pressure is internal and negative if the design pressure is external)
$R$ = inside radius of the crown of the head, in.
$S_u$ = ultimate tensile strength of the laminate, psi
$S_1$ = stress on the upper surface of the head, psi
$S_2$ = stress on the lower surface of the head, psi
$t$ = thickness of the crown, in.

## NM11-300 DESIGN FACTOR

If the 250 lb load is intermittent and temporary, the design factor $F=5$; otherwise, $F=10$.

## NM11-400 STRESS CALCULATIONS

*(a) Upper Surface.* The stress on the upper surface of the head is checked as follows:

*(1)* Calculate $(Rt)^{0.5}$.

*(2)* Enter Fig. NM11-1 with the value from subpara. (1) above and obtain a value for $G$ from the curve for the upper surface. The negative sign denotes that the stress is compressive.

*(3)* Calculate the stress $S_1 = G/t^2$.

*(4)* The absolute value of $S_1$ must be less than or equal to $S_u/F$.

*(5)* If the design pressure is external, the absolute value of the quantity $S_1 + PR/t$ must also be less than or equal to $S_u/F$.

*(6)* If either of the conditions in subpara. (4) or (5) above is violated, increase $t$ and repeat subparas. (1) through (5).

*(b) Lower Surface.* The stress on the lower surface may be checked as follows:

*(1)* Enter Fig. NM11-1 with the value of $(Rt)^{0.5}$ from subpara. (a)(1) above, and obtain a value for $G$ from the curve for the lower surface.

*(2)* Calculate the stress $S_2 = G/t^2$.

*(3)* $S_2$ must be less than or equal to $S_u/F$.

*(4)* If the design pressure is internal, the quantity $S_2 + PR/t$ must also be less than or equal to $S_u/F$.

*(5)* If either of the conditions in subpara. (3) or (4) above is violated, increase $t$ and repeat subparas. (1) through (4).



Copyright ASME International
Provided by IHS under license with ASME
No reproduction or networking permitted without license from IHS
Not for Resale

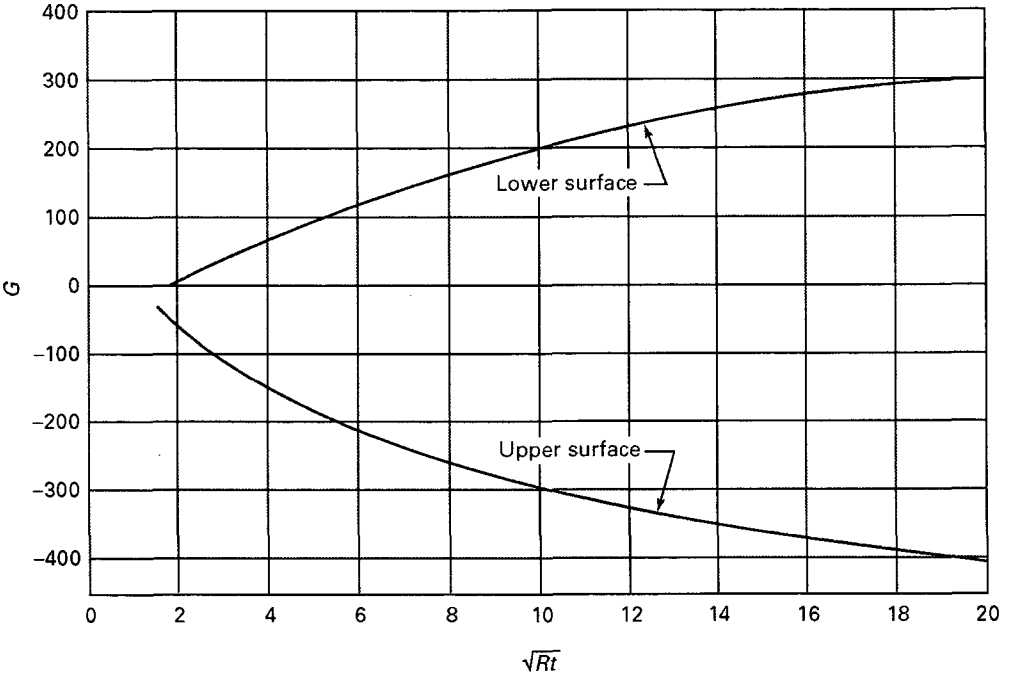


**FIG. NM11-1 STRESS FUNCTION**



Copyright ASME International
Provided by IHS under license with ASME
No reproduction or networking permitted without license from IHS

Not for Resale

# NONMANDATORY APPENDIX NM-12
# FRP FLANGE DESIGN

## NM12-100 SCOPE

This Appendix provides a design procedure applicable to full-face flanges for nozzles, manways, vessel body flanges, and duct flanges. The procedure is intended for FRP flanges where the lay-up of the hub and flange form an integral bond with the shell wall or where a pipe stub, flange, and hub are made as an integral unit. The procedure is based on controlling the bending stress in the flange from the gasket pressure during bolt up and from the operating loads. Bolt loading is calculated to ensure gasket seating and to maintain gasket pressure under the operating conditions. Maximum and minimum bolt torques are calculated to ensure that sufficient load is applied to seat the gasket and to ensure that the flange is not overstressed. Hub clearances and edge clearances are calculated and compared to minimum clearances to ensure that there is sufficient room for the bolts and that the bolts are not too close to the outer edge of the flange.

## (b) NM12-200 NOMENCLATURE

The following symbols are used in the formulas for the design of flat-face flanges:

$B.C.D.$ = bolt circle diameter, in.
$b_s$ = bolt spacing, in.
$D_b$ = diameter of bolts, in.
$e_c$ = edge clearance, in.
$h_c$ = hub clearance, in.
$h_h$ = hub height, in.
$h_t$ = hub thickness, in.
$I.D.$ = inside flange diameter, in.
$m$ = gasket factor = 0.5
$N$ = number of bolts in flange
$n_t$ = nozzle wall thickness, in.
$O.D.$ = outside flange diameter, in.
$P$ = internal design pressure, psi
$P_a$ = axial load on flange, lb
$T_{max}$ = maximum bolt torque, ft-lb
$T_{min}$ = minimum bolt torque, ft-lb
$t_g$ = flange thickness required to seat gasket, in.
$t_o$ = flange thickness under operating loads, in.

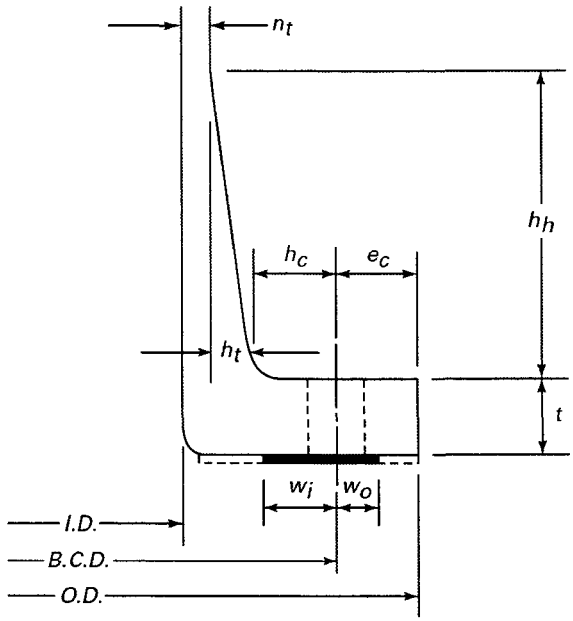


**FIG. NM12-1 FLANGE DIMENSIONING DETAILS**

$y$ = gasket seating stress = 50 psi
$\sigma_b$ = design bolt tensile stress, psi
$\sigma_{bf}$ = bolt stress at flange design stress, psi
$\sigma_{bg}$ = bolt stress required to seat gasket, psi
$\sigma_{bm}$ = larger of $\sigma_{bg}$ and $\sigma_{bo}$
$\sigma_{bo}$ = bolt stress under operating loads, psi
$\sigma_f$ = design flange flexural stress, psi
$\sigma_n$ = design nozzle wall tensile stress, psi

## NM12-300 CALCULATION PROCEDURE

Calculate the following initial design parameters (refer to Figs. NM12-1 and NM12-2):

$A_b$ = bolt root area
= $0.25\pi(0.91D_b - 0.055)^2$
$a_1$ = moment arm for axial load, in.
= $0.5(B.C.D. - I.D. - n_t)$
$a_2$ = moment arm for pressure load, in.
= $1.5w_i$



Copyright ASME International
Provided by IHS under license with ASME
No reproduction or networking permitted without license from IHS

Not for Resale

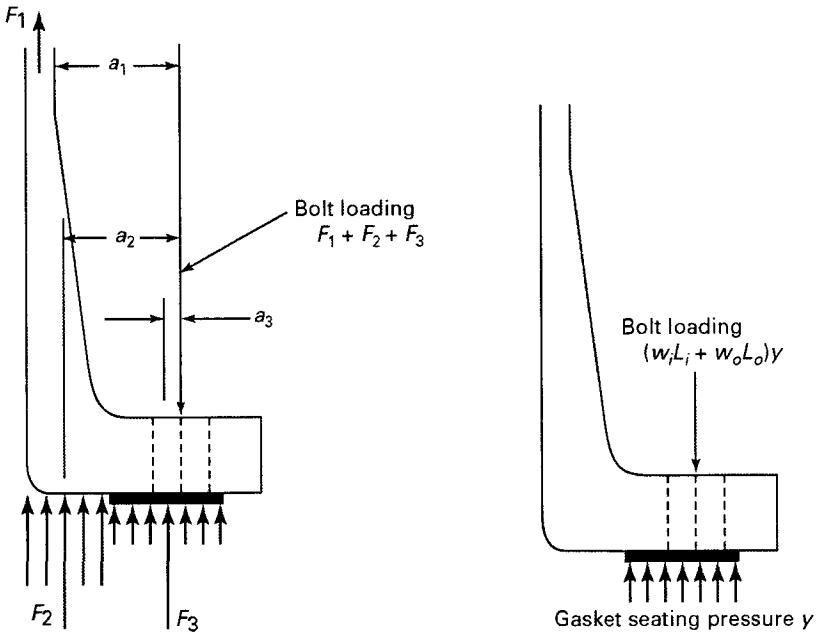


(a) Operating Loads

(b) Gasket Seating Load

**FIG. NM12-2 FLANGE LOADING CONDITIONS**

$a_3$ = moment arm for gasket load, in.
= $0.5(w_o + w_i) - w_o$
$F_1$ = axial load on flange, lb
= $P_a + 0.25\pi(I.D.)^2P$
$F_2$ = pressure load inside gasket, lb
= $\pi w_i(I.D. + w_i)P$
$F_3$ = load from gasket compression, lb
= $(w_oL_o + w_iL_i)mP$
$L_e$ = effective bolt circle length
= $\pi B.C.D. - N(D_b + 0.125)$
$L_i$ = length of inside effective gasket
= $\pi(B.C.D. - w_i)$
$L_o$ = length of outside effective gasket
= $\pi(B.C.D. + w_o)$
$w_i$ = effective gasket width inside *B.C.D.*
= $0.25(B.C.D. - I.D.)$
$w_o$ = effective gasket width outside *B.C.D.*
= $0.25(O.D. - B.C.D.)$

## NM12-310 Nozzle Wall Thickness

Calculate the nozzle wall thickness for internal pressure and for the axial load:

$$n_p = P\frac{I.D.}{2\sigma_n}$$

$$n_a = \frac{P_a}{\pi I.D.\sigma_n}$$

The required nozzle wall thickness $n_t$ is the larger of $n_p$ and $n_a$.

## NM12-320 Gasket Seating Loads

Calculate the bolt stress and flange thickness required to seat the gasket:

$$\sigma_{bg} = \frac{(w_oL_o + w_iL_i)y}{NA_b}$$

$$t_g = \sqrt{\frac{3y}{L_e\sigma_f}(w_o^2L_o + w_i^2L_i)}$$

## NM12-330 Design Operating Loads

Calculate the bolt stress and flange thickness required for the operating conditions:

$$\sigma_{bo} = \frac{F_1 + F_2 + F_3}{NA_b}$$

$$t_o = \sqrt{\frac{6(F_1a_1 + F_2a_2 + F_3a_3)}{L_e\sigma_f}}$$



Copyright ASME International
Provided by IHS under license with ASME
No reproduction or networking permitted without license from IHS
Not for Resale

### NM12-340 Flange Thickness

The required flange thickness $t$ is then the greater of $t_g$ and $t_o$, and the bolt stresses must be less than the design bolt stress.

### NM12-350 Minimum Bolt Torque

Using the larger of the two bolt stresses, calculate the minimum bolt torque (ft-lb) required:

$$\sigma_{bm} = \text{larger of } \sigma_{bg} \text{ and } \sigma_{bo}$$

$$T_{min} = \frac{\sigma_{bm} A_b D_b}{60}$$

### NM12-360 Maximum Bolt Torque

Using the required flange thickness, calculate the maximum bolt torque (ft-lb) that the flange can withstand and the maximum bolt torque the bolt can withstand:

$$\sigma_{bf} = \frac{L_e t^2 \sigma_f (w_o L_o + w_i L_i)}{3NA_b (w_o^2 L_o + w_i^2 L_i)}$$

$$T_f = \frac{\sigma_{bf} A_b D_b}{60}$$

$$T_b = \frac{\sigma_b A_b D_b}{60}$$

The maximum bolt torque $T_{max}$ is the lowest value of $T_f$ and $T_b$.

### NM12-370 Hub Thickness and Height

Calculate the hub thickness and height:

$h_t = 0.5t$ = minimum hub thickness

$h_h = 6h_t$ = minimum hub height

### NM12-380 Bolt Spacing and Clearances

Calculate bolt spacing and clearances:

$b_s$ = bolt spacing, in.
= $\pi B.C.D./N$

$b_{s\,max}$ = maximum bolt spacing, in.
= $2D_b + 6t$

$e_c$ = edge clearance, in.
= $2w_o$

$e_{c\,min}$ = minimum edge clearance, in.
= $0.917D_b + 0.167$

$h_c$ = hub clearance, in.
= $2w_i - n_t - h_t$

$h_{c\,min}$ = minimum hub clearance, in.
= $1.125D_b + 0.3$

Clearances and bolt spacing must be within the limits calculated. When the hub clearance is less than the minimum, the flange will require spot facing to provide sufficient clearance for bolting.

### NM12-400 FLANGE DESIGN EXAMPLE (b)

This flange design example is for a 24 in. internal diameter flange to be operated under a pressure of 50 psi. The operating pressure is the sum of the internal pressure in the vessel plus the hydrostatic liquid head above the flange elevation. The relevant flange dimensions comparable to Class 150 welded neck flanges and the other design parameters are as follows:

$B.C.D.$ = 29.5 in.
$D_b$ = 1.25 in.
$I.D.$ = 24 in.
$m$ = 0.5
$N$ = 20 bolts
$O.D.$ = 32 in.
$P$ = 50 psi
$y$ = 50 psi
$\sigma_b$ = 20,000 psi
$\sigma_f$ = 3,000 psi
$\sigma_n$ = 1,500 psi

Calculate the following parameters:

$A_b = 0.25\pi(0.91D_b - 0.055)^2 = 0.92$
$w_i = 0.25(B.C.D. - I.D.) = 1.375$
$w_o = 0.25(O.D. - B.C.D.) = 0.625$
$a_1 = 0.5(B.C.D. - I.D. - n_t) = 2.55$ in.
$a_2 = 1.5w_i = 2.063$ in.
$a_3 = 0.5(w_o + w_i) - w_o = 0.375$ in.
$L_e = \pi B.C.D. - N(D_b + 0.125) = 65.177$
$L_i = \pi(B.C.D. - w_i) = 88.357$
$L_o = \pi(B.C.D. + w_o) = 94.64$
$F_1 = P_a + 0.25\pi(I.D.)^2 P = 22{,}619$ lb
$F_2 = \pi w_i(I.D. + w_i)P = 5{,}481$ lb
$F_3 = (w_o L_o + w_i L_i)mP = 4{,}516$ lb
$n_p = P(I.D.)/2\sigma_n = 0.4$ in.

Calculate the bolt stress and flange thickness required to seat the gasket:

$$\sigma_{bg} = \frac{(w_o L_o + w_i L_i)y}{NA_b} = 491 \text{ psi}$$

$$t_g = \sqrt{\frac{3y}{L_e \sigma_f}(w_o^2 L_o + w_i^2 L_i)} = 0.396 \text{ in.}$$



Copyright ASME International
Provided by IHS under license with ASME
No reproduction or networking permitted without license from IHS
Not for Resale

Calculate the bolt stress and flange thickness required for the operating conditions:

$$\sigma_{bo} = \frac{F_1 + F_2 + F_3}{NA_b} = 1{,}772 \text{ in.}$$

$$t_o = \sqrt{\frac{6(F_1a_1 + F_2a_2 + F_3a_3)}{L_e\sigma_f}} = 1.47 \text{ in.}$$

The required flange thickness is the larger of $t_g$ and $t_o$; therefore, $t = 1.47$ in. and is controlled by the operating loads.

Using the larger of the two bolt stresses from above, calculate the minimum bolt torque required:

$$T_{min} = \frac{\sigma_{bm}A_bD_b}{60} = 34 \text{ ft-lb}$$

Using the flange thickness from above, calculate the maximum bolt torque that the flange can withstand and the maximum bolt torque the bolt can withstand:

$$\sigma_{bf} = \frac{L_e t^2 \sigma_f (w_oL_o + w_iL_i)}{3NA_b(w_o^2L_o + w_i^2L_i)} = 6{,}800 \text{ psi}$$

$$T_f = \frac{\sigma_{bf}A_bD_b}{60} = 130 \text{ ft-lb}$$

$$T_b = \frac{\sigma_bA_bD_b}{60} = 383 \text{ ft-lb}$$

The maximum bolt torque is the lesser of these two values; therefore, $T_{max} = 130$ ft-lb and is controlled by the stress in the flange.

The hub thickness and height are:

$$h_t = 0.5t = 0.74 \text{ in.}$$

$$h_h = 6h_t = 4.4 \text{ in.}$$

Calculate clearances and bolt spacing:

$$h_c = 2w_i - n_t - h_t = 1.61 \text{ in.}$$

$$h_{c\,min} = 1.125D_b + 0.3 = 1.70 \text{ in.}$$

$$e_c = 2w_o = 1.25 \text{ in.}$$

$$e_{c\,min} = 0.917D_b + 0.167 = 1.31 \text{ in.}$$

$$b_s = \frac{\pi B.C.D.}{N} = 4.63 \text{ in.}$$

$$b_{s\,max} = 2D_b + 6t = 11.34 \text{ in.}$$

In this case, the hub clearance and the edge clearance are slightly less than the recommended minimum, but are considered adequate, and spot facing will be required on the back face of the flange to provide washer clearance.



Copyright ASME International
Provided by IHS under license with ASME
No reproduction or networking permitted without license from IHS
Not for Resale

# NONMANDATORY APPENDIX NM-13
# STRESS ANALYSIS METHODS

## ARTICLE A
## ANALYSIS OF CYLINDRICAL SHELLS

### NM13A-100 SIGN CONVENTION AND NOMENCLATURE

The symbols and sign convention adopted in this Article for the analysis of cylindrical shells are defined as follows:

$D$ = $Et^3/12\ (1 - \nu^2)$, lb-in.
$E$ = modulus of elasticity, psi
$L$ = length of cylinder, in.; subscript to denote evaluation of a quantity at end of cylinder removed from reference end
$M$ = longitudinal bending moment per unit length of circumference, in.-lb/in.
$o$ = subscript to denote evaluation of a quantity at reference end of cylinder, $x = 0$
$p$ = internal pressure, psi
$Q$ = radial shearing forces per unit length of circumference, lb/in.
$R$ = inside radius, in.
$S$ = stress intensity, psi
$t$ = thickness of cylinder, in.
$w$ = radial displacement of cylinder wall, in.
$x$ = axial distance measured from the reference end of cylinder, in.
$\beta$ = $[3(1 - \nu^2)/R^2t^2]^{1/4}$, in.$^{-1}$
$\theta$ = rotation of cylinder wall, rad
= $dw/dx$
$\nu$ = Poisson's ratio
$\sigma_l$ = longitudinal (meridional) stress component, psi
$\sigma_r$ = radial stress component, psi
$\sigma_t$ = tangential (circumferential) stress component, psi

$$F_{11}(\beta x) = (\cosh \beta x \sin \beta x - \sinh \beta x \cos \beta x)/2$$

$$F_{12}(\beta x) = \sinh \beta x \sin \beta x$$

$$F_{13}(\beta x) = (\cosh \beta x \sin \beta x + \sinh \beta x \cos \beta x)/2$$

$$F_{14}(\beta x) = \cosh \beta x \cos \beta x$$

$$f_1(\beta x) = e^{-\beta x} \cos \beta x$$

$$f_2(\beta x) = e^{-\beta x} (\cos \beta x - \sin \beta x)$$

$$f_3(\beta x) = e^{-\beta x} (\cos \beta x + \sin \beta x)$$

$$f_4(\beta x) = e^{-\beta x} \sin \beta x$$

$$B_{11} = B_{11}(\beta L) = \frac{\sinh 2\beta L - \sin 2\beta L}{2(\sinh^2 \beta L - \sin^2 \beta L)}$$

$$B_{12} = B_{12}(\beta L) = \frac{\cosh 2\beta L - \cos 2\beta L}{2(\sinh^2 \beta L - \sin^2 \beta L)}$$

$$B_{22} = B_{22}(\beta L) = \frac{\sinh 2\beta L + \sin 2\beta L}{\sinh^2 \beta L - \sin^2 \beta L}$$

$$G_{11} = G_{11}(\beta L) = -\frac{\cosh \beta L \sin \beta L - \sinh \beta L \cos \beta L}{\sinh^2 \beta L - \sin^2 \beta L}$$

$$G_{12} = G_{12}(\beta L) = -\frac{2 \sinh \beta L \sin \beta L}{\sinh^2 \beta L - \sin^2 \beta L}$$

$$G_{22} = G_{22}(\beta L) = -\frac{2(\cosh \beta L \sin \beta L + \sinh \beta L \cos \beta L)}{\sinh^2 \beta L - \sin^2 \beta L}$$

The sign convention arbitrarily chosen for the analysis of cylindrical shells in this Article is as indicated in Fig. NM13A-1. Positive directions assumed for pertinent quantities are indicated.



Copyright ASME International
Provided by IHS under license with ASME
No reproduction or networking permitted without license from IHS

Not for Resale

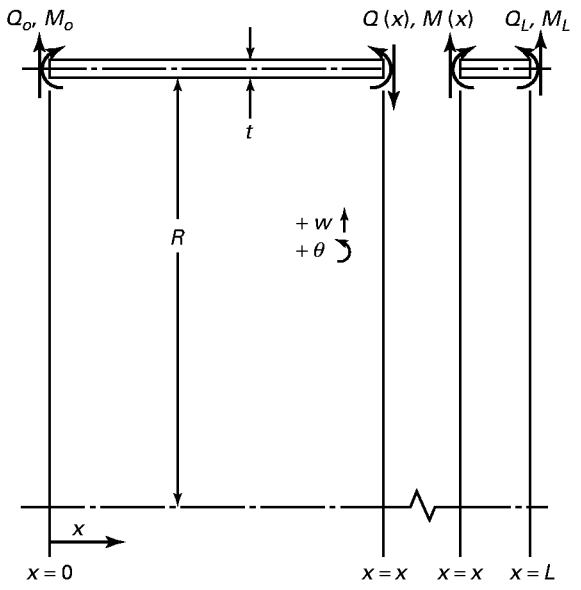


(00) **FIG. NM13A-1 SIGN CONVENTIONS FOR CYLINDRICAL SEGMENTS**

## NM13A-200 PRINCIPAL STRESSES AND STRESS INTENSITIES DUE TO INTERNAL PRESSURE

The formulas for principal stresses and stress intensities presented in this paragraph include the loading effects of internal pressure only and exclude the effects of all structural discontinuities.

### NM13A-210 Principal Stresses

The principal stresses developed at any point in the wall of a cylindrical shell due to internal pressure are given by the formulas:

$$\sigma_1 = \sigma_t = pR/t \quad (1)$$

$$\sigma_2 = \sigma_l = pR/2t \quad (2)$$

$$\sigma_3 = \sigma_r = 0 \quad (3)$$

### NM13A-220 Stress Intensities

The general primary membrane stress intensity developed across the thickness of a cylindrical shell due to internal pressure is given by the formula:

$$S = \frac{pR}{t}$$

## NM13A-300 BENDING ANALYSIS FOR UNIFORMLY DISTRIBUTED EDGE LOADS

The formulas in this paragraph describe the behavior of a cylindrical shell when subjected to the action of bending moments $M$, in.-lb/in. of circumference, and radial shearing forces $Q$, lb/in. of circumference, uniformly distributed at the edges and acting at the mean radius of the shell. The behavior of the shell due to all other loadings must be evaluated independently and combined by superposition.

### NM13A-310 Displacements, Bending Moments, and Shearing Forces in Terms of Conditions at Reference Edge, $x = 0$

*(a)* The radial displacement $w(x)$, angular displacement or rotation $\theta(x)$, bending moments $M(x)$, and radial shearing forces $Q(x)$ at any axial location of the cylinder are given by the following equations in terms of $w_o$, $\theta_o$, $M_o$, and $Q_o$:

$$w(x) = (Q_o/2\beta^3D)F_{11}(\beta x) + (M_o/2\beta^2D)F_{12}(\beta x) + (\theta_o/\beta)F_{13}(\beta x) + w_oF_{14}(\beta x) \quad (1)$$

$$\theta(x)/\beta = (Q_o/2\beta^3D)F_{12}(\beta x) + 2(M_o/2\beta^2D)F_{13}(\beta x) + (\theta_o/\beta)F_{14}(\beta x) - 2w_oF_{11}(\beta x) \quad (2)$$

$$M(x)/2\beta^2D = (Q_o/2\beta^3D)F_{13}(\beta x) + (M_o/2\beta^2D)F_{14}(\beta x) - (\theta_o/\beta)F_{11}(\beta x) - w_oF_{12}(\beta x) \quad (3)$$

$$Q(x)/2\beta^3D = (Q_o/2\beta^3D)F_{14}(\beta x) - 2(M_o/2\beta^2D)F_{11}(\beta x) - (\theta_o/\beta)F_{12}(\beta x) - 2w_oF_{13}(\beta x) \quad (4)$$

*(b)* In the case of cylinders of sufficient length, the equations in (a) above reduce to those given below. These equations may be used for cylinders characterized by lengths not less than $3/\beta$. The combined effects of loadings at the two edges may be evaluated by applying the equations to the loadings at each edge, separately, and superposing the results:

$$w(x) = (Q_o/2\beta^3D)f_1(\beta x) + (M_o/2\beta^2D)f_2(\beta x) \quad (1)$$

$$\theta(x)/\beta = -(Q_o/2\beta^3D)f_3(\beta x) - 2(M_o/2\beta^2D)f_1(\beta x) \quad (2)$$



Copyright ASME International
Provided by IHS under license with ASME
No reproduction or networking permitted without license from IHS
Not for Resale

$$M(x)/2\beta^2D = (Q_o/2\beta^3D)f_4(\beta x) + (M_o/2\beta^2D)f_3(\beta x) \quad (3)$$

$$Q(x)/2\beta^3D = (Q_o/2\beta^3D)f_2(\beta x) - 2(M_o/2\beta^2D)f_4(\beta x) \quad (4)$$

## NM13A-320 Edge Displacements and Rotations in Terms of Edge Loads

*(a)* The radial displacements $w_o$ and $w_L$ and rotations $\theta_o$ and $-\theta_L$ developed at the edges of a cylindrical shell sustaining the action of edge loads $Q_o$, $M_o$, $Q_L$, and $M_L$ are given by the following formulas:

$$w_o = (B_{11}/2\beta^3D)Q_o + (B_{12}/2\beta^2D)M_o + (G_{11}/2\beta^3D)Q_L + (G_{12}/2\beta^2D)M_L \quad (1)$$

$$-\theta_o = (B_{12}/2\beta^2D)Q_o + (B_{22}/2\beta D)M_o + (G_{12}/2\beta^2D)Q_L + (G_{22}/2\beta D)M_L \quad (2)$$

$$w_L = (G_{11}/2\beta^3D)Q_o + (G_{12}/2\beta^2D)M_o + (B_{11}/2\beta^3D)Q_L + (B_{12}/2\beta^2D)M_L \quad (3)$$

$$\theta_L = (G_{12}/2\beta^2D)Q_o + (G_{22}/2\beta D)M_o + (B_{12}/2\beta^2D)Q_L + (B_{22}/2\beta D)M_L \quad (4)$$

*(b)* The influence functions, $B$'s and $G$'s, appearing in the formulas in subpara. (a) above, rapidly approach limiting values as the length $L$ of the cylinder increases. The limiting values are:

$$B_{11} = B_{12} = 1$$

$$B_{22} = 2$$

$$G_{11} = G_{12} = G_{22} = 0$$

*(1)* Thus, for cylindrical shells of sufficient length, the loading conditions prescribed at one edge do not influence the displacements at the other edge.

*(2)* In the case of cylindrical shells characterized by lengths not less than $3/\beta$, the influence functions, $B$'s and $G$'s, are sufficiently close to the limiting values that the limiting values may be used in the formulas in subpara. (a) above without significant error.

*(c)* In the case of sufficiently short cylinders, the influence functions, $B$'s and $G$'s, appearing in the formulas in subpara. (a) above, are, to a first approximation, given by the following expressions:

$$B_{11} = 2/\beta L$$

$$B_{12} = 3/(\beta L)^2$$

$$B_{22} = 6/(\beta L)^3$$

$$G_{11} = -1/\beta L$$

$$G_{12} = -3/(\beta L)^2$$

$$G_{22} = -6/(\beta L)^3$$

Introducing these expressions for the influence functions, $B$'s and $G$'s, into the formulas in subpara. (a) above yields expressions identical to those obtained by the application of ring theory. Accordingly, the resultant expressions are subject to all of the limitations inherent in the ring theory, including the limitations due to the assumption that the entire cross-sectional area of the ring, $t \times L$, rotates about its centroid without distortion. Nevertheless, in the analysis of very short cylindrical shells characterized by lengths not greater than $0.5/\beta$, the expressions may be used without introducing significant error.

## NM13A-330 Principal Stresses Due to Bending

The principal stresses developed at the surfaces of a cylindrical shell at any axial location $x$ due to uniformly distributed edge loads (see Fig. NM13A-1) are given by the formulas:

$$\sigma_1 = \sigma_t(x) = \frac{Ew(x)}{R + t/2} \pm \frac{6\nu M(x)}{t^2} \quad (1)$$

$$\sigma_2 = \sigma_l(x) = \pm 6M(x)/t^2 \quad (2)$$

$$\sigma_3 = \sigma_r = 0 \quad (3)$$

In these formulas, where terms are preceded by a double sign ±, the upper sign refers to the inside surface of the cylinder and the lower sign refers to the outside surface.



Copyright ASME International
Provided by IHS under license with ASME
No reproduction or networking permitted without license from IHS
Not for Resale

# ARTICLE B
# ANALYSIS OF SPHERICAL SHELLS

## NM13B-100 SCOPE

*(a)* In this Article, formulas are given for stresses and deformations in spherical shells subjected to internal or external pressure.

*(b)* Formulas are also given for bending analysis of partial spherical shells under the action of uniformly distributed edge forces and moments.

## NM13B-200 NOMENCLATURE AND SIGN CONVENTION

The symbols and sign convention adopted in this Article are defined as follows:

$D$ = flexural rigidity, in.-lb
= $Et^3/12(1 - \nu^2)$
$E$ = modulus of elasticity, psi
$H$ = force per unit length of circumference, perpendicular to centerline of sphere, lb/in.
$l$ = subscript to denote meridional direction
$M$ = meridional bending moment per unit length of circumference, in.-lb/in.
$N$ = membrane force, lb/in.
$o$ = subscript to denote a quantity at reference edge of sphere
$p$ = uniform pressure, internal or external, psi
$Q$ = radial shearing force per unit of circumference, lb/in.
$R$ = inside radius, in.
$S$ = stress intensity, psi
$t$ = thickness of spherical shell, in.
= subscript used to denote circumferential direction
$w$ = radial displacement of midsurface, in.
$x$ = length of arc for angle $\alpha$, measured from reference edge of hemisphere
= $R\alpha$, in.
$\alpha$ = meridional angle measured from the reference edge, rad
$\beta$ = $[3(1 - \nu^2)/R^2t^2]^{1/4}$, 1/in.
$\gamma_o$ = $\tan^{-1}(-k_1)$, rad
$\delta$ = lateral displacement of midsurface, perpendicular to centerline of spherical shell, in.
$\theta$ = rotation of midsurface, rad
$\lambda$ = $\beta R$
$\nu$ = Poisson's ratio
$\sigma_l$ = longitudinal (meridional) stress component, psi
$\sigma_r$ = radial stress component, psi
$\sigma_t$ = tangential (circumferential) stress component, psi
$\phi$ = meridional angle measured from centerline of sphere, rad
$\phi_L$ = meridional angle of second edge, rad
$\phi_o$ = meridional angle of reference edge where loading is applied, rad

$$K_1 = 1 - \frac{1 - 2\nu}{2\lambda}\cot(\phi_o - \alpha)$$

$$K_2 = 1 - \frac{1 + 2\nu}{2\lambda}\cot(\phi_o - \alpha)$$

$$k_1 = 1 - \frac{1 - 2\nu}{2\lambda}\cot\phi_o$$

$$k_2 = 1 - \frac{1 + 2\nu}{2\lambda}\cot\phi_o$$

$$A_o = \sqrt{1 + k_1^2}$$

$$B(\text{at }\alpha) = (1 + \nu^2)(K_1 + K_2) - 2K_2$$

$$C(\text{at }\alpha) = \sqrt{\sin\phi_o/\sin(\phi_o - \alpha)}$$

$$F(\text{at }\alpha) = \sqrt{\sin(\phi_o)\sin(\phi_o - \alpha)}$$

The sign convention is listed below and shown in Fig. NM13B-1 by the positive directions of the pertinent quantities.

$(H)$, $(H_o)$ = force perpendicular to centerline, positive outward
$(M)$, $(M_o)$ = moment, positive when causing tension on the inside surface
$(N_t)$, $(N_l)$ = membrane force, positive when causing tension
$(p)$ = pressure, positive radially outward
$(\delta)$ = lateral displacement, perpendicular to centerline of sphere, positive outward
$(\theta)$ = rotation, positive when accompanied by an increase in the radius or curvature, as caused by a positive moment



Copyright ASME International
Provided by IHS under license with ASME
No reproduction or networking permitted without license from IHS
Not for Resale

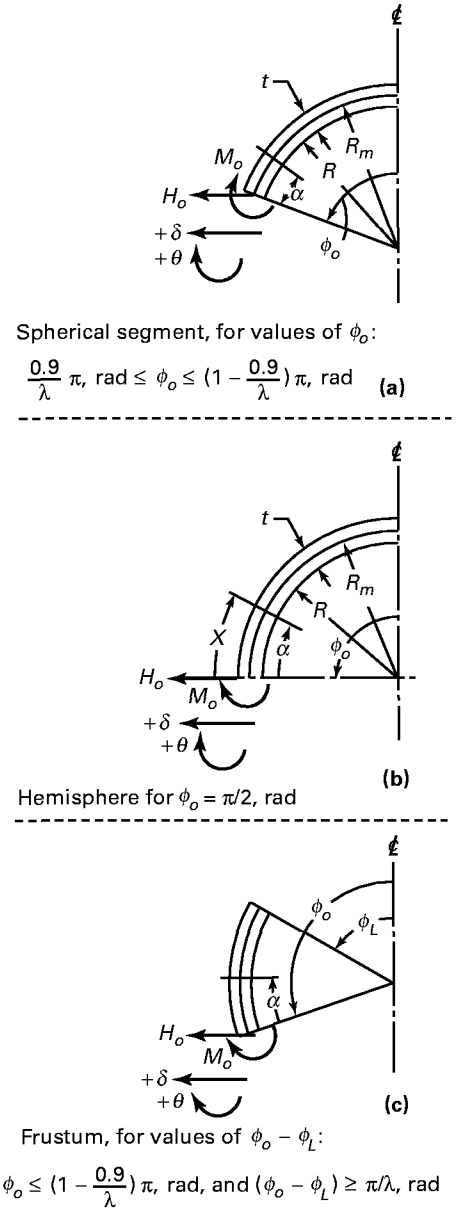


**(00) FIG. NM13B-1 SIGN CONVENTIONS FOR SPHERICAL SEGMENTS**

## NM13B-300 PRINCIPAL STRESSES AND STRESS INTENSITIES RESULTING FROM INTERNAL OR EXTERNAL PRESSURE

In this section, formulas are given for principal stresses and stress intensities resulting from uniformly distributed internal or external pressure in complete or partial spherical shells. The effects of discontinuities in geometry and loading are not included and should be evaluated independently. The stresses resulting from all effects must be combined by superposition.

### NM13B-310 Principal Stresses Resulting From Internal Pressure

The principal stresses at any point in the wall of a spherical shell are given by the following formulas:

$$\sigma_1 = \sigma_l = pR/2t \quad (1)$$

$$\sigma_2 = \sigma_t = pR/2t \quad (2)$$

$$\sigma_3 = \sigma_r = 0 \quad (3)$$

### NM13B-320 Stress Intensities Resulting From Internal Pressure

The average primary stress intensity in a spherical shell resulting from internal pressure is given by the formula:

$$S_{avg} = pR/2t$$

### NM13B-330 Principal Stresses Resulting From External Pressure

The principal stresses at any point in the wall of a spherical shell resulting from external pressure are given by the following formulas:

$$\sigma_1 = \sigma_l = pR/2t \quad (1)$$

$$\sigma_2 = \sigma_t = pR/2t \quad (2)$$

$$\sigma_3 = \sigma_r = 0 \quad (3)$$

### NM13B-340 Stress Intensities Resulting From External Pressure

The average primary stress intensity in a spherical shell resulting from external pressure is given by the formula:

$$S_{avg} = pR/2t$$

NOTE: The formulas in paras. NM13B-330 and NM13B-340 may be used only if the applied external pressure is less than the critical pressure that would cause instability of the spherical shell. The value of the critical pressure must be evaluated in accordance with the rules given in para. 3A-320.



Copyright ASME International
Provided by IHS under license with ASME
No reproduction or networking permitted without license from IHS
Not for Resale

## NM13B-400 BENDING ANALYSIS FOR UNIFORMLY DISTRIBUTED EDGE LOADS

*(a)* The formulas in this section describe the behavior of partial spherical shells of the types shown in Fig. NM13B-1, when subjected to the action of meridional bending moment $M_o$ (in.-lb/in. of circumference) and forces $H_o$ (in.-lb/in. of circumference), uniformly distributed at the reference edge and acting at the mean radius of the shell. The effects of all other loading must be evaluated independently and combined by superposition.

*(b)* The formulas listed in this section become less accurate and should be used with caution when $R/t$ is less than 10 and/or the opening angle limitations shown in Fig. NM13B-1 are exceeded.

## NM13B-410 Displacement, Rotation, Moment, and Membrane Force in Terms of Loading Conditions at Reference Edge

The displacement $\delta$, the rotation $\theta$, the bending moments $M_l$ and $M_t$, and the membrane forces $N_l$ and $N_t$ at any location of sphere are given in terms of the edge loads $M_o$ and $H_o$ by the following formulas:

$$\delta = M_o\left\{\frac{2\lambda^2}{Etk_1}F(\text{at }\alpha)e^{-\lambda\alpha}\left[\cos(\lambda\alpha) - K_2\sin(\lambda\alpha)\right]\right\} + H_o\left\{\frac{R\lambda}{Etk_1}A_o\sin\phi_o\,F(\text{at }\alpha)e^{-\lambda\alpha} \times \left[\cos(\lambda\alpha+\gamma_o) - K_2\sin(\lambda\alpha+\gamma_o)\right]\right\} \quad (1)$$

$$\theta = M_o\left[\frac{4\lambda^3}{REtk_1}C(\text{at }\alpha)e^{-\lambda\alpha}\cos(\lambda\alpha)\right] + H_o\left[\frac{2\lambda^2}{Etk_1}A_o\sin\phi_o\,C(\text{at }\alpha)e^{-\lambda\alpha} \times \cos(\lambda\alpha+\gamma_o)\right] \quad (2)$$

$$M_l = M_o\left\{\frac{1}{k_1}C(\text{at }\alpha)e^{-\lambda\alpha}\left[K_1\cos(\lambda\alpha) + \sin(\lambda\alpha)\right]\right\} + H_o\left\{\frac{R}{2\lambda k_1}A_o\sin\phi_o\,C(\text{at }\alpha)e^{-\lambda\alpha} \times \left[K_1\cos(\lambda\alpha+\gamma_o) + \sin(\lambda\alpha+\gamma_o)\right]\right\} \quad (3)$$

$$M_t = M_o\left\{\frac{C(\alpha)}{2\nu k_1}e^{-\lambda\alpha}\left[B(\text{at }\alpha)\cos(\lambda\alpha) + 2\nu^2\sin(\lambda\alpha)\right]\right\} + H_o\left\{\frac{R}{4\nu\lambda k_1}A_o\sin\phi_o\,C(\text{at }\alpha)e^{-\lambda\alpha} \times \left[B(\alpha)\cos(\lambda\alpha+\gamma_o) + 2\nu^2\sin(\lambda\alpha+\gamma_o)\right]\right\} \quad (4)$$

$$N_l = -M_o\left[\frac{2\lambda}{Rk_1}C(\text{at }\alpha)e^{-\lambda\alpha}\sin(\lambda\alpha)\cot(\phi_o-\alpha)\right] - H_o\left[\frac{1}{k_1}A_o\cot(\phi_o-\alpha)\sin\phi_o\,C(\text{at }\alpha)e^{-\lambda\alpha} \times \sin(\lambda\alpha+\gamma_o)\right] \quad (5)$$

$$N_t = M_o\left\{\frac{2\lambda^2}{Rk_1}C(\text{at }\alpha)e^{-\lambda\alpha} \times \left[\cos(\lambda\alpha) - \left(\frac{K_1+K_2}{2}\right)\sin(\lambda\alpha)\right]\right\} + H_o\left\{\frac{\lambda}{k_1}A_o\sin\phi_o\,C(\text{at }\alpha)e^{-\lambda\alpha} \times \left[\cos(\lambda\alpha+\gamma_o) - \left(\frac{K_1+K_2}{2}\right)\sin(\lambda\alpha+\gamma_o)\right]\right\} \quad (6)$$

## NM13B-420 Displacement and Rotation of Reference Edge in Terms of Loading Conditions at Reference Edge

*(a)* At the reference edge, $\alpha = 0$ and $\phi = \phi_o$. The formulas for the displacement and rotation (para. NM13B-410) simplify to those given below:

$$\delta_o = M_o\frac{2\lambda^2\sin\phi_o}{Etk_1} + H_o\frac{R\lambda\sin^2\phi_o}{Et}\left(\frac{1}{k_1}+k_2\right) \quad (1)$$

$$\theta_o = M_o\frac{4\lambda^3}{REtk_1} + H_o\frac{2\lambda^2\sin\phi_o}{Etk_1} \quad (2)$$

*(b)* In the case where the shell under consideration is a full hemisphere, the formulas given in (1) and (2) above reduce to those given below:

$$\delta_o = M_o\frac{2\lambda^2}{Et} + H_o\frac{2R\lambda}{Et} \quad (1)$$

$$\theta_o = M_o\frac{4\lambda^3}{REt} + H_o\frac{2\lambda^2}{Et} \quad (2)$$

## NM13B-430 Principal Stresses in Spherical Shells Resulting From Edge Loads

The principal stresses at the inside and outside surfaces of a spherical shell at any location, resulting from edge loads $M_o$ and $H_o$, are given by the following formulas:



Copyright ASME International
Provided by IHS under license with ASME
No reproduction or networking permitted without license from IHS Not for Resale

$$\sigma_1 = \sigma_l(\text{at } \alpha) = \frac{N_l}{t} \pm \frac{6M_l}{t^2} \quad (1)$$

$$\sigma_2 = \sigma_t(\text{at } \alpha) = \frac{N_t}{t} \pm \frac{6M_t}{t^2} \quad (2)$$

$$\sigma_3 = \sigma_r(\text{at } \alpha) = 0 \quad (3)$$

In these formulas, where terms are preceded by a double sign ±, the upper sign refers to the inside surface of the shell and the lower sign refers to the outside surface.

## NM13B-500 ALTERNATE BENDING ANALYSIS OF A HEMISPHERICAL SHELL SUBJECTED TO UNIFORMLY DISTRIBUTED EDGE LOADS

If a less exacting but more expedient analysis of hemispherical shells is required, formulas derived for cylindrical shells may be used in a modified form. The formulas listed in this paragraph describe the behavior of a hemispherical shell as approximated by a cylindrical shell of the same radius and thickness when subjected to the action of uniformly distributed edge loads $M_o$ and $H_o$ at $\alpha = 0$, $x = 0$, and $\phi_o = 90$ deg $= \pi/2$ rad.

### NM13B-510 Displacement, Rotation, Moment, and Shear Forces in Terms of Loading Conditions at Edge

$$\delta_o = H_o/2\beta^3 D + M_o/2\beta^2 D \quad (1)$$

$$\theta_o = H_o/2\beta^2 D + M_o/\beta \mathrm{D} \quad (2)$$

$$\delta(x) = \frac{H_o \sin^2 \phi}{2\beta^3 D} f_1(\beta x) + \frac{M_o \sin \phi}{2\beta^2 D} f_2(\beta x) \quad (3)$$

$$\theta(x) = \frac{H_o \sin \phi}{2\beta^2 D} f_3(\beta x) + \frac{M_o}{\beta D} f_1(\beta x) \quad (4)$$

$$M(x) = \frac{H_o \sin \phi}{\beta} f_4(\beta x) + M_o f_3(\beta x) \quad (5)$$

$$Q(x) = H_o \sin \phi f_2(\beta x) - 2\beta M_o f_4(\beta x) \quad (6)$$

where $f_1$, $f_2$, $f_3$, and $f_4$ are defined in Article A, Analysis of Cylindrical Shells, and

$$x = \alpha R = (\pi/2 - \phi)R$$

### NM13B-520 Principal Stresses in a Hemispherical Shell Due to Edge Loads

The principal stresses in a hemispherical shell, due to edge loads $M_o$ and $H_o$ at the inside and outside surfaces of a hemispherical shell at any meridional location, are given by the formulas:

$$\sigma_1 = \sigma_l(\text{at } x) = \pm 6M(\text{at } x)/t^2 \quad (1)$$

$$\sigma_2 = \sigma_t(\text{at } x) = E\delta(x)/R \pm \nu 6M(\text{at } x)/t^2 \quad (2)$$

$$\sigma_3 = \sigma_r(\text{at } x) = 0 \quad (3)$$

In these formulas, where terms are preceded by a double sign ±, the upper sign refers to the inside surface of the hemisphere and the lower sign refers to the outside surface.

# ARTICLE C
# ANALYSIS OF FLAT CIRCULAR HEADS

## NM13C-100 SCOPE

*(a)* In this Article, formulas are given for stresses and displacements in flat circular plates used as heads for pressure vessels.

*(b)* Formulas are also given for stresses and displacements in these heads due to forces and edge moments uniformly distributed along the outer edge and uniformly distributed over a circle on one face. The radius of this circle is intended to match the mean radius of an adjoining element such as a cylinder, cone, or spherical segment.

## NM13C-200 NOMENCLATURE AND SIGN CONVENTION

The symbols and sign conventions adopted in this Article are defined as follows:

$E$ = elastic modulus, psi
$F$ = geometry constant, given in Table NM13C-1
$M$ = radial bending moment, in.-lb/in. of circumference
$p$ = pressure, psi
$Q$ = radial force, lb/in. of circumference
$R$ = outside radius of plate, in.
$r$ = radial distance from center of plate, in.
$t$ = thickness of plate



Copyright ASME International
Provided by IHS under license with ASME
No reproduction or networking permitted without license from IHS
Not for Resale

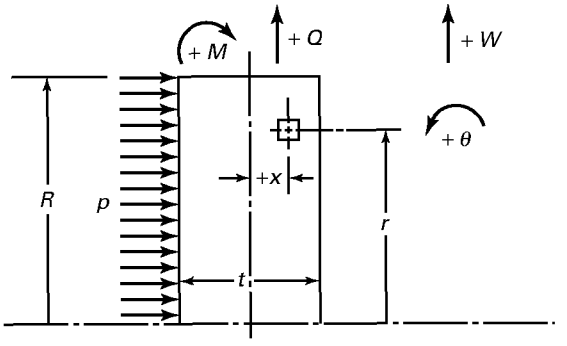


(00) **FIG. NM13C-1 SIGN CONVENTIONS FOR FLAT PLATES**

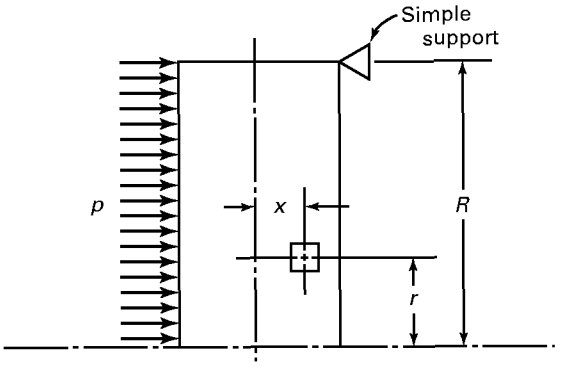


**FIG. NM13C-2 SIMPLY SUPPORTED FLAT PLATE** (00)

$t_s$ = thickness of connecting shell at the head junction, in.
$w$ = radial displacement, in.
$x$ = longitudinal distance from midplane of plate, in.
$\theta$ = rotation, rad
$\nu$ = Poisson's ratio
$\sigma_l$ = longitudinal stress, psi
$\sigma_r$ = radial stress, psi
$\sigma_t$ = tangential (circumferential) stress, psi

Tensile stresses are positive. The positive directions of the coordinates, radial forces, moments, and displacements are shown in Fig. NM13C-1. The pressure is assumed to act on the surface where $x = -t/2$.

## NM13C-300 PRESSURE AND EDGE LOADS ON CIRCULAR FLAT PLATES

In the following paragraphs, formulas are given for the principal stresses and deformations of flat plates under axisymmetric loading conditions.

### NM13C-310 Pressure Loads on Simply Supported Flat Plates

The principal stresses and deformations for a flat plate, simply supported at its periphery and loaded in the manner shown in Fig. NM13C-2, are given for a radial location $r$ at any point $x$ in the cross section by the following formulas.

Radial bending stress:

$$\sigma_r = p\,\frac{3(x)}{4t^3}\,[(3 + \nu)(R^2 - r^2)] \qquad (1)$$

Tangential bending stress:

$$\sigma_t = p\,\frac{3(x)}{4t^3}\,[(3 + \nu)R^2 - (1 + 3\nu)r^2] \qquad (2)$$

Longitudinal stress:

$$\sigma_l = \frac{p}{t}\left(x - \frac{t}{2}\right) \qquad (3)$$

Rotation of the midplane:

$$\theta = -p\,\frac{3(1 - \nu)}{4t^3E}\,[r^3(1 + \nu) - rR^2(3 + \nu)] \qquad (4)$$

Rotation of the midplane at the outer edge:

$$\theta = +p\,\frac{3(1 - \nu)}{2E}\left(\frac{R}{t}\right)^3 \qquad (5)$$

Radial displacement:

$$w = +(x)\,\theta \qquad (6)$$

### NM13C-320 Edge Loads on Flat Plates

The principal stresses and deformations of a flat plate subjected to uniformly distributed edge loads, as shown in Fig. NM13C-3, are given for radial location $r$ at any point $x$ in the cross section by the following formulas.



Copyright ASME International
Provided by IHS under license with ASME
No reproduction or networking permitted without license from IHS
Not for Resale

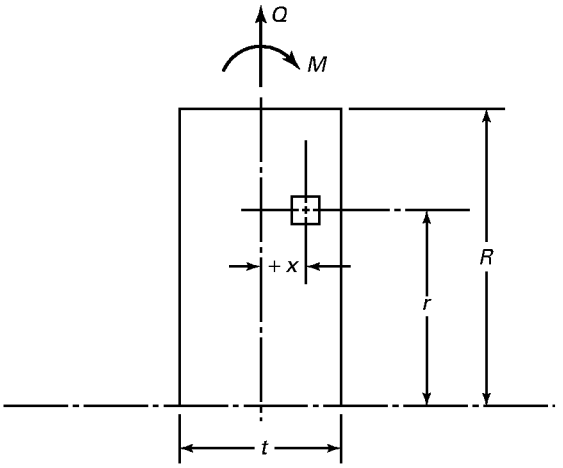


(00) **FIG. NM13C-3 EDGE LOADS ON FLAT PLATES**

Radial and tangential stresses:

$$\sigma_r = \sigma_t = \frac{Q}{t} - \frac{12(x)}{t^3} M \quad (1)$$

Rotation of the midplane:

$$\theta = \frac{-12(1 - \nu)(r)}{Et^3} M \quad (2)$$

Radial displacement:

$$w = \frac{(1 - \nu)(r)}{Et} Q + (x)\theta \quad (3)$$

## NM13C-400 FLAT PLATE PRESSURE VESSEL HEADS

Flat plates used as pressure vessel heads are attached to a vessel shell in the manner shown by the typical examples in Fig. NM13C-4.

Since the support conditions at the edge of the plate depend upon the flexibility of the adjoining shell, the stress distribution in the plate is influenced by the shell thickness and geometry. The structure formed by the head and the shell may be analyzed according to the principles of discontinuity analysis described in Article D. In the following paragraphs, formulas are given for the quantities necessary to perform a discontinuity analysis.

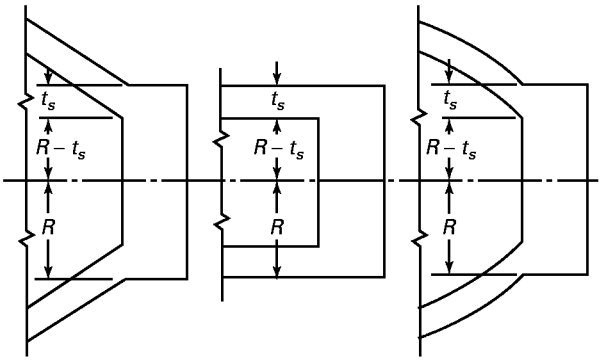


**FIG. NM13C-4 FLAT PLATE VESSEL HEAD** (00)

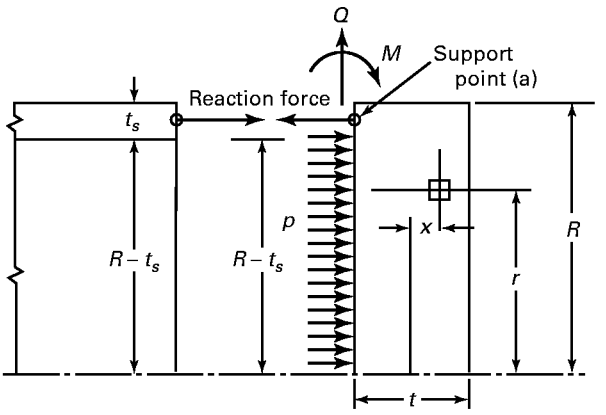


**FIG. NM13C-5 FLAT PLATE TO CYLINDER JOINT** (00)

## NM13C-410 Displacements and Principal Stresses in a Flat Head

The head is assumed to be separated from the adjoining shell element and under the action of the pressure load. Figure NM13C-5 illustrates this condition. The effects of the adjacent shell are represented by the pressure reaction force, the discontinuity force $Q$, and the discontinuity moment $M$. These act at the assumed junction point (a). The pressure acts on the left-hand face over a circular area defined by the inside radius of the adjacent shell. The support point lies on this same face at the mid-radius of the adjacent shell. The formulas in this section are given in terms of the head dimensions $R$ and $t$, and multiplying factors $F_1$ to $F_4$. These factors reflect the extent of the pressure area and the location of the junction point. The numerical values for $F_1$ to $F_4$ are given in Table NM13C-1. These are functions of the ratio of the shell thickness $t_s$ to the head radius $R$.



Copyright ASME International
Provided by IHS under license with ASME
No reproduction or networking permitted without license from IHS
Not for Resale

### NM13C-411 Displacements of a Flat Head

*(a)* For a plate simply supported at a point (a), the rotational displacement $\theta_p$ and the radial displacement $w_p$ of point (a) due to pressure $p$ acting over the area defined by the radius $(R - t_s)$ are given by the following formulas:

$$\theta_p = + \frac{F_1}{E(t/R)^3} p \quad (1)$$

$$w_p = - \frac{t}{2} \theta_p \quad (2)$$

*(b)* The rotational displacements $\theta$ and the radial displacement $w$ of point (a) due to a uniformly distributed radial force $Q$ and moment $M$ acting at point (a) are given by the following formulas:

$$\theta = \frac{-F_3}{ER(t/R)^2} Q + \frac{-2F_3}{ER^2(t/R)^3} M \quad (1)$$

$$w = \frac{2F_3}{3E(t/R)} Q + \frac{F_3}{ER(t/R)^2} M \quad (2)$$

### NM13C-412 Principal Stresses in a Flat Head.

When the values of the discontinuity force $Q$ and the moment $M$ have been determined by a discontinuity analysis, the principal stresses in a flat plate can be calculated as follows.

*(a)* For a plate simply supported at point (a), the radial stress $\sigma_r$ for a radial location $r$ less than $(R - t_s)$ at any point $x$ due to pressure $p$ acting over the area defined by the radius $(R - t_s)$ is given by the following formula:

$$\sigma_r = \frac{xp}{t(t/R)^2} \left[ F_2 - \frac{3(3 + \nu)r^2}{4R^2} \right] \quad (1)$$

*(b)* For these same conditions, the tangential stress $\sigma_t$ and the axial stress $\sigma_l$ are given by the following formulas:

$$\sigma_t = \frac{xp}{t(t/R)^2} \left[ F_2 - \frac{3(1 + 3\nu)r^2}{4R^2} \right] \quad (2)$$

$$\sigma_l = \left( x - \frac{t}{2} \right) \frac{p}{t} \quad (3)$$

**TABLE NM13C-1 MULTIPLYING FACTORS** (00)

| $t_s/R$ | $F_1$ | $F_2$ | $F_3$ | $F_4$ |
|---|---|---|---|---|
| 0.00 | 1.0500 | 2.4750 | 4.2000 | 1.0000 |
| 0.02 | 1.0113 | 2.4149 | 4.1290 | 0.9930 |
| 0.04 | 0.9730 | 2.3547 | 4.0589 | 0.9861 |
| 0.06 | 0.9350 | 2.2943 | 3.9897 | 0.9793 |
| 0.08 | 0.8975 | 2.2339 | 3.9214 | 0.9726 |
| 0.10 | 0.8604 | 2.1734 | 3.8538 | 0.9659 |
| 0.12 | 0.8238 | 2.1129 | 3.7872 | 0.9593 |
| 0.14 | 0.7878 | 2.0524 | 3.7213 | 0.9527 |
| 0.16 | 0.7523 | 1.9920 | 3.6563 | 0.9462 |
| 0.18 | 0.7174 | 1.9316 | 3.5920 | 0.9398 |
| 0.20 | 0.6831 | 1.8713 | 3.5286 | 0.9335 |

*(c)* The radial stress $\sigma_r$ and the tangential stress $\sigma_t$ for any radial location at any point $x$ in the cross section, due to uniformly distributed radial force $Q$ and a uniformly distributed moment $M$ acting at point (a), are given by the formula:

$$\sigma_r = \sigma_t = \frac{F_4}{t} \left[ 1 - \frac{6(x)}{t} \right] Q - \frac{12F_4(x)}{t^3} M \quad (4)$$

### NM13C-500 GEOMETRY CONSTANTS

The geometry constants $F_1$ through $F_4$ are functions of Poisson's ratio and $t_s/R$. These are:

$$F_1 = \frac{3(1 - \nu)(2 - f^2)(1 - f)^2[8 - f(4 - f)(1 - \nu)]}{16(2 - f)}$$

$$F_2 = \tfrac{3}{8} (1 - f)^2 \left\{ (1 - \nu)(2 - f^2) + 4(1 + \nu) \left[ 1 + 2 \left( \ln \frac{2 - f}{2 - 2f} \right) \right] \right\}$$

$$F_3 = \tfrac{3}{8} (1 - \nu)(2 - f)[8 - f(4 - f)(1 - \nu)]$$

$$F_4 = \tfrac{1}{8} [8 - f(4 - f)(1 - \nu)]$$

In these expressions:

$$f = t_s/R$$

Table NM13C-1 lists these functions for various values of $t_s/R$. These tabular values have been computed using 0.3 for Poisson's ratio.



Copyright ASME International
Provided by IHS under license with ASME
No reproduction or networking permitted without license from IHS Not for Resale

## NM13C-600 STRESS INTENSITIES IN A FLAT PLATE

The principal stresses due to pressure $p$, discontinuity force $Q$, discontinuity moment $M$, and other coincident loadings should be combined algebraically and the stress differences determined according to the procedures of Subpart 3B. The calculated stress intensity values should not exceed the allowable values given in Subpart 3B.

# ARTICLE D
# DISCONTINUITY STRESSES

## NM13D-100 GENERAL

*(a)* Pressure vessels usually contain regions where abrupt changes in geometry, material, or loading occur. These regions are known as *discontinuity areas* and the stresses associated with them are known as *discontinuity stresses.* The discontinuity stresses are required to satisfy the compatibility of deformations of these regions.

*(b)* This Article describes a general procedure for analyzing the discontinuity stresses. A numerical example is included to illustrate the procedure.

*(c)* To determine the principal stresses at a discontinuity, it is necessary to evaluate the stresses caused by:

*(1)* pressure;

*(2)* mechanical loads;

*(3)* thermal loads;

*(4)* discontinuity loads.

The stress intensities are then obtained by superposition of the stresses according to the rules given in para. 3B-400.

## NM13D-200 INFORMATION REQUIRED

In order to perform a discontinuity analysis, the following information must be known:

*(a)* the dimensions of the vessel;

*(b)* the material properties ($E$, $\gamma$) of the component parts of the vessel (symbols as in para. NM13B-200);

*(c)* mechanical loads, such as pressure, dead weight, bolt loads, and pipe loads;

*(d)* temperature distribution in the component parts.

## NM13D-300 METHOD OF ANALYSIS

*(a)* The analysis of a pressure vessel containing discontinuity areas can be performed in a standard manner similar to the analysis of any statically indeterminate structure. The analysis is initiated by separating the vessel into shell elements of simple geometry (such as rings, cylinders, etc.) of which the structural behavior is known. The pressure, mechanical, and thermal loads acting on the structure are applied to the shell elements with a system of forces required to maintain the static equilibrium of each element. These loads and forces cause individual element deformations, which in general are not equal at the adjoining edges. The deformations at an element edge are defined as:

*(1)* radial displacement;

*(2)* rotation of meridian tangent.

A redundant moment and shear force must generally exist on the edges of the elements in order to have compatibility of deformations and restore continuity in the structure.

*(b)* At each juncture discontinuity, two equations can be written that express the equality of the combined deformations due to all the applied loads and the redundant forces and moments. One equation will express the equality of rotation; the other equation, the equality of displacement of the adjacent elements. The resulting system of simultaneous equations can be solved to obtain the redundant moment and shear force at each juncture.

## NM13D-310 Procedure for Discontinuity Analysis

The following are the basic steps to follow for determining the redundant shear and moment that may exist at a pressure vessel discontinuity.

*(a)* Separate the vessel into individual shell elements at locations of discontinuity.

*(b)* Calculate the edge deformations of each element caused by a unit shear force and a unit moment at each edge. These values are known as *influence coefficients.* The deformations due to local flexibilities may be considered in the calculation of these influence coefficients.

*(c)* Calculate the edge deformations of each element caused by loads other than redundant loads.

*(d)* Calculate the edge deformations of each element caused by the temperature distributions.

*(e)* At each juncture of two elements, equate the total radial displacements and the total rotations of each element.

*(f)* Solve the final system of simultaneous equations for the redundant shears and moments.



Copyright ASME International
Provided by IHS under license with ASME
No reproduction or networking permitted without license from IHS
Not for Resale

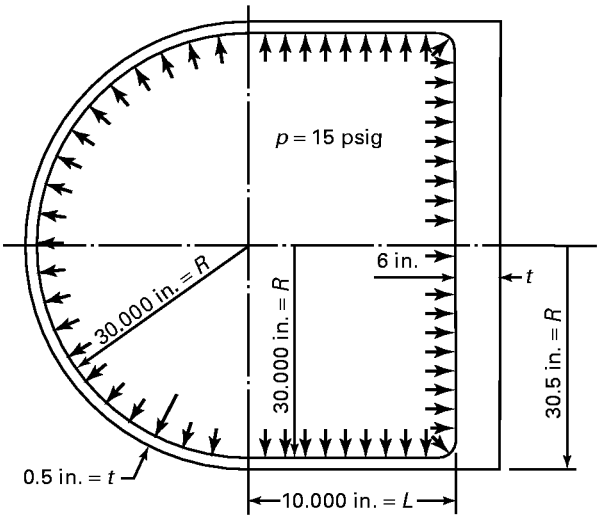


**(00) FIG. NM13D-1 EXAMPLE PRESSURE VESSEL**

### NM13D-320 Stresses

When the values of the redundant shear forces and moments have been determined, the stresses resulting from the redundant loadings may be computed by conventional methods. The final stresses for each element are determined by combining these stresses with the stresses that would exist in the individual shell elements of Step 1.

## NM13D-400 EXAMPLE ILLUSTRATING THE APPLICATION OF PARAGRAPH NM13D-310

### Given

A pressure vessel as shown in Figs. NM13D-1 and NM13D-2. It is constructed of all-mat RTP subjected to an internal pressure of 15 psig. The vessel consists of:

*(a)* a hemispherical head, inside radius $R = 30$ in., thickness $t = 0.5$ in.

*(b)* a cylindrical shell, inside radius $R = 30$ in., thickness $t = 0.5$ in., length $L = 10$ in.

*(c)* a flat head, outside radius $R = 30.5$ in., thickness $t = 6$ in.

Material properties assumed:

$E = 10^6$ psi

$\nu = 0.3$

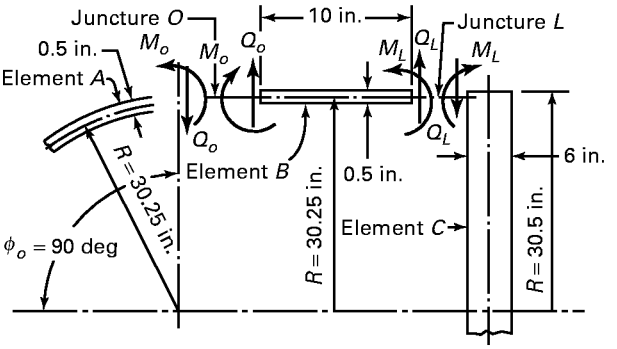


**FIG. NM13D-2 FORCES AND MOMENTS IN PRESSURE VESSEL EXAMPLE (00)**

### Required

To calculate the discontinuity stresses at the locations of structural discontinuity.

### Solution

**Step 1.** Separate the vessel at locations of discontinuity into individual elements.

**Step 2.** Calculate the influence coefficients.

*(a) Element A, Hemispherical Head.* From para. NM13B-420(b), the lateral displacement and rotation at junction $O$ due to edge loads $Q_o$ and $M_o$ are given as:

$$w_{AO} = \delta_{AO} = -\frac{2R\lambda}{Et} Q_o + \frac{2\lambda^2}{Et} M_o$$

$$\theta_{AO} = -\frac{2\lambda^2}{Et} Q_o + \frac{4\lambda^3}{REt} M_o$$

NOTE: For this case of a hemispherical shell, the lateral force $H$ and the radial force $Q$ are equal. Similarly, the lateral displacement $\delta$ and the radial displacement $w$ are equal.

Substituting the given dimensions and material properties gives:

$$w_{AO} = \delta_{AO} = (-12.097725Q_o + 3.9984962M_o) \times 10^{-4}$$

$$\theta_{AO} = (-3.9984962Q_o + 2.6431369M_o) \times 10^{-4}$$

*(b) Element B, Cylindrical Shell.* From paras. NM13A-320(a) and (b), the radial displacements and



Copyright ASME International
Provided by IHS under license with ASME
No reproduction or networking permitted without license from IHS
Not for Resale

rotations at the edges $O$ and $L$ due to edge loadings $Q_o$, $M_o$, $Q_L$, and $M_L$ are given as:[1]

$$w_{BO} = (1/2\beta^3 D)Q_o + (1/2\beta^2 D)M_o$$

$$-\theta_{BO} = (1/2\beta^2 D)Q_o + (1/\beta D)M_o$$

$$w_{BL} = (1/2\beta^3 D)Q_L + (1/2\beta^2 D)M_L$$

$$\theta_{BL} = (1/2\beta^2 D)Q_L + (1/\beta D)M_L$$

Substituting given dimensions and material properties gives:

$$w_{BO} = (12.097725Q_o + 3.9984962M_o) \times 10^{-4}$$

$$-\theta_{BO} = (3.9984962Q_o + 2.6431369M_o) \times 10^{-4}$$

$$w_{BL} = (12.097725Q_L + 3.9984962M_L) \times 10^{-4}$$

$$\theta_{BL} = (3.9984962Q_L + 2.6431369M_L) \times 10^{-4}$$

*(c) Element C, Flat Head.* From para. NM13C-411(b), the radial displacement and rotation at juncture $L$ due to edge loadings $Q_L$ and $M_L$ are given as:

$$w_{CL} = -\frac{2F_3}{3E(t/R)}Q_L + \frac{F_3}{ER(t/R)^2}M_L$$

$$\theta_{CL} = \frac{F_3}{ER(t/R)^2}Q_L - \frac{2F_3}{ER^2(t/R)^3}M_L$$

Substituting given dimensions and material properties gives:

$$w_{CL} = (-14.036001Q_L + 3.5090003M_L) \times 10^{-6}$$

$$\theta_{CL} = (3.5090003Q_L - 1.1696668M_L) \times 10^{-6}$$

**Step 3.** Calculate the edge deformations due to the internal pressure.

*(a) Element A, Hemispherical Shell (See Fig. NM13D-3).* The lateral displacement of point $O$ at the midsurface of a hemispherical shell subjected to internal pressure is given by the expression:

$$w_o = \delta_o = pR^2(1 - \nu)/2Et$$

Substituting the dimensions, pressure, and material properties gives:

$$w_{AO(pressure)} = 0.009767625 \text{ in.}$$

There is no rotation resulting from the internal pressure and membrane forces as shown:

$$\theta_{AO(pressure)} = 0$$

*(b) Element B, Cylindrical Shell (See Fig. NM13D-4).* The radial displacement of the midsurface of a closed end cylindrical shell subjected to internal pressure is given by the expression:

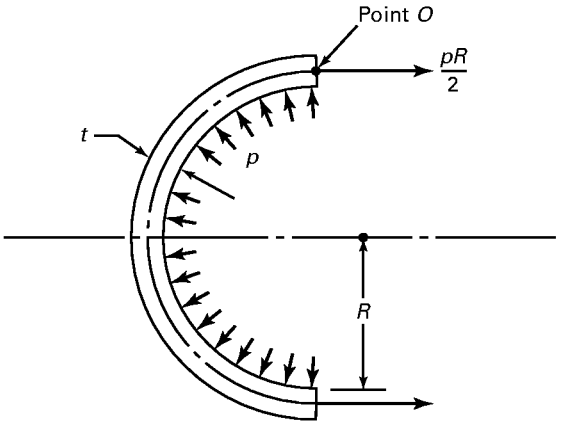


**FIG. NM13D-3 HEMISPHERICAL HEAD (00)**

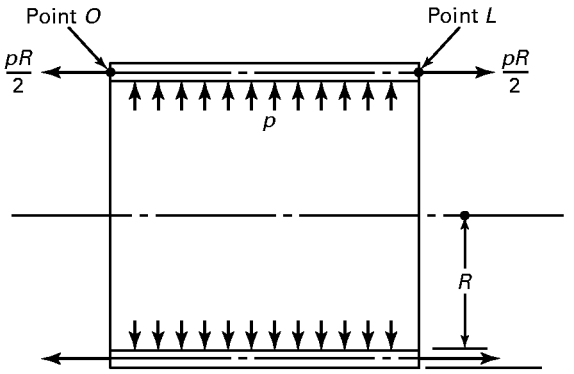


**FIG. NM13D-4 CYLINDRICAL SHELL (00)**

[1] Note that $3/\beta = 9.076$ in., which is less than the length $L = 10$ in. Then by para. NM13A-320(b), $B_{11} = B_{12} = 1$, $B_{22} = 2$, and $G_{11} = G_{12} = G_{22} = 0$.



Copyright ASME International
Provided by IHS under license with ASME
No reproduction or networking permitted without license from IHS
Not for Resale

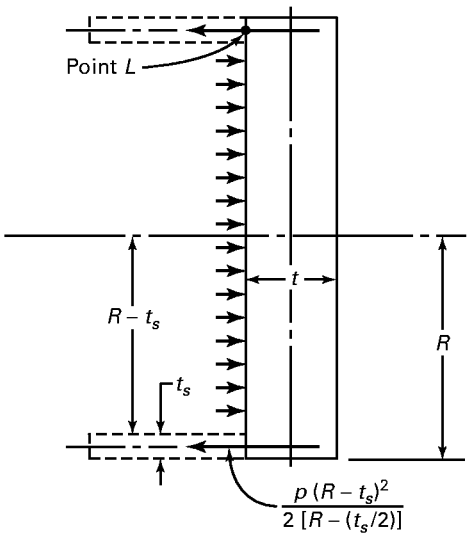


**(00) FIG. NM13D-5 FLAT PLATE HEAD**

$$w_{BO} = \left(1 - \frac{\nu}{2}\right)\frac{pR^2}{Et}$$

Substituting the dimensions, pressure, and material properties gives:

$$w_{BO(pressure)} = w_{BL(pressure)} = 0.02314125 \text{ in.}$$

There is no rotation resulting from the internal pressure and membrane forces as shown:

$$\theta_{BO(pressure)} = \theta_{BL(pressure)} = 0$$

*(c) Element C, Flat Head (See Fig. NM13D-5).* In Article C, the rotation of a flat head at point $L$ due to internal pressure is given by para. NM13C-411(a):

$$\theta = \frac{F_1}{E(t/R)^3}p$$

Substituting the dimensions, pressure, and material properties gives:

$$\theta_{CL(pressure)} = 2.006336 \times 10^{-3} \text{ rad}$$

The radial displacement at juncture $L$ is given by para. NM13C-411(a):

$$w_{CL(pressure)} = -\frac{t}{2}\theta_{CL} = -6.0190082 \times 10^{-3} \text{ in.}$$

**Step 4.** Calculate the free deformations of the edges of each element caused by temperature distributions.

In this example, all parts of the vessel are at the same temperature and are of the same material; therefore, temperature deformations need not be considered.

**Step 5.** Equate the total lateral displacements and rotations of adjacent elements at each juncture.

*(a) Juncture O:*

$$w_{AO(total)} = w_{BO(total)}$$

$$(-12.097725Q_o + 3.9984962M_o + 97.67625) \times 10^{-4} = (12.097725Q_o + 3.9984962M_o + 231.4125) \times 10^{-4} \quad (1)$$

$$\theta_{AO(total)} = \theta_{BO(total)}$$

$$(-3.9984962Q_o + 2.6431369M_o) \times 10^{-4} = (-3.9984962Q_o - 2.6431369M_o) \times 10^{-4} \quad (2)$$

*(b) Juncture L:*

$$w_{BL(total)} = w_{CL(total)}$$

$$(12.097725Q_L + 3.9984962M_L + 231.4125) \times 10^{-4} = (-0.014036001Q_L + 0.03509M_L - 60.90082) \times 10^{-4} \quad (3)$$

$$\theta_{BL(total)} = \theta_{CL(total)}$$

$$(3.9984962Q_L + 2.6431369M_L) \times 10^{-4} = (0.03509Q_L - 0.01169668M_L + 20.063361) \times 10^{-4} \quad (4)$$

Combining like terms and multiplying through by $10^4$ results in the following system of simultaneous equations which express compatibility at the junctures:

$$24.19545Q_o = -133.73625 \quad (5)$$

$$5.2862738M_o = 0 \quad (6)$$

$$12.238085Q_L + 3.9634062M_L = -292.31332 \quad (7)$$

$$3.9634062Q_L + 2.6548335M_L = 20.063361 \quad (8)$$



Copyright ASME International
Provided by IHS under license with ASME
No reproduction or networking permitted without license from IHS Not for Resale

**Step 6.** Solve the above equations for $Q_o$, $M_o$, $Q_L$, and $M_L$. The results are:

$$Q_o = -5.52733 \text{ lb/in.}$$

$$M_o = 0$$

$$Q_L = -50.98251 \text{ lb/in.}$$

$$M_L = 83.669186 \text{ in.-lb/in.}$$

NOTE: A negative sign indicates that the actual direction of the loading is opposite to that chosen in Step 1.

**Step 7.** Compute the discontinuity stresses at each juncture due to the redundants $Q_o$, $M_o$, $Q_L$, and $M_L$.

To illustrate the procedure, these stresses will be computed in the cylindrical shell (element B) at both junctures $O$ and $L$.

From para. NM13A-330:

$$\sigma_l(x) = \pm 6M(x)/t^2$$

$$\sigma_t(x) = \frac{Ew(x)}{R + t/2} \pm \frac{6\nu M(x)}{t^2}$$

$$\sigma_r = 0$$

*(a) Juncture O.* At juncture $O$, $M(x) = M_o$ and $w(x) = w_o$.

NOTE: When computing $\sigma_t(x)$, only the radial displacement due to the redundant shear forces and moments should be used. The free displacements from Steps 3 and 4 should not be included.

$$w_{BO} = (12.097725Q_o + 3.9984962M_o) \times 10^{-4} = -0.006686812 \text{ in.}$$

$$Ew_{BO} = -6{,}686.81 \text{ lb/in.}$$

$$M_o = 0$$

*(1)* Inside surface:

$$\sigma_l = 6(0)/(0.5)^2 = 0$$

$$\sigma_t = \frac{-6{,}686.81}{30.25} + 6(0.3)(0)/(0.5)^2 = -221.1 \text{ psi}$$

$$\sigma_r = 0$$

*(2)* Outside surface:

$$\sigma_l = -6(0)/(0.5)^2 = 0$$

$$\sigma_t = \frac{-6{,}686.81}{30.25} - 6(0.3)(0)/(0.5)^2 = -221.1 \text{ psi}$$

$$\sigma_r = 0$$

*(b) Juncture L.* At juncture $L$, $M(x) = M_L$ and $w(x) = w_L$.

$$w_{BL} = (12.097725Q_L + 3.9984962M_L) \times 10^{-4} = -0.028222 \text{ in.}$$

$$Ew_{BL} = -28{,}222.1 \text{ lb/in.}$$

$$M_L = 83.669186 \text{ in.-lb/in.}$$

*(1)* Inside surface:

$$\sigma_l = 6(83.669186)/(0.5)^2 = 2{,}008.1 \text{ psi}$$

$$\sigma_t = \frac{-28{,}222.1}{30.25} + 6(0.3)(83.6692)/(0.5)^2 = -330.54 \text{ psi}$$

$$\sigma_r = 0$$

*(2)* Outside surface:

$$\sigma_l = -6(83.6692)/(0.5)^2 = -2{,}008.1 \text{ psi}$$

$$\sigma_t = \frac{-28{,}222.1}{30.25} - 6(0.3)(83.6692)/(0.5)^2 = -2{,}941.02 \text{ psi}$$

$$\sigma_r = 0$$

NOTE: $E = 10^6$ psi.

*(c)* The discontinuity stresses in the hemispherical shell may be computed by using the expressions given in paras. NM13B-410 and NM13B-430.

*(d)* The discontinuity stresses in the flat head may be computed using the expressions given in para. NM13C-412.



Copyright ASME International
Provided by IHS under license with ASME
No reproduction or networking permitted without license from IHS
Not for Resale

**Step 8.** Compute the total stresses. The total stresses may be computed in any element at any juncture by combining the stresses due to the redundant shear forces and moments, as computed in Step 7, with the stresses resulting from all other loadings. In this case, the stresses in the cylindrical shell, hemispherical shell, and flat head due to internal pressure may be computed by using the expressions given in paras. NM13A-210, NM13B-310, and NM13C-412, respectively. To illustrate the procedure, the total stresses in the cylindrical shell at junctures $O$ and $L$ will be computed.

The stresses in the cylindrical shell due to internal pressure may be computed from the expressions given in para. NM13A-210:

$$\sigma_l = pR/2t$$

$$\sigma_t = pR/t$$

$$\sigma_r = 0$$

*(a) Juncture O*

*(1)* Inside surface:

$$R = 30.25 \text{ in.}$$

$$p = 15 \text{ psig}$$

$$\sigma_l = 453.8 \text{ psi}$$

$$\sigma_t = 907.5 \text{ psi}$$

$$\sigma_r = 0$$

The stresses due to the redundant shear forces and moments were computed in Step 7 as:

$$\sigma_l = 0$$

$$\sigma_t = -221.1 \text{ psi}$$

$$\sigma_r = 0$$

The total stresses are:

$$\sigma_l = 453.8 + 0 = 453.8 \text{ psi}$$

$$\sigma_t = 907.5 - 221.1 = 686.4 \text{ psi}$$

$$\sigma_r = 0$$

*(2)* Outside surface, from pressure:

$$\sigma_l = 453.8 \text{ psi}$$

$$\sigma_t = 907.5 \text{ psi}$$

$$\sigma_r = 0$$

The stresses due to the redundant shear forces and moments were computed as:

$$\sigma_l = 0$$

$$\sigma_t = -221.1 \text{ psi}$$

$$\sigma_r = 0$$

The total stresses are:

$$\sigma_l = 453.8 \text{ psi}$$

$$\sigma_t = 907.5 - 221.1 = 686.4 \text{ psi}$$

$$\sigma_r = 0$$

*(b) Juncture L*

*(1) Inside Surface.* The stresses due to the internal pressure are the same as at juncture $O$:

$$\sigma_l = 453.8 \text{ psi}$$

$$\sigma_t = 907.5 \text{ psi}$$

$$\sigma_r = 0$$

The stresses due to the redundant shear forces and moments are:

$$\sigma_l = 6(83.669)/(0.5)^2 = 2{,}008 \text{ psi}$$

$$\sigma_t = \frac{-10^6(2.8222 \times 10^{-2})}{30.25} + \frac{6(0.3)(83.669)}{(0.25)^2} = 1{,}476 \text{ psi}$$

$$\sigma_r = 0$$



Copyright ASME International
Provided by IHS under license with ASME
No reproduction or networking permitted without license from IHS
Not for Resale

The total stresses are:

$$\sigma_l = 453.8 + 2{,}008 = 2{,}462 \text{ psi}$$

$$\sigma_t = 907.5 + 1{,}476 = 2{,}383 \text{ psi}$$

$$\sigma_r = 0$$

*(2) Outside Surface.* The stresses due to the internal pressure are the same as at juncture *O*:

$$\sigma_l = 453.8 \text{ psi}$$

$$\sigma_t = 907.5 \text{ psi}$$

$$\sigma_r = 0$$

The stresses due to redundant shear forces and moments are:

$$\sigma_l = -6(83.669)/(0.5)^2 = -2{,}008 \text{ psi}$$

$$\sigma_t = \frac{-10^6(2.8222 \times 10^{-2})}{30.25} - \frac{6(0.3)(83.669)}{(0.25)^2} = -3{,}342.6 \text{ psi}$$

$$\sigma_r = 0$$

The total stresses are:

$$\sigma_l = 453.8 - 2{,}008 = -1{,}554 \text{ psi}$$

$$\sigma_t = 907.5 - 3{,}342.6 = -2{,}435.1 \text{ psi}$$

$$\sigma_r = 0$$

**Step 9.** When evaluating the stresses in accordance with para. M3-500, the strength ratios at each location should be computed from the total principal stresses determined in Step 8.



Copyright ASME International
Provided by IHS under license with ASME
No reproduction or networking permitted without license from IHS
Not for Resale

# NONMANDATORY APPENDIX NM-14
# ISO 9001 QUALITY CONTROL SYSTEM

## NM14-100 INTRODUCTION

This Appendix is intended as a supplement to Appendix M-4. It outlines the quality system (hereafter called Quality Control Program) requirements for compliance with ISO 9001 and is a guide to the features that should be covered in the written description of the Quality Control Program.

Whereas a summary of each requirement or responsibility is provided, the full text of the ISO 9001 standard is essential to proper understanding.

## NM14-200 MANAGEMENT RESPONSIBILITY

### NM14-210 Quality Policy

The Fabricator's management shall define and document the following:

*(a)* a quality policy that states management's responsibility for and commitment to quality;

*(b)* specific quality objectives;

*(c)* specific quality commitments.

Management must ensure that the quality policy, objectives, and commitments are understood, implemented, and maintained by every employee in the organization.

### NM14-220 Organization

*(a)* The responsibility, authority, and the interrelation of those in charge of the Quality Control Program shall be defined and clearly established. An organization chart showing the relationship between all departments in the organization shall be required. The lines of authority and communication shall be clearly defined. The chart shall identify the organizational groups with the particular function for which they are responsible. Personnel designated to manage or verify quality control functions shall have sufficient authority and freedom to:

*(1)* initiate action to prevent the occurrence of nonconformities;

*(2)* identify and document any quality control problems;

*(3)* initiate, recommend, or provide solutions through designated channels;

*(4)* verify the implementation of solutions;

*(5)* control further production, delivery, or installation of nonconformities until the deficiencies have been corrected.

*(b)* The Fabricator shall define the requirements for in-house verification activities and include or reference specific procedures.

*(1)* The Fabricator shall assign trained personnel to perform verification activities and ensure that adequate resources are provided to train personnel for all such activities.

*(2)* Verification activities shall include inspection, test and monitoring of the design, production, installation, and servicing of processes and/or equipment.

*(3)* The following verification activities shall be carried out by personnel who do not have direct responsibility for the work being performed:

*(a)* design review;

*(b)* audits of the Quality Control Program;

*(c)* audits of processes.

*(c)* The Fabricator shall designate a management representative who, irrespective of any other responsibilities, shall have defined overall authority and responsibility to ensure that the requirements of the Quality Control Program are fully implemented and maintained.

### NM14-230 Management Review

The Fabricator's management shall review the Quality Control Program at appropriate intervals to ensure its continuing effectiveness. Management reviews shall include assessment of the results of internal audits and verification activities.

## NM14-300 QUALITY CONTROL PROGRAM

*(a)* The Fabricator shall have and maintain a Quality Control Program that will establish that all the requirements of this Standard and ISO 9001 will be met, and will ensure that vessels conform to all specified



Copyright ASME International
Provided by IHS under license with ASME
No reproduction or networking permitted without license from IHS
Not for Resale

requirements. A written description of the Quality Control Program the Fabricator will use to meet these requirements shall be available for review. The written description may contain information of a proprietary nature relating to the Fabricator's process. Therefore, the Standard doesn't require any distribution of this information except for the Inspector, ASME Designee, or certifying body representative as covered by paras. NM14-1800 and NM14-1900. It is intended that information learned about the Quality Control Program in connection with the evaluation will be treated as confidential and that all loaned descriptions will be returned to the Fabricator upon completion of the review.

*(b)* In meeting the specified requirements, the following activities need to be addressed:

*(1)* the identification, acquisition, and implementation of any control, processes, inspection equipment, fixtures, total production resources, and skills that may be needed to achieve the required quality;

*(2)* the updating of quality control, inspection, and testing techniques, including the development of new instrumentation;

*(3)* the identification of any measurement requirement, including capability that exceeds the known state of the art, in sufficient time for the needed capability to be developed;

*(4)* the clarification of standards of acceptability for all features and requirements, including those that contain a subjective element;

*(5)* the compatibility of the design, production process, installation, inspection, and test procedures and the application documentation;

*(6)* the identification and preparation of quality records (see para. NM14-1700);

*(7)* the effective implementation of the documented Quality Control Program procedures and instructions.

## NM14-400 CONTRACT REVIEW

The Fabricator shall establish and maintain procedures for contract review and for the coordination of these activities. Each contract shall be reviewed by the Fabricator to ensure the following requirements are met:

*(a)* a documented process for examining and reviewing new contracts to verify that requirements are adequately defined;

*(b)* verifying that the Fabricator has the capability to meet all the requirements;

*(c)* defining the process for resolving any differences found during the review process.

## NM14-500 DESIGN CONTROL

The Fabricator shall establish and maintain procedures to control and verify the design of the vessel in order to ensure that the specified requirements are met.

### NM14-510 Design and Development Planning

*(a)* The Fabricator shall have plans that identify the responsibility for each design and development activity. The plans shall describe or reference these activities and shall be updated as the design changes.

*(b)* The design and verification activities shall be planned and assigned to qualified personnel equipped with adequate resources.

*(c)* Organizational and technical interfaces between different groups shall be identified and the necessary information documented, transmitted, and regularly reviewed.

### NM14-520 Design Input

Design input requirements relating to the vessel shall be identified and documented, and their selection reviewed by the User or User's Agent to ensure accuracy.

Incomplete, ambiguous, or conflicting requirements shall be resolved by the User or User's Agent.

### NM14-530 Design Output

Design output shall be documented and expressed in terms of requirements, calculations, and analysis. Design output shall:

*(a)* meet the design input requirements;

*(b)* contain or reference acceptance criteria;

*(c)* conform to appropriate regulatory requirements whether or not these have been stated in the input information;

*(d)* identify those characteristics of the design that are crucial to the safe and proper functioning of the vessel.

### NM14-540 Design Verification

*(a)* The Fabricator shall establish, document, and assign to competent personnel, functions for verifying the design.

*(b)* Design verification shall ensure that design output meets design input requirements by using control measures such as:

*(1)* holding and recording design reviews [see para. NM14-510(c)];



Copyright ASME International
Provided by IHS under license with ASME
No reproduction or networking permitted without license from IHS

Not for Resale

*(2)* undertaking qualification tests and demonstrations;

*(3)* carrying out alternative calculations;

*(4)* comparing new design with a similar proven design, if available.

### NM14-550 Design Changes

The Fabricator shall establish and maintain procedures to control the identification, documentation, review, and approval of all changes and modifications.

The Fabricator's Quality Control Program shall provide procedures that will ensure that the latest applicable drawings, design calculations, specifications, and instructions, as well as authorized changes, are used in the various aspects of the Quality Control Program for manufacture, examination, inspection, and testing.

## NM14-600 DOCUMENT CONTROL

### NM14-610 Document Approval and Issue

The Fabricator shall establish and maintain procedures to control all documents that relate to the requirements of this Standard. These documents shall be reviewed and approved for adequacy prior to issue. The controls shall ensure that:

*(a)* pertinent documents are available at all locations where operations essential to the functioning of the Quality Control Program are performed;

*(b)* obsolete documents are controlled and removed from use.

### NM14-620 Document Changes/Modifications

Changes to documents shall be reviewed and approved by the same functions/organizations that performed the original review and approval. The designated functions/organizations shall have access to all pertinent background information necessary for review and approval.

The changes to the documents shall be adequately identified in the document or appropriate attachments.

A master list of changes and current revisions of all documents identified in this system shall be maintained.

Documents shall be reissued after a practical number of changes have been made.

## NM14-700 PURCHASING

The Fabricator shall maintain a system that will ensure proper control of the purchasing of material, the control of material once it is purchased and received, and the control of purchaser-supplied product or material. This control shall include, but not be limited to, all applicable requirements of this Standard and shall ensure that only the proper material is used in manufacturing.

### NM14-710 Assessment of Subcontractors

The Fabricator shall select suppliers on their ability to meet contractual requirements and shall maintain a record of acceptable suppliers.

This acceptance shall be dependent on the product or service supplied and should take into consideration the supplier's previous performance.

The Fabricator shall ensure that the supplier's quality controls are adequate.

### NM14-720 Purchasing Data

*(a)* Purchasing documents shall contain information clearly describing the product or service ordered, including, where applicable:

*(1)* the type, class, style, grade, or other precise identification;

*(2)* the title or other positive identification and applicable issue of specifications, drawings, process requirements, inspection instructions, and other relevant technical data, including requirements for approval or qualification of product, procedures, process equipment, and personnel;

*(3)* the title, number, and issue of the quality system International Standard to be applied to the product.

*(b)* All purchasing documents shall be reviewed and approved prior to release.

### NM14-730 Verification of Purchased Product

The Fabricator shall have the right to verify that the purchased product or service conforms to all contractual or specified requirements. Verification by the Fabricator shall not absolve the supplier of providing proper product or service, nor shall it preclude subsequent rejection.

When the Fabricator elects to perform verification at the supplier's facility, such verification shall not be used by the supplier as evidence of effective quality control by the supplier.



Copyright ASME International
Provided by IHS under license with ASME
No reproduction or networking permitted without license from IHS
Not for Resale

## NM14-800 PURCHASER-SUPPLIED PRODUCT

Where incoming product or material is supplied by the User for use in the vessel, the Fabricator shall establish and maintain procedures for verification, storage, and maintenance of products provided for incorporation into the supplies. Any such product or material that is lost, damaged, or is otherwise unsuitable for use shall be recorded and reported to the User.

Verification by the Fabricator does not absolve the User of the responsibility to provide acceptable product.

## NM14-900 PRODUCT IDENTIFICATION AND TRACEABILITY

When it is required by this Standard, the Fabricator shall establish and maintain procedures for identifying the materials, components, or vessel from applicable drawings, specifications, or other documents. This control shall be maintained during all stages of production, delivery, and installation.

Where traceability is a specified requirement, individual materials and components shall have a unique identification.

## NM14-1000 PROCESS CONTROL

*(a)* The Fabricator shall identify and plan the production and, where applicable, installation processes that directly affect quality, and shall ensure these processes are completed using controlled conditions. Controlled conditions shall include the following:

*(1)* documented work instructions defining the manner of production and installation, where the absence of such instructions would adversely affect the quality, use of suitable production and installation equipment, proper working environment, and compliance with referenced standards and specifications;

*(2)* monitoring and control of suitable process and product characteristics during production and installation;

*(3)* the approval of processes and equipment used where appropriate;

*(4)* criteria for workmanship in written standards or by means of representative samples.

*(b)* The Quality Control Program shall provide for adequate monitoring of documented process conditions.

*(c) Special Processes*

*(1)* If the Fabricator makes use of special processes, the results of which cannot be fully verified by subsequent inspection and testing of the vessel and where, for example, processing deficiencies may become apparent only after the vessel is in use, continuous monitoring and/or compliance with the documented procedures is required to ensure the specified requirements are met. These processes shall be qualified and shall comply with the requirements of subparas. (a) and (b) above.

*(2)* Records shall be maintained for qualified processes, equipment, and personnel, as appropriate.

## NM14-1100 INSPECTION AND TESTING

### NM14-1110 Receiving Inspection and Testing

*(a)* The Fabricator shall ensure incoming product or material is not used or processed until it has been accepted as conforming to specified requirements, except in the case where it is released for urgent production purposes. Verification shall be in accordance with documented procedures.

*(b)* Where incoming product or material is released for urgent production purposes, it shall be positively identified and recorded in order to permit immediate recall and replacement in the event of nonconformance to specified requirements. Such recall and replacement procedures shall be defined in the Fabricator's Quality Control Program.

### NM14-1120 In-Process Inspection and Testing

The Fabricator shall:

*(a)* inspect, test, and identify materials and equipment as required by the Quality Control Program or documented procedures;

*(b)* establish equipment performance to specified requirements by use of monitoring and control methods;

*(c)* hold materials, components, or equipment until the required inspection and tests have been completed or necessary reports have been received and verified, except when released under positive recall procedures [see para. NM14-1110(b)];

*(d)* identify nonconforming material, components, or equipment.

### NM14-1130 Final Inspection and Testing

The Fabricator's Quality Control Program procedures for final inspection and testing shall require that all specified inspections and tests have been carried out and the data meets the specified requirements.



Copyright ASME International
Provided by IHS under license with ASME
No reproduction or networking permitted without license from IHS

Not for Resale

The Inspector shall carry out all final inspections and tests required by this Standard and the User's specifications, in accordance with documented procedures, to verify conformance of the finished vessel.

No vessel shall be released until all the activities specified in the Fabricator's Quality Control Program, this Standard, and User's specifications have been satisfactorily completed, and the associated data and documentation is completed.

### NM14-1140 Inspection and Test Records

Records shall be established and maintained that give evidence that the vessel has passed inspection and/or test with the defined acceptance criteria (see para. NM14-1700).

## NM14-1200 INSPECTION, MEASURING, AND TEST EQUIPMENT

*(a)* The Fabricator shall control, calibrate or have calibrated, and maintain inspection, measuring, and test equipment, whether owned, on loan, or provided by another, to demonstrate the conformance of material or equipment to the specified requirements. Equipment shall be used in a manner that ensures measurement uncertainty is known and is consistent with the required measurement capability.

*(b)* The Quality Control Program shall include procedures for the following:

*(1)* identifying the measurements to be made and the accuracy required, and selecting the appropriate inspection, measuring, and test equipment;

*(2)* identification, calibration, and adjustment of all equipment and devices that can affect vessel quality at prescribed intervals, or prior to use, against certified equipment having a known valid relationship to a national standard; if no such standard exists, the calibration basis shall be adequately documented;

*(3)* establishing, maintaining, and documenting appropriate calibration procedures, including details of equipment type, identification number, location, frequency of checks, check method, acceptance criteria, and the action to be taken when results are unsatisfactory;

*(4)* ensuring that the inspection, measuring, and test equipment is capable of the accuracy and precision necessary;

*(5)* showing the calibration status of measuring and test equipment, and maintaining calibration records for that equipment;

*(6)* verifying and documenting the validity of previous inspection and test results in the event that measuring or test equipment is found to be out of calibration;

*(7)* ensuring that environmental conditions are proper for all calibrations, inspections, measurements, and tests being performed;

*(8)* ensuring that the handling of measuring and test equipment is such that the accuracy and fitness for use is maintained;

*(9)* protecting all measuring and test equipment from conditions that would invalidate calibration settings.

*(c)* Where items such as jigs, fixtures, templates, or patterns are to be used as forms of inspection, they shall be checked to prove they are capable of verifying the acceptability of the material, component, or vessel as necessary. They shall be checked at prescribed intervals and records shall be maintained as evidence of control. When required by the Inspector, measurement design data shall be made available for verification of adequacy.

## NM14-1300 INSPECTION AND TEST STATUS

The inspection and test status of materials, components, or vessels shall be identified using suitable means (e.g., markings, tags, routing cards, inspection records, authorized stamps) that indicate their conformance or nonconformance. The identification of inspection and test status shall be maintained, as necessary, throughout production and installation of the vessel to ensure that only materials, components, or vessels that have passed the required inspections and tests are dispatched, used, or installed.

Records shall identify the inspection authority responsible for the release of conforming product.

## NM14-1400 CONTROL OF NONCONFORMING PRODUCT

The Fabricator's Quality Control Program shall establish and maintain procedures to ensure that nonconforming materials, components, or equipment are prevented from unapproved or inadvertent use or installation. The procedures shall provide for identification, documentation, evaluation, segregation, and disposition of all nonconformities and for notification to the organizational functions concerned.

*(a)* The responsibility for review and authority for disposition of nonconforming materials, components, or equipment shall be defined.



Copyright ASME International
Provided by IHS under license with ASME
No reproduction or networking permitted without license from IHS
Not for Resale

*(b)* Nonconformities shall be reviewed in accordance with documented procedures. They may be:

*(1)* reworked in accordance with Appendix M-7 to meet specified requirements;

*(2)* accepted by concession of the Inspector and User or User's Agent;

*(3)* regraded for alternative applications;

*(4)* rejected or scrapped as appropriate.

*(c)* When a nonconformity has been accepted by concession of the Inspector and User or User's Agent, it shall be documented as such. A description of the nonconformity and any repairs shall be recorded to denote the actual condition.

*(d)* Repaired or reworked nonconformities shall be reinspected by the Inspector to ensure compliance with this Standard and the User's specifications.

## NM14-1500 CORRECTIVE ACTION

The Fabricator's Quality Control Program shall establish, maintain, and document procedures for investigating the cause of nonconformities and the corrective action required to prevent recurrence. The procedures shall include:

*(a)* analysis of all processes, work operations, concessions, quality records, service reports, and customer complaints to detect and eliminate potential causes of nonconformities;

*(b)* initiation of preventive action to deal with problems at a level corresponding to the risks encountered;

*(c)* application of controls to ensure that corrective actions are implemented and that they are effective;

*(d)* implementation and documentation of changes in procedures resulting from corrective action.

## NM14-1600 HANDLING, STORAGE, PACKAGING, AND DELIVERY

The Fabricator shall establish, maintain, and document procedures for handling, storage, packaging, and delivery of materials and equipment.

### NM14-1610 Handling

The Fabricator shall provide methods and means of handling that prevent damage or deterioration.

### NM14-1620 Storage

The Fabricator shall provide secure storage areas or stock rooms to prevent damage or deterioration of materials or equipment, pending use or delivery. Appropriate methods for authorizing receipt and the dispatch to and from such areas shall be defined. The condition of the material or equipment shall be assessed as necessary in order to detect deterioration.

### NM14-1630 Packaging

The Fabricator's procedures shall control packing, preservation, and marking processes (including materials used) to the extent necessary to ensure conformance with this Standard and specified requirements. The procedures shall identify, preserve, and segregate all material or equipment from the time of receipt until the Fabricator's responsibility ceases.

### NM14-1640 Delivery

The Fabricator shall arrange for the protection of the quality of the vessel after acceptance by the Inspector. Where contractually specified, this protection shall be extended to include delivery to the User.

## NM14-1700 QUALITY RECORDS

The Fabricator's Quality Control Program shall include procedures for identification, collection, indexing, filing, storage, maintenance, and disposition of quality records. Pertinent subcontractor quality records shall be included in these procedures.

Quality records shall be maintained to demonstrate achievement of the required quality and effective operation of the Quality Control Program.

All quality records shall be legible and identifiable to the process, material, or equipment. They shall be stored and maintained so they are accessible, in an environment that will minimize deterioration or damage and prevent loss. Retention times shall be established and recorded, and where contractually agreed, they shall be available for evaluation by the User.

## NM14-1800 INTERNAL QUALITY AUDITS

The Fabricator shall have a comprehensive system of planned and documented internal quality audits to verify compliance with the Quality Control Program and to evaluate its effectiveness.

Audits shall be scheduled based on the critical nature of the activity. The audits and all follow-up action



Copyright ASME International
Provided by IHS under license with ASME
No reproduction or networking permitted without license from IHS
Not for Resale

shall be carried out in accordance with documented procedures.

The results of these audits shall be documented, and reviewed by the management personnel having responsibility in the area audited. The management personnel responsible for the area shall take timely corrective action on the deficiencies found by the audit.

## NM14-1900 TRAINING

The Fabricator shall establish and maintain a training program that identifies and provides for the training of all personnel performing activities affecting quality.

Personnel performing specific assigned tasks shall be qualified for those tasks on the basis of appropriate education, training, and/or experience, as required. Records of training shall be maintained.

## NM14-2000 SERVICING

When servicing is a contractual requirement, the Fabricator shall establish and maintain procedures for performing and verifying that servicing meets the specified requirements.

## NM14-2100 STATISTICAL TECHNIQUES

The Fabricator shall establish and maintain procedures for identifying adequate statistical techniques, as applicable, to verify the acceptability of process capability and equipment characteristics.



Copyright ASME International
Provided by IHS under license with ASME
No reproduction or networking permitted without license from IHS
Not for Resale

(b)

# NONMANDATORY APPENDIX NM-15
# FLAT CORED PLATE DESIGN

## NM15-100 CORED PLATE DESIGN

The design method for cored plates given in this Appendix begins by determining the thickness of a solid plate which will meet the stress and deflection criteria. If the required solid plate thickness is greater than $^3/_4$ in., a cored design should be considered. In the following, the effect of the core is used in the calculation of the effective flexural modulus but not in the calculation of the facial stress. If the core material is end grain balsa, both effects are negligible. The plates considered in this Appendix are assumed to act only in bending, with no stiffening due to membrane action.

## NM15-110 Solid Plate Design

For most simple geometries and loadings, the solution is available in analytical form or in terms of a correlation equation. For more complex cases, a finite element model may be necessary. For thick plates, the elastic properties and allowable bending stress are almost constant and may be obtained either from Table 2A-3 or using the methods of Appendix M-3. In any case, both stress and deflection limited thicknesses should be calculated and the thicker used as the solid plate thickness $T_s$.

## NM15-120 Initial Estimate of Core Thickness

Core thickness $T_c$ should be in the order of the solid plate thickness $T_s$ and available either in full thickness or readily built up of thinner layers bonded together. For each core thickness, a face thickness is determined that will meet the stress and deflection criteria. See Fig. NM15-1.

## NM15-130 Plate Deflections and Stresses

For a plate of constant thickness and material properties, the plate deflection is expressed as a function of the geometry, loading, and boundary conditions divided by the bending rigidity. The moment resultants do not depend upon bending rigidity and are constant for any plate having the same geometry, loading, and boundary conditions.

Since loading and geometry do not change, the deflection of any other plate may be obtained in terms of the first by multiplying it by the inverse ratio of their bending rigidities. This may be used to determine the deflection of a cored plate if its bending rigidity can be calculated. Using the overall thickness of the cored plate as a basis, this is possible if an effective flexural modulus can be estimated. For assumed values of core thickness $T_c$ and face thickness $T_f$, calculate the overall thickness $T_o$ and the effective flexural modulus of the cored plate $E_{cp}$.

$$E_{cp},\ \text{psi} = \frac{24}{T_o^3}\left[\frac{E_{ff}T_f^3}{12} + \frac{E_{ft}T_f}{4}(T_c + T_f)^2\right] + E_c\left(\frac{T_c}{T_o}\right)^3$$

$$T_o,\ \text{in.} = T_c + 2T_f$$

where

$E_c$ = modulus of the core in a direction parallel to the faces
$E_{ff}$ = flexural modulus of the face
$E_{ft}$ = tensile modulus of the face

## NM15-140 Calculate Plate Deflection $\delta_{cp}$, Facial Stress $\sigma_{cp}$, and Core Stress $\sigma_{cc}$

$$\delta_{cp},\ \text{in.} = \delta_s\left(\frac{E_sT_s^3}{E_{cp}T_o^3}\right)$$

$$\sigma_{cp},\ \text{psi} = \sigma_s\left(\frac{T_oT_s^2}{T_o^3 - T_c^3}\right)$$

$$\sigma_{cc},\ \text{psi} = \sigma_{cp}\left(\frac{T_c}{T_c + T_f}\right)\left(\frac{E_c}{E_{ft}}\right)$$



Copyright ASME International
Provided by IHS under license with ASME
No reproduction or networking permitted without license from IHS

Not for Resale

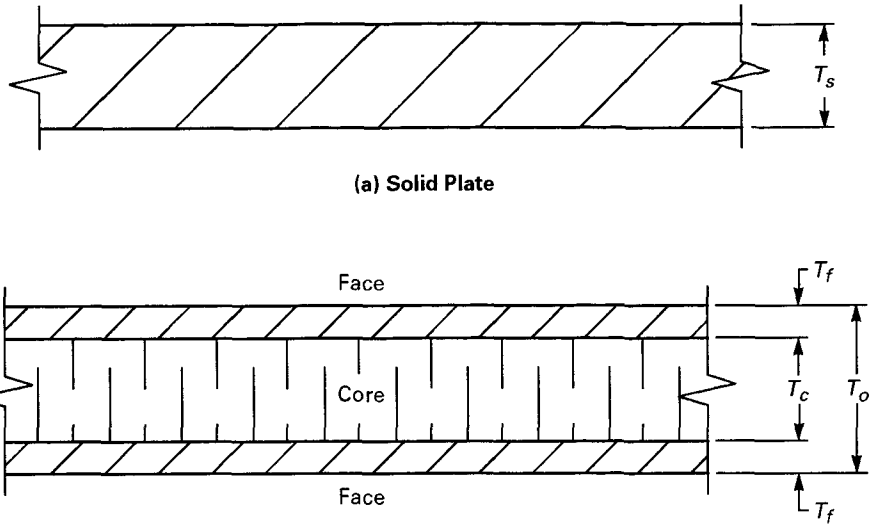


(a) Solid Plate

(b) Cored Plate

**FIG. NM15-1 EQUIVALENT SOLID AND CORED PLATES**

where
$E_s$ = flexural modulus of laminate
$\delta_s$ = maximum deflection
$\sigma_s$ = maximum stress

## NM15-150 Calculate Shear Stress at the Bond Line ($T_{max}$)

$$T_{max}, \text{ psi} = \frac{6(T_c T_f + T_f^2)}{T_o^3 - T_c^3} V_{max}$$

where
$V_{max}$ = shear resultant, lb/in.

## NM15-160 Design Optimization

For a given core thickness, the design may be optimized by changing the thickness of the face and repeating the calculations. If the face thickness becomes excessive, the core thickness is changed.

## NM15-170 Design Example

Design a cored flat bottom for an 8 ft diameter tank operating at a vacuum of 60 in. water column (2.17 psi). The maximum deflection is specified to be 1.0 in. and the maximum stress not to exceed 2,200 psi. The bottom is conservatively assumed to have simply supported edges. By trial it is found that the design conditions are satisfied for a solid plate thickness of 2 in. From Table 2A-3, the flexural modulus for hand lay-up construction is $E_s = 1 \times 10^6$ psi for all thicknesses over $^3/_8$ in. For this calculation, Poisson's ratio $\nu = 0.3$.

*(a) For the Solid Plate*

*(1)* Bending rigidity:

$$D = \frac{E_s T^3}{12(1 - \nu^2)}$$

$$= \frac{1 \times 10^6 (2.0)^3}{12[1 - (0.3)^2]} = 7.326 \times 10^5$$

*(2)* Maximum deflection:

$$\delta_s = PR^4 \frac{5 + \nu}{64D(1 + \nu)}$$

$$= \frac{[2.17(48)^4](5.3)}{64(7.326 \times 10^5)(1.3)} = 1.002 \text{ in.}$$

*(3)* Maximum stress:

$$\sigma_s = \frac{3PR^2}{8T^2}(3 + \nu)$$

$$= \frac{3(2.17)(48)^2}{8(2.0)^2}(3.3) = 1{,}547 \text{ psi}$$



Copyright ASME International
Provided by IHS under license with ASME
No reproduction or networking permitted without license from IHS
Not for Resale

*(4)* Maximum shear resultant:

$$V_{max} = \frac{PR}{2} = \frac{(2.17)(48)}{2} = 52 \text{ lb/in.}$$

*(b) For the Cored Plate.* Estimate the core and face thicknesses as 1.75 in. and 0.375 in. The end grain balsa core is assumed to have a density of 15.5 lb/cu ft and have a modulus of 50,000 psi perpendicular to the grain. From Table 2A-3, the flexural modulus of the face $E_{ff} = 1\times10^6$ psi and its tensile modulus $E_{ft} = 1.5\times10^6$ psi.

*(1)* Plate thickness:

$$T_o = T_c + 2T_f = 1.75 + 2(0.375) = 2.5 \text{ in.}$$

*(2)* Flexural modulus:

$$E_{cp} = \frac{24}{T_o^3}\left[\frac{E_{ff}T_f^3}{12} + \frac{E_{ft}T_f}{4}(T_c + T_f)^2\right] + E_c\left(\frac{T_c}{T_o}\right)^3$$

$$= \frac{24}{(2.5)^3}\left[\frac{(1\times10^6)(0.375)^3}{12} + \frac{(1.5\times10^6)(0.375)}{4}(1.75 + 0.375)^2\right] + (50\times10^3)\left(\frac{1.75}{2.5}\right)^3 = 9.99\times10^5 \text{ psi}$$

*(3)* Maximum deflection:

$$\delta_{cp} = \delta_s\left(\frac{E_sT_s^3}{E_{cp}T_o^3}\right) = (1.0)\frac{1\times10^6(2.0)^3}{9.99\times10^5(2.5)^3} = 0.513 \text{ in.}$$

*(4)* Maximum face stress:

$$\sigma_{cp} = \sigma_s\left(\frac{T_oT_s^2}{T_o^3 - T_c^3}\right) = (1{,}547)\frac{(2.5)(2.0)^2}{(2.5)^3 - (1.75)^3} = 1{,}507 \text{ psi}$$

*(5)* Maximum core stress:

$$\sigma_{cc} = \sigma_{cp}\left(\frac{T_c}{T_c + T_f}\right)\left(\frac{E_c}{E_{ft}}\right) = 1{,}507\left(\frac{1.75}{1.75 + 0.375}\right)\left(\frac{50\times10^3}{1.5\times10^6}\right) = 41 \text{ psi}$$

*(6)* Maximum shear resultant:

$$V_{max} = \frac{PR}{2} = \frac{(2.17)(48)}{2} = 52.1 \text{ lb/in.}$$

where
$P$ = pressure
$R$ = radius

*(7)* Maximum bond shear:

$$T_{max} = 6V_{max}\left(\frac{T_cT_f + T_f^2}{T_o^3 - T_c^3}\right) = 6(52.1)\frac{(1.75)(0.375) + (0.375)^2}{(2.5)^3 - (1.75)^3} = 24.3 \text{ psi}$$

## NM15-180 Discussion

This design method assumes that the face laminates are equal and therefore the neutral axis lies at the center of the cored plate. However, it may be extended to include unequal face laminates. The effect of Poisson's ratio $\nu$ on the bending rigidity of the cored plate has been neglected as second order.



Copyright ASME International
Provided by IHS under license with ASME
No reproduction or networking permitted without license from IHS
Not for Resale

# SI UNITS

The 2000 edition of RTP-1 is based on U.S. Customary (ft-lb) units of measurement which are to be regarded as the standard. This supplement is provided as a convenience to the Standard user and contains SI conversion factors for units contained in the Standard.



Copyright ASME International
Provided by IHS under license with ASME
No reproduction or networking permitted without license from IHS

Not for Resale

## LIST OF SI UNITS FOR USE WITH RTP-1 (00)

| Quantity | Unit | Symbol | Other Units or Limitations |
|---|---|---|---|
| **Space and Time** | | | |
| plane angle | radian | rad | degree (decimalized) |
| length | meter | m | |
| area | square meter | $m^2$ | |
| volume | cubic meter | $m^3$ | liter (L) for liquid only (use without prefix other than in milliliter, mL) |
| time | second | s | minute (min), hour (h), day (d), week, and year |
| **Periodic and Related Phenomena** | | | |
| frequency | hertz | Hz | revolutions per second (r/s) |
| rotational frequency | revolutions per second | $s^{-1}$ | revolutions per minute (r/m) |
| **Mechanics** | | | |
| mass | kilogram | kg | |
| density | kilogram per cubic meter | $kg/m^3$ | |
| moment of inertia | kilogram · $meter^2$ | kg · $m^2$ | |
| force | newton | N | |
| moment of force (torque) | newton-meter | N · m | |
| pressure and stress | pascal | Pa | (pascal = newton per square meter) |
| energy, work | joule | J | kilowatt-hour (kW · h) |
| power | watt | W | |
| impact strength | joule | J | |
| section modulus | $meter^3$ | $m^3$ | |
| moment of section (second moment of area) | $meter^4$ | $m^4$ | |
| fracture toughness | Pa · $\sqrt{m}$ | | |
| **Heat** | | | |
| temperature — thermodynamic [Note (1)] | kelvin | K | degree Celsius (°C) |
| temperature — other than thermodynamic | degree Celsius | °C | kelvin (K) |
| linear expansion coefficient | meter per meter-kelvin | $K^{-1}$ | $°C^{-1}$ |
| quantity of heat | joule | J | |
| heat flow rate | watt | W | |
| thermal conductivity | watt per meter-kelvin | W/(m · K) | W/(m · °C) |
| thermal diffusivity | square meter per second | $m^2/s$ | |
| specific heat capacity | joule per kilogram-kelvin | J/(kg · K) | J/(kg · °C) |
| **Electricity and Magnetism** | | | |
| electric current | ampere | A | |
| electric potential | volt | V | |
| current density | ampere per $meter^2$ | $A/m^2$ | |
| magnetic field strength | ampere per meter | A/m | |

GENERAL NOTE:
Conversion factors between SI units and U.S. customary are given in SI-1, "ASME Orientation and Guide for Use of SI (Metric) Units," and IEEE/ASTM SI-10.

NOTE:
(1) Preferred use for temperature and temperature interval is degrees Celsius (°C), except for thermodynamic and cryogenic work where kelvins may be more suitable. For temperature interval, 1 K = 1°C exactly.



Copyright ASME International
Provided by IHS under license with ASME
No reproduction or networking permitted without license from IHS Not for Resale

(00)

## COMMONLY USED CONVERSION FACTORS

| Quantity | To Convert From | To | Multiply by [Note (1)] | |
|---|---|---|---|---|
| plane angle | degree | rad | 1.745 329 | E–02 |
| length | in | m | 2.54* | E–02 |
| | ft | m | 3.048* | E–01 |
| | yd | m | 9.144* | E–01 |
| area | $in^2$ | $m^2$ | 6.451 6* | E–04 |
| | $ft^2$ | $m^2$ | 9.290 304* | E–02 |
| | $yd^2$ | $m^2$ | 8.361 274 | E–01 |
| volume | $in^3$ | $m^3$ | 1.638 706 | E–05 |
| | $ft^3$ | $m^3$ | 2.831 685 | E–02 |
| | US gallon | $m^3$ | 3.785 412 | E–03 |
| | Imperial gallon | $m^3$ | 4.546 09 | E–03 |
| | liter | $m^3$ | 1.0* | E–03 |
| mass | lbm | kg | 4.535 924 | E–01 |
| | ton (metric) (mass) | kg | 1.000 00* | E+03 |
| | ton (short 2000 lbm) | kg | 9.071 847 | E+02 |
| force | kgf | N | 9.806 65* | E+00 |
| | lbf | N | 4.448 222 | E+00 |
| bending, torque | kgf · m | N · m | 9.806 65* | E+00 |
| | lbf · in | N · m | 1.129 848 | E–01 |
| | lbf · ft | N · m | 1.355 818 | E+00 |
| pressure, stress | $kgf/m^2$ | Pa | 9.806 65* | E+00 |
| | $lbf/ft^2$ | Pa | 4.788 026 | E+01 |
| | $lbf/in^2$ (psi) | Pa | 6.894 757 | E+03 |
| | $kips/in^2$ | Pa | 6.894 757 | E+06 |
| | bar | Pa | 1.0* | E+05 |
| energy, work | Btu (IT) [Note (2)] | J | 1.055 056 | E+03 |
| | ft · lbf | J | 1.355 818 | E+00 |
| power | hp (550 ft · lbf/s) | W | 7.456 999 | E+02 |
| fracture toughness | ksi $\sqrt{in}$ | Pa · $\sqrt{m}$ | 1.098 843 | E+06 |
| temperature | °C | K | $t_K = t_C + 273.15$ | |
| | °F | K | $t_K = (t_F + 459.67)/1.8$ | |
| | °F | °C | $t_C = (t_F - 32)/1.8$ | |
| temperature interval | °C | K | 1.0* | E+00 |
| | °F | K or °C | 5.555 555 | E–01 |

GENERAL NOTES:
(a) Care should be taken when converting formulas or equations that contain constant terms or factors. The value of these terms must be understood and may also require conversion.
(b) See IEEE/ASTM SI-10 for other conversion factors.

NOTES:
(1)(a) Relationships that are exact in terms of the base units are followed by a single asterisk.
(b) The factors are written as a number greater than 1 and less than 10 with 6 or less decimal places. The number is followed by the letter E (for exponent), a plus or minus symbol, and two digits which indicate the power of 10 by which the number must be multiplied to obtain the correct value. For example: 3.523 907 E–02 is $3.523\ 907 \times 10^{-2}$ or 0.035 239 07.
(2) International Table



Copyright ASME International
Provided by IHS under license with ASME
No reproduction or networking permitted without license from IHS
Not for Resale

# INDEX

Accreditation, 1-520, Part 8
Acetone sensitivity test, 6-910, App. NM-6 Sec. 6.1.2
Acoustic emission testing, 3B-500(c), 6-950(g), App. M-8

Barcol hardness, 6-910, App. NM-6 Sec. 6.1.1

Certificate of Authorization, 8-400
Critical service, 1-210

Demonstration vessel, 7-800, App. M-6
Design, 3-200
  design by rules, Subpart 3A
    body flanges, 3A-500, App. NM-2
    design for external pressure, 3A-300
      cylindrical shells, 3A-310
      stiffening rings, 3A-330, Fig. 4-4
      torispherical heads, 3A-320, App. NM-11
    design for total internal pressure, 3A-200
      minimum thickness — conical heads, 3A-250
      minimum thickness — cylindrical shells, 3A-210
      minimum thickness — flat bottom heads, 3A-260, Fig. 4-3
      minimum thickness — torispherical heads, 3A-230, Fig. 4-2
    hold-down lugs, 3A-460, App. NM-4
    loadings, 3A-100
    reinforcement of circular openings, 3A-700
    secondary bond shear stress, 3A-800
    seismic, wind, and snow loadings, 3A-400, App. NM-3
    vessels supported by shell attachments, 3A-600, App. NM-5
  design by stress analysis, Subpart 3B
    design, 3B-400
    design acceptability, 3B-200
    external pressure, 3B-600
    loading, 3B-300
    stress criteria, 3B-500
  design examples, App. NM-1

Exclusions, 1-120

Fabrication, 4-100
  flanged nozzles, 4-400; Figs. 4-6, 4-7, 4-11
  large diameter body flanges, 4-200
  manways, 4-500, Table 4-2
  reinforcement of cutouts, 4-600; Figs. 4-8, 4-9, 4-10
  shear bond length, Table 4-1
  shell joints, 4-300, Fig. 4-5
  tolerances, 4-700, Fig. 4-1, Table 4-3
Fabricator's Data Report, 1-520, Table 1-2
Fabricator's Design Report, 1-300
Fabricator's Partial Data Report, 1-520, Table 1-3
Fiber reinforcement, 2-320, App. M-1

Glossary, App. M-9

Handling and shipping, App. NM-8
Heat distortion temperature, 2-300(b), 2-310

Inspection — acceptance by User's inspector, App. NM-7
Inspection and tests, 6-100
  dimensions and laminate thickness checks, 6-920
  laminate reinforcing content tests, 6-930
  physical property tests, 6-930
  pressure tests, 6-950
  resin cure tests, 6-910
  visual inspection, 6-940, Table 6-1
Inspector, 1-400, NM10-400
inspector, 1-400
Installation, App. NM-9

Laminate
  composition, 2-200, 2A-220
    inner surface — corrosion resistant barrier, 2A-221, 2B-110
    interior layer — corrosion resistant barrier, 2A-222, 2B-120
    outer surface, 2A-224, 2B-140
    structural layer, 2A-223, 2B-130
  demonstration, 7-600
  description, contact molded, Tables 2A-1, 2A-2
  design basis, 2A-300
  physical and mechanical properties, 2A-300, 2B-200
  test methods, 2A-400, 2B-300
Lamination Analysis Method, M3-100



Copyright ASME International
Provided by IHS under license with ASME
No reproduction or networking permitted without license from IHS
Not for Resale

Limitations
pressure, 1-130
temperature, 1-130
Log sheets
common additives, Table M2G-1
fabric reinforcement, Table M1C-1
mat and veil reinforcement, Table M1A-1
milled fiber reinforcement, Table M1D-1
resin and curing agents, Tables M2F-1, M2F-2
roving reinforcement, Table M1B-1

Matrix testing, M2-100
room temperature gel time, M2E-100
specific gravity, M2B-100
viscosity, M2C-100, M2D-100

Nameplates — construction and attachment, 1-530
ASME RTP-1 Symbol, 1-531, Fig. 1-1
design requirements, 1-550
information and marking, 1-540

Overpressure protection, 5-200
discharge lines from pressure relief devices, 5-800
installation practices, 5-500
location of overpressure protection devices, 5-400
overpressure device set pressure, 5-600
relief device sizing, 5-700
responsibility for design and selection, 5-900
types of overpressure protection, 5-300

Qualification
Laminators, M5-300, M5-410
Secondary Bonders, M5-400, M5-420
Quality Control Manual, 6-300, M4-100
Quality Control Program, 6-800, App. M-4, App. NM-6

Receiving procedures
mat, M1A-100
matrix materials (resins), M2-100
milled fibers, M1D-100
roving, M1B-100
woven roving fabric, unidirectional fabric, and nonwoven biaxial fabric, M1C-100
Reference documents, App. M-10
Repair procedures, App. M-7
Reports
Fabricator's Data Report, Table 1-2
Fabricator's Partial Data Report, Table 1-3
Requirements and responsibilities of User, Fabricator, and Inspector, App. NM-10
Resin matrix, 2-310, M2-100

Scope, 1-110
Shop qualification, Part 7
demonstration laminates, 7-600, 7-700
demonstration vessel, 7-800, M6-100; Figs. M6-1, M6-2
facilities and equipment, 7-300
Standard laminates
additional compositions, 2-300
compositions, 2-200
Stress analysis methods, App. NM-13
cylindrical shells, App. NM-13 Article A
discontinuity stresses, App. NM-13 Article D
flat circular heads, App. NM-13 Article C
spherical shells, App. NM-13 Article B

Tests
physical properties, 6-930
Secondary Bonders, App. M-5
Thickness
checking, 6-920
tolerance, 6-920
Tolerances
fabrication, 4-700, Fig. 4-1
laminate thickness, Subpart 2C

User's Basic Requirements Specification (UBRS), 1-200, Table 1-1
design conditions, 1-200, Table 1-1(5.1)
material selection, 1-200, Table 1-1(3.1)

Viscosity testing
Brookfield method, M2D-100, Table M2C-1
Gardner–Holdt method, M2C-100, Table M2C-1
thixotropic index, M2D-400



Copyright ASME International
Provided by IHS under license with ASME
No reproduction or networking permitted without license from IHS

Not for Resale

# ASME RTP-1 INTERPRETATIONS

## Replies to Technical Inquiries
## January 2002–July 2002

### INTRODUCTION

As a service to persons who use the RTP-1 Standard, the RTP Committee renders interpretations of the requirements upon request. The procedure for requesting an interpretation is described in the following paragraphs.

The interpretations include all replies that have been approved by the RTP Main Committee in response to inquiries concerning interpretation of the Standard.

An interpretation applies either to the edition and addenda in effect on the date of issuance of the interpretation or the edition and addenda stated in the interpretation. Subsequent revisions to the Standard may supersede the interpretation.

### PROCEDURE FOR REQUESTING INTERPRETATIONS

Upon request, the RTP Committee will render an interpretation of any requirement of RTP-1. Interpretations can only be rendered in response to a written request, which should be addressed to: Secretary, RTP Main Committee, The American Society of Mechanical Engineers, Three Park Avenue, New York, NY 10016-5990.

The request for interpretation should be clear and unambiguous. It is further recommended that the inquirer submit his or her request using the following format:

*(a) Subject.* Cite the applicable paragraph number(s) and/or give a concise description of the subject.

*(b) Question.* Phrase the question as a request for an interpretation of a specific requirement suitable for general understanding and use, not as a request for an approval of a proprietary design or situation. The inquirer may also include any plans or drawings that are necessary to explain the question; however, they should not contain proprietary names or information.

Requests that are not in this format may be rewritten in this format prior to being answered, which may inadvertently change the original intent of the request.

ASME procedures provide for reconsideration of an interpretation when or if additional information is available that the inquirer believes might affect the interpretation. Further, persons aggrieved by an interpretation may appeal to the cognizant ASME committee or subcommittee. ASME does not "approve," "certify," "rate," or "endorse" any item, construction, proprietary device, or activity.



Copyright ASME International
Provided by IHS under license with ASME
No reproduction or networking permitted without license from IHS
Not for Resale

Copyright ASME International
Provided by IHS under license with ASME
No reproduction or networking permitted without license from IHS
Not for Resale

## Interpretation: 6-1

Subject: RTP-1–1995 Edition and RTP-1b–1997, Paras. 2A-300(c) and 2C-130

Date Issued: March 1, 2001

Question: In meeting the requirements in para. 2A-300(c) in RTP-1, may the Fabricator's design basis laminate thickness results be greater than 115% of the nominal thickness listed in Tables 2A-1 and 2A-2?

Reply: No.

## Interpretation: 6-2

Subject: RTP-1e–1999, Mandatory Appendix M-14

Date Issued: May 3, 2001

Question: With the exception of paras. 7-800 and M8-300(b), Table M8-1, and Figs. M8-1 and M8-2, do all Parts and Mandatory Appendices of the RTP-1 Standard (latest edition and addenda) apply to RTP-1 stamped dual laminate vessels?

Reply: Yes.



Copyright ASME International
Provided by IHS under license with ASME
No reproduction or networking permitted without license from IHS
Not for Resale

## Interpretation: 7-1

Subject: RTP-1–1995 Edition and RTP-1b–1997, Table 2A-3, para. 2B-200(e), and para. 7-700(b)(3)

Date Issued: February 6, 2002

Question (1): Are the minimum values listed in Table 2A-3 for individual tests or an average result?

Reply (1): This is determined by test method.

Question (2): For a minimum value, the average of five samples, given in Table 2A-3 (e.g., flexural modulus at $0.7\times10^6$), is it permissible to accept an actual result which is lower (e.g., $0.65\times10^6$)?

Reply (2): No.

Question (3): Are there different requirements in RTP-1 for design basis laminates and demonstration laminates?

Reply (3): Yes. See Subparts 2A and 2B for design basis laminates, and paras. 7-600 through 7-700 for demonstration laminates.

## Interpretation: 7-2

Subject: RTP-1–1995 Edition and RTP-1e–1999, para. 2A-300(a)(1)

Date Issued: July 17, 2002

Question: May the minimum values of design tensile strength and design tensile modulus from Table 2A-3 of RTP-1 be used for Type I and Type II standard laminates at temperatures no greater than 180°F, based upon nominal thickness, when the corrosion barrier is excluded from the design as a contributor to the structural strength of the laminate per para. 6-930(d)(5)(d) and proof tests of the as-constructed laminate are not required?

Reply: Yes, provided the provisions of para. 6-930(d) are met.

## Interpretation: 7-3

Subject: RTP-1–1995 Edition and RTP-1e–1999, Fig. 4-6, Appendix NM-2, and Appendix NM-12

Date Issued: July 17, 2002

Question (1): May gaskets having other than full-face geometry be used in flanges designed by Nonmandatory Appendices NM-2 or NM-12 of RTP-1?

Reply (1): No.

Question (2): May gaskets having other than full-face geometry be used in Fig. 4-6 flanges without justification by Subpart 3B of RTP-1?

Reply (2): No.



Copyright ASME International
Provided by IHS under license with ASME
No reproduction or networking permitted without license from IHS
Not for Resale

# ASME Services

ASME is committed to developing and delivering technical information. At ASME's Information Central, we make every effort to answer your questions and expedite your orders. Our representatives are ready to assist you in the following areas:

ASME Press
*Codes & Standards*
Credit Card Orders
IMechE Publications
Meetings & Conferences
Member Dues Status
Member Services & Benefits
Other ASME Programs
Payment Inquiries
Professional Development
Short Courses
Publications
Public Information
Self-Study Courses
Shipping Information
Subscriptions/Journals/Magazines
Symposia Volumes
Technical Papers

**How can you reach us? It's easier than ever!**

There are four options for making inquiries* or placing orders. Simply mail, phone, fax, or E-mail us and an Information Central representative will handle your request.

*Mail*
**ASME**
22 Law Drive, Box 2900
Fairfield, New Jersey
07007-2900

*Call Toll Free*
**US & Canada:** 800-THE-ASME
(800-843-2763)
**Mexico:** 95-800-THE-ASME
(95-800-843-2763)
**Universal:** 973-882-1167

*Fax-24 hours*
973-882-1717
973-882-5155

*E-Mail-24 hours*
Infocentral@asme.org

* Information Central staff are not permitted to answer inquiries about the technical content of this code or standard. Information as to whether or not technical inquiries are issued to this code or standard is shown on the copyright page. All technical inquiries must be submitted in writing to the staff secretary. Additional procedures for inquiries may be listed within.

--`,,,`,,,-`-`,,`,,`,`,,,---
Copyright ASME International
Provided by IHS under license with ASME
No reproduction or networking permitted without license from IHS
Not for Resale

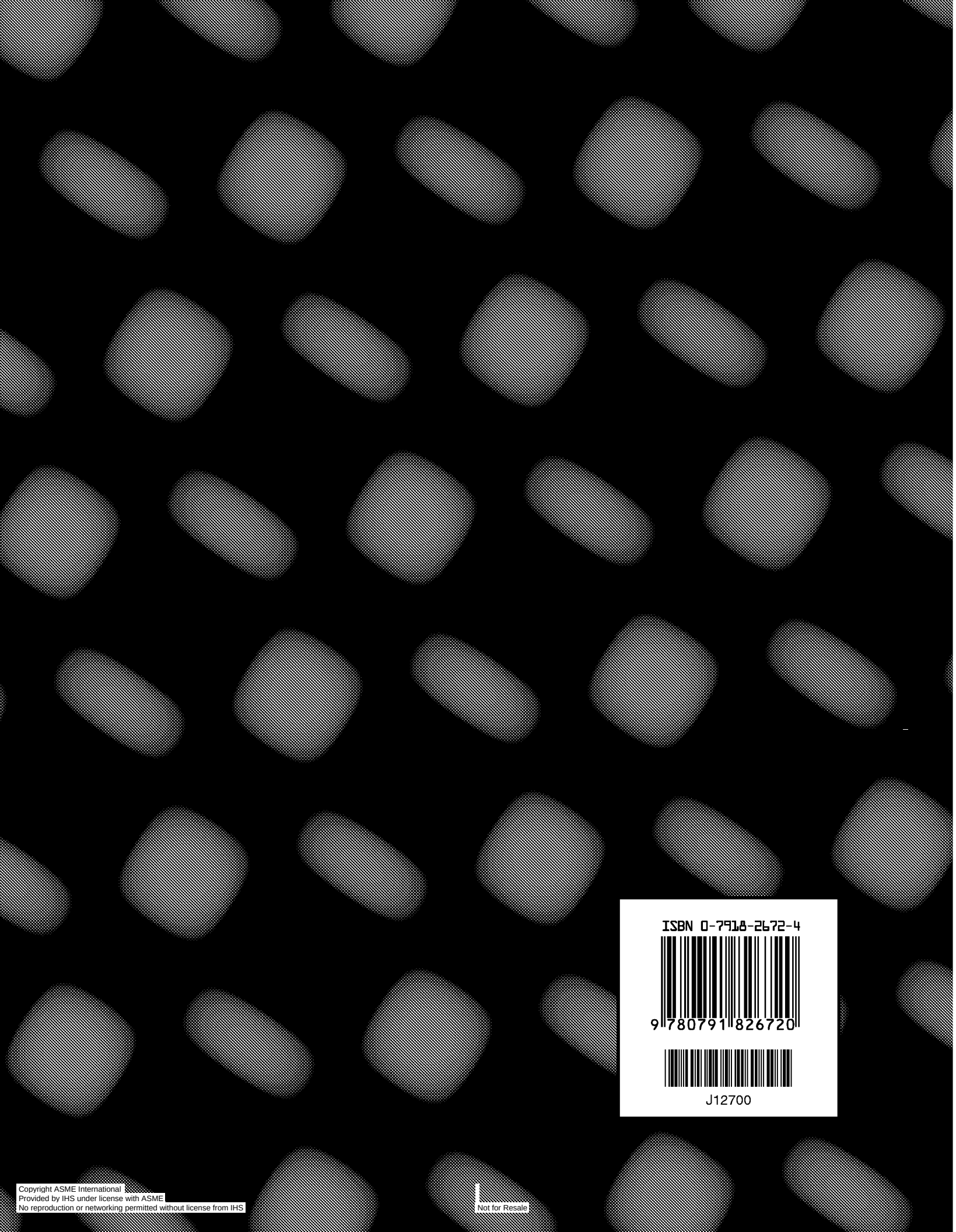
ISBN 0-7918-2672-4

9 780791 826720

J12700

Copyright ASME International
Provided by IHS under license with ASME
No reproduction or networking permitted without license from IHS

Not for Resale