AN AMERICAN NATIONAL STANDARD

ASME
PTC 6A-2000

[Revision of ANSI/ASME
PTC 6A-1982 (R1988)]

Appendix A to PTC 6, The Test Code for Steam Turbines

PERFORMANCE
TEST CODES



The American Society of
Mechanical Engineers

Copyright ASME International
Provided by IHS under license with ASME
No reproduction or networking permitted without license from IHS

Not for Resale

AN AMERICAN NATIONAL STANDARD

ASME
PTC 6A-2000

[Revision of ANSI/ASME
PTC 6A-1982 (R1988)]

Appendix A to PTC 6, The Test Code for Steam Turbines



The American Society of
Mechanical Engineers

PERFORMANCE
TEST CODES

Copyright ASME International
Provided by IHS under license with ASME
No reproduction or networking permitted without license from IHS

Not for Resale

Date of Issuance: July 2, 2001

This document will be revised when the Society approves the issuance of the next edition. There will be no Addenda issued to ASME PTC 6A-2000.

Please note: ASME issues written replies to inquiries concerning interpretation of technical aspects of this document. PTC 6A-2000 is being issued with an automatic subscription service to the interpretations that will be issued to it up to the publication of the 2005 edition.

ASME is a registered trademark of The American Society of Mechanical Engineers.

This code or standard was developed under procedures accredited as meeting the criteria for American National Standards. The Standards Committee that approved the code or standard was balanced to assure that individuals from competent and concerned interests have had an opportunity to participate. The proposed code or standard was made available for public review and comment that provides an opportunity for additional public input from industry, academia, regulatory agencies, and the public-at-large.

ASME does not "approve," "rate," or "endorse" any item, construction, proprietary device, or activity.

ASME does not take any position with respect to the validity of any patent rights asserted in connection with any items mentioned in this document, and does not undertake to insure anyone utilizing a standard against liability for infringement of any applicable letters patent, nor assume any such liability. Users of a code or standard are expressly advised that determination of the validity of any such patent rights, and the risk of infringement of such rights, is entirely their own responsibility.

Participation by federal agency representative(s) or person(s) affiliated with industry is not to be interpreted as government or industry endorsement of this code or standard.

ASME accepts responsibility for only those interpretations issued in accordance with governing ASME procedures and policies, which precludes the issuance of interpretations by individuals.

No part of this document may be reproduced in any form,
in an electronic retrieval system or otherwise,
without the prior written permission of the publisher.

The American Society of Mechanical Engineers
Three Park Avenue, New York, NY 10016-5990

Copyright © 2001 by
THE AMERICAN SOCIETY OF MECHANICAL ENGINEERS
All Rights Reserved
Printed in U.S.A.

Copyright ASME International
Provided by IHS under license with ASME
No reproduction or networking permitted without license from IHS

Not for Resale

FOREWORD

ASME Performance Test Code 6 on Steam Turbines (PTC 6-1996) states that numerical examples of corrections to test performance for the effect of deviations of operating conditions from those specified are given in a separate publication of the PTC 6 Committee. This Appendix, PTC 6A, Sample Calculations, fulfills the Committee's obligation as stated in the Code.

The 1996 version of the Steam Turbines (PTC 6) incorporates the Interim Test Code for an Alternative Procedure for Testing Steam Turbines (PTC 6.1-1984) with the 1976 version of the Test Code. This Appendix provides sample calculations using both methods for a reheat regenerative cycle turbine. In addition, sample calculations have been added for a non-reheat regenerative cycle turbine, an automatic extraction condensing cycle turbine, a refurbished low pressure turbine, and determination of the coefficient of discharge of a throat-tap nozzle. Instrumentation listed has been updated to reflect those currently used.

This newly revised Appendix to the Test Code, now named Appendix A to Test Code for Steam Turbines, PTC 6A-2000, was approved by the Board on Performance Test Codes on July 14, 2000.

It was approved as an American National Standard by the Board of Standards Review on November 17, 2000.

All ASME codes are copyrighted, with all rights reserved to the Society. Reproduction of this or any other ASME code is a violation of Federal Law. Legalities aside, the user should appreciate that the publishing of the high-quality codes that have typified ASME documents requires a substantial commitment by the Society. Thousands of volunteers work diligently to develop these codes, participating on their own or with a sponsor's assistance to produce documents that meet the requirements of an ASME consensus standard. The codes are very valuable pieces of literature to industry and commerce, and the effort to improve these 'living documents' and develop additional needed codes must be continued. The monies spent for research and further code development, administrative staff support, and publication are essential and constitute a substantial drain on ASME. The purchase price of these documents helps offset these costs. User reproduction undermines this system and represents an added financial drain on ASME. When extra copies are needed, you are requested to call or write the ASME Order Department, 22 Law Drive, Box 2300, Fairfield, New Jersey 07007-2300, and ASME will expedite delivery of such copies to you by return mail. Please instruct your people to buy required test codes rather than copy them. Your cooperation in this matter is greatly appreciated.

Copyright ASME International
Provided by IHS under license with ASME
No reproduction or networking permitted without license from IHS
Not for Resale

NOTICE

All Performance Test Codes **MUST** adhere to the requirements of **PTC 1, GENERAL INSTRUCTIONS.** The following information is based on that document and is included here for emphasis and for the convenience of the user of this Code. It is expected that the Code user is fully cognizant of Parts I and III of PTC 1 and has read them prior to applying this Code.

ASME Performance Test Codes provide test procedures which yield results of the highest level of accuracy consistent with the best engineering knowledge and practice currently available. They were developed by balanced committees representing all concerned interests. They specify procedures, instrumentation, equipment operating requirements, calculation methods, and uncertainty analysis.

When tests are run in accordance with this Code, the test results themselves, without adjustment for uncertainty, yield the best available indication of the actual performance of the tested equipment. ASME Performance Test Codes do not specify means to compare those results to contractual guarantees. Therefore, it is recommended that the parties to a commercial test agree **before starting the test and preferably before signing the contract** on the method to be used for comparing the test results to the contractual guarantees. It is beyond the scope of any code to determine or interpret how such comparisons shall be made.

Copyright ASME International
Provided by IHS under license with ASME
No reproduction or networking permitted without license from IHS
Not for Resale

PERSONNEL OF PERFORMANCE TEST CODE COMMITTEE NO. 6 ON STEAM TURBINES

(The following is the roster of the Committee at the time of approval of this Appendix.)

OFFICERS

Bezalel Bornstein, *Chair*
Edwin J. Brailey, Jr., *Vice Chair*
Jack H. Karian, *Secretary*

COMMITTEE PERSONNEL

Paul G. Albert, General Electric Co.
John A. Booth, General Electric Co. (retired)
Bezalel Bornstein, Consultant
Edwin J. Brailey, Jr., Stowe Engineering Corp.
Thomas M. Brown, Ontario Power Generation
Norman R. Deming, Westinghouse Electric Corp. (retired)
Arturo J. Egli, ABB Alstom Power Generation
Alfonso V. Fajardo, Jr., Siemens Power Group
Christopher J. Haynes, New England Power Co.
Dale C. Karg, Santee Cooper
Jack H. Karian, American Society of Mechanical Engineers
Charles H. Kostors, Elliott Turbomachinery Co., Inc., Ebara Group
Joseph S. Lamberson, Dresser-Rand Co.
Randall W. Moll, *Alternate,* Dresser-Rand Co.
James B. Nystrom, Alden Research Laboratory
Surinder S. Sandhu, Consultant
Charles B. Scharp, Baltimore Gas and Electric Co. (retired)
Kevin Stone, *Alternate,* General Electric Company
Einar J. Sundstrom, Dow Chemical USA (retired)
Leif Svenson, *Alternate,* Santee Cooper
Jason A. Zoller, Black & Veatch Corp.

Copyright ASME International
Provided by IHS under license with ASME
No reproduction or networking permitted without license from IHS
Not for Resale

BOARD ON PERFORMANCE TEST CODES

OFFICERS

Phillip M. Gerhart, *Chair*
Sam J. Korellis, *Vice Chair*
William O. Hays, *Secretary*

Paul G. Albert	Todd S. Jonas
Roy P. Allen	David R. Keyser, Ph.D.
Ronald L. Bannister	Patrick M. McHale
David S. Beachler	Joseph W. Milton
Bezalel Bornstein	George J. Mittendorf, Jr.
John M. Burns	Steven P. Nuspl
Cary Campbell	Arthur L. Plumley, Ph.D.
Matthew J. Dooley	Robert R. Priestley
Arturo J. Egli	John Siegmund
Jeffrey R. Friedman	Joseph A. Silvaggio, Jr.
Gordon J. Gerber	W. Glen Steele, Ph.D.
Yaacov Goland	John C. Westcott
Thomas C. Heil	John G. Yost

Copyright ASME International
Provided by IHS under license with ASME
No reproduction or networking permitted without license from IHS
Not for Resale

CONTENTS

Foreword iii
Notice v
Committee Roster vii
Board Roster viii

Section

1 Introduction 1
2 Definitions and Description of Terms 3
3 Guidance for Comparison of Test Results 9
4 Flow Measurement by the Enthalpy-Drop Method 11
5 Sample Calculation for the Reynolds Number Extrapolation of a Calibrated ASME Test Flow Section 13
6 Sample Calculations for a Test of a Complete Expansion Condensing Turbine Using U.S. Customary Units 19
6A Sample Calculations for a Test of a Complete Expansion Condensing Turbine Using SI Units 27
7 Sample Calculation for a Test of a Non-Reheat Regenerative Cycle Turbine 33
8 Sample Calculation for a Test of a Reheat-Regenerative Cycle Turbine 47
8A Sample Calculation for a Test of a Reheat-Regenerative Cycle Using the Alternative Procedure With Final Feedwater Flow Measurement 75
9 Sample Calculation for a Steam Turbine Operating in a Nuclear Cycle 89
10 Sample Calculation for a Test of an Automatic Extraction Non-condensing Turbine 139
11 Sample Calculation for a Test of an Automatic Extraction Condensing Turbine 147
12 Sample Calculation for a Test of a Variable Speed Mechanical Drive Turbine 155
13 Sample Calculation for a Test of a Refurbished LP Turbine Using U.S. Customary Units 163

Figures

2.1 Temperature-Entropy Diagrams 6
3.1 Cycle Corrections 10
4.1 High Pressure Leakoff From the No. 1 Gland Discharged Into the Turbine Exhaust Line 12
5.1 Extrapolation of Calibration Data Using PTC 6-1996 Procedures 15
6.1 Specified Performance 20

Copyright ASME International
Provided by IHS under license with ASME
No reproduction or networking permitted without license from IHS
Not for Resale

6.2 Instrumentation and Flow Diagram: Complete Expansion Condensing Turbine . . . 21
6.3 Generator Electrical Losses . . . 22
6.4 Throttle Temperature Correction . . . 24
6.5 Throttle Pressure Correction . . . 24
6.6 Exhaust Pressure Correction . . . 25
6A.1 Specified Performance . . . 28
6A.2 Generator Electrical Losses . . . 29
6A.3 Throttle Temperature Correction . . . 31
6A.4 Throttle Pressure Correction . . . 31
6A.5 Exhaust Pressure Correction . . . 32
7.1 Guarantee Heat Balance . . . 34
7.2 Determination of Test Heat Rate at Guaranteed Output . . . 35
7.3 Correction for Main Steam Desuperheating Spray Flow . . . 39
7.4 Final Feedwater Temperature Correction . . . 39
7.5 Throttle Pressure Correction Factors: Heat Rate . . . 41
7.6 Throttle Pressure Correction Factors: Output . . . 41
7.7 Throttle Temperature Correction Factors: Heat Rate . . . 42
7.8 Throttle Temperature Correction Factors: Output . . . 42
7.9 Exhaust Pressure Correction Factor . . . 43
8.1 Test Cycle . . . 48
8.2 Extraction Flows to High Pressure Heaters . . . 49
8.3 Extraction Flows to Low Pressure Heaters . . . 51
8.4 Turbine Expansion Line . . . 52
8.5 Generator Losses . . . 55
8.6 Exhaust Losses . . . 56
8.7 First Approximation (Test Turbine in Specified Cycle) . . . 58
8.8 Second Approximation (Test Turbine in Specified Cycle) . . . 63
8.9 Throttle Pressure Correction Factors . . . 68
8.10 Throttle Temperature Correction Factors . . . 69
8.11 Reheat Temperature Correction Factors . . . 70
8.12 Reheater Pressure Drop Correction Factors . . . 71
8.13 Exhaust Pressure Correction Factor . . . 72
8.14 Specified Heat Balance . . . 73
8.15 Heat Rate Versus Load . . . 74
8A.1 Reheat-Regenerative Test Cycle . . . 77
8A.2 Diagram for No. 7 Heater Extraction Steam Flow . . . 78
8A.3 Final Feedwater Temperature Correction . . . 79
8A.4 Auxiliary Extraction Correction (Extraction Downstream of Re-Heater) . . . 80
8A.5 Correction for Auxiliary Extraction From Cold Reheat . . . 81
8A.6 Corrections for Main Steam and Reheat Steam Desuperheating Flow . . . 82
8A.7 Condensate Subcooling Correction . . . 83
9.1 Specified Heat Rate Curve . . . 90
9.2 Test Cycle Diagram . . . 91
9.3 Expansion Line and Steam Conditions Leaving No. 6 Heater Extraction Stage Point . . . 92
9.4 No. 6 Heater Extraction Flow and Enthalpy . . . 93
9.5 No. 5 Heater Extraction Flow and Enthalpy . . . 94
9.6 No. 4 Heater Extraction Flow and Enthalpy . . . 95
9.7 No. 3 Heater Extraction Flow . . . 96
9.8 No. 2 Heater Extraction Flow and Enthalpy . . . 97
9.9 No. 1 Heater Extraction Flow . . . 98
9.10 Steam Flow to Moisture Separator Reheater . . . 98

Copyright ASME International
Provided by IHS under license with ASME
No reproduction or networking permitted without license from IHS
Not for Resale

9.11 Nomenclature for High Pressure Turbine Expansion 101
9.12 Expansion Line and Steam Conditions Leaving No. 5 Heater Extraction Stage Point 103
9.13 Expansion Line and Steam Conditions Leaving No. 3 Heater Extraction Stage Point 106
9.14 Expansion Line and Steam Conditions Leaving No. 2 Heater Extraction Stage Point 108
9.15 Expansion Line and Steam Conditions Leaving No. 1 Heater Extraction Stage Point 109
9.16 H-S Diagram of Test Cycle High Pressure Turbine 112
9.17 H-S Diagram of Test Cycle Low Pressure Turbine 113
9.18 Test Turbine in Specified Cycle 115
9.19 Expansion Line and Steam Conditions Leaving No. 4 Heater Extraction Stage Point 121
9.20 Throttle Pressure Correction to Heat Rate and Load 122
9.21 Throttle Temperature Correction to Heat Rate and Load 123
9.22 Exhaust Pressure Correction to Heat Rate 124
9.23 H-S Diagram From Test Turbine in Specified Cycle, High Pressure Turbine 125
9.24 H-S Diagram From Test Turbine in Specified Cycle, Low Pressure Turbine 126
9.25 Exhaust Loss 127
9.26 Generator Losses 127
10.1 Expected Performance 140
10.2 Leakoff Flows 141
10.3 Flow and Instrumentation Diagram: Automatic Extraction Noncondensing Turbine 142
10.4 Generator Losses 143
10.5 Steam Conditions Correction Factors 144
11.1 Expected Performance 148
11.2 Flow and Instrumentation Diagram 149
11.3 Generator Electrical Losses 150
11.4 Exhaust Pressure Correction 151
11.5 Extraction Pressure Correction 152
11.6 Throttle Temperature Correction 153
11.7 Throttle Pressure Correction 154
12.1 Flow and Instrumentation Diagram 156
12.2 Throttle Steam Rate Versus Turbine Shaft Output 157
12.3 Steam Rate Correction Factor Versus Speed 159
12.4 Steam Rate Correction Factor Versus Inlet Pressure 159
12.5 Steam Rate Correction Factor Versus Inlet Temperature 160
12.6 Steam Rate Correction Factor Versus Exhaust Pressure 161
13.1 Location of Test Instrumentation for Test of Refurbished LP Turbine 166

Tables

4.1 Calculation of Throttle Flow 12
5.1 Calibration Example Data 14
6.1 Steam Rate Corrrections 23
7.1 Test Data 37
7.2 Group 1 Corrections 40
7.3 Deviations of Group 2 Variables 44

Copyright ASME International
Provided by IHS under license with ASME
No reproduction or networking permitted without license from IHS
Not for Resale

7.4	Group 2 Corrections	44
8.1	Calculation of Expansion-Line End Point (ELEP)	54
8.2	Steam Flows Through the Stages of the Turbine in the First Approximation (For the First Iteration)	60
8.3	Test Relationships	61
8.4	Revised Extraction Pressures: First Approximation	62
8.5	Steam Flows Through the Stages of the Turbine in the Second Approximation (For the First Iteration)	64
8.6	Revised Extraction Pressures: Second Approximation	65
8.7	Turbine Heat Rate and Generator Output	66
8.8	Correction Factors	66
8A.1	Comparison Between Test Cycle and Specified Cycle, Group 1 Variables	83
8A.2	Group 1 Corrections	86
8A.3	Comparison Between Test Cycle and Specific Cycle, Group 2 Variables	86
8A.4	Group 2 Corrections	87
9.1	Calculation of Low Pressure Turbine Exhaust Enthalpy	100
9.2	Test Steam Path Pressure/Flow Relationships	111
9.3	Calculation of Generator Load by Heat Balance Around the Turbine-Generator	137
9.4	Group 2 Correction Factors (Using Manufacturer's Correction Curves)	138
12.1	Correction Divisors for the Test Steam Conditions	158
13.1	Results of Baseline and Verification Tests	164

Copyright ASME International
Provided by IHS under license with ASME
No reproduction or networking permitted without license from IHS
Not for Resale

SECTION 1 — INTRODUCTION

(a) This Appendix has been prepared to facilitate the calculation and correction of turbine test results by furnishing numerical examples of the procedures outlined in *The Performance Test Code on Steam Turbines* (PTC 6-1996). The feedwater heating cycles and gland leakoff systems have been simplified by avoiding unnecessarily long or repetitive calculations while still demonstrating the basic principles involved. Section 3 of this Appendix gives general guidance for making these calculations and comparisons to specified performance.

(b) Throughout this publication, the assumptions regarding turbine performance and the numerical values of corrections are hypothetical and should not be considered applicable to any particular unit.

(c) Except with written agreements to the contrary, the latest edition of the ASME Steam Tables, *Thermodynamic and Transport Properties of Steam* and its enthalpy-entropy diagram (Mollier chart), shall be used in the calculation of test results. When computers are used, they may link to compiled versions of the source code as supplied with the steam tables. As of January 1999 a new set of steam properties formulations, referred to as IAPWS IF-1997, became the international standard for calculations in the power industry. The IF-1997 formulations now supersede the IFC-1967 formulations that were used for the preceding three decades.

Steam turbine performance tests based on heat balances utilizing the IFC-1967 formulations, no matter when conducted, must still use the IFC-1967 formulations.

The numerical examples in this document are based on the use of the IFC-1967 formulations, as they merely demonstrate a computational procedure. In actual tests, the users must decide on the formulations appropriate for their circumstances.

(d) It is ASME policy that "all works, papers, and periodicals published by the Society shall require units to be in the International System (SI)." In response to that policy, all results are shown in both units, and a calculation example of a complete expansion condensing turbine is provided in U.S. Customary units (Section 6) and SI units (Section 6a).

(e) Performance Test Code 6 on Steam Turbines (PTC 6-1996) is the basic reference for this Appendix and will be termed "the Code" in further references herein. Reference should also be made to the *ASME Performance Test Code Supplements on Instruments and Apparatus* (PTC 19 Series) for guidance in the selection, installation, and use of instrumentation.

(f) The numerical calculations shown in Sections 6 through 13 in this Appendix have been computed in sufficient detail to illustrate the technique involved. In many instances, intermediate steps that lead to the final answer have been included using assumed guidelines for roundoff and number of significant figures. The reader is cautioned that the use of different guidelines or computational procedures may result in slightly different values but should have negligible effect on the results of a test.

Copyright ASME International
Provided by IHS under license with ASME
No reproduction or networking permitted without license from IHS
Not for Resale

SECTION 2 — DEFINITIONS AND DESCRIPTION OF TERMS

The following symbols are to be used unless otherwise defined in the text. For additional definitions and terms see PTC 2.

2.1 SYMBOLS

Symbol	Definition	Units	
		U.S. Customary	SI
A	Area	$in.^2$	m^2
d	Primary element throat diameter	in.	m
D	Pipe internal diameter	in.	m
F	Force	lbf	N
g	Local value of acceleration due to gravity	ft/sec^2	m/s^2
g_o	Dimensional conversion constant = 32.174 05 $lbmft/lbfsec^2$ (9.80665 mkg/Ns^2). This is an internationally agreed upon value that is close to the mean acceleration due to gravity at 45 deg N latitude at sea level.	$lbmft/lbfsec^2$	mkg/Ns^2
h	Enthalpy	Btu/lbm	kJ/kg
J	Mechanical equivalent of heat (1 Btu = 778.17 ft lbf = 1/3,412.142 kWhr)	Btu	J
M	Moisture fraction, 1–(x/100)	ratio	ratio
m	Mass	lbm	kg
N	Rotational speed	rpm	rad/s
P	Power	kW or hp	kW
p	Pressure	psia	kPa
s	Specific entropy	Btu/lbm°R	kJ/(kgK)

Copyright ASME International
Provided by IHS under license with ASME
No reproduction or networking permitted without license from IHS
Not for Resale

Symbol	Definition	Units	
		U.S. Customary	SI
t	Temperature	°F	K °C [Note (1)]
T	Absolute temperature	°R	K
V	Velocity	ft/sec	m/s
v	Specific volume	ft^3/lbm	m^3/kg
w	Rate of flow	lbm/hr	kg/s
x	Quality of steam	percent	percent
β	Beta ratio, d/D	ratio	ratio
η	Efficiency	percent	percent
ρ	Density	lbm/ft^3	kg/m^3
γ	weight	lbf/ft^3	N/m^3

NOTE:
(1) These are tolerated non-SI units.

2.2 ABBREVIATIONS

Abbreviation	Term	Units	
		U.S. Customary	*SI*
HR	Heat rate	Btu/kWhr Btu/hp-hr	J/J kJ/kWh [Note (1)]
SR	Steam rate	lbm/kWhr lbm/hp-hr	kg/kJ kg/kWh [Note (1)]

NOTE:
(1) These are tolerated non-SI units.

Copyright ASME International
Provided by IHS under license with ASME
No reproduction or networking permitted without license from IHS
Not for Resale

2.3 SUBSCRIPTS

Abbreviation	Term
g	Generator
r	Rated condition
c	Corrected
s	Specified operating condition, if other than rated
t	Test operating condition
1	Condition measured at a point directly preceding the turbine stop valves and steam strainers, if furnished under the turbine contract
2	For turbines using superheated steam: condition at turbine outlet connection leading to the first reheater. For turbines using predominantly wet steam: condition at turbine outlet connection leading to external moisture separator.
3	For turbines using superheated steam: condition downstream of the first reheater, measured at a point directly preceding the reheat stop valves, intercept valves, or steam dump valves, whichever are first, if furnished under the turbine contract [Note (1)]. For turbines using predominantly wet steam: condition at external moisture separator outlet.
4	For turbines using superheated steam: condition at turbine outlet connection leading to the second reheater. For reheat turbines using predominantly wet steam: condition downstream of the reheater, measured at a point directly preceding the reheat stop valves, intercept valves, or steam dump valves, whichever are first, if furnished under the turbine contract [Note (1)].
5	For turbines using superheated steam and two stages of reheat: condition downstream of the second reheater, measured at a point directly preceding the reheat stop valves, intercept valves or steam dump valves, whichever are first, if furnished under the turbine contract [Note (1)].
6	Condition at turbine exhaust connection
7	Condition at condenser-condensate discharge
8	Condition at condensate pump discharge
9	Condition at feedwater pump or feedwater booster pump inlet
10	Condition at feedwater pump discharge
11	Condition at the discharge of the final feedwater heater
a1	Superheater desuperheating water
a2	First reheater desuperheating water
a3	Second reheater desuperheating water
c1	Condenser circulating water leakage
E	Extraction steam
e	Make-up water admitted to the condensate system
p1	Packing leak-off (shaft or valve stems)
i,ii,. . .n	Sequence

GENERAL NOTE: The subscripts in this section apply only to Fig. 2.1.

NOTE:

(1) It may be necessary to correct for pressure drop in piping between reheat or low pressure stop valves, intercept valves, steam dump valves, and turbine shell if such piping is not furnished under the turbine contract.

Copyright ASME International
Provided by IHS under license with ASME
No reproduction or networking permitted without license from IHS
Not for Resale

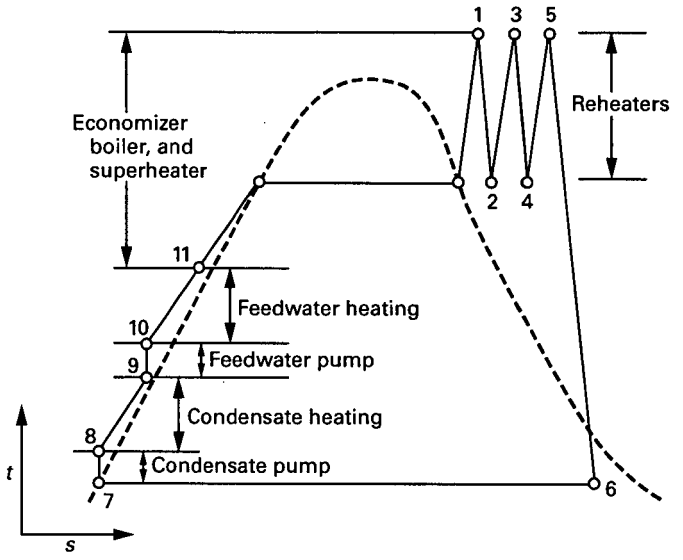

(a) Turbines Operating Predominantly in the Superheated Steam Region

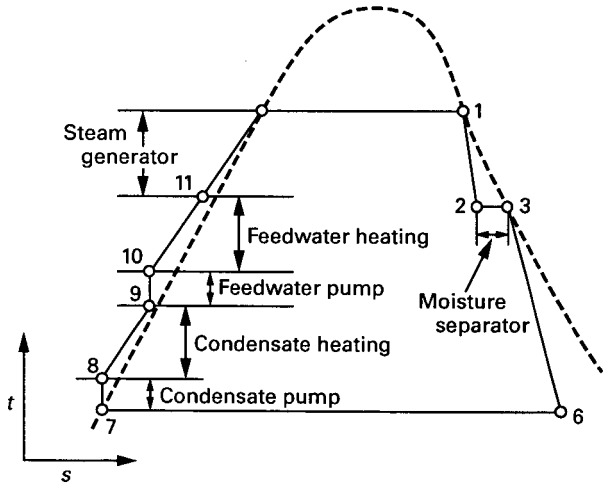

(b) Turbines Operating Predominantly in the Wet-Steam Region Without Reheat

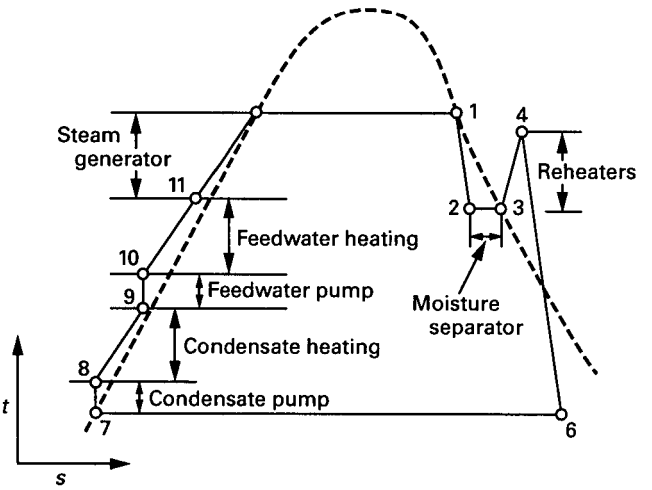

(c) Turbines Operating Predominantly in the Wet-Steam Region With Reheat

FIG. 2.1 TEMPERATURE-ENTROPY DIAGRAMS

Copyright ASME International
Provided by IHS under license with ASME
No reproduction or networking permitted without license from IHS
Not for Resale

2.4 DEFINITIONS

Term	Definition	Units	
		U.S. Customary	SI
Steam rate	Steam consumption per hour per unit output in which the turbine is charged with the steam quantity supplied.	lbm/kWhr lbm/hp-hr	kg/kJ kg/kWh [Note (1)] kg/kJ kg/kWh [Note (1)]
Heat rate	Heat consumption per hour per unit output. The turbine is charged with the aggregate enthalpy [Note (2)] of the steam supplied plus any chargeable aggregate enthalpy added by the reheaters. It is credited with the aggregate enthalpy of feedwater returned from the cycle to the steam generator. Turbine-generator performance may be defined on the basis of the gross power output at the generator terminals less the power used by the minimum electrically driven turbine auxiliaries and excitation equipment, supplied as part of the turbine-generator unit, required for reliable and continuous operation.	Btu/kWhr Btu/hp-hr	J/J kJ/kWh [Note (1)] J/J kJ/kWh [Note (1)]
Valve-loop curve	The continuous curve of actual heat rate for all values of output over the operating range of the unit.		
Mean of the valve loops	For partial admission turbines, a smooth curve which gives the same load-weighted average performance as the valve-loop curve.		
Valves wide open (VWO)	Maximum control valve opening obtainable under normal turbine control system operation.		
Valve points	Valve positions that correspond to the low points of the valve-loop curve.		
Locus curve	The continuous curve connecting the valve points.		
Power	The useful energy, per unit of time, delivered by the turbine or turbine-generator unit.	hp-hr/hr or kWhr/hr	kWh/hr

NOTES:
(1) These are tolerated non-SI units.
(2) Aggregate enthalpy: Product of enthalpy, Btu/lbm(kJ/kg) and flow rate, lbm/hr(kg/h); Btu/hr(kJ/h).

Copyright ASME International
Provided by IHS under license with ASME
No reproduction or networking permitted without license from IHS
Not for Resale

2.5 SI UNITS CONVERSION TABLE

Quantity	SI Units	Conversion Factor
Heat rate	J/J	$2.9307 \times 10^{-4} \times$ (Btu/kWhr)
	kJ/kWh [Note (1)]	$1.05506 \times$ (Btu/kWhr)
Steam rate	kg/kJ	$1.260 \times 10^{-4} \times$ (lbm/kWhr)
	kg/kWh [Note (1)]	$0.4536 \times$ (lbm/kWhr)
Mass flow rate	kg/s	$1.260 \times 10^{-4} \times$ (lbm/hr)
Pressure	kPa	$6.8948 \times$ (psi)
	bar [Note (1)]	$0.068948 \times$ (psi)
Temperature	K	(°F + 459.67)/l.8
	°C [Note (1)]	(°F − 32)/l.8
Differential temperature	K	°F/1.8
Density	kg/m^3	$16.018 \times$ (lbm/ft^3)
Enthalpy	kJ/kg	$2.3260 \times$ (Btu/lbm)
Entropy	kJ/(kgK)	$4.1868 \times$ (Btu/lbm°R)
Specific heat	kJ/(kgK)	$4.1868 \times$ (Btu/lbm°R)
Length	m	$0.3048 \times$ (ft)
Area	m^2	$0.092903 \times$ (ft^2)
Volume	m^3	$0.028317 \times$ (ft^3)
Velocity	m/s	$0.3048 \times$ (ft/sec)

GENERAL NOTE: For temperature differentials "K" must be used.
NOTE:
(1) This value is a tolerated non-SI unit.

Copyright ASME International
Provided by IHS under license with ASME
No reproduction or networking permitted without license from IHS
Not for Resale

SECTION 3 — GUIDANCE FOR A COMPARISON OF TEST RESULTS

3.1 INTRODUCTION

Section 5 of the Code contains a general description of the computation of test performance for the various types of turbines. It recognizes the necessity to correct test performance for the effect of deviations from specified operating conditions so the as-tested turbine performance can be compared to the design or specified turbine performance on the basis of equivalent cycle and steam conditions. Reference to this Appendix for numerical examples of the corrections involved is made in para. 5.1 of the Code.

The purpose of this Section is to provide a better understanding of the numerical examples by describing how the corrections to test results are made.

3.2 CORRECTION OF THE TEST RESULTS TO SPECIFIED CONDITIONS

This procedure corrects the test performance for the influence of off-design steam and cycle conditions so that the test turbine performance can be compared to the specified turbine performance on the basis of an equivalent cycle. The calculated test performance is recalculated, substituting specified steam and cycle conditions for test steam and cycle conditions while maintaining test turbine efficiency. The corrected test cycle is now comparable with the specified cycle. The specified performance remains unchanged, which is particularly appropriate when the specified performance is associated with a turbine performance guarantee.

Some of the steam and cycle conditions that are apt to differ from specified values during a test of a fossil-fueled unit, despite efforts to influence the controllable ones, are as follows:

(a) Controllable Items

(1) Pressure of steam supplied to the turbine

(2) Temperature of steam supplied to the turbine

(3) Temperature of reheated steam returned to the turbine

(4) Low pressure turbine exhaust pressure (uncontrollable if higher than the specified value)

(5) Make-up feedwater flow rate

(b) Uncontrollable Items

(1) Pressure drop of steam through the reheater system(s)

(2) Reheater desuperheating water flow rates

(3) Superheater desuperheating water flow rate, of no concern if taken downstream from the top heater

(4) Steam flow rate for some auxiliary uses

(5) Extraction line pressure drops and heat losses

(6) Feedwater heater terminal temperature differences

(7) Feedwater heater drain-cooler-approach differences

(8) Feedwater enthalpy rise through condensate and feedwater pumps

(9) Cycle losses (usually assumed to be zero in design)

(10) Additional uncontrollable items for units operating predominantly in the moisture region are

(a) Moisture content (percent) of the steam supplied to the turbine

(b) Temperature of the reheated steam returned to the turbine

Each of these items has some degree of influence on measured turbine performance, making the use of appropriate corrections necessary.

It should be noted that the reheat temperature of a light-water-moderated reactor unit influences the position of the low pressure turbine expansion line and, therefore, the amount of moisture existing in the blade path. A correction for deviation from specified reheat temperature is appropriate only to the extent that the test reheat temperature has been affected by differences from specified values of pressure drop in the heating steam supply line to the final stage reheater, assuming that the reheater has been supplied as a part of the turbine-generator contract. An appropriate correction for the effect of pressure drop differences can be made when drawing the expansion line for the heat balance used to determine the Group I corrections. This correction is applied by changing the test efficiency of each separate expansion (between extraction points) by

Copyright ASME International
Provided by IHS under license with ASME
No reproduction or networking permitted without license from IHS
Not for Resale

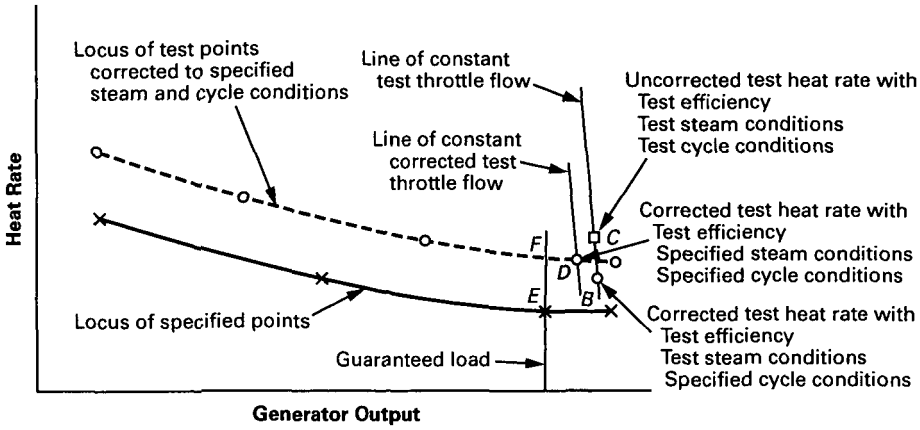

FIG. 3.1 CYCLE CORRECTIONS

1% for each 1% change in average moisture in that expansion. The change referred to results from the difference between the specified and test values of pressure drop. To make use of this correction, it is necessary to calculate and draw the individual group expansion lines using test data and then calculate and draw the new expansion lines for the specified heat balances, starting at the revised low pressure inlet state point corresponding to the specified value of pressure drop in the heating steam supply line. The assumption is made that the shift in the position of the expansion lines is small enough to cause an imperceptible change in water removal at the extraction points.

After application of these corrections, the test performance is free from all influence of steam and cycle conditions and therefore differs from the specified performance only in the level of turbine efficiency. If the main purpose in conducting the tests were to determine the difference between test and specified turbine efficiency (perhaps expressed as heat rate or steam rate), a procedure that properly takes into account the factors just described would provide a means of achieving the purpose.

The calculation method used in Section 8 (reheat-regenerative unit) illustrates the conventional method of making the cycle correction heat balance, based on the test heat balance for a fossil-fired unit. In succession, heat rate C, B, and D are obtained as illustrated in Fig. 3.1. Heat rate C is the test heat rate at test steam and cycle conditions. Heat rate B is heat rate C corrected to specified cycle conditions (Group 1 corrections). Heat rate D is heat rate B further corrected to specified steam conditions (Group 2 corrections). Heat rate D for a series of test runs conducted at valve points over the load range forms a locus line that can be compared directly to the locus of expected points as described in the next paragraph.

It is not essential that heat rate D be obtained in the C, B, D sequence shown. It is also possible that one would like to apply the Group 2 correction to heat rate C, omitting the calculation of the Group 1 correction. When doing this for a series of points, it is important to remember that differences in cycle conditions will make them less than completely comparable with each other and, of course, will make them unsuitable for comparing with a guarantee.

As stated in para. 3.13.2 of the Code, when the specified performance is based on valve points, two locus lines should be drawn, one through the corrected test points and the other through the specified points. The test results may then be compared by reading the differences between the two locus curves at the specified kilowatt load, as illustrated by points E and F in Fig. 3.1.

The following guidance relates to the test of a light-water-moderated reactor unit when the turbine has a single valve or multiple valves operating in unison and the electrical output guarantee is made at a given reactor heat output. It is highly unlikely that a good faith effort would result in the test being run at exactly the specified reactor output. If the reactor output during the test is somewhat smaller (by less than 1%), it is permissible to ratio the electrical load up in proportion to the shortage in reactor power if it is verified that the turbine inlet valves are capable of sufficient further opening to pass the required amount of additional steam.

Copyright ASME International
Provided by IHS under license with ASME
No reproduction or networking permitted without license from IHS
Not for Resale

SECTION 4 — FLOW MEASUREMENT BY THE ENTHALPY-DROP METHOD

4.1 OVERVIEW

This method of determining throttle steam flow is applicable only to non-condensing or back-pressure turbines having a flow at rated output of not less than 50,000 lbm/hr and with other operating conditions as stated in para. 4.15.1 of the Code. The enthalpy drop method determines the throttle steam flow from a heat balance around the turbine-generator unit by equating the heat entering the system in the throttle steam to the heat leaving the system in extractions, exhaust, and leak-off steam flows, generator output, and electrical, thermal, and mechanical losses.

The unit tested was a 6,500-kW, single-cylinder, non-condensing, non-extracting turbine. Fig. 4.1 indicates the high pressure leakoff from the No. 1 gland discharged into the turbine exhaust line. The low pressure leakoff from the No. 1 gland and the single leakoff from the No. 2 gland were disposed of external to the turbine.

4.2 DESCRIPTION OF TEST INSTRUMENTATION

(a) Steam temperatures were measured with calibrated chromel-constantan thermocouples with continuous thermocouple wires and integral cold junctions. Thermocouple outputs were read with a precision 0.03% accuracy class digital voltmeter.

(b) Gage pressures were measured with 0.10% uncertainty instruments, and absolute pressure transducers were calibrated in-place before and after the test.

(c) Gland leakoff flows were measured with orifice flow sections, and 0.10% uncertainty differential pressure transducers were calibrated in-place before and after the test.

(d) Generator output was measured with one three-element polyphase watthour meter with high-accuracy digital readout and separate test instrument transformers.

(e) Barometric pressure was measured with a precision aneroid barometer.

4.3 SUMMARY OF TEST DATA

Data recorded during the test were averaged and corrected for instrument calibrations, water legs, zero corrections, barometric pressures, and ambient temperatures. Pressure and temperature measurements, corrected for instrument calibrations, and steam enthalpies derived from these data using the 1967 ASME Steam Tables, are shown in Fig. 4.1. Gland leakoff flows, calculated from differential pressure measurements, are also shown.

4.4 TURBINE LOSSES

The following calculated mechanical losses of the turbine were agreed on:

Bearing friction	39 kW
Windage of external rotating parts	12 kW
Power to operate shaft-driven lubricating oil pumps, speed regulating mechanisms, etc.	32.5 kW
Heat loss by radiation, conduction, and convection	6.5 kW
Total mechanical losses of turbine	90 kW

The bearing, windage, and electrical losses of the generator were obtained from the generator loss curve supplied as part of the Turbine Performance Data and were determined to be 195 kW.

4.5 CALCULATION OF THROTTLE FLOW

Throttle steam flow was calculated from a heat balance around the turbine-generator unit.

w = throttle steam flow, lbm/hr

where

Exhaust flow at point of temperature measurement = throttle flow − No. 1 gland leakoff flow (lp) − No. 2 gland leakoff flow

$$= w - 671 - 627$$
$$= w - 1{,}298 \text{ lbm/hr}$$

Heat In = Heat Out

Copyright ASME International
Provided by IHS under license with ASME
No reproduction or networking permitted without license from IHS
Not for Resale

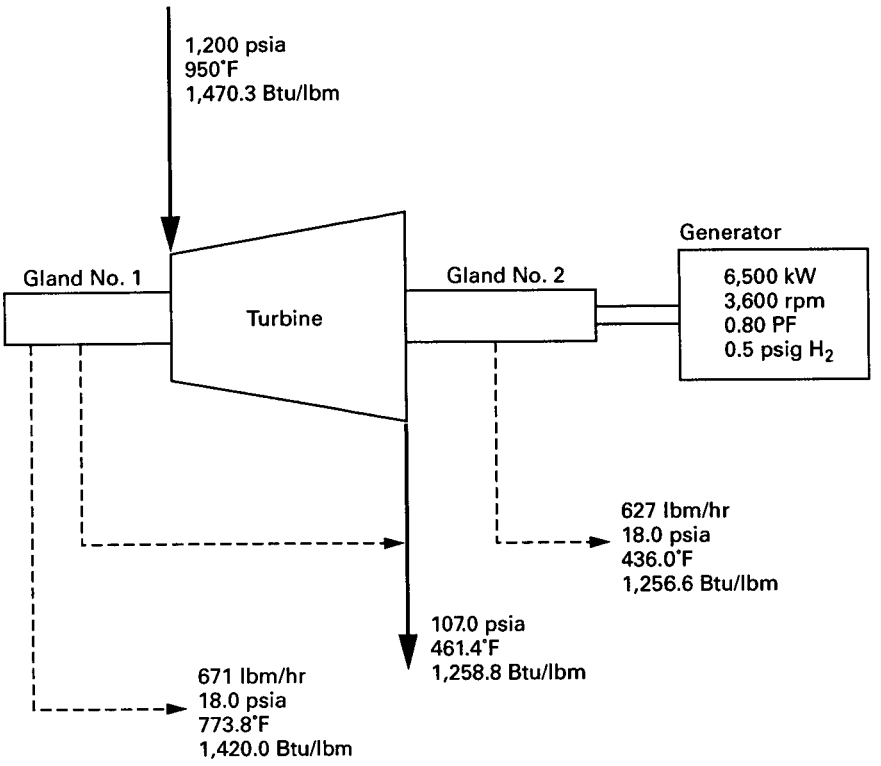

FIG. 4.1 HIGH PRESSURE LEAKOFF FROM THE NO. 1 GLAND DISCHARGED INTO THE TURBINE EXHAUST LINE

TABLE 4.1
CALCULATION OF THROTTLE FLOW

	Flow, lbm/hr		Enthalpy, Btu/lbm		Heat Flow, Btu/hr
Heat In					
Throttle steam	w	×	1,470.3	=	1,470.3 (w)
Heat Out					
No. 1 gland (lp) leakoff	671	×	1,420.0	=	952,820
No. 2 gland leakoff	627	×	1,256.6	=	787,888
Exhaust steam	(w – 1,298)	×	1,258.8	=	1,258.8 (w – 1,298)
Heat equivalent of:					
Generator output	6,500 kW × 3,412.14 Btu/kWhr			=	22,178,910 Btu/hr
Mechanical losses	90 kW × 3,412.14 Btu/kWhr			=	307,093 Btu/hr
Generator losses	195 kW × 3,412.14 Btu/kWhr			=	665,367 Btu/hr

Total heat leaving = 1,258.8 (w – 1,298) + 24,892,078 Btu/hr

Heat Balance

Equating heat in and heat out

$$1{,}470.3\ (w) = 1{,}258.8\ (w - 1{,}298) + 24{,}892{,}078$$
$$211.5\ (w) = 23{,}258.156$$

The throttle flow w = 109,968 lbm/hr (13.8560 kg/s)

Copyright ASME International
Provided by IHS under license with ASME
No reproduction or networking permitted without license from IHS
Not for Resale

SECTION 5 — SAMPLE CALCULATION FOR THE REYNOLDS NUMBER EXTRAPOLATION OF A CALIBRATED ASME TEST FLOW SECTION

5.1 GENERAL

An ASME test flow section containing a low β-ratio nozzle, conforming to the requirements of PTC 6-1996, was calibrated to a maximum operating Reynolds number of 6.7E+6. The measuring device is used to determine condensate flow in a nuclear power plant. The expected operating Reynolds number at rated load is 18.2E+6.

The following example shows the test data for a 20-point calibration. It gives the procedure used to determine whether the flow-measuring device satisfies the criteria specified in paras. 4.8.15.1 through 4.8.15.3 of PTC 6-1996. It presents also the computations necessary to obtain the coefficient of discharge for a specified Reynolds number requiring extrapolation from the calibration data.

5.2 NOMENCLATURE

a = ordinate intercept of the regression line
b = slope of the unconstrained regression line of C_x
b_{min} = minimum value of slope b at 95% confidence
b_{max} = maximum value of slope b at 95% confidence
C = measured discharge coefficient during calibration
C_e = extrapolated discharge coefficient at a specified Reynolds number, Rd_s
C_x = coefficient calculated from equation in PTC 6 para. 4.8.15
C_{xavg} = average of all C_x values
C_{xr} = coefficient calculated from linear regression of the C_x values
n = number of calibration points
Rd = Reynolds number
Rd_{avg} = average of all calibration Reynolds numbers
Rd_s = specified Reynolds number for extrapolation
$S_{Cx,Rd}$ = standard error of the linear regression of the C_x values
$s(b)$ = standard deviation of the slope b
t = Student's t factor
$_i$ = counter, which assumes values from 1 to n

5.3 CALIBRATION EXAMPLE DATA

The example calibration data is shown in Table 5.1 and graphically represented in Fig. 5.1.

5.4 EVALUATION OF CALIBRATION DATA

5.4.1 Check for Conformance With C_{xavg} Criterion (Para. 4.8.15.1 of the Code). To obtain the individual values C_{xi}, the equation in para. 4.8.15 of the Code is used:

$$C_{xi} = C_i + 0.185\ Rd^{-0.2}\left(\frac{1 - 361{,}239}{Rd}\right)^{0.8}$$

For the example,

$$C_{x11} = 0.9978 + 0.185 * (4.868E+6)^{-0.2} * \left(\frac{1 - 361{,}239}{4.868E+6}\right)^{0.8} = 1.0058$$

As shown in Table 5.1, C_{xavg}, the average of all the C_{xi} values is 1.0060.

$$1.0029 \le 1.0060 \le 1.0079$$

Therefore, the C_{xavg} criterion is satisfied.

5.4.2 Check for Conformance With Reynolds Number Independence Criterion (Para. 4.8.15.2 of the Code). The unconstrained linear regression equation,

$$C_x = a + b\ Rd,$$

is determined as follows:

Copyright ASME International
Provided by IHS under license with ASME
No reproduction or networking permitted without license from IHS
Not for Resale

TABLE 5.1
CALIBRATION EXAMPLE DATA

Point No.	Calibration Reynolds Number, Rd_i	Calibration Discharge Coefficient, C_i	Calculated	
			C_{xi}	C_{xri}
1	3,091,000	0.9980	1.0064	1.00620
2	3,276,000	0.9986	1.0070	1.00618
3	3,413,000	0.9984	1.0068	1.00616
4	3,630,000	0.9976	1.0059	1.00613
5	3,798,000	0.9977	1.0060	1.00610
6	3,945,000	0.9977	1.0059	1.00608
7	4,086,000	0.9975	1.0057	1.00606
8	4,259,000	0.9971	1.0052	1.00604
9	4,456,000	0.9974	1.0055	1.00601
10	4,678,000	0.9979	1.0059	1.00598
11	4,868,000	0.9978	1.0058	1.00596
12	5,071,000	0.9977	1.0057	1.00593
13	5,277,000	0.9975	1.0054	1.00590
14	5,487,000	0.9978	1.0057	1.00587
15	5,712,000	0.9988	1.0066	1.00584
16	5,922,000	0.9990	1.0068	1.00581
17	6,119,000	0.9991	1.0068	1.00578
18	6,328,000	0.9978	1.0055	1.00576
19	6,488,000	0.9979	1.0056	1.00573
20	6,681,000	0.9975	1.0051	1.00571
Average:	4,829,250	...	1.0060	...

The slope of the unconstrained regression line, b, is defined as:

$$b = \frac{\sum(Rd_i - Rd_{avg})(C_{xi} - C_{xavg})}{\sum(Rd_i - Rd_{avg})^2}$$

For the example,

$$\sum(Rd_i - Rd_{avg})(C_{xi} - C_{xavg}) = -3{,}381.7411$$

and

$$\sum(Rd_i - Rd_{avg})^2 = 2.4520\text{E}{+13}$$

Therefore,

$$b = -3{,}381.7411/2.4520\text{E}{+13} = -1.3792\text{E}{-10}$$

The intercept of the unconstrained regression line, a, is defined as

$$a = C_{xavg} - b\,Rd_{avg}$$

For the example,

$$a = 1.0060 + 1.3792\text{E}{-10} * 4.829\text{E}{+6} = 1.0066$$

For 20 calibration points, the standard error (sometimes referred to as the standard error of the y estimate) with respect to the unconstrained regression line, $S_{Cx,Rd}$, is

$$S_{Cx,Rd} = \sqrt{\frac{\sum(C_{xi} - C_{xri})^2}{(n-2)}}$$

$$= \pm 5.6210\text{E}{-4}$$

where $C_{xri} = a + b\,Rd_i$

(e.g., for $Rd_i = 3{,}798{,}000$, $C_{xri} = 1.0066 - 1.3792\text{E}{-10} * 3{,}798{,}000 = 1.0061$) and

$$\sum(C_{xi} - C_{xri})^2 = 5.6872\text{E}{-6}$$

(e.g., for $Rd_i = 3{,}798{,}000$, $C_{xi} - C_{xri} = 1.0060 - 1.0061 = -0.0001$) and $n = 20$

Copyright ASME International
Provided by IHS under license with ASME
No reproduction or networking permitted without license from IHS
Not for Resale

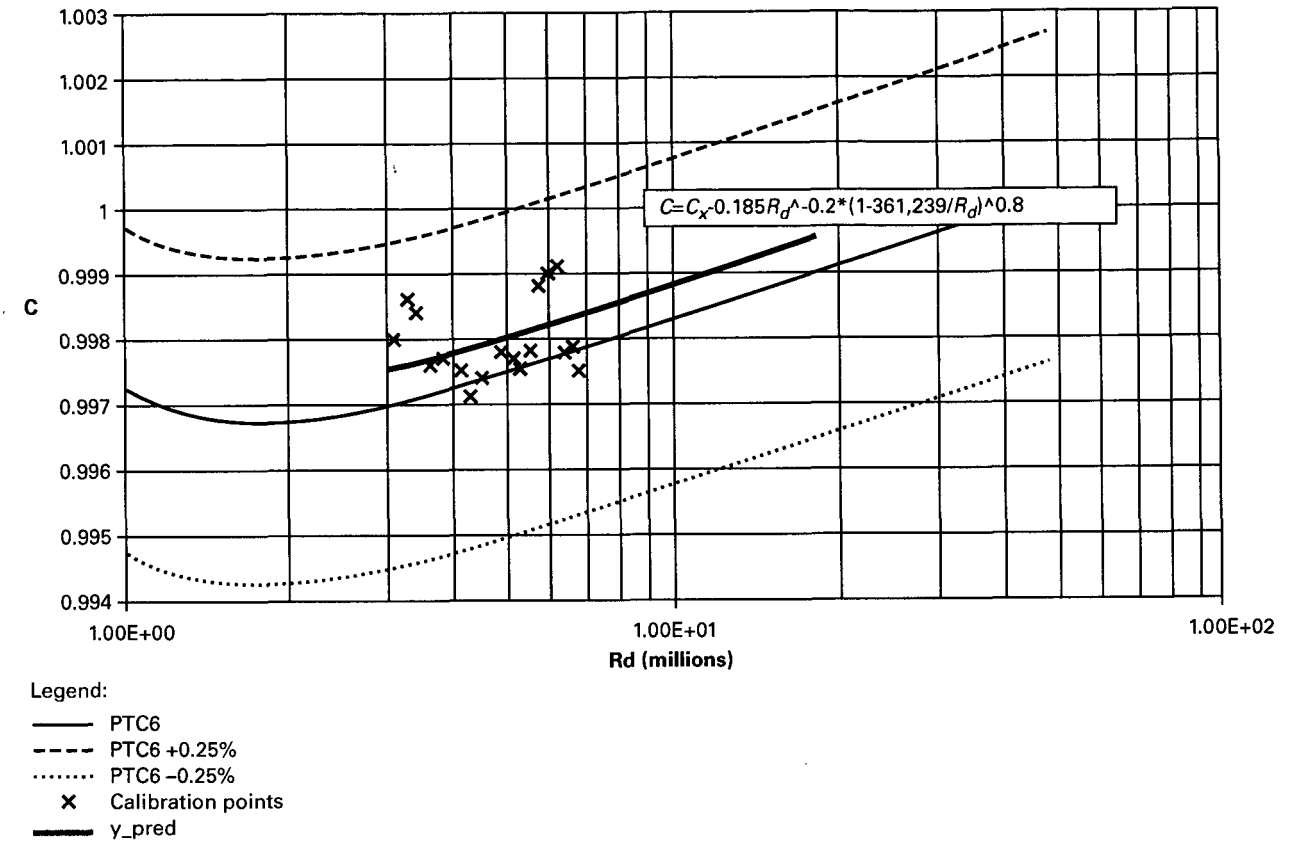

FIG. 5.1 EXTRAPOLATION OF CALIBRATION DATA USING PTC 6-1996 PROCEDURES

The confidence limits of the slope of the regression line at 95% coverage are given by

$$b \pm t\, s(b)$$

where $s(b)$ is the standard deviation of the slope determined from the equation

$$s(b) = \frac{S_{Cx,Rd}}{\sqrt{\sum (Rd_i - Rd_{avg})^2}} = \frac{5.6210\text{E-}4}{\sqrt{2.4520\text{E+}13}} = \pm 1.1352\text{E-}10$$

The Student's t factor for 18 (20 − 2) degrees of freedom = 2.1010

The confidence interval of the slope is, therefore

$$\pm 2.1010 * 1.1352\text{E}{-10} = \pm 2.3849\text{E}{-10}$$

Thus, the minimum slope of the regression line is

$$b_{min} = -1.3792\text{E}{-10} - 2.3849\text{E}{-10} = -3.7641\text{E}{-10}$$

and the maximum slope of the regression line is

$$b_{max} = -1.3792\text{E}{-10} + 2.3849\text{E}{-10} = +1.0057\text{E}{-10}$$

As these two slopes straddle zero, the Reynolds number independence criterion is satisfied.

5.4.3 Check for Conformance With Calibration Data Scatter Criterion (Para. 4.8.15.3 of the Code). The confidence interval of the C_x data for 95%

Copyright ASME International
Provided by IHS under license with ASME
No reproduction or networking permitted without license from IHS
Not for Resale

confidence level, with respect to the regression line, is calculated from the expression:

$$\text{confidence interval} = \frac{t\, S_{Cx,Rd}}{\sqrt{n}}$$

$$= \frac{\pm\ 2.1010 * 5.6210\text{E}{-4}}{\sqrt{20}}$$

$$= \pm 0.00026$$

and

$$0.00026 < 0.0003$$

The calibration scatter criterion is, therefore, satisfied.

5.5 CALCULATED DISCHARGE COEFFICIENT EXTRAPOLATED TO THE SPECIFIED REYNOLDS NUMBER

For a specified Reynolds number (Rd_s) the extrapolated discharge coefficient (C_e) is calculated from the equation given in para. 4.8.15 of the Code:

$$C_e = Cx_{avg} - 0.185\ Rd_s^{-0.2} \left(\frac{1 - 361{,}239}{Rd_s}\right)^{0.8}$$

For the example, and at a specified Reynolds number of 18.2E+6,

$$C_e = 1.0060 - 0.185 * (18.2\text{E}{+6})^{-0.2} * \left(\frac{1 - 361{,}239}{18.2\text{E}{+6}}\right)^{0.8}$$

$$= 0.9995$$

See Fig. 5.1.

5.6 ALTERNATIVE REYNOLDS NUMBER INDEPENDENCE CRITERION (ALTERNATIVE TO PARA. 4.8.15.2 OF THE CODE)

In some instances the application of the Reynolds number independence criterion of para. 4.8.15.2 can lead to rejection of otherwise acceptable flow sections. This is especially true for calibrations with low data scatter. To accommodate these special cases and to simplify the requirement set forth in para. 4.8.15.2, the following criterion may be used: If the slope of the unconstrained fit, b, is within ±2.7E−10, the values of C_x may be considered Rd independent (or have an acceptable degree of Rd dependence). This is predicated on conformance to the requirements of para. 4.8.13 of the Code.

For the example, the slope of the unconstrained fit, as para. 5.4.2, is

$$b = -1.3792\text{E}{-10}$$

The standard error of the regression line C_x is

$$S_{Cx,Rd} = \pm 5.6210\text{E}{-4}$$

The confidence limits of the slope of the regression line at 95% coverage are given by

$$b \pm t\, s(b)$$

where $s(b)$ is the standard deviation of the slope determined from the equation:

$$s(b) = \frac{S_{Cx,Rd}}{\sqrt{\Sigma (Rd_i - Rd_{avg})^2}}$$

$$= \frac{5.6210\text{E}{-4}}{\sqrt{2.4520\text{E}{+13}}}$$

$$= \pm 1.1352\text{E}{-10}$$

Since the Student's t factor for (20 − 2) degrees of freedom = 2.1010, the confidence interval of the slope is

$$\pm 2.1010 * 1.1352\text{E}{-10} = \pm 2.3849\text{E}{-10}$$

and, thus, the confidence limits for b are

$$b_{max} = -1.3792\text{E}{-10} + 2.3849\text{E}{-10}$$
$$= 1.0057\text{E}{-10}$$

and

$$b_{min} = -1.3792\text{E}{-10} - 2.3849\text{E}{-10}$$
$$= -3.7641\text{E}{-10}$$

In the example, the Reynolds number independence criterion in para. 4.8.15.2 of the Code was met. Otherwise, the value of $b = \pm 2.7\text{E}{-10}$ would have been limiting.

The limiting value of $b = \pm 2.7\text{E}{-10}$ was calculated to minimize the uncertainty of the extrapolated discharge coefficient. This limiting value was determined according to the following model:

Copyright ASME International
Provided by IHS under license with ASME
No reproduction or networking permitted without license from IHS
Not for Resale

Based on the 0.1% repeatability requirement of PTC 6 para. 4.8.13, the permissible deviation between any calibration point and the unconstrained regression line is

$$\frac{0.1\%}{2} = 0.05\%$$

For 20 calibration points, the standard deviation with respect to the unconstrained regression line, $S_{Cx,Rd}$, is

$$S_{Cx,Rd} = \sqrt{\frac{20 * 0.00052}{20 - 2}} = \pm 5.27E{-}4$$

Note that in the equation for $S_{Cx,Rd}$, applied for this model, $\Sigma(C_{xi} - C_{xri})^2 = 20 * 0.00052$ if all $(C_{xi} - C_{xri}) = 0.05\%$ and $n = 20$.

For 20 calibration points, evenly distributed between Rd = 1E+6 and 4E+6,

$$[\Sigma(Rd_i - Rd_{avg})^2]^{0.5} = \pm 4{,}071{,}724$$

The Student's t factor for 18 degrees of freedom = 2.1010

Therefore, the confidence limit of the slope is

$$\frac{t\, S_{Cx,Rd}}{\sqrt{\Sigma(Rd_i - Rd_{avg})^2}}$$

$$= \frac{\pm 2.1010 * 5.27E{-}4}{4{,}071{,}724}$$

$$= \pm 2.72E{-}10$$

Copyright ASME International
Provided by IHS under license with ASME
No reproduction or networking permitted without license from IHS
Not for Resale

SECTION 6 — SAMPLE CALCULATIONS FOR A TEST OF A COMPLETE EXPANSION CONDENSING TURBINE USING U.S. CUSTOMARY UNITS[1]

6.1 DESCRIPTION OF UNIT

The unit tested was a 3600-rpm condensing turbine with six control valves used in a gas turbine/steam turbine combined cycle power plant utilizing a single-pressure HRSG. There are no provisions for steam extraction out of the turbine stages, and throttle steam is provided by four unfired heat recovery steam generators supplied with the exhaust gas heat from four gas turbines. The turbine rated capability is 112,000 kW with throttle steam conditions of 800 psig, 850°F, 3.5 in. Hg absolute exhaust pressure, and 0% cycle make-up. The generator is rated at 133,000 kVA, 0.85 power factor, and 30 psig hydrogen pressure. The shaft and valve stem seals are supplied with steam controlled by an automatic steam seal regulator. An evacuator prevents steam from blowing out of the shaft end seals to atmosphere, and a gland seal condenser recovers the heat from this steam in the main condensate. The condensed gland seal steam is directed to the condenser and is included in the condensate flow nozzle flow. Leakoff steam from the inner high-pressure turbine seal chamber, lower valve stem leakoffs, and the steam seal regulator excess steam dump return to lower stages in the turbine. The specified steam rate of 8.16 lbm/kWhr at the rated operating conditions and at 112,000 kW output is on a locus-of-valve-points steam rate basis as shown in Fig. 6.1.

6.2 DESCRIPTION OF TEST INSTRUMENTATION

Location of instrumentation is shown on the instrumentation and flow diagram, Fig. 6.2. Throttle steam pressure and temperature were measured with deadweight gages and calibrated thermocouples. The exhaust pressure was measured with absolute pressure gages sensing the turbine exhaust pressure at eight basket tip sensors located at the two turbine side-exhaust flanges. Generator output was determined by three-wattmeter method. Steam flow to the turbine was established by measuring the condensate out of the condenser using a throat-tap flow nozzle and adjusting this flow for the amount of gland leakage from the hotwell pump and storage change in the condenser hotwell. The condenser was checked for leakage and found to be tight.

6.3 SUMMARY OF THE TEST DATA ON NUMBER 5 VALVE POINT

All readings have been corrected for instrument calibration.

Throttle steam pressure	813.7 psia
Throttle steam temperature	851.6 °F
Exhaust pressure	3.38 in. Hga
Condensate flow	892,766 lbm/hr
Generator output	110,131 kW
Generator hydrogen pressure	28.8 psig
Generator power factor	0.892
Decrease in condenser hotwell storage (level drop)	126 lbm/hr
Hotwell pump gland leakage	50 lbm/hr

6.4 DETERMINATION OF TURBINE THROTTLE FLOW

The throttle steam flow to the turbine was established from the condensate nozzle flow with correction to account for the effect of losses or gains between the point of measurement and the turbine throttle. Though not conforming to the provisions of para. 4.8 in PTC 6, it may be preferable to use an orifice metering section to measure condensate flow for this application, where the device is used for testing at a Reynolds number within the calibration range; i.e., no extrapolation of the coefficient

[1] This sample calculation is for a test of a complete expansion condensing turbine using U.S. Customary Units. For a sample calculation of the same turbine using SI Units, see Section 6A.

Copyright ASME International
Provided by IHS under license with ASME
No reproduction or networking permitted without license from IHS
Not for Resale

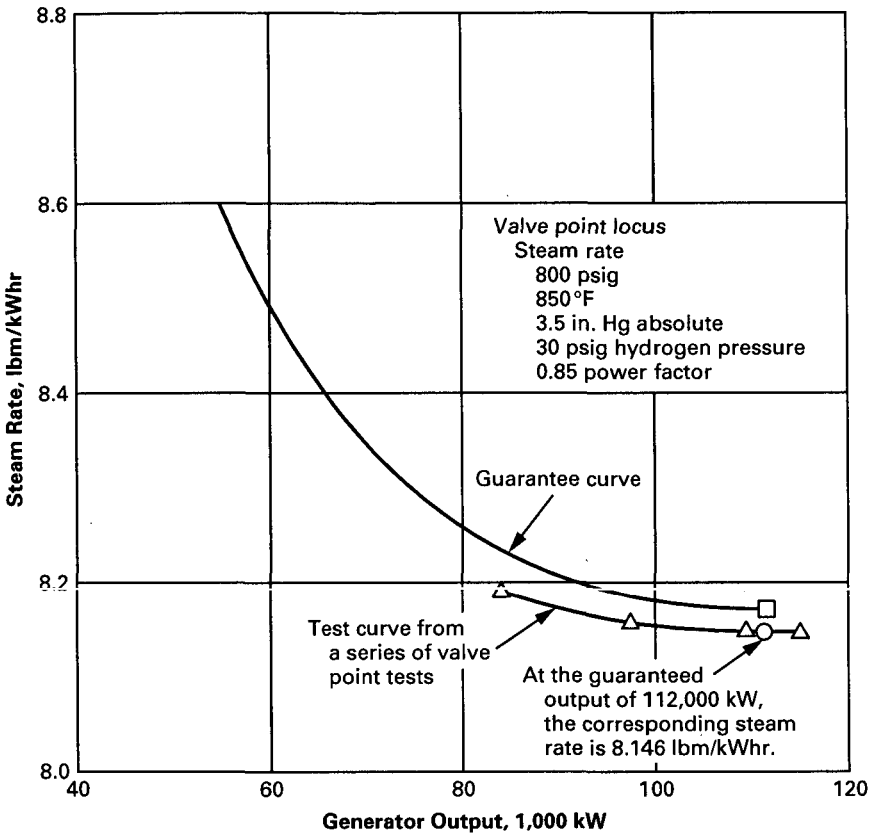

FIG. 6.1 SPECIFIED PERFORMANCE

Copyright ASME International
Provided by IHS under license with ASME
No reproduction or networking permitted without license from IHS
Not for Resale

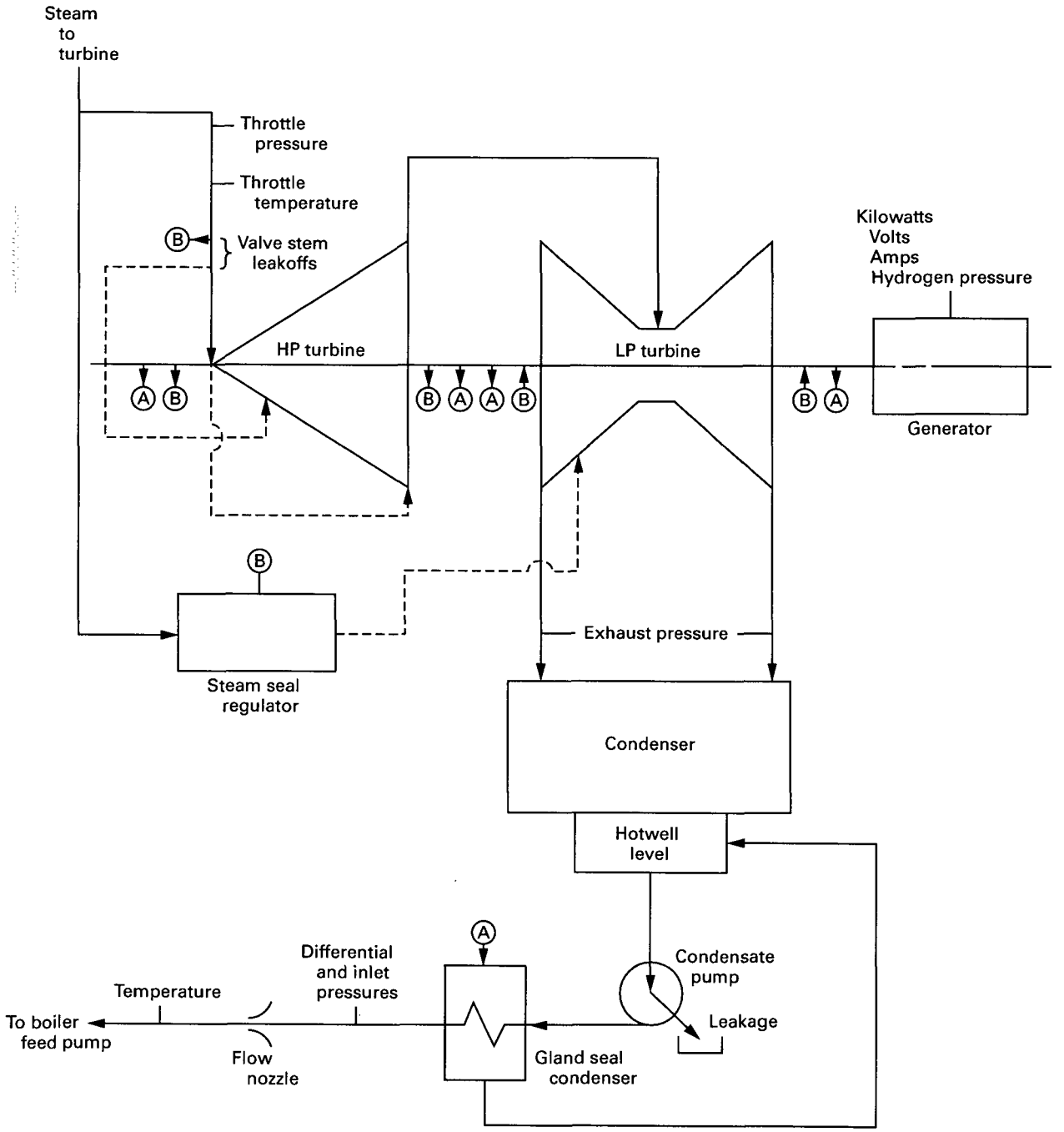

FIG. 6.2 INSTRUMENTATION AND FLOW DIAGRAM: COMPLETE EXPANSION CONDENSING TURBINE

Copyright ASME International
Provided by IHS under license with ASME
No reproduction or networking permitted without license from IHS
Not for Resale

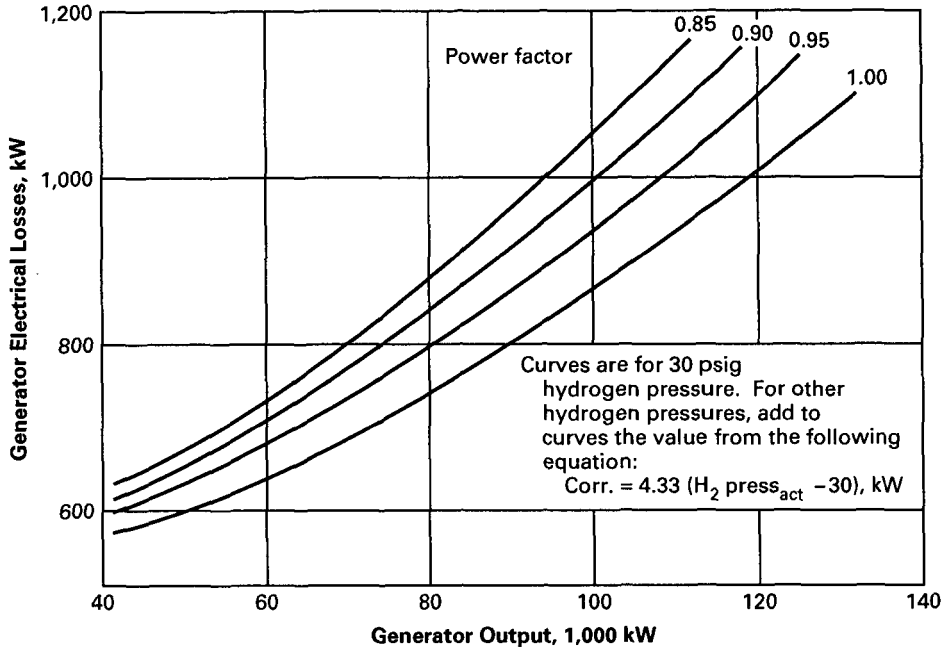

FIG. 6.3 GENERATOR ELECTRICAL LOSSES

of discharge is required. Based on the values given in PTC 6R, in all likelihood the use of this device increases the uncertainty of the test result.

For an uncertainty equivalent to that of a throat-tap nozzle flow section, the orifice flow section requires great care in planning during the plant design phase, manufacturing of the orifice and section, laboratory calibration and installation of the section, similar to such care required for a throat-tap nozzle section. In this plant, as in many, the plant orifice flow sections did not meet the stringent requirements of Code flow sections (see PTC 19.5), nor was the spool piece long enough to accommodate a temporary orifice metering section. A throat-tap nozzle assembly was needed.

Flow measured by the flow nozzle	892,766 lbm/hr
Decrease in hotwell storage	−126 lbm/hr
Hotwell pump gland leakage	+50 lbm/hr
Throttle steam flow during test	892,690 lbm/hr

6.5 CALCULATION OF GENERATOR OUTPUT CORRECTED TO SPECIFIED CONDITIONS

The test generator output was corrected for deviations from the specified values of power factor and hydrogen pressure, using the generator loss curve (Fig. 6.3) supplied with the turbine performance data.

Measured generator output	110,131 kW
Losses for 0.892 power factor and 30 psig absolute hydrogen pressure	1,093 kW
Correction for the test hydrogen pressure being 28.8 psig absolute rather than the specified 30 psig	−5 kW
Total generator losses, test conditions	1,088 kW
Losses with specified conditions of 0.85 power factor and 30 psig absolute hydrogen pressure	1,147 kW

Generator output corrected to specified operating conditions
110,131 + (1,088 − 1,147) = 110,072 kW

6.6 TEST STEAM RATE

The test steam rate with specified generator hydrogen pressure and power factor was calculated by dividing the test value of turbine throttle flow by the corrected output.

$$\text{Test steam rate} = \frac{892{,}690}{110{,}072} = 8.110 \text{ lbm/kWhr}$$

Copyright ASME International
Provided by IHS under license with ASME
No reproduction or networking permitted without license from IHS
Not for Resale

TABLE 6.1
STEAM RATE CORRECTIONS

	Test	Percent Change in Steam Rate	Correction Divisor
Throttle pressure	799.0 psig (Fig. 6.5)	+0.00	1.0000
Throttle temperature	851.6°F (Fig. 6.4)	−0.14	0.9986
Exhaust pressure	3.38 in. Hga (Fig. 6.6)	−0.30	0.9970
Combined correction divisor (product of correction divisors)			0.9956

6.7 THROTTLE FLOW CORRECTED TO SPECIFIED CONDITIONS

The test steam rate was next corrected for deviations from the specified throttle steam and exhaust conditions. The first step was to determine what the throttle steam flow would have been, if the specified conditions existed. The corrected throttle steam flow is

$$w_s = w_t \sqrt{\frac{p_s}{p_t} \times \frac{v_t}{v_s}}$$

where

w = steam flow rate, lbm/hr
p = pressure, psia
v = specific volume, ft³/lbm
$_s$ = specified condition
$_t$ = test conditions

Flow correction factor =

$$\sqrt{\frac{814.7}{813.7} \times \frac{0.9056}{0.9031}} = 1.0020$$

Corrected throttle flow = 1.0020 × 892,690 = 894,475 lbm/hr

6.8 STEAM RATE AND GENERATOR OUTPUT CORRECTED TO SPECIFIED CONDITIONS

Steam rate correction divisors were determined from the correction curves supplied with the turbine performance data (Figs. 6.4, 6.5, and 6.6). The corrected value of the throttle steam flow was used in determining corrections that vary as a function of the steam flow. No correction for the effect of speed was required because the turbine was operated at rated speed on a 60-Hz power system. Steam rate corrections are presented in Table 6.1.

Steam rate corrected to specified operating conditions =

$$\frac{\text{Test steam rate}}{\text{Correction divisor}}$$

$$= \frac{8.110}{0.9956}$$

$$= 8.146 \text{ lbm/kWhr}$$

Generator output corrected to specified operating conditions =

$$\frac{\text{Corrected throttle steam flow}}{\text{Corrected steam rate}}$$

$$= \frac{894{,}475}{8.145}$$

$$= 109{,}807 \text{ kW}$$

6.9 CONCLUSION

Figure 6.1 shows the steam rate plotted versus output. The guarantee curve is provided by the manufacturer. The test curve is drawn from a series of valve point tests with the steam rate and generator output, corrected to specified operating conditions, calculated in accordance with paras. 6.3 through 6.8. At the guaranteed output of 112,000 kW, the corresponding test steam rate is determined from the test curve to be 8.146 lbm/kWhr. Therefore, the test steam rate is 0.014 lbm/kWhr, or 0.2%, better than guarantee.

Copyright ASME International
Provided by IHS under license with ASME
No reproduction or networking permitted without license from IHS
Not for Resale

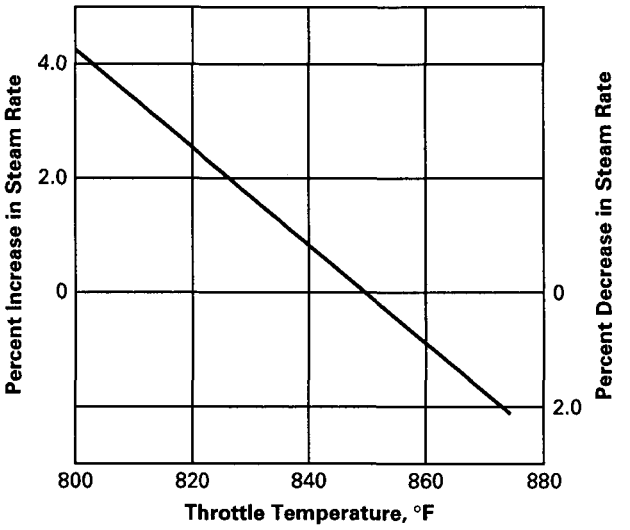

FIG. 6.4 THROTTLE TEMPERATURE CORRECTION

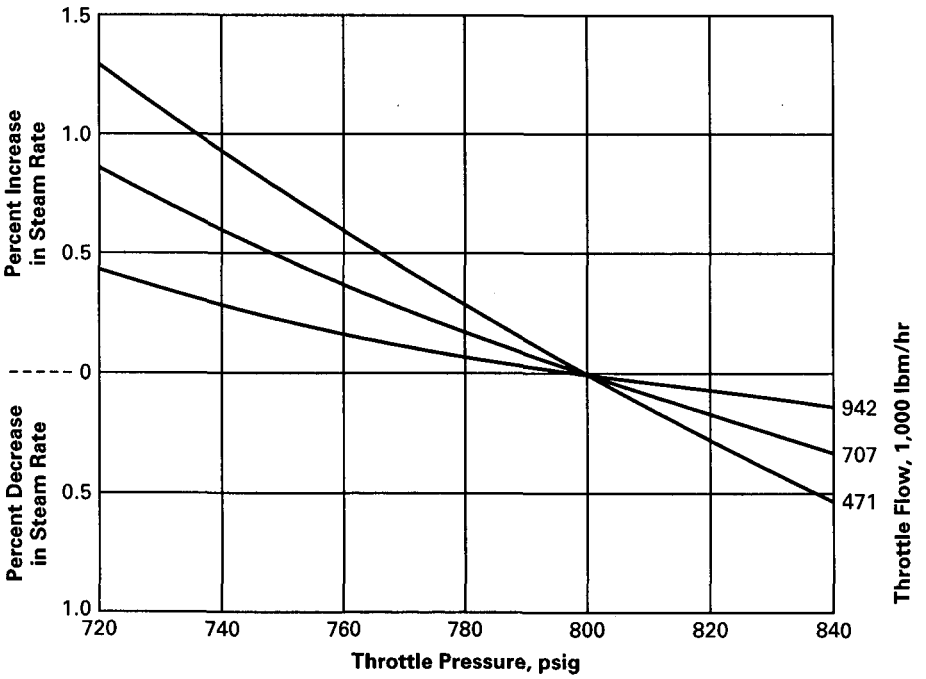

FIG. 6.5 THROTTLE PRESSURE CORRECTION

Copyright ASME International
Provided by IHS under license with ASME
No reproduction or networking permitted without license from IHS
Not for Resale

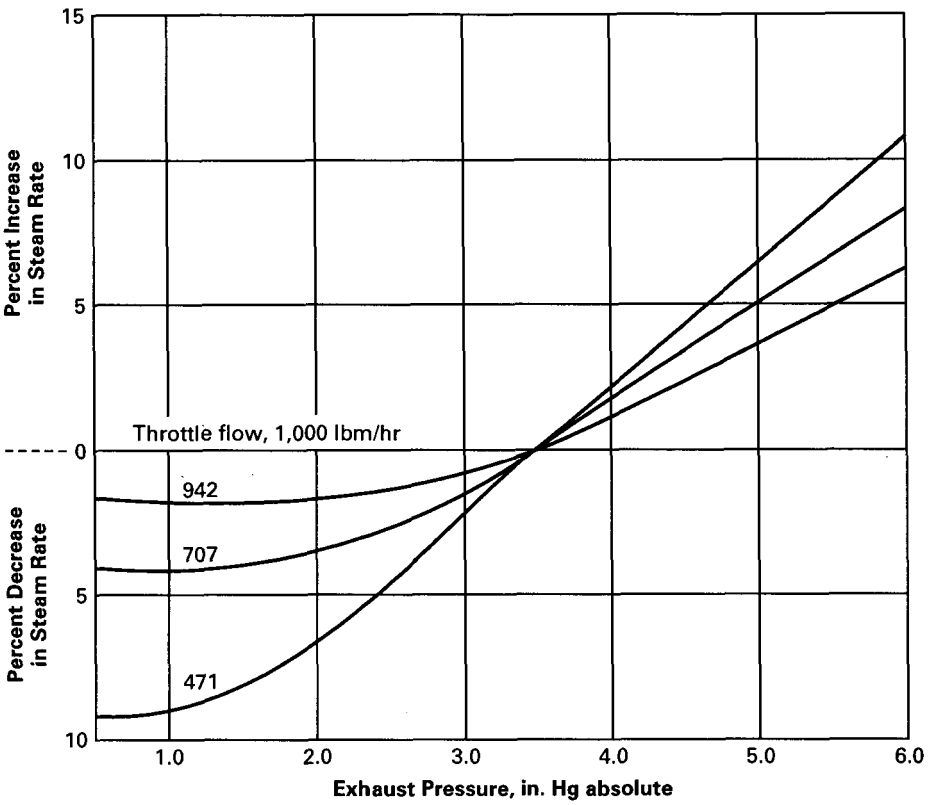

FIG. 6.6 EXHAUST PRESSURE CORRECTION

Copyright ASME International
Provided by IHS under license with ASME
No reproduction or networking permitted without license from IHS
Not for Resale

SECTION 6A — SAMPLE CALCULATIONS FOR A TEST OF A COMPLETE EXPANSION CONDENSING TURBINE USING SI UNITS[1]

6A.1 DESCRIPTION OF UNIT

The unit tested was a 3600-rpm condensing turbine with six control valves used in a gas turbine/steam turbine combined cycle power plant utilizing a single-pressure HRSG. There are no provisions for steam extraction out of the turbine stages, and throttle steam is provided by four unfired heat recovery steam generators supplied with the exhaust gas heat from four gas turbines.[2] The turbine rated capability is 112,000 kW with throttle steam conditions of 5,620 kPa absolute, 455°C, 90 mm Hg absolute exhaust pressure, and 0% cycle make-up. The generator is rated at 133,000 kVA, 0.85 power factor, and 308 kPa abs hydrogen pressure. The shaft and valve stem seals are supplied with steam controlled by an automatic steam seal regulator. An evacuator prevents steam from blowing out of the shaft-end seals to atmosphere, and a gland seal condenser recovers the heat from this steam in the main condensate. The condensed gland seal steam is directed to the condenser and is included in the condensate flow nozzle flow. Leakoff steam from the inner high pressure turbine seal chamber, lower valve stem leakoffs, and the steam seal regulator excess steam dump return to lower stages in the turbine. The specified steam rate of 3.702 kg/kWh at the rated operating conditions and at 112,000 kW output is on a locus-of-valve-points steam rate basis as shown in Fig. 6A.1.

[1] This sample calculation is for a test of a complete expansion condensing turbine using SI Units. For a sample calculation of the same turbine using U.S. Customary Units, see Section 6.

[2] For this example, the nameplate rating in U.S. Customary units example has been changed slightly for the rating in SI units to conform to what would logically be provided for the same unit rated in SI units. Since the test point is at a valve point, this causes the corrected flow and corrected kilowatt output to be slightly different in the SI units from what is indicated in the U.S. Customary units. The slight change in nameplate rating also causes the correction factors to be slightly different; however, since the available energy in both cases is almost identical, the final results remain the same for both sets of units.

6A.2 DESCRIPTION OF TEST INSTRUMENTATION

Location of instrumentation is shown on the instrumentation and flow diagram (Fig. 6.2). Throttle steam pressure and temperature were measured with deadweight gages and calibrated thermocouples. The exhaust pressure was measured with absolute pressure gages sensing the turbine exhaust pressure at eight basket tip sensors located at the two turbine side-exhaust flanges. Generator output was determined by three-wattmeter method. Steam flow to the turbine was established by measuring the condensate out of the condenser using a throat-tap flow nozzle and adjusting this flow for the amount of gland leakage from the hotwell pump and storage change in the condenser hotwell. The condenser was checked for leakage and found to be tight.

6A.3 SUMMARY OF THE TEST DATA ON NUMBER 5 VALVE POINT

All readings have been corrected for instrument calibration.

Throttle steam pressure	5,610 kPa abs
Throttle steam temperature	455.3°C
Exhaust pressure	85.8 mm Hga
Condensate flow	112.4886 kg/s
Generator output	110,131 kW
Generator hydrogen pressure	300 kPa abs
Generator power factor	0.892
Decrease in condenser hotwell storage (level drop)	0.0158 kg/s
Hotwell pump gland leakage	0.0064 kg/s

6A.4 DETERMINATION OF TURBINE THROTTLE FLOW

The throttle steam flow to the turbine was established from the condensate nozzle flow with correc-

Copyright ASME International
Provided by IHS under license with ASME
No reproduction or networking permitted without license from IHS
Not for Resale

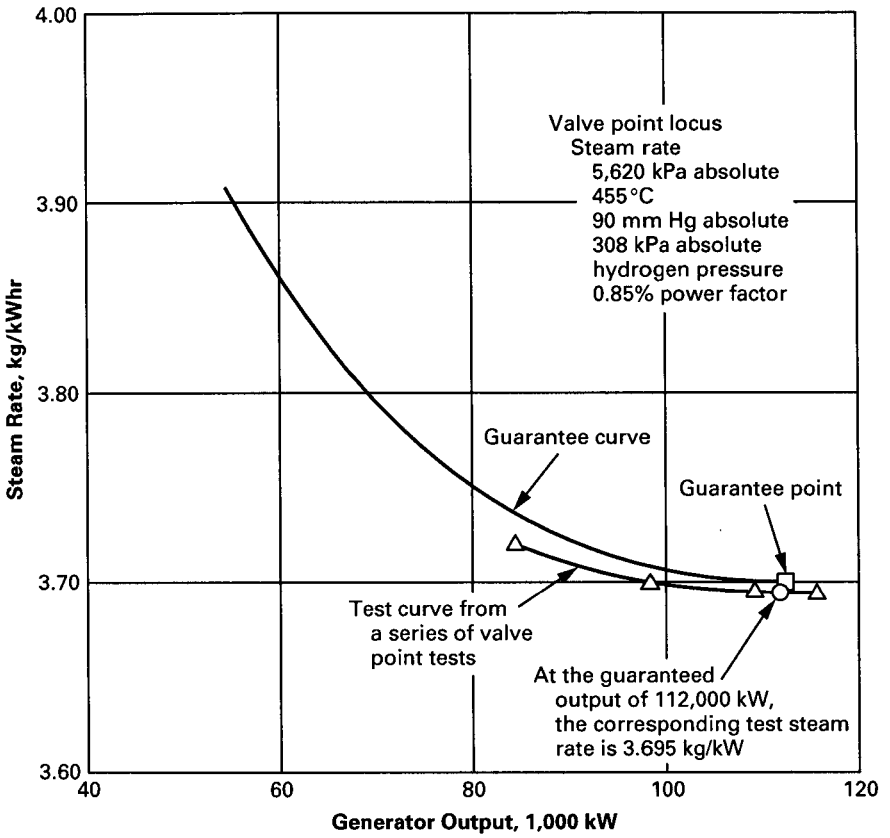

FIG. 6A.1 SPECIFIED PERFORMANCE

Copyright ASME International
Provided by IHS under license with ASME
No reproduction or networking permitted without license from IHS
Not for Resale

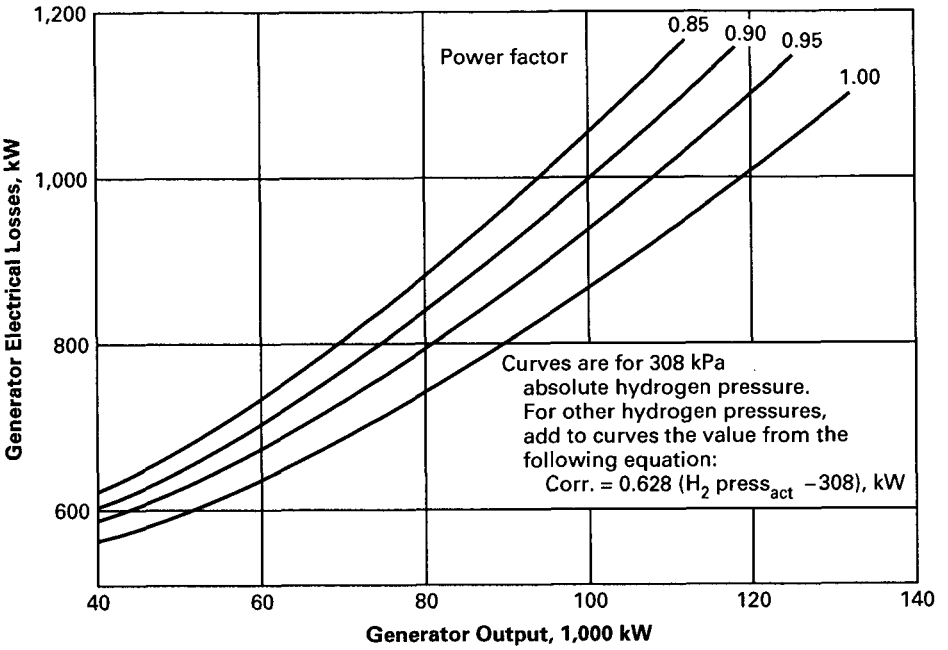

FIG. 6A.2 GENERATOR ELECTRICAL LOSSES

tion to account for the effect of losses or gains between the point of measurement and the turbine throttle. Though not conforming to the provisions of para. 4.8 in PTC 6, it may be preferable to use an orifice metering section to measure condensate flow for this application, where the device is used for testing at a Reynolds number within the calibration range, i.e., no extrapolation of the coefficient of discharge is required. Based on the values given in PTC 6R, in all likelihood the use of this device increases the uncertainty of the test result.

For an uncertainty equivalent to that of a throat-tap nozzle flow section, the orifice flow section requires great care in planning during the plant design phase, manufacturing of the orifice and section, laboratory calibration and installation of the section, similar to such care required for a throat-tap nozzle section. In this plant, as in many, the plant orifice flow sections did not meet the stringent requirements of Code flow sections (see PTC 19.5), nor was the spool piece long enough to accommodate a temporary orifice metering section. A throat-tap nozzle assembly was needed.

Flow measured by the flow nozzle	112.4886 kg/s
Decrease in hotwell storage	−0.0158 kg/s
Hotwell pump gland leakage	+0.0064 kg/s
Throttle steam flow during test	112.4792 kg/s

6A.5 CALCULATION OF GENERATOR OUTPUT CORRECTED TO SPECIFIED CONDITIONS

The test generator output was corrected for deviations from the specified values of power factor and hydrogen pressure, using the generator loss curve (Fig. 6A.2) supplied with the turbine performance data.

Measured generator output	110,131 kW
Losses for 0.892 power factor and 308 kPa absolute hydrogen pressure	1,093 kW
Correction for the test hydrogen pressure being 300 kPa absolute rather than the specified 308 kPa absolute	−5 kW
Total generator losses, test conditions	1,088 kW
Losses with specified conditions of 0.85 power factor and 308 kPa absolute hydrogen pressure	1,147 kW
Generator output corrected to specified operating conditions	
110,131 + (1,088 − 1,147)	110,072 kW

6A.6 TEST STEAM RATE

The test steam rate with specified generator hydrogen pressure and power factor was calculated by dividing the test value of turbine throttle flow by the corrected output.

Copyright ASME International
Provided by IHS under license with ASME
No reproduction or networking permitted without license from IHS
Not for Resale

$$\text{Test steam rate} = \frac{112.4792 \times 3600}{110{,}072}$$

$$= 3.679 \text{ kg/kWh}$$

6A.7 THROTTLE FLOW CORRECTED TO SPECIFIED CONDITIONS

The test steam rate was next corrected for deviations from the specified throttle steam and exhaust conditions. The first step was to determine what the throttle steam flow would have been, if the specified conditions existed. The corrected throttle steam flow is

$$w_s = w_t \sqrt{\frac{p_s}{p_t} \times \frac{v_t}{v_s}}$$

where

w = steam flow rate, kg/s
p = pressure, kPa abs
v = specific volume, m^3/kg
$_s$ = specified condition
$_t$ = test conditions

Flow correction factor =

$$\sqrt{\frac{5{,}620}{5{,}610} \times \frac{0.05654}{0.05640}} = 1.0021$$

Corrected throttle flow = 1.0021×112.4792
= 112.7153 kg/s

6A.8 STEAM RATE AND GENERATOR OUTPUT CORRECTED TO SPECIFIED CONDITIONS

Steam rate correction divisors were determined from the correction curves supplied with the turbine performance data (Figs. 6A.3, 6A.4, and 6A.5). The corrected value of the throttle steam flow was used in determining those corrections that vary as a function of the steam flow. No correction for the effect of speed was required because the turbine was operated at rated speed on a 60-Hz power system. Steam rate corrections are as follows:

	Test	Percent Change in Steam Rate	Correction Divisor
Throttle pressure	5,610 kPa abs (Fig. 6A.4)	+0.00	1.0000
Throttle temperature	455.3°C (Fig. 6A.3)	−0.08	0.9992
Exhaust pressure	85.8 mm Hga (Fig. 6A.5)	−0.36	0.9964
Combined correction divisor (product of correction divisors)			0.9956

Steam rate corrected to specified operating conditions

$$= \frac{\text{Test steam rate}}{\text{Correction divisor}}$$

$$= \frac{3.679}{0.9956} = 3.695 \text{ kg/kWh}$$

Generator output corrected to specified operating conditions

$$= \frac{\text{Corrected throttle steam flow}}{\text{Corrected steam rate}}$$

$$= \frac{112.7153 \times 3600}{3.695} = 109{,}817 \text{ kW}$$

6A.9 CONCLUSION

Fig. 6A.1 shows the steam rate plotted versus output. The guarantee curve is provided by the manufacturer. The test curve is drawn from a series of valve point tests with the steam rate and generator output, corrected to specified operating conditions, calculated in accordance with paras. 6A.3 through 6A.8. At the guaranteed output of 112,000 kW the corresponding test steam rate is determined from the test curve to be 3.702 kg/kWh. Therefore, the test steam rate is 0.007 kg/kWh, or 0.2%, better than guarantee.

Copyright ASME International
Provided by IHS under license with ASME
No reproduction or networking permitted without license from IHS
Not for Resale

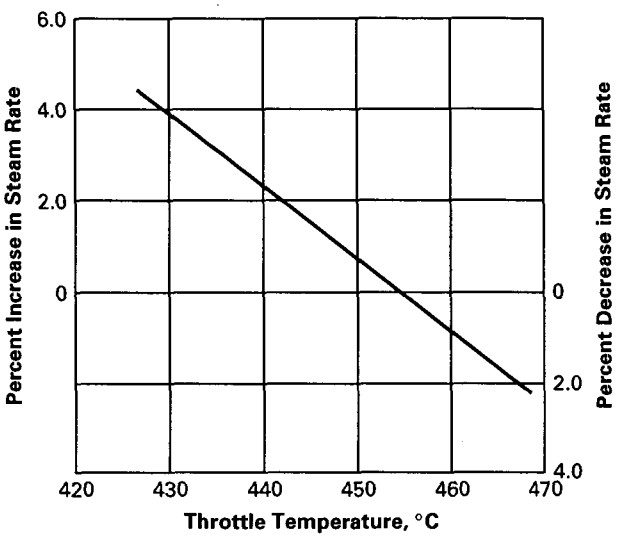

FIG. 6A.3 THROTTLE TEMPERATURE CORRECTION

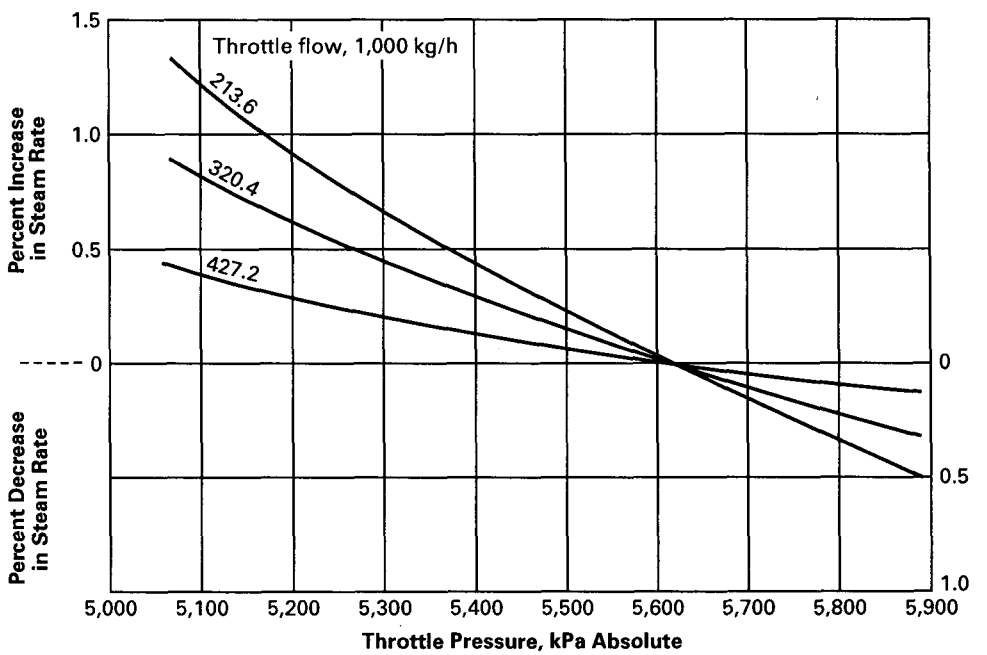

FIG. 6A.4 THROTTLE PRESSURE CORRECTION

Copyright ASME International
Provided by IHS under license with ASME
No reproduction or networking permitted without license from IHS
Not for Resale

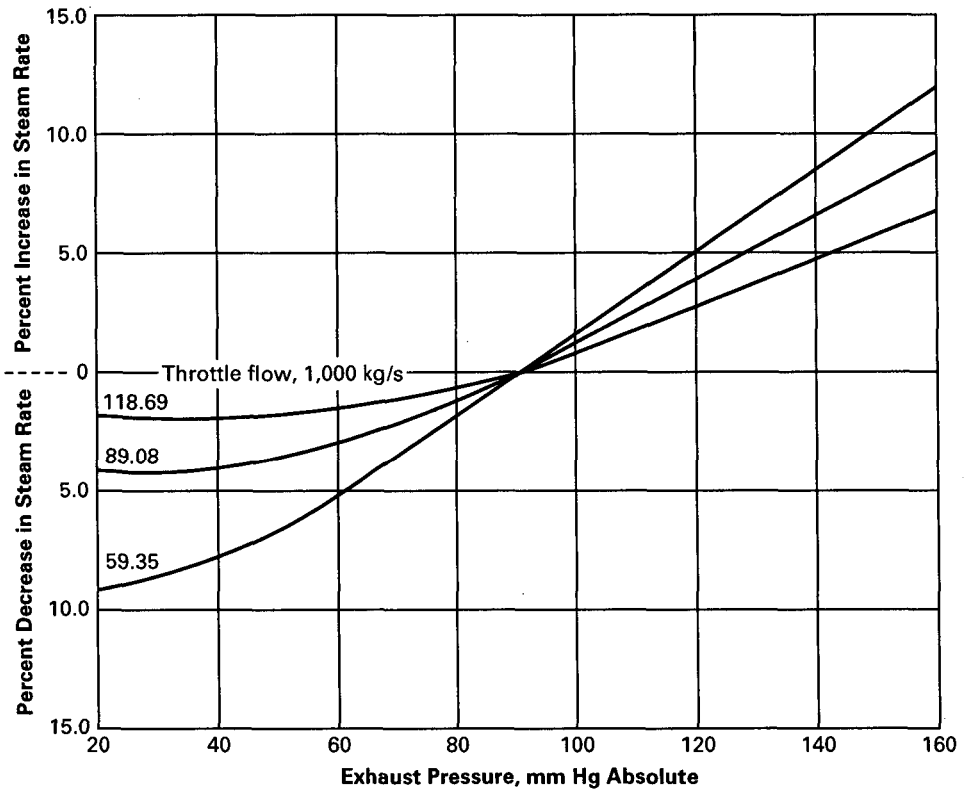

FIG. 6A.5 EXHAUST PRESSURE CORRECTION

Copyright ASME International
Provided by IHS under license with ASME
No reproduction or networking permitted without license from IHS
Not for Resale

SECTION 7 — SAMPLE CALCULATION FOR A TEST OF A NON-REHEAT REGENERATIVE CYCLE TURBINE

7.1 DESCRIPTION OF THE UNIT TO BE TESTED

The unit tested was a 26,704 kW non-reheat regenerative cycle turbine. Rated steam conditions are 850 psia, 900°F, with 1.5 in. Hg absolute exhaust pressure. The generator rating is 31,280 KVA at 0.90 power factor and 30 psig hydrogen pressure.

The cycle is shown on Fig. 7.1. There are four stages of feedwater heating. The feedwater pump is motor driven. All main turbine glands are steam-sealed. A shaft-driven exciter is used.

7.2 DESCRIPTION OF THE PERFORMANCE GUARANTEE TO BE VERIFIED BY TESTING

Performance was specified on the basis of gross turbine heat rate (GTHR) at the cycle conditions as specified in the contract. The test was conducted in accordance with ASME PTC 6-1996. Gross turbine heat rate is defined by

$$\text{GTHR} = \frac{\text{Heat Supplied to Cycle}}{\text{Generator Output}}$$

It was mutually agreed that the specified heat rate would be compared to the corresponding corrected test heat rate at the specified kilowatt load on a locus curve drawn through the heat rate points in accordance with Code para. 3.13.2.

Figure 7.1 is a heat balance showing the specified performance of the turbine, with contract cycle conditions. The contract cycle conditions are as follows:

Inlet Steam	
Throttle pressure	865 psia
Throttle temperature	900°F
Desuperheating spray flow	0 lbm/hr
High Pressure Heater (Heater 4) Performance	
Terminal temperature difference (TTD)	5°F
Drain cooler approach (DCA)	10°F
Extraction line pressure drop	5%
Turbine exhaust pressure	1.5 in. Hga
Miscellaneous	
Air ejector flow (from main steam line)	500 lbm/hr
Other cycle losses	0
Power factor	0.90
Hydrogen pressure	30 psig
Guaranteed Performance Corrected to Group 1 and 2 Corrections	
Heat rate	9,669 Btu/kWhr
Output	26,704 kW

The parties to the test mutually agreed that the feedwater pump enthalpy rise and condensate pump performance parameters would be neglected.

7.3 DESCRIPTION OF TESTING AND INSTRUMENTATION

A series of valve-point tests were conducted to establish the test curve in Fig. 7.2. Because heat rate changes with load, the curve will be used to determine the test heat rate corresponding to the guaranteed output. The test described in this sample calculation was run with the governing valves wide open.

7.3.1 Flows. Condensate flow was measured by means of a calibrated ASME throat-tap nozzle located at the deaerator inlet.

Feedwater pump seal injection flow and desuperheating spray flow were measured with orifices. The air ejector steam flow was determined from the measured pressure and temperature of its steam supply, and the cross-sectional area of the jets, as discussed in para. 4.16.5 of the Code. The extraction steam supply to the combustion air heating coils and boiler blowdown were isolated. Flows were well isolated in accordance with para. 3.5.5 of the Code.

7.3.2 Pressures and Temperatures. Steam pressures were read with high-accuracy calibrated transmitters calibrated prior to the test.

Turbine exhaust pressure was measured with absolute pressure transmitters.

Copyright ASME International
Provided by IHS under license with ASME
No reproduction or networking permitted without license from IHS
Not for Resale

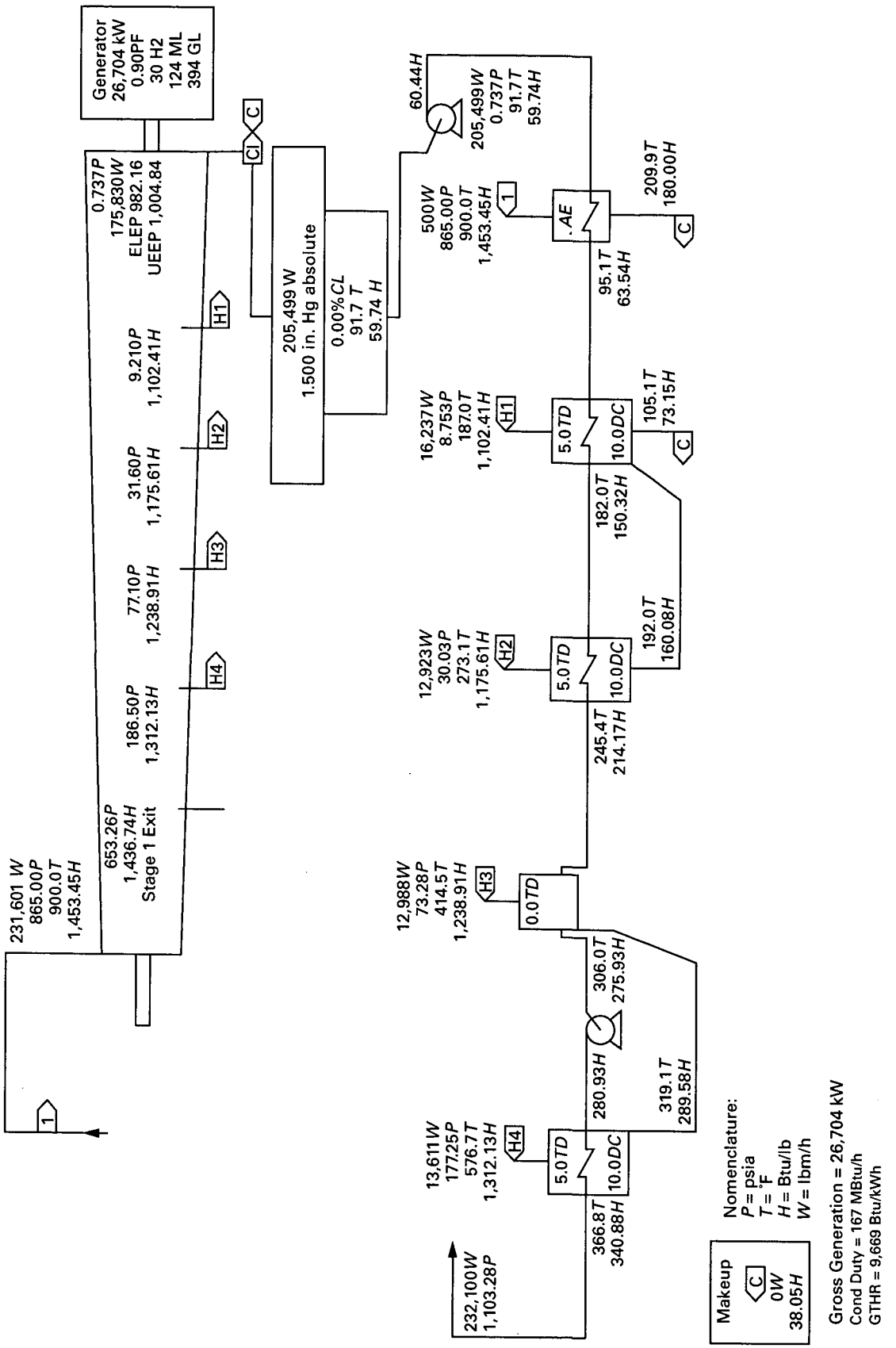

FIG. 7.1 GUARANTEE HEAT BALANCE

Copyright ASME International
Provided by IHS under license with ASME
No reproduction or networking permitted without license from IHS
Not for Resale

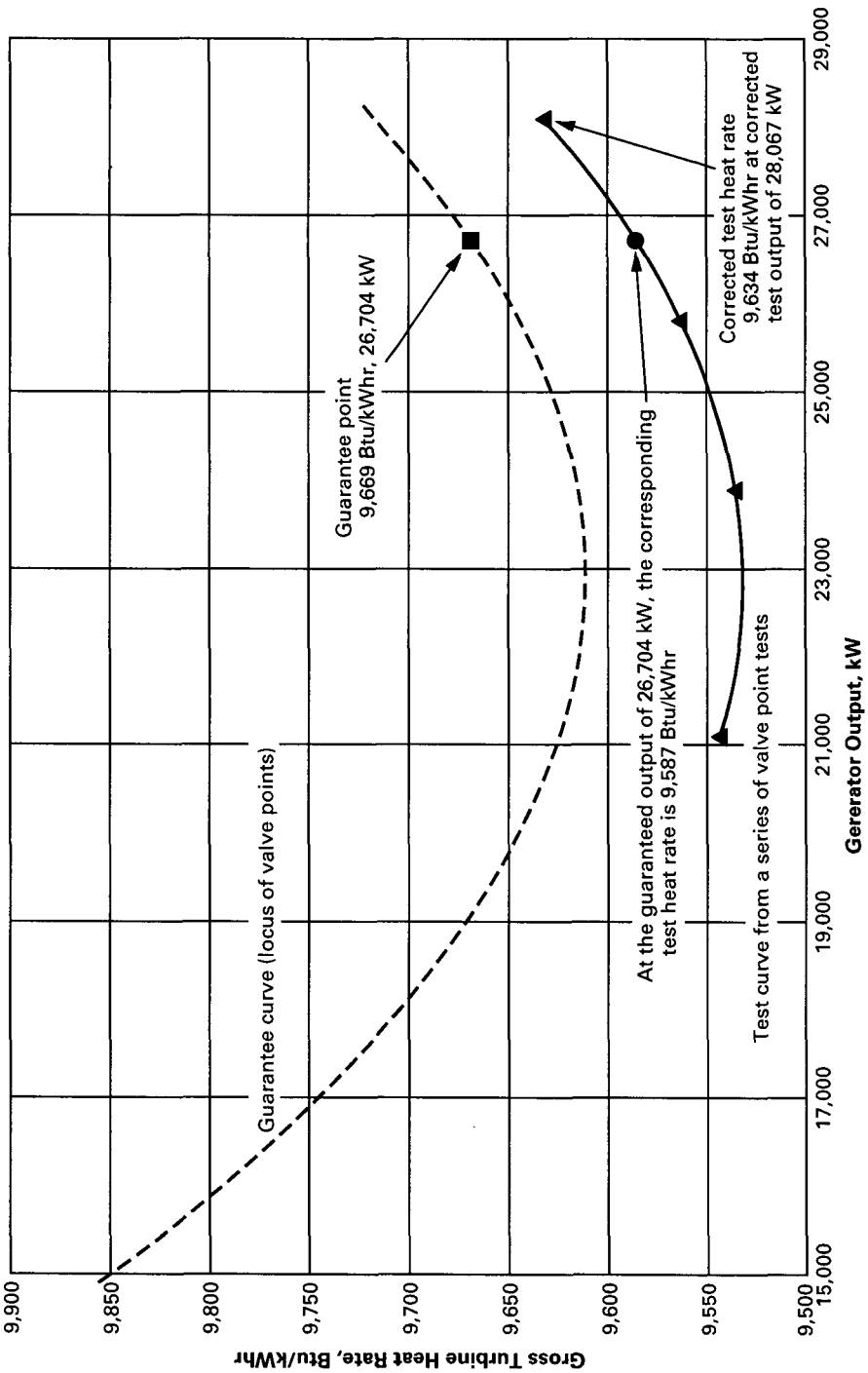

FIG. 7.2 DETERMINATION OF TEST HEAT RATE AT GUARANTEED OUTPUT

Copyright ASME International
Provided by IHS under license with ASME
No reproduction or networking permitted without license from IHS
Not for Resale

All temperatures were measured by means of calibrated thermocouples with 32°F reference junctions, or calibrated four-wire RTDs.

Extraction steam pressures were measured at the turbine flange and at the heaters.

7.3.3 Power. Generator output was measured with three single-phase, integrating watthour meters.

7.4 SUMMARY OF TEST DATA

The data recorded during the test was averaged and corrected for instrument calibrations, water legs, barometric pressures, and ambient temperatures. The data is shown in Table 7.1.

7.5 DESCRIPTION OF THE CALCULATIONS

This sample calculation demonstrates the determination from test data of heat rate, and correction of heat rate to the specified conditions (called Group 1 and Group 2 corrections in the Code).

Paragraph 5.8.2 of the Code states that corrections for Group 1 cycle conditions can be made either by heat balance calculation or by application of correction curves or tables. The Code states that Group 2 corrections must be by the correction curve or table method.

In this sample calculation, the correction curve method is used for both Group 1 and Group 2 corrections. Sample Calculation 8 demonstrates the use of the heat balance method, although for a reheat turbine. The heat balance calculation for a non-reheat turbine would be similar. If the heat balance method is selected for a non-reheat turbine, Sample Calculation 8 should be used for guidance.

The calculations are divided into two parts:

(a) Determination of test heat rate

(b) Calculation of test heat rate corrected to contract conditions

7.6 DETERMINATION OF TEST HEAT RATE

7.6.1 Water Balance. The degree of cycle isolation of the system was checked by water balance. Any unaccounted for losses from the system were assumed to have occurred in the steam generator.

Hotwell storage change (level fall)	−200 lbm/hr
Deaerator storage change (level unchanged)	0 lbm/hr
Boiler drum level change (level unchanged)	0 lbm/hr
Unaccounted-for change in storage	−200 lbm/hr

Paragraph 3.5.3 of the Code limits the unaccountable loss to 0.1% of full load test throttle flow. Unaccounted change in storage, as a percentage of throttle flow, at full load = (200/232,100) × 100 = 0.086%. This is an acceptable quantity.

7.6.2 Calculation of Test Feedwater Flow. Condensate flow measurement at the deaerator inlet condensate flow nozzle (w_c) was 214,044 lbm/hr. The corresponding feedwater flow to the boiler was determined using an iterative procedure as follows:

Step 1: The feedwater flow (w_f) was assumed to be equal to the value (232,100 lbm/hr), shown on the design heat balance, Fig. 7.1. The assumed value will not affect the final result but may affect the number of iterations needed to arrive at the final result.

Step 2: The extraction flow to the No. 4 heater (w_{e4}) was determined by heat balance.

$$w_{e4} = w_{fw}\,(h_{4fwout} - h_{4fwin})/(h_{4stmin} - h_{4drn})$$

$$w_{e4} = 232{,}100 * \frac{(346.9 - 276.3)}{(1{,}317.8 - 282.7)}$$

$$= 15{,}831 \text{ lbm/hr}$$

Step 3: The feedpump suction flow (w_{fps}) was found by mass balance, using the feedwater flow w_{fw}, spray flow ww_{shs}, and feed pump seal injection flow w_{inj}.

$$w_{fps} = w_{fp} + w_{shs} - w_{inj}$$

$$w_{fps} = 232{,}100 + 3{,}500 - 1{,}997$$

$$= 233{,}603 \text{ lbm/hr}$$

Step 4: The extraction flow to the deaerator (w_{e3}) and the condensate flow to the deaerator (w_c) were calculated by a heat and mass balance on the deaerator.

Deaerator Mass Balance

$$w_{fps} = w_{e4} + w_{e3} + w_c$$

$$233{,}603 = 15{,}831 + w_{e3} + w_c$$

Heat Balance

$$273.5 * w_{fps} = 282.7 * w_{e4} + 1{,}307.2 * w_{e3} + 212.8 * w_c$$

$$273.5 * 233{,}603 = 282.7 * 15{,}831 + 1{,}307.2 * w_{e3} + 212.8 * w_c$$

Copyright ASME International
Provided by IHS under license with ASME
No reproduction or networking permitted without license from IHS
Not for Resale

TABLE 7.1
TEST DATA

Unit load gross	28,150 kW
Throttle temperature	904.0°F
Throttle pressure	872.0 psia
Exhaust pressure	1.98 in. Hga
Condenser subcooling	0°F (no correction required)
Desuperheating spray flow	3,500 lbm/hr
Seal injection flow (net)	1,997 lbm/hr
Condensate nozzle flow	214,044 lbm/hr
Air ejector flow	500 lbm/hr
Hydrogen pressure	30 psig
Power factor	0.90 (no correction required)
Heater 4 (High Pressure)	
Steam inlet temperature	588.5°F
Steam pressure	183.3 psia
Saturation temperature	374.5°F (from steam tables)
Feedwater outlet temperature	372.5°F
Feedwater outlet pressure	1,125 psia
Test TTD	2.0°F
Drain temperature	312.5°F
Feedwater inlet temperature	304.5°F
Test DCA	7.9°F
Steam pressure at turbine	189.0 psia
Steam pressure at heater	183.3 psia
Test pressure drop	3.0% of turbine pressure
Heater 3 (Deaerator)	
Steam pressure	72.9 psia
Saturation temperature	305.7°F (from steam tables)
Feedpump discharge pressure	1,135 psia
Feedpump discharge temperature	304.5°F
Feedwater outlet temperature	303.7°F
Test TTD	2.0°F
Steam pressure at turbine	76.0 psia
Steam pressure at heater	72.9 psia
Heater 2 (Low Pressure)	
Steam pressure	29.92 psia
Saturation temperature	250.1°F (from steam tables)
Feedwater outlet temperature	244.1°F
Test TTD	6.0°F
Drain temperature	191.6°F
Feedwater inlet temperature	179.6°F
Test DCA	12.0°F
Steam pressure at turbine	31.50 psia
Steam pressure at heater	29.92 psia
Heater 1 (Low Pressure)	
Steam pressure	8.87 psia
Saturation temperature	187.6°F (from steam tables)
Feedwater outlet temperature	179.6°F
Test TTD	8.0°F
Drain temperature	114.2°F
Feedwater inlet temperature	104.2°F
Test DCA	10.0°F
Steam pressure at turbine	9.44 psia
Steam pressure at heater	8.87 psia

Copyright ASME International
Provided by IHS under license with ASME
No reproduction or networking permitted without license from IHS
Not for Resale

Solving these equations simultaneously gives:

w_{e3} = 11,945 and w_c = 205,827 lbm/hr

Step 5: The calculated value of w_c (205,827) was 3.8% below the measured value of 214,044. The feedwater flow is increased by 3.8% to 240,920 lbm/hr for the next iteration.

Step 6: Steps 1 through 5 were repeated twice until the calculation process converged the following:

Condensate flow	214,044 lbm/hr
Feedpump suction flow	242,933 lbm/hr
Feedwater flow	241,430 lbm/hr

7.6.3 Calculation of Throttle Steam Flow. Throttle steam flow (w_t) is calculated from the feedwater flow, by accounting for the attemporation flow (w_{shs}), air ejector flow (w_{aj}), and the total unaccounted cycle flows (w_u) assumed to have leaked from the cycle in the steam generator.

$$w_t = w_f + w_{shs} + w_u - w_{aj}$$
$$w_t = 241,430 + 3,500 - 200 - 500$$
$$= 244,230 \text{ lbm/hr}$$

7.6.4 Calculation of Test Heat Rate

$$\text{Test Heat Rate} = \frac{\text{Heat Supplied to Cycle}}{\text{Generator Output}}$$

Heat supplied to cycle is found from flows and their enthalpies entering and leaving the boiler. It was agreed in the contract to include the flow to the steam jet air ejector in the heat supplied to the cycle.

$$\text{Heat supplied} = (w_t - w_{shs})(h_t - h_{fw}) + w_{shs}(h_t - h_{fpo}) + w_{aj}(h_t - h_{fw})$$
$$= (244,230 - 3,500)(1,455.4 - 346.9) + 3,500(1,455.4 - 276.3) + 500(1455.4 - 346.9)$$
$$= 271,531,305 \text{ Btu/hr}$$

Therefore, the test heat rate is:

$$\frac{271,531,305 \text{ Btu/hr}}{28,150 \text{ kW}} = 9,646 \text{ Btu/kWhr}$$

7.7 CORRECTION OF TEST PERFORMANCE TO SPECIFIED OPERATING CONDITIONS

Tests should be conducted with the least possible deviation from specified conditions, to minimize correction errors (see PTC 6-1996, Table 3.1 for limits of deviations). Corrections to specified operating conditions are separated into Group 1 and Group 2 corrections.

7.7.1 Group 1 Corrections. The Group 1 corrections are for variables primarily affecting the feedwater heating system. The turbine manufacturer provided the correction curves for the Group 1 corrections following Table 8.1 in PTC 6-1996. The Group 1 curves are shown in Figs. 7.3 and 7.4. The corrections are calculated below and summarized following the calculations.

The following Group 1 corrections were made:

(a) Superheat desuperheating spray flow

(b) Final feedwater heater terminal temperature difference (TTD)

(c) Final feedwater heater extraction line pressure drop

Based on test measurements, other Group 1 corrections were deemed negligible.

7.7.2 Superheat Desuperheating Spray Correction. The superheat desuperheating spray operated at 3,500 lb/hr during the test. The spray flow is taken off the discharge of the feedwater pump upstream of Heater 4. The contract specified 0.0 lbm/hr spray flow. The correction will be made using Fig. 7.3 and the desuperheating flow correction equation from Table 8.1 of the PTC 6-1996 code.

$$\text{Corr.} = 1 + [\%\ \text{Corr.}/(100 \times \%\ \text{Desup. Flow})]$$
$$\%\ \text{Desup. Flow} = [w_{shs} \times 100]/w_t$$
$$= [3,500 \times 100]/244,730$$
$$\%\ \text{Desup. Flow} = 1.43\%$$
$$\%\ \text{HR Corr.} = 0.017\%\ \text{from Fig. 7.3}$$
$$\text{Corr.} = 1 + [\%\ \text{Corr.}/100 \times \%\ \text{Desup. Flow}]$$
$$\text{HR Corr.} = 1 + [(0.017/100) \times 1.43]$$
$$= 1.0002$$
$$\%\ \text{Load Corr.} = 0.032\%\ \text{from Fig. 7.3}$$
$$\text{Corr.} = 1 + [(\%\ \text{Corr.}/100) \times \%\ \text{Desup. Flow}]$$
$$\text{Load Corr.} = 1 + [(0.032/100) \times 1.43]$$
$$= 1.0005$$

7.7.3 TTD Correction of Final Feedwater Heater. The final feedwater heater operated at a TTD of 2°F during the test. The contract specified 5°F TTD. The correction will be made using Fig. 7.4 and the

Copyright ASME International
Provided by IHS under license with ASME
No reproduction or networking permitted without license from IHS
Not for Resale

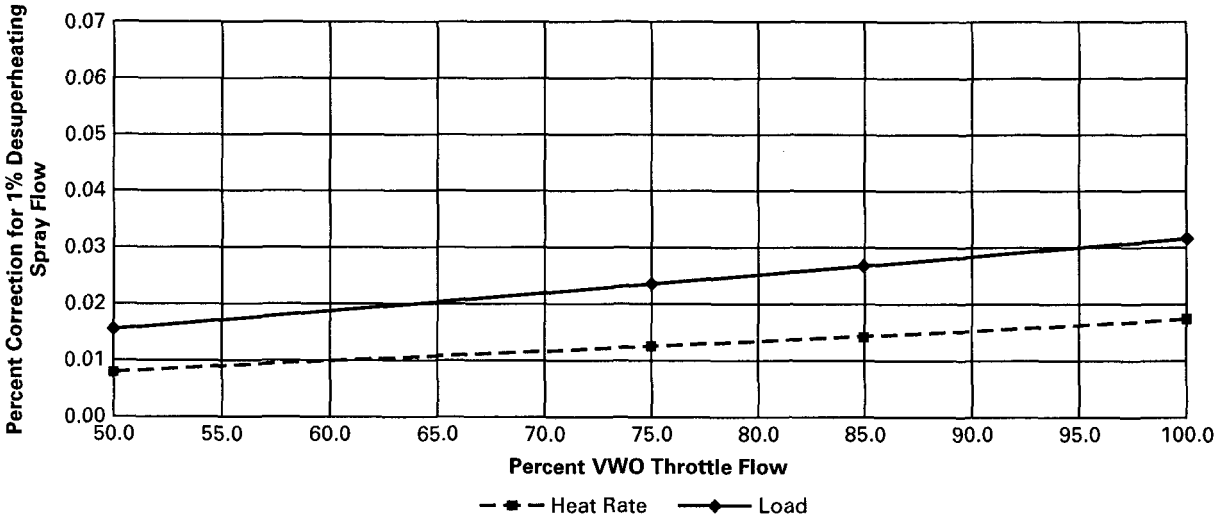

7.3 CORRECTION FOR MAIN STEAM DESUPERHEATING SPRAY FLOW

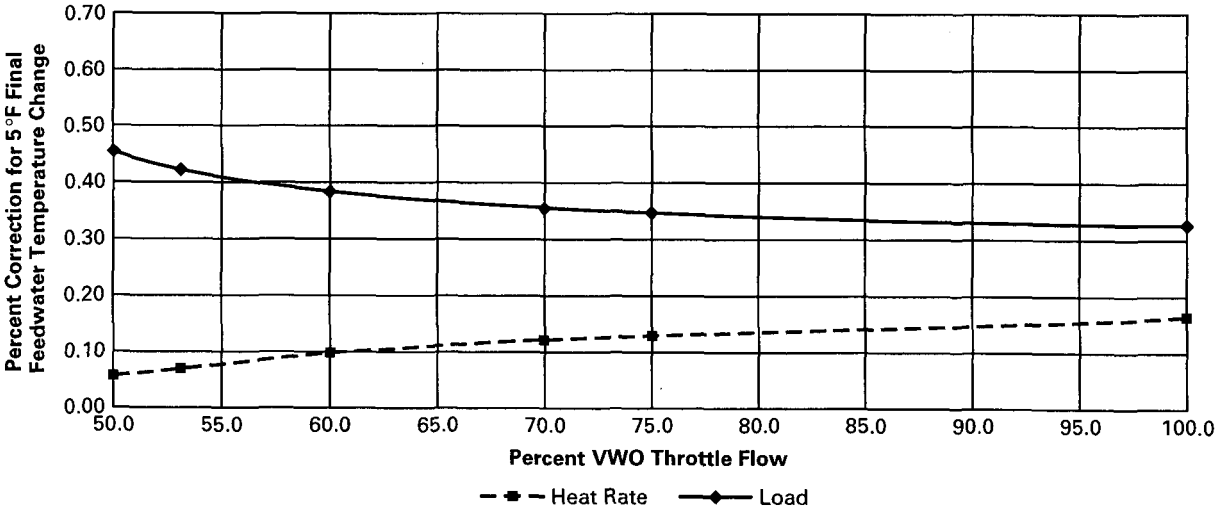

7.4 FINAL FEEDWATER TEMPERATURE CORRECTION

Copyright ASME International
Provided by IHS under license with ASME
No reproduction or networking permitted without license from IHS
Not for Resale

TABLE 7.2
GROUP 1 CORRECTIONS

Variable	Heat Rate Factor	Load Factor
SH desuperheating spray flow	1.0002	1.0005
Final feedwater heater TTD	0.9990	0.9980
Final feedwater heater ELPD	0.9995	0.9989
Combined correction factor (product)	0.9987	0.9974

terminal difference correction equation from Table 8.1 of the PTC 6-1996 code.

$$\text{Corr.} = 1 + [\%\ \text{Corr./100}\ \{(TD_{test} - TD_{design})/5°\text{F}\}]$$
$$\%\ \text{HR Corr.} = 0.16\%\ \text{per}\ 5°\text{F change from Fig. 7.4}$$
$$\text{HR Corr.} = 1 + [0.16/100\ \{(2 - 5)/5°\text{F}\}]$$
$$= 0.9990$$
$$\%\ \text{Load Corr.} = 0.33\%/5°\text{F change from Fig. 7.4}$$
$$\text{Load Corr.} = 1 + [0.33/100\ \{(2 - 5)/5°\text{F}\}]$$
$$= 0.9980$$

7.7.4 Extraction Line Pressure Drop Correction of Top Heater. The final feedwater heater extraction line pressure drop (ELPD) was 3% during the test as compared to 5% specified in the contract. The correction will be made using the same Fig. 7.4 as above in para. 7.7.3. The correction values will also be the same since the corrections change only with load. Refer to the extraction line pressure drop correction equation from Table 8.1 of the PTC 6-1996 code.

$$\text{Corr.} = 1 + [\%\ \text{Corr./100}\ \{(t_{sat}\ \text{at}\ (p_{tb\ test} - p_{drop\ design}) - (t_{sat}\ \text{at}\ (p_{tb\ test} - p_{drop\ test})/5°\text{F})]$$
$$\text{From Fig. 7.1: } p_{drop\ design} = 186.5 - 177.3$$
$$= 9.2\ \text{psi}$$
$$p_{tb\ test} - p_{drop\ design} = 189.0 - 9.2$$
$$= 179.8\ \text{psia}$$
$$t_{sat}\ \text{at}\ 179.8\ \text{psia} = 373.0°\text{F}$$
$$\text{From test data: } p_{drop\ test} = 189.0 - 183.3$$
$$= 5.7\ \text{psi}$$
$$p_{tb\ test} - p_{drop\ test} = 189.0 - 5.7$$
$$= 183.3\ \text{psia}$$
$$t_{sat}\ \text{at}\ 183.3\ \text{psia} = 374.6°\text{F}$$
$$\%\ \text{HR Corr.} = 0.16\%\ \text{per}\ 5°\text{F change from Fig. 7.4}$$
$$\text{HR Corr.} = 1 + [0.16/100\ \{(373.0 - 374.6)/5°\text{F}\}]$$
$$= 0.9995$$
$$\%\ \text{Load Corr.} = 0.33\%/5°\text{F change from Fig. 7.4}$$
$$\text{Load Corr.} = 1 + [0.33/100\ \{(373.0 - 374.6)/5°\text{F}\}]$$
$$= 0.9989$$

7.7.5 Summary of Group 1 Corrections. Table 7.2 summarizes the heat rate and load correction factors that were required in the contract for this turbine.

7.7.6 Group 2 Corrections. The Group 2 corrections are for deviations primarily affecting the turbine performance discussed in paras. 5.8.3 and 5.8.4 of PTC 6-1996. The turbine manufacturer provided the correction curves for the Group 2 corrections. If the curves were unavailable they could be created using a heat balance program and varying each parameter to determine the effect on heat rate and output. The Group 2 curves are shown in Figs. 7.5 through 7.9. The corrections are calculated below and summarized following the calculations.

The contract requires Group 2 corrections for the following:

(a) Throttle temperature
(b) Throttle pressure
(c) Back pressure

The throttle flow should be corrected to design inlet conditions per para. 5.4.2 of the PTC 6-1996 code.

$$w_{tc} = w_t \sqrt{\frac{P_s \times v_t}{P_t \times v_s}}$$

at the specified pressure $P_s = 850$ psia, $t_s = 900°\text{F}$, $v_s = 0.8869\ \text{ft}^3/\text{lb}$

at the tested conditions $P_t = 872$ psia, $t_t = 904°\text{F}$, $v_t = 0.8825\ \text{ft}^3/\text{lb}$

$$w_{tc} = 244{,}230 \sqrt{\frac{865 \times 0.8825}{872 \times 0.8869}}$$

$$w_{tc} = 242{,}644\ \text{lb/hr}$$

7.7.7 Comparison Between Test and Specified Cycle, Group 2 Variables. Table 7.3 shows the deviations of Group 2 variables as tested as compared to those specified.

Copyright ASME International
Provided by IHS under license with ASME
No reproduction or networking permitted without license from IHS
Not for Resale

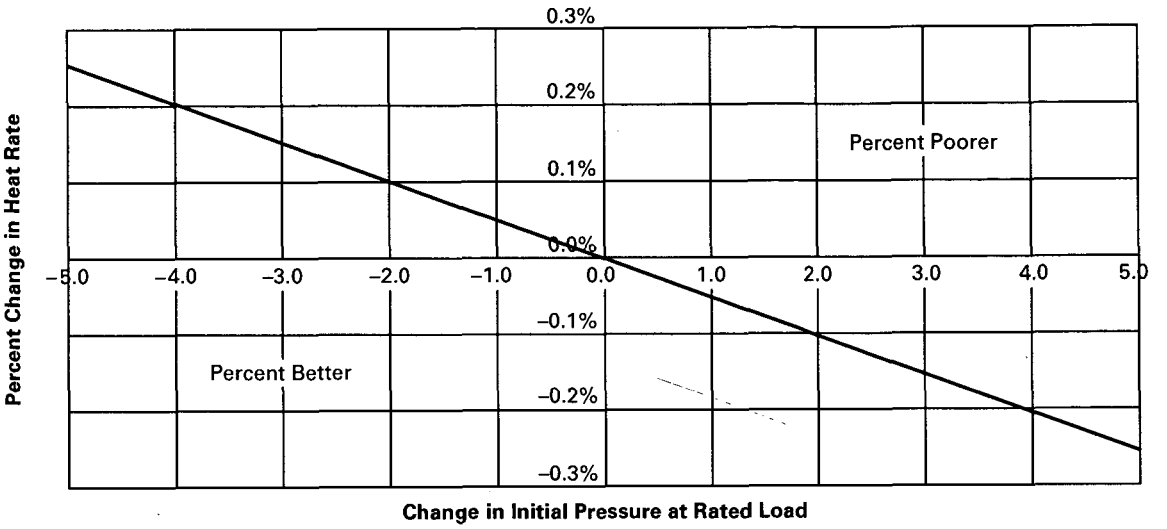

FIG. 7.5 THROTTLE PRESSURE CORRECTION FACTORS: HEAT RATE

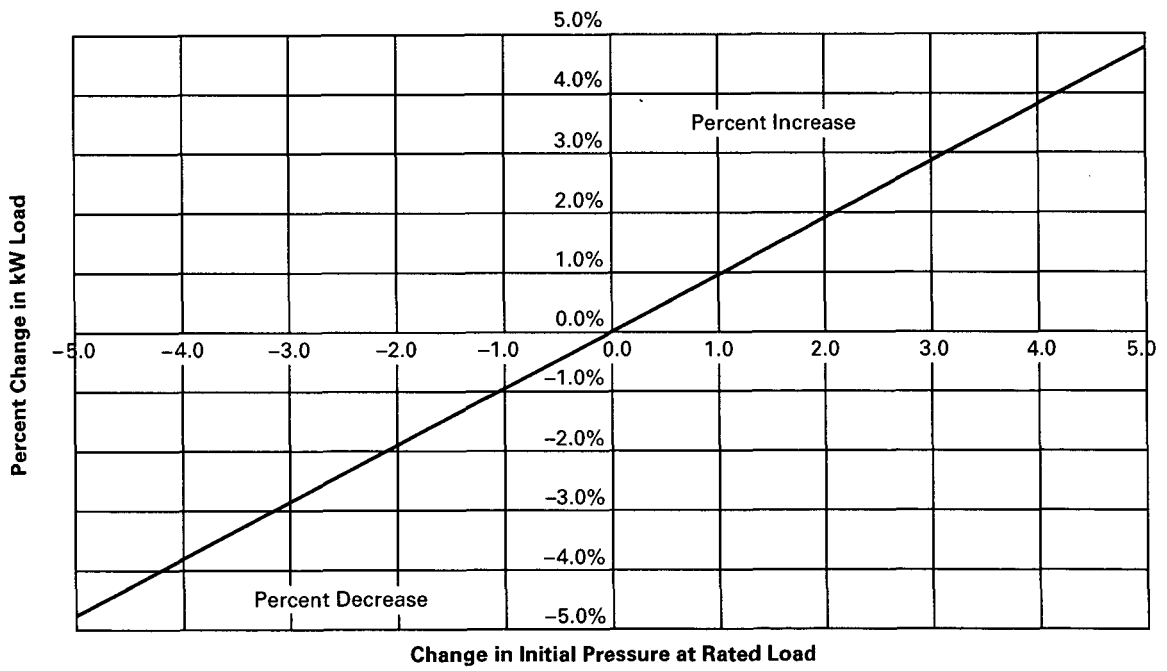

FIG. 7.6 THROTTLE PRESSURE CORRECTION FACTORS: OUTPUT

Copyright ASME International
Provided by IHS under license with ASME
No reproduction or networking permitted without license from IHS
Not for Resale

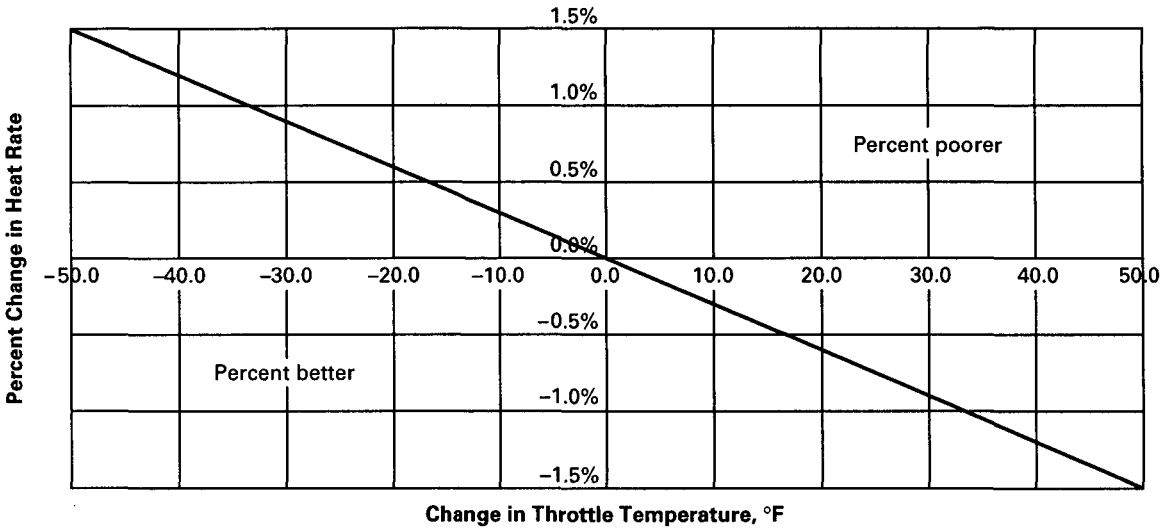

FIG. 7.7 THROTTLE TEMPERATURE CORRECTION FACTORS: HEAT RATE

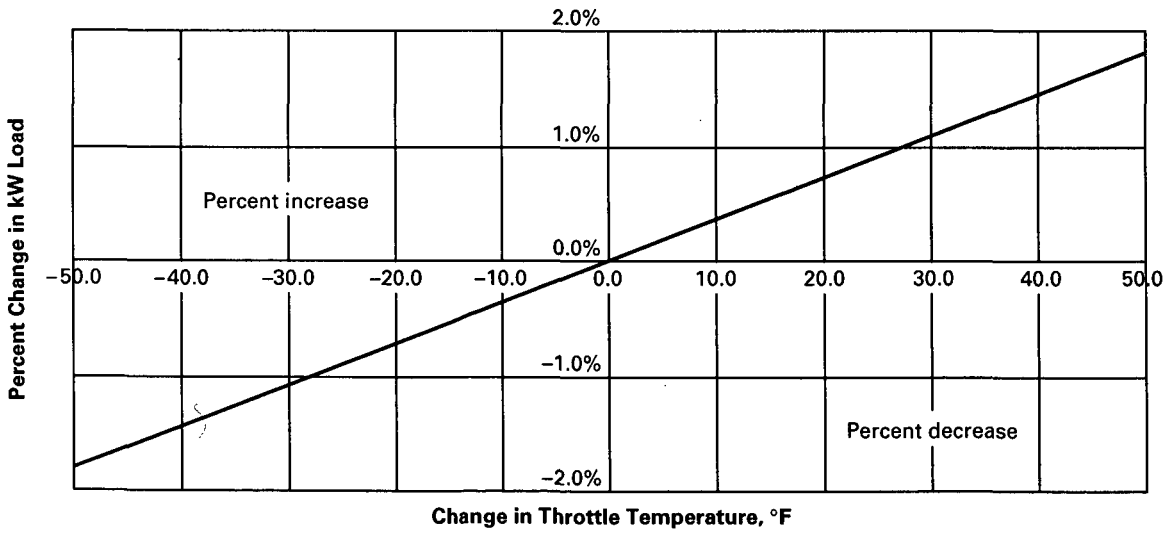

FIG. 7.8 THROTTLE TEMPERATURE CORRECTION FACTORS: OUTPUT

Copyright ASME International
Provided by IHS under license with ASME
No reproduction or networking permitted without license from IHS
Not for Resale

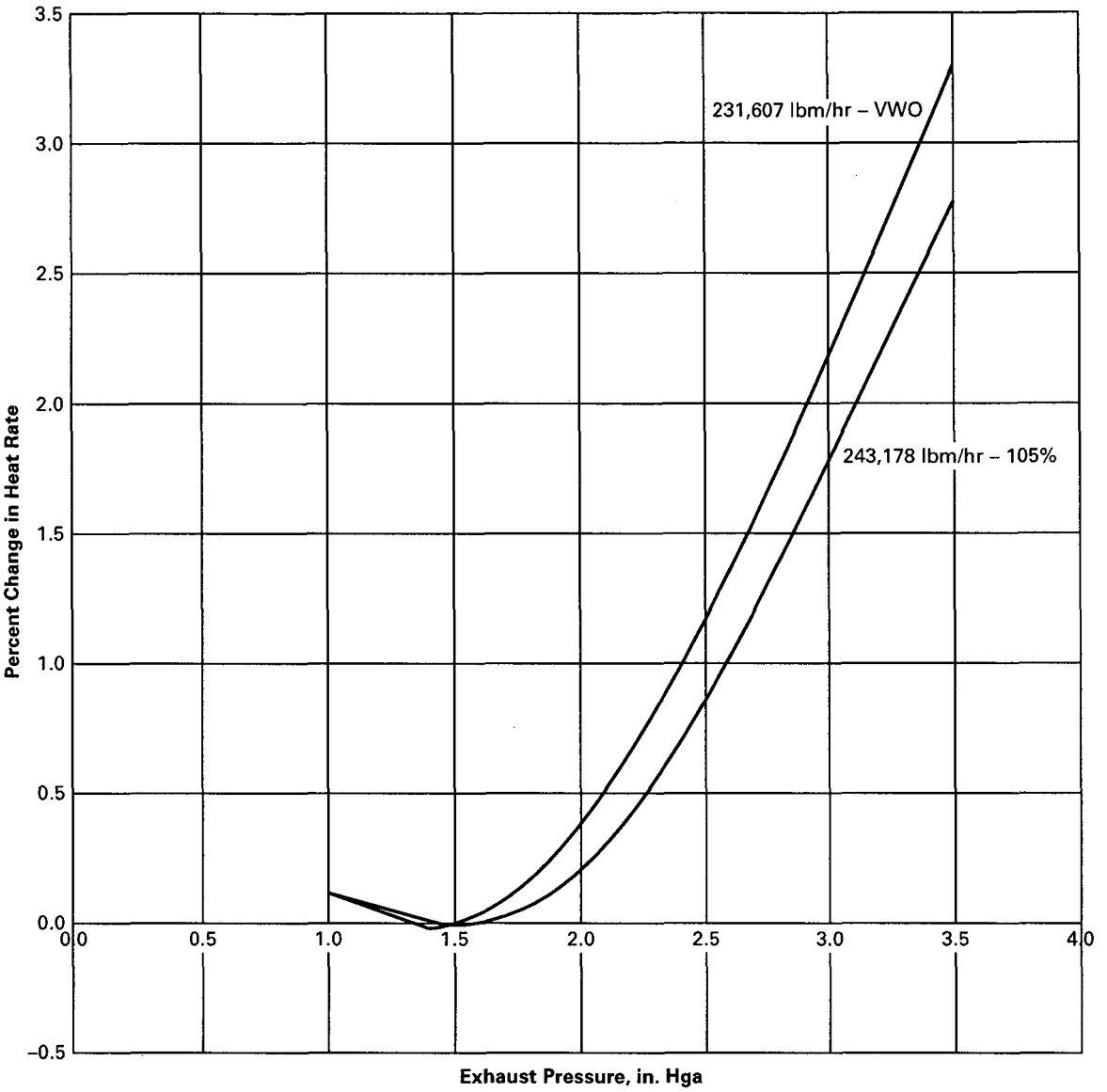

GENERAL NOTES:
(a) These correction factors assume constant control valve opening. Apply to heat rates and kilowatt loads at 1.5 in. Hg. absolute, and 0% make-up.
(b) The percent change in kilowatt load for various exhaust pressures is equal to (minus the percent increase in heat rate × 100) / (100 + percent increase in heat rate).

FIG. 7.9 EXHAUST PRESSURE CORRECTION FACTOR

Copyright ASME International
Provided by IHS under license with ASME
No reproduction or networking permitted without license from IHS
Not for Resale

TABLE 7.3
DEVIATIONS OF GROUP 2 VARIABLES

Variable	Test Value	Specified Value	Change
Throttle pressure, psig	857	850	+7 psi
Throttle temperature, °F	904	900	+4°F
Back pressure, in. Hga	1.98	1.50	+0.48 in. Hg

TABLE 7.4
GROUP 2 CORRECTIONS

Variable	Heat Rate Factor	Load Factor
Throttle pressure (Figs. 7.5 and 7.6)	0.9996	1.0080
Throttle temperature (Figs. 7.7 and 7.8)	0.9990	1.0015
Exhaust pressure (Fig. 7.9)	1.0039	0.9961
Combined correction factor (product)	1.0025	1.0056

7.7.8 Summary of Group 2 Corrections. The Group 2 correction curves in Figs. 7.5 through 7.9 with the corrected flow from para. 7.7.6 are used to determine the correction factors in Table 7.4. The correction factors are calculated using the factors from each graph and the following equations:

Heat rate at desired condition is found by multiplying the rated heat rate by

$$1 + \frac{\%\ \text{change in gross heat rate}}{100}$$

Kilowatt load is found in the same manner:

$$1 + \frac{\%\ \text{change in kW load}}{100}$$

The combined correction factor is the product of the individual correction factors.

7.8 CORRECTION OF LOAD, HEAT RATE AND COMPARISON TO GUARANTEE

7.8.1 Calculation of Corrected Heat Rate. The corrected heat rate is calculated by dividing the test heat rate by the combined correction factors for Group 1 (para. 7.7.5) and Group 2 (para. 7.7.6).

$$HR_c = HR_t/(CF_{Gr1} \times CF_{Gr2})$$
$$= 9{,}646/(0.9987 \times 1.0025)$$
$$HR_c = 9{,}634\ \text{Btu/kWhr}$$

7.8.2 Calculation of Corrected Load. Measured generator power is first corrected for any deviation in power factor or hydrogen pressure. No correction is needed because the test was conducted at the specified 0.90 power factor and 30 psig hydrogen pressure.

The corrected load is calculated by dividing the test load by the combined correction factors for Group 1 (para. 7.7.5) and Group 2 (para. 7.7.6).

$$kW_c = kW_t/(CF_{Gr1} \times CF_{Gr2})$$
$$= 28{,}150/(0.9974 \times 1.0056)$$
$$kW_c = 28{,}067\ \text{kW}$$

7.9 COMPARISON OF TEST TO GUARANTEE HEAT RATE AND OUTPUT

Figure 7.2 shows the heat rate plotted versus output. The manufacturer provided the guarantee curve with the guarantee point shown on Fig. 7.2, as noted. The test curve was drawn from a series of valve point tests with the corrected test heat rate from para. 7.8.1 and output from para. 7.8.2, as noted. The corresponding test heat rate is determined

Copyright ASME International
Provided by IHS under license with ASME
No reproduction or networking permitted without license from IHS
Not for Resale

from the test curve at the guaranteed output of 26,704 as noted in Fig. 7.2.

Guarantee heat rate	9,669 Btu/kWhr
Corresponding test heat rate [Note (1)]	9,587 Btu/kWhr
Difference (better)	82 Btu/kWhr
Guaranteed output	26,704 kW
Corrected test output	28,067 kW
Difference (better)	1,363 kW

NOTE:
(1) This value was derived from Fig. 7.2 at the specified test output of 26,704 kW.

7.10 TEST RESULT

The corrected test turbine heat rate was 82 Btu/kWhr better than guarantee. The corrected test output is 1,363 kW better than guarantee.

Copyright ASME International
Provided by IHS under license with ASME
No reproduction or networking permitted without license from IHS
Not for Resale

SECTION 8 — SAMPLE CALCULATION FOR A TEST OF A REHEAT-REGENERATIVE CYCLE TURBINE[1]

8.1 DESCRIPTION OF UNIT

The unit tested was a 500,000 kW reheat-regenerative cycle turbine with an auxiliary turbine for the feedwater pump drive and an extraction for station heating. Rated steam conditions were 2,400 psig, 1,000°F, and 1,000°F with 1.5 in. Hg absolute exhaust pressure. The generator was rated at 560,000 KVA, with 0.95 power factor, and 60 psig hydrogen pressure. There were seven stages of feedwater heating. All main turbine and auxiliary turbine glands were steam sealed. Performance was guaranteed on the basis of heat rate with feedwater heating cycle conditions and auxiliary turbine performance as specified in the contract. Excitation was supplied by a shaft-driven exciter. It was mutually agreed that the specified heat rates would be compared to the corresponding corrected test heat rates at the same kilowatt load on a locus curve drawn through the heat rate points.

8.2 DESCRIPTION OF TEST INSTRUMENTATION

8.2.1 Condensate flow was measured by means of a calibrated throat-tap nozzle located at the deaerator inlet. The No. 1 gland high pressure leakoff flow, No. 2 valve stem leakoff flow, and the leakoff to hot reheat were measured by means of an orifice. The leakoffs from the No. 1 and No. 3 glands to the steam seal regulator were measured with forward-reverse type pitot tubes. A pitot tube was also used to measure the leakoff from the steam seal regulator to the lowest pressure heater. Subatmospheric gland leakoff was measured with a water meter in the drain line from the gland seal condenser (GSC) to the main condenser. The No. 2 gland leakage flow to the reheat bowl was determined by calculations using the results of a special test.

Injection and leakoff flows from the feedwater pump glands were measured with orifices. The outboard gland leakages to atmosphere were measured with a bucket and stopwatch.

8.2.2 Steam pressures were read with high-accuracy calibrated transducers. Extraction steam pressures and temperatures were measured at the turbine flange and at the heaters, except for the lowest pressure heater, which was in the condenser neck.

8.2.3 All temperatures were measured by means of calibrated thermocouples with 32°F reference junctions.

8.2.4 Generator output was measured with three single-phase, integrating watthour meters.

8.3 SUMMARY OF TEST DATA

The data recorded during the test were averaged and corrected for instrument calibrations, water legs, zero corrections, barometric pressures, and ambient temperatures.

All test measurements, corrected for instrument calibration, have been summarized on the flow diagram shown in Fig. 8.1. Steam and water enthalpies derived from these data and the 1967 ASME Steam Tables have also been entered.

8.4 CALCULATION OF PERFORMANCE UNDER TEST OPERATING CONDITIONS

8.4.1 Calculation of Throttle Steam Flow. Condensate flow measurement at the deaerator inlet was 2,941,405 lbm/hr. The corresponding flow to the steam generator was determined as follows:

w_7 = extraction steam to No. 7 heater, lbm/hr
w_6 = extraction steam to No. 6 heater, lbm/hr
w_5 = extraction steam to No. 5 heater at turbine, lbm/hr
w_{hp} = No. 1 gland high pressure leakoff, lbm/hr

[1] This sample calculation is for a full-scale test of a reheat-regenerative cycle turbine. For a sample calculation of an alternative test of the same turbine, see Section 8A.

Copyright ASME International
Provided by IHS under license with ASME
No reproduction or networking permitted without license from IHS
Not for Resale

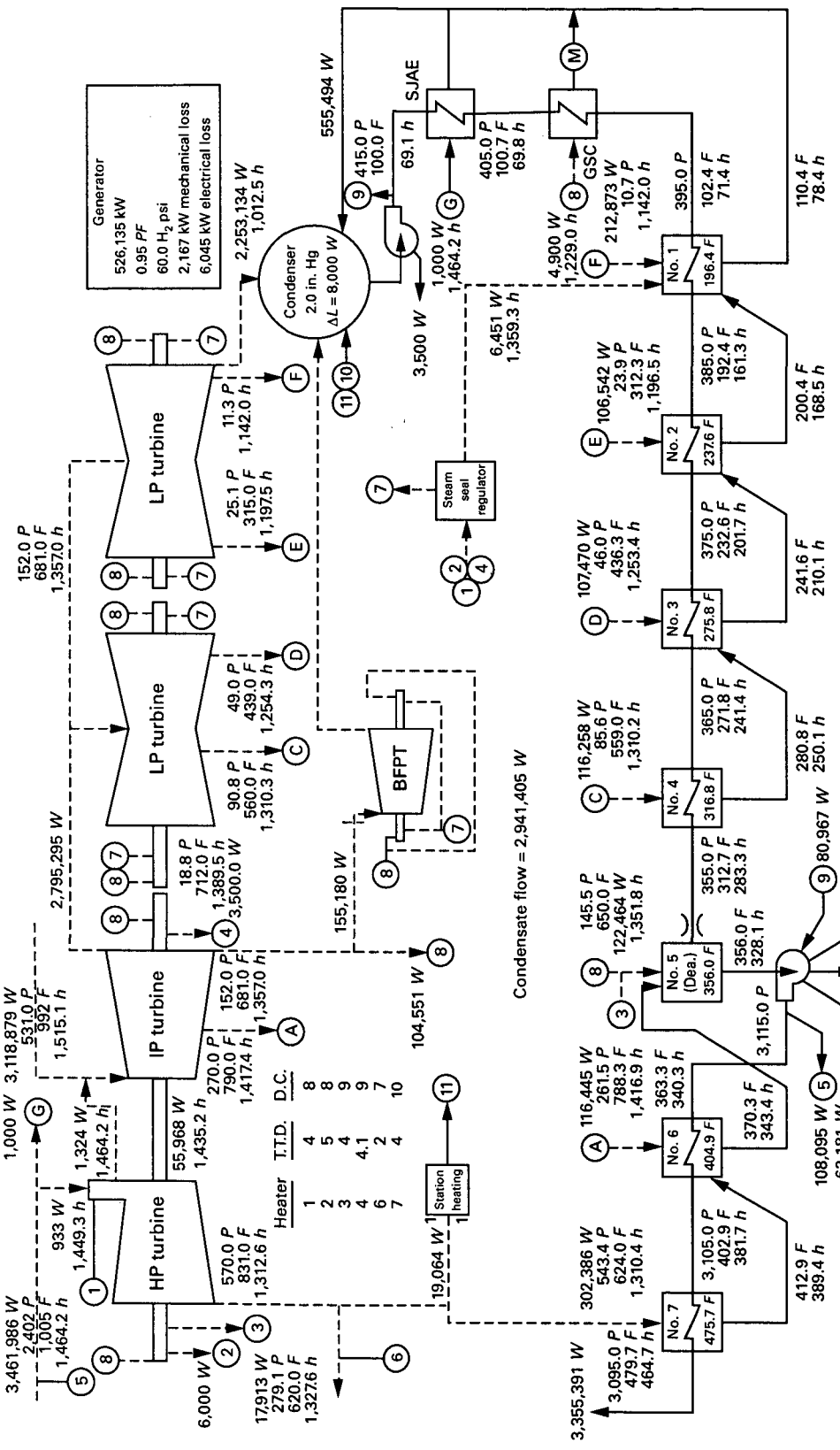

FIG. 8.1 TEST CYCLE

GENERAL NOTE: Refer to para. 8.6.

Copyright ASME International
Provided by IHS under license with ASME
No reproduction or networking permitted without license from IHS
Not for Resale

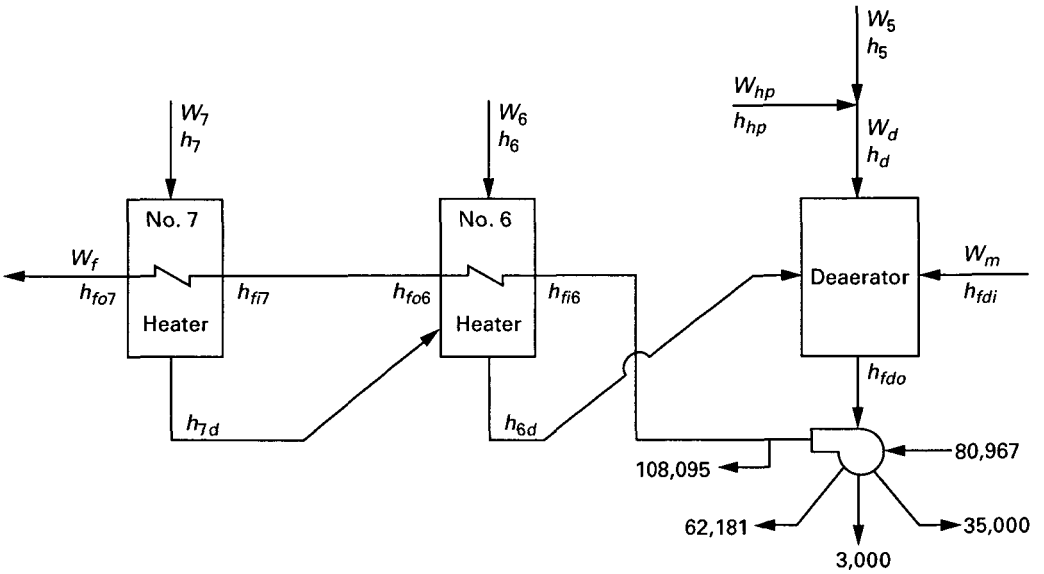

FIG. 8.2 EXTRACTION FLOWS TO HIGH PRESSURE HEATERS

w_d = inlet steam to No. 5 heater (deaerator) at heater, lbm/hr
w_f = final feedwater flow
w_m = measured condensate flow
w_{ds} = 0 = feedwater drawn from deaerator storage, lbm/hr
80,967 = feedwater pump seal injection, lbm/hr
35,000 = feedwater pump seal leakage, lbm/hr
3,000 = feedwater pump outboard leakage, lbm/hr
108,095 = throttle desuperheating flow, lbm/hr
62,181 = reheat desuperheating flow, lbm/hr

8.4.1.1 Extraction Flows to High Pressure Heaters. Refer to Fig. 8.2 for an illustration of extraction flows to high pressure heaters.

(a) Feedwater Flow to the Steam Generator

$$w_f = w_m + w_7 + w_6 + w_d - w_{ds} +$$
$$\sum \text{pump injection flows} -$$
$$\sum \text{pump leakage flows} -$$
$$\sum \text{desuperheating flows}$$
$$w_f = 2{,}941{,}405 + w_7 + w_6 + w_d - 0 + (80{,}967)$$
$$- (35{,}000 + 3{,}000)$$
$$- (108{,}095 + 62{,}181)$$
$$w_f = 2{,}814{,}096 + w_7 + w_6 + w_d$$

The flows w_7, w_6, and w_d are determined by heat balance around the top three heaters. W_{hp} was determined by measurement. Because feedwater flow through the heaters is not known, it is convenient to solve a set of simultaneous equations involving heat balances around each heater.

(b) Heat Balance Around the No. 7 Heater

$$w_f (h_{fo7} - h_{fi7}) = w_7 (h_7 - h_{7d})$$

$$(2{,}814{,}096 + w_7 + w_6 + w_d) (464.7 - 381.7) = w_7 (1{,}310.4 - 389.4)$$

$$838.0 (w_7) - 83.0 (w_6) - 83.0 (w_d) = 233{,}569{,}968 \text{ Btu/hr}$$

(c) Heat Balance Around the No. 6 Heater

$$w_f (h_{fo6} - h_{fi6}) = w_7 (h_{7d} - h_{6d}) + w_6 (h_6 - h_{6d})$$

$$(2{,}814{,}096 + w_7 + w_6 + w_d) (381.7 - 340.3) = w_7 (389.4 - 343.4) + w_6 (1{,}416.9 - 343.4)$$

$$4.6 (w_7) + 1{,}032.1 (w_6) - 41.4 (w_d) = 116{,}503{,}574 \text{ Btu/hr}$$

Copyright ASME International
Provided by IHS under license with ASME
No reproduction or networking permitted without license from IHS
Not for Resale

(d) Heat Balance Around the No. 5 Heater (Deaerator)

$$w_m (h_{fo} - h_{fdi}) = (w_7 + w_6)(h_{6d} - h_{fdo}) + w_d (h_d - h_{fdo})$$

$$2{,}941{,}405(328.1 - 283.3) = (w_7 + w_6)(343.4 - 328.1) + (1{,}351.8 - 328.1)(w_d)$$

$$15.3(w_7) + 15.3(w_6) + 1{,}023.7(w_d) = 131{,}744{,}944 \text{ Btu/hr}$$

The solution of these simultaneous equations gives the following results:

$$w_7 = 302{,}386 \text{ lbm/hr}$$

$$w_6 = 116{,}445 \text{ lbm/hr}$$

$$w_d = 122{,}464 \text{ lbm/hr}$$

$$w_5 = w_d - w_{hp}$$

$$w_5 = 122{,}464 - 17{,}913 = 104{,}551 \text{ lbm/hr}$$

Note that calculations must be carried to sufficient significant figures to ensure accuracy.

Final feedwater flow is

$$2{,}814{,}096 + w_7 + w_6 + w_d = 3{,}355{,}391 \text{ lbm/hr } (422.7793 \text{ kg/s})$$

8.4.1.1.1 Iterative Solution. The method of solving simultaneous equations can be time-consuming, especially if many high pressure heaters and test points are to be calculated. An alternate method is to employ an iterative solution.

A preliminary estimate of the final feedwater flow is required. This may be based on the relationship between deaerator inlet flow and final feedwater flow shown on the design heat balances. A close estimate is not necessary, because even a large error will be reduced in the first iteration. Using this procedure, first calculate all high pressure heater extraction flows based on the assumed feedwater flow. Then, using these extraction flows, calculate the flow entering the deaerator to compare to the measured flow. From the difference between these two flow values, calculate a new feedwater flow, which is then used to recalculate the extraction flows. This procedure is continued until the measured and calculated flows entering the deaerator reach the desired degree of convergence.

8.4.1.2 Unaccounted-For Change in Storage. The tightness of the system was checked by water mass balance. Any unaccounted-for losses from the system were assumed to have occurred in the steam generator.

Hotwell storage change (level fall)	−8,000 lbm/hr
Deaerator storage change	0 lbm/hr
Feedwater pump gland leakage	3,000 lbm/hr
Condensate pump gland leakage	3,500 lbm/hr
Unaccounted-for change in storage	−1,500 lbm/hr

8.4.1.3 Throttle Steam Flow. Throttle flow = feedwater flow + superheat attemperation flow + unaccounted for change in storage − steam flow to the air ejectors = 3,355,391 + 108,095 − 1,500 − 1,000 = 3,460,986 lbm/hr (197.5558 kg/s)

8.4.1.4 Check of Unaccounted-For Change in Storage. In para. 3.5.3 of the Code it is required that the leakage be less than 0.1% of test throttle flow at full load. Unaccounted-for change in storage, as a percentage of throttle flow, at full load = (1,500/3,460,986) × 100 = 0.043%. This is an acceptable quantity.

8.4.2 Extraction Flows to Low Pressure Heaters. Refer to Fig. 8.3 for an illustration of extraction flows to low pressure heaters.

(a) No. 4 Heater Extraction Flow, w_4

$$w_m (h_{fo4} - h_{fi4}) = w_4 (h_4 - h_{4d})$$

$$2{,}941{,}405 (283.3 - 241.4) = w_4 (1{,}310.2 - 250.1)$$

$$w_4 = 116{,}258 \text{ lbm/hr}$$

(b) No. 3 Heater Extraction Flow, w_3

$$w_m (h_{fo3} - h_{fi3}) = w_4 (h_{4d} - h_{3d}) + w_3 (h_3 - h_{3d})$$

$$2{,}941{,}405 (241.4 - 201.7) = 116{,}258 (250.1 - 210.1) + w_3 (1{,}253.4 - 210.1)$$

$$w_3 = 107{,}470 \text{ lbm/hr}$$

(c) No. 2 Heater Extraction Flow, w_2

$$w_m(h_{fo2} - h_{fi2}) = (w_3 + w_4)(h_{3d} - h_{2d}) + w_2(h_2 - h_{2d})$$

$$2{,}941{,}405 (201.7 - 161.3) = 223{,}728 (210.1 - 168.5) + w_2(1{,}196.5 - 168.5)$$

$$w_2 = 106{,}542 \text{ lbm/hr}$$

Copyright ASME International
Provided by IHS under license with ASME
No reproduction or networking permitted without license from IHS
Not for Resale

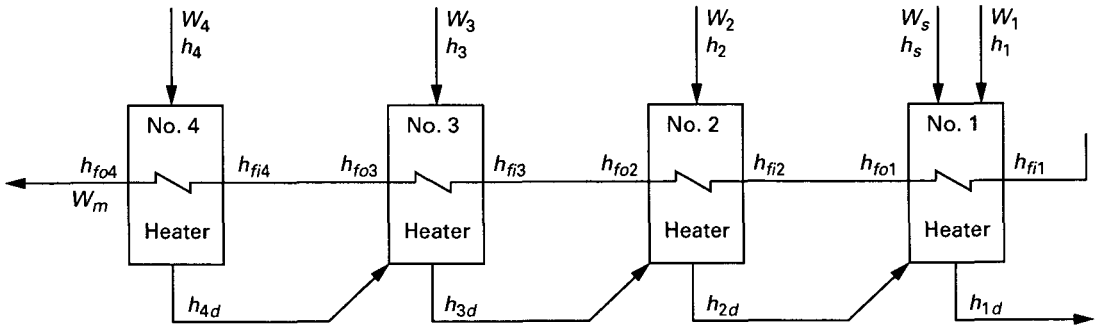

FIG. 8.3 EXTRACTION FLOWS TO LOW PRESSURE HEATERS

The extraction flow to the No. 1 heater has less than 27°F superheat; therefore, in accordance with para. 3.11.2 of the Code, its enthalpy could not be accurately determined from the steam tables by pressure and temperature measurements.

The enthalpy of this steam was estimated from an extrapolation of the test expansion line of the turbine as specified in para. 5.19 of the Code. Points representing steam conditions at the reheat bowl, and extractions to the No. 6, 5, 4, 3, and 2 heaters were plotted on a Mollier chart. An expansion line was drawn as a smooth curve similar to the expansion line furnished with the specified performance data supplied by the turbine-generator manufacturer using an estimated expansion-line end point (ELEP) (refer to Fig. 8.4).

The enthalpy of the extraction steam to the No. 1 heater was then estimated to be 1,142.0 Btu/lbm using the measured extraction pressure. A high degree of accuracy for this enthalpy is not required because an iterative solution is used. When the solution for the ELEP is obtained, it is compared to the estimated value used for the drawing of the expansion line. If the end points are within 0.1 Btu/lbm, the estimate is within acceptable limits. If the estimate is outside this limit, a new ELEP is assumed, a new expansion line is drawn, and the No. 1 heater enthalpy is re-estimated. The ELEP is recalculated until the desired convergence is obtained.

Measured flow from the steam seal regulator = 6,451 lbm/hr at 1,359.3 Btu/lbm.

(d) No. 1 Heater Extraction Flow, w_1

$$w_m (h_{fo1} - h_{fi1}) = (w_4 + w_2 + w_3)(h_{2d} - h_{1d}) + w_s (h_s - h_1) + w_1 (h_1 - h_{1d})$$

$$2{,}941{,}405\ (161.3 - 71.4) = 330{,}270\ (168.5 - 78.4) + 6{,}451\ (1{,}359.3 - 78.4) + w_1\ (1{,}142.0 - 78.4)$$

$$w_1 = 212{,}873 \text{ lbm/hr}$$

8.4.3 Miscellaneous Extractions. The steam flow to the feedwater pump drive turbine was measured with a calibrated orifice. The flow was 155,180 lbm/hr. The station heating steam flow from the cold reheat line was also measured with an orifice. The flow was 19,064 lbm/ hr, and for the test was returned to the condenser.

8.4.4 Reheat Steam Flow

8.4.4.1 Cold reheat steam flow

= Throttle flow – No. 2 valve stem leakoff flow – Leakoff flow to hot reheat – No. 1 gland high pressure leakoff flow – No. 1 gland low pressure leakoff flow – Steam flow to station heating – Extraction steam flow to No. 7 heater – No. 2 gland high pressure leakoff flow – Subatmospheric gland leakoff flow

= 3,460,986 – 933 – 1,324 – 17,913 – 6,000 – 19,064 – 302,386 – 55,968 – 700

= 3,056,698 lbm/hr (385.1439 kg/s)

8.4.4.2 Hot reheat steam flow

= Cold reheat flow + reheat spraywater flow

= 3,056,698 + 62,18

= 3,118,879 lbm/hr (392.9788 kg/s)

Copyright ASME International
Provided by IHS under license with ASME
No reproduction or networking permitted without license from IHS
Not for Resale

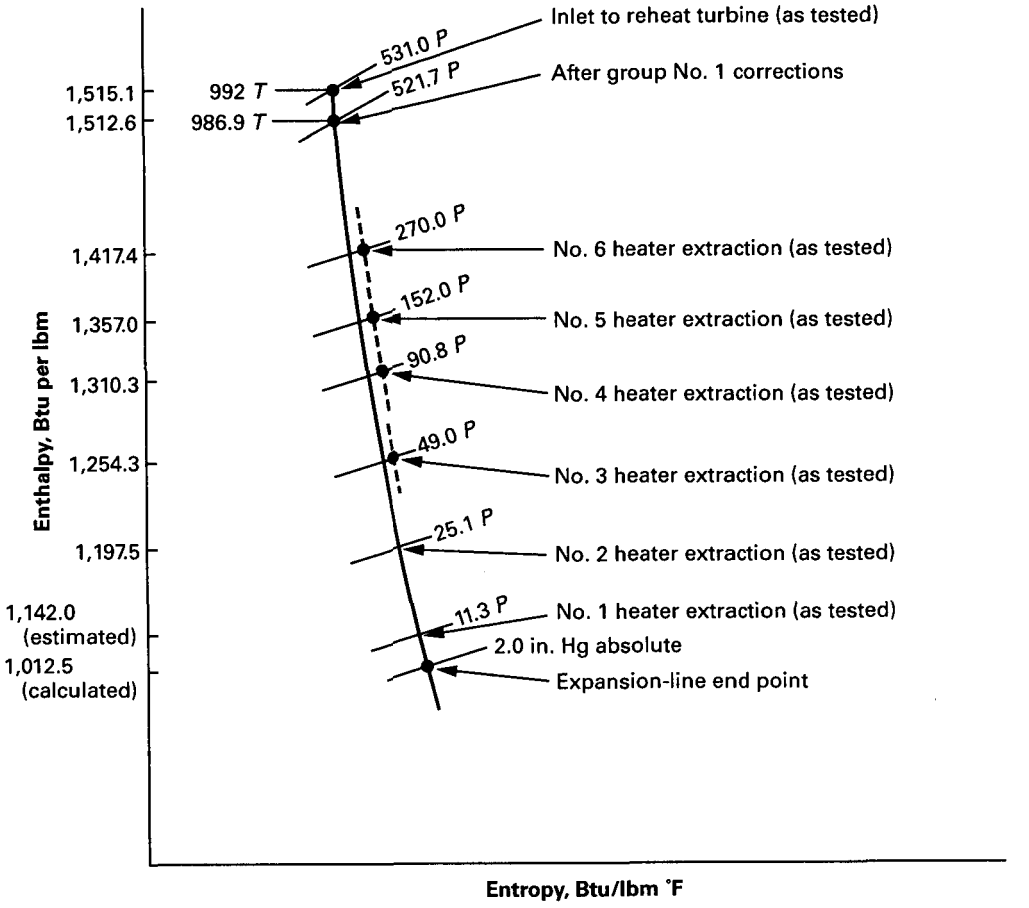

P = pressure, psia
T = temperature, °F

GENERAL NOTE: This diagram is not to scale. Changes in inlet steam conditions and deviations from the test expansion line are exaggerated for clarity. A smooth curve is drawn on a Mollier Diagram with enthalpy scale of 10 Btu/lb to the centimeter and entropy scale of 0.02 Btu/lb°F to the centimeter. Ship's curves such as K & E 864-31 or 864-41 or a 50-in. radius curve should be used. When extraction stage pressures are changed as a result of Group 1 corrections, revised steam conditions are read from the dotted lines drawn through the test points parallel to the expansion line.

FIG. 8.4 TURBINE EXPANSION LINE

Copyright ASME International
Provided by IHS under license with ASME
No reproduction or networking permitted without license from IHS
Not for Resale

8.4.4.3 Intermediate pressure turbine-inlet steam flow

= hot reheat steam flow + leakoff flow to hot reheat + No. 2 packing high pressure leakoff flow

= 3,118,879 + 1,324 + 55,968

= 3,176,171 lbm/hr (400.1975 kg/s)

8.4.5 Calculation of Expansion-Line End Point (ELEP). To calculate the expansion-line end point, it is necessary to sum all of the heat into and out of the turbine. This includes the heat equivalent of the electrical output and generator losses and turbine exhaust losses as heat out of the turbine (refer to Table 8.1).

Measured generator output	526,135 kW
Electrical losses (Fig. 8.5)	+6,045 kW
Fixed losses	+2,167 kW
Turbine shaft output	534,347 kW
Measured generator power factor	0.95
Measured generator hydrogen pressure	60 psig

$$\text{Used energy end point (UEEP)} = \frac{\text{Heat to condenser}}{\text{Flow to condenser}}$$

$$= \frac{2{,}320.4 \times 10^6 \text{ Btu/hr}}{2{,}253{,}134 \text{ lbm/hr}}$$

$$= 1{,}029.9 \text{ Btu/lbm}$$

The exhaust loss and expansion-line end point (ELEP) can now be calculated. This is an iterative procedure because moisture at the ELEP must be known to calculate exhaust loss. The extrapolation of the expansion line, based on the known steam conditions at the inlet to the reheat section and the extraction points, indicates an end point of 1,012.7 Btu/lbm.

Estimated ELEP = 1,012.7 Btu/lbm

Exhaust pressure = 2.0 in. Hg abs

Moisture, M = 0.089

$$\text{Specific volume, } v = vs\,(1 - M)$$

$$= 339.26\,(1 - 0.089)$$

$$= 309.07 \text{ ft}^3\text{/lbm}$$

where

vs = saturated dry specific volume at the actual back pressure

Annulus area, A = 206.4 ft^2

$$\text{Annulus velocity} = \frac{wv}{3600A}$$

$$= \frac{2{,}253{,}134\,(309.07)}{3600\,(206.4)}$$

$$= 937.21 \text{ ft/s}$$

Exhaust loss, EL (from Fig. 8.6), 21.9 Btu/lbm

$$\text{ELEP} = \text{UEEP} - 0.87\,(1 - \text{M})\,(\text{EL})$$

$$= 1{,}029.9 - 0.87\,(1 - 0.089)\,(21.9)$$

$$= 1{,}012.5 \text{ Btu/lbm}$$

The procedure is repeated, using the calculated ELEP as the estimated ELEP, until the estimated and calculated ELEP agree within 0.1 Btu/lbm.

ELEP = 1,012.5 Btu/lbm

8.4.6 Calculation of Overall Turbine Section Efficiencies. Initial and final steam conditions for the calculation of the overall turbine section efficiencies are now known. The calculated test efficiencies can then be compared to the values derived from the design heat balances and can be used to determine where the gains or deficiencies are.

(a) High Pressure Turbine Efficiency

$$\eta hp = \frac{hi - ho}{hi - hs}$$

$$= \frac{1{,}464.2 - 1{,}312.6}{1{,}464.2 - 1{,}288.1} \times 100$$

$$= 86.1\%$$

(b) Intermediate Pressure Turbine Efficiency

$$\eta ip = \frac{hi - ho}{hi - hs}$$

$$= \frac{1{,}515.1 - 1{,}357.0}{1{,}515.1 - 1{,}344.0} \times 100$$

$$= 92.4\%$$

Copyright ASME International
Provided by IHS under license with ASME
No reproduction or networking permitted without license from IHS
Not for Resale

TABLE 8.1
CALCULATION OF EXPANSION-LINE END POINT (ELEP)

Parameters	Flow, lbm/hr	Enthalpy, Btu/lbm	Heat Flow, 10^6 Btu/hr
Heat In			
Throttle	3,460,986	1,464.2	5,067.6
Hot reheat	3,118,879	1,515.1	4,725.4
Total			9,793.0
Heat Out			
No. 2 valve stem leakoff	933	1,449.3	1.3522
No. 1 gland high pressure leakoff	17,913	1,327.6	23.7813
No. 1 gland low pressure leakoff	6,000	1,327.6	7.9656
No. 1 gland subatmospheric leakoff	700	1,327.6	0.9293
Steam flow to station heating	19,064	1,312.6	25.0234
Extraction flow to No. 7 heater	302,386	1,312.6	396.9117
Extraction flow to No. 6 heater	116,445	1,417.4	165.0491
Steam flow to feedwater pump drive turbine	155,180	1,357.0	210.5793
Extraction flow to No. 5 heater	104,551	1,357.0	141.8757
No. 3 gland low pressure leakoff	3,500	1,389.5	4.8633
No. 3 gland subatmospheric leakoff	700	1,389.5	0.9727
Cold reheat flow	3,056,698	1,312.6	4,012.2218
Extraction flow to No. 4 heater	116,258	1,310.3	152.3329
Extraction flow to No. 3 heater	107,470	1,254.3	134.7996
Extraction flow to No. 2 heater	106,542	1,197.5	127.5840
Extraction flow to No. 1 heater	212,873	1,142.0	243.1010
Shaft output	534,347 kW x 3,412.142 Btu/kWhr =		1,823.2668
Total			7,472.6097

GENERAL NOTES:

(a) Heat to condenser = heat to turbine cycle − turbine shaft output − heat in steam leaving the cycle
= 9,793.0 × 10^6 − 7,472.6 × 10^6
= 2,320.4 × 10^6 Btu/hr (2,448.4 × 10^6 kJ/h)

(b) Flow to the condenser = intermediate pressure turbine inlet steam flow − $\sum_{n=1}^{6}$ Heater n extraction steam flow − feedpump turbine driver steam flow − No. 3 gland high-pressure leakoff flow − No. 3 gland low pressure leakoff flow + low pressure turbine seal flow
= 3,176,171 − (116,445 + 104,551 + 116,258 + 107,470 + 106,542 + 212,873) − 155,180 − 3,500 − 700 + 482
= 2,253,134 lbm/hr (283.8949 kg/s)

Copyright ASME International
Provided by IHS under license with ASME
No reproduction or networking permitted without license from IHS
Not for Resale

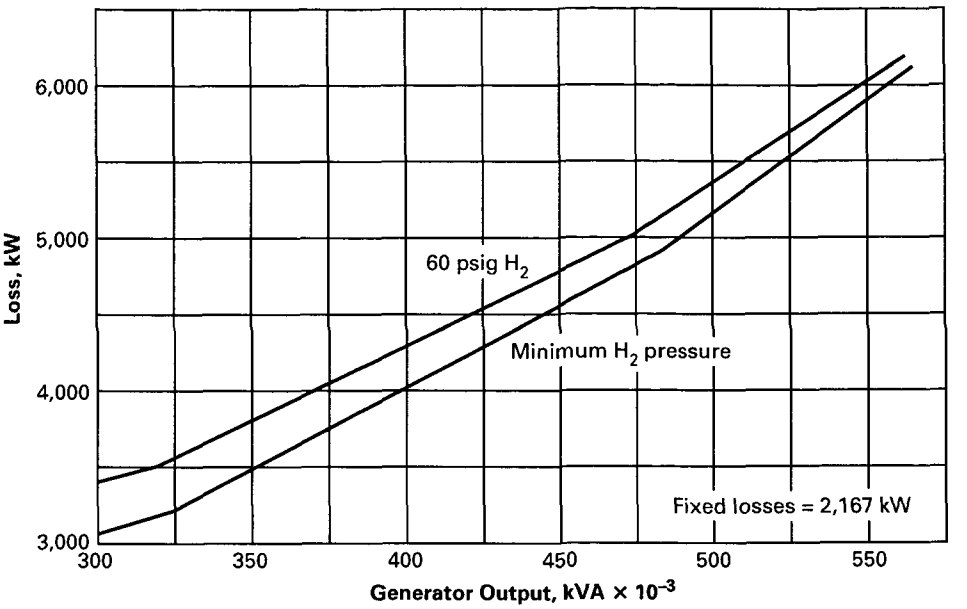

FIG. 8.5 GENERATOR LOSSES

(c) *Low Pressure Turbine Efficiency*

$$\eta lp = \frac{hi - ho}{hi - hs}$$

(1) *To (UEEP)*

$$= \frac{1{,}357.0 - 1{,}029.9}{1{,}357.0 - 970.0} \times 100 = 84.5\%$$

(2) *To (ELEP)*

$$= \frac{1{,}357.0 - 1{,}012.5}{1{,}357.0 - 970.0} \times 100 = 89.0\%$$

Valve stem leakoff flows and gland leakages into turbine sections further along the flow path can have some effect on the overall section efficiency. For example, the intermediate pressure turbine actually has a mixture of steam to its first stage with a steam enthalpy of 1,513.7 Btu/lbm. The actual section efficiency is

$$\eta ip = \frac{1{,}513.7 - 1{,}357.0}{1{,}513.7 - 1{,}343.4} \times 100 = 92.0\%$$

8.4.7 Calculation of Test Cycle Heat Rate. The basic definition of heat rate, which is used to formulate gross and net heat rates, is stated in para. 5.7.1 of the Code as

heat rate = (heat supplied − heat returned)/(output)

(a) Gross heat rate (GHR) for cycles using
(1) *Motor-Driven Feed Pump*

GHR = heat input/generator output

(2) *Shaft-Driven Feed Pump*

GHR = heat input/(generator output + power to pump coupling)

Copyright ASME International
Provided by IHS under license with ASME
No reproduction or networking permitted without license from IHS
Not for Resale

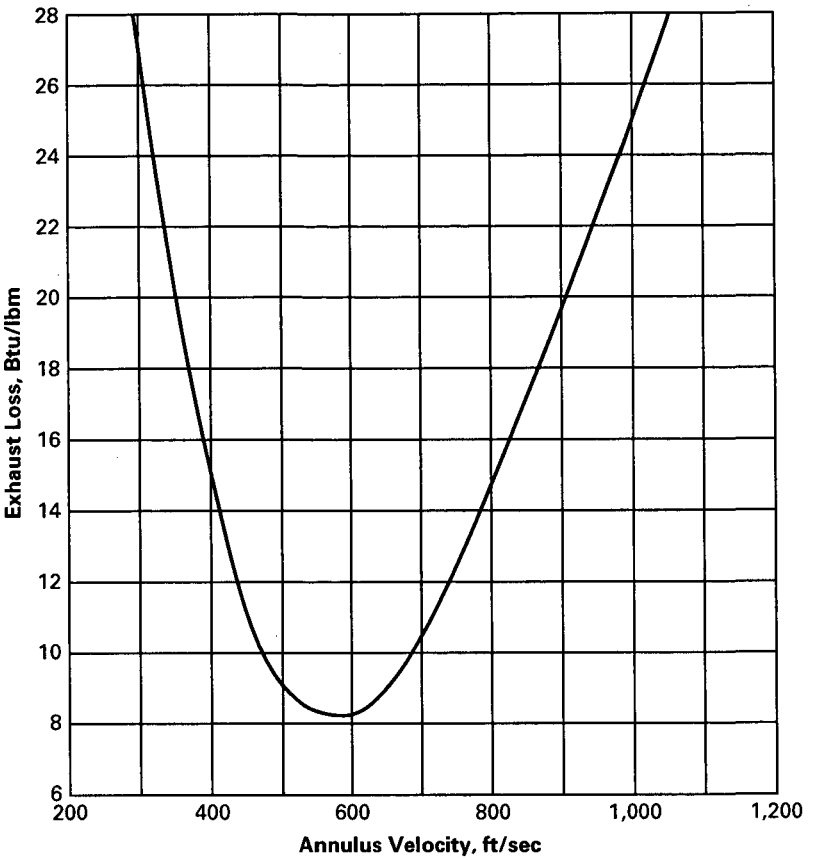

FIG. 8.6 EXHAUST LOSSES

(3) Turbine-Driven Feed Pump

GHR = heat input/(generator output + auxiliary turbine output)

(b) Net heat rate (NHR) for cycles using
(1) Motor-Driven Feed Pump

NHR = heat input/(generator output − power to motor)

(2) Shaft-Driven or Turbine-Driven Feed Pump

NHR = heat input/generator output

Turbine gross or net heat rates can be used. For comparing test results to specified results, the test heat rate must be the one defined in the specified heat balance. Gross heat rates at the same output do not illustrate the differences in performance resulting from variations in pumping power. Because different steam flow rates affect pumping power, turbine performance can best be described by net heat rate.

The heat input to the cycle is defined as

$$w_t\,(h_t - h_{tw}) + w_r\,(h_{hrh} - h_{crh})$$

where

w_t = throttle flow (lbm/hr)
w_r = reheat flow (lbm/hr)
h_t = throttle enthalpy (Btu/lbm)
h_{fw} = final feedwater enthalpy (Btu/lbm)
h_{hrh} = enthalpy leaving reheater (Btu/lbm)
h_{crh} = enthalpy entering reheater (Btu/lbm)

The heat input may be modified to include heat added by the feed pump, flow to the steam jet air ejector (SJAE), or various other flows. It is important for all heat inputs or losses which are charged to the turbine cycle to be completely specified. The

Copyright ASME International
Provided by IHS under license with ASME
No reproduction or networking permitted without license from IHS
Not for Resale

net heat rate as specified for the test turbine cycle in this example is

$$HR = \frac{(w_t - w_{shs})(h_t - h_{fo7}) + w_{shs}(h_t - h_{fi6}) + (w_r - w_{rhs})(h_{hrh} - h_{crh}) + w_{rhs}(h_{hrh} - h_{rhs})}{\text{generator output}}$$

where

W_{shs} = superheat spraywater
W_{rhs} = reheat spraywater
H_{fo7} = enthalpy leaving No. 7 heater
H_{fi6} = enthalpy entering No. 6 heater
H_{rhs} = enthalpy of reheat spraywater

$$HR = \frac{(3{,}460{,}986 - 108{,}095)(1{,}464.2 - 464.7) + (108{,}095)(1{,}464.2 - 340.3) + (3{,}118{,}879 - 62{,}181)(1{,}515.1 - 1{,}312.6) + (62{,}181)(1{,}515.1 - 334.2)}{526{,}135}$$

= 7,916 Btu/kWhr (8,352 kJ/kWh)

8.5 CORRECTION OF TEST PERFORMANCE TO SPECIFIED OPERATING CONDITIONS

8.5.1 Group 1 Corrections. Performance is first corrected for the effect of the Group 1 variables, described in para. 5.8.2 of the Code and outlined in para. 5.11. The variables primarily affect the feedwater heating system. Corrections for generator operating conditions are conveniently made at this time. Test characteristics for the turbine, such as turbine efficiencies, packing flows, and stage flow functions, are maintained.

The first step is to calculate the extraction steam flows that would exist with the specified heater terminal temperature differences and extraction line pressure drops. Other specified operating conditions also introduced at this time are

(a) Throttle flow equals the test throttle flow

(b) Feedwater flow leaving the highest pressure feedwater heater equal to the test turbine flow plus the specified air ejector steam flow (1,000 lbm/hr)

(c) No change in water storage at any point in the cycle

(d) No spraywater

(e) No make-up

(f) No heat loss from extraction steam lines

(g) Specified feedwater enthalpy rise across the feedwater pumps

(h) Enthalpy of feedwater to the lowest pressure feedwater heater corresponding to that of saturated water at the test exhaust pressure of 2.0 in. Hg absolute

If sufficiently large, extraction steam flows may cause corresponding changes in the extraction pressures, necessitating an iterative calculation of the corrected extraction steam flows. As a first approximation, new extraction flows were calculated, using test extraction pressures and specified values of extraction-line pressure drop.

All flows into and out of the turbine were previously calculated or are the same as measured. The flows through the stages of the turbine can now be calculated.

The ratio of steam flow to the following stage, w_{fs} to $(p/v)^{0.5}$, referred to in para. 5.2(d) of the Code, for small changes in pressure and with constant temperature, may be reduced to w/p. This relationship is calculated for the test cycle at each turbine extraction stage.

Heat balance around the steam seal regulator is

$$10{,}433x = 933\,(1{,}449.3) + 6{,}000\,(1{,}327.6) + 3{,}500\,(1{,}389.5)$$
$$x = 1{,}359.3 \text{ Btu/lbm}$$

Measured drain flow from the gland steam condenser was 4,900 lbm/hr. This flow was allocated as to source as follows: 700 lbm/hr from each of six turbine glands plus 700 lbm/hr from the feedwater pump turbine glands. The spillover of gland steam to the No. 1 heater was measured to be 6,451 lbm/hr. The flow of gland steam from the steam seal regulator to the low pressure turbine glands is 10,433 − 6,451 or 3,982 lbm/hr. By difference (3,982 − 3,500) a flow of 482 lbm/hr from the low pressure glands into the condenser is determined.

Assuming saturation temperature at the deaerator and specified terminal differences and drain cooler approach temperature, calculate high pressure heater conditions. The heat balance diagram is shown in Fig. 8.7.

8.5.1.1 First Approximation (Refer to Fig. 8.7)

8.5.1.1.1 Extraction Steam Flow Calculations

(a) No. 7 Heater

$$w_f(h_{fo7} - h_{fi7}) = w_7(h_7 - h_{7d})$$

$$3{,}461{,}986\,(4{,}63.4 - 381.0) = w_7(1{,}312.6 - 388.7)$$

$$w_7 = 308{,}765 \text{ lbm/hr}$$

Copyright ASME International
Provided by IHS under license with ASME
No reproduction or networking permitted without license from IHS
Not for Resale

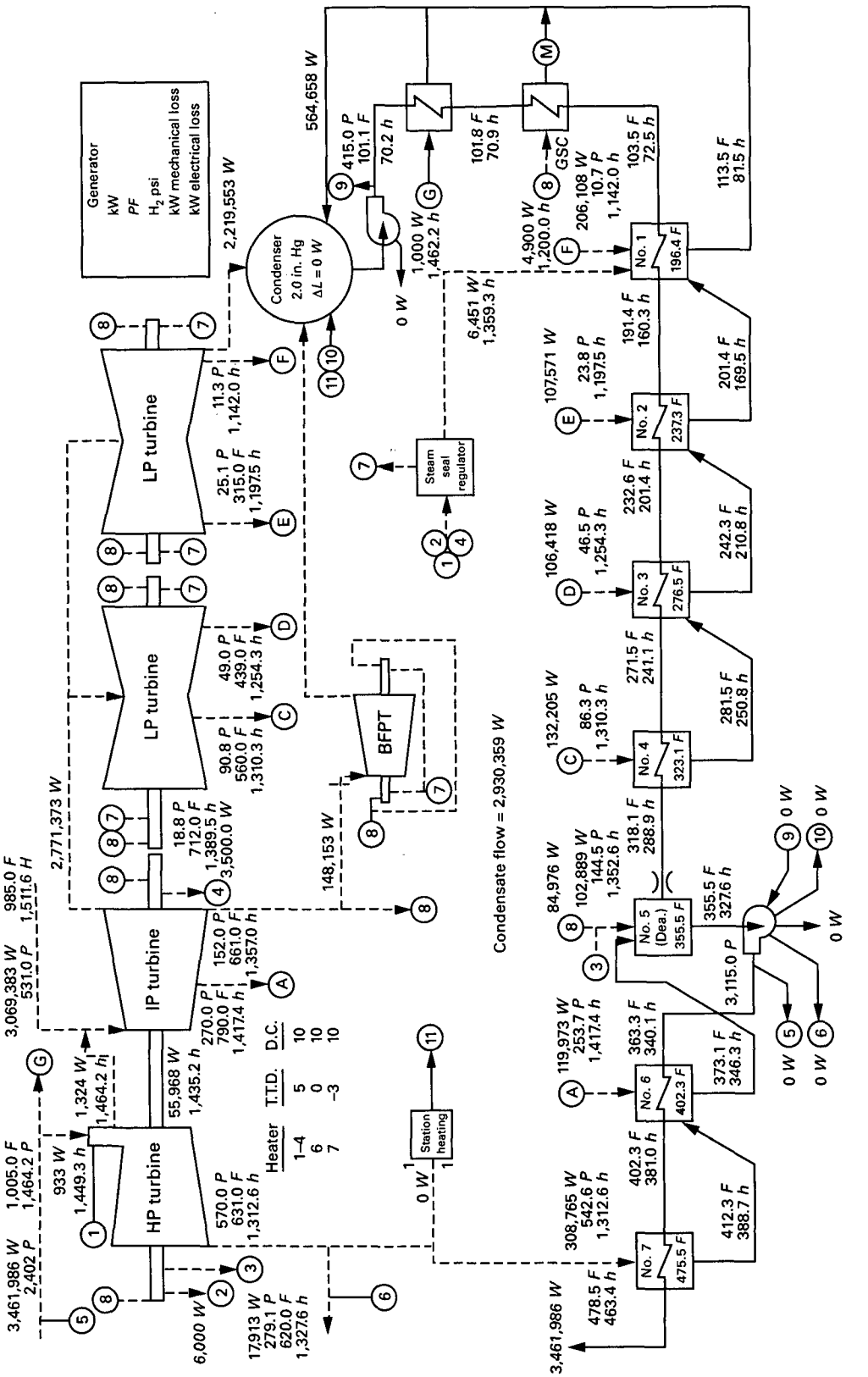

GENERAL NOTE: Refer to para. 8.6.

FIG. 8.7 FIRST APPROXIMATION (TEST TURBINE IN SPECIFIED CYCLE)

Copyright ASME International
Provided by IHS under license with ASME
No reproduction or networking permitted without license from IHS
Not for Resale

(b) No. 6 Heater

$w_f (h_{fo6} - h_{fi6}) = w_7 (h_{7d} - h_{6d}) + w_6 (h_6 - h_{6d})$

3,461,986 (381.0 − 340.1) = 308,765 (388.7 − 346.3) + w_6 (1,417.4 − 346.3)

w_6 = 119,973 lbm/hr

(c) No. 5 Heater (Deaerator)

$W_f (h_{fdo} - h_{fo4}) = (w_7 + w_6) (h_{6d} - h_{fo4}) + w_{hp} (h_{hp} - h_{fo4}) + w_5 (h_5 - h_{fo4})$

3461,986 (327.6 − 288.9) = (308,765 + 119,973) (346.3 − 288.9) + 17,913 (1,327.6 − 288.9) + w_5 (1,357.0 − 288.9)

w_5 = 84,976 lbm/hr

Steam flow required to pump 3,461,986 lbm/hr feedwater flow:

$$\frac{\text{(Contract } \Delta h\text{)(feedwater flow)}}{\text{[(feedwater pump turbine efficiency)} \times \text{(available steam energy)]}}$$

Assume that the exhaust pressure is 2.5 in. Hg absolute.

$$\frac{12.5\ (3{,}461{,}986)}{0.79(1{,}375.0\text{-}982.2)}$$

= 146,153 lbm/ hr

(d) No. 4 Heater

$W_m (h_{fo4} - h_{fi4}) = w_4 (h_4 - h_{4d})$

2,930,359 (288.9 − 241.1) = w_4 (1,310.3 − 250.8)

w_4 = 132,205 lbm/hr

(e) No. 3 Heater

$W_m (h_{fo3} - h_{fi3}) = w_4 (h_{4d} - h_{3d}) + w_3 (h_3 - h_{3d})$

2,930,359 (241.1 − 201.4) = 132,205 (250.8 − 210.8) + w_3 (1,254.3 − 210.8)

w_3 = 106,418 lbm/hr

(f) No. 2 Heater

$w_m (h_{fo2} - h_{fi2}) = (w_4 + w_3) (h_{3d} - h_{2d}) + w_2 (h_2 - h_{2d})$

2,930,359 (201.4 − 160.3) = (132,205 + 106,418) (210.8 − 169.5) + w_2 (1,197.5 − 169.5)

w_2 = 107,571 lbm/hr

(g) No. 1 Heater

$w_m (h_{fo1} - h_{fi1}) = (w_4 + w_3 + w_2) (h_{2d} - h_{1d}) + w_s (h_s - h_{1d}) + w_1 (h_1 - h_{1d})$

2,930,359 (160.3 − 72.5) = (132,205 + 106,418 + 107,571) × (169.5 − 81.5) + 6,451 (1,359.3− 81.5) + w_1 (1,142.0 − 81.5)

w_1 = 206,108 lbm/hr

8.5.1.1.2 Steam flows through the stages of the turbine (for the first iteration) are presented in Table 8.2. Test relationships are shown in Table 8.3.

Using the test flow/pressure relationships and the calculated flow to the following stage at each extraction point, revised extraction pressures are calculated as $w_1(w/p)$. Refer to Table 8.4.

The revised extraction pressures are used in the second approximation. Steam enthalpies corresponding to the revised extraction pressures are determined from the plot of the turbine expansion line, and new extraction flows and pressures are then calculated (refer to Fig. 8.4).

Some scattering of the points representing steam conditions at the extraction stages is likely and the points may not fall exactly on the test expansion line. Enthalpies should be assumed to vary along a line parallel to the test expansion line, but passing through the point representing steam conditions as actually measured. This process must be repeated until the change for two successive iterations in extraction pressure is less than 1.0% or 1.0 psi, whichever is smaller, on all heaters.

In accordance with para. 5.12.1 of the Code, the high pressure turbine exhaust pressure is maintained at the test value. This, in effect, changes the reheater pressure drop. This change is compensated for by

Copyright ASME International
Provided by IHS under license with ASME
No reproduction or networking permitted without license from IHS
Not for Resale

TABLE 8.2
STEAM FLOWS THROUGH THE STAGES OF THE TURBINE IN THE FIRST APPROXIMATION (FOR THE FIRST ITERATION)

Stage	Flow, lbm/hr
Throttle flow	3,460,986
No. 2 valve stem leakoff	−933
Leakoff flow to hot reheat	−1,324
No. 2 gland high pressure leakoff flow	−55,968
First-stage steam flow	3,402,761
No. 1 gland high pressure leakoff flow	−17,913
No. 1 gland low pressure leakoff flow	−6,000
No. 1 gland subatmospheric leakoff flow	−700
Steam flow leaving high pressure turbine	3,378,148
No. 7 heater extraction steam flow	−308,765
Cold reheat steam flow	3,069,383
Hot reheat steam flow	3,069,383
Leakoff flow to hot reheat	+1,324
No. 2 gland high pressure leakoff flow	+55,968
Steam flow at intermediate pressure turbine inlet	3,126,675
No. 6 heater extraction steam flow	−119,973
Steam flow following extraction	3,006,702
No. 5 heater extraction steam flow	−84,976
Feedwater pump turbine extraction steam flow	−146,153
No. 3 gland low pressure leakoff flow	−3,500
No. 3 gland subatmospheric leakoff flow	−700
Crossover steam flow	2,771,373
No. 4 heater extraction steam flow	−132,205
Steam flow following extraction	2,639,168
No. 3 heater extraction steam flow	−106,418
Steam flow following extraction	2,532,750
No. 2 heater extraction steam flow	−107,571
Steam flow following extraction	2,425,179
No. 1 heater extraction steam flow	−206,108
Steam flow following extraction	2,219,071
Flow from steam seals	+482
Steam flow to condenser	2,219,553

the reheater pressure drop correction factor corresponding to the revised value of reheater pressure drop rather than to the original test value. Therefore, corrections to the high pressure turbine efficiency for the effect of changes in high pressure turbine exhaust pressure are avoided.

8.5.1.2 Second Approximation (Refer to Fig. 8.8)

8.5.1.2.1 Extraction Steam Flow Calculation

(a) No. 7 Heater

$$w_f (h_{fo7} - h_{fi7}) = w_7 (h_7 - h_{7d})$$

$$3{,}461{,}986\ (463.4 - 379.4) = w_7\ (1{,}312.6 - 387.0)$$

$$w_7 = 314{,}182\ \text{lbm/hr}$$

(b) No. 6 Heater

$$w_f (h_{fo6} - h_{fi6}) = w_7 (h_{7d} - h_{6d}) + w_6 (h_6 - h_{6d})$$

$$3{,}461{,}986\ (379.4 - 339.3) = 314{,}182\ (387.0 - 345.6) + w_6\ (1{,}414.1 - 345.6)$$

$$w_6 = 117{,}752\ \text{lbm/hr}$$

(c) No. 5 Heater

$$w_f (h_{fo6} - h_{fi6}) = (w_7 + w_6) (h_{6d} - h_{fo4}) + w_{hp} (h_{hp} - h_{fo4}) + w_s (h_5 - h_{fo4})$$

$$3{,}461{,}986\ (326.8 - 281.7) = (314{,}182 + 117{,}752)\ (345.6 - 281.7) + 17{,}913\ (1{,}327.6 - 281.7) + w_5\ (1{,}354.7 - 281.7)$$

$$w_s = 102{,}330\ \text{lbm/hr}$$

Copyright ASME International
Provided by IHS under license with ASME
No reproduction or networking permitted without license from IHS
Not for Resale

TABLE 8.3
TEST RELATIONSHIPS

Stage	w-lbm/hr	p-psia	w/p
Throttle flow	3,460,986	...	...
No. 2 valve stem leakoff flow	−933	...	...
Leakoff flow to hot reheat	−1,324	...	...
No. 2 gland high pressure leakoff flow	−55,968	...	...
First-stage steam flow	3,402,761	...	...
No. 1 gland high pressure leakoff flow	−17,913	...	...
No. 1 gland low pressure leakoff flow	−6,000	...	...
No. 1 gland subatmospheric leakoff flow	−700	...	...
Steam flow leaving high pressure turbine	3,378,148	570.0	5,926.6
Station heating steam flow	−19,064	...	...
No. 7 heater extraction steam flow	−302,386	...	...
Cold reheat steam flow	3,056,698	...	...
Desuperheating water flow	+62,181	...	...
Hot reheat steam flow	3,118,879	531.0	5,873.6
Leakoff flow to hot reheat	+1,324	...	...
No. 2 gland high pressure leakoff flow	+55,968	...	...
Steam flow at intermediate pressure turbine inlet	3,176,171	...	...
No. 6 heat extraction steam flow	−116,445	...	...
Steam flow following extraction	3,059,726	270.0	11,332.3
No. 5 heater extraction steam flow	−104,551	...	...
Feedwater pump turbine extraction steam flow	−155,180	...	...
No. 3 gland low pressure leakoff flow	−3,500	...	...
No. 3 gland subatmospheric leakoff flow	−700	...	...
Crossover steam flow	2,795,795	152.0	18,393.4
No. 4 heater extraction steam flow	−116,258	...	...
Steam flow following extraction	2,679,537	90.8	29,510.3
No. 3 heater extraction steam flow	−107,470	...	...
Steam flow following extraction	2,572,067	49.0	52,491.2
No. 2 heater extraction steam flow	−106,542	...	...
Steam flow following extraction	2,465,525	25.1	98,228.1
No. 1 heater extraction steam flow	−212,873	...	...
Steam flow following extraction	2,252,652	11.3	199,349.7
Flow from steam seals	+482	...	...
Steam flow to condenser	2,253,134	...	...

Copyright ASME International
Provided by IHS under license with ASME
No reproduction or networking permitted without license from IHS
Not for Resale

TABLE 8.4
REVISED EXTRACTION PRESSURES: FIRST APPROXIMATION

Stage	w-lbm/hr	*w/p*	*p*-psia	%*p* change
Hot reheat inlet steam flow	3,069,383	5,873.6	522.6	1.6
Steam flow following No. 6 heater extraction	3,006,702	11,332.3	265.3	1.7
Crossover steam flow	2,771,373	18,393.4	150.7	0.9
Steam flow following No. 4 heater extraction	2,639,168	29,510.3	89.4	1.5
Steam flow following No. 3 heater extraction	2,532,750	52,491.2	48.3	1.4
Steam flow following No. 2 heater extraction	2,425,179	98,228.1	24.7	1.6
Steam flow following No. 1 heater extraction	2,219,071	199,349.7	11.1	1.8

Steam flow required to pump 3,461,986 lbm/hr feedwater flow:

$$\frac{12.5\ (3{,}461{,}986)}{0.79\ (1{,}354.7 - 982.2)}$$

$$= 146{,}153 \text{ lbm/hr}$$

(d) No. 4 Heater

$$w_m\ (h_{fo4} - h_{fi4}) = w_4\ (h_4 - h_{4d})$$

$$2{,}909{,}809\ (281.7 - 240.1) = w_4\ (1{,}308.0 - 249.8)$$

$$w_4 = 114{,}391 \text{ lbm/hr}$$

(e) No. 3 Heater

$$w_m\ (h_{fo3} - h_{fi3}) = w_3\ (h_3 - h_{3d}) + w_4\ (h_{4d} - h_{3d})$$

$$2{,}909{,}809\ (240.1 - 200.5) = w_3\ (1{,}253.9 - 209.9) + 114{,}391\ (249.8 - 209.9)$$

$$w_3 = 106{,}000 \text{ lbm/hr}$$

(f) No. 2 Heater

$$w_m\ (h_{fo2} - h_{fi2}) = w_2\ (h_2 - h_{2d}) + (w_4 + w_3)\ (h_{3d} - h_{2d})$$

$$2{,}909{,}809\ (200.5 - 159.4) = w_2\ (1{,}197.2 - 168.6) + (114{,}391 + 106{,}000)\ (209.9 - 168.6)$$

$$w_2 = 107{,}419 \text{ lbm/hr}$$

(g) No. 1 Heater

$$w_m\ (h_{fo1} - h_{fi1}) = w_1\ (h_1 - h_{1d}) + (w_4 + w_3 + w_2)\ (h_{2d} - h_{1d}) + w_s\ (h_s - h_{1d})$$

$$2{,}909{,}809\ (159.4 - 72.5) = w_1\ (1{,}140.2 - 81.5) + (220{,}391 + 107{,}419)\ (168.6 - 81.5) + 6{,}451\ (1{,}359.3 - 81.5)$$

$$w_1 = 204{,}087 \text{ lbm/hr}$$

8.5.1.2.2 Steam flows through the stages of the turbine (for the first iteration) are presented in Table 8.5.

Using the test flow/pressure relationships and the calculated flow to the following stage at each extraction point, revised extraction pressures are calculated as $w_1(w/p)$. Refer to Table 8.6.

Pressures are within 1.0% of the previous iteration, illustrating that they are close enough to the test pressure/flow curve.

The change in steam flow to the reheat turbine causes a corresponding change in pressure at the inlet to the reheat turbine. New values of steam temperature and enthalpy must be determined from the test expansion line at the revised pressure.

Test pressure	531.0	psia
Test steam flow to the reheat turbine	3,118,879	lbm/hr
Revised steam flow to the reheat turbine	3,063,966	lbm/hr
Revised pressure	$\frac{531.0 \times 3{,}063{,}966}{3{,}118{,}879}$	
	= 521.7	psia
Revised temperature	986.9	°F
Revised enthalpy	1,512.6	Btu/lbm

Because exhaust loss varies with the exhaust flow, a revised value of the exhaust steam enthalpy must be determined.

Copyright ASME International
Provided by IHS under license with ASME
No reproduction or networking permitted without license from IHS
Not for Resale

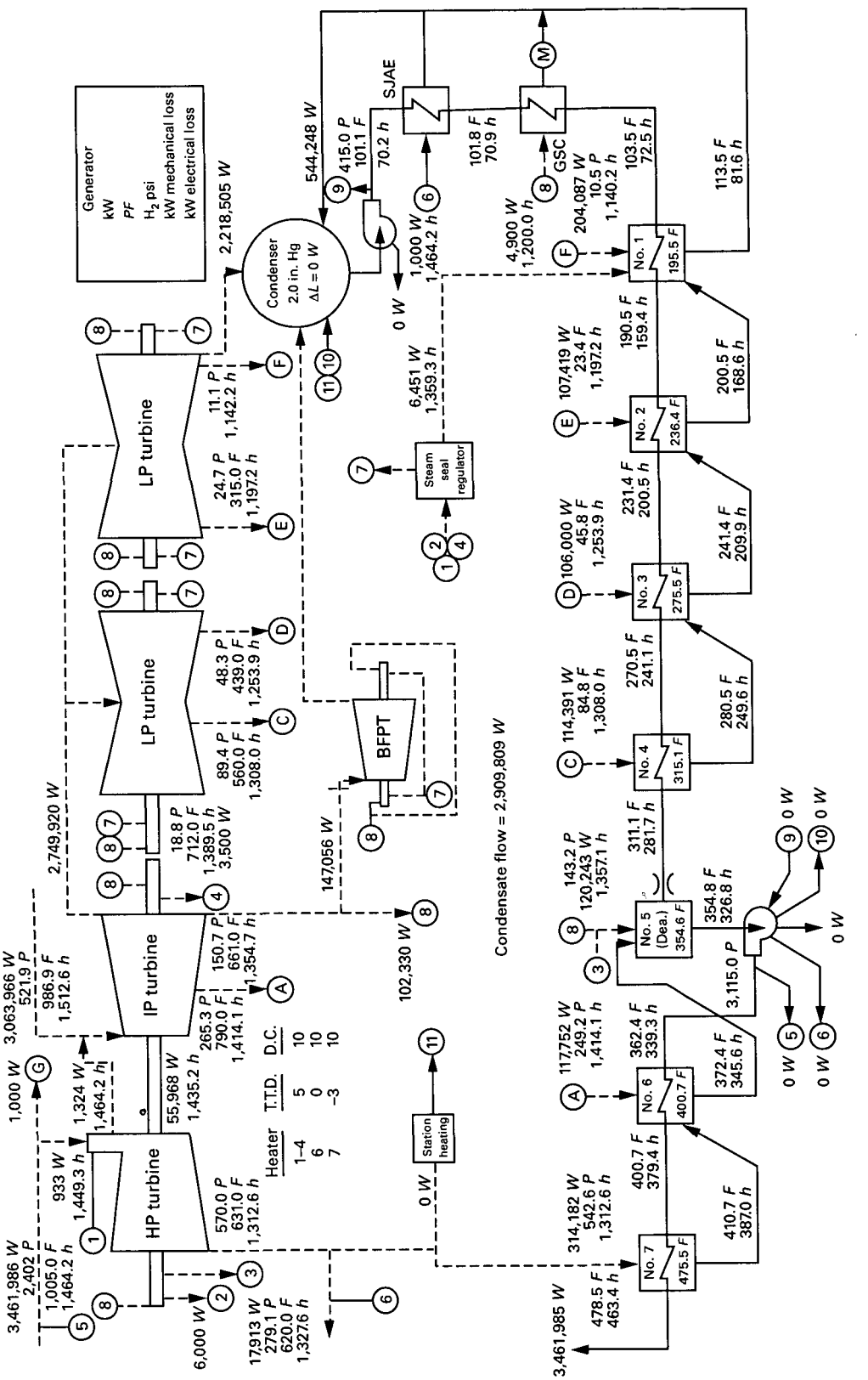

FIG. 8.8 SECOND APPROXIMATION (TEST TURBINE IN SPECIFIED CYCLE)

Copyright ASME International
Provided by IHS under license with ASME
No reproduction or networking permitted without license from IHS
Not for Resale

TABLE 8.5
STEAM FLOWS THROUGH THE STAGES OF THE TURBINE IN THE SECOND APPROXIMATION (FOR THE FIRST ITERATION)

Stage	Flow, lbm/hr
Throttle flow	3,460,986
No. 2 valve stem leakoff	−933
Leakoff flow to hot reheat	−1,324
No. 2 gland high pressure leakoff flow	−55,968
First-stage steam flow	3,402,761
No. 1 gland high pressure leakoff flow	−17,913
No. 1 gland low pressure leakoff flow	−6,000
No. 1 gland subatmospheric leakoff flow	−700
Steam flow leaving high pressure turbine	3,378,148
No. 7 heater extraction steam flow	−314,182
Cold reheat steam flow	3,063,966
Hot reheat steam flow	3,063,966
Leakoff flow to hot reheat	+1,324
No. 2 gland high pressure leakoff flow	+55,968
Steam flow at intermediate pressure turbine inlet	3,121,25
No. 6 heater extraction steam flow	−117,752
Steam flow following extraction	3,003,506
No. 5 heater extraction steam flow	−102,330
Feedwater pump turbine extraction steam flow	−147,056
No. 3 gland low pressure leakoff flow	−3,500
No. 3 gland subatmospheric leakoff flow	−700
Crossover steam flow	2,749,920
No. 4 heater extraction steam flow	−114,391
Steam flow following extraction	2,635,529
No. 3 heater extraction steam flow	−106,000
Steam flow following extraction	2,529,529
No. 2 heater extraction steam flow	−107,419
Steam flow following extraction	2,422,110
No. 1 heater extraction steam flow	−204,087
Steam flow following extraction	2,218,023
Flow from steam seals	+482
Steam flow to condenser	2,218,505

Copyright ASME International
Provided by IHS under license with ASME
No reproduction or networking permitted without license from IHS
Not for Resale

TABLE 8.6
REVISED EXTRACTION PRESSURES: SECOND APPROXIMATION

Stage	*w*-lbm/hr	*w/p*	*p*-psia	%*p* change
Hot reheat inlet steam flow	3,069,966	5,873.6	521.7	0.2
Steam flow following No. 6 heater extraction	3,003,506	11,332.3	265.0	0.1
Crossover steam flow	2,749,920	18,393.4	149.5	0.8
Steam flow following No. 4 heater extraction	2,635,529	29,510.3	89.3	0.1
Steam flow following No.3 heater extraction	2,529,529	52,491.2	48.2	0.2
Steam flow following No. 2 heater extraction	2,422,110	98,228.1	24.7	0.0
Steam flow following No. 1 heater extraction	2,218,023	199,349.7	11.1	0.0

Exhaust pressure 2.0 in. Hg abs

Expansion-line end point (test value) 1,012.5 Btu/lbm

Moisture, M 0.089

Specific volume, v $339.26\ (1 - 0.089) = 309.07$ ft³/lbm

Annulus area, A 206.4 ft²

$$\text{Annulus velocity} = \frac{wv}{3600A} \quad \frac{2{,}218{,}505\ (309.07)}{3600\ (206.4)} = 922.8 \text{ ft/sec}$$

Exhaust loss from curve (Fig. 8.6) 21.2 Btu/lbm

Revised used energy end point

$$= 1{,}012.5 + 0.87\ (1 - 0.089)\ (21.2)$$
$$= 1{,}012.5 + 16.8$$
$$= 1{,}029.3 \text{ Btu/lbm}$$

A turbine heat rate and generator output, corrected to the specified values of Group 1 variables, were calculated by means of a heat balance around the turbine. Refer to Table 8.7.

8.5.2 Group 2 Corrections. Group 2 corrections described in para. 5.8.3 of the Code, and outlined in para. 5.12, cover the effect of deviations from specified initial and reheat steam conditions, reheater pressure drop, and exhaust pressure, and are determined from correction curves supplied by the turbine manufacturer. The revised conditions at the reheat turbine stop valve resulting from the Group 1 corrections must be used to determine the Group 2 corrections.

	Specified	Test, After Group 1 Corrections
Throttle pressure, psia	2,415	2,402
Throttle temperature, °F	1,000	1,005
Throttle flow, lbm/hr	. . .	3,460,986
Reheat temperature, °F	1,000	986.9
Exhaust pressure, in. Hg abs	1.5	2.0
Reheater pressure drop, %	10.0	8.44

Throttle steam flow was corrected to specified conditions for the effect of deviation in initial pressure and temperature as specified in para. 5.12.3 of the Code.

$$w_s = w_t \sqrt{\frac{p_s \times v_t}{p_t \times v_s}}$$
$$= 3{,}460{,}986 \sqrt{\frac{2{,}415 \times 0.3229}{2{,}402 \times 0.3193}}$$
$$= 3{,}460{,}986 \sqrt{1.0167}$$
$$= 3{,}460{,}986 \times 1.0083$$
$$= 3{,}489{,}712 \text{ lbm/hr } (439.7037 \text{ kg/s})$$

The factors listed in Table 8.8 permit correcting the test heat rate and load to specified conditions. Correction factors are defined as 1 + (% change)/100. These factors will be used as divisors when correcting from test to specified.

Corrected heat rate = 7,866/0.9993
= 7,872 Btu/kWhr (8,305 kJ/kWh)

Corrected load = 518,264/0.9894
= 523,816 kW

Copyright ASME International
Provided by IHS under license with ASME
No reproduction or networking permitted without license from IHS
Not for Resale

TABLE 8.7
TURBINE HEAT RATE AND GENERATOR OUTPUT

Parameters	Flow, lbm/hr	Enthalpy, Btu/lbm	Heat Flow, 10^6 Btu/hr
Heat In			
Throttle	3,460,986	1,464.2	5,067.68
Hot reheat	3,063,966	1,512.6	4,634.55
Total			9,702.13
Heat Out			
No. 2 valve stem leakoff	933	1,449.3	1.35
No. 1 gland high pressure leakoff	17,913	1,327.6	23.78
No. 1 gland low pressure leakoff	6,000	1,327.6	7.97
No. 1 gland subatmospheric leakoff	700	1,327.6	0.93
Extraction flow to No. 7 heater	314,182	1,312.6	412.40
Extraction flow to No 6 heater	117,752	1,414.1	166.51
Steam flow to feedwater pump drive turbine	147,056	1,354.7	199.22
Extraction flow to No. 5 heater	102,330	1,354.7	138.63
No. 3 gland low pressure leakoff	3,500	1,389.5	4.86
No. 3 gland subatmospheric leakoff	700	1,389.5	0.97
Cold reheat flow	3,036,966	1,312.6	4,021.76
Extraction flow to No. 4 heater	114,391	1,308.0	149.62
Extraction flow to No. 3 heater	106,000	1,253.9	132.91
Extraction flow to No. 2 heater	107,419	1,197.2	128.60
Extraction flow to No. 1 heater	204,087	1,140.2	232.70
Flow to condenser	2,218,505	1,029.3	2,283.51
Total			7,905.72

GENERAL NOTES:

(a) Heat used $= (9{,}702.13 - 7{,}905.72) \times 10^6 = 1{,}796.41 \times 10^6$ Btu/hr

(b) Equivalent power $= \dfrac{1{,}796.41 \times 10^6}{3{,}412.14} = 526{,}476.1$ kW

(c) Electrical losses (Fig. 8.5) 6,045 kW

(d) Fixed losses 2,167 kW

(e) Generator output, corrected for Group No. 1 variables = 518,264 kW

(f) Heat rate $= \dfrac{3{,}460{,}986\ (1{,}464.2 - 463.4) + 3{,}063{,}966\ (1{,}512.6 - 1{,}312.6)}{518{,}264}$

$= 7{,}866$ Btu/kWh (8,299 kJ/kWh)

TABLE 8.8
CORRECTION FACTORS

		Heat Rate		Load	
	Change	Percent Change	Correction	Percent Change	Correction
Throttle pressure (Fig. 8.9)	−13 psi −0.5%	+0.02	1.0002	−0.54	0.9946
Throttle temperature (Fig. 8.10)	+5.0°F	−0.08	0.9992	−0.15	0.9985
Reheat temperature (Fig. 8.11)	−13.1°F	+0.10	1.0010	−0.60	0.9940
Reheater pressure drop (Fig. 8.12)	−1.56%	−0.28	0.9972	+0.40	1.0040
Exhaust pressure (Fig. 8.13)	+0.5 in. Hg	+0.17	1.0017	−0.17	0.9983
Combined correction factor (product of correction factors)	...	...	0.9993	...	0.9894

Copyright ASME International
Provided by IHS under license with ASME
No reproduction or networking permitted without license from IHS
Not for Resale

According to para. 3.13.2 of the Code, test results may be compared with the specified performance by reading the difference between two locus curves, one drawn through the specified performance points and the other through the test points. The difference is determined at the specified load point.

The specified cycle, shown on Fig. 8.14, has a heat rate of 7,897 Btu/kWhr (8,332 kJ/kWh) at an output of 489,288 kW at the generator terminals.

The corrected test heat rate at this load, as determined from the locus curve shown in Fig. 8.15, was 7,856 Btu/ kWhr (8,288 kJ/kWh), 41 Btu/kWhr (43.3 kJ/kWh) better than specified.

Percent Change from expected

$$= \frac{(7{,}856 - 7{,}897)}{7{,}897} \times 100$$

$$= -0.5\%$$

The corrected test performance is 0.5% better than the specified turbine performance.

8.6 KEY TO FIGS. 8.1, 8.7, 8.8, AND 8.14

W = flow, lbm/hr
P = pressure, psia
F = temperature, °F
h = enthalpy, Btu/lbm
M = measured water flow
1 = No. 2 valve stem leakoff
2 = No. 1 gland low pressure leakoff
3 = No. 1 gland high pressure leakoff
4 = No. 3 gland low pressure leakoff
5 = main steam spraywater
6 = reheat steam spraywater
7 = gland seal steam; supplies four glands on main turbine shaft with equal flows and supplies each of two glands on the feedwater pump turbine with one-half the flow to the main turbine gland; therefore, a total of five glands
8 = gland seal return
9 = feedwater pump gland seal flow
10 = feedwater pump gland seal leakoff to condenser
11 = station heating steam flow return to condenser
A = No. 6 heater extraction
B = No. 5 heater extraction
C = No. 4 heater extraction
D = No. 3 heater extraction
E = No. 2 heater extraction
F = No. 1 heater extraction
G = steam jet air ejector steam

Copyright ASME International
Provided by IHS under license with ASME
No reproduction or networking permitted without license from IHS
Not for Resale

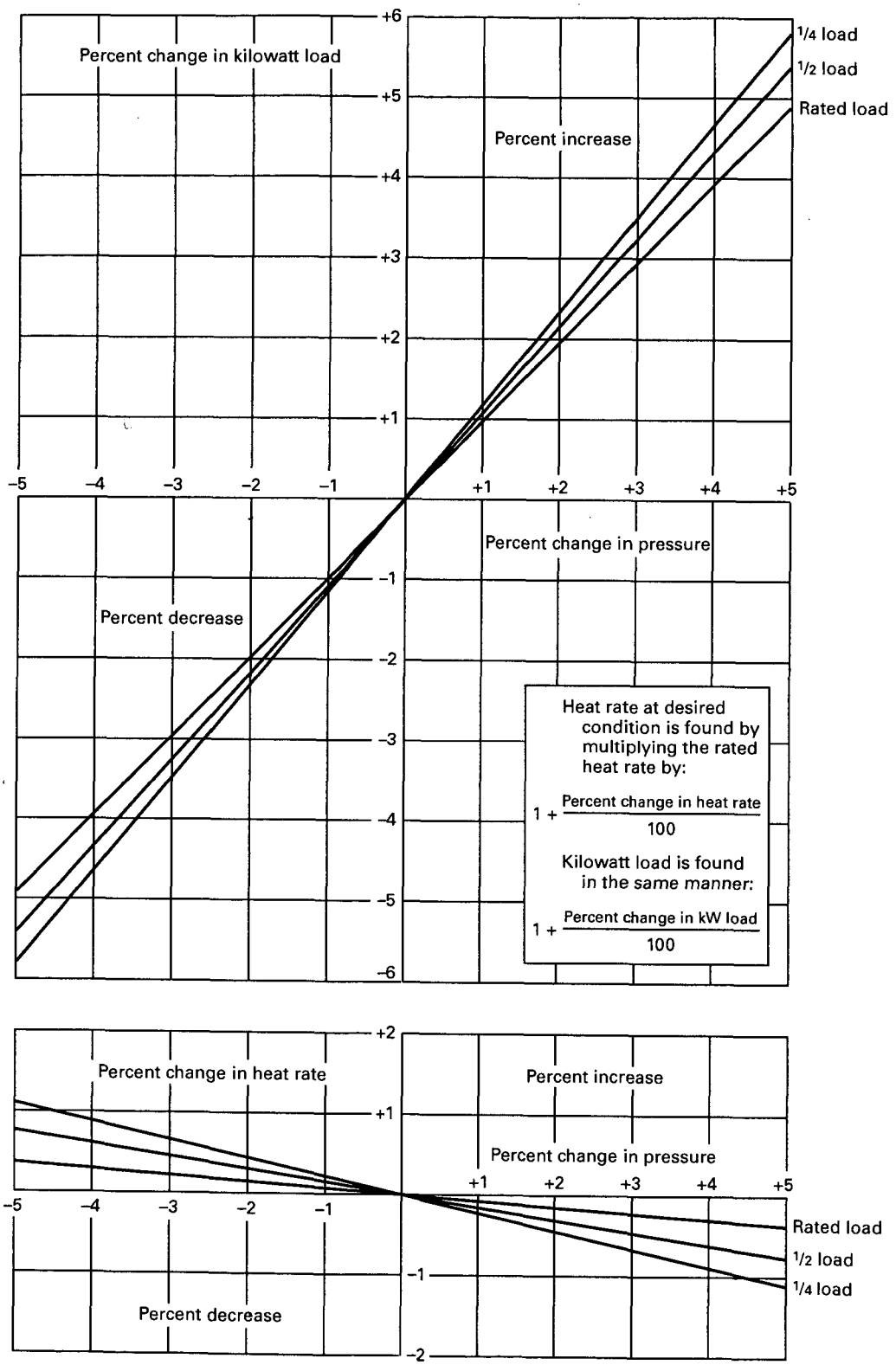

FIG. 8.9 THROTTLE PRESSURE CORRECTION FACTORS

Copyright ASME International
Provided by IHS under license with ASME
No reproduction or networking permitted without license from IHS
Not for Resale

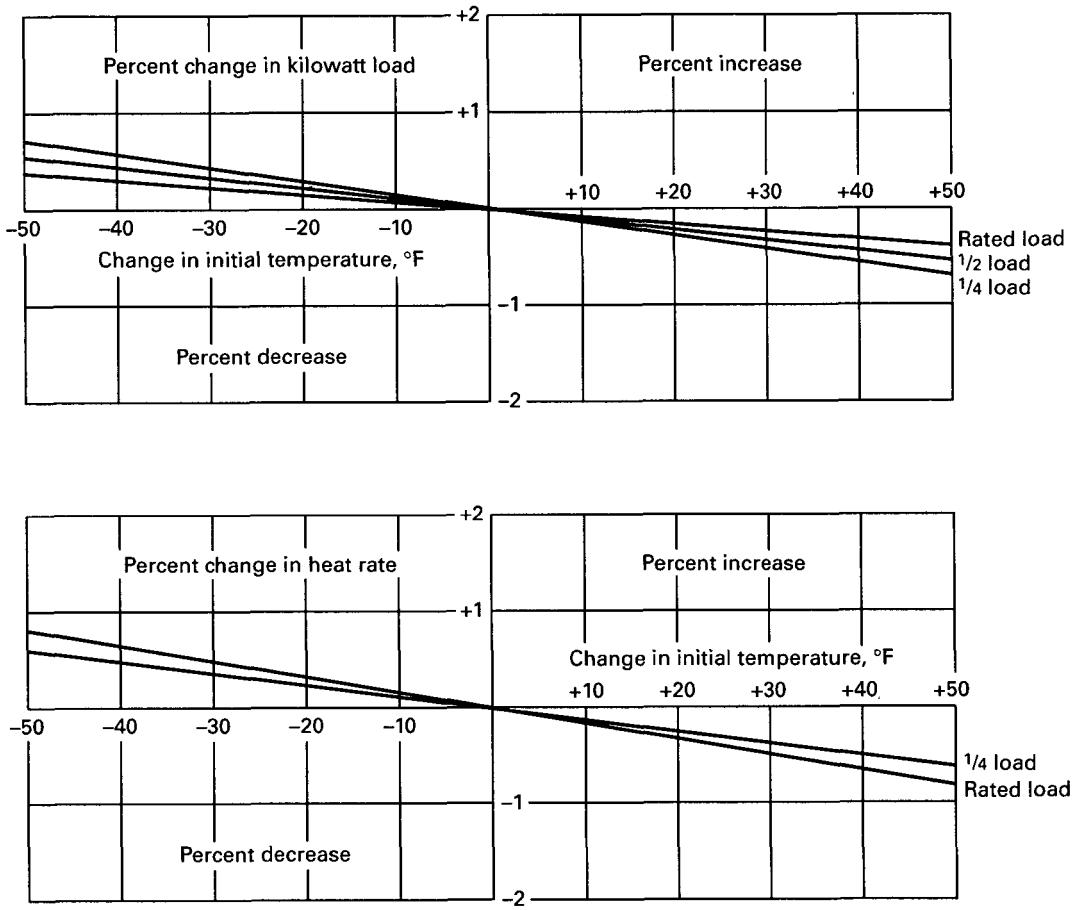

FIG. 8.10 THROTTLE TEMPERATURE CORRECTION FACTORS

Copyright ASME International
Provided by IHS under license with ASME
No reproduction or networking permitted without license from IHS
Not for Resale

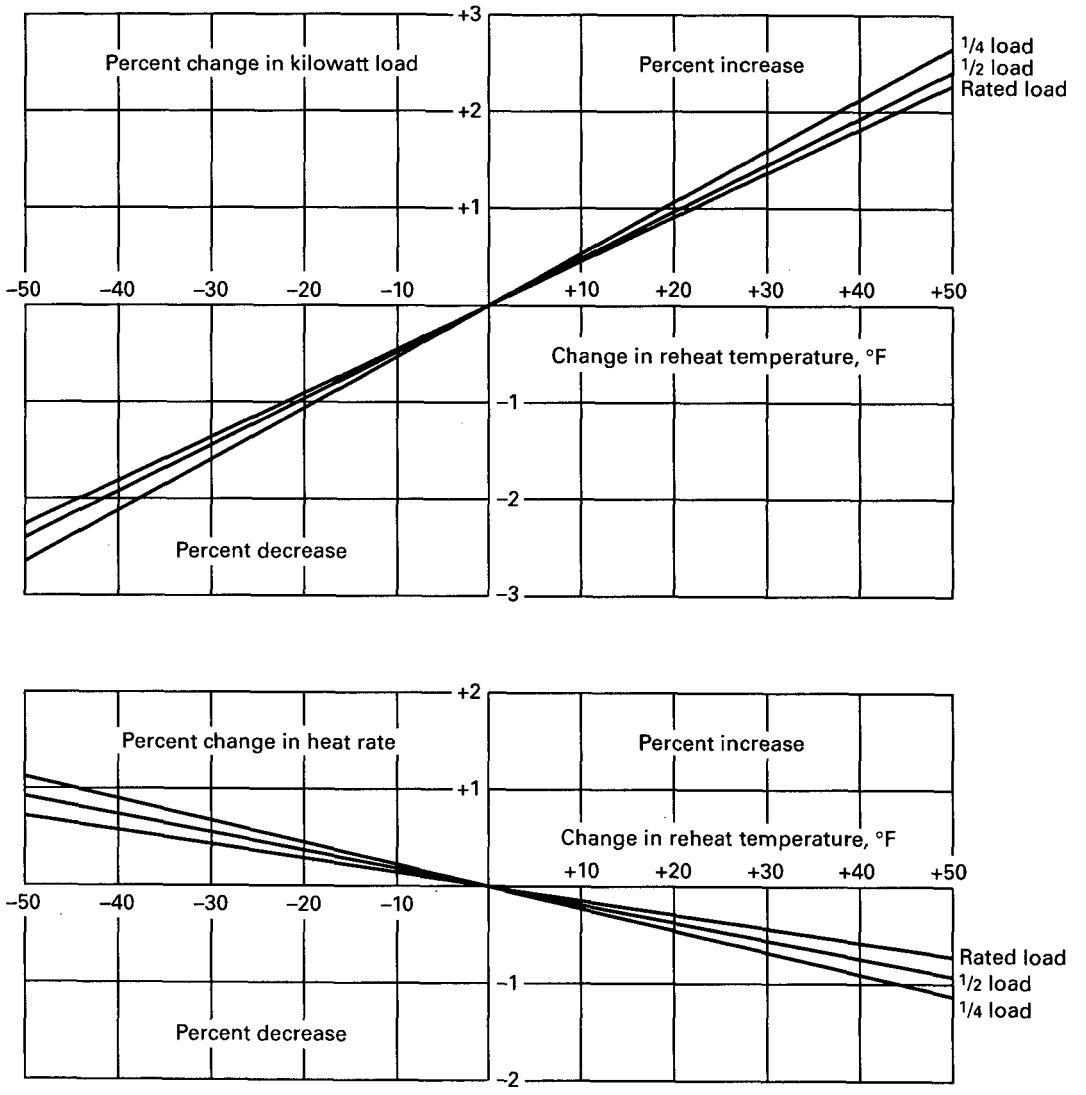

FIG. 8.11 REHEAT TEMPERATURE CORRECTION FACTORS

Copyright ASME International
Provided by IHS under license with ASME
No reproduction or networking permitted without license from IHS
Not for Resale

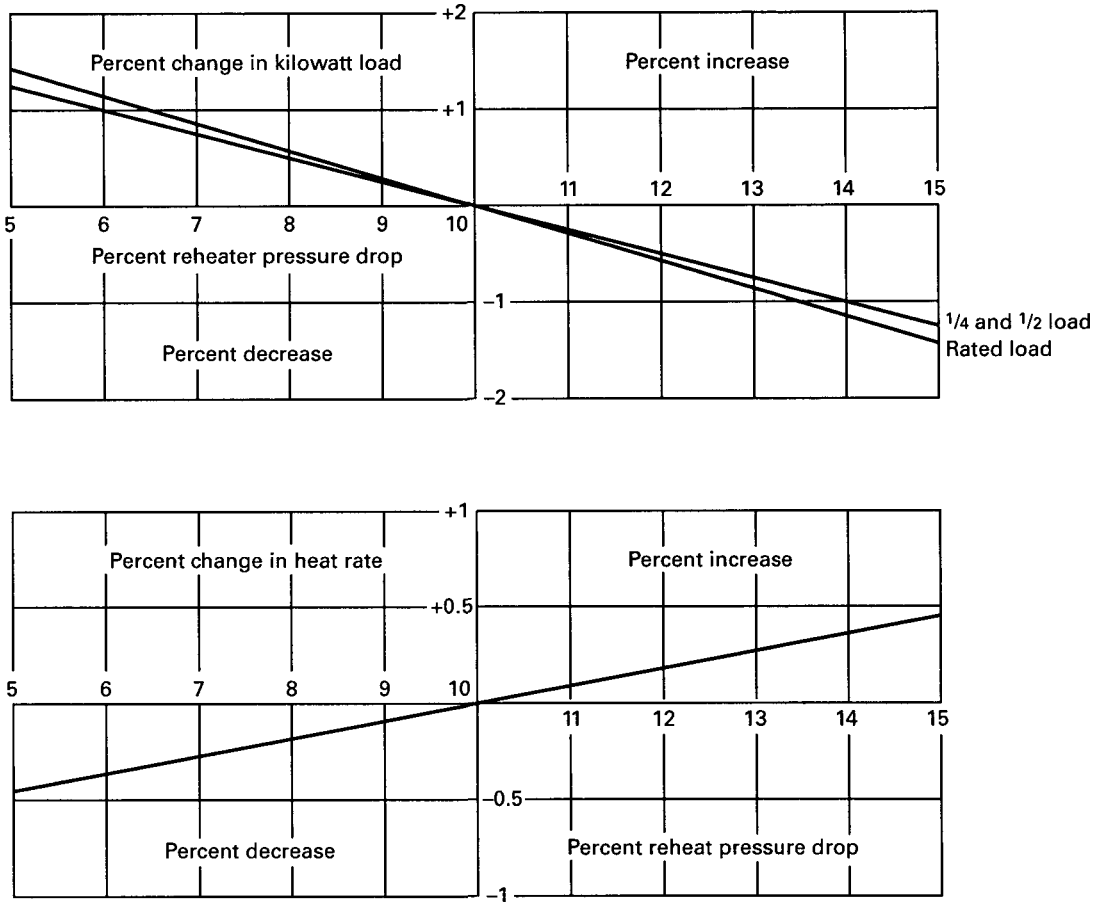

FIG. 8.12 REHEATER PRESSURE DROP CORRECTION FACTORS

Copyright ASME International
Provided by IHS under license with ASME
No reproduction or networking permitted without license from IHS
Not for Resale

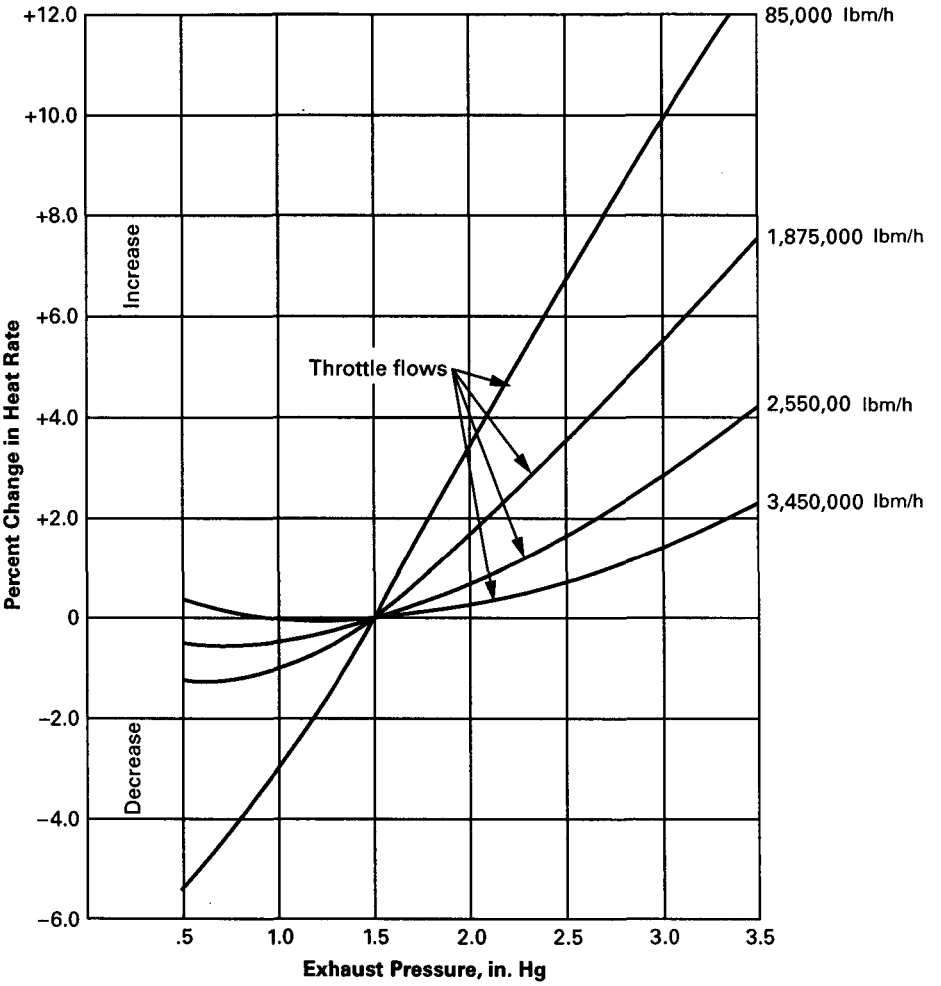

FIG. 8.13 EXHAUST PRESSURE CORRECTION FACTOR

Copyright ASME International
Provided by IHS under license with ASME
No reproduction or networking permitted without license from IHS
Not for Resale

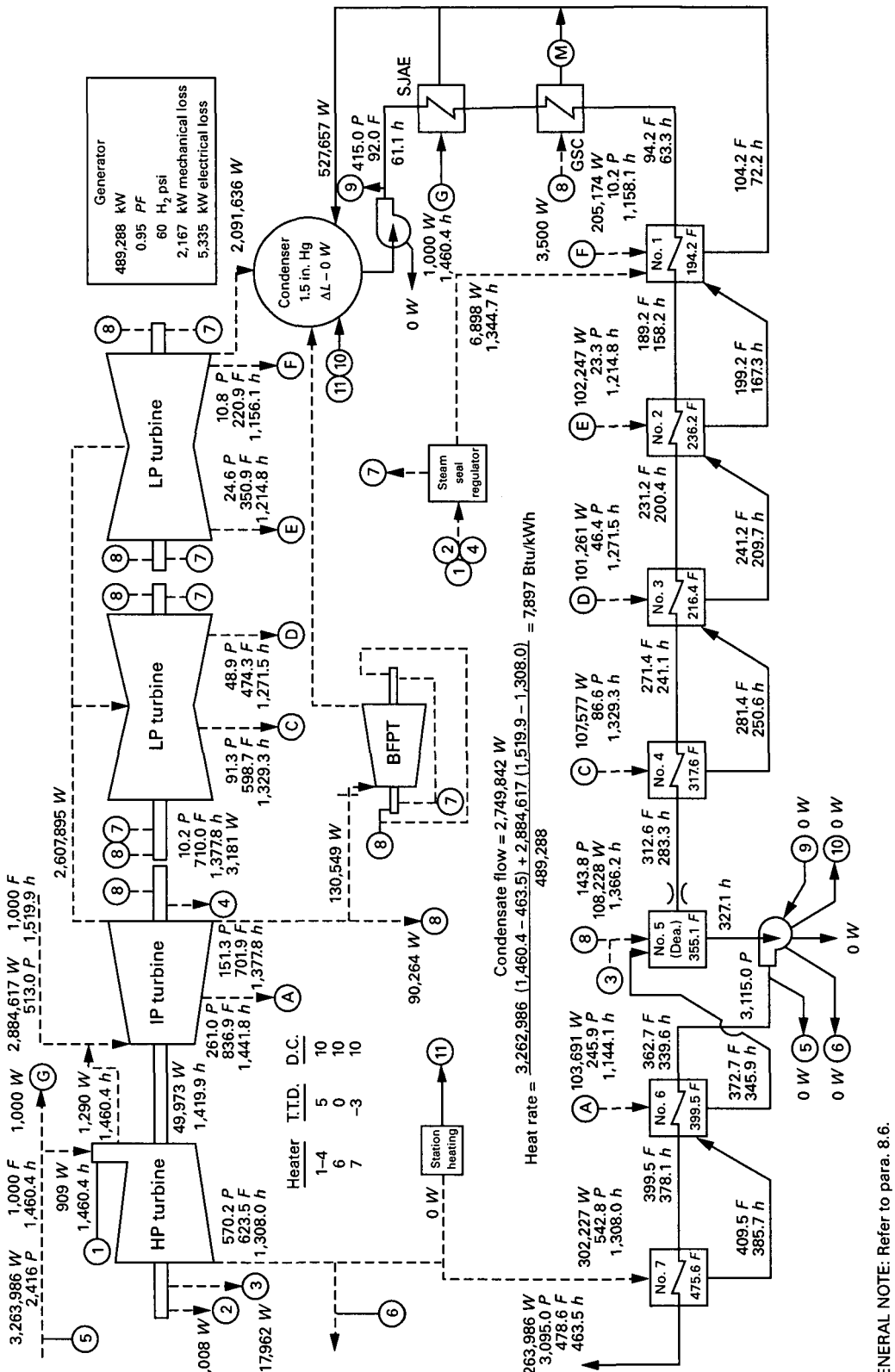

FIG. 8.14 SPECIFIED HEAT BALANCE

Copyright ASME International
Provided by IHS under license with ASME
No reproduction or networking permitted without license from IHS
Not for Resale

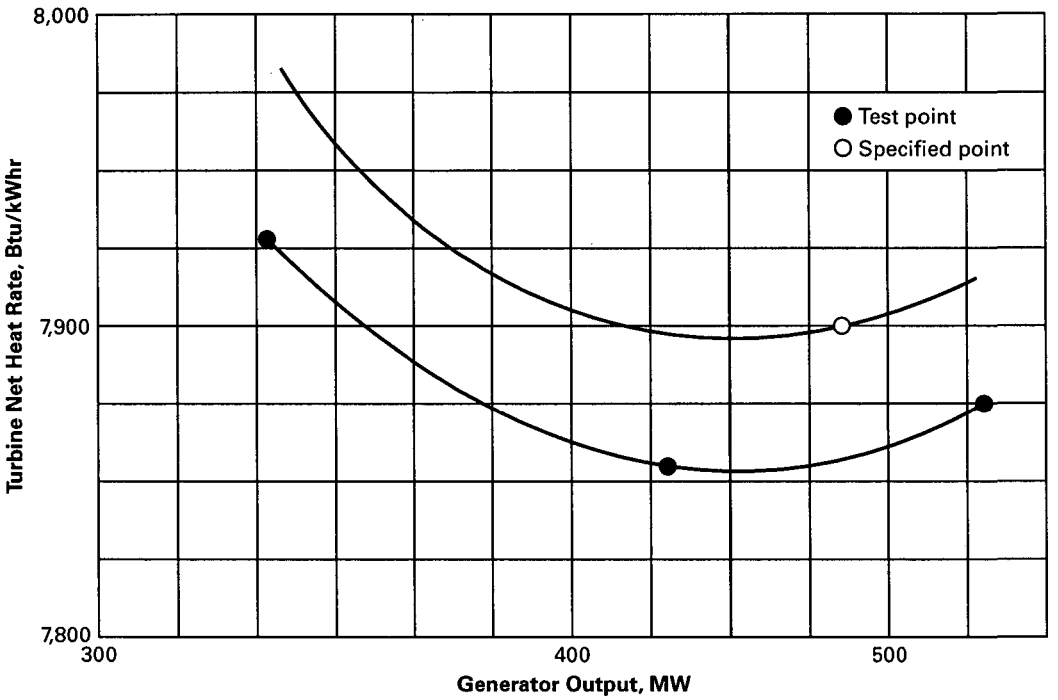

FIG. 8.15 HEAT RATE VERSUS LOAD

Copyright ASME International
Provided by IHS under license with ASME
No reproduction or networking permitted without license from IHS
Not for Resale

SECTION 8A — SAMPLE CALCULATION FOR A TEST OF A REHEAT-REGENERATIVE CYCLE USING THE ALTERNATIVE PROCEDURE WITH FINAL FEEDWATER FLOW MEASUREMENT

8A.1 DESCRIPTION OF UNIT AND BASIS OF GUARANTEE

The unit tested is the same unit that underwent a full-scale test in Section 8. It is a 500,000 kW, reheat-regenerative cycle turbine with an auxiliary turbine for the feedwater-pump drive and an extraction for station heating. The generator is rated at 560,000 kVA with 0.95 power factor and 60 psig hydrogen pressure. Rated steam conditions are 2,400 psig, 1,000°F and 1,000°F with 1.5 in. Hg absolute exhaust pressure. There are seven stages of feedwater heating. All main-turbine and auxiliary-turbine glands are steam sealed. Performance is guaranteed on the basis of heat rate with feedwater heating cycle conditions and auxiliary-turbine performance as specified in the contract. The exciter is shaft driven. The parties agreed to use the alternative procedure with final feedwater flow measurement for the acceptance test. The test was run at the valves-wide-open position.

8A.2 DESCRIPTION OF TEST INSTRUMENTATION

8A.2.1 Feedwater flow leaving the highest pressure feedwater heater was derived from the measured differential pressure developed by a calibrated throat-tap nozzle. The flow section was made in accordance with Fig. 4.8 of the Code, fitted with an inspection port, and permanently installed in the feedwater piping. During a turbine shutdown prior to the tests, the inspection port was opened, and the nozzle was inspected for damage and cleaned with high pressure water jets. At the first available shutdown after the tests, the nozzle was again inspected and found to have a slight, uniformly distributed iron oxide film less than 0.001 in. (0.025 mm) thick. Both parties agreed that this would have a negligible effect on the flow measurement.

8A.2.2 Calibrated pressure transducers in accordance with Code para. 4.17.1 were used to measure pressures with high accuracy (throttle, cold reheat, hot reheat, No. 7 heater extraction steam and LP turbine and auxiliary turbines exhaust pressures). Test Bourdon tube gages were used to measure feedwater and nozzle pressures. All other pressures were measured with pressure transducers through the station on-line computer.

8A.2.3 Type E Chromel-Constantan thermocouples in accordance with Code para. 4.18.2(a) were used with a precision potentiometer to measure temperatures with high accuracy (throttle, cold reheat, hot reheat, No. 7 heater extraction steam, feedwater to and from the No. 7 heater, drain leaving No. 7 heater, condensate leaving the hot well, auxiliary turbine throttle, air preheating steam, main steam desuperheating water, and reheat desuperheating water). All other temperatures were taken from the station on-line computer.

8A.2.4 The differential pressure across the flow nozzle was measured with high accuracy (0.05%) noncontacting optical sensors using a five $\frac{1}{2}$-digit multi-channel microprocessor readout. The flow corresponding to each set of taps was determined and averaged for the nozzle.

8A.2.5 Superheater and reheater desuperheating spray water flows were measured with station flow nozzles utilizing force-balance differential pressure transducers and the station on-line computer.

8A.2.6 Steam flows to the turbine driving the boiler feed pump and for station heating were measured

Copyright ASME International
Provided by IHS under license with ASME
No reproduction or networking permitted without license from IHS
Not for Resale

with calibrated venturi nozzles using force-balance differential pressure transducers and the station on-line computer.

8A.2.7 The cycle was isolated before conducting the test as described in Section 3 of the Code. Feedwater heater leakage was checked and found to be negligible. Steam flow to the air preheater coils was isolated during the test. Level changes were measured in accordance with para. 4.22 of the Code, and water losses were measured at the beginning and end of the test by means of a timed quantity of water. Adequacy of the system isolation was checked by a water balance as shown below.

8A.2.8 Steam flow to the air ejectors from main steam, valve packing leakage flows, and steam seal flows were assumed to be design values.

8A.2.9 Before the test, all pertinent cycle pressures and temperatures to be taken from the station computer were checked with test instrumentation and calibrations were performed when differences in readings greater than 1.0% were noted.

8A.3 SUMMARY OF TEST DATA

All test measurements were averaged and corrected for instrument calibrations. All test data including steam and water properties are summarized in Fig. 8A.1.

The test data and flow results from high accuracy instruments are shown in boxes in Fig. 8A.1 to distinguish them from station instrumentation averages.

8A.4 CALCULATION OF TEST TURBINE HEAT RATE FOR VWO TEST

8A.4.1 Calculations for Test Turbine Heat Rate. The test turbine heat rate for VWO test is presented in Table 8A.1. The No. 7 heater extraction steam flow is illustrated in Fig. 8A.2.

(a) Unaccounted-for Water Losses

Flow	Rate, lbm/hr
Steam generator drum level change	0
Hotwell storage change (level drop)	−8,000
Deaerator storage change	0
Feedwater pump leakage	3,000
Condensate pump leakage	3,500
Σ (leakage and storage)	−1,500

(b) Throttle Flow

Flow	Rate, lbm/hr
Measured feedwater flow (w_f)	3,355,391
Unaccounted-for water losses	−1,500
Superheater desuperheating spray flow	108,100
Steam flow to air ejectors	− 1,000
Throttle flow (w_t)	3,460,991

(c) High Pressure Turbine Exhaust Flow

Flow	Rate, lbm/hr
Throttle flow	3,460,991
High pressure valve stem leakage flow	−1,324
Low pressure valve stem leakage flow	−933
No. 2 gland high pressure leak-off flow	−55,968
No. 1 gland leak off flow	−24,613
High pressure turbine exhaust flow	3,378,153

(d) No. 7 Heater Extraction Steam Flow (See Fig. 8A.2)

$$w_f h_7 + w_f h_{fi\,7} = w_f h_{fo\,7} + w_7 h_{7d}$$

$$w_7 = \frac{w_f(h_{fo\,7} - h_{fi\,7})}{(h_7 - h_{7d})}$$

$$w_7 = \frac{3{,}355{,}391\ (464.7 - 381.7)}{1{,}310.4 - 389.4}$$

$$w_7 = 302{,}386 \text{ lbm/hr}$$

(e) Cold Reheat Steam Flow

w_{crh} = high pressure turbine exhaust flow
− No. 7 heater extraction steam flow
− steam flow to station heating
= 3,378,153 − 302,386 − 19,100

w_{crh} = 3,056,667 lbm/hr

(f) Hot Reheat Steam Flow

w_{hrh} = cold reheat steam flow + reheat spray flow
= 3,056,667 + 62,200

w_{hrh} = 3,118,867 lbm/hr

(g) Output Corrected for Power Factor and Hydrogen Pressure. Measured output is corrected for deviations in hydrogen pressure and power factor by use of generator electrical loss curves. In this example, the design and test hydrogen pressures were the same; therefore,

Hydrogen pressure correction = 0 kW

Design power factor and test power factor were 0.95. If these were different, the power factor correc-

Copyright ASME International
Provided by IHS under license with ASME
No reproduction or networking permitted without license from IHS
Not for Resale

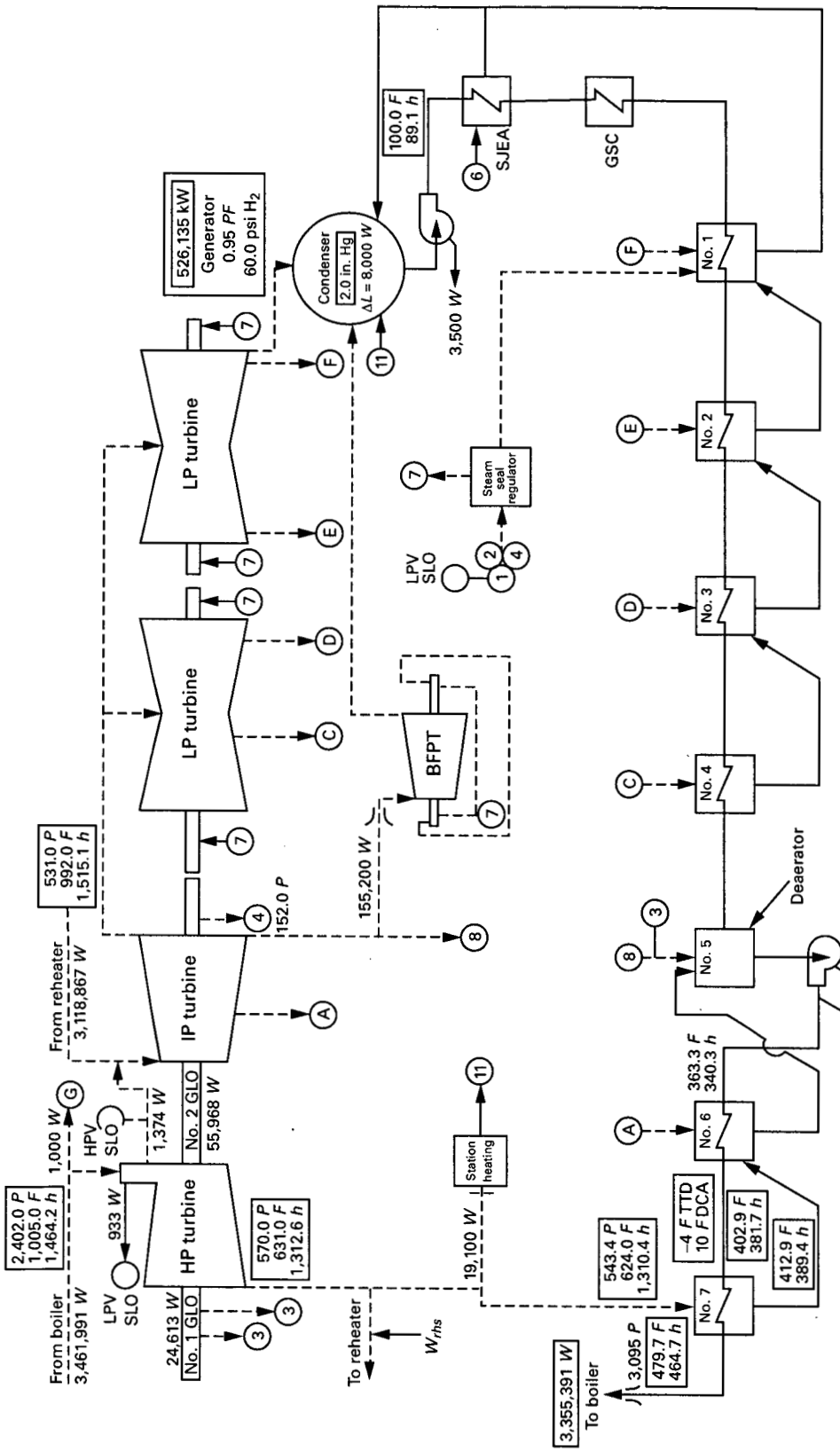

GENERAL NOTES:
(a) Numbers in boxes are from high-accuracy instrumentation.
(b) Refer to para. 8A.9.

FIG. 8A.1 REHEAT-REGENERATIVE TEST CYCLE

Copyright ASME International
Provided by IHS under license with ASME
No reproduction or networking permitted without license from IHS
Not for Resale

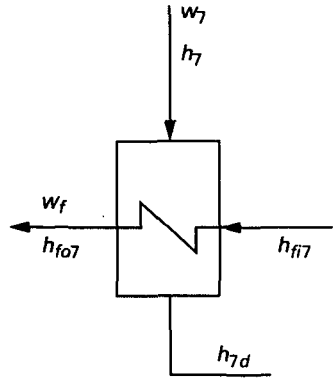

FIG. 8A.2 DIAGRAM FOR NO. 7 HEATER EXTRACTION STEAM FLOW

tion would be determined by subtracting the design electrical losses from the electrical losses under test conditions using the manufacturer's curve.

But in this example

$$\text{power factor correction} = 0 \text{ kW}$$

For this example, measured kW = 526,135 kW

$$\text{hydrogen pressure correction} = 0$$

$$\text{power factor correction} = 0$$

$$\text{corrected kW} = 526{,}135 \text{ kW}$$

8A.4.2 Test Cycle Heat Rate. Test cycle heat rate is calculated using the relationship given in para. 5.7.1 of the Code. In this cycle, the heat input is modified for the effect of superheater steam desuperheating flow and reheat-steam desuperheating flow. The net heat rate equation for this example becomes

$$HR_t = \frac{(w_t - w_{shs})(h_t - h_{fo7}) + w_{shs}(h_t - h_{fi6}) + w_{crh}(h_{hrh} - h_{crh}) + w_{rhs}(h_{hrh} - h_{rhs})}{\text{Generator Output}}$$

$$HR_t = \frac{\begin{array}{c}(3{,}460{,}991 - 108{,}100)(1{,}464.2 - 464.7) \\ + 108{,}100\,(1{,}464.2 - 340.3) \\ + 3{,}056{,}667\,(1{,}515.1 - 1{,}312.6) \\ + 62{,}200\,(1{,}515.1 - 334.2)\end{array}}{526{,}135}$$

$$HR_t = 7{,}916 \text{ Btu/kWhr } (8{,}352 \text{ kJ/kWh})$$

8A.5 CALCULATION OF GROUP 1 CORRECTIONS

8A.5.1 Paragraph 5.8.2 of the Code states that Group 1 cycle corrections for the effect of variables that primarily affect the feed-heating system can be made by heat balance calculation or by application of correction curves or tables. These curves or tables are developed by rigorous heat balance techniques and are used to correct the test cycle heat rate for the effect of significant changes in the cycle from that used in the specified cycle heat balance. Correction curves for the cycle shown in Fig. 8A.1 are given in Figs. 8A.3 through 8A.7. Corrections are usually made for the following significant cycle deviations:

(a) changes in final feedwater temperature due to changes in terminal temperature difference (TTD) and extraction line pressure drop (ELPD) of the highest pressure feedwater heater

(b) changes in auxiliary extraction steam flow

(c) changes in superheat and reheat desuperheating flow

(d) condensate subcooling

(e) condenser make-up flow

Copyright ASME International
Provided by IHS under license with ASME
No reproduction or networking permitted without license from IHS
Not for Resale

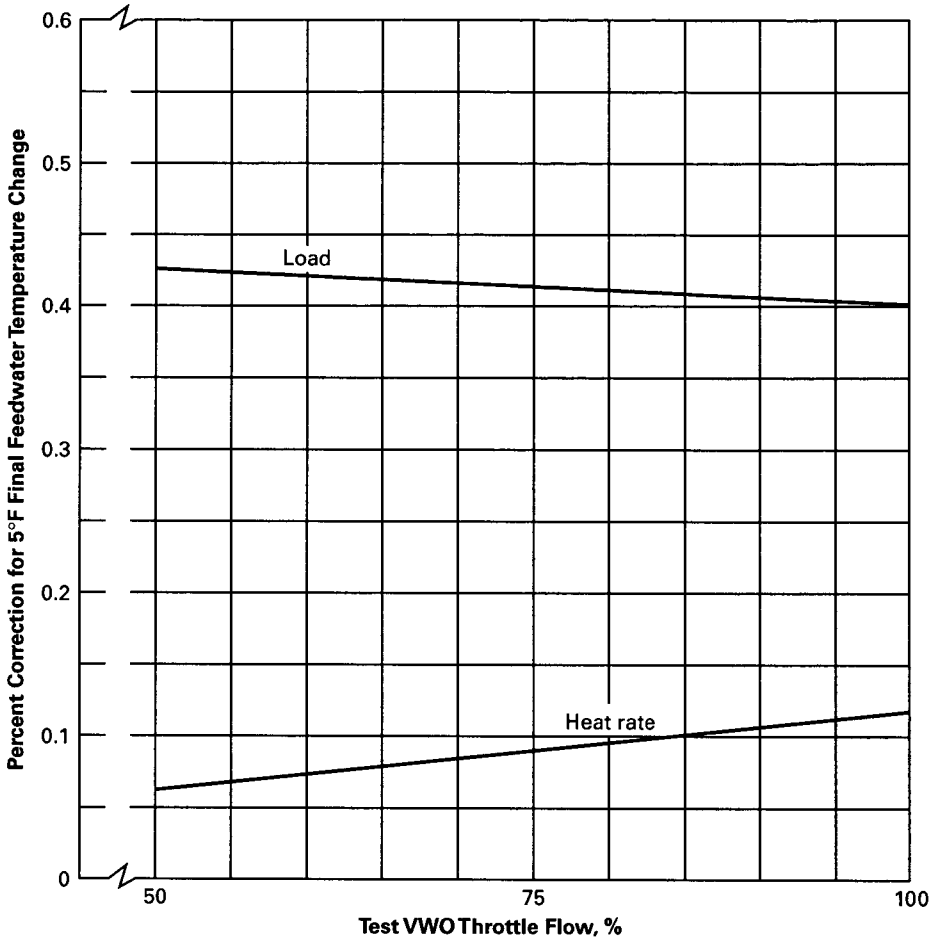

FIG. 8A.3 FINAL FEEDWATER TEMPERATURE CORRECTION

(f) changes in extraction flow to the feedwater pump turbine

8A.5.2 Comparison Between Test Cycle and Specified Cycle, Group 1 Variables. Table 8A.1 shows the significant deviations in the cycle as tested from that shown on the specified heat balance.

The corrections in paras. 8A.5.3 through 8A.5.9 are derived as prescribed in Table 8.1 of PTC 6-1996.

8A.5.3 TTD Correction of Top Heater. The No. 7 feedwater heater operated with a 1°F lower TTD during the test than was specified. From Fig. 8A.3 at 100.0% VWO throttle flow:

$$\Delta HR = +0.12\%/5°F \text{ Change}$$

$$\Delta kW = +0.403\%/5°F \text{ Change}$$

Correction Factors

$$HR = 1 + \left(\frac{\text{Percent Correction}}{100} \times \frac{(TTD_t - TTD_d)}{5}\right)$$

$$= 1 + \left(\frac{0.12}{100} \times \frac{-4.0 - (-3.0)}{5}\right)$$

$$= 0.9992$$

$$\text{Load} = 1 + \left(\frac{\text{Percent Correction}}{100} \times \frac{TTD_t - TTD_d)}{5}\right)$$

Copyright ASME International
Provided by IHS under license with ASME
No reproduction or networking permitted without license from IHS
Not for Resale

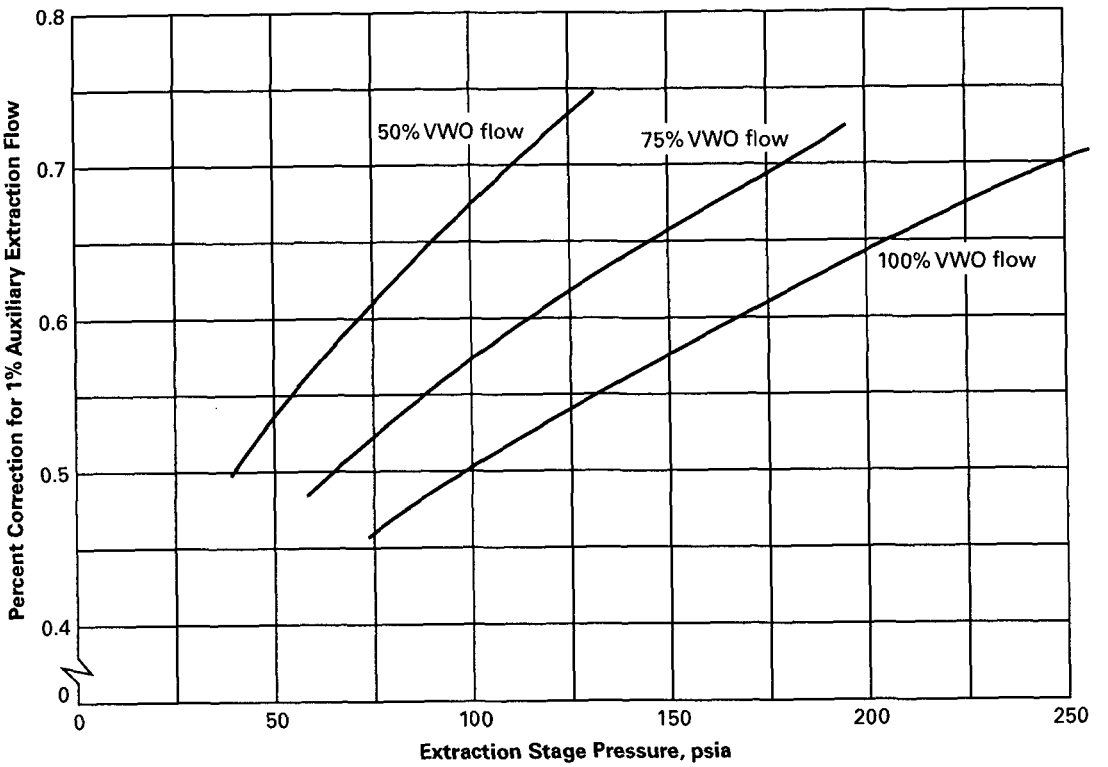

GENERAL NOTES:
(a) Auxiliary extraction returns to condenser.
(b) Percent auxiliary extraction is percent of throttle flow.
(c) The correction applies to both load and heat rate.

FIG. 8A.4 AUXILIARY EXTRACTION CORRECTION (EXTRACTION DOWNSTREAM OF RE-HEATER)

$$= 1 + \left(\frac{0.403}{100} \times \frac{-4.0 - (-3.0)}{5}\right)$$

$$= 0.9998$$

8A.5.4 Extraction Line Pressure Drop (ELPD) Correction of Top Heater. The No. 7 feedwater heater operated at 0.33% lower extraction-line pressure drop during the test than was specified, with an actual pressure drop of 26.6 psi versus 27.4 psi in the specified cycle. The lower pressure drop in the test cycle caused the saturation temperature of the heater to be higher than would be expected and increased the final feedwater temperature.

$$(P_{test} - \Delta P_{design}) = 570.0 - 27.4$$

$$= 542.6 \text{ psig}$$

$$t_{sat} \text{ at } 542.6 \text{ psig} = 475.5°F$$

$$(P_{test} - \Delta P_{test}) = 570.0 - 26.6$$

$$= 543.4 \text{ psig}$$

$$t_{sat} \text{ at } 543.4 \text{ psig} = 475.7°F$$

This correction uses the same Fig. 8A.3 as in para. 8A.5.3, and, because the values change only with load setting, the percent correction values for heat rate and load are the same as used for the TTD correction of the top heater in para. 8A.5.3.

Correction Factors

$$HR = 1 + \left(\frac{\text{Percent Correction}}{100} \times \frac{[t_{sat} \text{ at } (P_{tbtest} - \Delta P_{design}) - t_{sat} \text{ at } (P_{tbtest} - \Delta P_{test})]}{5}\right)$$

Copyright ASME International
Provided by IHS under license with ASME
No reproduction or networking permitted without license from IHS
Not for Resale

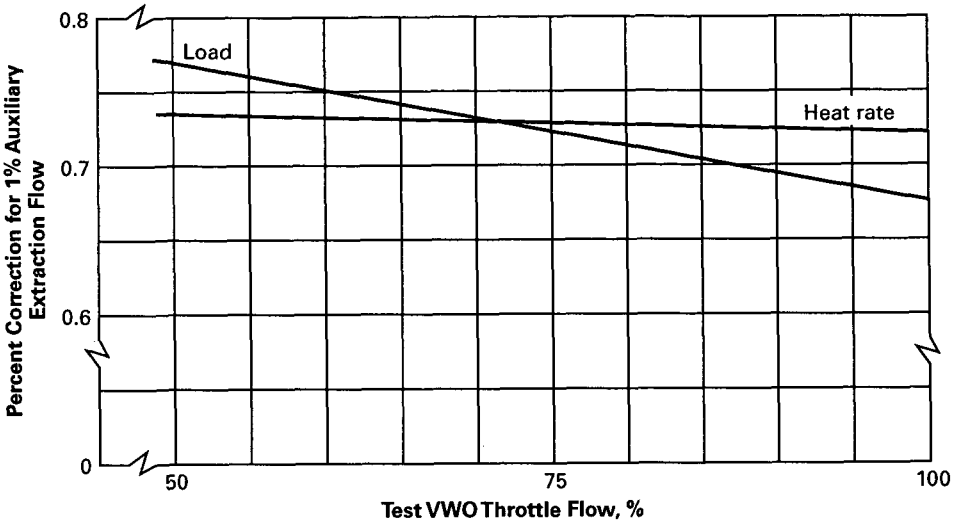

GENERAL NOTES:
(a) Auxiliary extraction returns to condenser.
(b) Percent auxiliary extraction is percent of throttle flow.

FIG. 8A.5 CORRECTION FOR AUXILIARY EXTRACTION FROM COLD REHEAT

$$= 1 + \left(\frac{0.12}{100} \times \frac{(475.5 - 475.7)}{5}\right)$$

$$= 0.9999$$

$$\text{Load} = 1 + \left(\frac{\text{Percent Correction}}{100} \times \frac{[t_{sat}\ \text{at}(P_{tbtest} - \Delta P_{design}) - t_{sat}\ \text{at}\ (P_{tbtest} - \Delta P_{test})]}{5}\right)$$

$$= 1 + \left(\frac{0.403}{100} \times \frac{(475.5 - 475.7)}{5}\right)$$

$$= 0.9998$$

8A.5.5 Auxiliary Extraction Steam Flow Correction. Extraction flow for station heating comes from the cold reheat steam line. During the test this flow was measured to be 19,100 lbm/hr, whereas it is zero in the specified cycle. Auxiliary flow at this point in the cycle causes a change in the hot reheat steam flow that affects the intermediate pressure (IP) and low pressure (LP) turbine stage pressure distribution and LP turbine stage flow, which affects the IP and LP turbine exhaust losses. Figure 8A.5 is used for this correction at 100.0% VWO throttle flow.

$$\text{Percent Auxiliary Extraction} = \frac{19{,}100 \times 100}{3{,}460{,}991}$$

$$= 0.55\%\ \text{of}\ w_t$$

HR = 0.723% per Percent Auxiliary Extraction

kW = 0.677% per Percent Auxiliary Extraction

Correction Factors

$$\text{HR} = 1 + \left[\frac{\text{Percent Correction}}{100}\ (\text{Percent Auxiliary Extraction}_{test} - \text{Percent Auxiliary Extraction}_{des})\right]$$

$$= 1 + \left[\frac{0.723}{100}(0.55 - 0)\right]$$

$$= 1.0040$$

Copyright ASME International
Provided by IHS under license with ASME
No reproduction or networking permitted without license from IHS
Not for Resale

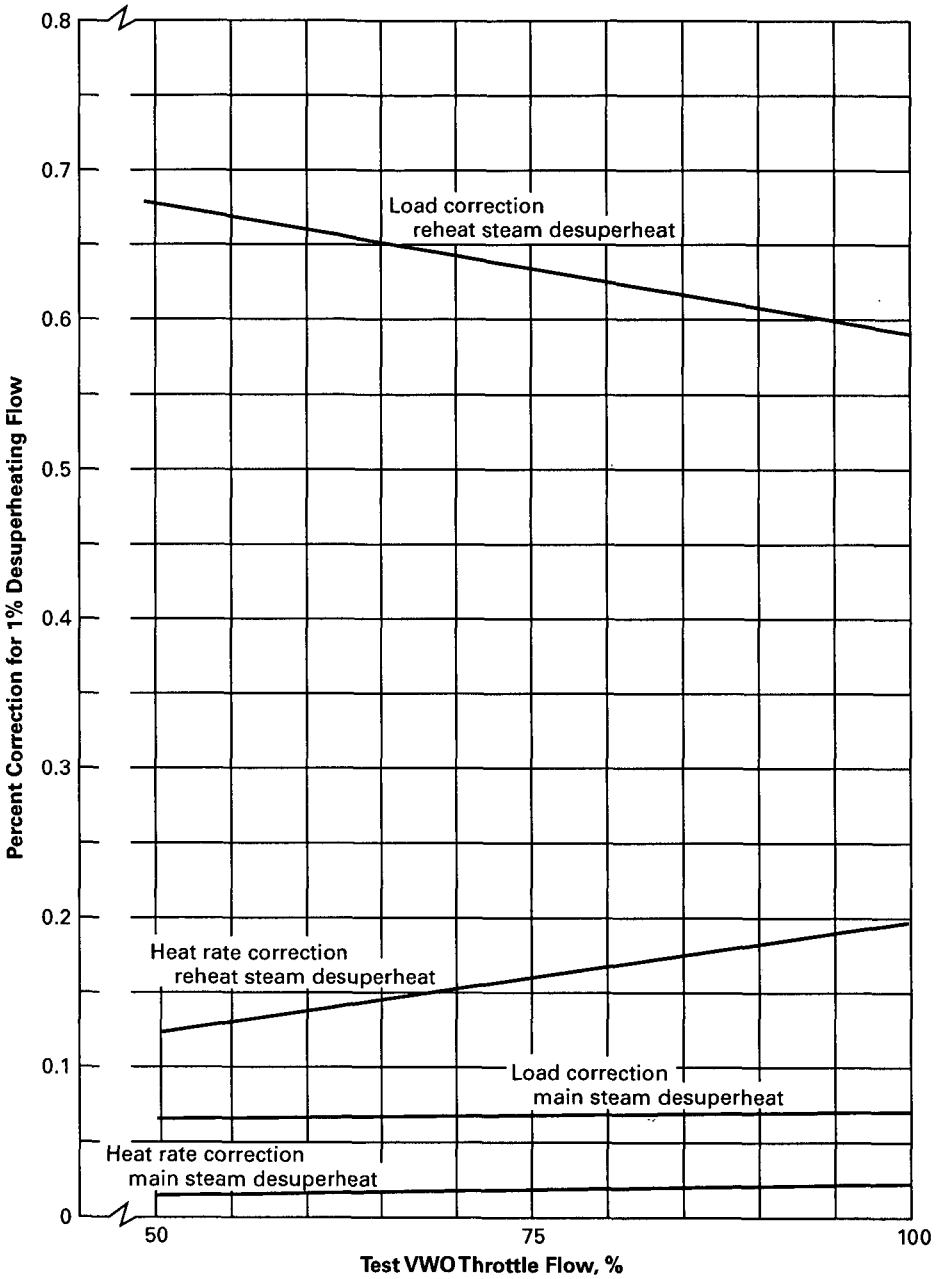

GENERAL NOTES:
(a) Percent desuperheating flow is percent of throttle flow.
(b) Desuperheating flow supply is from feedwater pump.
(c) Apply corrections at a constant main steam and reheat temperature.

FIG. 8A.6 CORRECTIONS FOR MAIN STEAM AND REHEAT STEAM DESUPERHEATING FLOW

Copyright ASME International
Provided by IHS under license with ASME
No reproduction or networking permitted without license from IHS
Not for Resale

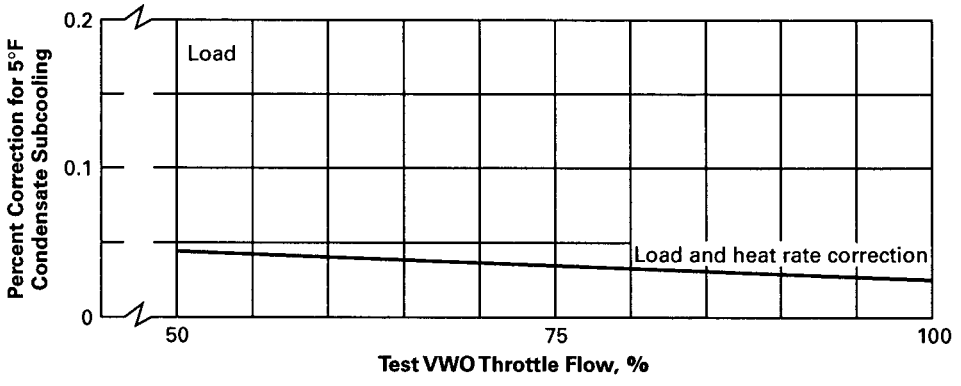

FIG. 8A.7 CONDENSATE SUBCOOLING CORRECTION

TABLE 8A.1
COMPARISON BETWEEN TEST CYCLE AND SPECIFIED CYCLE, GROUP 1 VARIABLES

Flow	Test Cycle	Specified Cycle
No. 7 heater TTD	−4.0°F	−3.0°F
No. 7 heater ELPD	26.6 psi (4.67%)	27.4 psi (5.0%)
Auxiliary steam flow for station heating	19,100 lbm/hr	0
Reheat desuperheating flow	62,200 lbm/hr	0
Superheat desuperheating flow	108,100 lbm/hr	0
Condensate subcooling	1.1°F	0
Condenser make-up flow	0	0
BFPT throttle flow	155,200 lbm/hr	130,549 lbm/hr
Turbine throttle flow	3,469,991 lbm/hr	3,263,986 lbm/hr
Generator output	526,135 kW	489,288 kW

GENERAL NOTE:

$$\text{Percent VWO Throttle Flow} = \frac{3{,}460{,}991}{3{,}460{,}991} \times 100 = 100.0\%$$

Copyright ASME International
Provided by IHS under license with ASME
No reproduction or networking permitted without license from IHS
Not for Resale

$$\text{Load} = 1 - \left[\frac{\text{Percent Correction}}{100}\right.$$
$$(\text{Percent Auxiliary Extraction}_{test} -$$
$$\left.\text{Percent Auxiliary Extraction}_{des})\right]$$
$$= 1 - \left[\frac{0.677}{100}(0.55 - 0)\right]$$
$$= 0.9963$$

8A.5.6 Reheat Desuperheating Flow Correction. Reheat desuperheating flow in the test cycle causes higher hot reheat steam flow, increases turbine stage pressures downstream of the intercept valves and increases LP turbine exhaust losses due to higher flows to the condenser. In the specified cycle, reheat desuperheating flow was zero. Figure 8A.6 is used for this correction at 100.0% VWO throttle flow.

$$\text{Percent Desuperheating Flow} = \frac{62{,}200 \times 100}{3{,}460{,}991}$$
$$= 1.8\% \text{ of } w_t$$

HR = 0.198% per Percent Desuperheating Flow

kW = 0.590% per Percent Desuperheating Flow

Correction Factors

$$\text{HR} = 1 + \left(\frac{\text{Percent Correction}}{100} \times \text{Percent Desuperheating Flow}\right)$$
$$= 1 + \left(\frac{0.198}{100} \times 1.80\right)$$
$$= 1.0036$$

$$\text{Load} = 1 + \left(\frac{\text{Percent Correction}}{100} \times \text{Percent Desuperheating Flow}\right)$$
$$= 1 + \left(\frac{0.590}{100} \times 1.80\right)$$
$$= 1.0106$$

8A.5.7 Throttle Desuperheating Flow Correction. Throttle desuperheating flow causes reduced extraction steam flows to the feedwater heaters downstream of the point where the flow leaves the cycle due to the lower feedwater flow through the heaters. However, because the flow re-enters the cycle ahead of the turbine stop valves, the turbine stage pressure distribution change is generally limited to the high pressure turbine. In the specified cycle, throttle desuperheating flow was zero. Figure 8A.6 is used for this correction at 100.0% VWO throttle flow.

$$\text{Percent Desuperheating Flow} = \frac{108{,}100 \times 100}{3{,}460{,}991}$$
$$= 3.12\% \text{ of } w_t$$

ΔHR = 0.023% per Percent Desuperheating Flow

ΔkW = 0.073% per Percent Desuperheating Flow

Correction Factors

$$\text{HR} = 1 + \left(\frac{\text{Percent Correction}}{100} \times \text{Percent Desuperheating Flow}\right)$$
$$= 1 + \left(\frac{0.023}{100} \times 3.12\right)$$
$$= 1.0007$$

$$\text{Load} = 1 + \left(\frac{\text{Percent Correction}}{100} \times \text{Percent Desuperheating Flow}\right)$$
$$= 1 + \left(\frac{0.073}{100} \times 3.12\right)$$
$$= 1.0023$$

8A.5.8 Correction for Condensate Subcooling. The condenser operated during the test with 1.1°F subcooling below the saturation temperature corresponding to turbine exhaust pressure. This placed a greater duty on the lowest pressure feedwater heater causing additional extraction that affects the used energy end point and exhaust loss calculations. Figure 8A.7 is used for this correction at 100.0% VWO throttle flow.

Copyright ASME International
Provided by IHS under license with ASME
No reproduction or networking permitted without license from IHS
Not for Resale

ΔHR = 0.026% per 5°F subcooling

ΔkW = 0.026% per 5°F subcooling

Correction Factors

$$HR = 1 + \left(\frac{\text{Percent Correction}}{100} \times \frac{\text{°F subcooling}}{5}\right)$$

$$= 1 + \left(\frac{0.026}{100} \times \frac{1.1}{5}\right)$$

$$= 1.0001$$

$$Load = 1 - \left(\frac{\text{Percent Correction}}{100} \times \frac{\text{°F subcooling}}{5}\right)$$

$$= 1 - \left(\frac{0.026}{100} \times \frac{1.1}{5}\right)$$

$$= 0.9999$$

8A.5.9 Correction for Change in BFPT Throttle Flow. The feedwater pump turbine extracts steam from the crossover between the IP turbine exhaust and the LP turbine inlet. During the test, this turbine extracted more steam than in the specified cycle that caused a reduction in LP turbine steam flow affecting LP turbine stage pressure distribution and end point calculations. Figure 8A.4 is used for this correction at 100.0% VWO throttle flow and 152.0 psia extraction pressure.

$$\text{\% BFPT Extraction (test)} = \frac{155{,}200 \times 100}{3{,}460{,}991}$$

$$= 4.484\%$$

$$\text{\% BFPT Extraction (specified)} = \frac{130{,}549 \times 100}{3{,}263{,}986}$$

$$= 4.000\%$$

Correction = 0.582% per percent extraction

Correction Factors

$$HR = 1 + \left(\frac{\text{Percent Correction}}{100}\right) \times (\text{Percent BFPT Extraction}_{test} - \text{Percent BFPT Extraction}_{spec})$$

$$= 1 + \left(\frac{0.582}{100}\right)(4.484 - 4.000)$$

$$= 1.0028$$

$$Load = 1 - \left(\frac{\text{Percent Correction}}{100}\right) \times (\text{Percent BFPT Extraction}_{test} - \text{Percent BFPT Extraction}_{spec})$$

$$= 1 - \left(\frac{0.582}{100}\right)(4.484 - 4.000)$$

$$= 0.9972$$

NOTE: For simplicity, this example assumed that the main turbine exhaust pressure correction factor obtained from Fig. 8.13 does not include the exhaust pressure correction for the BFPT throttle flow. Generally, the BFPT exhaust pressure must be measured and used to correct the BFPT throttle flow in accordance with pre-test agreements between the user and the manufacturer. See also para. 8.4.2 of the Code.

8A.5.10 Summary of Group 1 Corrections. Table 8A.2 summarizes the heat rate and load correction factors that were found by multiplying the individual correction factors and rounding to the same number of significant figures.

8A.6 CALCULATION OF GROUP 2 CORRECTIONS

8A.6.1 Paragraph 5.8.3 of the Code discusses corrections for deviation in the variables that primarily affect turbine performance. These corrections can be calculated by heat balance techniques but are generally determined from correction curves supplied by the turbine manufacturer. Use of the correction curves requires correction of the test throttle flow to design conditions, as follows:

$$w_{tc} = w_t \sqrt{\frac{P_s \times v_t}{P_t \times v_s}}$$

at P_s = 2,415 psia

t_s = 1,000°F

v_s = 0.3193

and P_t = 2,402 psia

t_t = 1,005°F

v_t = 0.3229

Copyright ASME International
Provided by IHS under license with ASME
No reproduction or networking permitted without license from IHS
Not for Resale

TABLE 8A.2
GROUP 1 CORRECTIONS

Variable	Heat Rate Factor	Load Factor
TTD – No. 7 feedwater heater	0.9998	0.9992
ELPD – No. 7 feedwater heater	0.9999	0.9998
Auxiliary stream extraction (station heating)	1.0040	0.9963
Reheat desuperheating flow	1.0036	1.0106
Throttle desuperheating flow	1.0009	1.0023
Condensate subcooling	1.0001	0.9999
BFPT throttle flow extraction	1.0028	0.9972
Combined correction factor (product)	1.0109	1.0052

TABLE 8A.3
COMPARISON BETWEEN TEST CYCLE AND SPECIFIC CYCLE, GROUP 2 VARIABLES

Variable	Test Value	Specified Value	Change
Throttle pressure, psia	2,402	2,415	–13 psi
Throttle temperature, °F	1,005	1,000	+5.0°F
Reheat temperature, °F	992	1,000	–8.0°F
Reheater Δp, %	6.84	10.0	–3.16%
Exhaust pressure, in. Hg abs.	2.0	1.5	+0.5 in. Hg

$$w_{tc} = 3{,}460{,}991 \sqrt{\frac{2{,}415}{2{,}402} \times \frac{0.3229}{0.3193}}$$

$$= 3{,}489{,}853 \text{ lbm/hr}$$

8A.6.2 Comparison Between Test Cycle and Specific Cycle, Group 2 Variables. Table 8A.3 shows the deviations of Group 2 variables in the cycle as tested from those specified.

8A.6.3 Summary of Group 2 Corrections. Figures 8.9 through 8.13 from Section 8 were used with the information from para. 8A.6.1 to obtain the correction factors shown in Table 8A.4. The combined correction factors were found by multiplying the individual correction factors and rounding to the same number of significant figures.

8A.7 CALCULATION OF CORRECTED HEAT RATE

8A.7.1 The test cycle heat rate (para. 8A.4.2) is corrected for Group 1 and Group 2 variables by dividing by the combined heat rate correction factor from para. 8A.5.10 and the combined heat rate correction factor from para. 8A.6.3 as follows:

$$HR_c = \frac{HR_t}{CF_{Gr1} CF_{Gr2}}$$

$$= \frac{7{,}916}{1.0109 \times 0.9990}$$

$$= 7{,}838 \text{ Btu/kWhr } (8{,}270 \text{ kJ/kWh})$$

8A.8 CALCULATION OF CORRECTED LOAD

Measured generator output must be corrected for the effect of Group 1 and Group 2 variables to permit plotting the heat rate results for drawing the locus curve as discussed in Code para. 3.13.2.

8A.8.1 Output corrected for Group 1 and Group 2 corrections is determined by dividing the measured output corrected for power factor and hydrogen pressure (para. 8A.8.2) by the product of the correction factors due to Group 1 variables (para. 8A.5.10) and Group 2 variables (para. 8A.6.3), as follows:

Copyright ASME International
Provided by IHS under license with ASME
No reproduction or networking permitted without license from IHS
Not for Resale

TABLE 8A.4
GROUP 2 CORRECTIONS

Variable	Heat Rate Factor	Load Factor
Throttle pressure (Fig. 8.9)	1.0002	0.9948
Throttle temperature (Fig. 8.10)	0.9992	0.9996
Reheat temperature (Fig. 8.11)	1.0011	0.9963
Reheater Δp (Fig. 8.12)	0.9968	1.0080
Exhaust pressure (Fig. 8.13)	1.0017	0.9983
Combined correction factor (product of correction factors)	0.9990	0.9970

$$kW_c = \frac{kW}{CF_{Gr1}CF_{Gr2}}$$

$$= \frac{526{,}135}{1.0052 \times 0.9970}$$

$$kW_c = 524{,}988$$

8A.8.2 Comparison to Guarantee. Corrected heat rate, para. 8A.7.1, is plotted versus the corrected output, para. 8A.8.1. The corrected heat rate is compared to the heat rate from the guarantee heat rate curve provided by the manufacturer. When tests are run at other valve points, a curve can be drawn through each test point and the curve represents the test locus of valve points. Heat rate is read at the specified load. See Fig. 8.15.

8A.9 KEY TO FIG. 8A.1

W = flow, lbm/hr
P = pressure, psia
F = temperature, °F
h = enthalpy, Btu/lbm
M = measured water flow

1 = No. 2 valve stem leakoff
2 = No. 1 gland low pressure leakoff
3 = No. 1 gland high pressure leakoff
4 = No. 3 gland low pressure leakoff
5 = main steam desuperheating water
6 = reheat steam desuperheating water
7 = gland seal steam; supplies four glands on main turbine shaft with equal flows and supplies each of two glands on the feedwater pump turbine with one-half the flow to the main turbine gland; therefore, a total of five glands
8 = gland seal return
9 = feedwater pump gland seal flow
10 = feedwater pump gland seal leakoff to condenser
11 = station heating steam flow return to condenser
A = No. 6 heater extraction
B = No. 5 heater extraction
C = No. 4 heater extraction
D = No. 3 heater extraction
E = No. 2 heater extraction
F = No. 1 heater extraction
G = steam jet air ejector steam

Copyright ASME International
Provided by IHS under license with ASME
No reproduction or networking permitted without license from IHS
Not for Resale

SECTION 9 — SAMPLE CALCULATION FOR A STEAM TURBINE OPERATING IN A NUCLEAR CYCLE[1]

9.1 DESCRIPTION OF UNIT

This sample calculation is for a 900,000 kW, tandem-compound, six-flow unit, with a regenerative cycle and external moisture separator reheater with superheated steam supplied from a nuclear steam supply system. Rated steam conditions are 900 psia and 575°F steam temperature with 1.0 in. Hg absolute exhaust pressure. The heat cycle contains two parallel strings of heaters, pumps, and piping. The generator is rated at 930,000 kVA, 0.99 power factor, and 60 psig hydrogen pressure.

It was mutually agreed that the heat rate comparison to specified conditions would be made at the specified load of 899,910 kW. The testing and all calculations are based on performance at valve points. The specified heat rate curve is given on Fig. 9.1.

9.2 DESCRIPTION OF TEST INSTRUMENTATION

9.2.1 Condensate flow was measured by means of three calibrated throat-tap flow nozzles located at the suction of the steam generator feedwater pumps. These flow nozzles were in parallel with two sets of taps measuring differential pressure on each nozzle. The total of these three measured flows was equal to the water flow to the steam generator, except for shaft-sealing flows at the feedwater pumps. Together, these flow measurements constitute the primary flow measurement. Feedwater heater leakage was checked using a tracer technique and found to be negligible.

9.2.2 Throttle steam moisture was not determined, because the throttle steam contained some superheat.

9.2.3 Radioactive sodium (^{24}Na) was used as the tracer in accordance with para. 4.19 of the Code to measure flows and enthalpies to the feedwater heaters that were not superheated. The tracer was also used to measure the drain flows from the moisture separator, both reheaters, and No. 1 feedwater heater, and to determine the enthalpy of the steam to the feedwater pump turbine.

[1] This sample calculation is for a full-scale test of a steam turbine operating in a nuclear cycle.

9.3 SUMMARY OF TEST DATA

The test cycle heat balance diagram, Fig. 9.2, shows measured and calculated flows and certain test measurements. Steam and water enthalpies derived from test data (not shown) and the 1967 ASME steam tables have also been entered. Calculations as shown in this example were done by the computer, and results will vary from manual methods because of rounding errors. The principal source of this difference between computer calculations and manual methods appears to be rounding off decimal places of steam table values used in conventional manual calculations compared to the large numbers of decimal places of steam table values carried along in computer computations. Caution should also be exercised in decimal place rounding when calculating the moisture removal effectiveness, E. Under some circumstances, more than two decimal places may be required for E to give correct results.

9.4 CALCULATION OF TURBINE PERFORMANCE AS TESTED

This calculation procedure is contained on pages 89–114.

9.4.1 Overall Considerations

(a) Summation of the condensate flow measurement, adjusted for feedwater pump shaft leakage flow, is as follows:

Flow	Rate, lbm/hr
Feedwater pump suction flow (measured)	10,789,254
Feedwater pump seal injection (measured)	+83,100
Feedwater pump seal return flow (measured)	−88,469
Final feedwater flow	10,783,885

Copyright ASME International
Provided by IHS under license with ASME
No reproduction or networking permitted without license from IHS
Not for Resale

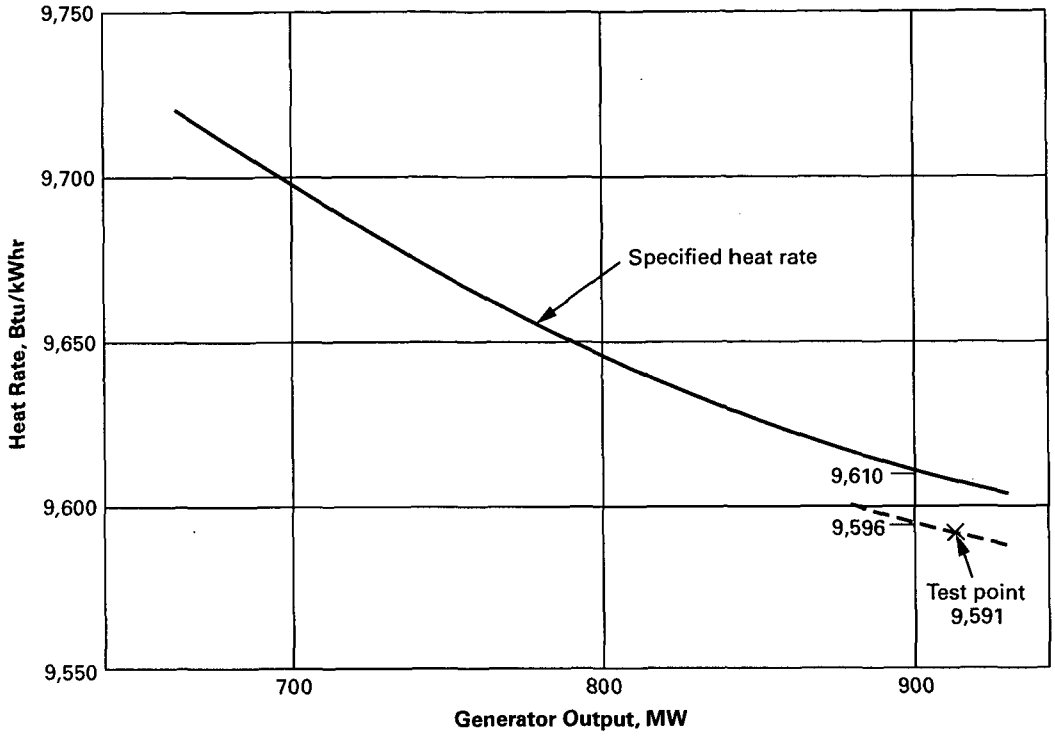

FIG. 9.1 SPECIFIED HEAT RATE CURVE

(b) The isolation of the system was checked by a water balance. Unaccounted-for losses from the system were assumed to have occurred between the feedwater system outlet and the steam turbine inlet. Steam generator level change was found to be zero.

Sum of storage changes and leakages is as follows:

Flow	Rate, lbm/hr
Steam generator storage	0
Hotwell storage (level fall)	−7,335
Condensate pump leakage	+1,675
No. 2 heater drain pump leakage	+2,749
No. 3 heater drain pump leakage	0
Unaccounted-for change in system storage	−2,911

(c) The total quantity of steam supplied to the turbine cycle was calculated as shown in the following tabulation:

Flow	Rate, lbm/hr
Final feedwater flow	10,783,885
Unaccounted for change in system storage	−2,911
Steam supplied to air ejectors	−1,304
Test total steam flow	10,779,670

Unaccounted-for leakage as percent of test total steam flow = (2,911/10,779,670) x 100 = 0.03%

This is less than the 0.1% leakage limit set in para. 3.5.3 of the Code.

(d) The throttle steam enthalpy, as determined from the measurement of steam pressure and temperature, was 1,255.1 Btu/lbm.

(e) The test heat rate, as specified for the test turbine cycle in this example, is defined as

$$\text{Heat rate} = \frac{w_1 h_1 - w_2 h_2}{\text{Generator output}}$$

where

w_1 = steam flow to turbine, lbm/hr
h_1 = enthalpy of steam supplied to turbine, Btu/lbm
w_2 = feedwater flow leaving No. 6 heater, lbm/hr
h_2 = enthalpy of feedwater leaving No. 6 heater, Btu/lbm

$$\text{Test heat rate} = \frac{10{,}779{,}670 \times 1{,}255.1 - 10{,}783{,}885 \times 441.0}{919{,}223}$$

$$= 9{,}544.9 \text{ Btu/kWhr}$$

$$(10{,}070.4 \text{ kJ/kWh})$$

Copyright ASME International
Provided by IHS under license with ASME
No reproduction or networking permitted without license from IHS
Not for Resale

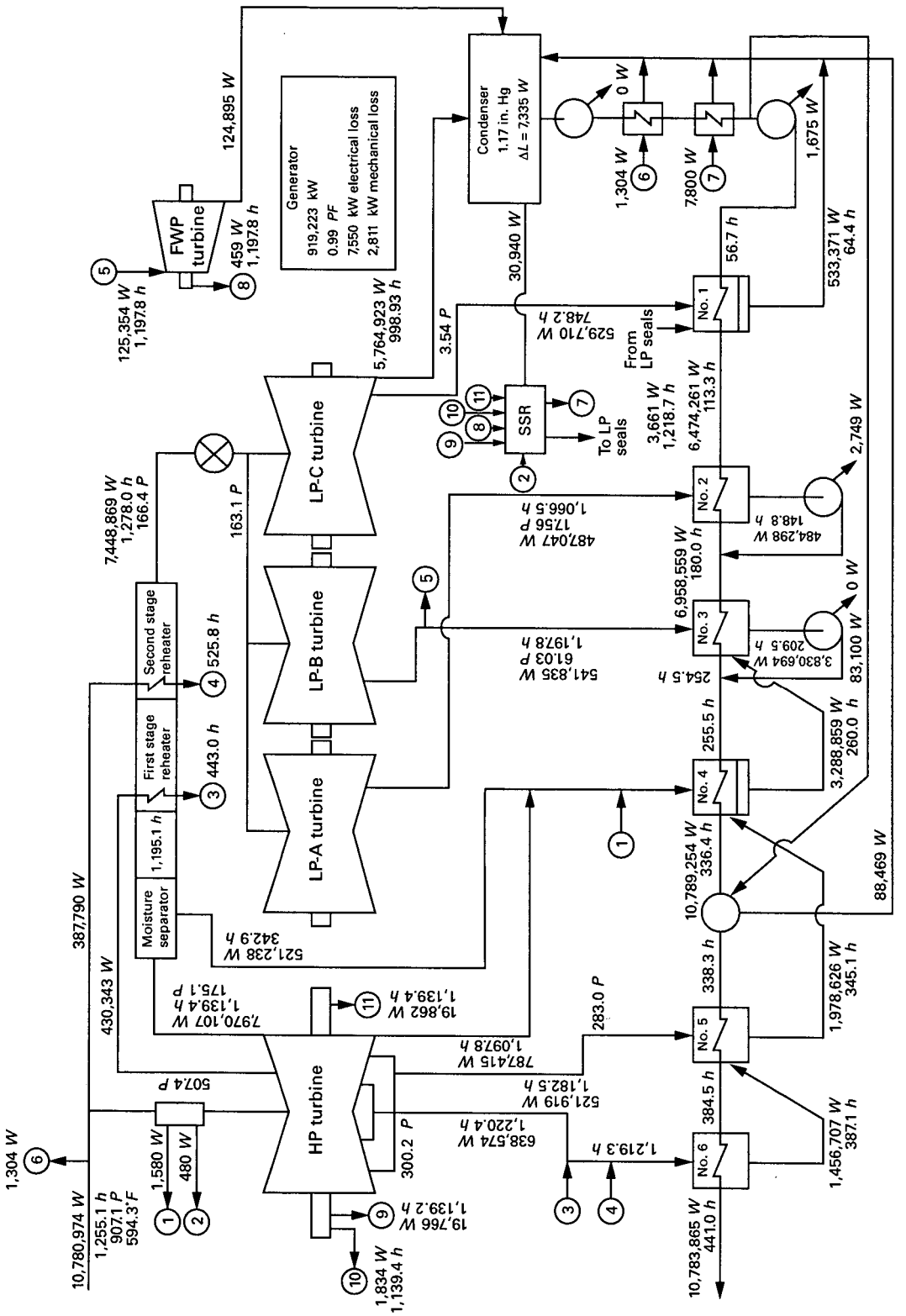

FIG. 9.2 TEST CYCLE DIAGRAM

GENERAL NOTE: Refer to para. 9.4.9.

Copyright ASME International
Provided by IHS under license with ASME
No reproduction or networking permitted without license from IHS
Not for Resale

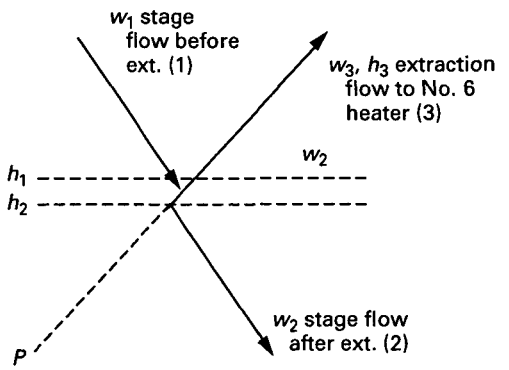

FIG. 9.3 EXPANSION LINE AND STEAM CONDITIONS LEAVING NO. 6 HEATER EXTRACTION STAGE POINT

9.4.2 Calculation of Extraction Flows and Enthalpies

9.4.2.1 No. 6 Heater Extraction and Drain Flow. The No. 6 heater extraction flow was calculated by heat balance, since the extraction steam was superheated. (See Fig. 9.3.) Drain flows from the first and second stage reheaters (w_{rh1} and w_{rh2}) were determined from water flow measurement by radioactive tracer technique. (See para. 9.4.2.6 for method.)

Heat balance for No. 6 heater. (See Fig. 9.4.)

$$w_{ext6} = \frac{w_{fo6}\,(h_{fo6} - h_{fi6}) - w_{rh1}\,(h_{rh1} - h_{d6}) - w_{rh2}\,(h_{rh2} - h_{d6})}{h_6 - h_{d6}}$$

where

w_{fo6} = final feedwater flow = 10,783,885 lbm/hr

$$w_{ext6} = \frac{10{,}783{,}885\,(441.0 - 384.5) - 430{,}343\,(443.0 - 387.1) - 387{,}790\,(525.8 - 387.1)}{1{,}219.3 - 387.1}$$

= 638,574 lbm/hr by computer calculation

Drain flow from No. 6 heater

$$w_{d6} = w_{ext6} + w_{rh1} + w_{rh2}$$
$$= 638{,}574 + 430{,}343 + 387{,}790$$
$$= 1{,}456{,}707 \text{ lbm/hr}$$

9.4.2.2 No. 5 Heater Extraction Flow and Enthalpy

(a) The tracer technique was used to determine the No. 5 heater extraction moisture. The following example shows the method of calculation for this heater and is referenced to illustrate the method for other heaters.

Calculation of mass flow rate of water in the steam mixture in accordance with para. 4.19.1.6 of the Code:

(1) Measured

(a) Before Injection

C_o = 0.0724 counts/min-lbm

(b) During Injection

w_{inj} = 9.32 lbm/hr
C_{inj} = 77,933.900 counts/min-lbm
C_w = 56.941 counts/min-lbm

Copyright ASME International
Provided by IHS under license with ASME
No reproduction or networking permitted without license from IHS
Not for Resale

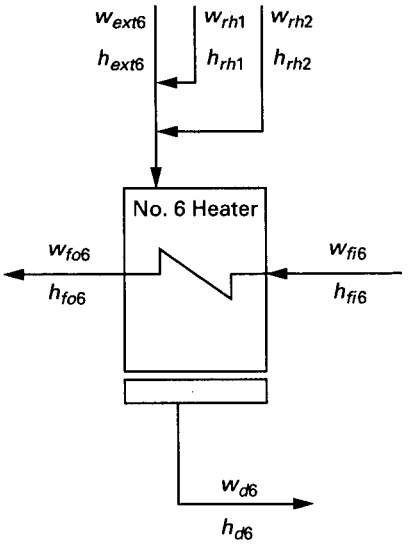

FIG. 9.4 NO. 6 HEATER EXTRACTION FLOW AND ENTHALPY

t_{inj} = 72.0°F
P_{ext5} = 283.0 psia

(2) Calculated

$$D_w = \frac{w_{inj}\,(h_f - h_{inj})}{h_{fg}}$$

h_f = 388.2 Btu/lbm (saturated water from steam tables at 283.0 psia) (h_{w5})
h_{fg} = 814.2 Btu/lbm
h_{inj} = 40.0 Btu/lbm

$$D_w = \frac{9.32\,(388.2 - 40.0)}{814.2} = 3.99 \text{ lbm/hr}$$

Then solve for w_{w5}, the mass flow rate of water in the steam/water mixture at the sampling point, using the equation in para 4.19.1.6 in of the Code.

$$w_{w5} = \frac{w_{inj}\,(C_{inj} - C_w) - D_w\,C_w}{C_w - C_o}$$

$$w_{w5} = \frac{9.32\,(77{,}933.900 - 56.941) - 3.99 \times 56.941}{56.941 - 0.0724}$$

= 12,759 lbm/hr moisture

(b) No. 5 heater extraction flow and enthalpy were calculated by heat balance. (See Fig. 9.5.)

$$w_{s5} = \frac{w_{fo5}\,(h_{fo5} - h_{fi5}) - w_{w5}\,(h_{w5} - h_{d5}) - w_{d6}\,(h_{d6} - h_{d5})}{h_{s5} - h_{d5}}$$

where

$w_{fo5} = w_{fi6} = w_{fo6}$ = 10,783,885 lbm/hr

h_{s5} = 1,202.4 Btu/lbm (saturated steam at 283.0 psia)

$$w_{s5} = \frac{10{,}783{,}885\,(384.5 - 338.3) - 12{,}759\,(388.2 - 345.1) - 1{,}456{,}707\,(387.1 - 345.1)}{1{,}202.4 - 345.1}$$

= 509,160 lbm/hr by computer calculation

$w_{ext5} = w_{s5} + w_{w5}$ = 509,160 + 12,759

= 521,919 lbm/hr

Copyright ASME International
Provided by IHS under license with ASME
No reproduction or networking permitted without license from IHS
Not for Resale

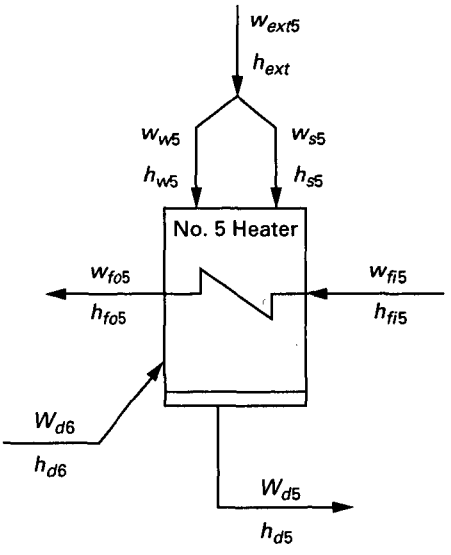

FIG. 9.5 NO. 5 HEATER EXTRACTION FLOW AND ENTHALPY

Enthalpy of steam mixture entering No. 5 heater:

$$h_{ext5} = \frac{(w_{s5} \times h_{s5}) + (w_{w5} \times h_{w5})}{w_{ext5}}$$

$$= \frac{(509{,}160 \times 1{,}202.4) + (12{,}759 \times 388.2)}{521{,}919}$$

$$= 1{,}182.5 \text{ Btu/lbm}$$

Drain flow from No. 5 heater:

$$w_{d5} = w_{d6} + w_{ext5}$$

$$= 1{,}456{,}707 + 521{,}919$$

$$= 1{,}978{,}626 \text{ lbm/hr}$$

9.4.2.3 No. 4 Heater Extraction Flow and Enthalpy. No. 4 heater extraction flow and enthalpy were calculated by heat balances. (See Fig. 9.6.) First, the tracer technique was used to determine the No. 4 heater extraction moisture. The method used to determine the moisture was the same as shown in para. 9.4.2.2(a) and is not shown for No. 4 heater.

$$w_{s4} = \frac{w_{fo4}\,(h_{fo4} - h_{fi4}) - w_{d5}\,(h_{d5} - h_{d4}) - w_{cvlo}\,(h_{cvlo} - h_{d4}) - w_{msd}\,(h_{msd} - h_{d4}) - w_{w4}\,(h_{w4} - h_{d4})}{h_{s4} - h_{d4}}$$

where

w_{fo4} = 10,789,254 lbm/hr (measured) w_{msd} and h_{msd} were calculated using radioactive tracer measurement data from the moisture separator drain lines. (Sample is not shown for this calculation; see para. 9.4.2.6 for tracer method.)

w_{w4} = 90,781 lbm/hr (by radioactive tracer; see para. 9.4.2.2(a) for tracer method)

h_{s4} = 1,196.2 Btu/lbm (saturated steam at 172.4 psia from steam tables)

h_{w4} = 342.4 Btu/lbm (saturated water at 172.4 psia from steam tables)

$$W_{s4} = \frac{[10{,}789{,}254\,(336.4 - 255.5) - 1{,}978{,}626\,(345.1 - 260.0) - 1{,}580\,(1{,}255.1 - 260.0) - 521{,}238(342.9 - 260.0) - 90{,}781\,(342.4 - 260.0)]}{1{,}196.2 - 260.0}$$

$$= 696{,}634 \text{ lbm/hr}$$

$$w_{ext4} = w_{s4} + w_{w4}$$

$$= 696{,}634 + 90{,}781$$

$$= 787{,}415 \text{ lbm/hr}$$

Copyright ASME International
Provided by IHS under license with ASME
No reproduction or networking permitted without license from IHS
Not for Resale

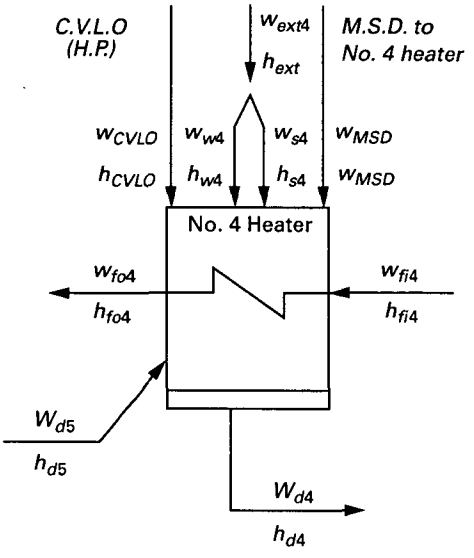

FIG. 9.6 NO. 4 HEATER EXTRACTION FLOW AND ENTHALPY

$$h_{ext4} = \frac{(w_{s4} \times h_{s4}) + (w_{w4} \times h_{w4})}{w_{ext4}}$$

$$= \frac{(696{,}634 \times 1{,}196.2) + (90{,}781 \times 342.4)}{787{,}415}$$

$$= 1{,}097.8 \text{ Btu/lbm}$$

Drain Flow from No. 4 Heater:

$$w_{d4} = w_{d5} + w_{msd} + w_{ext4} + w_{cvlo}$$

$$= 1{,}978{,}626 + 521{,}238 + 787{,}415 + 1{,}580$$

$$= 3{,}288{,}859 \text{ lbm/hr}$$

9.4.2.4 No. 3 Heater Extraction Flow. The No. 3 heater extraction flow was calculated by heat balance, because extraction steam was superheated. (See Fig. 9.7.)

$$w_3 = \frac{w_{fi4}\,(h_{i4} - h_{fi3}) - w_{d3}\,(h_{d4} - h_{fi3})}{h_3 - h_{fi3}}$$

where

$$w_{fi4} = w_{fo4} = 10{,}789{,}254 \text{ lbm/hr}$$

$$w_3 = \frac{10{,}789{,}254\,(255.5 - 180.0) - 3{,}288{,}859\,(260.0 - 180.0)}{1{,}197.8 - 180.0}$$

$$= 541{,}835 \text{ lbm/hr}$$

$$w_{ext3} = w_3 + \text{measured steam supply to feedwater pump turbine}$$

$$= 541{,}835 + 125{,}354$$

$$= 667{,}189 \text{ lbm/hr}$$

$$w_{fi3} = w_{fi4} - w_{d4} - w_3$$

$$= 10{,}789{,}254 - 3{,}288{,}859 - 541{,}835$$

$$= 6{,}958{,}559 \text{ lbm/hr}$$

9.4.2.5 No. 2 Heater Extraction Flow and Enthalpy. No. 2 heater extraction flow and enthalpy were calculated by heat balances (See Fig. 9.8.) First, the radioactive tracer technique was used to determine the No. 2 heater extraction moisture (w_{w2}) and enthalpy (h_{w2}). The method used to determine

Copyright ASME International
Provided by IHS under license with ASME
No reproduction or networking permitted without license from IHS
Not for Resale

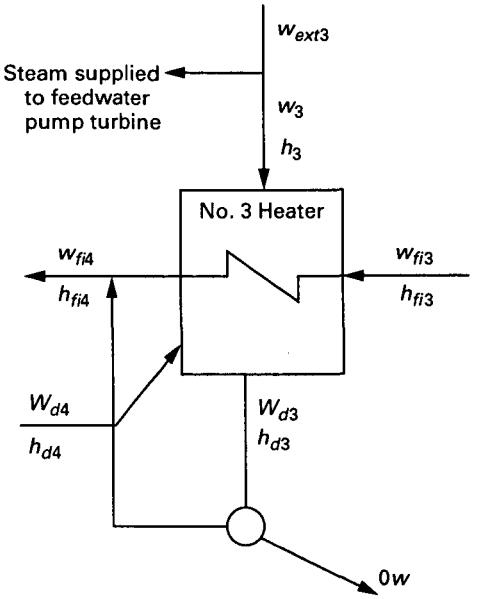

FIG. 9.7 NO. 3 HEATER EXTRACTION FLOW

the moisture and enthalpy was the same as shown in para. 9.4.2.2(a) and is not shown for No. 2 heater.

Calculate saturated steam to heater

$$w_{s2} = \frac{w_{co2}\,(h_{co2} - h_{ci2}) - w_{w2}\,(h_{w2} - h_{ci2}) + w_{d2}\,(h_{d2} - h_{ci2})}{h_{s2} - h_{ci2}}$$

where

$w_{co2} = w_{fi3} = 6{,}958{,}559$ lbm/hr
$w_{w2} = 43{,}009$ lbm/hr (by radioactive tracer)
$h_{s2} = 1{,}151.9$ Btu/lbm (saturated steam at 15.87 psia from steam tables)
$h_{w2} = 184.1$ Btu/lbm (saturated water at 15.87 psia from steam tables)

$$w_{s2} = \frac{6{,}958{,}559\,(180.0 - 113.3) - 43{,}009\,(184.1 - 113.3) + 2{,}749\,(148.8 - 113.3)}{1{,}151.9 - 113.3}$$

$$= 444{,}038 \text{ lbm/hr}$$

Calculate total extraction flow and enthalpy (water and steam moisture)

$$w_{ext2} = w_{s2} + w_{w2}$$
$$= 444{,}038 + 43{,}009$$
$$= 487{,}047 \text{ lbm/hr}$$

$$h_{ext2} = \frac{(w_s \times h_s) + (w_w \times h_w)}{w_{ext2}}$$
$$= \frac{(444{,}038 \times 1{,}151.9) + (43{,}009 \times 184.1)}{487{,}047}$$
$$= 1{,}066.5 \text{ Btu/lbm}$$

$$w_{ci2} = w_{co2} - w_{ext2} + w_{d2}$$
$$= 6{,}958{,}559 - 487{,}047 + 2{,}749$$
$$= 6{,}474{,}261 \text{ lbm/hr}$$

9.4.2.6 No. 1 Heater Extraction Flow and Enthalpy

(a) The tracer technique was used in the heater drain line to measure drain flow directly. This example applying to heater No. 1 was based on radioactive tracer injection and sampling in the drain line using ^{24}Na in accordance with para. 4.19.1.6 of the Code.

(1) Measured

(a) Before Injection

$C_o = 0.025$ counts/min-lbm

(b) During Injection

$w_{inj} = 14.0$ lbm/hr
$C_{inj} = 75{,}054.9$ counts/min-lbm
$w = 1.995$ counts/min-lbm

Copyright ASME International
Provided by IHS under license with ASME
No reproduction or networking permitted without license from IHS
Not for Resale

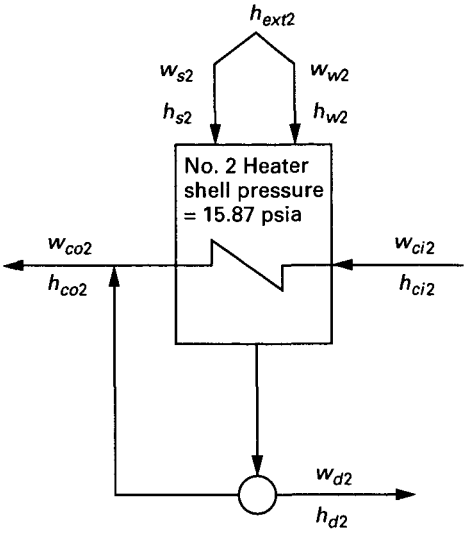

FIG. 9.8 NO. 2 HEATER EXTRACTION FLOW AND ENTHALPY

where

w_{d1} = heater drain flow

(2) Calculated

$$w_{d1}\,C_o + w_{inj}\,C_{inj} = (w_{d1} + w_{inj})\,C_w$$

$$w_{d1} = \frac{w_{inj}\,(C_{inj} - C_w)}{C_w - C_o}$$

$$= \frac{14.0\,(75{,}054.9 - 1.995)}{1.995 - 0.025}$$

$$= 533{,}371 \text{ lbm/hr}$$

An alternate method to determine extraction flows is the heater drain flow method described in para. 4.16.2 of the Code.

(b) Calculation of Extraction Flow and Steam Conditions at No. 1 Heater (See Fig. 9.9)

w_{ext1} = Total extraction flow

$$w_{ext1} = w_{d1} - w_{ss}$$

where

w_{d1} = 533,371 lbm/hr (by radioactive tracer)
w_{ss} = 3,661 lbm/hr (steam seals)
w_{ext1} = 533,371 − 3,661 = 529,710 lbm/hr
h_{ext1} = enthalpy of steam and water mixture in extraction

$$h_{ext1} = \frac{w_{co1}\,(h_{co1} - h_{ci1}) - w_{ss}\,(h_{ss} - h_{d1}) + w_{ext1}\,(h_{d1})}{w_{ext1}}$$

$$w_{co1} = w_{ci2} = 6{,}474{,}261 \text{ lbm/hr}$$

$$h_{ext1} = \frac{6{,}474{,}261\,(113.3 - 56.7) - 3{,}661\,(1{,}218.7 - 64.4) + 529{,}710\,(64.4)}{529{,}710}$$

$$= 748.2 \text{ Btu/lbm}$$

9.4.3 Calculation of Steam Flow to Moisture Separator Reheater. (See Fig. 9.10.)

(a) The high pressure turbine exhaust flow going to the moisture separator reheater was determined by a mass balance around the high pressure turbine as follows:

Stream	Rate, lbm/hr
Steam flow supplied to the turbine cycle	10,779,670
Control valve leakoff flow (high pressure)	−1,580
Control valve leakoff flow (low pressure)	−408
Heating steam flow to second stage reheaters	−387,790
No. 1 shaft packing leakoff	−19,766
No. 2 shaft packing leakoff	−19,862
No. 1 gland seal leakoff	−917
No. 2 gland seal leakoff	−917
Heating steam flow to first stage reheaters	−430,343
No. 6 heater extraction flow	−638,574
No. 5 heater extraction flow	−521,919
No. 4 heater extraction flow	−787,415
Steam flow to moisture separator (w_2)	7,970,107

Copyright ASME International
Provided by IHS under license with ASME
No reproduction or networking permitted without license from IHS
Not for Resale

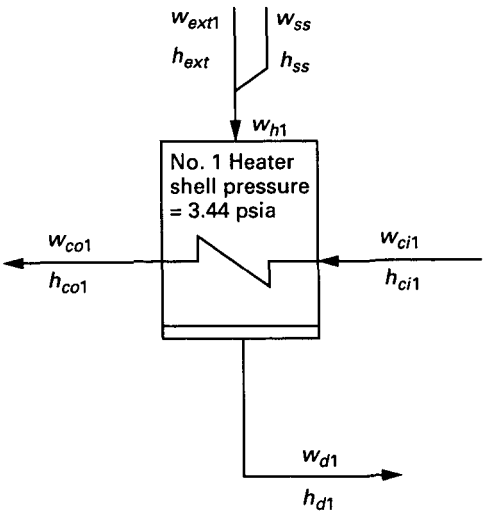

FIG. 9.9 NO. 1 HEATER EXTRACTION FLOW

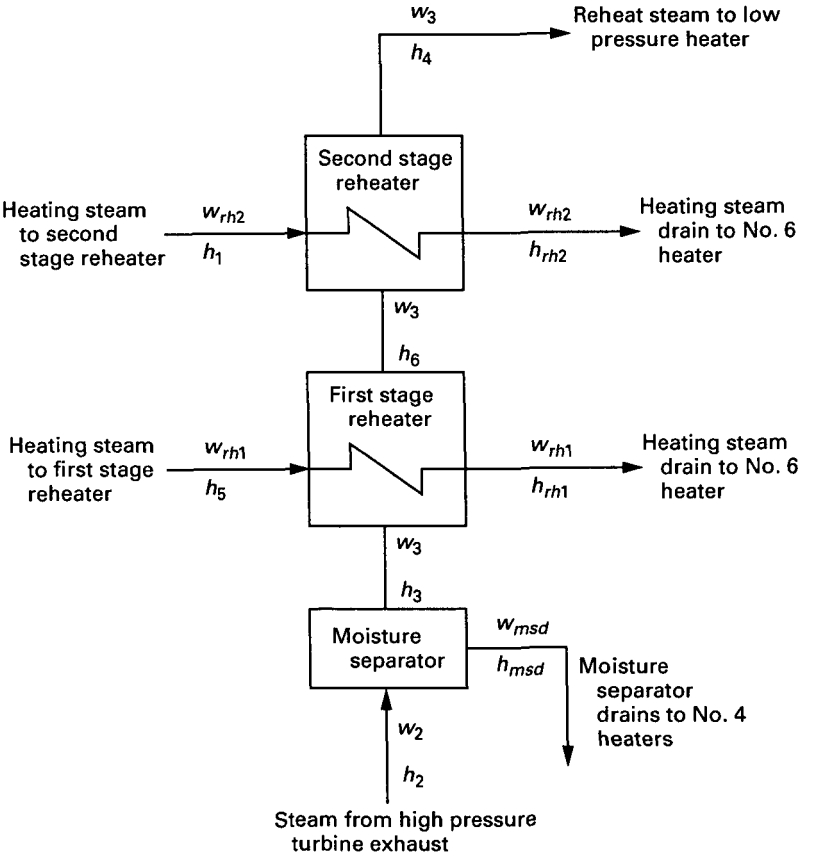

FIG. 9.10 STEAM FLOW TO MOISTURE SEPARATOR REHEATER

Copyright ASME International
Provided by IHS under license with ASME
No reproduction or networking permitted without license from IHS
Not for Resale

(b) The reheater steam flow was calculated by subtracting the moisture separator drain flow measured by radioactive tracer (see para 9.4.2.6(a) for method).

Stream	Rate, lbm/hr
Steam flow to moisture separator (w_2)	7,970,107
Moisture separator drain flow (w_{msd})	−521,238
Reheater steam flow (w_3)	7,448,869

(c) The enthalpy of steam entering the first stage reheater (h_3) was calculated from heat and mass balances around each component as follows (see Fig. 9.10 for key):

$$w_{rh2}h_1 + w_3h_3 + w_{rh1}h_5 = w_3h_4 + w_{rh2}h_{rh2} + w_{rh1}h_{rh1} \text{ (heat balance around MSR)}$$

$$w_3 = w_2 - w_{msd} \text{ (mass balance around MS)}$$

$$w_2h_2 = w_3h_3 + w_{msd}h_{msd} \text{ (heat balance around MS)}$$

Solving Eq. 1 for h_3, enthalpy of steam entering the first stage reheater.

$$h_3 = h_4 - \frac{w_{rh2}\,(h_1 - h_{rh2}) + w_{rh1}\,(h_5 - h_{rh1})}{w_3}$$

$$h_3 = 1{,}278.0 - \frac{387{,}790\,(1{,}255.1 - 525.8) + 430{,}343\,(1{,}220.4 - 443.0)}{7{,}448{,}869}$$

$$h_3 = 1{,}195.1 \text{ Btu/lbm}$$

NOTE: In this example h_5 is superheated. This gives moisture separator leaving moisture (moisture carryover) of 0.12% at 171.6 psia (at 2% pressure drop from high pressure turbine exhaust pressure of 175.1 psia to moisture separator) and 1,195.1 Btu/lbm from steam tables.

Solving Eq. (3) for h_2, enthalpy of steam entering moisture-separator:

$$h_2 = \frac{w_3h_3 + w_{msd}\,h_{msd}}{w_2}$$

$$h_2 = \frac{7{,}448{,}869 \times 1{,}195.1 + 521{,}238 \times 342.9}{7{,}970{,}107}$$

$$= 1{,}139.4 \text{ Btu/lbm}$$

The enthalpy of steam going to the moisture separator (h_2) is higher than the enthalpy of the extraction to No. 4 heater due to physical arrangement of the piping, which caused a greater proportion of moisture in the steam-moisture mixture to separate out into the No. 4 heater extraction.

The enthalpy of steam entering the second stage reheater (h_6) was calculated from heat and mass balances around first stage reheater as follows (see Fig. 9.10 for key):

$$w_3\,(h_6 - h_3) = w_{rh1}\,(h_5 - h_{rh1})$$

$$h_6 = h_3 + \frac{w_{rh1}\,(h_5 - h_{rh1})}{w_3}$$

$$h_6 = 1{,}195.1 + \frac{430{,}343 \times (1{,}220.4 - 443.0)}{7{,}970{,}107}$$

$$= 1{,}240.0 \text{ Btu/lbm}$$

This gives a first stage reheater leaving temperature of 441.7°F at 169.8 psia (at 5% pressure drop from high pressure turbine exhaust pressure of 175.1 psia to first stage reheater outlet) and 1,240.0 Btu/lbm from steam tables.

(d) Calculation of First Stage Reheater Terminal Temperature Difference

Heating steam pressure at reheater (at 5% pressure drop from high pressure turbine extraction pressure of 507.4 psia to reheater)	= 482.0 psia
Heating steam saturation temperature (from steam tables at 482.0 psia)	= 463.3°F
First stage terminal temperature difference	= 463.3 − 441.7 = 21.6°F

(e) Calculation of Second Stage Reheater Terminal Temperature Difference. Steam conditions leaving second stage reheater from the test data are as follows:

Pressure	= 166.4 psia
Temperature	= 510.1 °F
Enthalpy (at 166.4 psia and 510.1°F)	= 1,278.0 Btu/lbm
Heating steam pressure at reheater (at 2% pressure drop from throttle steam pressure of 907.1 psia to reheater)	= 889.0 psia
Heating steam saturation temperature (from steam tables at 889.0 psia)	= 530.5 °F
Second stage terminal temperature difference	= 530.5 − 510.1 = 20.4°F

Copyright ASME International
Provided by IHS under license with ASME
No reproduction or networking permitted without license from IHS
Not for Resale

TABLE 9.1
CALCULATION OF LOW PRESSURE TURBINE EXHAUST ENTHALPY

Parameter	Flow, lbm/hr	Enthalpy, Btu/lbm	Heat Flow, Btu/hr
Heat In			
Main steam	10,779,670	1,255.1	13,529,563,817
Total heat in			13,529,563,817
Heat Out			
Control valve leakoff (high pressure)	1,580	1,255.1	1,983,058
Extraction to No. 6 heater	638,574	1,220.4	779,315,710
Extraction to No. 5 heater	521,919	1,182.5	617,169,218
Extraction to No. 4 heater	787,415	1,097.8	864,424,187
Moisture separator drains to No. 4 heater	521,238	342.9	178,732,510
First stage reheater drains to No. 6 heater	430,343	443.0	190,641,949
Second stage reheater drains to No. 6 heater	387,790	525.8	203,899,982
Extraction to No. 3 heater	541,835	1,197.8	649,009,963
Steam to feedwater pump turbine	125,354	1,197.8	150,149,021
Extraction to No. 2 heater	487,047	1,066.5	519,435,626
Extraction to No. 1 heater	529,710	748.2	396,329,022
Control valve leakoff (low pressure)	480	1,255.1	602,448
No. 1 shaft packing leakoff	19,766	1,139.4	22,521,380
No. 2 shaft packing leakoff	19,862	1,139.4	22,630,763
No. 1 gland seal leakoff	917	1,139.4	1,044,830
No. 2 gland seal leakoff	917	1,139.4	1,044,830

	Power, kw	Thermal Equivalent	Heat Flow, Btu/hr
Generator output	919,223	3,412.14	3,136,517,567
Generator electrical losses	7,550	3,412.14	25,761,657
Mechanical losses	2,811	3,412.14	9,591,526
Total Heat Out	...	...	7,770,805,206

GENERAL NOTE:

$$\text{Net heat} = \text{heat in} - \text{heat out} = 13{,}529{,}563{,}817 - 7{,}770{,}805{,}206$$
$$= 5{,}758{,}758{,}611 \text{ Btu/lbm}$$
$$\text{Exhaust enthalpy} = \text{net heat/exhaust steam from low pressure turbine}$$
$$\text{Exhaust enthalpy} = \frac{5{,}758{,}758{,}611}{5{,}764{,}923} = 998.93 \text{ Btu/lbm}$$

9.4.4 Determination of Low Pressure Turbine Exhaust Flow. The low pressure turbine exhaust flow was determined as follows:

Flow	Rate, lbm/hr
Reheater steam flow to low pressure turbine	7,448,869
No. 3 heater extraction flow	−541,835
No. 2 heater extraction flow	−487,047
No. 1 heater extraction flow	−529,710
Steam to feedwater pump turbine	−125,354
Exhaust flow from low pressure turbine	5,764,923

9.4.5 Calculation of Low Pressure Turbine Exhaust Enthalpy. The enthalpy of the low pressure turbine exhaust flow was determined by means of an energy balance around the turbine-generator system. See Table 9.1.

9.4.6 Turbine Expansion-Line End Point. The expansion-line end point (ELEP) is the low pressure turbine end point (TEP) less the exhaust loss. Because the exhaust loss is a function of the specific volume at the expansion-line end point, an iterative procedure is required, first for estimating the exhaust loss.

Low pressure turbine exhaust enthalpy	998.93 Btu/lbm
Estimated exhaust loss	−28.40 Btu/lbm
Trial expansion-line end point	970.53 Btu/lbm
Exhaust pressure	1.17 in. Hga
Moisture, M	0.1219
Specific volume, v = 562.47(1.0-0.1219)	493.90 ft^3/lbm
Annulus area, A, per end (6 ends)	105.7 ft^2

Copyright ASME International
Provided by IHS under license with ASME
No reproduction or networking permitted without license from IHS
Not for Resale

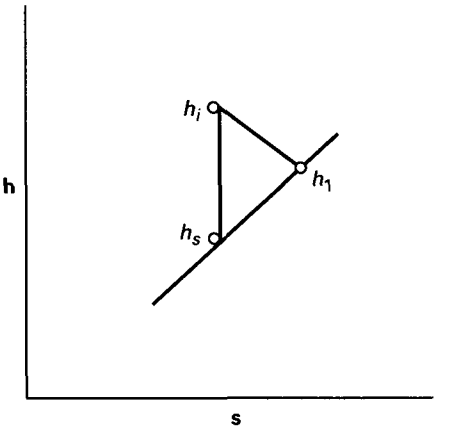

FIG. 9.11 NOMENCLATURE FOR HIGH PRESSURE TURBINE EXPANSION

Therefore,

$$\text{Annulus velocity} = \frac{1}{6} \times \frac{(wv)}{3600A}$$

$$= \frac{1}{6} \times \frac{(5{,}764{,}923 \times 493.90)}{3600 \times 105.7}$$

$$= 1{,}247.1 \text{ ft/s}$$

$$\text{Dry exhaust loss (from manufacturer's curve)} = 40.38 \text{ Btu/lbm}$$

$$\text{Actual exhaust loss} = (\text{Dry exhaust loss})(0.87)(1 - M)(1 - 0.65M)$$

$$= 40.38 \times 0.87 (1 - 0.1219) \times (1 - 0.65 \times 0.1219)$$

$$= 28.40 \text{ Btu/lbm}$$

$$\text{Expansion line end point} = 998.93 - 28.40$$

$$= 970.53 \text{ Btu/lbm}$$

Because the calculated expansion-line end point agrees within 1.0 Btu/lbm based on the estimated exhaust loss, no further iterations are necessary. If agreement had not been reached, a new exhaust loss would have been estimated with successive iterations until agreement was reached.

Some exhaust loss curves are drawn as a function of exhaust volumetric flow; others as a function of annulus velocity, as shown in this example. The equation to calculate actual exhaust loss may also be different from that shown in this example and is normally shown on the exhaust loss curve.

9.4.7 Calculation of Turbine Expansion Line: Test Cycle. The following calculations indicate the methods and techniques used to determine the test turbine expansion line on an extraction stage by stage basis, which will be used later to determine the Group 1 corrections.

9.4.7.1 Test High Pressure Turbine Expansion. The test high pressure turbine expansion is calculated based on blading inlet steam conditions and a reasonable assumed dry basis turbine efficiency throughout the high pressure turbine expansion. The same dry basis efficiency must be used for both the test cycle and specified cycle calculations. For nomenclature, see Fig. 9.11.

9.4.7.1.1 High Pressure Turbine Expansion Initial Conditions

	High Pressure Turbine	
	Main Steam	HP Blading Inlet
Pressure, psia	907.1	889.0 (907.1 × 0.98) Used 2% pressure drop through throttle and control valves
Enthalpy, Btu/lbm	1,255.1	1,255.1
Entropy, Btu/lbm°R	1.45998	1.46183

GENERAL NOTE: Assumption: High pressure turbine efficiency – dry basis = 87.05%. This assumption is checked in para. 9.4.7.1.1(g).

Copyright ASME International
Provided by IHS under license with ASME
No reproduction or networking permitted without license from IHS
Not for Resale

(a) Calculation of Expansion Line Condition From HP Blading Inlet to No. 6 Heater Extraction Stage Entering Conditions

	Steam Path Points	
	HP Blading Inlet	No. 6 Heater
Pressure, psia	889.0	507.4
Enthalpy, Btu/lbm	1,255.1 (h_i)	h_1
Entropy, Btu/lbm°R	1.46183	...
Moisture	0.0	...

Turbine section efficiency – dry basis = 87.05%

$$\text{Efficiency} = \frac{h_i - h_1}{h_i - h_s}$$

h_s = 1,204.0 Btu/lbm at 507.4 psia and

s = 1.46183 Btu/lbm°R from the steam tables

$$0.8705 = \frac{1{,}255.1 - h_1}{1{,}255.1 - 1{,}204.0}$$

$$h_1 = 1{,}210.6 \text{ Btu/lbm}$$

This value puts the extraction point in the superheated region at 507.4 psia and 1,210.6 Btu/lbm from the steam tables.

(b) Calculation of Expansion Line and Steam Conditions Leaving No. 6 Heater Extraction Stage Point (See Fig. 9.3)

(1) Known

Pressure = 507.4 psia

w_1 = Flow upstream of heater No. 6 extraction zone
= Test throttle flow to turbine – second stage moisture separator reheater flow – control valve leakoff (high pressure) flow – control valve leakoff (low pressure) flow
= 10,779,670 – 387,790 – 1,580 – 480
= 10,389,820 lbm/hr

h_1 = 1,210.6 Btu/lbm [see para. 9.4.7.1.1(a)]

w_{ext6} = 638,574 lbm/hr (see para. 9.4.2.1)

h_{ext6} = 1,220.4 Btu/lbm

w_{rh1} = 430,343 lbm/hr [see para. 9.4.3(a)]

h_{rh1} = 1,220.4 Btu/lbm

(2) Calculations

w_2 = Flow following heater No. 6 extraction
$= w_1 - w_{ext6} - w_{rh1}$ (mass balance)
= 10,389,820 – 638,574 – 430,343
= 9,320,903 lbm/hr

$w_1 \times h_1 = (w_2 \times h_2) + (w_{ext6} \times h_{ext6}) + (w_{rh1} \times h_{rh1})$ (energy balance)

$$h_2 = \frac{10{,}389{,}820 \times 1{,}210.6) - (638{,}574 \times 1{,}220.4) - (430{,}343 \times 1{,}220.4)}{9{,}320{,}903}$$

= 1,209.5 Btu/lbm

(c) Calculation of Steam Conditions Where Expansion Line Crosses Saturation Line. Assume 476.2 psia at the crossing point, which gives h_s = 1,204.05 Btu/lbm at 476.2 psia and s = 1.46773 Btu/lbm°R from steam tables.

$$\text{Efficiency} = \frac{h_i - h_o}{h_i - h_s}$$

$$0.8705 = \frac{1{,}209.5 - h_o}{1{,}209.5 - 1{,}204.05}$$

$$h_o = 1{,}204.8 \text{ Btu/lbm}$$

This point in the steam tables agrees with the assumed pressure of 476.2 psia. If agreement had not been reached a new pressure would have been assumed with successive iterations.

(d) Expansion Line Condition From Saturation Line to No. 5 Extraction Stage Entering Conditions

	Steam Path Points	
	Saturation Line	No. 5 Heater
Pressure, psia	476.2	300.2
Enthalpy, Btu/lbm	1,204.8 (h_i)	h_1
Entropy, Btu/lbm°R	1.4685	...
Moisture	0.0	...

Turbine section efficiency – dry basis = 87.05%

h_s = 1,166.1 Btu/lbm at 300.2 psia and s = 1.4685 Btu/lbm°R from steam tables

$$0.8705 = \frac{1{,}204.8 - h_1}{1{,}204.8 - 1{,}166.1}$$

$$h_1 = 1{,}171.1 \text{ Btu/lbm (dry basis)}$$

This value gives extraction point entering moisture M_1 = 0.0393 at 300.2 psia and 1,171.1 Btu/lbm from steam tables.

Copyright ASME International
Provided by IHS under license with ASME
No reproduction or networking permitted without license from IHS
Not for Resale

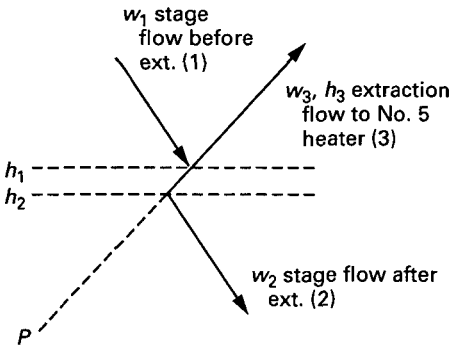

FIG. 9.12 EXPANSION LINE AND STEAM CONDITIONS LEAVING NO. 5 HEATER EXTRACTION STAGE POINT

$$\text{Turbine section average moisture} = \frac{M_0 + M_1}{2}$$

$$= \frac{0 + 0.0393}{2}$$

$$= 0.01965$$

where

M_0 = moisture at saturation line

Correction factor to turbine section efficiency for average moisture

$$= 1.00 - 0.01965$$

$$= 0.98035$$

Corrected turbine section efficiency (wet basis)

$$= 87.05 \times 0.98035$$

$$= 85.34\%$$

First iteration to recalculate extraction point entering enthalpy, using corrected turbine section efficiency (wet basis)

$$0.8534 = \frac{1{,}204.8 - h_i}{1{,}204.8 - 1{,}166.1}$$

$$h_1 = 1{,}171.8 \text{ Btu/lbm}$$

This value gives extraction point entering moisture $M_1 = 0.0384$ at 300.2 psia and 1,171.8 Btu/lbm from steam tables.

Successive iterations using M_1 were made until resulting moisture differences were 0.01%, which resulted in

$$h_1 = 1{,}171.7 \text{ Btu/lbm}$$

$$M_1 = 0.0385$$

Turbine section efficiency (wet basis) = 85.37%

(e) Calculation of Expansion Line and Steam Conditions Leaving No. 5 Heater Extraction Stage Point (See Fig. 9.12)

(1) Known

Pressure = 300.2 psia [see para. 9.4.7.1.1(d)]

w_1 = 9,320,903 lbm/hr [see para. 9.4.7.1.1(b)]

h_1 = 1,171.7 Btu/lbm [see para. 9.4.7.1.1(d)]

M_1 = 0.0385 [see para. 9.4.7.1.1(d)]

w_{ext5} = 521,919 lbm/hr [see para. 9.4.2.2(b)]

h_{ext5} = 1,182.5 Btu/lbm [see para. 9.4.2.2(b)] (assume zero heat loss in extraction piping)

(2) Calculations

w_2 = Flow following heater No. 5 extraction

$= w_1 - w_{ext5}$ (mass balance)

$= 9{,}320{,}903 - 521{,}919$

$= 8{,}798{,}984$ lbm/hr

$w_1 \times h_1 = (w_2 \times h_2) + (w_{ext5} \times h_{ext5})$ (heat balance)

Copyright ASME International
Provided by IHS under license with ASME
No reproduction or networking permitted without license from IHS
Not for Resale

$$h_2 = \frac{(9{,}320{,}903 \times 1{,}171.7) - (521{,}919 \times 1{,}182.5)}{8{,}798{,}984}$$
$$= 1{,}171.1 \text{ Btu/lbm}$$

This value gives extraction point leaving moisture $M_2 = 0.0393$ at 300.2 psia and 1,171.1 Btu/lbm from steam tables.

(f) Calculation of Expansion Line Conditions From No. 5 Extraction Stage Leaving Conditions to High Pressure Blading Exhaust Conditions

	Steam Path Points	
	No. 5 Heater	HP Blading Exhaust
Pressure, psia	300.2	175.1
Enthalpy, Btu/lbm	1,171.1 (h_i)	h_1
Entropy, Btu/lbm°R	1.47422	...
Moisture	0.0393	...

Turbine section efficiency – dry basis = 87.05%

h_s = 1,128.0 Btu/lbm at 175.1 psia and s
= 1.47422 Btu/lbm°R from steam tables

$$0.8705 = \frac{1{,}171.1 - h_1}{1{,}171.1 - 1{,}128.0}$$

$$h_1 = 1{,}133.6 \text{ Btu/lbm (dry basis)}$$

This value gives high pressure turbine blading exhaust moisture $M_1 = 0.0738$ at 175.1 psia and 1,133.6 Btu/lbm from steam tables.

$$\text{Turbine section average moisture} = \frac{M_2 + M_1}{2}$$
$$= \frac{0.0393 + 0.0738}{2}$$
$$= 0.0566$$

where M_2 = No. 5 heater stage leaving moisture

Correction factor to turbine section efficiency for average moisture

$$= 1.00 - 0.0566$$
$$= 0.9434$$

Corrected turbine section efficiency (wet basis)

$$= 87.05 \times 0.9434$$
$$= 82.12\%$$

First iteration to recalculate high pressure turbine blading exhaust enthalpy, using corrected turbine section efficiency (wet basis)

$$0.8212 = \frac{1{,}171.1 - h_1}{1{,}171.1 - 1{,}128.0}$$

$$h_1 = 1{,}135.7 \text{ Btu/lbm}$$

This value gives high pressure turbine blading exhaust point moisture $M_1 = 0.0713$ at 175.1 psia and 1,135.7 Btu/lbm from steam tables.

Second iteration using $M_1 = 0.0713$ to calculate turbine section average moisture correction, resulted in

$$h_1 = 1{,}135.67 \text{ Btu/lbm}$$
$$M_1 = 0.07130$$

Turbine section efficiency (wet basis) = 82.24%

(g) Calculate the high pressure turbine blading exhaust enthalpy from mass and heat balance and compare to the enthalpy calculated from the turbine expansion line on an extraction stage-by-stage basis.

(1) Known

w_2 = 7,970,107 lbm/hr [see para. 9.4.3(a)]
h_2 = 1,139.4 Btu/lbm [see para. 9.4.3(b)]
w_{ext4} = 787,415 lbm/hr (see para. 9.4.2.3)
h_{ext4} = 1,097.8 Btu/lbm (see para. 9.4.2.3)
w_{hplo1} = 19,766 lbm/hr (see para. 9.4.5)
h_{hplo1} = 1,139.4 Btu/lbm (see para. 9.4.5)
w_{hplo2} = 19,862 lbm/hr (see para. 9.4.5)
h_{hplo2} = 1,139.4 Btu/lbm (see para. 9.4.5)
w_{lplo1} = 917 lbm/hr (see para. 9.4.5)
h_{lplo1} = 1,139.4 Btu/lbm (see para. 9.4.5)
w_{lplo2} = 917 lbm/hr (see para. 9.4.5)
h_{lplo2} = 1,139.4 Btu/lbm (see para. 9.4.5)

(2) Calculations

$$w_{hpexh} = w_2 + w_{ext4} + w_{hplo1} + w_{hplo2} + w_{lplo1} + w_{lplo2} \quad \text{(mass balance)}$$
$$= 7{,}970{,}107 + 787{,}415 + 19{,}766 + 19{,}862 + 917 + 917$$
$$= 8{,}798{,}984 \text{ lbm/hr}$$

Copyright ASME International
Provided by IHS under license with ASME
No reproduction or networking permitted without license from IHS
Not for Resale

$$w_{hpexh} \times h_{hpexh} = (w_2 \times h_2) + (w_{ext4} \times h_{ext4}) + (w_{hplo1} \times h_{hplo1}) + (w_{hplo2} \times h_{hplo2}) + (w_{lplo1} \times h_{lplo1}) + (w_{lplo2} \times h_{lplo2})$$

(heat balance)

$$h_{hpexh} = \frac{(7{,}970{,}107 \times 1{,}139.4) + (787{,}415 \times 1{,}097.8) + (19{,}766 \times 1{,}139.4) + (19{,}862 \times 1{,}139.4) \pm (917 \times 1{,}139.4) + (917 \times 1{,}139.4)}{8{,}798{,}984}$$

$$= 1{,}135.68 \text{ Btu/lbm}$$

This high pressure turbine blading exhaust enthalpy (1,135.68 Btu/lbm), calculated from the mass and heat balance, agrees within 0.05 Btu/lbm with the high pressure turbine blading exhaust enthalpy (1,135.67 Btu/lbm), calculated from the high pressure turbine expansion-line on an extraction stage-by-stage method. Therefore, the expansion-line calculation is correct. If the expansion-line calculation had not given the same high pressure turbine blading exhaust enthalpy within 0.05 Btu/lbm, a new turbine section efficiency on a dry basis would have been assumed and the test high pressure turbine expansion-line calculation repeated from the beginning of para. 9.4.7.1 until agreement resulted.

9.4.7.2 Test Low Pressure Turbine Expansion. The test low pressure turbine expansion is calculated based on reheat bowl steam conditions and a reasonable assumed dry basis turbine efficiency throughout the low pressure turbine expansion. The same dry basis efficiency must be used for both the test cycle and specified cycle calculations. The test cycle calculations determine the moisture removal effectiveness for each extraction point in the wet region. The test cycle moisture removal effectiveness, expressed as percent moisture removed at the extraction point, is used as a basic index of test turbine performance in the specified cycle low pressure turbine expansion line calculation.

9.4.7.2.1 Low Pressure Turbine Expansion Initial Conditions

	Low Pressure Turbine	
	Inlet	Bowl
Pressure, psia	166.4	163.1 (166.4 x 0.98) Used 2% pressure drop through intercept valves
Enthalpy, Btu/lbm	1,278.0	1,278.0
Entropy, Btu/lbm°R	1.65294	1.65507

GENERAL NOTE: Assumption: Low pressure turbine efficiency – dry basis = 90.32%. This assumption is checked in para. 9.4.7.2.1(j).

(a) Calculation of Expansion Line Condition From Inlet to No. 3 Heater Extraction Stage Entering Conditions

	Steam Path Points	
	LP Bowl	No. 3 Heater
Pressure, psia	163.1	61.03
Enthalpy, Btu/lbm	1,278.0 (h_i)	h_1
Entropy, Btu/lbm°R	1.65507	...
Moisture	0.0	...

Turbine section efficiency – dry basis = 90.32%

$$\text{Efficiency} = \frac{h_i - h_1}{h_i - h_s}$$

h_s = 1,187.4 Btu/lbm at 61.03 psia and s
= 1.65507 Btu/lbm°R from the steam tables

$$0.9032 = \frac{1{,}278.0 - h_1}{1{,}278.0 - 1{,}187.4}$$

$$h_1 = 1{,}196.2 \text{ Btu/lbm}$$

This value puts extraction point in the superheated region at 61.03 psia and 1,196.2 Btu/lbm from the steam tables.

(b) Calculation of Expansion Line and Steam Conditions Leaving No. 3 Heater Extraction Stage Point (See Fig. 9.13)

(1) Known

Pressure = 61.03 psia

w_1 = Reheater flow to low pressure turbine
= 7,448,869 lbm/hr [see para. 9.4.3(b)]

h_1 = 1,196.2 Btu/lbm [see para. 9.4.7.2.1(a)]

$w_{ext3} = w_3 + w_{fpt}$
= 541,835 + 125,354
= 667,189 lbm/hr (see para. 9.4.2.1.4)

h_{ext3} = 1,197.8 Btu/lbm

Copyright ASME International
Provided by IHS under license with ASME
No reproduction or networking permitted without license from IHS
Not for Resale

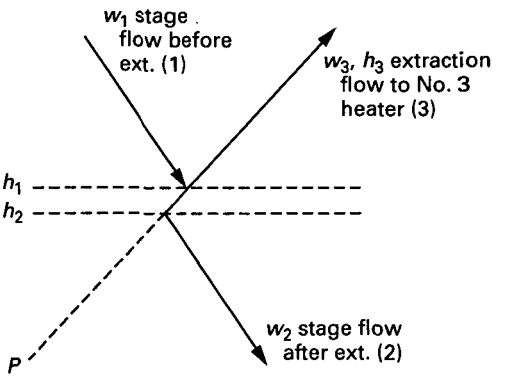

FIG. 9.13 EXPANSION LINE AND STEAM CONDITIONS LEAVING NO. 3 HEATER EXTRACTION STAGE POINT

(2) Calculations

w_2 = Flow following heater No. 3 extraction
= $w_1 - w_{ext3}$ (mass balance)
= 7,448,869 − 667,189
= 6,781,680 lbm/hr

$w_1 \times h_1 = (w_2 \times h_2) + (w_{ext3} \times h_{ext3})$ (heat balance)

$$h_2 = \frac{(7{,}448{,}869 \times 1{,}196.2) - (667{,}189 \times 1{,}197.8)}{6{,}781{,}680}$$

= 1,196.0 Btu/lbm

(c) Calculation of Steam Conditions Where Expansion Line Crosses Saturation Line. Assume 43.52 psia is at the crossing point, which gives h_s = 1,168.7 Btu/lbm at 43.52 psia and s = 1.66612 Btu/lbm°R from the steam tables.

$$\text{Efficiency} = \frac{h_i - h_o}{h_i - h_s}$$

$$0.9032 = \frac{1{,}196.0 - h_o}{1{,}196.0 - 1{,}168.7}$$

$$h_o = 1{,}171.4 \text{ Btu/lbm}$$

This point in the steam tables agrees with the assumed pressure of 43.52 psia. If agreement had not been reached, a new pressure would have been assumed with successive iterations.

(d) Calculation of Expansion Line Condition From Saturation Line to No. 2 Extraction Stage Entering Conditions

	Steam Path Points	
	Saturation Line	No. 2 Heater
Pressure, psia	43.52	17.56
Enthalpy, Btu/lbm	1,171.4 (h_i)	h_1
Entropy, Btu/lbm°R	1.66973	...
Moisture	0	...

Turbine section efficiency − dry basis
= 90.32% (see opening section of para. 9.4.7.2.1)

$$\text{Efficiency} = \frac{h_i - h_1}{h_i - h_s}$$

h_s = 1,104.3 Btu/lbm at 17.56 psia and s
= 1.66973 Btu/lbm°F from the steam tables

$$0.9032 = \frac{1{,}171.4 - h_1}{1{,}171.4 - 1{,}104.3}$$

$$h_1 = 1{,}110.8 \text{ Btu/lbm (dry basis)}$$

This value gives extraction point entering moisture M_1 = 0.0446 at 17.56 psia and 1,110.8 Btu/lbm from steam tables.

$$\text{Turbine section average moisture} = \frac{(M_0 + M_1)}{2}$$

$$= (0 + 0.0446)/2$$

$$= 0.0223$$

where M_0 = moisture at saturation line

Copyright ASME International
Provided by IHS under license with ASME
No reproduction or networking permitted without license from IHS
Not for Resale

Correction factor to turbine section efficiency for average moisture

$$= 1.00 - 0.0223$$

$$= 0.9777$$

Corrected turbine section efficiency (wet basis)

$$= 90.32 \times 0.9777$$

$$= 88.31\%$$

First iteration to recalculate extraction point entering enthalpy, using corrected turbine section efficiency (wet basis)

$$0.8831 = \frac{1{,}171.4 - h_1}{1{,}171.4 - 1{,}104.3}$$

$$h_1 = 1{,}112.1 \text{ Btu/lbm}$$

This value gives extraction point entering moisture $M_1 = 0.0433$ at 17.56 psia and 1,112.1 Btu/lbm from steam tables.

Second iteration using $M_1 = 0.0433$ to calculate turbine section average moisture correction, resulted in

$$h_1 = 1{,}112.1 \text{ Btu/lbm}$$

$$M_1 = 0.0433$$

Turbine section efficiency (wet basis) = 88.37%

(e) Calculation of Expansion Line and Steam Conditions Leaving No. 2 Heater Extraction Stage Point (See Fig. 9.14)

(1) Known

Pressure = 17.56 psia
w_1 = 6,781,680 lbm/hr [see para. 9.4.7.2.1(b)]
h_1 = 1,112.1 Btu/lbm [see para. 9.4.7.2.1(d)]
M_1 = 0.0433 [see para. 9.4.7.2.1(d)]
w_{ext2} = 487,047 lbm/hr (see para. 9.4.2.5)
h_{ext2} = 1,066.5 Btu/lbm (see para. 9.4.2.5) (assume zero heat loss in extraction piping)

(2) Calculations

w_2 = Flow following heater No. 2 extraction
$= w_1 - w_{ext2}$ (mass balance)
$= 6{,}781{,}680 - 487{,}047$
$= 6{,}294{,}633$ lbm/hr

$w_1 \times h_1 = (w_2 \times h_2) + (w_{ext2} \times h_{ext2})$ (heat balance)

$$h_2 = \frac{(6{,}781{,}680 \times 1{,}112.1) - (487{,}047 \times 1{,}066.5)}{6{,}294{,}633}$$

$= 1{,}115.6$ Btu/lbm

This value gives extraction point leaving moisture, $M_2 = 0.0396$ at 17.56 psia and 1,115.6 Btu/lbm from steam tables.

(f) Calculation of Moisture Removal Effectiveness. E is the proportion of "extra" or "free water" removed into the extraction line above the amount that normally would be in the extraction steam with moisture level M_1 as shown in Fig. 9.14.

$$E_2 = \frac{(M_1 - M_2)}{M_1} \times 100$$

where

M_1 = extraction point entering moisture
M_2 = extraction point leaving moisture

This relationship for E is a close approximation for the theoretically correct relationship and is suitable for this calculation. (Some cases may require carrying E to three decimal places.)

$$E_2 = \frac{(0.0433 - 0.0396)}{0.0433} \times 100 = 8.55\%$$

(g) Calculation of Expansion Line Conditions From No. 2 Heater Extraction Stage Leaving Conditions to No. 1 Heater Extraction Stage Entering Conditions

	Steam Path Points	
	No. 2 Heater Stage	No. 1 Heater Stage
Pressure, psia	17.56	3.54
Enthalpy, Btu/lbm	1,115.6 (h_i)	h_1
Entropy, Btu/lbm°R	1.68638	...
Moisture	0.0396	...

Turbine section efficiency – dry basis = 90.32%

$$\text{Efficiency} = \frac{h_i - h_1}{h_i - h_s}$$

Copyright ASME International
Provided by IHS under license with ASME
No reproduction or networking permitted without license from IHS
Not for Resale

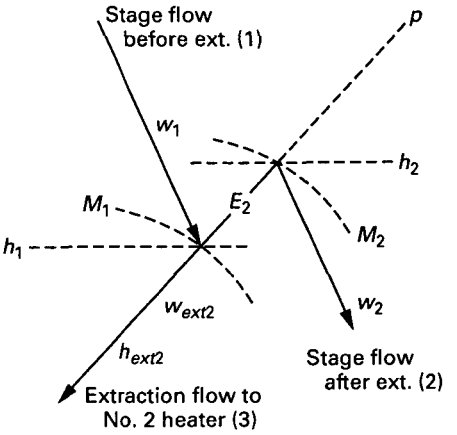

FIG. 9.14 EXPANSION LINE AND STEAM CONDITIONS LEAVING NO. 2 HEATER EXTRACTION STAGE POINT

h_s = 1,012.1 Btu/lbm at 3.54 psia and s = 1.68638 Btu/lbm°R from steam tables

$$0.9032 = \frac{1{,}115.6 - h_1}{1{,}115.6 - 1{,}012.1}$$

h_1 = 1,022.1 Btu/lbm (dry basis)

This value gives extraction point entering moisture M_1 = 0.1022 at 3.54 psia and 1,022.1 Btu/lbm from steam tables.

$$\text{Turbine section average moisture} = \frac{(M_2 + M_1)}{2}$$

where

M_2 = No. 2 heater stage leaving moisture [para. 9.4.7.2.1(e)]

Turbine section average moisture = (0.0396 + 0.1022)/2 = 0.0709

Correction factor to turbine section efficiency for average moisture = 1.00 − 0.0709 = 0.9291

Corrected turbine section efficiency (wet basis) = 90.32 × 0.9291 = 83.92%

First iteration to recalculate extraction point entering enthalpy, using corrected turbine section efficiency (wet basis)

$$0.8392 = \frac{1{,}115.6 - h_1}{1{,}115.6 - 1{,}012.1}$$

h_1 = 1,028.7 Btu/lbm

This value gives extraction point entering moisture M_1 = 0.0957 at 3.54 psia and 1,028.7 Btu/lbm from steam tables.

Successive iterations using M_1 were made until resulting moisture differences were 0.0001, which resulted in

h_1 = 1,028.4 Btu/lbm

M_1 = 0.0960

Turbine section efficiency (wet basis) = 84.20%

(h) Calculation of Expansion Line and Steam Conditions Leaving No. 1 Heater Extraction Stage Point (See Fig. 9.15)

(1) Known

Pressure = 3.54 psia
w_1 = 6,294,633 lbm/hr [see para. 9.4.7.2.1(e)]
h_1 = 1,028.4 Btu/lbm [see para. 9.4.7.2.1(g)]
M_1 = 0.0960 [see para. 9.4.7.2.1(g)]
w_{ext1} = 529,710 lbm/hr [see para. 9.4.2.6(b)]

Copyright ASME International
Provided by IHS under license with ASME
No reproduction or networking permitted without license from IHS
Not for Resale

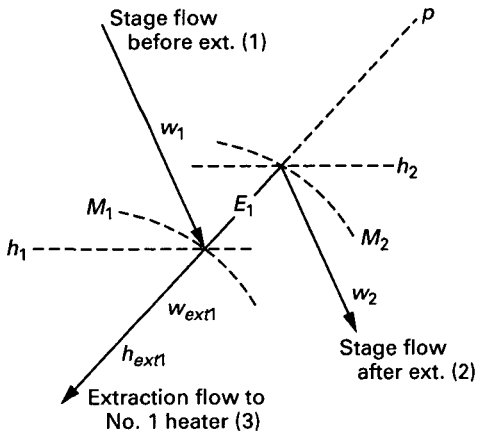

FIG. 9.15 EXPANSION LINE AND STEAM CONDITIONS LEAVING NO. 1 HEATER EXTRACTION STAGE POINT

h_{ext1} = 748.2 Btu/lbm [see para. 9.4.2.6(b)] (assume zero heat loss in extraction piping)

(2) Calculations

w_2 = Flow following heater No. 1 extraction

$= w_1 - w_{ext1}$ (mass balance)

$= 6{,}294{,}633 - 529{,}710$

$= 5{,}764{,}923$ lbm/hr

$w_1 \times h_1 = (w_2 \times h_2) + (w_{ext1} \times h_{ext1})$ (heat balance)

$$h_2 = \frac{(6{,}294{,}633 \times 1{,}028.4) - (529{,}710 \times 748.2)}{5{,}764{,}923}$$

$= 1{,}054.2$ Btu/lbm

This value gives extraction point leaving moisture, $M_2 = 0.0704$ at 3.54 psia and 1,054.2 Btu/lbm from steam tables.

(i) Calculation of Moisture Removal Effectiveness, E_1

$$E_1 = \frac{(M_1 - M_2) \times 100}{M_1}$$

where

M_1 = extraction point entering moisture
M_2 = extraction point leaving moisture

$$E_1 = \frac{(0.0960 - 0.0704)}{0.0960} \times 100$$

$= 26.67\%$

(j) Calculate the low pressure turbine exhaust expansion line end point enthalpy by the same method used for previous turbine sections and compare to ELEP from overall turbine energy balance in para. 9.4.6.

	Steam Path Points	
	No. 1 Heater Stage	LP Turbine Exhaust
Pressure, psia	3.54	0.575 (1.17 in. Hga)
Enthalpy, Btu/lbm	1,054.2 (h_i)	h_o
Entropy, Btu/lbm°R	1.75568	...
Moisture	0.0704	...

Turbine section efficiency – dry basis = 90.32%

$$\text{Efficiency} = \frac{h_i - h_o}{h_i - h_s}$$

h_s = 951.68 Btu/lbm at 0.575 psia
s = 1.75568 Btu/lbm°R from steam tables

Copyright ASME International
Provided by IHS under license with ASME
No reproduction or networking permitted without license from IHS
Not for Resale

$$0.9032 = \frac{1{,}054.2 - h_o}{1{,}054.2 - 951.68}$$

$$h_o = 961.6 \text{ Btu/lbm (dry basis)}$$

This value gives extraction point entering moisture $M_0 = 0.1305$ at 1.17 in. Hga and 961.6 Btu/lbm from steam tables.

$$\text{Turbine section average moisture} = \frac{(M_1 + M_0)}{2}$$

where

M_1 = No. 1 heater stage leaving moisture [see para. 9.4.7.2.1(h)]

Turbine section average moisture = (0.0704 + 0.1305)/2
= 0.1005

Correction factor to turbine section efficiency for average moisture

= 1.00 − 0.1005
= 0.8995

Corrected turbine section efficiency (wet basis)

= 90.32 × 0.8995
= 81.24%

First iteration to recalculate ELEP enthalpy using corrected turbine section efficiency (wet basis).

$$0.8124 = \frac{1{,}054.2 - h_o}{1{,}054.2 - 951.68}$$

$$h_o = 970.9 \text{ Btu/lbm}$$

This value gives low pressure turbine exhaust moisture of $M_1 = 0.1216$ at 1.17 in. Hga and 970.9 Btu/ lbm from steam tables.

Successive iterations using M_0 were made until resulting moisture differences were less than 0.0001, which resulted in

$$h_o = 970.51 \text{ Btu/lbm}$$

$$M_0 = 0.1220$$

Turbine section efficiency (wet basis) = 81.63%

This ELEP enthalpy (h_o = 970.51 Btu/lbm), calculated from the low pressure turbine expansion line on an extraction stage-by-stage basis, agrees within 0.05 Btu/lbm with the overall low pressure turbine energy balance ELEP at 970.53 Btu/lbm (see para. 9.4.6). Therefore, the expansion-line calculation is correct. If the expansion-line calculation had not given the same ELEP enthalpy within 0.05 Btu/lbm, a new turbine section efficiency on a dry basis would have been assumed and the test low pressure turbine expansion-line calculation repeated from the beginning of para. 9.4.7.2.1 until agreement resulted.

9.4.7.3 The test steam path pressure/flow relationships were calculated as shown in Table 9.2.

9.4.8 Calculation of Overall Turbine Section Efficiencies and Effectiveness. Initial, final, and expansion-line steam conditions for the calculation of the overall turbine section efficiencies and effectiveness are now known. The calculated test efficiencies and effectiveness can then be compared to the values derived from the design heat balances and can be used to determine where the gains or deficiencies are.

High pressure turbine efficiency:

$$\text{Efficiency } (hp) = \frac{h_i - h_o}{h_i - h_s}$$

$$= \frac{1{,}255.1 - 1{,}135.7}{1{,}255.1 - 1{,}116.2} \times 100$$

$$= 86.0\%$$

(a) High Pressure Turbine Effectiveness. For turbines with moisture removal stages, section efficiency is not an appropriate performance indicator as discussed in para. 5.10.2 of the Code. With the internal efficiency definition, more effective water removal reduces calculated efficiency, which is contradictory. Performance of such turbine section is therefore better measured in terms of effectiveness, where

$$\text{Effectiveness} = \frac{Dh}{Dh + To\ Ds}$$

where

Dh = sum of the actual work (in Btu/lbm or kJ/kg) of the individual expansions in the turbine steam path

Copyright ASME International
Provided by IHS under license with ASME
No reproduction or networking permitted without license from IHS
Not for Resale

TABLE 9.2
TEST STEAM PATH PRESSURE/FLOW RELATIONSHIPS

Stage	Steam Path Flows, *w*-lbm/hr	Stage Pressures, *p*-psia	Pressure/Flow Relationships, $\frac{w\sqrt{p/v}}{\sqrt{1-M}}$
Steam flow supplied to the turbine cycle	10,779,670	...	...
Heating steam flow to second stage reheaters	−387,790	...	...
Throttle flow	10,391,880	...	...
Control valve leakoff (low pressure)	−480	...	...
Control valve leakoff (high pressure)	−1,580	...	...
First stage flow	10,389,820	...	...
Heating steam flow to first stage reheaters	−638,574	...	...
Extraction to first stage	−430,343	...	...
Flow following extraction	9,320,903	507.4 [see para. 9.4.3(d)]	398,087.4
Extraction to No. 5 heater	−521,919	...	...
Flow following extraction	8,798,984	300.2 [see para. 9.4.7.1.1(d)]	630,725.5
No. 1 packing leakoff	−19,766	...	...
No. 2 packing leakoff	−19,862	...	...
No. 1 gland seal leakoff	−917	...	...
No. 2 gland seal leakoff	−917	...	...
Extraction to No. 4 heater	−787,415	...	...
Flow leaving high pressure turbine	7,970,107	175.1	[see para. 9.4.7.1.1(f)]
Moisture removed by moisture separator	−521,238	...	...
Flow to low pressure turbine	7,448,869	166.4 [see para. 9.4.3(b)]	1,055,948.0
Extraction to No. 3 heater	−541,835	...	...
Extraction to feedwater pump turbine	−125,354	...	...
Flow following extraction	6,781,680	61.03 [see para. 9.4.7.2.1(a)]	2,367,142.4
Extraction to No. 2 heater	−487,047	...	...
Flow following extraction	6,294,633	17.56 [see para. 9.4.7.2.1(d)]	7,154,879.5
Extraction to No. 3 heater	−529,710	...	...
Flow following extraction	5,764,923	3.54 [see para. 9.4.7.2.1(g)]	30,884,393.6
Flow to condenser	5,764,923	...	...

Ds = sum of the entropy changes (in Btu/lbm°R or kJ/kgK) corresponding to the *Dh* expansions used above

To = absolute temperature (in °R or K) corresponding to the turbine exhaust pressure

High pressure turbine section, in this example, has inlet steam conditions, which contain some superheat. Therefore, it is only partially operating in the moisture region without provisions for the moisture removal stages. In this case, the effectiveness is calculated for demonstrative purposes only. A substantial number of high pressure turbines have inlet steam conditions that contain moisture and are provided with moisture removal stages. In those cases it will be necessary to calculate effectiveness.

(1) Calculations

Dh = (1,255.1 − 1,210.6) + (1,209.5 − 1,171.7) + (1,171.1 − 1,135.7) (from expansion line, see Fig. 9.16)
= 117.7 Btu/lbm

Ds = (1.46892 − 1.46183) + (1.47495 − 1.46773) + (1.48343 − 1.47422) (from expansion line, see Fig. 9.16)
= 0.02537 Btu/lbm°R

To = (370.8 + 459.67)
= 830.47 °R (saturated temperature 175.1 psia)

Copyright ASME International
Provided by IHS under license with ASME
No reproduction or networking permitted without license from IHS
Not for Resale

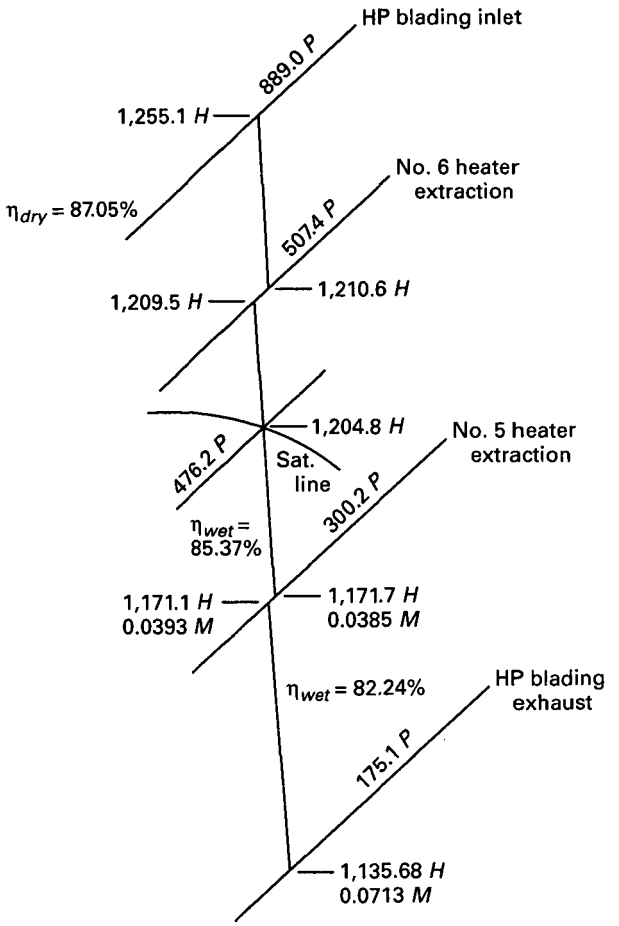

FIG. 9.16 H-S DIAGRAM OF TEST CYCLE HIGH PRESSURE TURBINE

$$\text{Effectiveness} = \frac{117.7}{117.7 + (830.47 \times 0.02537)} \times 100$$

$$= 84.8\%$$

(b) Low Pressure Turbine Effectiveness

$$\text{Effectiveness} = \frac{Dh}{Dh + To\ Ds}$$

where

Dh = sum of the actual work (in Btu/lbm or kJ/kg) of the individual expansions in the turbine steam path

Ds = sum of the entropy changes (in Btu/lbm°R or kJ/kgK) corresponding to the Dh expansions used above

To = absolute temperature (in °R or K) corresponding to the turbine exhaust pressure

(c) Effectiveness to TEP Calculations

Dh = (1,278.0 − 1,196.2) + (1,196.0 − 1,171.4) + (1,171.4 − 1,112.1) + (1,115.6 − 1,028.4) + (1,054.2 − 998.93) (from expansion line, see Fig. 9.17)
= 308.17 Btu/lbm

Ds = (1.66632 − 1.65294) + (1.66973 − 1.66612) + (1.68119 − 1.66973) + (1.71331 − 1.68638) + (1.84262 − 1.75568) (from expansion line)
= 0.14232 Btu/lbm°R

To = 83.9 + 459.67
= 543.57°R (saturated temperature 1.17 in. Hg)

Copyright ASME International
Provided by IHS under license with ASME
No reproduction or networking permitted without license from IHS
Not for Resale

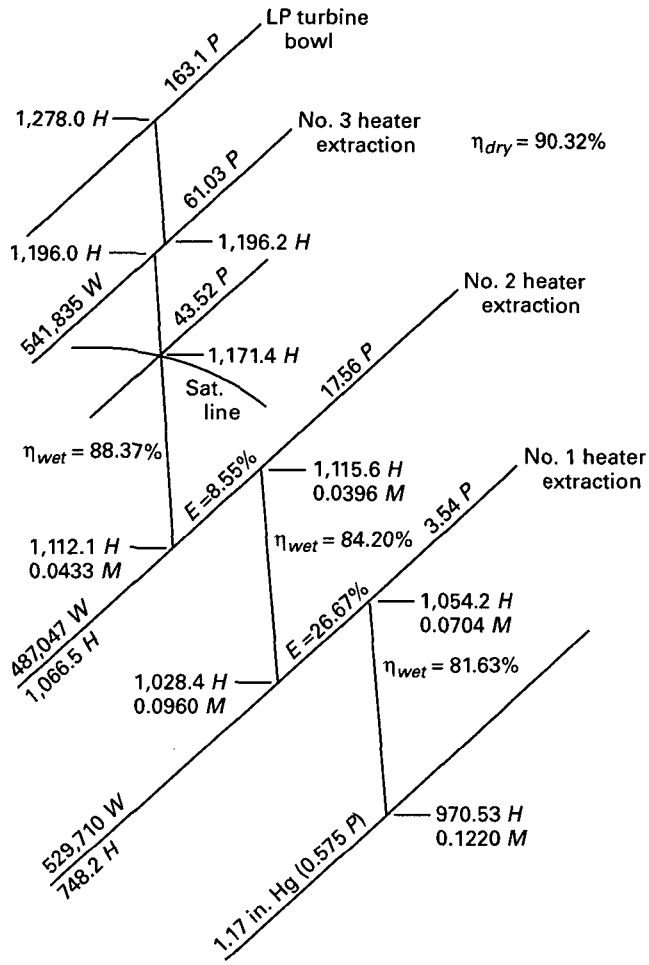

FIG. 9.17 H-S DIAGRAM OF TEST CYCLE LOW PRESSURE TURBINE

$$\text{Effectiveness to TEP} = \frac{308.17}{308.17 + (543.57 \times 0.14232)} \times 100$$

$$= 79.9\%$$

(d) Effectiveness to ELEP Calculations

Dh = (1,278.0 − 1,196.2) + (1,196.0 − 1,171.4) + (1,171.4 − 1,112.1) + (1,115.6 − 1,028.4) + (1,054.2 − 970.53) (from expansion line, see Fig. 9.17)

= 336.57 Btu/lbm

Ds = (1.66632 − 1.65294) + (1.66973 − 1.66612) + (1.68119 − 1.66973) + (1.71331 − 1.68638) + (1.79037 − 1.75568) (from expansion line)

= 0.09007 Btu/lbm°R

To = 83.9 + 459.67 = 543.57 °R (saturated temperature 1.17 in. Hg)

$$\text{Effectiveness to ELEP} = \frac{336.57}{336.57 + (543.57 \times 0.09007)} \times 100$$

Effectiveness to ELEP = 87.3%

9.4.9 Keys to Figs. 9.2 and 9.18

W = flow, lbm/hr
P = pressure, psia
h = enthalpy, Btu/lbm
1 = valve stem leakoff to heater 4
2 = valve stem leakoff to SSR
3 = first stage reheater drains to heater 6
4 = second stage reheater drains to heater 6

Copyright ASME International
Provided by IHS under license with ASME
No reproduction or networking permitted without license from IHS
Not for Resale

5 = low pressure turbine extraction steam to FWP turbine throttle
6 = high pressure steam to air ejector
7 = SSR steam to steam packing exhauster
8 = FWP turbine seal steam leakoff to SSR
9 = HP turbine shaft packing leakage to SSR
10 = HP turbine shaft packing leakage to SSR
11 = HP turbine shaft packing leakage to SSR

9.5 CORRECTION OF TEST PERFORMANCE TO SPECIFIED OPERATING CONDITIONS

The following method presents one way of analyzing steam turbine performance in a nuclear cycle.

9.5.1 Group 1 Corrections. Performance is corrected for the effect of the Group 1 variables as described in para. 5.8.2 of the Code and outlined in para. 5.11 of the Code. The Group 1 variables primarily include the effect of the feedwater/condensate system and all auxiliary equipment external to the turbine generator. Corrections for generator operating conditions, which are conveniently made at this time, are also included.

The test data that reflects the characteristics of the turbine, such as turbine efficiencies, packing and leakoff flows, and stage flow functions, are maintained.

(a) For this example, these turbine characteristic conditions, taken from the test data, are as follows:

(1) Test throttle flow to the turbine.

(2) Test main steam pressure and temperature.

(3) Test low pressure turbine exhaust pressure.

(4) Test percent pressure drop from high pressure turbine exhaust to intercept valve inlet.

(5) Test high pressure and low pressure turbine section efficiencies on a dry basis.

(6) Test terminal temperature differences for the first and second stage reheaters (these components are supplied by the turbine generator manufacturer).

(7) Test moisture separator performance (these components are supplied by the turbine generator manufacturer).

(8) Test turbine steam seal leakoffs and steam seal system flows.

(9) Feedwater flow leaving the highest pressure feedwater heater is equal to the test turbine flow plus the specified air ejector steam flow (1,000 lbm/hr).

(10) No change in water storage at any point in the cycle.

(b) The cycle conditions external to the equipment supplied by the turbine generator manufacturer are calculated on the same performance basis as for the specified cycle. These include feedwater heaters, pumps and pump drives (including steam driven auxiliary turbines not supplied as part of the turbine generator package), extraction line pressure drops, and heat losses.

(c) In calculating the test turbine in the specified cycle heat balance diagram, Fig. 9.18, extraction and steam path flow conditions will change due to the different cycle equipment performance characteristics (specified conditions rather than test). It must be recognized that certain performance criteria within the turbine must be maintained on the same basis as the test to reflect the measured turbine characteristic conditions. Therefore, adjustments to the test turbine conditions are necessary due to new steam flow values and include the following:

(1) The main steam flow for the test turbine in specified cycle may be different from test due to the change in the second stage reheater flow.

(2) The reheat turbine inlet pressure (intercept valve inlet) must have the same flow versus pressure relationship as test. Adjustments in the reheat turbine inlet pressure may be required to maintain the test relationship within 1%. Other pressure versus flow relationships should agree with the test within the same 1% limit or 1 psi, whichever is smaller.

(3) If the reheat turbine inlet pressure changes, the high pressure turbine exhaust pressure should be determined from the new reheat turbine inlet pressure and the test pressure drop through the moisture separator reheater system (heated steam side).

(4) The test turbine section efficiencies may require adjustments as a function of a change in the average moisture, using the relationship 1% efficiency change for each 1% change in average moisture. Average moisture is defined as the arithmetic average of the moisture at the inlet and at the exit of the turbine section under consideration.

9.5.1.1 Calculation of Test Turbine in Specified Cycle. The cycle correction for the effect of variables that primarily affect the feedwater/condensate heater system is determined by calculating a new heat balance, which uses the test turbine expansion line, test packing leakages, test moisture removal effectiveness, test throttle flow, and specified cycle conditions in accordance with para. 5.11 of the Code. This heat balance uses an iterative calculation procedure in which the specified extraction line pressure drop, specified heater terminal temperature and drain

Copyright ASME International
Provided by IHS under license with ASME
No reproduction or networking permitted without license from IHS
Not for Resale

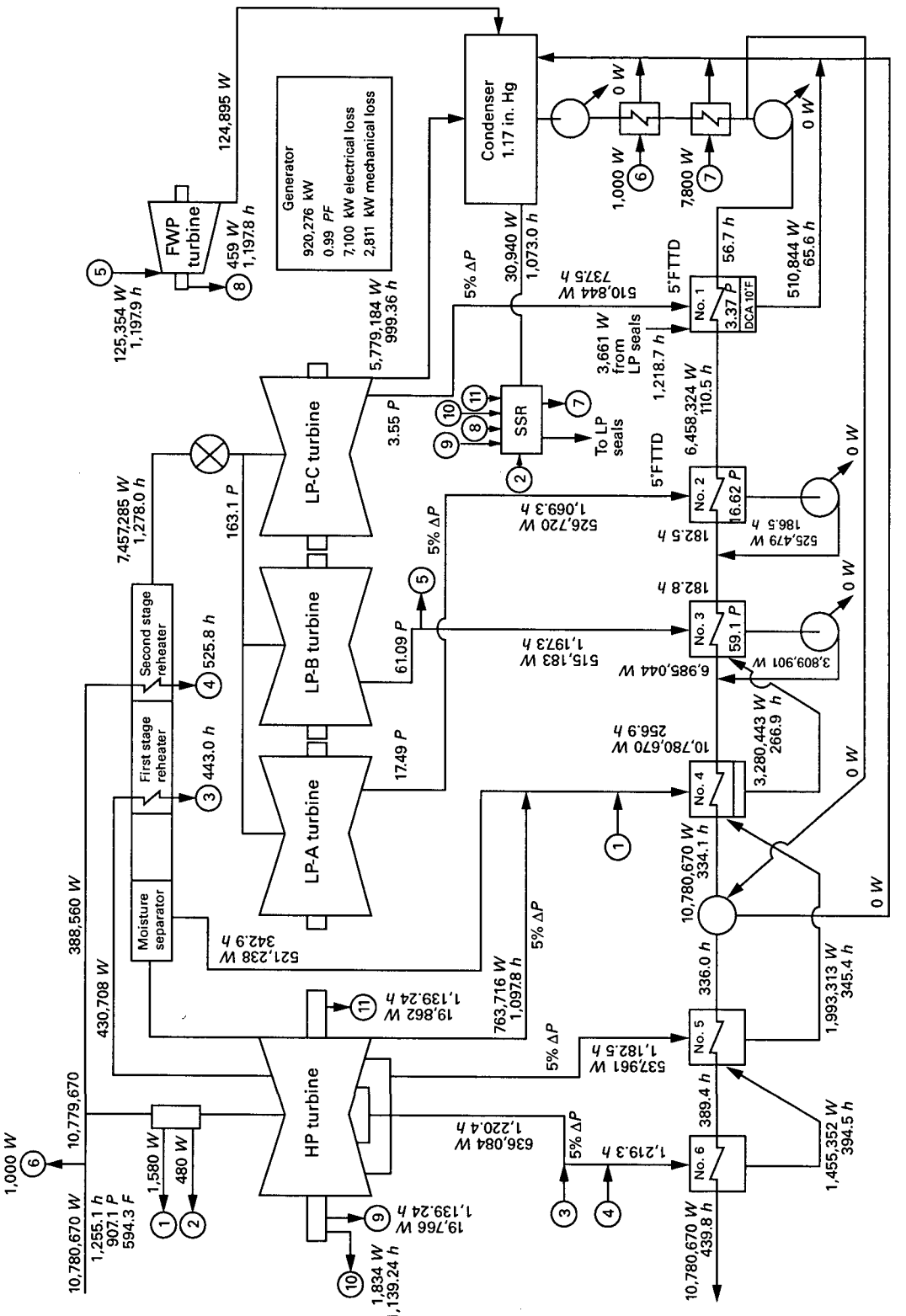

FIG. 9.18 TEST TURBINE IN SPECIFIED CYCLE

GENERAL NOTE: Refer to para. 9.4.9.

Copyright ASME International
Provided by IHS under license with ASME
No reproduction or networking permitted without license from IHS
Not for Resale

cooler approach differences, test extraction stage coefficients, and moisture removal effectiveness are used to determine new extraction flows for all heaters and moisture separator reheater. This in turn allows the calculation of a new low pressure turbine exhaust flow and enthalpy of the steam flowing to the condenser. The corresponding generator output is then calculated by means of an energy balance around the overall turbine, and this is used with the corresponding turbine heat input to calculate a corrected turbine heat rate for comparison to the specified performance.

In this example, the high pressure turbine expansion line lies partially in the superheated steam region. Therefore, the amount of moisture present at extraction stages to Nos. 6 and 5 heaters is relatively small. No. 4 heater extraction contains a significant percentage of moisture, and No. 3 heater receives superheated steam. The technically correct procedure to be followed is given above and requires revised calculations for all feedwater heaters, which are shown below. For nomenclature see Fig. 9.11.

9.5.1.1.1 Calculation of High Pressure Turbine in Specified Cycle. High pressure turbine expansion initial conditions are as follows.

	High Pressure Turbine	
	Main Steam	HP Blading Inlet
Pressure, psia	907.1	889.0 (907.1 × 0.98) Used 2% pressure drop through throttle and control valves
Enthalpy, Btu/lbm	1,255.1	1,255.1
Entropy, Btu/lbm °R	. . .	1.46183

From test cycle calculations use high pressure turbine efficiency – dry basis = 87.05%.

See para. 9.4.7.1 and para. 9.4.7.1.1(g).

(a) Expansion Line Condition From HP Blading Inlet to No. 6 Heater. Extraction stage entering conditions are as follows.

	Steam Path Points	
	HP Blading Inlet	No. 6 Heater
Pressure, psia	889.0	507.4 (assumed)
Enthalpy, Btu/lbm	1,255.1 (h_i)	h_1
Entropy, Btu/lbm°R	1.46183	. . .
Moisture	0	. . .

Turbine section efficiency – dry basis = 87.05%. See paras. 9.4.7.1 and 9.4.7.1.1(g).

No. 6 heater extraction pressure must be assumed due to the change in the extraction flow while maintaining the test turbine pressure/flow relationship. This assumption will be checked in para. 9.5.1.1.1(d).

$$\text{Efficiency} = \frac{h_i - h_1}{h_i - h_s}$$

h_s = 1,204.0 Btu/lbm at 507.4 psia

s = 1.46183 Btu/lbm °R from the steam tables

$$0.8705 = \frac{1{,}255.1 - h_1}{1{,}255.1 - 1{,}204.0}$$

h_1 = 1,210.6 Btu/lbm

This value puts the extraction point in the superheated region at 507.4 psia and 1,210.6 Btu/lbm from the steam tables.

(b) Calculation of No. 6 Heater Extraction Flow

(1) Specified Conditions

Pressure drop from turbine steam path to heater shell = 5%

Heater terminal temperature difference = 5°F

Drain cooler temperature difference = 10°F

(2) Assumptions (Checked Later)

Turbine steam path pressure = 507.4 psia [assumed in para. 9.5.1.1.1(a)]

h_{ext6} = 1,220.4 Btu/lbm (same as test data)

w_{rh1} = 430,708 lbm/hr [checked in para. 9.5.1.1.1(n)]

h_{rh1} = 443.0 Btu/lbm (same as test data, see Fig. 9.16)

w_{rh2} = 388,560 lbm/hr [checked in para. 9.5.1.1.1(o)]

h_{rh2} = 525.8 Btu/lbm (same as test data, see Fig. 9.16)

$t_{fi6} = t_{fo5}$ = 407.7°F [checked in para. 9.5.1.1.1(g)]

Determine t_{fo6} = 458.2°F (and h_{fo6} = 439.8 Btu/lbm) from terminal temperature difference applied to the heater saturation temperature as a function of heater shell pressure (482.0 psia), which was calculated from turbine steam path pressure (507.4 psia) as assumed, minus the specified pressure drop to heater. Determine t_{d6} = 417.7°F (and h_{d6} = 394.5 Btu/lbm) from the specified drain cooler temperature

Copyright ASME International
Provided by IHS under license with ASME
No reproduction or networking permitted without license from IHS
Not for Resale

difference applied to the assumed No. 6 heater water inlet temperature. Determine h_{fi6} = 384.4 Btu/lbm from the assumed No. 6 water heater inlet temperature.

Feedwater flow leaving the highest pressure (No. 6) feedwater heater is equal to the test turbine flow (10,779,670 lbm/hr) plus the specified air ejector steam flow (1,000 lbm/hr).

(3) Calculate No. 6 Heater Extraction Flow

$$w_{ext6} = \frac{w_{fi6}(h_{fo6} - h_{fi6}) - w_{rh1}(h_{rh1} - h_{d6}) - w_{hr2}(h_{rh2} - h_{d6})}{h_{ext6} - h_{d6}}$$

$$= \frac{10{,}780{,}670\ (439.8 - 384.4) - 430{,}708\ (443.0 - 394.5) - 388{,}560\ (525.8 - 394.5)}{1{,}220.4 - 394.5}$$

= 636,084 lbm/hr

(c) Calculation of Steam Conditions at No. 6 Heater Extraction Stage (See Fig. 9.3)

(1) Known

Pressure = 507.4 psia [assumed in para. 9.5.1.1.1.(a)]

w_1 = steam path through flow
= test throttle flow to turbine − second stage moisture separator reheater flow − control valve leakoff (high pressure) flow − control valve leakoff (low pressure) flow
= 10,779,670 − 388,560 − 1,580 − 480
= 10,389,050 lbm/hr

h_1 = 1,210.6 Btu/lbm [see para. 9.5.1.1.1(a)]

$w_3 = w_{ext6} + w_{rh1}$ = 636,084 + 430,708 [see para. 9.5.1.1.1(b)]
= 1,066,792 lbm/hr

$h_3 = h_{ext3}$ = 1,220.4 Btu/lbm [assumed in para. 9.5.1.1.1(b)]

w_2 = Flow leaving No. 6 extraction stage
= $w_1 - w_3$ = 10,389,050 − 1,066,792 (mass balance)
= 9,322,258 lbm/hr

(2) Calculation of Enthalpy and Specific Volume Leaving No. 6 Heater Extraction Stage [Point (2)]

$w_1 \times h_1 = w_2 \times h_2 + w_3 \times h_3$ (heat balance)

$$h_2 = \frac{w_1 \times h_1 - w_3 \times h_3}{w_2}$$

$$= \frac{10{,}389{,}050 \times 1{,}210.6 - 1{,}066{,}792 \times 1{,}220.4}{9{,}322{,}258}$$

= 1,209.5 Btu/lbm

Specific volume, v = 0.9255 cu ft/lbm at 507.4 psia and 1,209.5 Btu/lbm from steam tables.

(d) Check assumed turbine steam path pressure at the No. 6 heater extraction stage [see para. 9.5.1.1.1(a)] by applying the test steam path pressure/flow relationship for No. 6 heater extraction stage to the specified cycle steam path flow leaving the No. 6 heater extraction stage calculated in para. 9.5.1.1.1(c).

$$\frac{w/\sqrt{p/v}}{\sqrt{1 - M}} = K$$

where

K = 398,087.4 (constant), see para. 9.4.7.3
$w = w_2$ = 9,322,258 lbm/hr, see para. 9.5.1.1.1(c)
v = 0.9255 cu ft/lbm, see para. 9.5.1.1.1(c)
M = moisture = 0.0 (superheated steam)
p = stage pressure, psia

$$\frac{9{,}322{,}258/\sqrt{p/0.9255}}{\sqrt{1 - 0.0}} = 398{,}087.4$$

$$p = 507.6 \text{ psia}$$

This value checks the assumed pressure. If the assumed pressure is not correct within 1% or 1.0 psi, whichever is smaller, iterations using a new assumed pressure must be made for No. 6 heater extraction stage entering conditions with subsequent repeat calculations until agreement is reached.

Because the assumed extraction pressure (same as test) needs not to be revised and the steam conditions upstream of this extraction zone are superheated, the assumed extraction enthalpy (same as test) also needs not to be revised.

(e) Steam Conditions Where Expansion Line Crosses Saturation Line. Assume 476.2 psia at the crossing point, which gives h_s = 1,204.05 Btu/lbm at 476.2 psia and s = 1.46773 Btu/lbm°R from steam tables.

Turbine section efficiency − dry basis = 87.05% [see paras. 9.4.7.1 and 9.4.7.1.1(g)]

Copyright ASME International
Provided by IHS under license with ASME
No reproduction or networking permitted without license from IHS
Not for Resale

$$\text{Efficiency} = \frac{h_i - h_o}{h_i - h_s}$$

$$0.8705 = \frac{1{,}209.5 - h_o}{1{,}209.5 - 1{,}204.05}$$

$$h_o = 1{,}204.8 \text{ Btu/lbm}$$

This point in the steam tables agrees with the assumed pressure of 476.2 psia. If agreement had not been reached a new pressure would have been assumed with successive iterations.

(f) Expansion Line Condition From Saturation Line to No. 5 Extraction: Stage Entering Conditions

	Steam Path Points	
	Saturation Line	No. 5 Heater
Pressure, psia	476.2	300.0 (assumed)
Enthalpy, Btu/lbm	1,204.8 (h_i)	h_1
Entropy, Btu/lbm°R	1.4685	. . .
Moisture	0.0	. . .

Turbine section efficiency – dry basis = 87.05% [see paras. 9.4.7.1 and 9.4.7.1.1(g)].

No. 5 heater extraction pressure must be assumed due to the change in the extraction flow while maintaining the test turbine pressure/flow relationship. This assumption will be checked in para. 9.5.1.1.1(i).

h_s = 1,166.0 Btu/lbm at 300.0 psia and s
= 1.4685 Btu/lbm°R from steam tables

$$0.8705 = \frac{1{,}204.8 - h_1}{1{,}204.8 - 1{,}166.0}$$

$$h_1 = 1{,}171.0 \text{ Btu/lbm (dry basis)}$$

This value gives extraction point entering moisture M_1 = 0.0384 at 300.0 psia and 1,171.0 Btu/lbm from steam tables.

$$\text{Turbine section average moisture} = \frac{(M_0 + M_1)}{2}$$

$$= \frac{(0.0 + 0.0384)}{2}$$

$$= 0.0192$$

where M_0 = moisture at saturation line

Correction factor to turbine section efficiency for average moisture

$$= 1.00 - 0.0192$$

$$= 0.9808$$

Corrected turbine section efficiency (wet basis)

$$= 87.05 \times 0.9808$$

$$= 85.13\%$$

First iteration to recalculate extraction point entering enthalpy, using corrected turbine section efficiency (wet basis)

$$0.8513 = \frac{1{,}204.8 - h_1}{1{,}204.8 - 1{,}166.0}$$

$$h_1 = 1{,}171.7 \text{ Btu/lbm}$$

This value gives extraction point entering moisture M_1 = 0.0386 at 300.0 psia and 1,171.7 Btu/lbm from steam tables.

Successive iterations using M_1 were made until resulting moisture differences were 0.0001, which resulted in

$$h_1 = 1{,}171.7 \text{ Btu/lbm}$$

$$M_1 = 0.0386$$

Turbine section efficiency (wet basis) = 85.37%

(g) Calculation of No. 5 Heater Extraction Flow (See Fig. 9.5)

(1) Specified Conditions

Pressure drop from turbine steam path to heater shell = 5%

Heater terminal temperature difference = 5°F

Drain cooler temperature difference = 10°F

(2) Assumptions (Checked Later). Turbine steam path pressure = 300.0 psia [first assumed in para. 9.5.1.1.1(f)] h_{ext5} = 1,182.5 Btu/lbm (calculated at assumed pressure of 300.0 psia from test extraction steam conditions of 300.2 psia and 1,182.5 Btu/lbm by drawing expansion line parallel to the turbine section expansion line).

t_{fi5} = 362.2°F

Copyright ASME International
Provided by IHS under license with ASME
No reproduction or networking permitted without license from IHS
Not for Resale

Determine t_{fo5} = 407.7°F (and h_{fo5} = 384.4 Btu/lbm) from terminal temperature difference applied to the heater saturation temperature as a function of heater shell pressure (285.0 psia), which was calculated from turbine steam path pressure (300.0 psia) as assumed, minus the specified pressure drop to heater. Determine t_{d5} = 372.2°F (and h_{d5} = 345.4 Btu/lbm) from the specified drain cooler temperature difference applied to the assumed No. 5 heater water inlet temperature. Determine h_{fi5} = 336.0 Btu/lbm from the assumed No. 5 water heater inlet temperature.

(3) Calculate No. 5 Heater Extraction Flow

$$w_{ext5} = \frac{w_{fi5}\,(h_{fo5} - h_{fi5}) - w_{d6}\,(h_{d6} - h_{d5})}{h_{ext5} - h_{d5}}$$

where

$w_{fi5} = w_{fo6}$ = 10,780,670 lbm/hr, see para. 9.5.1.1.1(b)

$w_{d6} = w_{ext6} + w_{rh1} + w_{rh2}$

= 636,084 + 430,708 + 388,560

= 1,455,352 lbm/hr, see para. 9.5.1.1.1(b)

h_{d6} = 394.5 Btu/lbm, see para. 9.5.1.1.1(b)

$$= \frac{10{,}780{,}670\,(384.4 - 336.0) - 1{,}455{,}352\,(394.5 - 345.4)}{1{,}182.5 - 345.4}$$

= *537,961 lbm/hr*

(h) Calculation of Steam Conditions at No. 5 Heater Extraction Stage (See Fig. 9.12)

(1) Known

Pressure = 300.0 psia [assumed in para. 9.5.1.1.1(f)]

w_1 = steam path through flow = 9,322,258 lbm/hr [w_2 from para. 9.5.1.1.1(c)]

h_1 = 1,171.7 Btu/lbm [para. 9.5.1.1.1(f)]

$w_3 = w_{ext5}$ = 537,961 lbm/hr [para. 9.5.1.1.1(g)]

$h_3 = h_{ext3}$ = 1,182.5 Btu/lbm [para. 9.5.1.1.1(g)]

w_2 = flow leaving No. 6 extraction stage

= $w_1 - w_3$ = 9,322,258 − 537,961(mass balance) = 8,784,297 lbm/hr

(2) Calculation of Enthalpy and Specific Volume Leaving No. 5 Heater Extraction Stage [Point (2)]

$w_1 \times h_1 = w_2 \times h_2 + w_3 \times h_3$ (heat balance)

$$h_2 = \frac{w_1 \times h_1 - w_3 \times h_3}{w_2}$$

$$= \frac{9{,}322{,}258 \times 1{,}171.7 - 537{,}961 \times 1{,}182.5}{8{,}784{,}297}$$

= 1,171.0 Btu/lbm

Specific volume, v = 1.4827 cu ft/lbm and moisture, M_2 = 0.0394 at 300.0 psia and 1,171.0 Btu/lbm from steam tables.

(i) Check assumed turbine steam path pressure at the No. 5 heater extraction stage [see para. 9.5.1.1.1(f)] by applying the test steam path pressure/flow relationship for No. 5 heater extraction stage to the specified cycle steam path flow leaving the No. 5 heater extraction stage calculated in para. 9.5.1.1.1(h).

$$\frac{w/\sqrt{p/v}}{\sqrt{1 - M}} = K$$

where

K = 630,725.5 (constant), see para. 9.4.7.3

$w = w_2$ = 8,784,297 lbm/hr, see para. 9.5.1.1.1(h)

v = 1.4827 cu ft/lbm, see para. 9.5.1.1.1(h)

M_2 = 0.0394, see para. 9.5.1.1.1(h)

p = stage pressure, psia

$$\frac{8{,}784{,}297/\sqrt{p/1.4827}}{\sqrt{1 - 0.0394}} = 630{,}725.5$$

$$p = 299.5 \text{ psia}$$

This value checks the assumed pressure. If the assumed pressure is not correct within 1% or 1.0 psi, whichever is smaller, iterations using a new assumed pressure must be made for No. 5 heater extraction stage entering conditions with subsequent repeat calculations until agreement is reached.

Because the assumed extraction pressure needs not to be revised and there are no water removal provisions at this location (extraction enthalpy is higher than steam path enthalpy), the assumed extraction enthalpy also needs not to be revised.

(j) Calculation of Expansion Line From No. 5 Heater Extraction Stage: Leaving Conditions to High Pressure Turbine Exhaust Conditions

	Steam Path Points	
	No. 5 Heater	HP Exhaust
Pressure, psia	300.0	175.1 (assumed)
Enthalpy, Btu/lbm	1,171.0 (h_i)	h_1
Entropy, Btu/lbm°R	1.4742	. . .
Moisture	0.0394	. . .

Copyright ASME International
Provided by IHS under license with ASME
No reproduction or networking permitted without license from IHS
Not for Resale

Turbine section efficiency – dry basis = 87.05%; see paras. 9.4.7.1 and para. 9.4.7.1.1(g)

HP turbine exhaust pressure must be assumed due to the change in the extraction flow while maintaining the test turbine pressure/flow relationship. This pressure level is dependent on LP inlet pressure. Therefore, this assumption will be checked in para. 9.5.1.1.2(a) by checking LP inlet pressure. This pressure will need to be revised if LP inlet pressure is revised.

h_s = 1,128.0 Btu/lbm at 175.1 psia and s
= 1.4742 Btu/lbm°R from steam tables

$$0.8705 = \frac{1{,}171.0 - h_1}{1{,}171.0 - 1{,}128.0}$$

$$h_1 = 1{,}133.6 \text{ Btu/lbm (dry basis)}$$

This value gives high pressure blading exhaust moisture M_1 = 0.0737 at 175.1 psia and 1,133.6 Btu/ lbm from steam tables.

$$\text{Turbine section average moisture} = \frac{M_2 + M_1}{2}$$

$$= \frac{0.0394 + 0.0737}{2}$$

$$= 0.0566$$

where

M_2 = No. 5 heater stage leaving moisture

Correction factor to turbine section efficiency for average moisture:

$$= 1.00 - 0.0566$$

$$= 0.9434$$

Corrected turbine section efficiency (wet basis):

$$= 87.05 \times 0.9434$$

$$= 82.12\%$$

First iteration to recalculate high pressure turbine blading exhaust enthalpy, using corrected turbine section efficiency (wet basis)

$$0.8212 = \frac{1{,}171.0 - h_1}{1{,}171.0 - 1{,}128.0}$$

$$h_1 = 1{,}135.7 \text{ Btu/lbm}$$

This value gives high pressure turbine blading exhaust point moisture M_1 = 0.0713 at 175.1 psia and 1,135.7 Btu/lbm from steam tables.

Second iteration using M_1 = 0.0713 to calculate turbine section average moisture correction, resulted in

$$h_1 = 1{,}135.64 \text{ Btu/lbm}$$

$$M_1 = 0.0713$$

Turbine section efficiency (wet basis) = 82.23%

(k) Calculation of No. 4 Heater Extraction Flow (See Fig. 9.6)

(1) Specified Conditions

Pressure drop from turbine steam path to heater shell = 5%

Heater terminal temperature difference = 5°F

Drain cooler temperature difference = 10°F

(2) Assumptions (Checked Later)

Turbine steam path pressure = 175.1 psia [assumed in para. 9.5.1.1.1(j)] h_{ext4} = 1,097.8 Btu/ lbm (same as test data, see Fig. 9.2) h_{fi4} = 256.9 Btu/lbm

Determine t_{fo4} = 361.7°F (and h_{fi4} = 334.1 Btu/ lbm) from terminal temperature difference applied to the heater saturation temperature as a function of heater shell pressure (166.3 psia), which was calculated from turbine steam path pressure (175.1 psia) as assumed, minus the specified pressure drop to heater. Determine t_{ci4} = 287.1°F from the assumed No. 4 water heater inlet enthalpy. Determine t_{d4} = 297.1°F (and h_{d4} = 266.9 Btu/lbm) from the specified drain cooler temperature difference applied to the assumed No. 4 heater water inlet temperature.

(3) Calculate No. 4 Heater Extraction Flow

$$w_{ext4} = \frac{w_{fi4}\,(h_{fo4} - h_{fi4}) - w_{d5}\,(h_{d5} - h_{d4}) - w_{msd}\,(h_{msd} - h_{d4}) - w_{hplo}\,(h_{hplo} - h_{d4})}{h_{ext4} - h_{d4}}$$

where

$w_{fi4} = w_{fo6}$ = 10,780,670 lbm/hr, see para. 9.5.1.1.1(b)

$w_{d5} = w_{d6} + w_{ext5}$

= 1,455,352 + 537,961

= 1,993,313 lbm/hr, see para. 9.5.1.1.1(g)

h_{d5} = 345.4 Btu/lbm, see para. 9.5.1.1.1(g)

$$w_{ext4} = \frac{10{,}780{,}670\,(334.1 - 256.9) - 1{,}993{,}313\,(345.4 - 266.9) - 521{,}834\,(342.9 - 266.9) - 1{,}580\,(1{,}255.1 - 266.9)}{1{,}097.8 - 266.9}$$

= 763,716 lbm/hr

Copyright ASME International
Provided by IHS under license with ASME
No reproduction or networking permitted without license from IHS
Not for Resale

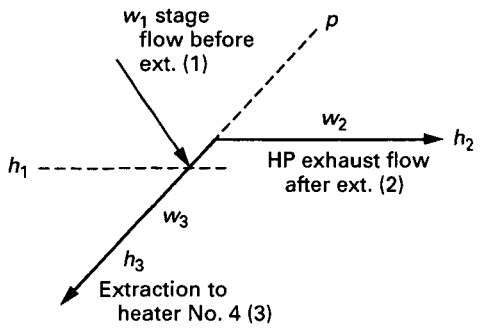

FIG. 9.19 EXPANSION LINE AND STEAM CONDITIONS LEAVING NO. 4 HEATER EXTRACTION STAGE POINT

(l) Calculation of Steam Conditions at No. 4 Heater Extraction Stage (See Fig. 9.19)

(1) Known

Pressure = 175.1 psia [assumed in para. 9.5.1.1.1(j)]

w_1 = high pressure turbine blading exhaust flow

= 8,784,297 lbm/hr [w_2 from para. 9.5.1.1.1(h)]

h_1 = 1135.64 Btu/lbm, see para. 9.5.1.1.1(j)

$w_3 = w_{ext4}$ = 763,716 lbm/hr, see para. 9.5.1.1.1(k)

$h_3 = h_{ext3}$ = 1,097.8 Btu/lbm [assumed in para. 9.5.1.1.1(k)]

w_2 = high pressure turbine exhaust flow to moisture separator and shaft packing leakoffs

$= w_1 - w_3$ = 8,784,297 − 763,716 (mass balance)

= 8,020,581 lbm/hr

(2) Calculation of Enthalpy of High Pressure Turbine Exhaust Flow to Moisture Separator and Shaft Packing Leakoffs [Point (2)]

$$w_1 \times h_1 = w_2 \times h_2 + w_3 \times h_3 \text{ (heat balance)}$$

$$h_2 = \frac{w_1 \times h_1 - w_3 \times h_3}{w_2}$$

$$= \frac{8{,}784{,}297 \times 1{,}135.64 - 763{,}716 \times 1{,}097.8}{8{,}020{,}581}$$

= 1,139.2 Btu/lbm

(m) Calculation of Moisture Separator Drain Flow

(1) Known

High pressure turbine exhaust flow to moisture separator and shaft packing leakoff = 8,020,581 lbm/hr, see para. 9.5.1.1.1(l)

High pressure turbine flow enthalpy to moisture separator (MS) = 1,139.2 Btu/lbm, see para. 9.5.1.1.1(l)

High pressure exhaust pressure = 175.1 psia, see para. 9.5.1.1.1(j)

Reheat steam pressure at MS = 171.6 psia (2% pressure drop from high pressure exhaust to MS − same as test)

Reheat steam moisture at MS = 0.0666 (moisture at 171.6 psia and 1,139.2 Btu/lbm from steam tables)

Moisture carryover from MS = 0.0012 [from para. 9.4.3(c)]

Reheat steam enthalpy at moisture separator exit = 1,195.1 Btu/lbm (enthalpy at 171.6 psia and 0.0012 moisture from steam tables)

(2) Calculations

High pressure turbine exhaust flow to moisture separator = $w_2 - w_{hpslo1} - w_{hpslo2} - w_{lpslo1} - w_{lpslo2}$ (mass balance)

= 8,020,581 − 19,766 − 917 − 19,862 − 917

= 7,979,119 lbm/hr

Moisture separator drain flow = 7,979,119 (0.0666 − 0.0012)

= 521,834 lbm/hr

Copyright ASME International
Provided by IHS under license with ASME
No reproduction or networking permitted without license from IHS
Not for Resale

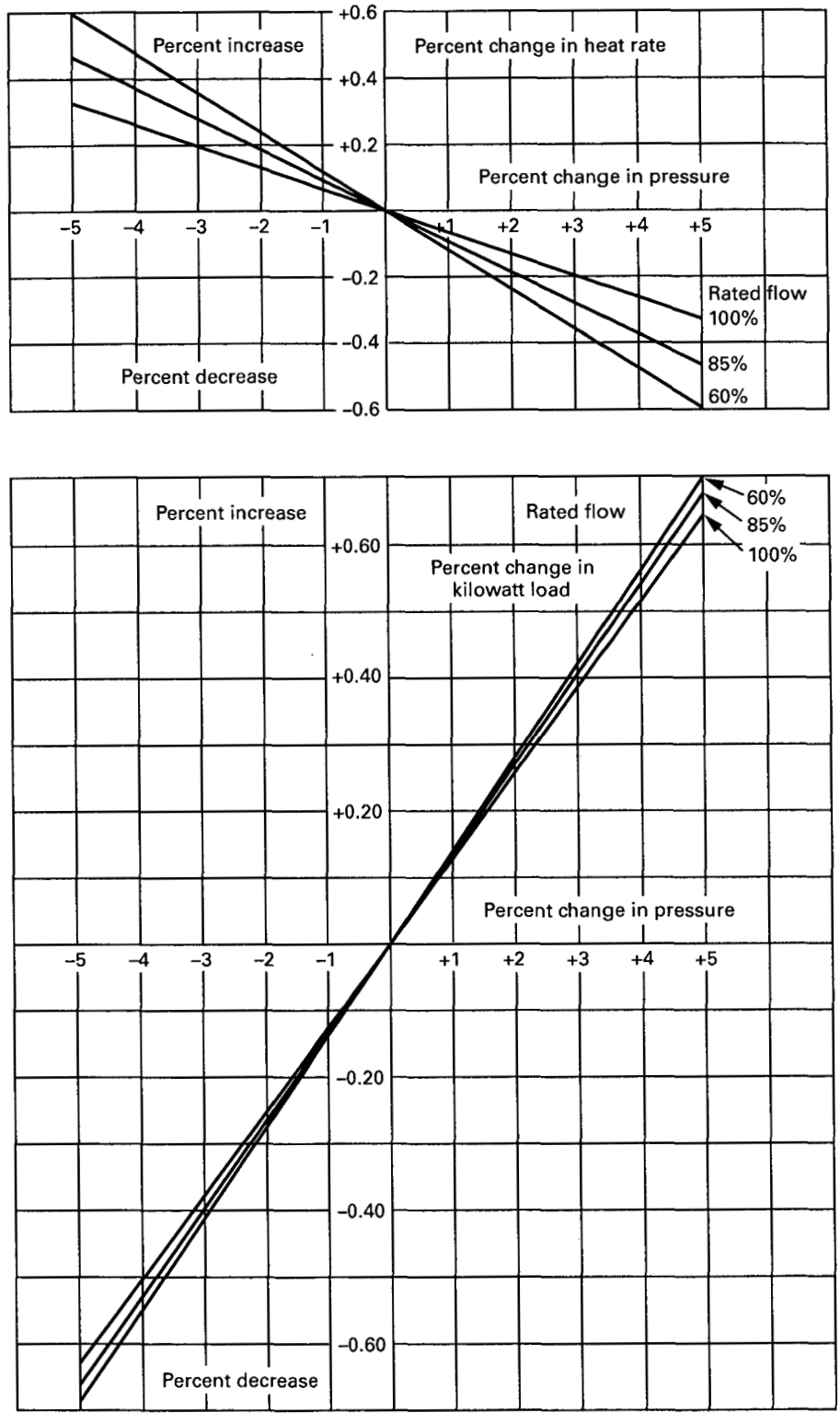

FIG. 9.20 THROTTLE PRESSURE CORRECTION TO HEAT RATE AND LOAD

Copyright ASME International
Provided by IHS under license with ASME
No reproduction or networking permitted without license from IHS
Not for Resale

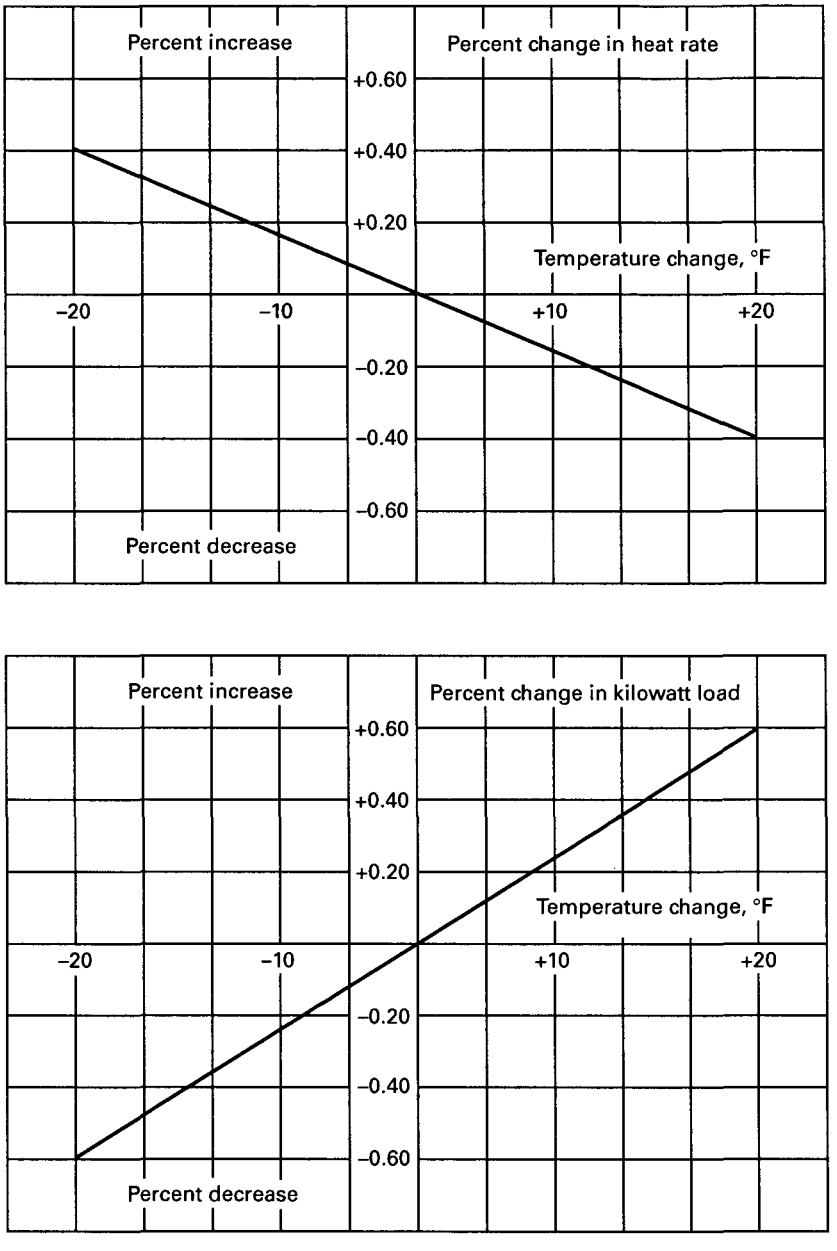

FIG. 9.21 THROTTLE TEMPERATURE CORRECTION TO HEAT RATE AND LOAD

Copyright ASME International
Provided by IHS under license with ASME
No reproduction or networking permitted without license from IHS
Not for Resale

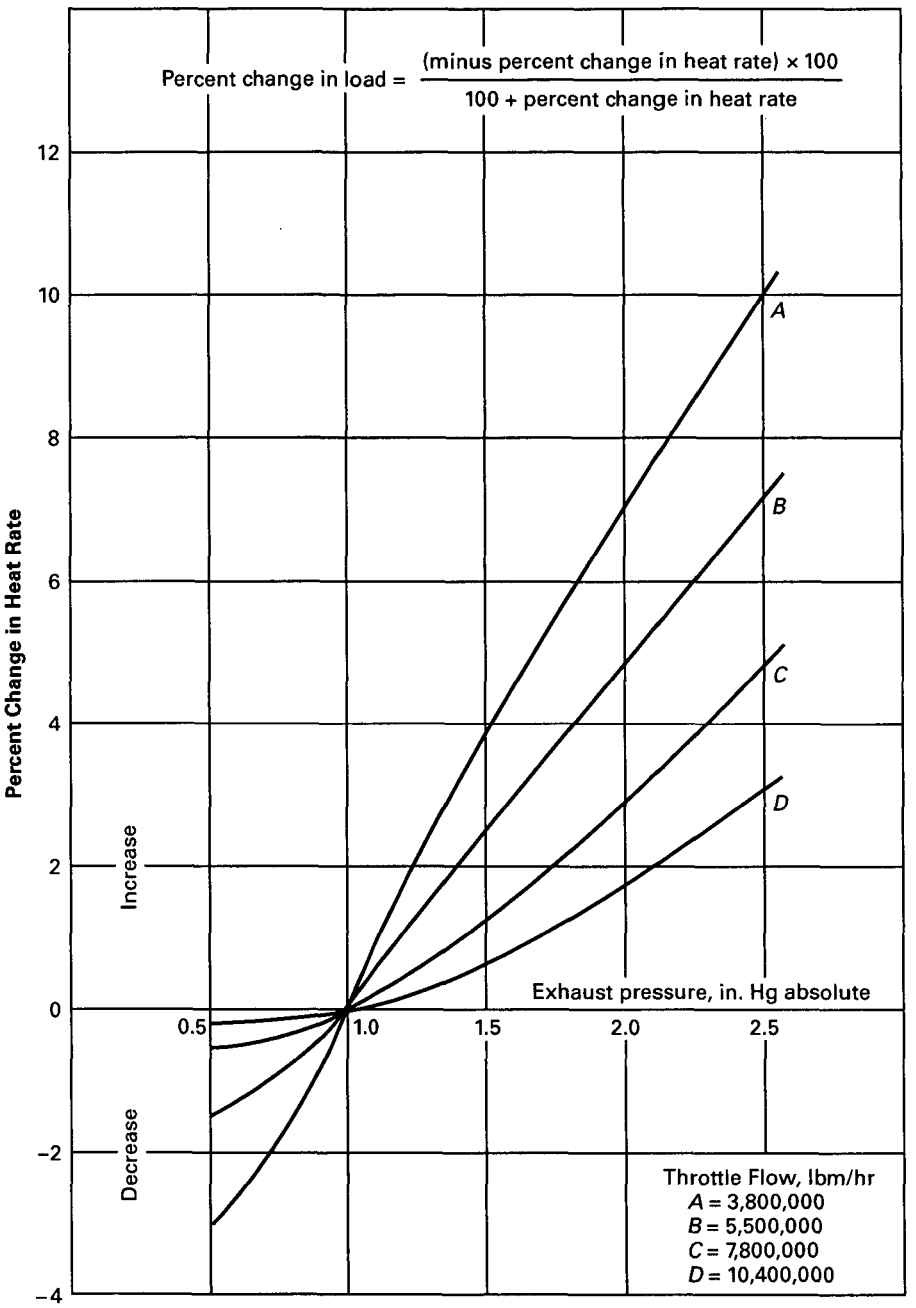

FIG. 9.22 EXHAUST PRESSURE CORRECTION TO HEAT RATE

Copyright ASME International
Provided by IHS under license with ASME
No reproduction or networking permitted without license from IHS
Not for Resale

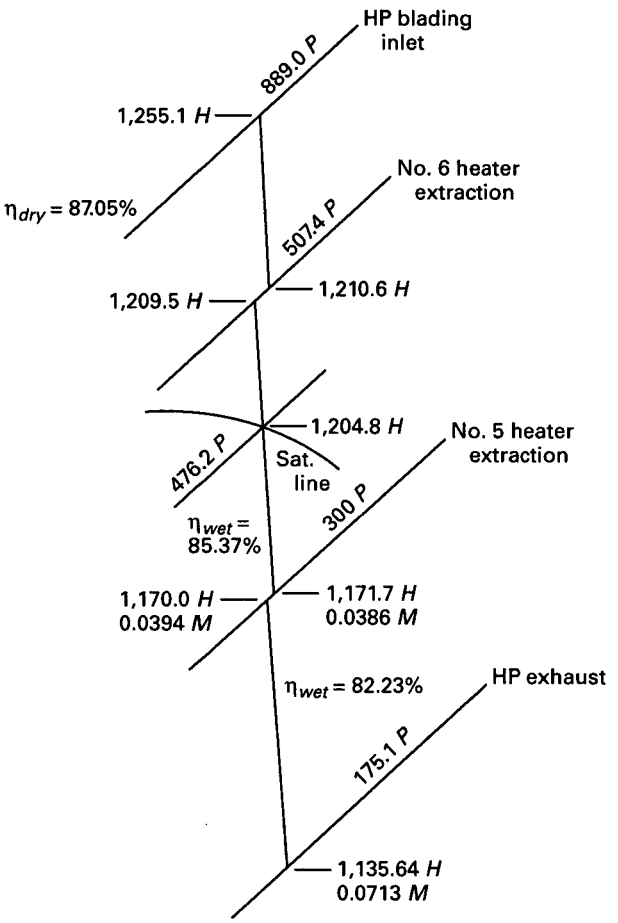

FIG. 9.23 H-S DIAGRAM FROM TEST TURBINE IN SPECIFIED CYCLE, HIGH PRESSURE TURBINE

Copyright ASME International
Provided by IHS under license with ASME
No reproduction or networking permitted without license from IHS
Not for Resale

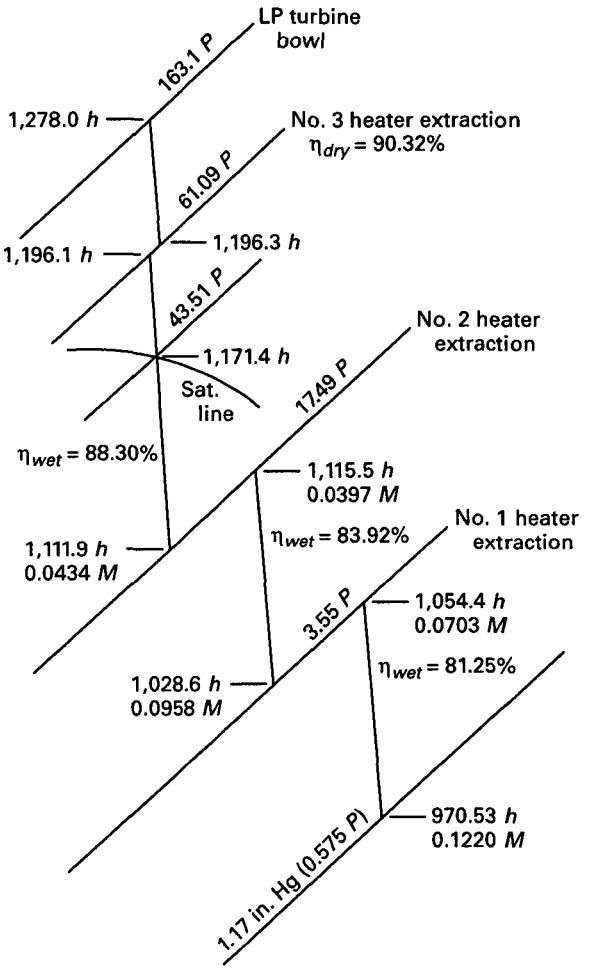

FIG. 9.24 H-S DIAGRAM FROM TEST TURBINE IN SPECIFIED CYCLE, LOW PRESSURE TURBINE

Copyright ASME International
Provided by IHS under license with ASME
No reproduction or networking permitted without license from IHS
Not for Resale

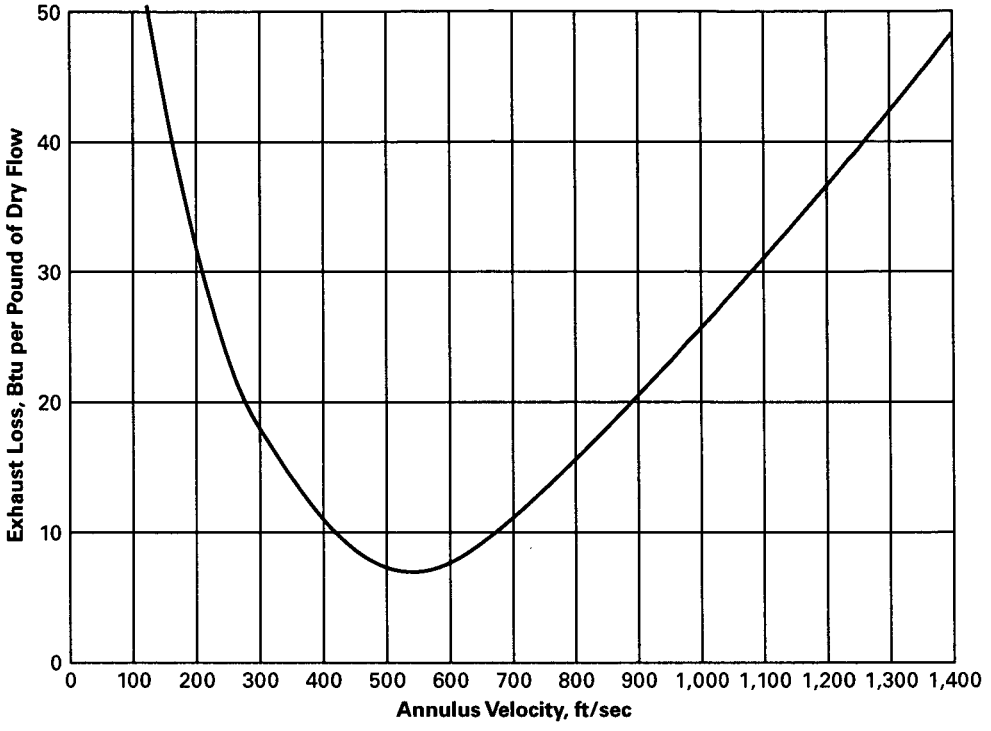

FIG. 9.25 EXHAUST LOSS

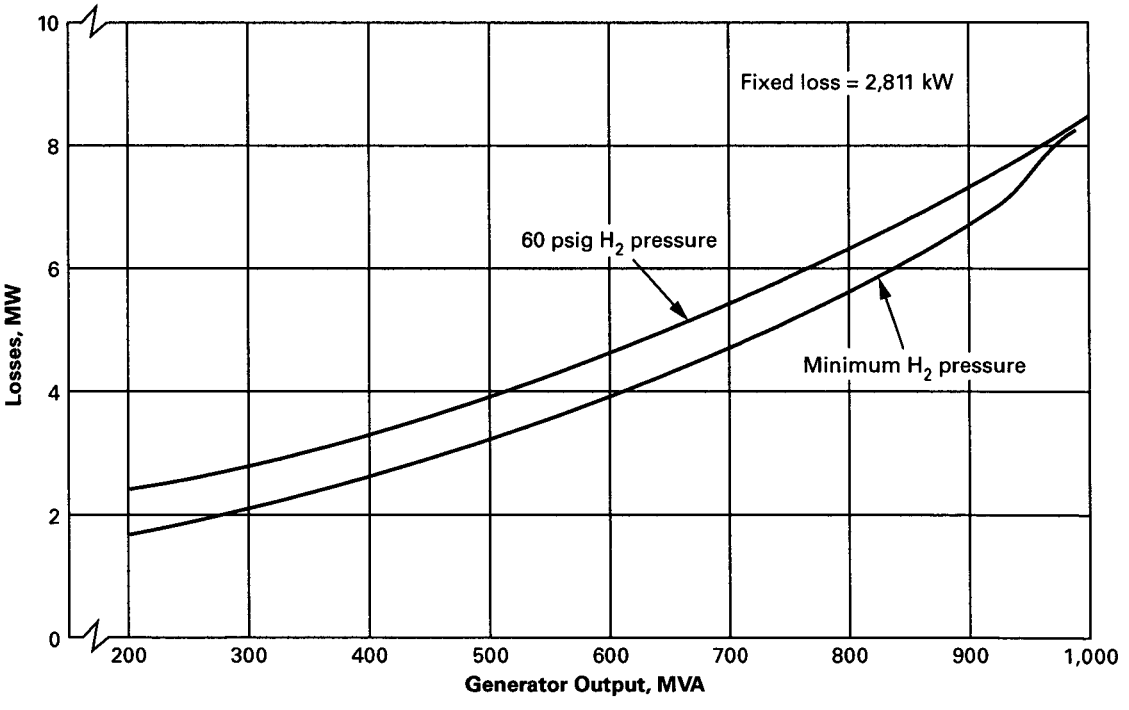

FIG. 9.26 GENERATOR LOSSES

Copyright ASME International
Provided by IHS under license with ASME
No reproduction or networking permitted without license from IHS
Not for Resale

$$\text{Reheater steam flow} = 7{,}979{,}119 - 521{,}834$$
$$= 7{,}457{,}285 \text{ lbm/hr}$$

(n) Calculation of Heating Steam Flow to First Stage Reheater. The heating steam flow to first stage reheater (w_{rh1}) was calculated from heat and mass balances around the first stage reheater as follows (see Fig. 9.10):

(1) Known

First stage reheater steam supply pressure (2.0% pressure drop from extraction point to reheater)	= 171.6 psia
First stage reheater heating steam enthalpy (h_5)	= 1,220.4 Btu/lbm
First stage reheater drain flow enthalpy (h_{rh1})	= 443.0 Btu/lbm
First stage reheater terminal temperature difference	= 21.6°F [see para. 9.4.3(d)]
First stage reheater supply steam pressure [5.0% pressure drop from extraction pressure at blade path (507.4 psia)]	= 482.0 psia
First stage reheater supply steam saturation temperature	= 463.3°F
First stage reheater steam outlet temperature	= 463.3 − 21.6 = 441.7°F
First stage reheater steam outlet enthalpy (h_6)	= 1,240.0 Btu/lbm
First stage reheater inlet steam enthalpy (h_3)	= 1,195.1 Btu/lbm, see para. 9.5.7.1.1(m)
Reheater flow (w_3)	= 7,457,285 lbm/hr, see para. 9.5.7.1.1(m)

(2) Calculations

$$w_3 (h_6 - h_3) = w_{rh1} (h_5 - h_{rh1}) \text{ (heat balance)}$$

$$w_{rh1} = \frac{w_3 (h_6 - h_3)}{(h_5 - h_{rh1})}$$

$$= \frac{7{,}457{,}285 (1{,}240.0 - 1{,}195.1)}{1{,}220.4 - 443.0}$$

$$= 430{,}708 \text{ lbm/hr}$$

(o) Calculate Heating Steam Flow to Second Stage Reheater. The heating steam flow to second stage reheater (w_{rh2}) was calculated from heat and mass balances around the second stage reheater as follows (see Fig. 9.10):

(1) Known

Second stage reheater steam supply pressure (3.0% pressure drop from HP exhaust to reheater)	= 169.8 psia
Second stage reheater heating steam enthalpy (h_1)	= 1,255.1 Btu/lbm
Second stage reheater drain flow enthalpy (h_{rh2})	= 525.8 Btu/lbm
Second stage reheater terminal temperature difference	= 20.4°F, see para. 9.4.3(c)
Second stage reheater supply steam pressure [2.0% pressure drop from main steam pressure at throttle (907.1 psia)]	= 889.0 psia
Second stage reheater supply steam saturation temperature	= 530.5°F
Second stage reheater steam outlet temperature	= 530.5 − 20.4 = 510.1°F
Second stage reheater steam outlet enthalpy (h_4)	= 1,278.0 Btu/lbm
Second stage reheater inlet steam enthalpy (h_6)	= 1,240.0 Btu/lbm, see para. 9.5.1.1.1(n)
Reheater flow (w_3)	= 7,457,285 lbm/hr, see para. 9.5.1.1.1(m)

(2) Calculations

$$w_3 (h_4 - h_6) = w_{rh2} (h_1 - h_{rh2}) \text{ (heat balance)}$$

$$w_{rh2} = \frac{w_3 (h_6 - h_3)}{h_1 - h_{rh2}} = \frac{7{,}457{,}285 (1{,}278.0 - 1{,}240.0)}{1{,}255.1 - 525.8}$$

$$= 388{,}560 \text{ lbm/hr}$$

9.5.1.1.2 Calculation of Low Pressure Turbine in Specified Cycle

(a) Check assumed turbine pressure at the low pressure turbine inlet by applying the test steam path pressure/flow relationship for low pressure turbine inlet to the specified cycle steam flow entering the low pressure turbine calculated in para. 9.5.1.1.1(m).

(b) Specific volume, $v = 3.3439$ cu ft/lbm at 166.4 psia and 1,278.0 Btu/lbm from steam tables.

$$\frac{w/\sqrt{p/v}}{\sqrt{1 - M}} = K$$

where

$K = 1{,}055{,}948.0$ (constant), see para. 9.4.7.3

Copyright ASME International
Provided by IHS under license with ASME
No reproduction or networking permitted without license from IHS
Not for Resale

$w = w_2 = 7{,}457{,}285$ lbm/hr, see para. 9.5.1.1.1(m)
$v = 3.3439$ cu ft/lbm
$M = 0.0$
$p =$ stage pressure, psia

$$\frac{7{,}457{,}285/\sqrt{p/3.3439}}{\sqrt{1.00 - 0.0}} = 1{,}055{,}948.0$$

$$p = 166.8 \text{ psia}$$

This value checks the assumed pressure. If the assumed pressure is not correct within 1% or 1.0 psi, whichever is smaller, iterations using a new assumed pressure must be made for low pressure turbine inlet conditions with subsequent repeat calculations until agreement is reached.

Because low pressure turbine inlet pressure need not be revised, high pressure turbine exhaust pressure also needs no revision.

Low pressure turbine expansion initial conditions are presented in the following table:

	Low Pressure Turbine	
	Inlet	Bowl
Pressure, psia	166.4	163.1 (166.4 x 0.98) Used 2% pressure drop through intercept valves
Enthalpy, Btu/lbm	1,278.0	1,278.0
Entropy, Btu/lbm°R	. . .	1.65507

From test cycle calculations use low pressure turbine efficiency – dry basis = 90.32% [see opening section of paras. 9.4.7.2 and 9.4.7.2.1(j)]

(c) Expansion Line Condition From Inlet to No. 3 Heater Extraction Stage. Entering conditions are as follows:

	Steam Path Points	
	LP Bowl	No. 3 Heater
Pressure, psia	163.1	61.09 (assumed)
Enthalpy, Btu/lbm	1,278.0 (h_i)	h_1
Entropy, Btu/lbm°R	1.65507	. . .
Moisture	0.0	. . .

Turbine section efficiency – dry basis = 90.32% [see paras. 9.4.7.2 and 9.4.7.2.1(j)]

No. 3 heater extraction pressure must be assumed due to the change in the extraction flow while maintaining the test turbine pressure/flow relationship. This assumption will be checked in para. 9.5.1.1.2(f).

$$\text{Efficiency} = \frac{h_i - h_1}{h_i - h_s}$$

$h_s = 1{,}187.5$ Btu/lbm at 61.09 psia and s = 1.65507 Btu/lbm°R from the steam tables

$$0.9032 = \frac{1{,}278.0 - h_1}{1{,}278.0 - 1{,}187.5}$$

$$h_1 = 1{,}196.3 \text{ Btu/lbm}$$

This value puts extraction point in the superheated region at 61.09 psia and 1,196.3 Btu/lbm from the steam tables.

(d) Calculation of No. 3 Heater Extraction Flow (See Fig. 9.7)

(1) Specified Conditions

Pressure drop from turbine steam path to heater shell = 5%

Heater terminal temperature difference = 5°F

Drain cooler temperature difference – does not apply, since there is no drain cooler.

(2) Assumptions (Checked Later)

Turbine steam path pressure = 61.09 psia [first assumed in para. 9.5.1.1.2(c)]

$h_{ext3} = 1{,}197.9$ Btu/lbm (calculated at assumed pressure of 61.09 psia from test extraction steam conditions of 61.03 psia and 1,197.8 Btu/lbm by drawing expansion line parallel to the turbine section expansion line).

$h_{fi3} = 182.8$ Btu/lbm [checked in para. 9.5.1.1.2(i)]

Determine $t_{fo3} = 285.5$°F (and $h_{fo3} = 255.3$ Btu/lbm) from terminal temperature difference applied to the heater saturation temperature as a function of heater shell pressure (58.036 psia), which was calculated from turbine steam path pressure (61.09 psia) as assumed, minus the specified pressure drop to heater. Determine $t_{d3} = 290.5$°F (and $h_{d3} = 259.9$ Btu/lbm) from the specified drain cooler temperature difference applied to the assumed No. 3 heater water inlet temperature.

$w_{fi4} = 10{,}780{,}670$ lbm/hr

$h_{fi4} = 256.9$ Btu/lbm [assumed in para. 9.5.1.1.1(l)]

Steam supplied to feedwater pump turbine = 125,354 lbm/hr (Used same as test in this example; could be revised based on specified feedwater pump turbine and pump efficiencies if these are supplied by other than turbine manufacturer)

Copyright ASME International
Provided by IHS under license with ASME
No reproduction or networking permitted without license from IHS
Not for Resale

$$w_{d4} = 1{,}993{,}313 + 1{,}580 + 763{,}716 + 521{,}834$$

(3) Calculation of No. 3 Heater Steam Flow

$$w_3 = \frac{w_{fi4}\,(h_{fi4} - h_{fi3}) - w_{d4}\,(h_{d4} - h_{fi3})}{h_3 - h_{fi3}}$$

$$= \frac{10{,}780{,}670\,(256.9 - 182.8) - 3{,}280{,}443\,(266.9 - 182.8)}{1{,}197.9 - 182.8}$$

$$= 515{,}183 \text{ lbm/hr}$$

(4) Calculation of No. 3 Heater Extraction Flow

$$w_{ext3} = w_3 + \text{steam to feedwater pump turbine}$$

$$= 515{,}183 + 125{,}354$$

$$= 640{,}537 \text{ lbm/hr}$$

(5) Calculation of Condensate Flow Entering No. 3 Heater

$$w_{fi3} = w_{fi4} - w_{d4} - w_3$$

$$= 10{,}780{,}670 - 3{,}280{,}443 - 515{,}183$$

$$= 6{,}985{,}044 \text{ lbm/hr}$$

(e) Calculation of Steam Conditions at No. 3 Heater Extraction Stage

(1) Known

Pressure = 61.09 psia [assumed in para. 9.5.1.1.2(c)]

w_1 = steam path through flow = low pressure turbine inlet flow = 7,457,285 lbm/hr

h_1 = 1,196.2 Btu/lbm, see para. 9.5.1.1.2(c)

$w_3 = w_{ext3}$ = 640,537 lbm/hr, see para. 9.5.1.1.2(d)

$h_3 = h_{ext3}$ = 1,197.9 Btu/lbm [assumed in para. 9.5.1.1.2(d)]

w_2 = Flow leaving No. 3 extraction stage

$= w_1 - w_3 = 7{,}457{,}285 - 640{,}537$ (mass balance)

$= 6{,}816{,}748$ lbm/hr

(2) Calculate Enthalpy and Specific Volume Leaving No. 3 Heater Extraction Stage [Point (2)]

$$w_1 \times h_1 = w_2 \times h_2 + w_3 \times h_3 \text{ (heat balance)}$$

$$h_2 = \frac{w_1 \times h_1 - w_3 \times h_3}{w_2}$$

$$= \frac{7{,}457{,}285 \times 1{,}196.3 - 640{,}537 \times 1{,}197.9}{6{,}816{,}748}$$

$$= 1{,}196.1 \text{ Btu/lbm}$$

Specific volume, v = 7.4301 cu ft/lbm at 61.09 psia and 1,196.1 Btu/lbm from steam tables.

(f) Check assumed turbine steam path pressure at the No. 3 heater extraction stage [see para. 9.5.1.1.2(c)] by applying the test steam path pressure/flow relationship for No. 3 heater extraction stage to the specified cycle steam path flow leaving the No. 3 heater extraction stage calculated in para. 9.5.1.1.2(e).

$$\frac{w/\sqrt{p/v}}{\sqrt{1 - M}} = K$$

where

K = 2,367,142.4 (constant), see para. 9.4.7.3

$w = w_2$ = 6,816,748 lbm/hr, see para. 9.5.1.1.2(e)

v = 7.4301 cu ft/lbm, see para. 9.5.1.1.2(e)

M = moisture = 0.0 (superheated steam)

p = stage pressure, psia

$$\frac{6{,}816{,}748/\sqrt{p/7.4301}}{\sqrt{1 - 0.0}} = 2{,}367{,}142.4$$

$$p = 61.62 \text{ psia}$$

This value checks the assumed pressure. If the assumed pressure is not correct within 1% or 1.0 psi, whichever is smaller, iterations using a new assumed pressure must be made for No. 3 heater extraction stage entering conditions with subsequent repeat calculations until agreement is reached.

Because the assumed extraction pressure (same as test) needs not be revised and the steam conditions upstream of this extraction zone are superheated, the assumed extraction enthalpy (same as test) also needs not to be revised.

(g) Steam Conditions Where Expansion Line Crosses Saturation Line. Assume 43.51 psia at the crossing point, which gives h_s = 1,168.7 Btu/lbm at 43.51 psia and s = 1.66612 Btu/lbm°R from steam tables.

Copyright ASME International
Provided by IHS under license with ASME
No reproduction or networking permitted without license from IHS
Not for Resale

Turbine section efficiency – dry basis = 90.32% [same as test, see para. 9.4.7.2 and para. 9.4.7.2(j)]

$$\text{Efficiency} = \frac{h_I - h_o}{h_i - h_s}$$

$$0.9032 = \frac{1{,}196.1 - h_o}{1{,}196.1 - 1{,}168.7}$$

$$h_o = 1{,}171.4 \text{ Btu/lbm}$$

This point in the steam tables agrees with the assumed pressure of 43.51 psia. If agreement had not been reached, a new pressure would have been assumed with successive iterations.

(h) Calculation of Expansion Line Condition From Saturation Line to No. 2 Extraction. Stage entering conditions are as follows:

	Steam Path Points	
	Saturation Line	No. 2 Heater
Pressure, psia	43.51	17.49 (assumed)
Enthalpy, Btu/lbm	1,171.4 (h_i)	h_1
Entropy, Btu/lbm°R	1.66975	. . .

Turbine section efficiency – dry basis = 90.32% [see para. 9.4.7.2 and para. 9.4.7.2.1(j)]

No. 2 heater extraction pressure must be assumed due to the change in the extraction flow while maintaining the test turbine pressure/flow relationship. This assumption will be checked in para. 9.5.1.1.2(k).

$$\text{Efficiency} = \frac{h_i - h_1}{h_i - h_s}$$

h_s = 1,104.0 Btu/lbm at 17.49 psia and s = 1.66975 Btu/lbm°R from steam tables

$$0.9032 = \frac{1{,}171.4 - h_1}{1{,}171.4 - 1{,}104.0}$$

$$h_1 = 1{,}110.6 \text{ Btu/lbm (dry basis)}$$

This value gives extraction point entering moisture M_1 = 0.0448 at 17.49 psia and 1,110.6 Btu/lbm from steam tables.

$$\text{Turbine section average moisture} = \frac{(M_2 + M_1)}{2}$$

$$= \frac{(0.0 + 0.0448)}{2}$$

$$= 0.0224$$

where

M_2 = moisture at saturation line

Correction factor to turbine section efficiency for average moisture

$$= 1.00 - 0.0224$$

$$= 0.9776$$

Corrected turbine section efficiency (wet basis)

$$= 90.32 \times 0.9776$$

$$= 88.30\%$$

First iteration to recalculate extraction point entering enthalpy, using corrected turbine section efficiency (wet basis)

$$0.8830 = \frac{1{,}171.4 - h_1}{1{,}171.4 - 1{,}104.0}$$

$$h_1 = 1{,}111.9 \text{ Btu/lbm}$$

This value gives extraction point entering moisture M_1 = 0.0434 at 15.49 psia and 1,111.9 Btu/lbm from steam tables.

Successive iterations using M_1 were made until resulting moisture differences were less than 0.0001, which resulted in

$$h_1 = 1{,}111.9 \text{ Btu/lbm}$$

$$M_1 = 0.0434$$

(i) Calculation of No. 2 Heater Extraction Flow (See Fig. 9.8)

(1) Specified Conditions

Pressure drop from turbine steam path to heater shell = 5%

Heater terminal temperature difference = 5°F

Drain cooler temperature difference – does not apply, since there is no drain cooler.

Copyright ASME International
Provided by IHS under license with ASME
No reproduction or networking permitted without license from IHS
Not for Resale

(2) Assumptions (Checked Later)

Turbine steam path pressure = 17.49 psia [assumed first in para. 9.5.1.1.2(h)]

h_{ext2} = 1,069.3 Btu/lbm

h_{ci2} = 110.5 Btu/lbm

(3) Calculation of No. 2 Heater Extraction Flow

$$w_{ext2} = \frac{w_{fi3}\,(h_{fi3} - h_{ci2})}{h_{ext2} - h_{ci2}}$$

$$= \frac{6{,}985{,}044\ (182.8 - 110.5)}{1{,}069.3 - 110.5}$$

$$= 526{,}720 \text{ lbm/hr}$$

(4) Calculation of Condensate Flow Leaving No. 2 Heater

$$w_{co2} = w_{fi3} - w_{d2}$$

where

$w_{d2} = w_{ext2}$

w_{co2} = 6,985,044 − 526,720

= 6,458,324 lbm/hr

Determine t_{co2} = 213.3°F (and h_{co2} = 182.5 Btu/lbm) from terminal temperature difference applied to the heater saturation temperature as a function of heater shell pressure (16.62 psia), which was calculated from turbine steam path pressure (17.49 psia) as initially assumed in para. 9.5.1.1.2(h), minus the specified pressure drop to heater.

Check h_{fi3}, which was assumed in No. 3 heater calculation [see para. 9.5.1.1.2(d)] by heat balance at pumped ahead drain/condensate mix point.

$$h_{fi3} = \frac{(w_{co2} \times h_{co2}) + (w_{d2} \times h_{d2})}{w_{fi3}}$$

$$= \frac{(6{,}458{,}324 \times 182.5) + (526{,}720 \times 186.5)}{6{,}985{,}044}$$

$$= 182.8 \text{ Btu/lbm}$$

This checks with the assumed enthalpy. If the assumed enthalpy were not correct, iteration on a new assumption would be required for No. 3 heater with subsequent repeat calculations until agreement is reached.

(j) Calculation of Steam Conditions at No. 2 Heater Extraction Stage (See Fig. 9.14)

(1) Known

Pressure = 17.49 psia [assumed in para. 9.5.1.1.2(h)]

w_1 = 6,816,748 lbm/hr (steam path through flow), see para. 9.5.1.1.2(e)

h_1 = 1,111.9 Btu/lbm, see para. 9.5.1.1.2(h)

$w_3 = w_{ext2}$ = 526,720 lbm/hr, see para. 9.5.1.1.2(i)

E_2 = 8.55% (from test cycle), see para. 9.4.7.2.1(d)

h_{s3} = 1,153.8 Btu/lbm (saturated steam at 17.49 psia)

h_{w3} = 189.1 Btu/lbm (saturated water at 17.49 psia)

(2) Calculation of Moisture Leaving No. 2 Heater Extraction Stage [Point (2)]

$$E_2 = \frac{M_1 - M_2}{M_1}$$

$$0.0855 = \frac{0.0434 - M_2}{0.0434}$$

$$M_2 = 0.0397$$

(3) Calculation of Flow Leaving No. 2 Heater Extraction Stage [Point (2)]

$$w_2 = w_1 - w_3 \text{ (mass balance)}$$

$$= 6{,}816{,}748 - 526{,}720$$

$$= 6{,}290{,}028 \text{ lbm/hr}$$

(4) Calculation of Enthalpy of No. 2 Heater Extraction

$$w_{w2} = w_2 \times M_2$$

$$= 6{,}290{,}028 \times 0.0397$$

$$= 249{,}714 \text{ lbm/hr (moisture)}$$

$$w_{w1} = w_1 \times M_1$$

$$= 6{,}816{,}748 \times 0.0434$$

$$= 295{,}847 \text{ lbm/hr (moisture)}$$

$$w_{w3} = w_{w1} - w_{w2}$$

$$= 295{,}847 - 249{,}714$$

$$= 46{,}133 \text{ lbm/hr (moisture)}$$

$$w_3 = w_{s3} + w_{w3} \text{ (mass balance)}$$

$$526{,}720 = w_{s3} + 46{,}133$$

$$w_{s3} = 480{,}587 \text{ lbm/hr}$$

Copyright ASME International
Provided by IHS under license with ASME
No reproduction or networking permitted without license from IHS
Not for Resale

$$w_3 \times h_3 = (w_{s3} \times h_{s3}) + (w_{w3} \times h_{w3})$$

$$h_3 = \frac{(480{,}587 \times 1{,}153.8) + (46{,}133 \times 189.1)}{526{,}720}$$

$$h_3 = 1{,}069.3 \text{ Btu/lbm}$$

This value agrees within 0.1 Btu/lbm with the assumed enthalpy in the extraction line at heater [h_{ext2} in para. 9.5.1.1.2(h)]. If agreement had not resulted, a new h_{ext2} would have been assumed with successive iterations until agreement was reached.

(k) Calculation of Enthalpy and Specific Volume Leaving No. 2 Heater Extraction Stage [Point (2)]

$$w_1 \times h_1 = (w_3 \times h_3) + (w_2 \times h_2) \text{ (energy balance)}$$

$$h_2 = \frac{(6{,}816{,}748 \times 1{,}111.9) - (525{,}720 \times 1{,}069.3)}{6{,}290{,}028}$$

$$= 1{,}115.5 \text{ Btu/lbm}$$

This enthalpy agrees with the enthalpy from the steam tables using p_2 and M_2.

Specific volume, v = 21.8692 cu ft/lbm at 17.49 psia 1,115.5 Btu/lbm from steam tables.

(l) Check assumed turbine steam path pressure at the No. 2 heater extraction stage [see para. 9.5.1.1.2(h)] by applying the test steam path pressure/flow relationship for No. 2 heater extraction stage to the specified cycle steam path flow leaving the No. 2 heater extraction stage calculated in para. 9.5.1.1.2(i).

$$\frac{w/\sqrt{p/v}}{\sqrt{1 - M}} = K$$

where

K = 7,154,879.5 (constant), see para. 9.4.7.3
$w = w_2$ = 6,290,028 lbm/hr, see para. 9.5.1.1.2(i)
v = 21.8692 cu ft/lbm, see para. 9.5.1.1.2(k)
M = 0.0397, see para. 9.5.1.1.2(j)
p = stage pressure, psia

$$\frac{6{,}290{,}028/\sqrt{p/21.8692}}{\sqrt{1 - 0.0397}} = 7{,}154{,}879.5$$

$$p = 17.60 \text{ psia}$$

This value checks the assumed pressure. If the assumed pressure was not correct within 1% or 1 psi (whichever is smaller), iterations using a new assumed pressure must be made for No. 2 heater extraction stage entering conditions [see para. 9.5.1.1.2(h)] with subsequent repeat calculations until agreement is reached.

(m) Calculation of Expansion Line Conditions From No. 2 Heater Extraction Stage. Leaving conditions to No. 1 heater extraction stage entering conditions are as follows:

	Steam Path Points	
	No. 2 Heater Stage	No. 1 Heater Stage
Pressure, psia	17.49	3.55 (assumed)
Enthalpy, Btu/lbm	1,115.5 (h_i)	h_1
Entropy, Btu/lbm°R	1.68653	. . .
Moisture	0.0397	. . .

Turbine section efficiency – dry basis = 90.32% [see paras. 9.4.7.2 and 9.4.7.2(j)]

No. 1 heater extraction stage pressure must be assumed due to the change in the extraction flow while maintaining the test turbine pressure/flow relationship. This assumption will be checked in para. 9.5.1.1.2(q).

$$\text{Efficiency} = \frac{h_i - h_1}{h_i - h_s}$$

where h_s = 1,012.3 Btu/lbm at 3.55 psia and s = 1.68653 Btu/lbm°R from steam tables

$$0.9032 = \frac{1{,}115.5 - h_1}{1{,}115.5 - 1{,}012.3}$$

$$h_1 = 1{,}022.3 \text{ Btu/lbm (dry basis)}$$

This value gives extraction point entering moisture M_1 = 0.1021 at 3.55 psia and 1,022.3 Btu/lbm from steam tables.

$$\frac{(M_2 + M_1)}{2}$$

where

M_2 = No. 2 heater stage leaving moisture [para. 9.5.1.1.2(j)]

$$\text{Turbine section average moisture} = \frac{(0.0397 + 0.1021)}{2}$$

$$= 0.0709$$

Correction factor to turbine section efficiency for average moisture

Copyright ASME International
Provided by IHS under license with ASME
No reproduction or networking permitted without license from IHS
Not for Resale

$$= 1.00 - 0.0709$$

$$= 0.9291$$

Corrected turbine section efficiency (wet basis)

$$= 90.32 \times 0.9291$$

$$= 83.92\%$$

First iteration to recalculate extraction point entering enthalpy, using corrected turbine section efficiency (wet basis)

$$0.8392 = \frac{1{,}115.5 - h_1}{1{,}115.5 - 1{,}012.3}$$

$$h_1 = 1{,}028.9 \text{ Btu/lbm}$$

This value gives extraction point entering moisture $M_1 = 0.0955$ at 3.55 psia and 1,028.9 Btu/lbm from steam tables.

Successive iterations using M_1 were made until resulting moisture differences were less than 0.0001, which resulted in

$$h_1 = 1{,}028.6 \text{ Btu/lbm}$$

$$M_1 = 0.0958$$

(n) Calculation of No. 1 Heater Extraction Flow (See Fig. 9.9)

(1) Specified Conditions

Pressure drop from turbine steam path to heater shell = 5%
Heater terminal temperature difference = 5°F
Drain cooler temperature difference = 10°F

(2) Assumptions (Checked Later)

Turbine steam path pressure = 3.55 psia [assumed first in para. 9.5.1.1.2(m)]
h_{ext1} = 737.5 Btu/lbm
t_{ci1} = 87.5°F (used same as test for this example; could be revised based on specified cycle heat input to condensate outlet from condenser at saturation temperature corresponding to test back pressure)
h_{ci1} = 56.7 Btu/lbm

(3) Determine t_{co1} = 141.1°F (and h_{co1} = 110.5 Btu/lbm) from the specified terminal temperature difference applied to the heater saturation temperature as a function of heater shell pressure (3.37 psia), which was calculated from turbine steam path pressure (3.55 psia) as initially assumed in para. 9.5.1.1.2(m), minus the specified pressure drop to heater. Determine t_{d1} = 97.5°F (and h_{d1} = 65.6 Btu/lbm) from the specified drain cooler temperature difference applied to the No. 1 heater water inlet temperature.

(4) Calculate No. 1 Heater Extraction Flow

$$w_{ext1} = \frac{w_{co1}\,(h_{co1} - h_{ci1}) - w_{ss}\,(h_{ss} - h_{d1})}{h_{ext1} - h_{d1}}$$

where

$w_{co1} = w_{co2} = 6{,}458{,}324$ lbm/hr
$w_{ss} = 3{,}661$ lbm/hr (from test)
$h_{ss} = 1{,}218.7$ Btu/lbm (from test)

$$w_{ext1} = \frac{6{,}458{,}324\,(110.5 - 56.7) - 3{,}661\,(1{,}218.7 - 65.6)}{737.5 - 65.6}$$

$$= 510{,}844 \text{ lbm/hr}$$

(o) Calculation of Steam Conditions at No. 1 Heater Extraction Stage (See Fig. 9.15)

(1) Known

Pressure = 3.55 psia [assumed in para. 9.5.1.1.2(m)]
w_1 = 6,290,028 lbm/hr [w_2 from (9.5.1.1.2(j)]
M_1 = 0.0958, see para. 9.5.1.1.2(m)
$w_3 = w_{ext1}$ = 510,844 lbm/hr, see para. 9.5.1.1.2(n)
E_1 = 26.67% [from test cycle, para. 9.4.7.2.1(i)]
h_{s3} = 1,125.3 Btu/lbm (saturated steam at 3.55 psia)
h_{w3} = 116.1 Btu/lbm (saturated water at 3.55 psia)

(2) Calculation of Moisture Leaving No. 1 Heater Extraction Stage [Point (2)]

$$E_2 = \frac{M_1 - M_2}{M_1}$$

$$0.2667 = \frac{0.0958 - M_2}{0.0958}$$

$$M_2 = 0.0703$$

Copyright ASME International
Provided by IHS under license with ASME
No reproduction or networking permitted without license from IHS
Not for Resale

(3) Calculation of Flow Leaving No. 1 Heater Extraction Stage [Point (2)]

$$w_2 = w_1 - w_3 \text{ (mass balance)}$$
$$= 6{,}290{,}028 - 510{,}844$$
$$= 5{,}779{,}184 \text{ lbm/hr}$$

(4) Calculation of Enthalpy of No. 1 Heater Extraction

$$w_{w2} = w_2 \times M_2$$
$$= 5{,}779{,}184 \times 0.0703$$
$$= 406{,}277 \text{ lbm/hr (moisture)}$$
$$w_{w1} = w_1 \times M_1$$
$$= 6{,}290{,}028 \times 0.0958$$
$$= 602{,}585 \text{ lbm/hr (moisture)}$$

$$w_{w3} = w_{w1} - w_{w2}$$
$$= 602{,}585 - 406{,}277$$
$$= 196{,}308 \text{ lbm/hr (moisture)}$$

$$w_3 = w_{s3} + w_{w3} \text{(mass balance)}$$
$$510{,}844 = w_{s3} + 196{,}308$$
$$w_{s3} = 314{,}536 \text{ lbm/hr (steam)}$$

$$w_3 \times h_3 = (w_{s3} \times h_{s3}) + (w_{w3} \times h_{w3}) \text{ (heat balance)}$$

$$h_3 = \frac{(314{,}536 \times 1{,}125.3) + (196{,}308 \times 116.1)}{510{,}844}$$

$$h_3 = 737.5 \text{ Btu/lbm}$$

This value agrees within 0.2 Btu/lbm with the assumed enthalpy in the extraction line of the heater [h_{ext1} in para. 9.5.1.1.2(n)]. If agreement had not resulted, a new h_{ext1} would have been assumed with successive iterations until agreement was reached.

(p) Calculation of Enthalpy and Specific Volume Leaving No. 1 Heater Extraction Stage [Point (2)]

$$w_1 \times h_1 = (w_3 \times h_3) + (w_2 \times h_2) \text{ (energy balance)}$$

$$h_2 = \frac{(6{,}290{,}028 \times 1{,}028.6) - (510{,}844 \times 737.5)}{5{,}779{,}184}$$

$$h_2 = 1{,}054.4 \text{ Btu/lbm}$$

Specific volume, v = 94.2505 cu ft/lbm at 3.55 psia and 1,054.4 Btu/lbm from steam tables.

(q) Check assumed turbine steam path pressure at the No. 1 heater extraction stage [see para. 9.5.1.1.2(m)] by applying the test steam path pressure/flow relationship for No. 1 heater extraction stage to the specified cycle steam path flow leaving the No. 1 heater extraction stage calculated in para. 9.5.1.1.2(o).

$$\frac{w/\sqrt{p/v}}{\sqrt{1 - M_2}} = K$$

where

K = 30,884,393.6 (constant), see para. 9.4.7.3
$w = w_2$ = 5,779,184 lbm/hr, see para. 9.5.1.1.2(o)
v = 94.2505 cu ft/lbm, see para. 9.5.1.1.2(p)
M_2 = 0.0703, see para. 9.5.1.1.2(o)
p = stage pressure, psia

$$\frac{5{,}779{,}184/\sqrt{p/94.2505}}{\sqrt{1 - 0.0703}} = 30{,}884{,}393.6$$

$$p = 3.55 \text{ psia}$$

This value checks the assumed pressure. If the assumed pressure is not correct within 1% or 1 psi (whichever is smaller), iterations using a new assumed pressure must be made for No. 1 heater extraction stage entering conditions [see para. 9.5.1.1.2(m)] with subsequent repeat calculations until agreement is reached.

It should be noted that iterations may be required on higher pressure heaters after calculating the lower pressure heaters if the interfacing conditions between heaters change as a result of lower pressure heater calculations.

(r) Calculation of Expansion Line From No. 1 Heater Extraction Stage Leaving Conditions to ELEP at Test Low Pressure Turbine Exhaust Pressure of 1.17 in. Hg Absolute

	Steam Path Points	
	No. 1 Heater Stage	ELEP
Pressure, psia	3.54	0.575 (1.17 in. Hg absolute)
Enthalpy, Btu/lbm	1,054.4 (h_i)	h_0
Entropy, Btu/lbm°R	1.7557	. . .

Turbine section efficiency – dry basis = 90.32% [see para. 9.4.7.2 and para. 9.4.7.2.1(j)]

Copyright ASME International
Provided by IHS under license with ASME
No reproduction or networking permitted without license from IHS
Not for Resale

$$\text{Efficiency} = \frac{h_i - h_o}{h_i - h_s}$$

where
h_s = 951.7 Btu/lbm at 3.55 psia and s = 1.7557 Btu/lbm°R from steam tables

$$0.9032 = \frac{1{,}054.4 - h_o}{1{,}054.4 - 951.67}$$

$$h_o = 961.6 \text{ Btu/lbm (dry basis)}$$

This value gives low pressure turbine exhaust moisture M_1 = 0.1305 at 1.17 in. Hg absolute and 961.6 Btu/lbm from steam tables.

$$\frac{(M_2 + M_1)}{2}$$

where

M_2 = No. 1 heater stage leaving moisture, see para. 9.5.1.1.2(o)

$$\text{Turbine section average moisture} = \frac{(0.0703 + 0.1305)}{2}$$

$$= 0.1004$$

Correction factor to turbine section efficiency for average moisture

$$= 1.00 - 0.1004$$

$$= 0.8996$$

Corrected turbine section efficiency (wet basis)

$$= 90.32 \times 0.8996$$

$$= 81.25\%$$

First iteration to recalculate ELEP enthalpy, using corrected turbine section efficiency (wet basis)

$$0.8125 = \frac{1{,}054.4 - h_o}{1{,}054.4 - 951.67}$$

$$h_o = 970.9 \text{ Btu/lbm}$$

This value gives ELEP moisture of M_0 = 0.1216 at 1.17 in. Hg absolute and 970.9 Btu/lbm from steam tables.

Successive iterations using M_1 were made until resulting moisture differences were less than 0.0001, which resulted in:

$$M_0 = 0.1220$$

$$h_o = 970.53 \text{ Btu/lbm}$$

(s) Calculation of the Low Pressure Turbine End Point (TEP) Based on the ELEP and the Exhaust Loss

Expansion-line end point	970.53 Btu/lbm
Exhaust pressure	1.17 in. Hg abs
Moisture	0.1220
Specific volume, v = 562.47 (1.0 − 0.1220)	493.85 ft³/lbm
Annulus area per end, A	105.7 ft²
Annulus velocity per end $= \frac{1}{6}\frac{wv}{3600A} = \frac{1}{6} \times \frac{5{,}779{,}184 \times 493.85}{3600 \times 105.7}$	1,250.1 ft/sec
Dry exhaust loss (from manufacturer's curve)	41.0 Btu/lbm

Actual exhaust loss
= (Dry exhaust loss) (0.87) (1 − M) (1 − 0.65M)
= 41.0 × 0.87 × (1 − 0.1220) × (1 − 0.65 × 0.1220)
= 28.83 Btu/lbm

Low pressure turbine end point (TEP)
= 970.53 + 28.83
= 999.36 Btu/lbm

(t) Calculation of Generator Load by Heat Balance Around the Turbine-Generator. Refer to Table 9.3..

(u) Calculation of Test Heat Rate Corrected for Group 1 Corrections (Test Turbine Operating in the Specified Cycle)

$$\text{Heat rate} = \frac{w_1 h_1 - w_2 h_2}{\text{Generator Output}}$$

where

w_1 = total steam flow to turbine, lbm/hr
h_1 = enthalpy of steam supplied to turbine, Btu/lbm
w_2 = feedwater flow leaving No. 6 heater, lbm/hr
h_2 = enthalpy of feedwater leaving No. 6 heater, Btu/lbm

$$\text{Heat rate} = \frac{10{,}779{,}670 \times 1{,}255.1 - 10{,}780{,}670 \times 439.8}{919{,}744}$$

$$= 9{,}555.1 \text{ Btu/kWhr (10,081.2 kJ/kWh)}$$

9.5.1.1.3 Calculation of Test Cycle Correction Factor. The test cycle uncorrected heat rate was calculated in para. 9.10 of the sample calculation. The test heat rate was 9,544.9 Btu/kWhr (10,070.4 kJ/kWh) at an uncorrected load of 919,223 kW. Thus the cycle correction factor is the ratio of 9,555.1

Copyright ASME International
Provided by IHS under license with ASME
No reproduction or networking permitted without license from IHS
Not for Resale

TABLE 9.3
CALCULATION OF GENERATOR LOAD BY HEAT BALANCE AROUND THE TURBINE-GENERATOR

Parameter	Flow, lbm/hr	Enthalpy, Btu/lbm	Heat, Btu/hr
Heat In			
Main steam	10,779,670	1,255.1	13,529,563,817
Total heat in	...	...	13,529,563,817
Heat Out			
Control valve leakoff (high pressure)	1,580	1,255.1	1,983,058
Control valve leakoff (low pressure)	480	1,255.1	602,448
Extraction to No. 6 heater	636,084	1,220.4	776,276,914
High pressure shaft packing leakoff	1,834	1,139.4	2,089,660
Extraction to No. 5 heater	537,961	1,182.5	636,138,883
High pressure shaft packing leakoff	19,766	1,139.4	22,521,380
Extraction to No. 4 heater	763,716	1,097.8	838,407,425
High pressure shaft packing leakoff	19,862	1,139.4	22,630,763
Moisture separator drains to No. 4 heater	521,834	342.9	178,936,879
First stage reheater drains to No. 6 heater	430,708	443.0	190,803,644
Second stage reheater drains to No. 6 heater	388,560	525.8	204,304,848
Extraction to No. 3 heater	515,183	1,197.9	617,137,716
Steam to feedwater pump turbine	125,354	1,197.9	150,161,557
Extraction to No. 2 heater	526,720	1,069.3	563,221,696
Extraction to No. 1 heater	510,844	737.5	376,747,450
Exhaust steam to condenser	5,779,184	999.36	5,775,485,322
Total Heat Out	...	...	10,357,449,460

GENERAL NOTES:

Net heat = heat in − heat out = 13,529,563,817 − 10,357,449,460 = 3,172,114,357 Btu/hr

$$\text{Input to generator} = \frac{3{,}172{,}114{,}357}{3{,}412.14} = 929{,}655 \text{ kW}$$

Minus generator electrical losses	−7,100 kW
Minus generator mechanical losses	−2,811 kW
Generator output	919,744 kW

at 0.99 power factor and minimum H_2 pressure.

to 9,544.9, or 1.0010. This number represents the magnitude of the effect of the test cycle as corrected on heat rate.

9.5.2 Group 2 Corrections. Group 2 corrections, described in para. 5.8.3 of the Code and outlined in paras. 5.12.1, 5.12.2, and 5.12.3, cover the effect of deviations from specified initial steam conditions and absolute exhaust pressure and are determined from correction curves supplied by the turbine manufacturer (see Figs. 9.6 through 9.9 and Table 9.4).

The throttle steam flow to the turbine was corrected to the specified pressure and temperature as specified in para. 5.4.2 of the Code.

$$w_s = w_t \sqrt{\frac{p_s \times v_t}{p_t \times v_s}}$$

where

w_s = throttle steam flow corrected to specified pressure and temperature, lbm/hr
w_t = test throttle steam flow, lbm/hr
p_s = specified throttle pressure, psia
p_t = test throttle pressure, psia
v_t = test throttle specific volume, cu ft/lbm
v_s = specified throttle specific volume, cu ft/lbm

Copyright ASME International
Provided by IHS under license with ASME
No reproduction or networking permitted without license from IHS
Not for Resale

TABLE 9.4
GROUP 2 CORRECTION FACTORS (USING MANUFACTURER'S CORRECTION CURVES)

		Heat Rate		Load	
	Change	Percent Change	Correction Divisor	Percent Change	Correction Divisor
Throttle pressure (Fig. 9.20)					
Measured 907.1 psia	+7.1	−0.05	0.9995	+0.11	1.0011
Specified 900.0 psia	0.79%				
Throttle temperature (Fig. 9.21)					
Measured 594.3°F	+19.3	−0.40	0.9960	+0.58	1.0058
Specified 575.0°F					
Exhaust pressure (Fig. 9.22)					
Measured 1.17 in. Hga	+0.17	+0.08	1.0008	−0.08	0.9992
Specified 1.00 in. Hga					
Combined divisor			0.9963		1.0061

$$w_s = 10{,}779{,}670 \sqrt{\frac{900.0 \times 0.5748}{907.1 \times 0.5458}}$$

$$= 10{,}779{,}670(1.022)$$

$$= 11{,}016{,}823 \text{ lbm/hr } (4{,}998{,}582 \text{ kg/h})$$

The factors listed in the table permit correcting the test heat rate and load to specified conditions. Correction factors are defined as 1 + (% change)/100. These factors will be used as divisors when correcting from test to specified for Group 2 corrections.

9.5.3 Calculation of Corrected Heat Rate and Load

$$\text{Corrected heat rate} = \frac{9{,}555.1}{0.9963}$$

$$= 9{,}591 \text{ Btu/kWhr}$$

$$\text{Corrected load} = \frac{919{,}744}{1.0061}$$

$$= 914{,}168 \text{ kW}$$

According to para. 3.13.2 of the Code, test results may be compared with the specified performance by reading the difference between two locus curves, one drawn through the specified performance points and the other through the test points. The difference is determined at the specified load point.

The specified heat rate curve is shown on Fig. 9.1. At the specified load point of 899,910 kW, the specified heat rate is found from this figure to be 9,610 Btu/kWhr. Also shown is the corrected test heat rate of 9,591 Btu/kWhr at the corrected load of 914,168 kW as determined from the preceding calculations. Because this is the only test point available, a curve is drawn through the test point parallel to the specified curve from which a heat rate of 9,596 Btu/kWhr is read for the specified load. For this example, the turbine was 15 Btu/kWhr better than expected at 899,910 kW.

$$\text{percent change} = \frac{(9{,}596 - 9{,}610)}{9{,}610} \times 100$$

$$= -0.15\%$$

The corrected test performance is 0.15% better than the specified turbine performance.

Copyright ASME International
Provided by IHS under license with ASME
No reproduction or networking permitted without license from IHS
Not for Resale

SECTION 10 — SAMPLE CALCULATION FOR A TEST OF AN AUTOMATIC EXTRACTION NONCONDENSING TURBINE

10.1 DESCRIPTION OF UNIT

The unit tested is a 3600 rpm, 40,000 kW noncondensing turbine with provision for automatic extraction at 160 psig. Exhaust steam at 20 psig is fed into a process steam line for industrial use. Specified throttle steam conditions are 1,250 psig, 900°F. Expected performance is shown in Fig. 10.1. The generator is rated at 51,200 kVA with an 0.85 power factor and 30 psig hydrogen pressure. The turbine is equipped with seven steam leakoffs that direct high pressure leakoff steam to lower pressure stages and low pressure leakage steam to a spray chamber. Refer to Fig. 10.2 for the leakoff arrangement.

10.2 DESCRIPTION OF TEST INSTRUMENTATION

Location of test instrumentation is shown in Fig. 10.3. Throttle and automatic extraction pressures are measured with absolute pressure transducers. Throttle steam temperature is measured using calibrated thermocouples. The turbine exhaust pressure is measured with absolute pressure transducers. Steam flow to the turbine throttle and the automatic extraction flow, downstream of the throttle valve steam leakoff re-entry, are measured using calibrated test throat-tap nozzle flow sections. Generator output is determined by the three-wattmeter method. Leakoff flows for calculating the exhaust flow, required for entry into the turbine back pressure correction curve, are established from design data. (Refer to Fig. 10.2.) The station hydrogen pressure gage is used to establish the hydrogen pressure correction. Pre- and post-test uncertainty analysis procedures and details are reviewed by all the parties of the test. The automatic extraction flow is a significant percentage of the throttle flow. Paragraph 4.16.1 of the Code states that the requirements of paras. 4.8.4 to 4.12.6 must be satisfied to achieve the extraction flow measurement accuracy required to reduce the extraction flow uncertainty effect on the overall power. The referenced paragraphs require a throat-tap nozzle measuring water flow, not steam flow; therefore, this test cannot be considered a Code test. This example is included in this Appendix to demonstrate the calculation method.

10.3 SUMMARY OF TEST DATA

All readings are corrected for instrument calibration and water legs where applicable.

Throttle steam pressure	1,270.4 psia
Throttle steam temperature	896.8°F
Throttle steam flow	636,212 lbm/hr
Extraction pressure	175.8 psia
Extraction steam flow	395,562 lbm/hr
Exhaust pressure	34.16 psia
Generator output	39,133 kW
Generator hydrogen pressure	28.5 psig
Generator power factor	0.91
Barometric pressure	14.7 psi

10.4 CALCULATION OF TURBINE PERFORMANCE

10.4.1 The test generator output is corrected for deviations from the specified values of power factor and hydrogen pressure using the generator loss curve, Fig. 10.4.

Variable	kW
Measured generator output	39,133
Losses for 0.91 power factor rather than the specified 0.85	770
Correction for the test hydrogen pressure being 28.5 psig rather than the specified 30 psig	−4
Total generator losses, test conditions	766
Losses with specified power factor and hydrogen pressure	800
Generator output corrected to specified power factor and hydrogen pressure 39,133 + (766 − 800)	39,099

Copyright ASME International
Provided by IHS under license with ASME
No reproduction or networking permitted without license from IHS
Not for Resale

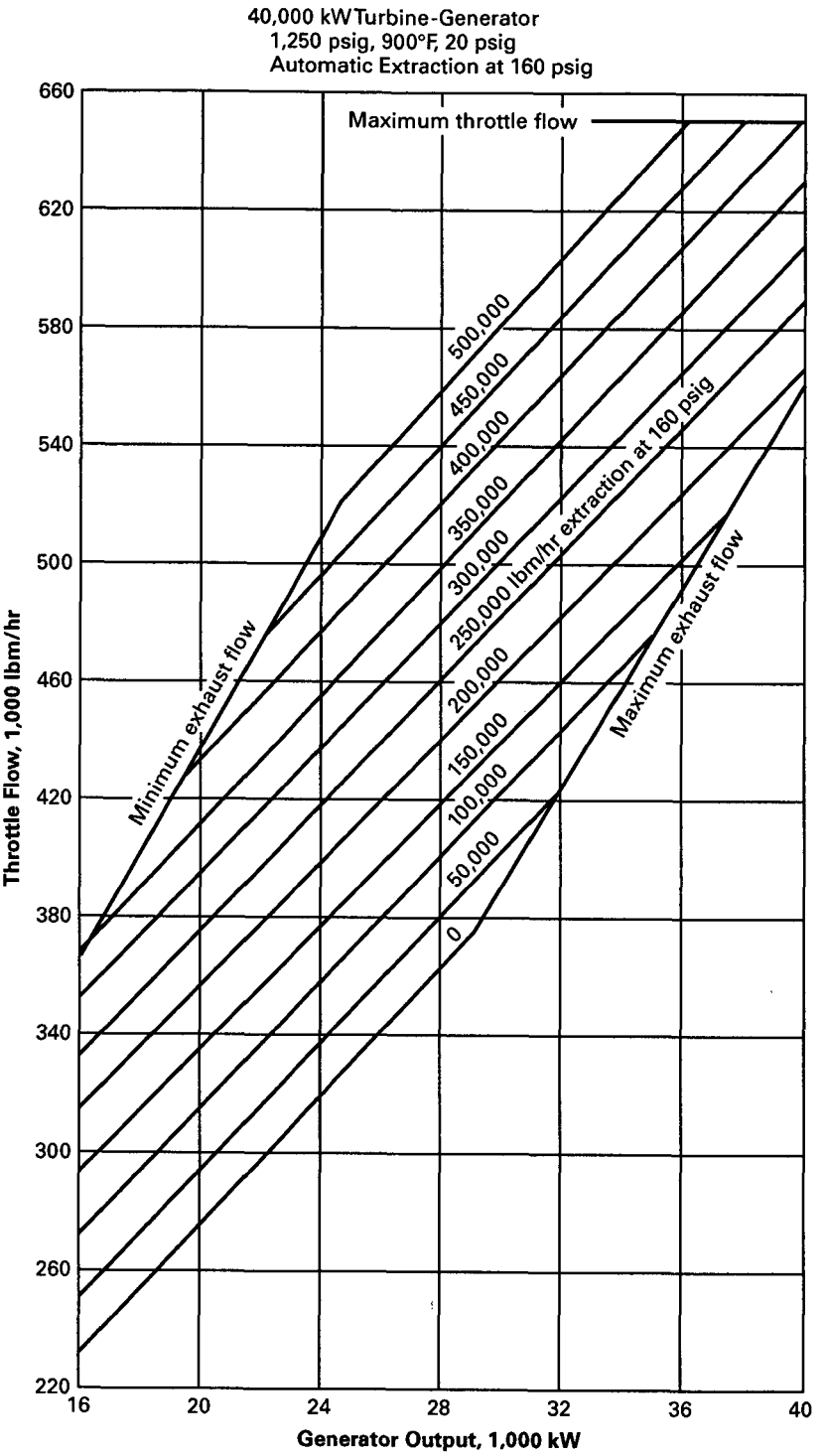

FIG. 10.1 EXPECTED PERFORMANCE

Copyright ASME International
Provided by IHS under license with ASME
No reproduction or networking permitted without license from IHS
Not for Resale

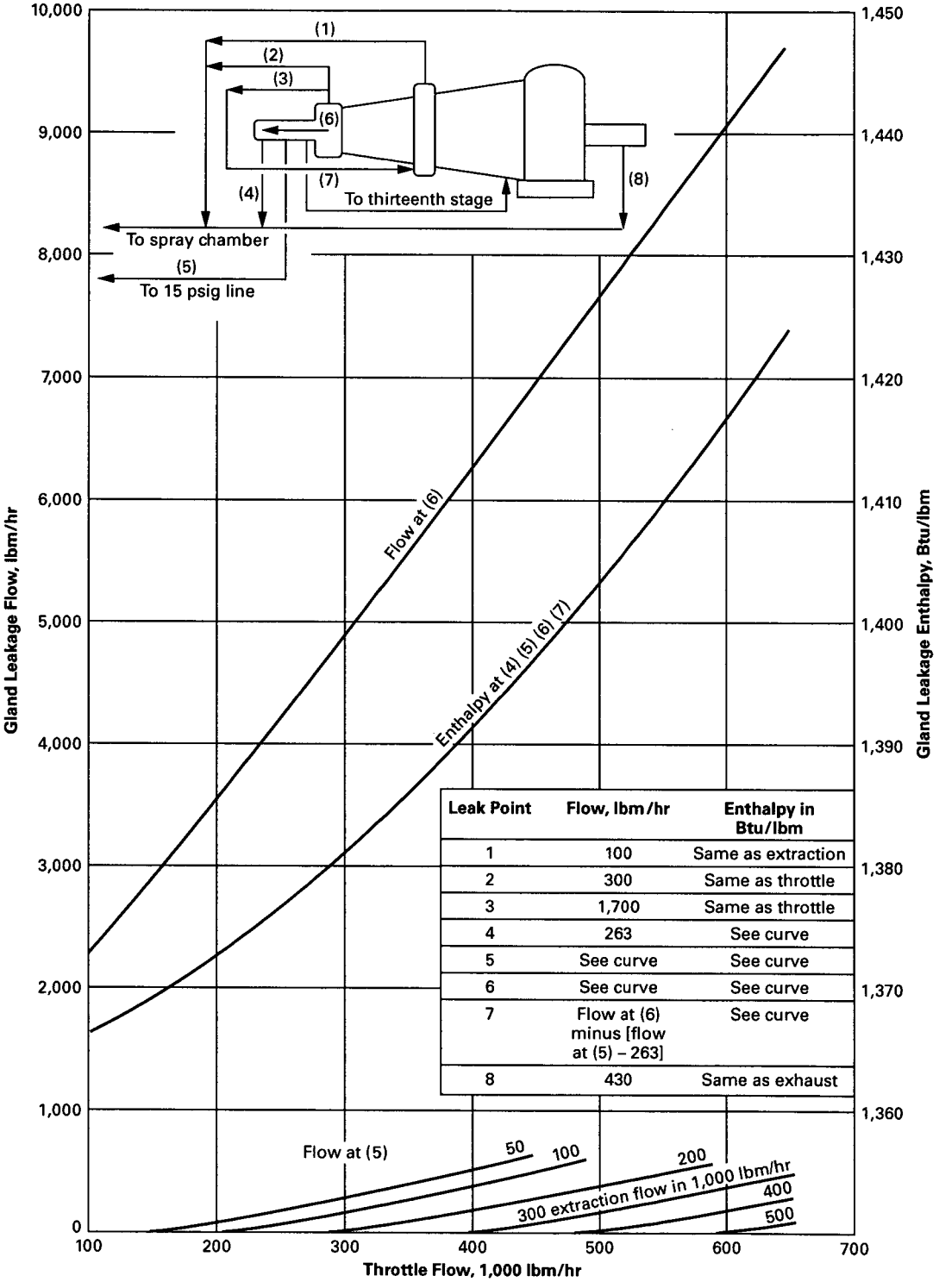

Leak Point	Flow, lbm/hr	Enthalpy in Btu/lbm
1	100	Same as extraction
2	300	Same as throttle
3	1,700	Same as throttle
4	263	See curve
5	See curve	See curve
6	See curve	See curve
7	Flow at (6) minus [flow at (5) – 263]	See curve
8	430	Same as exhaust

FIG. 10.2 LEAKOFF FLOWS

Copyright ASME International
Provided by IHS under license with ASME
No reproduction or networking permitted without license from IHS
Not for Resale

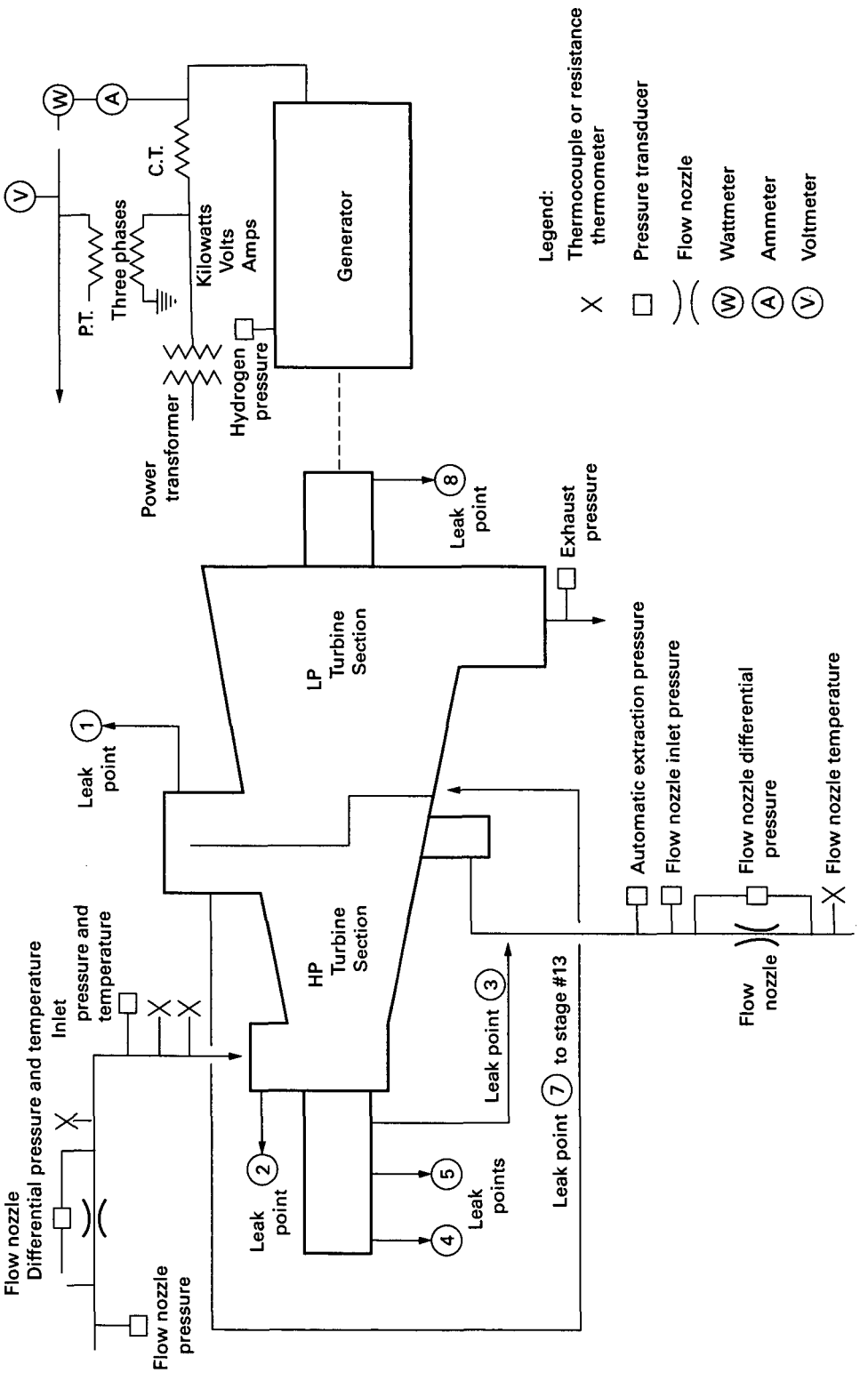

FIG. 10.3 FLOW AND INSTRUMENTATION DIAGRAM: AUTOMATIC EXTRACTION NONCONDENSING TURBINE

Copyright ASME International
Provided by IHS under license with ASME
No reproduction or networking permitted without license from IHS
Not for Resale

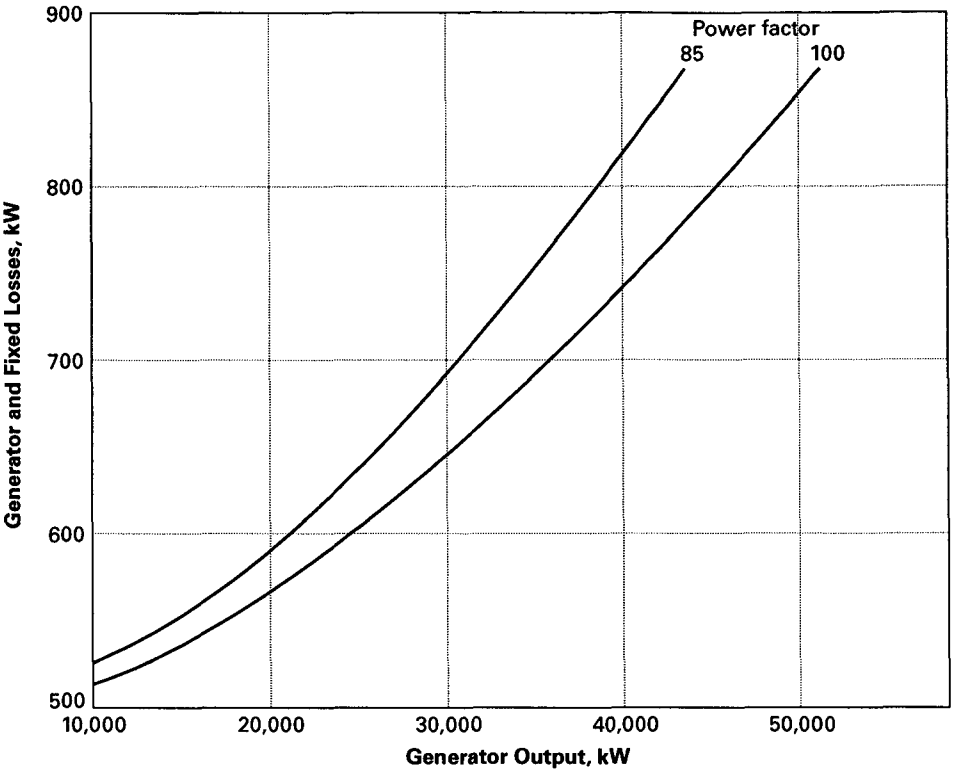

GENERAL NOTE: Curves are for 30 psig hydrogen pressure. For other hydrogen pressures, correct curve at rate of 2.44 kW/psi.

FIG. 10.4 GENERATOR LOSSES

10.4.2 The turbine exhaust flow is determined for entry into the exhaust pressure correction curve. A flow balance around the turbine is made using design values from Fig. 10.2 for the leakoff flows leaving the turbine.

Variable	Rate, lbm/hr
Flow to turbine throttle	636,212
High pressure valve stem leakoff flow to the spray chamber (leak point 2)	300
Extraction valve stem leakoff flow to the spray chamber (leak point 1)	100
High pressure end packing leakoff flow to the spray chamber (leak point 4)	263
High pressure end packing leakoff to the 15 psig steam line (leak point 5)	250
Automatic extraction flow	395,562
Flow to turbine exhaust	

$$636{,}212 - (300 + 100 + 263 + 250 + 395{,}562) = 239{,}737 \text{ lbm/hr}$$

10.4.3 Corrections for the test steam conditions deviating from the specified conditions are made on a ΔkW basis using the correction given in Fig. 10.5. To correct from the test steam conditions to the specified steam conditions, the signs for the ΔkW as read from the curves in Fig. 10.5 are reversed.

Variable	Test	Correction, ΔkW
Throttle pressure	1,255.7 psig	−45
Throttle temperature	896.8°F	+110
Automatic extraction pressure	161.1 psig	+55
Exhaust pressure	19.46 psig	−60

10.4.4 The generator output, corrected to specified steam and generator conditions, with 636,212 lbm/hr throttle flow and 395,562 lbm/hr extraction flow becomes

$$39{,}099 \text{ kW} + (-45 + 110 + 55 - 60) = 39{,}159 \text{ kW}$$

Copyright ASME International
Provided by IHS under license with ASME
No reproduction or networking permitted without license from IHS
Not for Resale

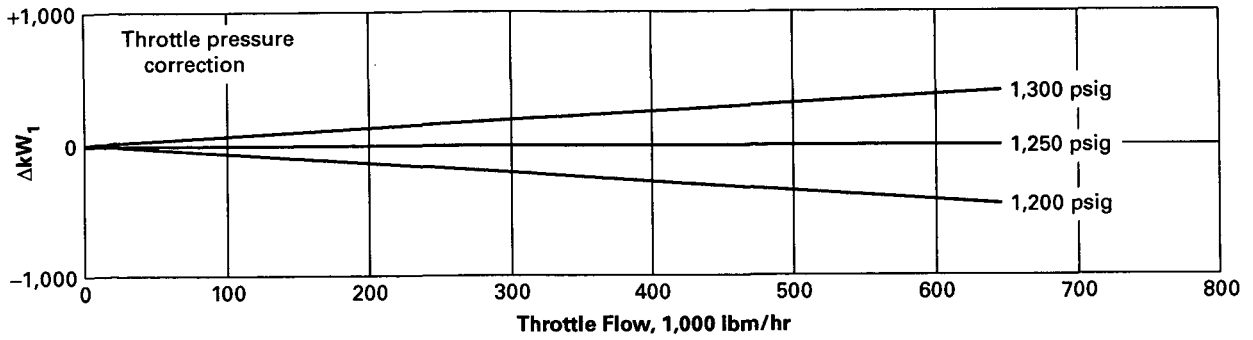

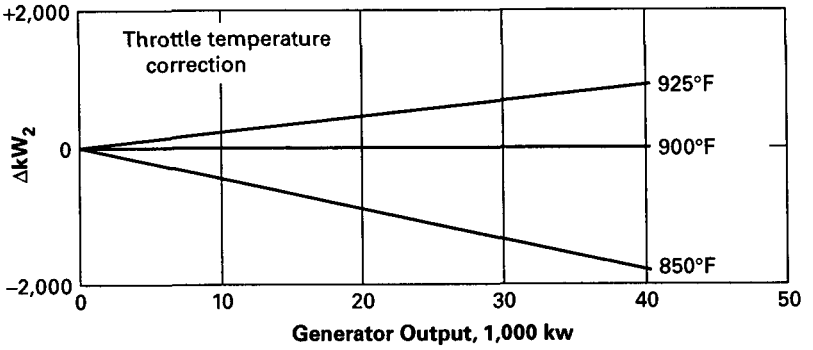

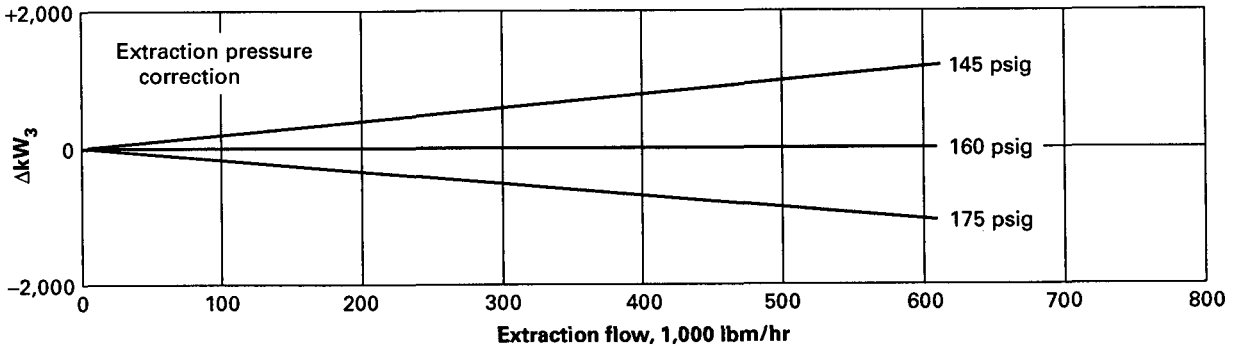

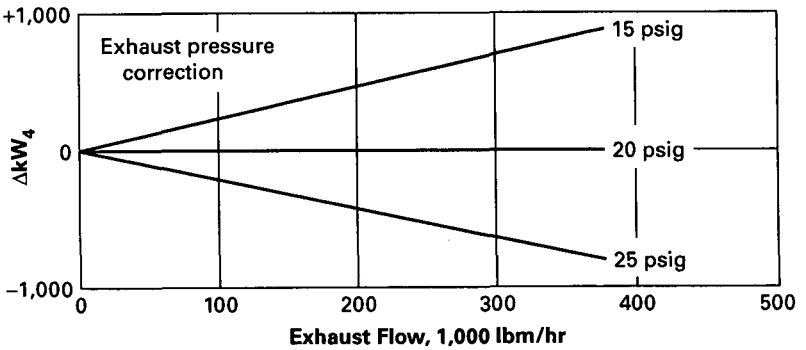

FIG. 10.5 STEAM CONDITIONS CORRECTION FACTORS

Copyright ASME International
Provided by IHS under license with ASME
No reproduction or networking permitted without license from IHS
Not for Resale

10.4.5 The corrected output is next compared to the expected output on Fig. 10.1 at the same throttle and extraction flows. Figure 10.1 shows an output of 39,000 kW with 636,212 lbm/hr flow to throttle and 395,562 lbm/hr extraction flow. The corrected test performance is, therefore, 0.4% better than expected.

$$\frac{(39{,}159 - 39{,}000)}{39{,}000} \times 100 = 0.4\%$$

Copyright ASME International
Provided by IHS under license with ASME
No reproduction or networking permitted without license from IHS
Not for Resale

SECTION 11 — SAMPLE CALCULATION FOR A TEST OF AN AUTOMATIC EXTRACTION CONDENSING TURBINE

11.1 DESCRIPTION OF UNIT

The unit tested is a single case 3600 rpm, 56,100 kW condensing steam turbine with provisions for automatic extraction at 170 psig. The generator is rated at 66,000 kVA, with 0.85 power factor. Steam is provided by three coal-fired boilers. Specified steam conditions at the turbine throttle are 1,500 psig, 950°F. Extraction steam at 170 psig is used to generate high pressure, high-temperature water for a district heating system. Condensate from these hot water generators is returned to the condenser hotwell. The specified exhaust pressure is 2.5 in. Hg absolute. An evacuator prevents steam from blowing out of the shaft end seals to atmosphere, and a gland seal condenser recovers the heat from this steam. The condensed gland seal steam is directed to the condenser hotwell and is included in the condensate nozzle flow. Steam from inner pressure gland seals and lower valve stem leakoffs is directed to lower stages of the turbine. Upper valve stem leakoffs vent to atmosphere. Expected performance at the rated operating conditions is on a locus-of-valve-points basis as shown in Fig. 11.1.

11.2 DESCRIPTION OF TEST INSTRUMENTATION

Location of test instrumentation is shown in Fig. 11.2. Throttle steam pressure, automatic extraction pressure, and exhaust pressure are measured using calibrated absolute pressure transducers. The exhaust pressure transducer is connected to six basket tip sensors located at the turbine exhaust flange. The throttle steam temperature is measured using calibrated thermocouples. Generator output is determined by one $2^1/_2$ element polyphase wattmeter. Steam flow to the turbine is established by measuring the condensate flow from the condenser using a throat-tap flow nozzle. Some may prefer to use an orifice run to measure condensate flow for this application, even though this practice does not conform to the provisions of para. 4.8 in PTC 6. The use of this device, based on the values in Group 1A in Table 4.10 of PTC 6R, increases the uncertainty of the test results. The measured flow is adjusted for the amount of gland leakage from the hotwell pump, storage change in the condenser hotwell, and steam leakage from governor valve stems. Manufacturer's calculated values of valve stem leakage flow vented to atmosphere are used in determining the exhaust flow. The condenser is checked for leakage and found to be tight.

Automatic extraction steam flow is measured using a calibrated test throat-tap nozzle flow section or orifice run. The automatic extraction flow is a significant percentage of the throttle flow. Paragraph 4.16.1 of the Code states the requirements of paras. 4.8.4 to 4.12.6 must be satisfied to achieve the extraction flow measurement accuracy required to reduce the extraction flow uncertainty effect on the overall power. This example is included in this Appendix to demonstrate the calculation method.

11.3 SUMMARY OF TEST DATA

All readings are corrected for instrument calibration and water legs, where applicable.

Throttle steam pressure	1,451.4	psia
Throttle steam temperature	953.3°F	
Condensate flow	527,725	lbm/hr
Automatic extraction pressure	183.2	psia
Extraction steam flow	256,740	lbm/hr
Exhaust pressure	1.24	psia
Generator output	52,618	kW
Generator power factor	0.87	
Decrease in condenser hotwell storage	162	lbm/hr
Condensate pump gland leakage	32	lbm/hr
Barometric pressure	30.53	in. Hg

11.4 CALCULATION OF TURBINE PERFORMANCE

11.4.1 The corrected turbine inlet flow is established from the condensate nozzle flow with compensation for losses or gains between the point of measurement and the turbine throttle.

Copyright ASME International
Provided by IHS under license with ASME
No reproduction or networking permitted without license from IHS
Not for Resale

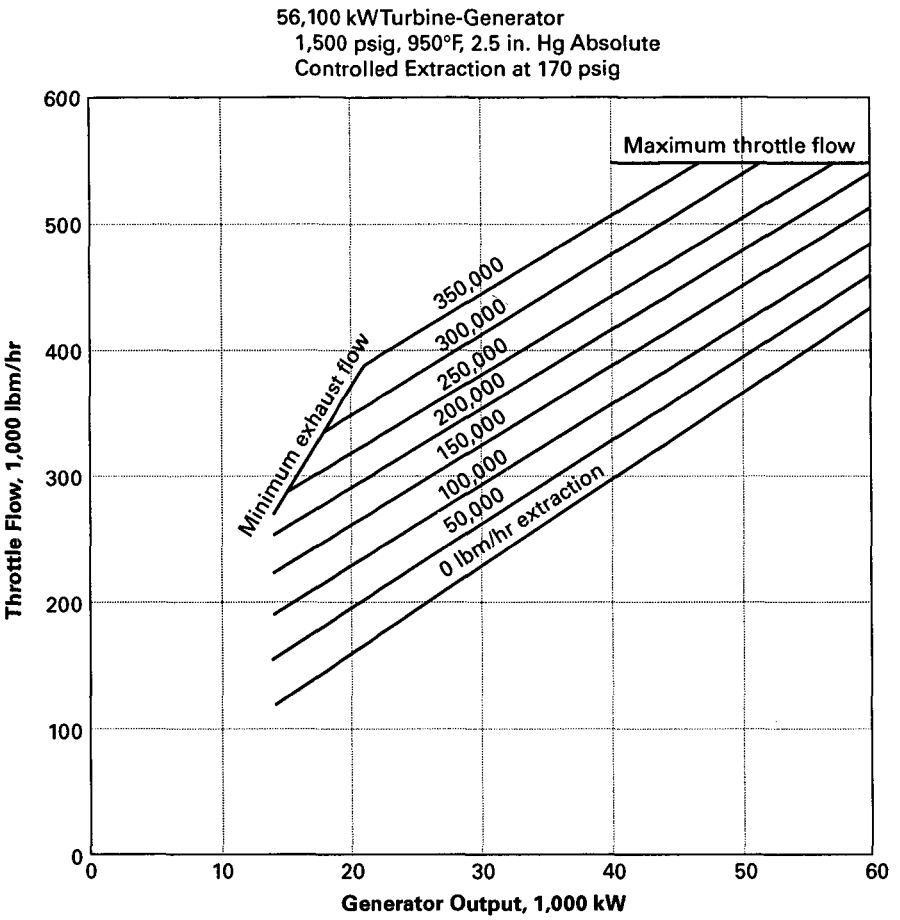

FIG. 11.1 EXPECTED PERFORMANCE

Variable	Rate, lbm/hr
Flow measured by flow nozzle	527,725
Change in hotwell storage	−162
Condensate pump gland leakage	+32
High pressure valve stem leakoff flow	+68
Extraction valve stem leakoff flow	+48
Corrected turbine inlet flow	527,711

11.4.2 The test generator output is corrected for deviations from the specified value of power factor using the generator loss curve, Fig. 11.3, supplied with the turbine performance data.

Variable	Rate, kW
Measured generator output	52,618
Losses for 0.87 power factor	1,165
Losses with specified 0.85 power factor	1,185
Generator output corrected to specified conditions: 52,618 + (1,165 − 1,185) = 52,598 kW	

11.4.3 The turbine exhaust flow is required to determine the exhaust pressure correction factor from the curve, Fig. 11.4. To determine this flow, a flow balance around the turbine is made using manufacturer's values for leakoff flow rates leaving the turbine. See Fig. 11.2 for location of leakoffs.

Variable	Rate, lbm/hr
Steam flow to turbine throttle	527,711
High pressure valve stem leak-off flow to roof	68
Extraction valve stem leakage flow to roof	48
High pressure gland leakage to gland seal condenser	240
Low pressure gland leakage to gland seal condenser	220
Automatic extraction flow	256,740
Flow to turbine exhaust 527,711 − (68 + 48 + 240 + 220 + 256,740) =	270,395

Copyright ASME International
Provided by IHS under license with ASME
No reproduction or networking permitted without license from IHS
Not for Resale

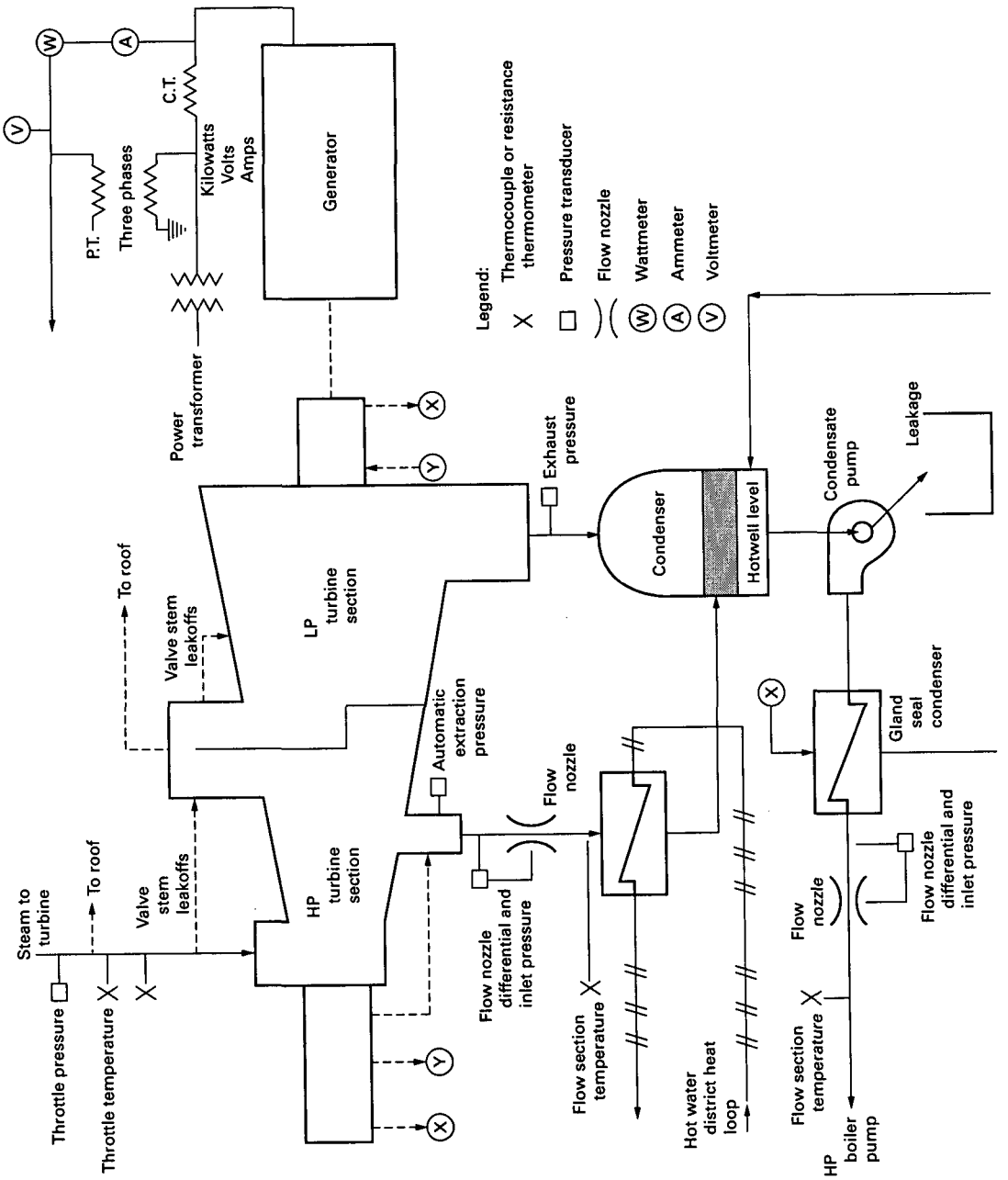

FIG. 11.2 FLOW AND INSTRUMENTATION DIAGRAM

Copyright ASME International
Provided by IHS under license with ASME
No reproduction or networking permitted without license from IHS
Not for Resale

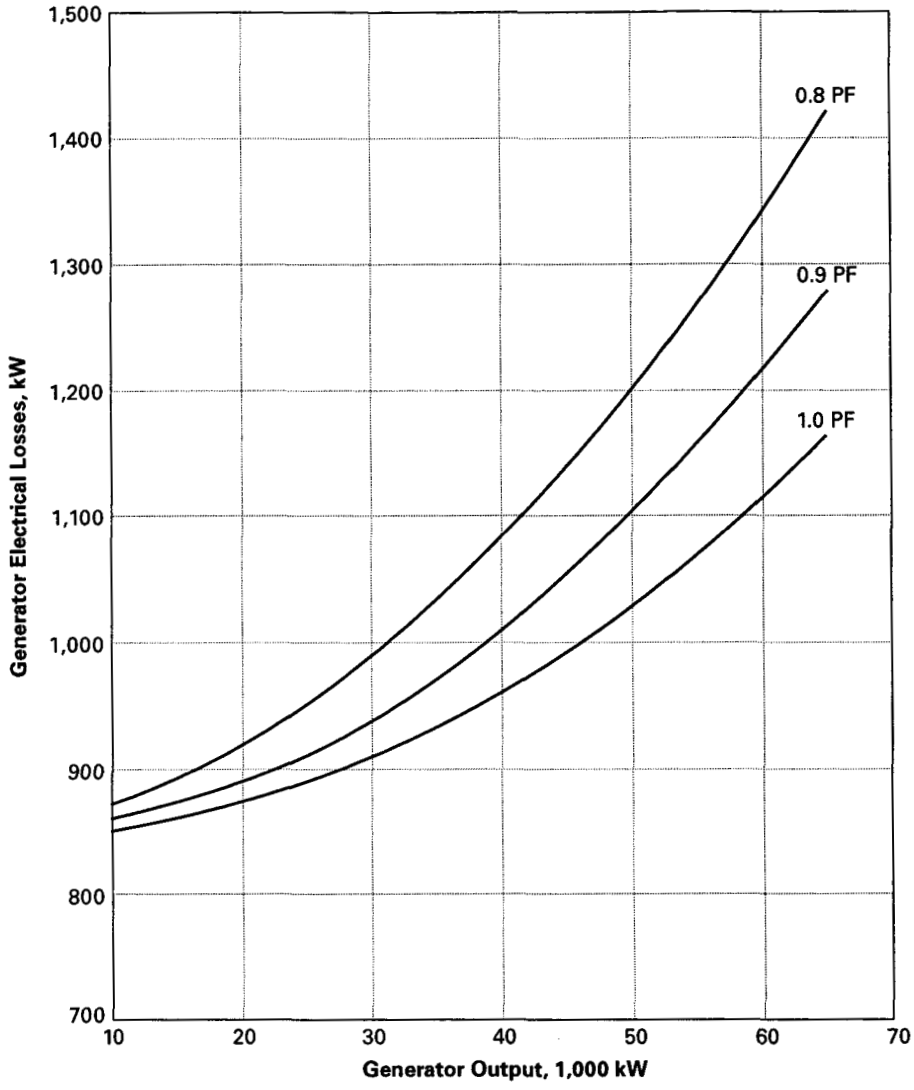

FIG. 11.3 GENERATOR ELECTRICAL LOSSES

11.4.4 Corrections for the test steam conditions deviating from the specified steam conditions are made on a ΔkW basis using the correction curves given in Figs. 11.4 through 11.7. To correct from the test steam conditions to the specified steam conditions, the signs for the ΔkW as read from Figs. 11.4 through 11.7 must reverse.

Variable	Correction Test	ΔkW
Throttle pressure	1,436.7 psig	+115
Throttle temperature	953.3°F	−125
Automatic extraction pressure	168.5 psig	−42
Exhaust pressure	2.52 in. HgA	+80

The generator output corrected to specific steam and generator conditions and with 527,711 lbm/hr throttle flow and 256,740 lbm/hr extraction flow becomes

$$52{,}598 + (115 - 125 - 42 + 80) = 52{,}626 \text{ kW}$$

11.4.5 The corrected output is next compared to the expected output on Fig. 11.1 at the test throttle and extraction flows. Fig. 11.1 shows an output of 52,500 kW with 527,711 lbm/hr to throttle and 256,740 lbm/hr extraction flow. The corrected test performance is therefore 0.24% better than expected.

$$\frac{52{,}626 - 52{,}500}{52{,}500} \times 100 = 0.24\%$$

Copyright ASME International
Provided by IHS under license with ASME
No reproduction or networking permitted without license from IHS
Not for Resale

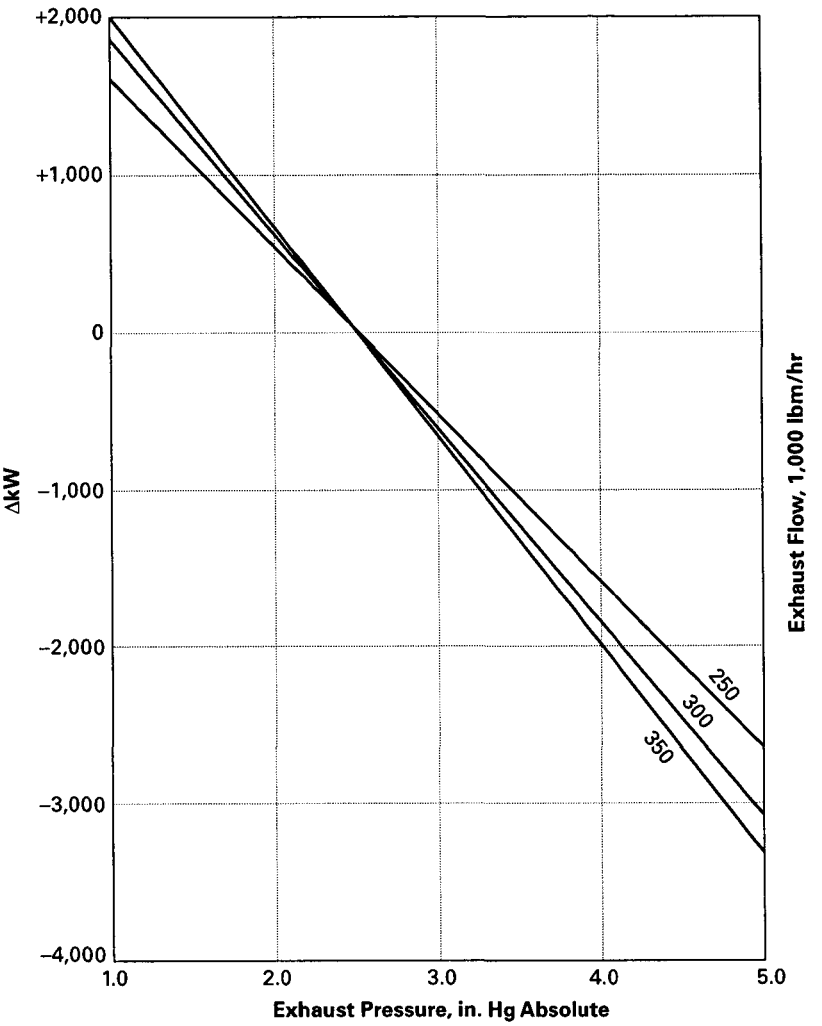

FIG. 11.4 EXHAUST PRESSURE CORRECTION

Copyright ASME International
Provided by IHS under license with ASME
No reproduction or networking permitted without license from IHS
Not for Resale

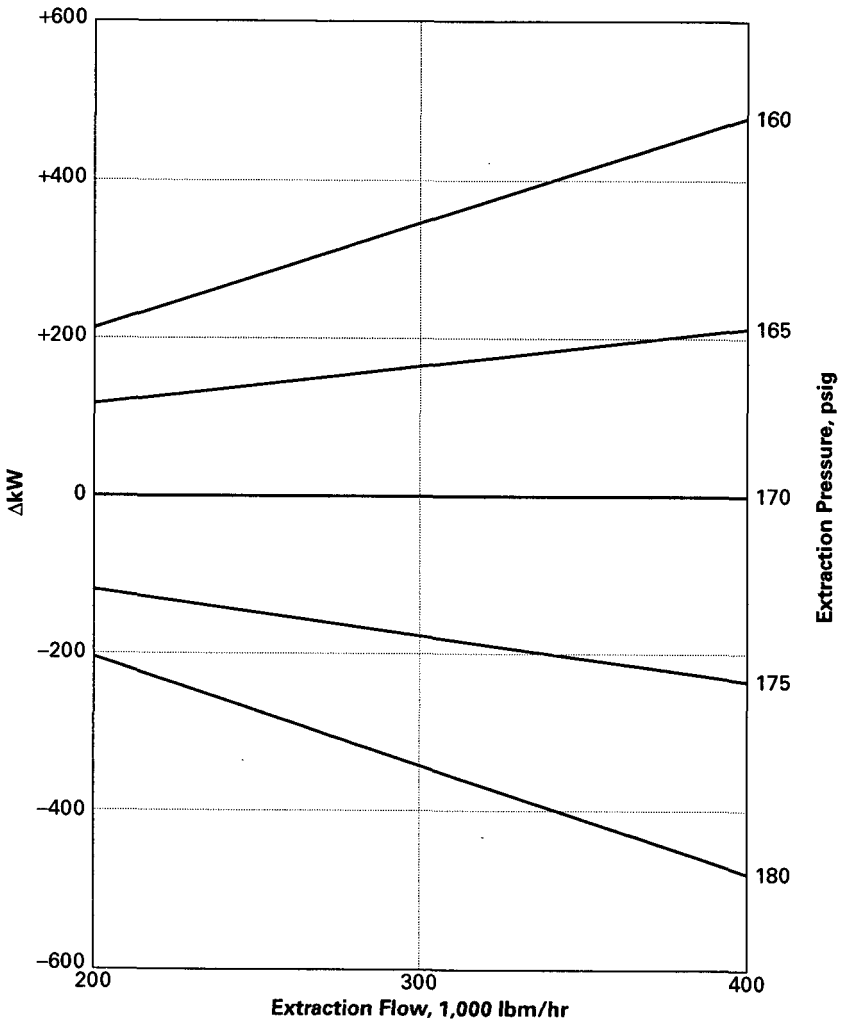

FIG. 11.5 EXTRACTION PRESSURE CORRECTION

Copyright ASME International
Provided by IHS under license with ASME
No reproduction or networking permitted without license from IHS
Not for Resale

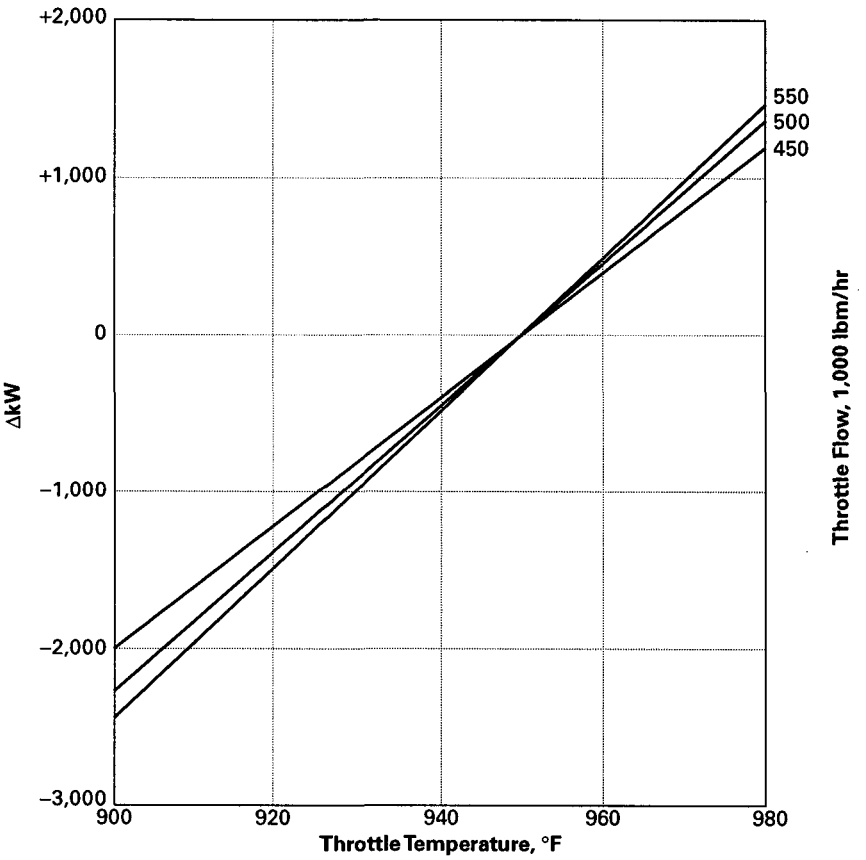

FIG. 11.6 THROTTLE TEMPERATURE CORRECTION

Copyright ASME International
Provided by IHS under license with ASME
No reproduction or networking permitted without license from IHS
Not for Resale

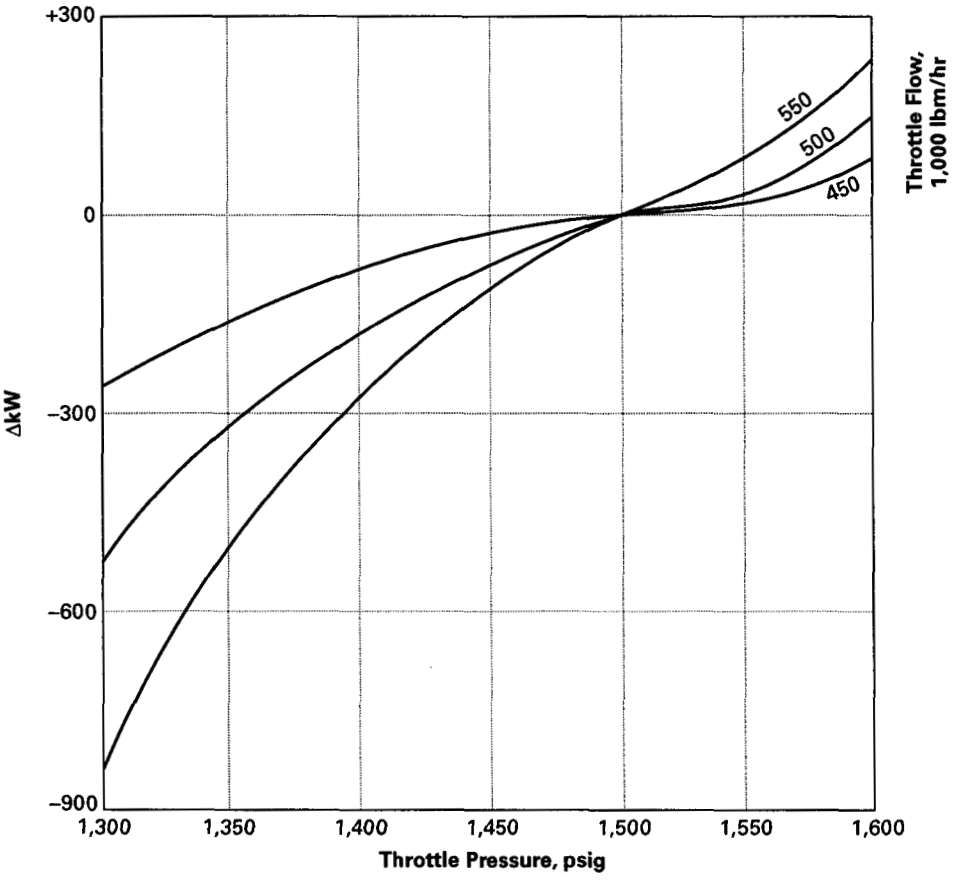

FIG. 11.7 THROTTLE PRESSURE CORRECTION

Copyright ASME International
Provided by IHS under license with ASME
No reproduction or networking permitted without license from IHS
Not for Resale

SECTION 12 — SAMPLE CALCULATION FOR A TEST OF A VARIABLE SPEED MECHANICAL DRIVE TURBINE

12.1 DESCRIPTION OF UNIT

The unit tested is a condensing turbine coupled to a centrifugal compressor. The design steam conditions are 1,500 psig, 900°F and exhausting at 4.00 in. Hga. The rated output is 50,000 hp at 4,200 rpm with a throttle flow of 299,000 lbm/hr. These conditions yield a steam rate of 5.980 lbm/hp-hr. Figure 12.1 indicates that main condensate is pumped through the steam jet air ejector condenser. The main condensate then passes through the remaining part of the plant cycle, which is of no importance in obtaining the performance of this turbine. Condensate from the steam jet air ejector condenser is routed to the main condenser. Specified performance at the specified steam and operating conditions is on a locus-of-valve-point basis as shown in Fig. 12.2.

12.2 DESCRIPTION OF TEST INSTRUMENTATION

Location of test instrumentation is shown in Fig. 12.1. This instrumentation arrangement is typical for a variable speed mechanical drive turbine test when the feedwater, boiler, and steam supply arrangement is not conducive to cycle isolation. Condensate flow from the main condenser is measured from a calibrated throat-tap nozzle in a flow section located at the outlet of the steam jet air ejector condenser. Throat-tap nozzle differential pressure is read from an absolute differential pressure transducer across each of two sets of taps. Condensate flow from the gland condenser is weighed using a bucket, weigh scale, and a stopwatch. Steam flow to the steam jet air ejector is measured with a calibrated orifice meter and a differential pressure transducer across the set of taps. The hotwell level is measured with a linear scale readable to $^1/_8$ in. Condensate pump gland leakage is measured with a bucket, weigh scale, and stop watch. Throttle and exhaust pressures are measured using calibrated absolute pressure transducers. Throttle temperature is measured with calibrated iron-constantan thermocouples with continuous wires and integral cold junctions, utilizing a precision potentiometer of the 0.03% accuracy class. Turbine shaft speed is determined by an electronic-integrating counter. The electronic-integrating counter interfaces with a data logger that provides a table of time versus turbine rotations per minute.

Power output is measured as the amount required by the driven machine. Since the driven machine is a compressor, the power is determined by the requirements of PTC 10-1997, *Compressors and Exhausters*. That code suggests the use of a torque meter to measure the torque at the coupling. The torsion member has a readable sensitivity of 0.25% and a maximum uncertainty of ±0.50% at the speed and load prevailing during the test. Agreement is reached prior to test on any deviation from rated power.

NOTE: The maximum deviation from rated speed allowed by the PTC 6 Code is 5%. However, PTC 10-1997, in Table 3.1 allows only a 2% deviation from rated speed. Therefore, when the turbine and driven equipment are tested simultaneously, allowable speed deviation for both machines will be governed by stricter code.

12.3 SUMMARY OF TEST DATA

All readings are corrected for instrument calibration and water legs, where applicable.

Throttle steam pressure	1,530.0 psig
Throttle steam temperature	890°F
Condensate flow	289,000 lbm/hr
Gland condenser drain flow	500 lbm/hr
Steam jet air ejector motive steam	300 lbm/hr
Exhaust pressure	4.10 in. Hga.
Driven machine computed power input	48,477 hp
Turbine speed	4,150 rpm
Barometric pressure	14.60 psia
Number of control valves wide open	3
Decrease in condenser hotwell storage	50 lbm/hr
Condensate pump gland leakage	60 lbm/hr

Copyright ASME International
Provided by IHS under license with ASME
No reproduction or networking permitted without license from IHS
Not for Resale

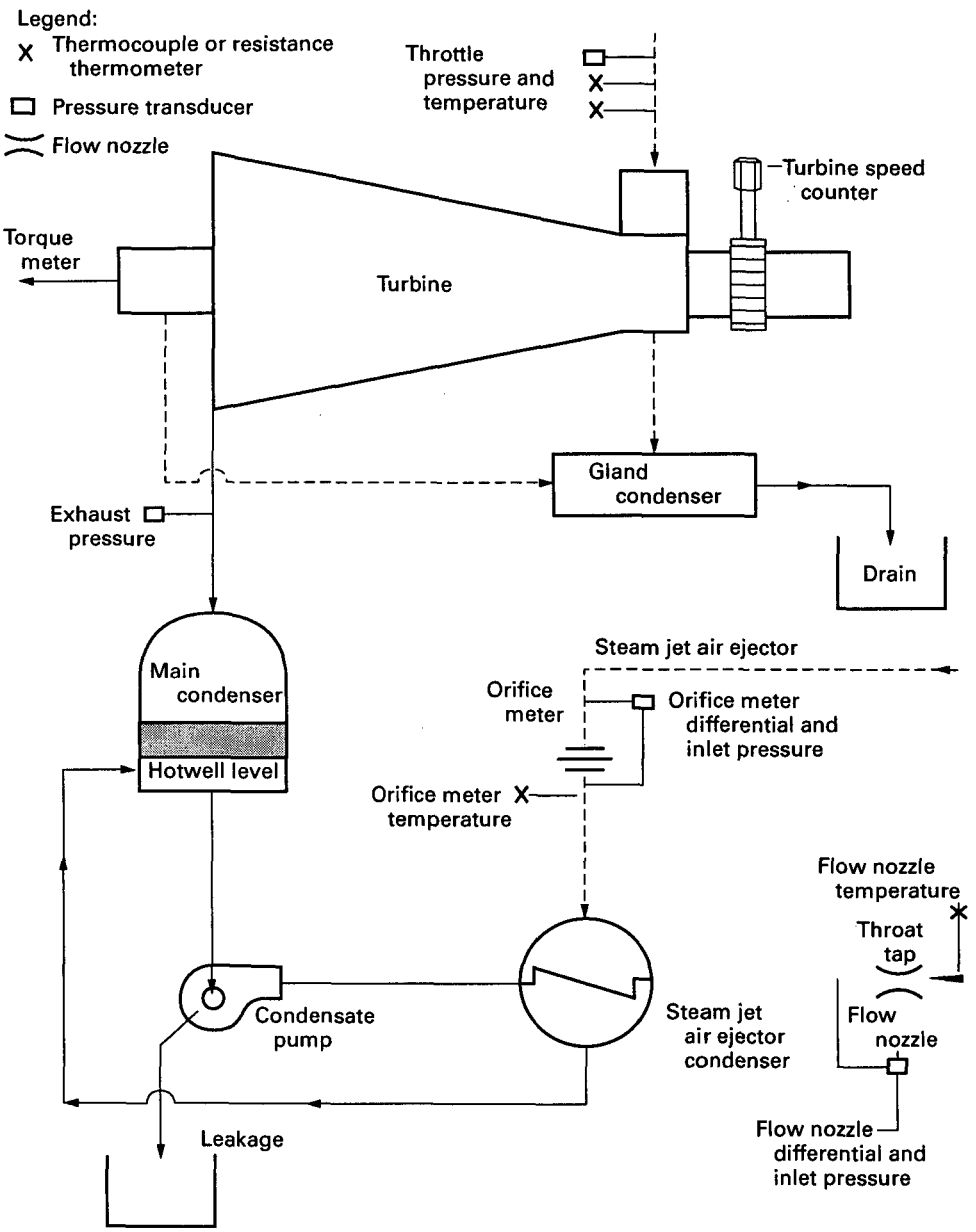

FIG. 12.1 FLOW AND INSTRUMENTATION DIAGRAM

Copyright ASME International
Provided by IHS under license with ASME
No reproduction or networking permitted without license from IHS
Not for Resale

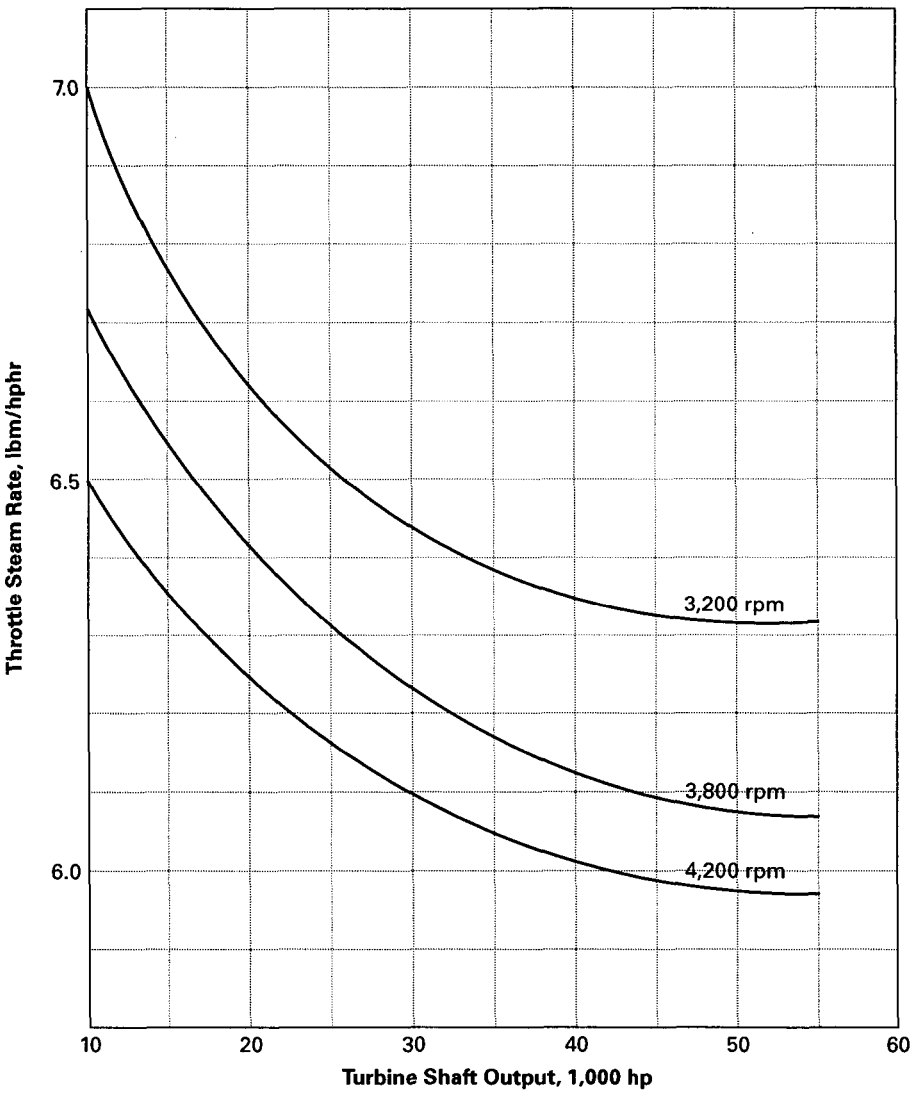

FIG. 12.2 THROTTLE STEAM RATE VERSUS TURBINE SHAFT OUTPUT

Copyright ASME International
Provided by IHS under license with ASME
No reproduction or networking permitted without license from IHS
Not for Resale

TABLE 12.1
CORRECTION DIVISORS FOR THE TEST STEAM CONDITIONS

Parameter	Figure Number	Test	Percent Change in Steam Rate	Correction Divisor
Turbine inlet pressure, psig	12.4	1,530.0	0.05	1.0005
Turbine inlet temperature, °F	12.5	890	0.95	1.0095
Turbine exhaust pressure, in. HgA	12.6	4.10	0.09	1.0009
Turbine speed, rpm	12.3	4,150	0.15	1.0015

12.4 CALCULATION OF TURBINE PERFORMANCE

The turbine throttle flow is determined by adjusting the measured condensate flow for the condensate pump gland leakage, the gland condenser drain flow, the hotwell level change, and the steam jet air ejector motive steam.

Throttle flow = condensate flow + condensate pump gland leakage flow + gland condenser drain flow + hotwell storage change − steam jet air ejector motive steam.

$$\text{Throttle flow} = 289{,}000 + 60 + 500 - 50 - 300$$
$$= 289{,}210 \text{ lbm/hr}$$

$$\text{Test steam rate} = \frac{\text{Throttle flow during test}}{\text{Turbine power output during test}}$$

$$\text{Test steam rate} = \frac{289{,}210}{48{,}477}$$
$$= 5{,}966 \text{ lbm/hp-hr}$$

The throttle steam flow is corrected to specified throttle steam pressure and temperature.

$$w_s = w_t \sqrt{\frac{p_s}{p_t} \times \frac{v_t}{v_s}}$$

where

w = turbine throttle steam flow rate, lbm/hr
p = turbine inlet steam pressure, psia
v = specific volume of steam at turbine inlet pressure and temperature, ft³/lbm
$_s$ = specified condition
$_t$ = test conditions

and

w_t = 289,210 lbm/hr
p_s = 1,500.0 + 14.7 = 1,514.7 psia
v_s at 1514.7 psia and 900°F = 0.48414 ft³/lbm
p_t = 1,530.0 + 14.6 = 1,544.6 psia
v_t at 1,544.6 psia and 890°F = 0.46864 ft³/lbm

$$w_s = 289{,}210 \times \sqrt{\frac{1{,}514.7}{1{,}544.6} \times \frac{0.46864}{0.48414}}$$
$$= 281{,}775 \text{ lbm/hr } (35.503 \text{ kg/s})$$

Corrections for the test steam conditions deviating from the specified steam conditions are made on a percent change in steam rate basis using the figures listed in Table 12.1.

The combined correction divisor (product of correction divisors) is 1.0124. The turbine test steam rate is corrected to specified steam conditions.

$$\text{Corrected test steam rate} = 5.966/1.0124$$
$$= 5.893 \text{ lbm/hp-hr}$$

The load corrected to specified steam conditions is determined from the corrected flow and the corrected steam rate.

$$\text{Corrected test load} = \text{Corrected flow/Corrected steam rate}$$
$$= 281{,}775/5.893$$
$$= 47{,}815 \text{ hp}$$

The turbine is tested at a valve point with three control valves wide open with the specified steam rate to be determined from the valve point locus curve at the corrected load (Fig. 12.2).

Specified steam rate = 5.9800 lbm/hphr (2.0230 kg/kWh)

Corrected test steam rate is therefore 1.45% better than specified.

Additional tests at other valve points can be run. At conditions other than those specified, the appropriate correction curves should be used. See Figs. 12.3 through 12.6.

Copyright ASME International
Provided by IHS under license with ASME
No reproduction or networking permitted without license from IHS
Not for Resale

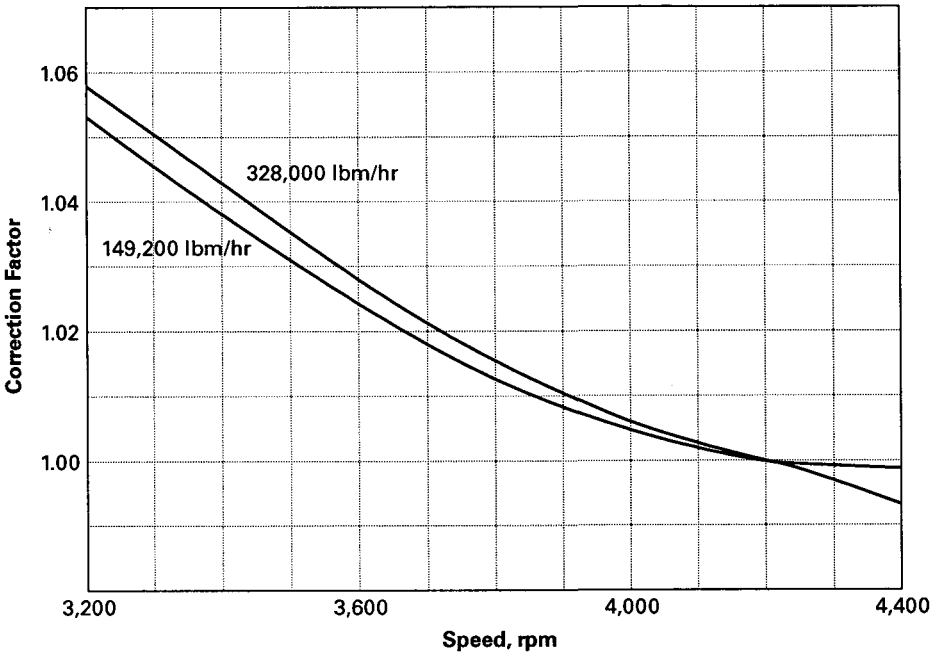

FIG. 12.3 STEAM RATE CORRECTION FACTOR VERSUS SPEED

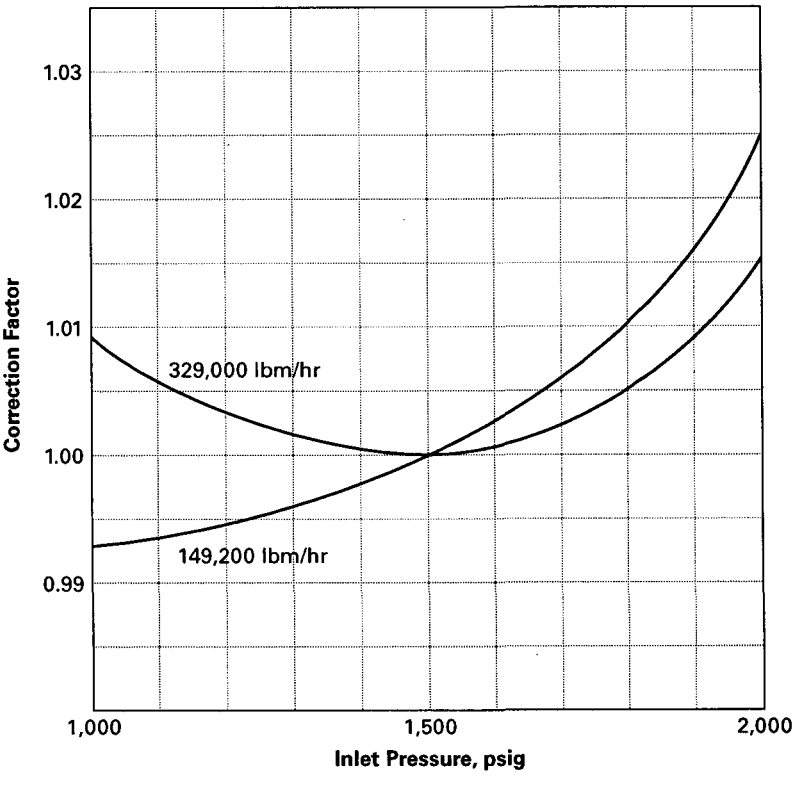

GENERAL NOTE: Figures on curves are throttle flows.

FIG. 12.4 STEAM RATE CORRECTION FACTOR VERSUS INLET PRESSURE

Copyright ASME International
Provided by IHS under license with ASME
No reproduction or networking permitted without license from IHS
Not for Resale

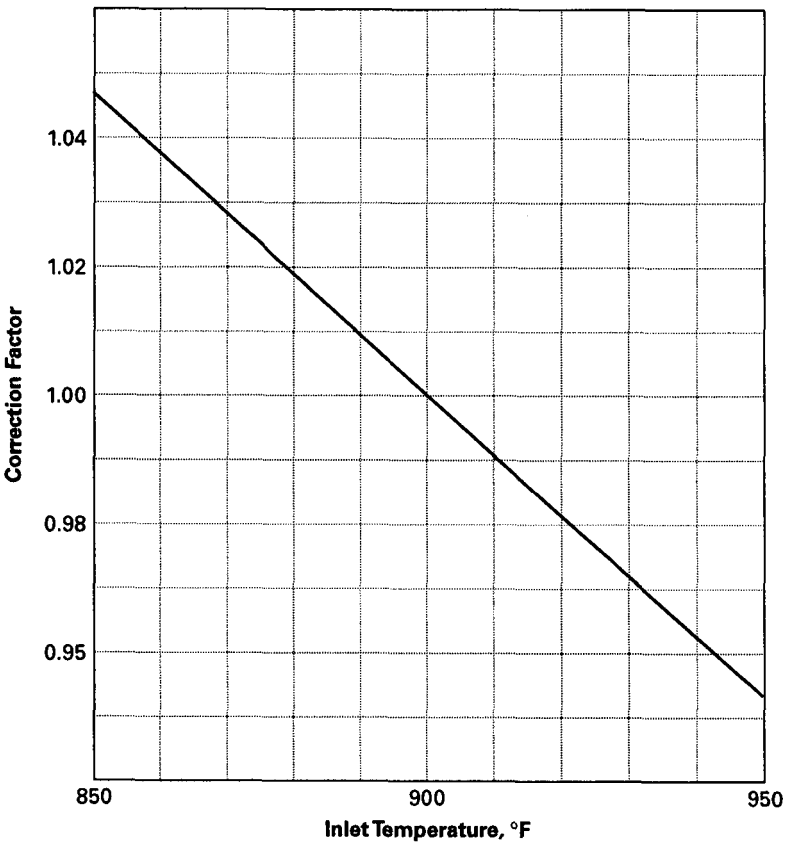

FIG. 12.5 STEAM RATE CORRECTION FACTOR VERSUS INLET TEMPERATURE

Copyright ASME International
Provided by IHS under license with ASME
No reproduction or networking permitted without license from IHS
Not for Resale

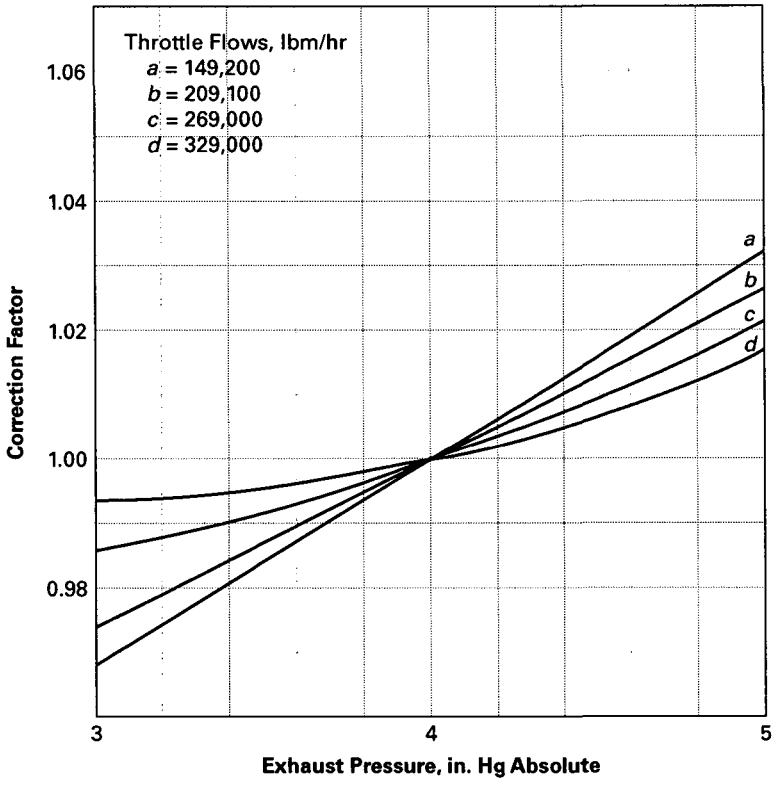

FIG. 12.6 STEAM RATE CORRECTION FACTOR VERSUS EXHAUST PRESSURE

Copyright ASME International
Provided by IHS under license with ASME
No reproduction or networking permitted without license from IHS
Not for Resale

SECTION 13 — SAMPLE CALCULATION FOR A TEST OF A REFURBISHED LP TURBINE USING U.S. CUSTOMARY UNITS

13.1 DESCRIPTION OF UNIT

A refurbished low pressure turbine was installed in a 950 MW nuclear power plant. The turbine was a tandem-compound four-flow unit, with a regenerative cycle and external moisture separator reheater with saturated steam supplied from a nuclear steam supply system. The generator was rated at 1,000 MVA at 0.95 power factor and 60 psig hydrogen pressure. The cycle had an auxiliary turbine for the feedwater pump drive, six stages of feedwater heating, and an HP heater drain tank. There was no feedwater storage tank.

The unit was tested to determine the improvement of performance with respect to the condition of the unit, prior to the replacement of the LP turbine.

The reference performance for the comparison was based on the results of a baseline test carried out prior to the replacement. After the replacement, a verification test was performed at plant operating conditions close to those measured during the baseline test conditions to determine the performance improvement. Thus, corrections were applied to the verification test, with the baseline test parameters becoming the base reference.

13.2 DEFINITIONS

The definitions used in the equations in this Section and the measurement results of the performance tests (baseline and verification) are listed in Table 13.1.

Where constants are given, the engineering units used are indicated; otherwise, the expressions apply to any engineering unit system.

The convention f( ) is used to indicate "a function of."

13.3 TEST DESCRIPTION: DESCRIPTION OF INSTRUMENTATION

13.3.1 The actual performance of a steam turbine is evaluated by a PTC 6 test. In this example, the expected performance of the replaced LP steam path was given as an increase of electrical power output defined as:

$$P_I = P_{VER} - P_{BL}$$

where

P_I = power output increase
P_{BL} = power output prior to LP replacement
P_{VER} = power output after the LP replacement

The expected power output increase at 100% thermal power due to LP turbine efficiency improvement was, as per the above definition:

$$P_I = 12\ MW$$

13.3.2 The actual change of performance was thus determined according to the following procedure:

(a) Conduct of a steam turbine baseline test (reference test) prior to the replacement.

(b) Conduct of a steam turbine verification test after the replacement, replicating to the extent possible the operating conditions during the baseline test.

(c) Adjustment (correction) of the results of both tests to equal operating conditions: verification to baseline.

(d) Adjustment (correction) of both tests to nominal condenser pressure (2 in. Hg abs in this example) and nominal 100% thermal power (2,785.0 MW_{th} in this example).

For these tests, the existing measurement points (pressure taps, sensing lines, thermowells, and flow measuring devices) were used to the extent possible. Dedicated test instrumentation was temporarily installed at these measurement points as indicated in Fig. 13.1. The unlabeled measurement points on Fig. 13.1 were used for reference purposes only and are not involved in the calculations.

All test instrumentation was calibrated prior to each test series.

Copyright ASME International
Provided by IHS under license with ASME
No reproduction or networking permitted without license from IHS
Not for Resale

TABLE 13.1
RESULTS OF BASELINE AND VERIFICATION TESTS

Value	Symbol	Baseline Test	Verification Test	Unit
p, feedwater to steam generator	$[p_{ffw}]$	1,024.2	1,033.0	psia
w, feedwater to steam generator	$[w_{fw}]$	12,227,040	12,283,920	lbm/hr
h, feedwater to steam generator	$[h_{ffw}]$	418.56	417.45	Btu/lbm
p, main steam and throttle	$[p_{msat}]$	964.85	973.00	psia
h, main steam and throttle	$[h_{msat}]$	1,191.6	1,191.3	Btu/lbm
x, main steam and throttle	$[x_{msat}]$	0.4	0.4	%
w, main steam and throttle	$[w_{msat}]$	12,216,960	12,275,640	lbm/hr
p, LPT inlet from MSR	$[p_{lpti}]$	198.47	191.17	psia
t, LPT inlet from MSR	$[t_{lpti}]$	503.31	503.14	°F
p, LPT exhaust	$[p_{lptexh}]$	2.7200	2.7727	in. Hg abs
		1.3356	1.3618	psia
p, SGFPT steam supply	$[p_{fpti}]$	200.98	195.18	psia
t, SGFPT steam supply	$[t_{fpti}]$	498.00	497.34	°F
w, SGFPT steam supply	$[w_{ftpi}]$	124,600	127,469	lbm/hr
t, hotwell	$[t_{hw}]$	109.35	111.41	°F
t, condensate subcooling	$[t_{sc}]$	2.26	1.38	°F
t, heater 6 condensate outlet	$[t_{htr6co}]$	161.17	179.35	°F
p, heater 6 extraction steam	$[p_{htr6ext}]$	5.4314	8.2962	psia
t, heater 5 condensate outlet	$[t_{htr5co}]$	226.84	228.06	°F
p, heater 5 extraction steam	$[p_{htr3ext}]$	22.224	22.251	psia
t, heater 4 condensate outlet	$[t_{htr4co}]$	299.17	294.41	°F
p, heater 4 extraction steam	$[p_{htr4ext}]$	70.384	64.644	psia
p, heater 3 extraction steam	$[p_{htr3ext}]$	114.95	117.20	psia
t, heater 3 extraction steam	$[t_{htr3ext}]$	430.53	433.18	°F
t, heater 3 drain	$[t_{htr3dr}]$	304.44	302.49	°F
p, heater 3 condensate outlet	$[p_{htr3co}]$	465.92	463.47	psia
t, heater 3 condensate outlet	$[t_{htr3co}]$	333.81	334.99	°F
t, feedwater pump discharge	$[t_{sgfpd}]$	347.09	348.84	°F
p, feedwater pump discharge	$[p_{sgfpd}]$	1,192.5	1,203.3	psia
t, heater 2 condensate outlet	$[t_{htr2co}]$	376.29	374.99	°F
p, heater 2 extraction steam	$[p_{htr2ext}]$	197.83	193.15	psia
t, heater 1 feedwater outlet	$[t_{ffw}]$	439.22	438.22	°F
p, heater 1 extraction steam	$[p_{htr1ext}]$	393.30	386.96	psia
w, drain pump discharge	$[w_{drpd}]$	3,525,192	3,689,640	lbm/hr
p, drain RHTR stage 1	$[p_{rhtr1dr}]$	527.88	518.87	psia
w, drain RHTR stage 1	$[w_{rhtr1dr}]$	520,596	536,580	lbm/hr
t, MS inlet second stage RHTR	$[t_{rhtr2msi}]$	453.65	450.05	°F
p, drain RHTR stage 2	$[p_{rhtr2dr}]$	970.48	977.28	psia
w, drain RHTR stage 2	$[w_{rhtr2dr}]$	470,808	483,444	lbm/hr
TTD reheater 1	$[TTD_{rhtr1}]$	18.99	20.79	°F
TTD reheater 2	$[TTD_{rhtr2}]$	37.65	38.70	°F
reactor thermal power	$[P_{th}]$	2,766.4	2,782.9	MW
electrical power output	$[P_e]$	926.91	942.50	MW
power factor	$[pf]$	0.9708	0.9707	. . .
cycle losses	$[w_{closs}]$	10,000	8,254	lbm/hr

GENERAL NOTE: Symbols in brackets are used in equations.

p = pressure w = mass flow x = steam wetness

t = temperature h = enthalpy

Copyright ASME International
Provided by IHS under license with ASME
No reproduction or networking permitted without license from IHS
Not for Resale

13.3.3 The flow measurements were performed in accordance with PTC 6 and PTC 19.5 using three different types of permanently installed flow measuring devices:

(a) ASME nozzles for the feedwater flow.

(b) Orifices for the steam mass flow to the feedwater pump turbines.

(c) Pitot sensors for the heater and reheater drain and the drain pump discharge flows.

All these test elements were in-place devices. Not all of these instruments had been calibrated originally, and none of them was recalibrated or inspected prior to the testing. Special care was taken to ensure that these devices remained untouched during the period between the baseline and the verification test to ensure best repeatability.

The flows were calculated with the individual geometric and calibration data available.

The water levels of the heater drain tank and the hotwell were measured by direct readings of the local indicators.

To determine the total net electrical power output and the power factor, the voltage, current, and power output of each generator phase were measured at the station PTs and CTs according to the three wattmeter method using calibrated precision instrumentation. These PTs and CTs were not removed for recalibration; their original calibration data was used. The H_2 pressure was recorded to ensure constant (rated) setting.

The test data was recorded with a computer-controlled data acquisition system especially set up for performance testing.

The tests were run at nominal thermal power. The test period was 2 hr and the data recording frequency was 30 sec. Duplicate test runs were performed to check repeatability and reduce random test uncertainty.

The mean values of the measured pressures, temperatures, and load were calculated linearly, whereas the mean values of the differential pressures were calculated as the square of the mean value of the square root of the individual pressure differentials. Further processing of the test data consisted of a statistical analysis for maximum/minimum values, standard deviation, covariance, zero/negative values, and eccentricity. The test results summarized in Table 13.1 are the mean values calculated from a total number of 240 readings per test.

13.3.4 A properly isolated water/steam cycle is mandatory to provide a high level of test repeatability. The cycle was isolated following as closely as possible the recommendations of PTC 6. The cycle isolation procedure was meticulously recorded to be able to repeat as exactly as possible the baseline isolation conditions for the verification tests. The following methods were applied to verify a proper and repeatable cycle isolation:

(a) Visual inspection of steam blowing to the atmosphere and water leakages.

(b) Local inspection of the required setting of the cycle valves.

(c) Measurement of the upstream and downstream temperatures at the valves and comparison with the corresponding temperatures recorded during the previous test.

(d) Sensitivity tests with open and closed valve positions to determine repeatability of isolation.

(e) Verification that the PTC 6 requirement for unaccounted-for leakages (≤0.1% of main steam flow) was met for all tests.

13.4 CALCULATION DESCRIPTION

This sample calculation was conducted with the data of the baseline test. The procedure is identical for the verification test. At the end of this Section, the correction of the results of the verification test to the operating conditions during the baseline test is described. Test data for both tests is included in Table 13.1.

13.4.1 Calculation of Mass Flows. The cycle losses were determined by measuring the water level drop in the hotwell during the test (the make-up water was isolated). The hotwell cross section area was assumed as constant. Reductions of cross section area due to hotwell internals were not taken into account.

The determined unaccounted-for cycle losses were

$$[w_{closs}] = 10{,}000 \text{ lbm/hr}$$

(a) Total Feedwater Mass Flows: ASME Nozzles. Calculated according to PTC 6 and using the original calibration data.

$$[w_{fw}] = 12{,}227{,}040 \text{ lbm/hr}$$

This number is the sum of the individual mass flows measured at each of the three feedwater lines.

(b) Steam Mass Flow to SGFPT: Orifice Plates. Calculated according to PTC 19.5 and using the design geometrical data.

Copyright ASME International
Provided by IHS under license with ASME
No reproduction or networking permitted without license from IHS
Not for Resale

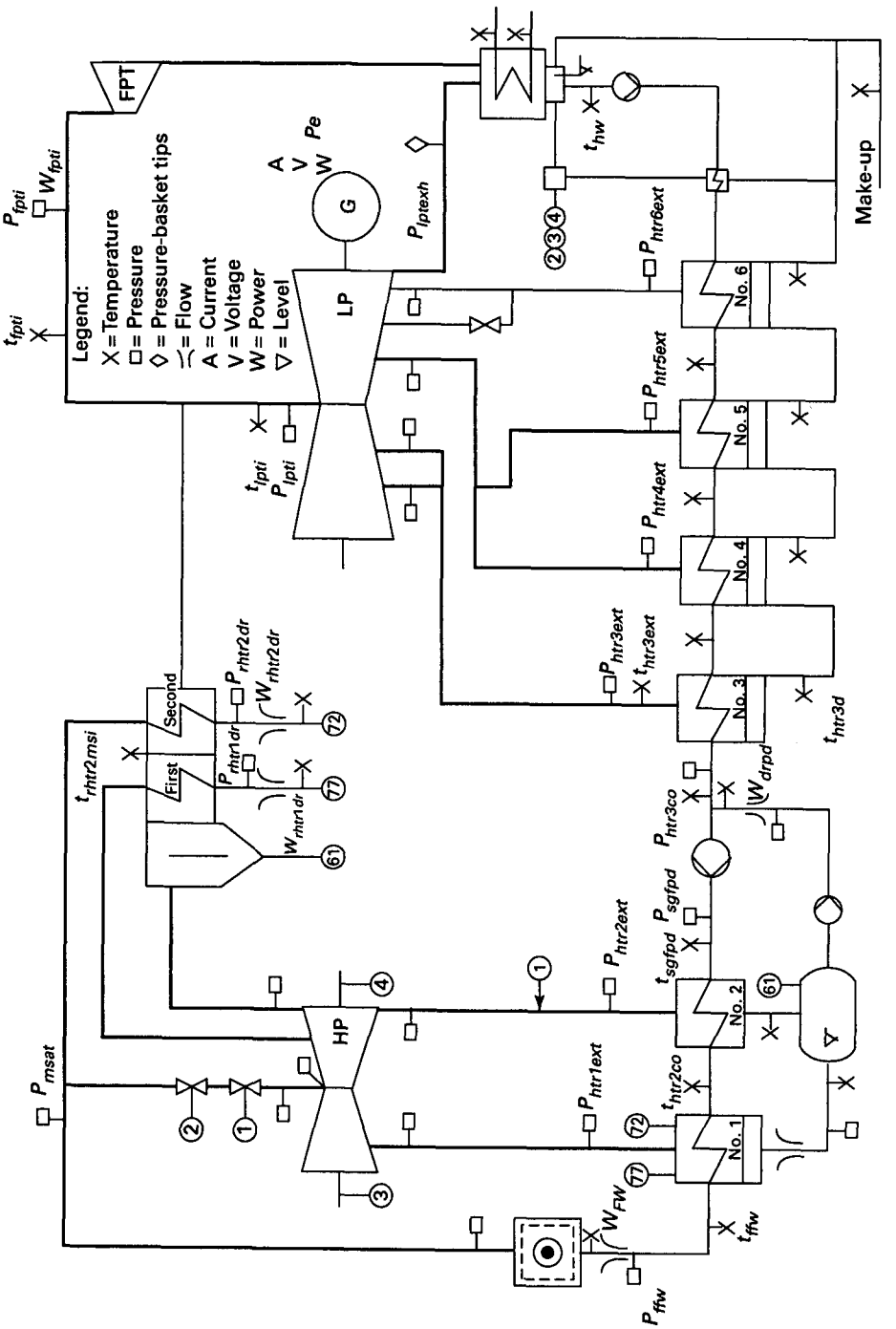

FIG. 13.1 LOCATION OF TEST INSTRUMENTATION FOR TEST OF REFURBISHED LP TURBINE

Copyright ASME International
Provided by IHS under license with ASME
No reproduction or networking permitted without license from IHS
Not for Resale

$$[w_{fpti}] = 124{,}600 \text{ lbm/hr}$$

(c) Total Mass Flow at Drain Pump Discharge. Calculated according to the data sheets of the manufacturer of the pitot sensors and the nominal pipe diameter.

$$[w_{drpd}] = 3{,}525{,}192 \text{ lbm/hr}$$

Condensate Flow

$$\begin{aligned}[w_{cond}] &= [w_{fw}] - [w_{drpd}] \\ &= 12{,}227{,}040 - 3{,}525{,}192 \\ &= 8{,}701{,}848 \text{ lbm/hr}\end{aligned}$$

(d) Main Steam Flow From the Steam Generators

$$\begin{aligned}[w_{ms}] &= [w_{fw}] - [w_{closs}] \\ &= 12{,}227{,}040 - 10{,}000 \\ &= 12{,}217{,}040 \text{ lbm/hr}\end{aligned}$$

taking 100% of the unaccounted-for cycle losses as main steam losses.

(e) Steam Mass Flow to the LP Turbines. This mass flow is not used for the verification; it is determined only for reference purposes.

$$\begin{aligned}[w_{lptmsi}] &= [w_{cond}] - [w_{fpti}] - [w_{closs}] - 24{,}768 \\ &= 8{,}701{,}848 - 124{,}600 - 10{,}000 - 24{,}768 \\ &= 8{,}542{,}480 \text{ lbm/hr}\end{aligned}$$

The value of 24,768 lbm/hr above accounts for the main steam valve leakages and for the sealing steam from the HP turbine. These mass flows were not measured but assumed to be equal to the design values.

13.4.2 TTD Reheaters

(a) Reheater 1

$$\begin{aligned}p_{rhtr1dr} &= 527.88 \text{ psia; } \Rightarrow \text{ Saturation Temperature} \\ &= 472.64°\text{F}\end{aligned}$$

$$\begin{aligned}TTD_{rhtr1} &= 472.64 - [t_{rhtr2msi}] \\ &= 472.64 - 453.65 = 18.99°\text{F}\end{aligned}$$

(b) Reheater 2

$$\begin{aligned}p_{rhtr2dr} &= 970.48 \text{ psia; } \Rightarrow \text{ saturation temperature} \\ &= 540.96°\text{F}\end{aligned}$$

$$\begin{aligned}TTD_{rhtr2} &= 540.96 - [t_{lpti}] = 540.96 - 503.31 \\ &= 37.65°\text{F}\end{aligned}$$

13.4.3 Condensate Subcooling. Condensate subcooling is determined as the difference of the saturated temperature of the LP exhaust steam at condenser pressure and the hotwell temperature.

$$\begin{aligned}\text{LP-Turbine Exhaust Pressure: } p_{lptexh} &= 2.72 \text{ in. Hg abs} \\ &= 1.3356 \text{ psia} \\ \text{saturation temperature} &= 111.61°\text{F} \\ \text{Hotwell temperature: } t_{hw} &= 109.35°\text{F} \\ \text{Condensate subcooling: } t_{sc} &= 111.61 - [t_{hw}] \\ &= 2.26°\text{F}\end{aligned}$$

13.4.4 Main Steam Moisture Content. The main steam moisture content x_{ms} at the outlet of the steam generators was assumed to be 0.0%. To account for pressure drop, the moisture content of the main steam at the throttle valves was assumed to be equal to design with $x_{msat} = 0.4\%$. This value was used for the calculation of the thermal power.

13.4.5 Calculation of Thermal Power. The thermal power, P_{th}, of the unit was calculated as follows:

$$P_{th} = (w_{ms} \times h_{msat}) - (w_{fw} \times h_{ffw})$$

where

$$\begin{aligned}[h_{ffw}] &= f([p_{ffw}], [t_{ffw}]) \\ &= f(1{,}023.0 \text{ psia}, 439.22°\text{F}) = 418.56 \text{ Btu/lbm} \\ [h_{msat}] &= f([p_{msat}], [x_{msat}]) \\ &= f(964.85 \text{ psia}, 0.4\%) = 1{,}191.6 \text{ Btu/lbm}\end{aligned}$$

Copyright ASME International
Provided by IHS under license with ASME
No reproduction or networking permitted without license from IHS
Not for Resale

thus

$$P_{th} = (12{,}217{,}040 \times 1{,}191.6 - 12{,}227{,}040 \times 418.56) \times C = 2{,}766.4 \text{ MW}$$

where C is the conversion factor of [Btu/hr] → [MW] = 1/(3,412.14 × 1,000)

13.4.6 Test Corrections. The overall plant operating conditions were replicated to the extent possible for the baseline and verification tests. Nonidentical LP boundary operating conditions between the baseline and verification test (e.g., feedwater mass flow, final feedwater temperature, condenser pressure, main steam pressure) were adjusted to a common reference framework using the appropriate correction curves. The following corrections were applied:

(a) The Group 2 corrections were
- *(1)* Power output versus main steam pressure
- *(2)* Power output versus condenser pressure
- *(3)* Power output versus steam mass flow to SGFPT
- *(4)* Power output versus RHTR stage 1 TTD
- *(5)* Power output versus RHTR stage 2 TTD

(b) The Group 1 corrections were
- *(1)* Power output versus final feedwater temperature
- *(2)* Power output versus condensate subcooling
- *(3)* Power output versus condensate make-up
- *(4)* Power output versus generator power factor

13.4.6.1 Baseline Test Correction. The baseline test was corrected only for condenser pressure and thermal power using the following definition:

$$P_{ec}\text{ baseline} = \frac{P_e\text{ baseline}}{CD_{cp}} \times \frac{P_{th}\text{ 100\% nominal}}{P_{th}\text{ baseline}}$$

P_{ec} baseline = corrected electrical turbine output (baseline test)
P_e baseline = measured electrical turbine output (baseline test)
P_{th} baseline = thermal power (baseline test)
P_{th} 100% nominal = nominal 100% thermal power = 2,785 MW
CD_{cp} = correction divisor to account for [in. Hga] change in condenser pressure [dp_{lptexh}] referred to 2 in. Hga

Correction curve equation (for the original LP turbine):

$$CD_{cp} = 0.94836 + 6.4450\text{E-}2\ [pl_{ptexh}] - 2.4678\text{E-}2\ [p_{lptexh}]^2 + 2.6692\text{E-}3\ [p_{lptexh}]^3$$

p_{lptexh} = 2.72 in Hg abs.

CD_{cp} = 0.9948

Thus, the corrected result of the baseline test was:

$$P_{ec}\text{ baseline} = \frac{926.91}{0.9948} \times \frac{2{,}785}{2{,}766.4}$$

$$P_{ec}\text{ baseline} = 938.0 \text{ MW}$$

13.4.6.2 Verification Test Correction. The corrected power output of the verification test was obtained using the following expressions:

$$P_{ec\ verification} = \frac{P_{e\ verification}}{CD_{verification}} \times \frac{P_{th\ 100\%\ nominal}}{P_{th\ verification}} + dL_g$$

$P_{ec\ verification}$ = corrected electrical turbine output (verification test)
$P_{e\ verification}$ = measured electrical turbine output (verification test)
$P_{th\ verification}$ = thermal power (verification test)
$P_{th\ 100\%\ nominal}$ = nominal 100% thermal power = 2,785 MW
dL_g = change of generator losses
$CD_{verification}$ = correction divisor, determined as the product of all correction divisors applicable to the verification test
$CD_{verification}$ = CD1 + CD2 + CD3 + CD4 + CD5 + CD6 + CD7 + CD8

(a) CD1 correction curve equation: correction divisor to account for percent change in main steam pressure [dp_{msat}]

$$CD1 = 1 + 0.1565\text{E-}2\ [dp_{msat}] - 0.1342\text{E-}4 \cdot [dp_{msat}]^2$$

$$dp_{msat} = \frac{973.00 - 964.85}{964.85} \times 100 = 0.84\%$$

$$CD1 = 1.0013$$

(b) CD2 correction curve equation: correction divisor to account for [°F] change in final feedwater temperature [dt_{ffw}]

Copyright ASME International
Provided by IHS under license with ASME
No reproduction or networking permitted without license from IHS
Not for Resale

$$CD2 = 1 + 3.603E\text{-}4\ [dt_{ffw}] + 2.0545E\text{-}6\ [dt_{ffw}]^2$$

$$dt_{ffw} = 438.22 - 439.22 = -1°F$$

$$CD2 = 0.9996$$

(c) CD3 correction curve equation for the replacement turbine: correction divisor to account for a deviation of condenser pressure $[dp_{lptexh}]$ referred to the design value of 2 in. Hg abs

$$CD3 = 0.93443 + 8.0840E\text{-}2\ [p_{lptexh}] - 2.9817E\text{-}2\ [p_{lptexh}]^2 + 2.888E\text{-}3\ [p_{lptexh}]^3$$

$$p_{lptexh} = 2.7727 \text{ in. Hg abs}$$

$$CD3 = 0.9909$$

(d) CD4 correction curve equation: correction divisor to account for a percent change in steam mass flow to SGFPT $[dw_{fpti}]$

$$CD4 = 1 - 9.567E\text{-}5\ [dw_{fpti}] + 1.146E\text{-}6\ [dw_{fpti}]^2$$

$$dw_{fpti} = \frac{127{,}469 - 124{,}600}{124{,}600} \times 100 = 2.30\%$$

$$CD4 = 0.9998$$

(e) CD5 correction curve equation: correction divisor to account of a percent change in steam mass flow to RHTR stage 1 $[dw_{rhtr1\,dr}]$

$$CD5 = A_o + A_1\ [dw_{rhtr1\,dr}]$$

$$dw_{rhtr1\,dr} = \frac{536{,}580 - 520{,}596}{520{,}596} \times 100 = 3.07\%$$

$$TTD_{rhtr1} = 20.79°F$$

TTD, °F	A_o	A_1
17.0	1.00003	−4.861E-5
20.8	1.00002	−4.906E-5
26.2	1.00083	−4.958E-5
29.8	0.99999	−4.981E-5
33.4	0.99915	−5.024E-5
38.8	0.99787	−5.047E-5

For a TTD between two of the above lines, a linear interpolation at the specific flow point is required.

$$CD5 = 0.9999$$

(f) CD6 correction curve equation: correction divisor to account for a percent change in steam mass flow to RHTR stage 2 $[dw_{rhtr2dr}]$

$$CD6 = B_o + B_1\ [dw_{rhtr2\,dr}] + B_2\ [dw_{rhtr2\,dr}]^2$$

$$dw_{rhtr1\,dr} = \frac{483{,}444 - 470{,}808}{470{,}808} \times 100 = 2.68\%$$

$$TTD_{rhtr2} = 38.70°F$$

TTD, °F	B_o	B_1	B_2
17.0	1.00074	3.912E-5	1.274E-7
20.8	1.00051	3.759E-5	1.258E-7
26.2	1.00020	3.549E-5	1.278E-7
29.8	0	3.404E-5	1.270E-7
33.4	0.99981	3.259E-5	1.282E-7
38.8	0.99953	3.039E-5	1.274E-7

For a TTD between two of the above lines, a linear interpolation at the specific flow point is required.

$$CD6 = 0.9996$$

(g) CD7 correction curve equation: correction divisor to account for a °F change in condensate subcooling $[dt_{sc}]$

$$CD7 = 1 - 1.111E\text{-}4\ [dt_{sc}]$$

$$dt_{sc} = 1.38 - 2.26 = -0.88\ °F$$

$$CD7 = 1.0001$$

(h) CD8 correction curve equation: correction divisor to account for a [Btu/hr] change in make-up water heat flow $[dE_{mu}]$

$$CD8 = 1.0000 - 2.451E\text{-}8\ [dE_{mu}] = 1.0000$$

Because the cycle was properly isolated during both tests the make-up water heat flow $[dE_{mu}] = 0$.

$$CD8 = 1.0000$$

Summary of correction divisors for the verification test is as follows:

Correction divisor to account for changes in:		
Main steam pressure	CD1	1.0013
Final feedwater temperature	CD2	0.9996
Condenser pressure	CD3	0.9909
Steam mass flow to SGFPT	CD4	0.9998
Steam mass flow to RHTR stage 1	CD5	0.9999
Steam mass flow to RHTR stage 2	CD6	0.9996
Condensate subcooling	CD7	1.0001
Make-up water energy flow	CD8	1.0000
Combined divisor $CD_{verification}$		**0.9912**

dL_g: change of generator losses due to differences of power factor

Copyright ASME International
Provided by IHS under license with ASME
No reproduction or networking permitted without license from IHS
Not for Resale

Generator losses equation:

$$L = 3.83536 - 1.66033E\text{-}3\frac{[P_e]}{[pf]} + 8.62963E\text{-}6\frac{[P_e]^2}{[pf]^2}$$

and the change of generator losses:

$$dL_g = L_{pf\ verification} - L_{pf\ baseline}$$

or

$$dL_g = 1.66033E\text{-}3\ [P_{e\ verification}]\left(\frac{1}{[pf_{baseline}]} - \frac{1}{pf_{verification}}\right)$$

$$+ 8.62963E\text{-}6\ [P_{e\ verification}]\left(\frac{1}{pf_{verification}^2} - \frac{1}{pf_{baseline}^2}\right)$$

$$dL_g = 1.66033E\text{-}3 \times 942.50\left(\frac{1}{0.9707} - \frac{1}{0.09708}\right)$$

$$+ 8.62963E\text{-}6 \times 942.50\left(\frac{1}{0.9707^2} - \frac{1}{0.9708^2}\right)$$

dL_g = approx. 0

The corrected result of the verification test was

$$P_{ec\ verification} = \frac{942.50}{0.9912} \times \frac{2{,}785}{2{,}782.9} + 0$$

$$P_{ec\ verification} = 951.6\ \text{MW}$$

13.4.7 Performance Verification Equation. With the so calculated and corrected results, the actual, measured increase of the power output resulted in

$$P_I = P_{ec\ verification} - P_{ec\ baseline}$$

$$P_I = (951.6 - 938.0)\ \text{MW}$$

$$P_I = 13.6\ \text{MW}$$

or

13.6 − 12.0 = 1.6 MW better than expected.

Copyright ASME International
Provided by IHS under license with ASME
No reproduction or networking permitted without license from IHS
Not for Resale

ISBN 0-7918-2660-0



C02900

Copyright ASME International
Provided by IHS under license with ASME
No reproduction or networking permitted without license from IHS

Not for Resale