Erratum
to
ASME PTC 6-2004
Steam Turbines

On page 13, Table 3-1, first entry under second column is corrected by erratum to read "±3.0% of the absolute pressure." See revised table on the overleaf.

THE AMERICAN SOCIETY OF MECHANICAL ENGINEERS
Three Park Avenue, New York, NY 10016-5990

February 2006

C2804E

Copyright ASME International
Provided by IHS under license with ASME
No reproduction or networking permitted without license from IHS

Not for Resale

Table 3-1 Permissible Deviation of Variables

Variable	Permissible Deviation for the Average of the Test Conditions from Design or Rated Conditions [Note (1)]	Permissible Fluctuations During Any Test Run [Note (2)]
Initial steam pressure	±3.0% of the absolute pressure	±0.25% of the absolute pressure or 5.0 psi (34.5 kPa), whichever is larger
Initial and reheat steam temperature	±15°F (8K) when superheat is 27°–50°F (15–30K); ±30°F (16K) when superheat is in excess of 50°F (30K)	±4°F (2K) when superheat is 27°–50°F (15–30K); ±7°F (4K) when superheat is in excess of 50°F (30K)
Initial steam quality	±0.5 percentage points of quality for turbines with wet throttle steam	±0.1 percentage points of quality for turbines with wet throttle steam
Primary flow	Not specified	Refer to para. 4-10.1
Secondary flows	±5.0% × (primary flow)/(secondary flow)	Same as (d) × (primary flow)/(secondary flow)
Pressure drop through fossil unit reheater	±50.0%	
Extraction pressures	±5.0%	
Extraction flows [Note (3)]	±5.0%	
Temperature of feed water leaving final heater	±10°F (6K)	
Exhaust pressure [Note (4)]	±0.05 psi (0.34 kPa) or ±2.5% of the absolute pressure, whichever is larger	±0.02 psi (0.14 kPa) or ±1.0% of the absolute pressure, whichever is larger
Load	Refer to para. 3-13.5	±0.25%
Voltage	±5.0%	
Power factor	Not specified	±1.0%
Speed	±5.0%	±0.25%
Aggregate isentropic enthalpy drop of anyone of the sections of an automatic-extraction turbine	±10.0%	

NOTES:

(1) In any event, the manufacturer's allowable variations in pressure temperature and speed are not to be exceeded, unless specifically agreed to before the test.

(2) Fluctuations would be indicated by scatter in the data (refer to para. 3-9.2).

(3) When steam is extracted for feedwater heaters, the extraction pressures (which are fixed by the turbine design and flow conditions) may deviate from expected values by a few percent. This normally has a negligible effect upon the overall performance. It shall be ascertained that such deviations that do exist are not due to malfunctioning of feedwater heaters. If large deviations persist, agreement must be reached as to the course to be followed.

(4) If it is not practicable to obtain design or rated exhaust pressure, the test may be conducted by agreement at another exhaust pressure, and either party may require that the exhaust pressure correction curve be verified by test.

Copyright ASME International
Provided by IHS under license with ASME
No reproduction or networking permitted without license from IHS
Not for Resale

ASME PTC 6-2004
(Revision of ASME PTC 6-1996)

Steam Turbines

Performance Test Codes

AN AMERICAN NATIONAL STANDARD



The American Society of
Mechanical Engineers

--`,,```,,,,````-`-`,,`,,`,`,,`---

Copyright ASME International
Provided by IHS under license with ASME
No reproduction or networking permitted without license from IHS

Not for Resale

ASME PTC 6-2004

(Revision of ASME PTC 6-1996)

Steam Turbines

Performance Test Codes

AN AMERICAN NATIONAL STANDARD

The American Society of Mechanical Engineers

Three Park Avenue • New York, NY 10016

Copyright ASME International
Provided by IHS under license with ASME
No reproduction or networking permitted without license from IHS

Not for Resale

Date of Issuance: October 31, 2005

This Code will be revised when the Society approves the issuance of a new edition. There will be no addenda issued to ASME PTC 6-2004.

ASME issues written replies to inquiries as code cases and interpretations of technical aspects of this document. Code cases and interpretations are published on the ASME Web site under the Committee Pages at http://www.asme.org/codes/ as they are issued.

ASME is the registered trademark of The American Society of Mechanical Engineers.

This code or standard was developed under procedures accredited as meeting the criteria for American National Standards. The Standards Committee that approved the code or standard was balanced to assure that individuals from competent and concerned interests have had an opportunity to participate. The proposed code or standard was made available for public review and comment that provides an opportunity for additional public input from industry, academia, regulatory agencies, and the public-at-large.

ASME does not "approve," "rate," or "endorse" any item, construction, proprietary device, or activity.

ASME does not take any position with respect to the validity of any patent rights asserted in connection with any items mentioned in this document, and does not undertake to insure anyone utilizing a standard against liability for infringement of any applicable letters patent, nor assumes any such liability. Users of a code or standard are expressly advised that determination of the validity of any such patent rights, and the risk of infringement of such rights, is entirely their own responsibility.

Participation by federal agency representative(s) or person(s) affiliated with industry is not to be interpreted as government or industry endorsement of this code or standard.

ASME accepts responsibility for only those interpretations of this document issued in accordance with the established ASME procedures and policies, which precludes the issuance of interpretations by individuals.

No part of this document may be reproduced in any form,
in an electronic retrieval system or otherwise,
without the prior written permission of the publisher.

The American Society of Mechanical Engineers
Three Park Avenue, New York, NY 10016-5990

Copyright © 2005 by
THE AMERICAN SOCIETY OF MECHANICAL ENGINEERS
All rights reserved
Printed in U.S.A.

Copyright ASME International
Provided by IHS under license with ASME
No reproduction or networking permitted without license from IHS

Not for Resale

CONTENTS

Notice vii
Foreword viii
Commitee Roster x
Correspondence With the PTC 6 Committee xii

Section 1 Object and Scope 1
1-1 Object 1
1-2 Scope 1
1-3 Full-Scale and Alternative Tests 1
1-4 Conformance to Code 2
1-5 Additional Requirements and References 2

Section 2 Definitions and Description of Terms 3
2-1 Symbols 3
2-2 Abbreviations 3
2-3 Subscripts 4
2-4 Definitions 6
2-5 Table for Conversion to SI Units 6

Section 3 Guiding Principles 7
3-1 Planning for Test 7
3-2 Items on Which Agreement Shall be Reached 7
3-3 Timing of Acceptance Test 8
3-4 General Test Requirements 9
3-5 Isolation of the Cycle 10
3-6 Location of Turbine Valve Points 11
3-7 Number of Test Runs 12
3-8 Testing Conditions 12
3-9 Frequency of Observations and Duration of Test Runs 14
3-10 Calibration of Instruments 15
3-11 Steam Pressure and Temperature Measurements 17
3-12 Corrections 17
3-13 Methods of Comparing Test Results 17
3-14 Tolerances 19

Section 4 Instruments and Methods of Measurement 20
4-1 General 20
4-2 Measurement of Mechanical Output 21
4-3 Measurement of Feedwater Pump Power 22
4-4 Measurement of Electrical Power 24
4-5 A-C Generator Test Instruments 27
4-6 D-C Generator Test Instruments 28
4-7 Calibration of Electrical Instruments 29
4-8 Primary Flow Measurement 29
4-9 Installation of Flow Section 38
4-10 Flow Characteristics 45
4-11 Other Flow-Measuring Devices 45
4-12 Measurement of Steam Flow 45
4-13 Measurement of Water Flow Using Tanks 45
4-14 Differential-Pressure Measurements 46
4-15 Enthalpy-Drop Method for Steam-Flow Determination 48

Copyright ASME International
Provided by IHS under license with ASME
No reproduction or networking permitted without license from IHS
Not for Resale

4-16 Additional Flow Measurements 49
4-17 Measurement of Pressure 51
4-18 Measurement of Temperature 57
4-19 Methods of Determining Steam Quality 59
4-20 Measurement of Speed 64
4-21 Measurement of Time 64
4-22 Measurement of Water Levels 64

Section 5 Computation of Results 65
5-1 Deviations From Specified Operating Conditions 65
5-2 Test Results 65
5-3 Test Data Reduction 65
5-4 Throttle-Steam Flow 66
5-5 Capability 66
5-6 Steam Rate 66
5-7 Heat Rate 66
5-8 Correction of the Test Results to Specified Conditions 67
5-9 Calculation of Turbine Exhaust Steam Enthalpy 67
5-10 Turbine Efficiency and Effectiveness 70
5-11 Calculation of Group 1 Corrections 71
5-12 Calculation of Group 2 Corrections 71
5-13 Average Performance 72

Section 6 Report of Tests 73
6-1 Turbine Generator Acceptance Test Reports 73

Section 7 Required Number of Readings 74
7-1 Introduction 74
7-2 Illustrations 74
7-3 Effect of Flow Nozzle Differentials 74
7-4 Effect of Throttle Steam Temperature 75
7-5 Combining Readings From More Than One Sensor or Instrument 76
7-6 Estimated Effect of all Readings for the Entire Test Period 76
7-7 Development of Fig. 3-1 76
7-8 Standard Deviation 76
7-9 Discussion on Fig. 7-1 76
7-10 Standard Deviation of the Averages 76
7-11 Uncertainty Limit 76
7-12 Formula for $N_R = \overline{N}_a$ Line in Fig. 3-1 80
7-13 Development of N_a Lines in Fig. 3-1 81

Section 8 Group 1 Corrections for the Alternative Procedure 82
8-1 Corrections to Specified Conditions 82
8-2 Cycle Parameters 82
8-3 Correction Factor Curves 82
8-4 Sample Group 1 Correction Curves for Fossil Units 82
8-5 Sample Group 1 Correction Curves for Nuclear Units 86

Section 9 Rationale for Heat Rate Testing Uncertainty 91
9-1 Object 91
9-2 Scope 91
9-3 Heat Rate Test 91
9-4 Measurement Errors 91
9-5 Variations 91
9-6 Uncertainty Values 91
9-7 Typical Test Uncertainty Calculations 91

Copyright ASME International
Provided by IHS under license with ASME
No reproduction or networking permitted without license from IHS
Not for Resale

Figures

2-1 Temperature-Entropy Diagrams 5
3-1 Required Number of Readings (N_R) Corresponding to 0.05% Effect on the Test Results Due to Scatter 16
3-2 Corrected First Stage Inlet (Bowl) Pressure vs. Corrected Throttle Flow for Use in Determining Predicted VWO Throttle Flow 18
3-3 Corrected Throttle Flow vs. Corrected Test Load for Use in Determining Predicted VWO Load 19
4-1 Typical Instrumentation for Measurement of Feedwater Pump Power 23
4-2(a) Wye Generator – 3-Phase, 3-Wire 25
4-2(b) Delta Generator – 3-Phase, 3-Wire 25
4-2(c) Wye Generator – 3-Phase, 4-Wire 25
4-2(d) Typical Connections for Measuring Electric Power Output by the Three-Wattmeter Method 26
4-2(e) Direct Current Series Generator 28
4-2(f) Direct Current Shunt Generator 29
4-2(g) Direct Current Short-Shunt Compound Generator 29
4-3(a) Primary Flow Section With Plate-Type Flow Straightener (Recommended) 30
4-3(b) Primary Flow Section With Tube-Type Flow Straightener 31
4-4 Throat-Tap Flow Nozzle 31
4-5 Perforated or Tubed Plate Flow Straightener With Nonuniform Hole Distribution 32
4-6 Throat-Tap Nozzle Required Surface Finish to Produce a Hydraulically Smooth Surface 33
4-7(a) Throat-Tap Nozzle With Optional Diffusing Cone 34
4-7(b) Boring in Flow Section Upstream of Nozzle 34
4-8 Primary Flow Section for Welded Assembly 35
4-9 Inspection Port Assembly 36
4-10 Reference Curve for Nozzle Calibration 37
4-11(a) Location and Type of Test Instrumentation (High-Pressure Feedwater Heater Supplied With Superheated Extraction Steam) 39
4-11(b) Location and Type of Test Instrumentation (Heater Drains Cascading to Condenser; Tracer Technique for Flow Measurement) 40
4-11(c) Location and Type of Test Instrumentation (Heater Drains Pumped Forward; Tracer Technique for Flow Measurement) 41
4-11(d) Location and Type of Test Instrumentation for Alternative Test Procedure – Fossil 42
4-11(e) Location and Type of Test Instrumentation for Alternative Test Procedure – Nuclear 43
4-12 Water Leg Correction for Flow Measurement 44
4-13 Flow Element Tap Locations for Horizontal Pipes 44
4-14(a) Connection Between Calibrated Flow Section and Transducer 46
4-14(b) Connection Between Calibrated Flow Section and Manometer 47
4-15 Connection Between Flow Section and Transducer in Area of High Radioactivity 48
4-16 Loop-Seal Piping Arrangement for Moisture Separator Drain Flow Measurements 49
4-17 Effect of HP-IP Leakage on Measured IP Efficiency 50
4-18 Connection Between Pressure Source and Transducer 52
4-19 Connection Between Pressure Source and Manometer Air-Filled Connection 54
4-20 Connection Between Pressure Source and Transducer/Water-Filled Connection 55
4-21 Basket Tip 56

Copyright ASME International
Provided by IHS under license with ASME
No reproduction or networking permitted without license from IHS
Not for Resale

4-22 Guide Plate 57
4-23 Throttle Steam Quality Calculations for Pressurized Water Reactor 61
4-24 Throttle Steam Quality Calculations for Boiling Water Reactor 62
4-25 Typical Installation of Injection and Sampling Points 63
4-26 Oxygen Content of Sample 63
5-1 Typical Saturated Steam Turbine Expansion Line 69
5-2 Components of Effectiveness 70
7-1 Standard Deviation Range vs. Sample Size 77
7-2 Slope of Superheated Steam Enthalpy at Constant Temperature 77
7-3 Slope of Superheated Steam Enthalpy at Constant Pressure 78
7-4 Slope of Saturated Liquid Enthalpy (Temperature) 78
7-5 Slope of Saturated Liquid Enthalpy (Pressure) 79
7-6 Typical Throttle Pressure Correction Curve 79
7-7 Typical Throttle Temperature Correction Curve 79
7-8 Typical Exhaust Pressure Correction Curve 80
8-1 Typical 320 MW Single-Stage Reheat Regenerative Cycle 83
8-2 Final Feedwater Temperature Correction 84
8-3 Auxiliary Extraction Correction (Extraction Downstream of Reheater) 84
8-4 Correction for Auxiliary Extraction From Cold Reheat 85
8-5 Corrections for Main Steam and Reheat Steam Desuperheating Flow 85
8-6 Condensate Subcooling Correction 86
8-7 Condenser Make-up Correction 86
8-8 Typical Light-Water Moderated Nuclear Cycle 88
8-9 Final Feedwater Temperature Correction for Nuclear Cycles 89
8-10 Auxiliary Turbine Extraction Correction for Nuclear Cycles 89
8-11 Condensate Subcooling Correction for Nuclear Cycles 90
8-12 Condensate Make-up Correction for Nuclear Cycles 90

Tables

3-1 Permissible Deviation of Variables 13
3-2 Definitions and Notes to Fig. 3-1 15
4-1 Hole Coordinates for Perforated or Tubed Plate 30
4-2 Reference Nozzle Coefficients of Discharge 37
8-1 Equations for Use in Curves for Group 1 Corrections 87
9-1 Example of a Full-Scale Test Uncertainty Calculation Fossil Condensate Primary Flow Measurement 92
9-2 Example of an Alternative Test Uncertainty Calculation Fossil Feedwater Primary Flow Measurement 93
9-3 Example of a Full-Scale Test Uncertainty Calculation Nuclear Condensate Primary Flow Measurement 93
9-4 Example of an Alternative Test Uncertainty Calculation Nuclear Feedwater Primary Flow Measurement 94

Nonmandatory Appendix

A References 95

Index 96

Copyright ASME International
Provided by IHS under license with ASME
No reproduction or networking permitted without license from IHS
Not for Resale

NOTICE

All Performance Test Codes must adhere to the requirements of ASME PTC 1, General Instructions. The following information is based on that document and included here for emphasis and the convenience of the Code user. It is expected that the Code user is fully cognizant of Sections 1 and 3 of ASME PTC 1 and has read them prior to applying this Code.

ASME Performance Test Codes provide test procedures that yield results of the highest level of accuracy consistent with the best engineering knowledge and practice currently available. They were developed by balanced committees representing all concerned interests and specify procedures, instrumentation, equipment-operating requirements, calculation methods, and uncertainty analysis.

When tests are run in accordance with a Code, the test results themselves, without adjustment for uncertainty, yield the best available indication of the actual performance of the tested equipment. ASME Performance Test Codes do not specify means to compare those results to contractual guarantees. Therefore, it is recommended that the parties to a commercial test agree before starting the test and preferably before signing the contract on the method to be used for comparing the test results to the contractual guarantees. It is beyond the scope of any Code to determine or interpret how such comparisons shall be made.

Copyright ASME International
Provided by IHS under license with ASME
No reproduction or networking permitted without license from IHS
Not for Resale

FOREWORD

HISTORICAL BACKGROUND

The Test Code for Steam Turbines was one of the group of ten codes forming the 1915 edition of the ASME Performance Test Codes. A revision of these codes was begun in 1918, and the Test Code for Steam Turbines was issued in revised form in April, 1928.

In 1932, a decision was reached to undertake a complete revision of the 1928 edition, and the Committee No. 6 was enlarged at the request of Chairman C. H. Berry. Two developments contributed to the making of this decision: first, the increased use of extraction, mixed-pressure, and other types of turbines favored their inclusion within the scope of the Steam Turbine Test Code; second, a broader concept of test codes resulted from international conferences.

The new concept arose in the following manner. In 1925, the U.S. National Committee of the International Electrotechnical Commission (IEC) invited the cooperation of the American Society of Mechanical Engineers in the preparation of an international test code for steam turbines. The invitation was referred to and accepted by the Performance Test Codes Committee. The IEC Secretariat for this project was assigned to the United States, and two international publications were issued, one dealing with specifications and the other covering rules for acceptance tests. Appendices to these international rules were agreed upon, and these appendices included the types of turbines that the ASME Performance Test Codes Committee added to the 1941 edition to its Test Code for Steam Turbines.

The broader concept of the content of test codes of this kind was gained in the course of this international activity. The new concept was discussed by the ASME Performance Test Codes Committee from time to time, and a revision of the Committee's model test code outline was adopted for guidance in the preparation of new codes and the revision of existing codes.

In 1949, a revision of the Code was undertaken because experience with the 1941 edition disclosed differences and ambiguities that required correction and clarification. This revision, approved and adopted by the Council of ASME, was published in January 1949 and designated as PTC 6-1949.

As a result of the evolution of the steam cycle, particularly with the increased application of reheat, consideration was given to revision of PTC 6-1949. Pressures and temperatures had increased, thermal cycles had become complex, and improved measuring techniques became available. In November 1956, Performance Test Codes Committee No. 6 was reorganized for the purpose of preparing a revised code reflecting the status of testing methods, instrumentation, and the current trend of thermal cycle development. A revised Code was published in 1964, and it was primarily concerned with the determination of the absolute level of performance. Much of the 1964 Code reflected the trend of thermal cycle development toward increasing throttle pressures and temperatures, the use of reheated steam, and advanced cycle arrangements.

An additional assignment was given the PTC 6 Committee as a result of a need that had developed over the years for simplified procedures for routine or commercial tests, including their relative accuracies. A thorough study of these problems resulted in two reports prepared by the Committee, PTC 6S and PTC 6 Report.

With the introduction of steam turbines operating predominantly within the moisture region in thermal cycles utilizing nuclear steam supply systems, additional techniques and instrumentation were necessary because of the moist steam that is typical in these applications. An interim Code, PTC 6.1-l 972, was developed and issued for trial use and comment and subsequently merged into PTC 6-1964, along with several desirable revisions, and reissued as PTC 6-1976.

Concurrent with the development of PTC 6-1976, work was underway by the International Electrotechnical Commission, Technical Committee No. 5 on Steam Turbines, to revise their Rules for Acceptance Tests to include procedures for testing turbines operating with dry and saturated

Copyright ASME International
Provided by IHS under license with ASME
No reproduction or networking permitted without license from IHS
Not for Resale

steam conditions. This effort resulted in the publication, in 1990, of documents IEC 953-1 and IEC 953-2, the former for high-accuracy testing of large condensing steam turbines and the latter for a wide range of accuracy testing of various types and sizes of turbines.

Several years after PTC 6-1976 was published, it became apparent to the Committee that the majority of steam turbines was not being tested because of the relatively high cost of a full-scale test using these procedures. The Committee investigated alternative testing techniques and developed an alternative procedure for acceptance testing, which meets the criteria of high accuracy but has a lower cost because it does not require all the measurements necessary for determining complete cycle information. These alternative procedures were issued as an Interim Code, PTC 6.1, in 1984 and included only the additional requirements and guidance to meet the objectives; it had to be used in conjunction with PTC 6-1976.

The 1996 revision of PTC 6 was undertaken to merge the Interim Code of 1984 into PTC 6-1976 and incorporate new high-accuracy instrumentation that has been developed since the publication of the 1976 Code.

This revised Code, designated "Performance Test Code 6 on Steam Turbines, PTC 6-1996" was approved by the Board on performance Test Codes, further approved as an American National Standard by the ANSI Board of Standards, and published by ASME on July 31, 1996.

CURRENT STATUS

Simplified test procedures of good relative accuracy, intended for periodic checks of turbine performance, are described in "Procedures for Routine Performance Tests of Steam Turbines," PTC 6S Report 1988 (Reaffirmed 1993), a separately published report by Performance Test Codes Committee No. 6. Such test procedures may be used throughout the service life of the turbine. They are not intended for acceptance tests and do not fulfill all the requirements of PTC 6-2004.

Tests using alternative instrumentation and procedures are described in "Guidance for Evaluation of Measurement Uncertainty in Performance Tests of Steam Turbines," PTC 6 Report 1985 (Reaffirmed 1991), a separately published report by Performance Test Codes Committee No. 6. Such test procedures do not fulfill the requirements of PTC 6-2004. They cannot be considered acceptance tests unless both parties to the test have mutually agreed, in writing, on all phases of the test that deviate from PTC 6-2004. Any deviation from Code procedure shall be distinctly described in the test report, along with the corresponding uncertainty as evaluated in accordance with PTC 6 Report 1985.

PTC 6 is most directly targeted for application to steam turbines in regenerative feedwater heater cycles. PTC 6.2, "Steam Turbines in Combined Cycles," a separately published code by Performance Test Codes Committee No. 6.2, addresses performance testing of steam turbines in combined cycle and cogeneration applications.

Many multi-pressure level combined cycle steam turbine bottoming cycles and cogeneration cycles present different challenges to performance testing from those faced in testing steam turbines in regenerative feedwater heater cycles. The different configurations make the testing of these bottoming and cogeneration cycles in accordance with PTC 6 impractical. PTC 6.2 is the recommended Code for testing steam turbines in combined cycle and cogeneration applications.

Due to the existence of numerous different steam turbine cycle configurations, including hybrids of combined cycles, regenerative feedwater heater cycles, and cogeneration cycles, it is not practical to define every cycle configuration for which PTC 6 is recommended and every cycle configuration for which PTC 6.2 is recommended. For cycle configurations not explicitly addressed by either Code, the Code Users are expected to apply the Code that most closely meets the test objectives. In these cases, the decision about which Code will be applied must be decided upon very early in test planning.

Since this Code was published, there have been several Technical Inquiries requesting clarification of selected Code paragraphs. In response to these Inquiries, the Committee changed Code language as necessary to clarify the intent of the Code. These changes, in addition to the correction of undetected errors, formed the basis for this revision.

This revision was approved by the Board on Performance Test Codes on April 22, 2004 and approved by the American National Standard Institute on December 6, 2004.

Copyright ASME International
Provided by IHS under license with ASME
No reproduction or networking permitted without license from IHS
Not for Resale

PERFORMANCE TEST CODE COMMITTEE 6 ON STEAM TURBINES

(The following is the roster of the Committee at the time of approval of this Code.)

OFFICERS

E. Brailey, Jr., *Chair*
A. J. Egli, *Vice Chair*
J. H. Karian, *Secretary*

COMMITTEE PERSONNEL

P. G. Albert, General Electric Co.
E. Brailey, Jr., Gerrnman Pederson, Inc.
T. M. Brown, Consultant
N. R. Deming, Consultant
A. J. Egli, Alstom Power
J. H. Karian, The American Society of Mechanical Engineers
D. C. Karg, Santee Cooper
J. S. Lamberson, Dresser-Rand Co.
R. W. Moll, *Alternate,* Dresser-Rand Co.
J. Nystrom, Alden Research Laboratory, Inc.
K. D. Stone, *Alternate,* General Electric Co.
L. M. E. Svensen, *Alternate,* Santee Cooper
E. J. Sundstrom, Dow Chemical USA
J. A. Zoller, Black & Veatch

Copyright ASME International
Provided by IHS under license with ASME
No reproduction or networking permitted without license from IHS
Not for Resale

BOARD ON PERFORMANCE TEST CODES

OFFICERS

J. G. Yost, *Chair*
J. R. Friedman, *Vice Chair*
S. Weinman, *Secretary*

BOARD PERSONNEL

P. G. Albert
R. P. Allen
J. M. Burns
W. C. Campbell
M. J. Dooley
A. J. Egli
J. R. Friedman
G. J. Gerber
P. M. Gerhart
T. C. Heil
R. A. Johnson
T. S. Jonas
D. R. Keyser
S. J. Korellis
M. P. McHale
P. M. McHale
J. W. Milton
G. H. Mittendorf, Jr.
S. P. Nuspl
A. L. Plumley
R. R. Priestley
J. A. Rabensteine
J. W. Siegmund
J. A. Silvaggio, Jr.
W. G. Steele, Jr.
J. C. Westcott
W. C. Wood
J. G. Yost

--`,,```,,,,````-`-`,,`,,`,`,,`---

Copyright ASME International
Provided by IHS under license with ASME
No reproduction or networking permitted without license from IHS

Not for Resale

CORRESPONDENCE WITH THE PTC 6 COMMITTEE

General. ASME Codes are developed and maintained with the intent to represent the consensus of concerned interests. As such, users of this Code may interact with the Committee by requesting interpretations, proposing revisions, and attending Committee meetings. Correspondence should be addressed to:

Secretary, PTC 6 Standards Committee
The American Society of Mechanical Engineers
Three Park Avenue
New York, NY 10016-5990

Proposing Revisions. Revisions are made periodically to the Code to incorporate changes which appear necessary or desirable, as demonstrated by the experience gained from the application of the Code. Approved revisions will be published periodically.

The Committee welcomes proposals for revisions to this Code. Such proposals should be as specific as possible, citing the paragraph number(s), the proposed wording, and a detailed description of the reasons for the proposal including any pertinent documentation.

Interpretations. Upon request, the PTC 6 Committee will render an interpretation of any requirement of the Code. Interpretations can only be rendered in response to a written request sent to the Secretary of the PTC 6 Standards Committee.

The request for interpretation should be clear and unambiguous. It is further recommended that the inquirer submit his request in the following format:

Subject:	Cite the applicable paragraph number(s) and a concise description.
Edition:	Cite the applicable edition of the Code for which the interpretation is being requested.
Question:	Phrase the question as a request for an interpretation of a specific requirement suitable for general understanding and use, not as a request for an approval of a proprietary design or situation. The inquirer may also include any plans or drawings, which are necessary to explain the question; however, they should not contain proprietary names or information.

Requests that are not in this format will be rewritten in this format by the Committee prior to being answered, which may inadvertently change the intent of the original request.

ASME procedures provide for reconsideration of any interpretation when or if additional information that might affect an interpretation is available. Further, persons aggrieved by an interpretation may appeal to the cognizant ASME Committee. ASME does not "approve," "certify," "rate," or "endorse" any item, construction, proprietary device, or activity.

Attending Committee Meetings. The PTC 6 Standards Committee holds meetings or telephone conferences, which are open to the public. Persons wishing to attend any meeting or telephone conference should contact the Secretary of the PTC 6 Standards Committee.

Copyright ASME International
Provided by IHS under license with ASME
No reproduction or networking permitted without license from IHS
Not for Resale

STEAM TURBINES

Section 1
Object and Scope

1-1 OBJECT

This Code provides procedures for the accurate testing of steam turbines. It is recommended for use in conducting acceptance tests of steam turbines and any other situation in which performance levels must be determined with minimum uncertainty. It is the intent of this Code that accurate instrumentation and best possible measurement techniques be used to determine the performance. In planning and running the test, the parties must strive to follow the Code procedures as closely as possible to achieve the lowest level of uncertainty.

1-2 SCOPE

This Code may be used for testing of steam turbines operating either with a significant amount of superheat in the initial steam (typically fossil-fueled units) or predominantly within the moisture region (typically nuclear-fueled units).

This Code contains rules and procedures for the conduct and reporting of steam turbine testing, including mandatory requirements for pretest arrangements, instruments to be employed, their application and methods of measurement, testing techniques, and methods of calculation of test results. The performance parameters which may be determined from a Code test include:

(a) heat rate
(b) generator output
(c) steam flow
(d) steam rate
(e) feedwater flow

It also contains procedures and techniques required to determine enthalpy values within the moisture region and modifications necessary to permit testing within the restrictions of radiological safety requirements in nuclear plants.

1-3 FULL-SCALE AND ALTERNATIVE TESTS

Two steam turbine testing procedures are presented. For either procedure, primary flow may be measured either in the condensate or feedwater line downstream of the final feedwater heater. The parties may agree to variations between the full-scale and alternative tests as long as the philosophy of minimum uncertainty is followed in detail.

1-3.1 Full-Scale Test

The full-scale test requires extensive thermal cycle measurements and calculations which provide detailed information about the turbine HP, IP, and LP individual component performance. A full-scale test will produce results with a minimum of uncertainty.

1-3.2

The full-scale test with condensate flow measurement is recommended for conducting acceptance tests of fossil unit steam turbines. Without prior written agreement between the parties to an acceptance test, this procedure shall be used.

1-3.3 Alternative Test

The alternative test relies on fewer measurements and makes greater use of correction curves for cycle adjustments and heater performance with resultant cost savings over the full-scale test. The test uncertainty is slightly increased compared with the full-scale test. For a nuclear unit, the alternative test with feedwater flow measurement may be preferred depending on the turbine cycle design. Use of this procedure requires agreement between the parties to an acceptance test.

1-3.4

The data from the alternative test procedure may produce a slightly higher uncertainty in results, particularly if there is substantial divergence between the test and specified cycle. The parties to the test must agree on a course of action if the turbine fails to meet specified performance. The alternative test may not provide the information necessary to determine individual component performance compared to expected, because only those measurements needed to calculate test heat rate and permit comparison to specific conditions are required. It is recommended that all provisions and source

--`,,```,,,,````-`-`,,`,,`,`,,`---

Copyright ASME International
Provided by IHS under license with ASME
No reproduction or networking permitted without license from IHS
Not for Resale

connections for a full-scale test be included in the design of the cycle, should such a test be required at a later time, and to facilitate individual turbine component performance testing.

1-4 CONFORMANCE TO CODE

1-4.1

Other procedures and instrumentation may be used only if they have demonstrated accuracy equivalent to that required by this Code. Only the relevant portion of this Code need apply to any individual case.

1-4.2

The tests should be conducted with the strictest possible adherence to the provisions of this Code. However, equipment limitations may dictate that the parties cannot comply with one or more Code requirements because of a conflict with another condition specified by the Code. In such cases, agreement between the parties is necessary. The agreement shall conform to the intent of the Code as closely as possible. The agreement should provide details for handling departures from specific Code requirements.

1-4.3

Any departure from Code requirements must be agreed upon in writing and conform to the intent of the Code. In the absence of written agreement, the Code requirements shall be mandatory.

1-4.4 Uncertainty of Code Test

The results of a full-scale Code test, expressed as a heat rate, for a typical fossil fuel reheat cycle unit have an uncertainty of about $1/4$% compared to an uncertainty of about $1/3$% for the alternative test. Test results for steam turbines operating predominantly within the moisture region have uncertainties of about $3/8$% and $1/2$%, respectively. Values of uncertainty will be affected by cycle configuration and equipment type and may be significantly higher. Section 9 discusses the rationale for heat rate uncertainty and demonstrates examples of uncertainty calculations in Tables 9-1–9-4.

1-4.5

A post-test uncertainty analysis performed according to procedures as described in PTC 19.1 is recommended. However, a post-test uncertainty analysis may be made optional upon agreement by the parties that a test adhered to all instrumentation requirements and procedures contained in this Code.

1-4.6

Code instrumentation and procedures may not always be economically feasible or physically possible for specific turbine acceptance tests. In these cases, the Code user should consider whether the cycle configuration is the primary reason for the infeasibility or impossibility of complying with PTC 6 and whether the cycle configuration is one for which PTC 6.2 is the more applicable Code. Alternatively, the Code user should consult PTC 6 Report for guidance in designing the test and calculating the test uncertainty.

1-5 ADDITIONAL REQUIREMENTS AND REFERENCES

1-5.1

The provisions of the Code on General Instructions, PTC 1, are a mandatory part of this Code. PTC 1 should be studied and followed in detail when preparing the procedure for testing a specific steam turbine.

1-5.2

The Code on Definitions and Values, PTC 2, defines certain technical terms and numerical constants which are used throughout this Code. Unless otherwise specified in this Code, instrumentation should comply with the appropriate sections of Supplements on Instruments and Apparatus, PTC 19 series.

1-5.3

An Appendix to this Code, PTC 6A, published separately, gives numerical examples of various calculations of test results.

Copyright ASME International
Provided by IHS under license with ASME
No reproduction or networking permitted without license from IHS
Not for Resale

Section 2
Definitions and Description of Terms

2-1 SYMBOLS

The following symbols are to be used unless otherwise defined in the text.

Symbol	Definition	Units	
		U.S Customary	SI
A	Area	$in.^2$	m^2
d	Primary element throat diameter	in.	m
D	Pipe internal diameter	in.	m
F	Force	lbf	N
g	Local value of acceleration due to gravity	ft/sec^2	m/s^2
g_o	Standard value of acceleration due to gravity = 32.174 05 ft per sec per sec (9.80665 meters per sec per sec). This is an internationally agreed upon value which is close to the mean at 45 deg N latitude at sea level	ft/sec^2	m/s^2
h	Enthalpy	Btu/lbm	kJ/kg
J	Mechanical equivalent heat, (1 Btu = 778.17 ft lbf = 1/3412.14 kWhr)	Btu	J
M	Moisture fraction = 1 − (x/100)	Ratio	Ratio
m	Mass	lbm	kg
N	Rotational speed	rpm	rad/s
P	Power	kW or hp	kW
p	Pressure	psia	kPa
s	Entropy	Btu/lbm°R	kJ/(kgK)
t	Temperature	°F (K)	°C[1]
T	Absolute temperature	°R	K
V	Velocity	ft/sec	m/s
υ	Specific volume	ft^3/lbm	m^3/kg
w	Rate of flow	lbm/hr	kg/s
x	Quality of steam	percent	percent
β	Beta ratio, d/D	Ratio	Ratio
η	Efficiency	percent	percent
ρ	Density	lbm/ft^3	kg/m^3
γ	Specific weight	lbf/ft^3	N/m^3

2-2 ABBREVIATIONS

Abbreviation	Term	Units	
		U.S. Customary	SI
HR	Heat rate	Btu/kWhr	J/J
		Btu/hp-hr	kJ/kWh[1]
SR	Steam rate	lbm/kWhr	kg/kJ
		lbm/hp-hr	kg/kWh[1]

NOTE:

(1) Tolerated non-SI Unit.

Copyright ASME International
Provided by IHS under license with ASME
No reproduction or networking permitted without license from IHS
Not for Resale

2-3 SUBSCRIPTS

g	Generator
r	Rated condition
c	Corrected
s	Specified operating condition, if other than rated
t	Test operating condition
1	Condition measured at a point directly preceding the turbine stop valves and steam strainers, if furnished under the turbine contract
2	For turbines using superheated steam: condition at turbine outlet connection leading to the first reheater. For turbines using predominantly wet steam: condition at turbine outlet connection leading to external moisture separator.
3	For turbines using superheated steam: condition downstream of the first reheater, measured at a point directly preceding the reheat stop valves, intercept valves, or steam dump valves, whichever are first, if furnished under the turbine contract.[1] For turbines using predominantly wet steam: condition at external moisture separator outlet.
4	For turbines using superheated steam: condition at turbine outlet connection leading to the second reheater. For reheat turbines using predominantly wet steam: condition downstream of the reheater, measured at a point directly preceding the reheat-stop valves, intercept valves, or steam dump valves, whichever are first, if furnished under the turbine contract.[1]
5	For turbines using superheated steam and two stages of reheat: condition downstream of the second reheater, measured at a point directly preceding the reheat stop valves, intercept valves, or steam dump valves, whichever are first, if furnished under the turbine contract[1]
6	Condition at turbine exhaust connection
7	Condition at condenser-condensate discharge
8	Condition at condensate pump discharge
9	Condition at feedwater pump or feedwater booster pump inlet
10	Condition at feedwater pump discharge
11	Condition at the discharge of the final feedwater heater
*a*1	Superheater desuperheating water
*a*2	First reheater desuperheating water
*a*3	Second reheater desuperheating water
*c*1	Condenser circulating water leakage
E	Extraction steam
e	Make-up water admitted to the condensate system
*p*1	Packing leak-off (shaft or valve stems)
i,ii, . . . n	Sequence

The temperature-entropy diagrams shown in Fig. 2-1(a) through (c) are intended to serve as a key to the numerical subscripts employed in the foregoing.

[1] It may be necessary to correct for pressure drop in piping between reheat or low-pressure stop valves, intercept valves, steam dump valves, and turbine shell if such piping is not furnished under the turbine contract.

--`,,```,,,,````-`-`,,`,,`,`,,`---

Copyright ASME International
Provided by IHS under license with ASME
No reproduction or networking permitted without license from IHS Not for Resale

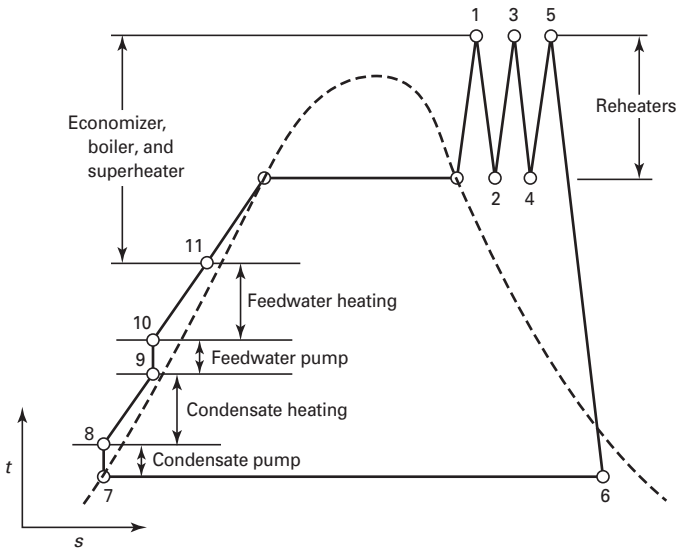

(a) Turbines Operating Predominantly in the Superheated Steam Region

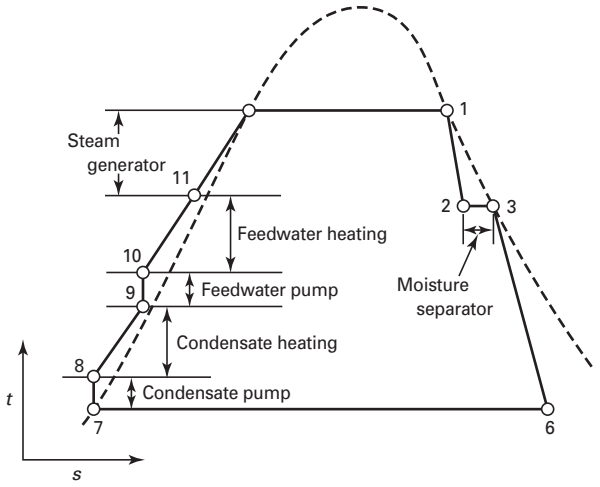

(b) Temperature-Entropy Diagram Without Reheat

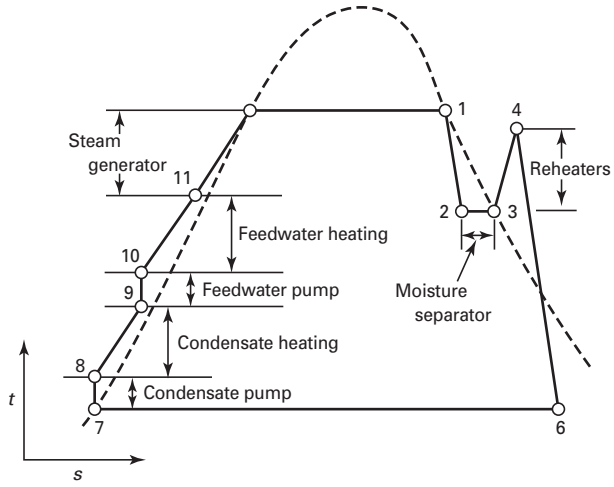

(c) Temperature-Entropy Diagram With Reheat

(b and c) Turbines Operating Predominantly in the Wet-Steam Region

Fig. 2-1 Temperature-Entropy Diagrams

Copyright ASME International
Provided by IHS under license with ASME
No reproduction or networking permitted without license from IHS
Not for Resale

2-4 DEFINITIONS

This section defines various terms used in this Standard.

Term	Definition	Units	
		U.S Customary	SI
Steam rate	Steam consumption per hour per unit output in which the turbine is charged with the steam quantity supplied.	lbm/kWhr lbm/hp-hr	kg/kJ kg/kWh [Note (1)] kg/kJ kg/kWh [Note (1)]
Heat rate	Heat consumption per hour per unit output. The turbine is charged with the aggregate enthalpy[1] of the steam supplied plus any chargeable aggregate enthalpy added by the reheaters. It is credited with the aggregate enthalpy of feedwater returned from the cycle to the steam generator. Turbine-generator performance may be defined on the basis of the gross power output at the generator terminals less the power used by the minimum electrically driven turbine auxiliaries and excitation equipment, supplied as part of the turbine-generator unit, required for reliable and continous operation.	Btu/kWhr Btu/hp-hr	J/J kJ/kWh [Note (1)] J/J kJ/kWh [Note (1)]
Valve-loop curve	The continuous curve of actual heat rate for all values of output over the operating range of the unit.		
Mean of the valve loops	A smooth curve that gives the same load-weighted average performance as the valve-loop curve.		
Valves Wide Open (VWO)	Maximum control valve opening obtainable under normal turbine control system operation.		
Valve points	Those valve positions which correspond to the low points of the valve-loop curve.		
Locus curve	The continuous curve connecting the valve points.		
Power	The useful energy, per unit of time, delivered by the turbine or turbine-generator unit.	hp-hr/hr or kWhr/hr	

NOTE:
(1) Aggregate enthalpy: Product of enthalpy, Btu/lbm (kJ/kg) and rate of flow, lbm/hr (kg/h); Btu/hr (kJ/h).

2-5 TABLE FOR CONVERSION TO SI UNITS

Quantity	SI Units	Conversion Factor
Heat rate	J/J	$2.9307 \times 10^{-4} \times$ (Btu/kWhr)
	kJ/kWh[1]	$1.05506 \times$ (Btu/kWhr)
Steam rate	kg/kJ	$1.260 \times 10^{-4} \times$ (lbm/kWhr)
	kg/kWh[1]	$0.4536 \times$ (lbm/(kWhr))
Mass flow	kg/s	$1.260 \times 10^{-4} \times$ (lbm/hr)
Pressure	kPa	$6.8948 \times$ (psi)
	bar[1]	$0.068948 \times$ (psi)
Temperature	K	(°F + 459.67)/1.8
	°C[1]	(°F − 32)/1.8
Differential temperature	K	°F/1.8
Density	kg/m^3	$16.018 \times$ (lbm/ft^3)
Enthalpy	kJ/kg	$2.3260 \times$ (Btu/lbm)
Entropy	kJ/(kgK)	$4.1868 \times$ (Btu/lbm°R)
Specific heat	kJ/(kgK)	$4.1868 \times$ (Btu/lbm°R)
Length	m	$0.3048 \times$ (ft)
Area	m^2	$0.92903 \times$ (ft^2)
Volume	m^3	$0.028317 \times$ (ft^3)
Velocity	m/s	$0.3048 \times$ (ft/sec)

NOTE:
(1) For temperature differentials, "K" must be used.

Copyright ASME International
Provided by IHS under license with ASME
No reproduction or networking permitted without license from IHS
Not for Resale

Section 3
Guiding Principles

3-1 PLANNING FOR TEST

3-1.1 Requirements for Agreements

The parties to any test under this Code shall reach definite agreement on the specific objective of the test and method of operation. This agreement shall reflect the intent of any applicable contract or specification. Any specified or contract operating conditions or specified performance pertinent to the objective of the test shall be ascertained. Unless the alternative test procedures are specified, full-scale test procedures shall be used. Omissions or ambiguities about any of the conditions must be eliminated or their values or intent agreed upon before the test is started. The cycle arrangement, operating conditions, and testing procedures shall be established during the agreement on test methods.

3-2 ITEMS ON WHICH AGREEMENT SHALL BE REACHED

3-2.1 Agreement During Engineering Phase

The following is a list of typical items upon which agreement shall be reached during the engineering phase of a new unit or modification of an existing unit.

(a) objective of test and methods of operation.

(b) the intent of any contract or specifications as to use of the alternative test procedure, which must include a review of specified heat cycle and final expected values (refer to para. 3-4.1).

(c) the intent of any contract or specifications as to timing of test, operating conditions, and guarantees, including definitions of heat rate, method of comparing test results with guarantee, and responsibility for the preparation of test report(s).

(d) location of, and piping arrangement around, primary flow measuring device(s) on which test calculations are to be based (see paras. 4-9.1 through 4-9.7).

(e) location and type of secondary flow measuring devices and provisions for calibration, including temporary piping for in-place calibration, if required.

(f) number and location of valves or other means required to ensure that no unaccounted-for flow enters or leaves the test cycle or bypasses any cycle component (In a nuclear plant, particular note must be taken of make-up lines and emergency valving that may not be blocked off and for which accounting must be made. (see para. 3-5.8).

(g) method of handling leakage flows, orifice continuous drain flows, continuous blowdowns, etc. to avoid complications in testing or the introduction of errors.

(h) method of complying with the criteria and recommendation of ASME Standard No. TDP-1, Parts 1 and 2, "Recommended Practices for the Prevention of Water Damage to Steam Turbines Used for Electric Power Generation," as related to handling of, or accounting for, drain flows.

(i) means of measuring pump-shaft seal and leakage flows.

(j) number and location of temperature wells and pressure connections.

(k) number and location of duplicate instrument connections required to ensure correct measurements at critical points.

(l) calibration and connection of instrument transformers to be used for measuring electrical output.

(m) where a plant computer is used for data acquisition, provisions for total-system, in-place calibration of station instrumentation and computer (Calibration should include comparison of known inputs to the output of the computer).

(n) method of determining the differential pressure across control valve(s) to satisfy the provisions of paras. 3-13.2 and 3-13.4 (Pressure tap should be provided immediately upstream and downstream of the last control valve(s) to open).

(o) method of determining steam quality, including sampling technique as required (The recommended methods are tracer, heater-drain flow measurements, and calorimeter method).

(p) responsibility for obtaining a license for radioactive tracer and method of shipping, receiving, handling, storing, and using both the tracer and its associated equipment.

(q) level of undue deterioration at which the acceptance test will be postponed until after the first internal inspection.

(r) method of establishing the efficiency of the feedwater pump turbine, if required.

(s) criteria for instrument recalibration after the test.

3-2.2 Agreement Prior to Test

The following is a list of typical items upon which agreement shall be reached prior to conducting the test.

--`,,```,,,,````-`-`,,`,,`,`,,`---

Copyright ASME International
Provided by IHS under license with ASME
No reproduction or networking permitted without license from IHS Not for Resale

(a) procedure for determining the condition of the turbine prior to the test (see paras. 3-3.1, 3-3.2, and 3-4.5)

(b) location, type, and calibration of instruments (see para. 3-10.1)

(c) methods of measurement not established in (b)

(d) isolation of cycle during test (see Subsection 3.5)

(e) method of detecting excessive feedwater-heater leakage (see para. 4-16.6)

(f) means for maintaining constant test conditions (see paras. 3-8.1 and 3-8.2)

(g) method of isolating or arresting control valve action, such as those caused by variations in combustion-control systems signal, electrical system, etc.

(h) operating conditions at which tests are to be conducted, including, but not limited to, the loads, valve settings, or valve points to be used for each run (see paras. 3-8.3 and 3-13)

(i) position of manually and automatically operated valves (see para. 3-8.9)

(j) frequency of observations (see para. 3-9.2)

(k) number of test runs at the same test point (see paras. 3-7.1 and 3-7.2) (I, duration of test runs) (see para. 3-9.2)

(l) duration of operation at test load before readings are commenced (see para. 3-8.1)

(m) computer or data acquisition system to be used for test data acquisition and analysis

(n) arrangements for data acquisition and analysis, including calibration of data acquisition system

(o) procedures and format for recording data

(p) organization and training of test personnel and identification of the responsibility for the test (see paras. 3-4.2, 3-4.3, and 3-4.5)

(q) procedures for calculating test results

(r) curves to correct for measured generator output for deviations from specified power factor and hydrogen pressure

(s) corrections for deviation of test steam conditions from those specified (see para. 3-12)

(t) curves to correct test heat rate to specified cycle conditions (alternative test only)

(u) method of conducting test runs to determine the value of any correction factors (see paras. 3-4.5 and 3-12)

(v) method of handling deviations beyond the stated permissible levels as a result of a mismatch between test timing and seasonal effects on operating conditions

(w) where a nuclear unit is involved, all test plans must reflect compliance with the technical specification for that unit

(x) load limitations caused by licensing considerations (nuclear steam-supply limitations or otherwise) which prevent attainment of full power within a practical time period

(y) deviations from test arrangements and procedures that may be required due to a radioactive environment in the testing area

3-3 TIMING OF ACCEPTANCE TEST

3-3.1 Scheduling of Acceptance Test

The acceptance test should be scheduled as soon as practicable, preferably within eight weeks, after the turbine is first loaded. This allows for detailed planning, material procurement, instrument acquisition, preparation, shipment, controls adjustment, preliminary tests, and detection and correction of problems with the unit.

The tests should be conducted if no serious operating difficulty has been experienced and there is reasonable assurance the unit is free of deposits and undamaged.

It is the intent during this period to minimize performance deterioration and risk of damage to the turbine. Enthalpy drop tests or preliminary tests should be made during this period to monitor the performance of turbine sections operating entirely in the superheat region. However, enthalpy drop tests do not provide performance for turbine sections with a wet exhaust. Therefore, it is imperative to conduct the acceptance test as soon as possible.

In any event, if the enthalpy drop tests show undue deterioration, or if plant conditions delay the tests for more than four months after initial operation, the acceptance test should be postponed until immediately following the first internal inspection, provided that any deficiencies in the turbine generator affecting performance have been corrected during the inspection period. Except with written agreement to the contrary, the acceptance test shall take place within the warranty period specified in the contract. Adjusting of heat rate test results to start-up enthalpy drop efficiencies or for the effects of aging is not permitted by this Code.

In lieu of an internal inspection, the following methods may be used prior to the acceptance test to establish the approximate condition of the turbine.

(a) For turbines using superheated steam, a comparison between enthalpy-drop efficiency tests conducted immediately after the start-up and again immediately before the test (see para. 3-3.2).

(b) By Running Preliminary Tests. For turbines operating predominantly in the moisture region, this may be the only applicable method.

(c) By a Combination of These Methods. If the turbine is shut down prior to the test, an inspection of all accessible parts is desirable. The parties to the test must agree as to the action to be taken on evidence of deterioration.

3-3.2 Performance Benchmark Determinations

It is desirable that a performance benchmark be established immediately after the turbine is first placed in service, so that, should the Code test be delayed past eight weeks, there can be reasonable assurance that the turbine has not been damaged or become fouled with deposits during the intervening period of operation (see

Copyright ASME International
Provided by IHS under license with ASME
No reproduction or networking permitted without license from IHS
Not for Resale

para. 3-3.1). For turbines operating in the superheated steam region, the internal efficiency (actual enthalpy drop divided by the isentropic drop) of each turbine element should be determined by measurement of the pressure and temperature of the steam entering and leaving the section. These measurements should be made with all control valves fully open. The instrumentation to be used for the benchmark testing shall meet the same accuracy and calibration requirements specified for Code test measurements.

Unlike the intermediate-pressure turbine section, for which efficiency is substantially constant over a wide range of steam flow, the efficiency of the high pressure section is affected by the position of the control valves. If it is not possible to bring the turbine up to full load immediately after initial start-up, the internal efficiency test should be made by reducing the throttle steam pressure sufficiently to permit operation with fully open control valves without exceeding limitations on output. The internal efficiencies of all turbine sections measured under these conditions will then be compared with tests run with design steam pressures and fully open control valves. Steam pressure and temperature measurements (or test data) should be supplemented with output measurements to provide data on the low-pressure section of the turbine. With some stages operating in the wet-steam region, the low pressure section cannot be checked by internal efficiency measurements.

When a turbine has wet steam exhausting from all sections (such as a turbine with a nuclear steam supply), it is not possible to use an enthalpy-drop efficiency test to establish benchmark performance. If a preliminary heat rate test can be performed, this would be an excellent method to establish benchmark performance. If this is not practical, however, it is recommended that a "capacity" test be conducted at the licensed thermal output of the nuclear steam supply system. In a capacity test, cycle conditions are stabilized, and electrical output of the generator is carefully measured, together with all cycle conditions which affect performance, such as initial and condenser pressure. Generator output is corrected for differences in cycle conditions from their nominal values using appropriate correction factor curves. It is also corrected for any difference between measured and licensed reactor thermal output, assuming electrical output is proportional to reactor thermal output. This corrected electrical can then be used as a benchmark, since it can be compared to an electrical output derived in exactly the same way at the time of the test. The accuracy of this procedure depends upon the repeatability of electrical and reactor thermal output. Since this capacity test is performed with a measured heat input, it is analogous to a simplified heat rate test; therefore, it is necessary to isolate the cycle to achieve an accurate determination of any deterioration.

3-4 GENERAL TEST REQUIREMENTS

3-4.1

Various methods are presented in the Code for conducting certain details of the test and computing the results. The test report shall state which alternatives have been employed (see Section 6). Since the alternative method requires fewer measurements, it is important that cycle components operate close to specified conditions. If not, appropriate corrections must be developed reflecting test conditions to minimize the uncertainty.

3-4.2

The parties to the test may designate a person to direct the test and serve as mediator in event of disputes as to the accuracy of observations, conditions, or methods of operation.

3-4.3

Designated representatives of the parties to the test shall be present to verify that the test is conducted in accordance with this Code and the arrangements made prior to the test.

3-4.4

Provisions shall be made for all precautions specified in Section 4 for respective measurements.

Provisions for cycle isolation shall be made in accordance with para. 3-5.

3-4.5

Preliminary tests may be run for the purpose of

(a) determining whether the turbine and plant are in a suitable condition for the conduct of the test (see paras. 3-3.1 and 3-3.2)

(b) checking all instruments

(c) training personnel

(d) establishing valve points

(e) determining corrections for deviation of conditions from specified

(f) confirming cycle isolation

3-4.6 Test Data

Unless an agreement is reached to the contrary, records shall be kept of all test data before the application of any calibration factors, corrections, conversions, or statistical analysis. A copy of the original records shall become the property of each of the principal parties to the test. No original data may be erased or deleted.

Copyright ASME International
Provided by IHS under license with ASME
No reproduction or networking permitted without license from IHS Not for Resale

3-5 ISOLATION OF THE CYCLE

3-5.1 General

The accuracy of the test results depends on the isolation of the system. Cycle isolation is equally important to both the full-scale and alternative procedures. Extraneous flows should be isolated, if possible, to eliminate errors. Extraneous flows for equipment that is included in the contract cycle should be isolated only with mutual agreement by the parties. If there is any doubt about the ability to isolate extraneous flows during the test, preparations shall be made prior to the test to measure the flows.

3-5.2 Equipment and Flows

The equipment and flows to be isolated and method to accomplish this should be outlined well ahead of the initial operation date of the turbine.

3-5.3 External Isolation

External isolation deals with flows which enter or leave the turbine cycle, such as condensate make-up or boiler blowdown flow. This system isolation shall be effected so that the difference between the sums of the measured storage changes and entering and leaving flows (the unaccounted-for leakage) is minimized. The unaccounted-for leakage shall not exceed 0.1% of the test throttle flow at full load. Excessive unaccounted-for leakages shall be eliminated before continuing the test. Water storage in the condenser, deaerating and other extraction feedwater heaters, steam generator drum(s), moisture separators, and any other storage points within the cycle are to be taken into account.

3-5.4 Internal Isolation

Internal isolation deals with flows which do not enter or leave the turbine cycle but may bypass the component they were designed to go through. Examples of such flows are steam line drain flows to the condenser or feedwater heater bypass flows. Internal isolation cannot be verified by the inventory summation method discussed above. The isolation procedure given in paras. 3-5.6 and 3-5.8 must be followed to verify internal isolation.

3-5.5 Flows That Shall be Isolated

The following list includes items of equipment and extraneous flows that shall be isolated:

(a) large-volume storage tanks not directly in the cycle.

(b) evaporators and allied equipment, such as evaporator condenser and preheaters.

(c) bypass systems and auxiliary steam lines for starting.

(d) bypass lines for primary flow measuring devices.

(e) turbine sprays.

(f) drain lines on stop, intercept, and control valves.

(g) drain lines on main steam, cold reheat, hot reheat, and extraction steam piping.

(h) interconnecting lines to other units.

(i) demineralizing equipment. Isolation of demineralizing equipment does not necessarily mean removing the equipment from the cycle (It does, however, mean that all ties with other units must be isolated and such components as recirculating lines that affect the primary flow measurement must be isolated or the flows measured).

(j) chemical feed equipment using condensate.

(k) steam generator fill lines.

(l) steam generator vents.

(m) steam-operated soot blowers.

(n) condensate and feedwater flow bypassing heaters.

(o) heater drain bypasses.

(p) heater shell drains.

(q) heater water-box vents.

(r) hogging jets.

(s) condenser water-box priming vents.

(t) steam or water lines for station heating.

(u) steam or water lines installed for water washing the turbine.

3-5.6 Flows That Shall be Isolated or Measured

Extraneous flows which enter or leave the cycle or bypass a component in such a manner that if ignored will cause an error in the flows through the turbine shall be isolated or measured. Typical of such flows are

(a) boiler-fire-door cooling and boiler-slag-tap cooling-coil flows.

(b) sealing and gland cooling flow on the following (both supply and return):

(1) condensate pumps

(2) feedwater pumps

(3) boiler or reactor-water circulating pumps

(4) heater drain pumps when not self sealed

(5) turbines for turbine-driven pumps

(6) reactor control-rod drive flows

(c) desuperheating water flow.

(d) feedwater pump minimum-flow lines and balance drum flow when the piping is arranged to allow recirculation of the flow through the primary flow element.

(e) steam for fuel oil atomization and heating.

(f) steam generator blowdowns.

(g) turbine water-seal flows.

(h) desuperheating water for turbine cooling steam.

(i) emergency blowdown valve or turbine-packing leakage and sealing steam.

(j) turbine water-seal overflows.

(k) steam, other than packing leakage steam, to the steam-seal regulating valve.

(l) make-up water, if necessary.

--`,,```,,,,````-`-`,,`,,`,`,,`---
Copyright ASME International
Provided by IHS under license with ASME
No reproduction or networking permitted without license from IHS
Not for Resale

(m) pegging or sparging steam (such as higher stage extraction at low loads) for low-pressure operation of deaerator.

(n) heater shell vents are to be closed, if possible, and if not possible, shall be throttled to a minimum.

(o) deaerator overflow line.

(p) deaerator vents shall be throttled to a minimum.

(q) water leakage into any water-sealed flanges, such as water-sealed vacuum breakers.

(r) pump-seal leakage leaving the system.

(s) automatic extraction steam for industrial use.

(t) continuous drains from wet-steam turbine casings and connection lines.

(u) subcooled moisture used for moisture separator reheater coil-drain cooling.

(v) reactor core spray.

(w) heater-blanketing steam lines.

(x) water and steam sampling equipment. If it is impossible to isolate water and steam sampling equipment and if the sampling flow is significant, it shall be measured.

(y) steam to air preheaters.

3-5.7

For the full-scale test, when it is impossible to measure shaft packing leakage, valve-stem leakage, internal turbine leakage, and turbine drain flows, it will be necessary to use calculated values. For the alternative procedure, calculated values may be used in lieu of measured values.

3-5.8 Methods of Isolating

The following methods are suggested for isolating or verifying isolation of miscellaneous equipment and extraneous flows from the primary feedwater cycle:

(a) use of double valves and telltales

(b) use of blank flanges

(c) use of blank between two flanges

(d) removal of spool piece for visual inspection

(e) visual inspection for steam blowing to atmosphere from such sources as safety valves and valve-stem packings

(f) use of a closed valve that is known to be leak proof (test witnessed by both parties) and not operated prior to or during test

(g) tracer indicator of presence of leakage

(h) for steam lines terminating at the condenser, pipe surface temperature indication

(i) for bypass lines around feedwater heaters, temperature measurement of condensate/feedwater before and after the bypass lines tee into the condensate/feedwater lines

(j) temperature measurement for situations other than described in (h) and (i) (acceptable only under certain conditions with mutual agreement necessary)

(k) acoustic techniques, with mutual agreement

3-6 LOCATION OF TURBINE VALVE POINTS

3-6.1

The method used to establish turbine valve points depends on valve point definition. A valve point may be established in terms of high-pressure turbine efficiency, certain measured turbine pressures, or valve-stem positions. The turbine is then tested accordingly.

3-6.2

For units with a high-pressure section operating entirely in the superheat region, a valve point may be located by finding a point of local maximum high-pressure section efficiency. To do this, the flow to the unit is changed in small increments throughout a range, which includes the valve point. At each flow increment, pressure and temperature measurements are taken at both inlet and exhaust so that high-pressure section efficiency can be derived. A local maximum efficiency will be evident, provided suitable instruments and test procedures have been used. During testing, a parameter that varies with flow (such as control valve position(s) or pressure ratio across either the first stage or complete high-pressure section) should also be recorded so the valve point can be readily set during the test series.

3-6.3

A valve point established in terms of pressures is found by measuring pressure at a tap provided for each steam admission zone served by a valve. While the valve remains closed, the pressure in this zone will be nearly the same as the first stage pressure of the turbine. As the valve opens, the difference between these two pressures will gradually change, and the zone pressure will rise above the first stage pressure.

3-6.4

A valve point established in terms of valve stem position is found by taking the appropriate measurements during operation.

3-6.5

If valve points are located prior to the start of the test series, time and labor can be saved during the tests.

3-6.6

Valve points are numbered consecutively from the minimum arc of admission. For example, consider a machine with four control valves designed such that the first two valves open together. The first valve point occurs where the third valve is about to open, and the second valve point occurs where the fourth valve is about to open.

Copyright ASME International
Provided by IHS under license with ASME
No reproduction or networking permitted without license from IHS Not for Resale

3-7 NUMBER OF TEST RUNS

3-7.1 Recommended Test

As a minimum, duplicate test runs should be performed at valves-wide open and two part load points. Duplicate test runs at the same operating condition reduce the random error component of uncertainty. The part load tests should be performed at valve points to ensure that duplicate test runs are at the same conditions. The test series should begin and end with the same valve point test run, preferably the valves-wide-open test run.

Consecutive tests should not be performed at the same load without changing valve positions and breaking isolation. It may be necessary to break isolation to maintain hotwell level during the load change. Load change should be at least to the next higher, or lower, valve point, or, for full-arc admission turbines, at least 15% of load.

The criteria of para. 3-7.2 are to verify that operating conditions during duplicate test runs are correct, provided that changes in load and isolation are made between these duplicate runs. If the criteria are not met, according to PTC 1-2004, para. 3-10.2, the parties to the test may eliminate the test runs by mutual agreement. The criteria are to verify correct operating conditions and not to determine statistical outliers.

The heat rate differences used are based on experience and do not relate directly to uncertainties in Tables 9-1 through 9-4.

3-7.2 Duplicate Test Runs

The requirements of this Code for agreement between the results of duplicate test runs are illustrated by several hypothetical sequences of test results in examples (a) through (g) below. When two test runs are conducted at the same test point, the corrected test heat rates shall agree within 0.25%. Thus, neither test differs from the average by more than one-half this amount or 0.125%. Units for the heat rates in the following are Btu/kWhr.

(a) 2 test runs within 0.25%
8009
7991
use average = 8000

If the two test runs differ by more than 0.25%, additional test runs are required at the same test point until the corrected heat rates of at least two test runs agree within the 0.25%. If more than one pair of test runs meets the 0.25% criterion, then the pair that most closely falls on the locus curve of the corrected test heat rates from other test points shall be accepted. Alternatively, another test run may be made.

(b) 3 test runs with third outside range of other two
8010 > 0.25% from nearest one
7988
7980
use average of last two = 7984

(c) 3 test runs agree with third test run between other two
8015
7985 > 0.25% from first one
8000
use average from third test (8000) in a pair that best fits locus curve

(d) 3 test runs with third test run between other two, followed by a fourth test run
8011 > 0.25% from nearest one
7979
7988
7983
use average of last three = 7983

If no two corrected heat rates fall within 0.25% of each other after three test runs have been made at the same test point, the test procedure and instrumentation must be carefully reviewed to determine and correct the cause before proceeding to run more test runs.

(e) 3 test runs with no pair within 0.25%
8021
8000
7979
find cause before proceeding

At any one test point, all corrected test heat rates falling within 0.125% of their average shall be accepted.

(f) 4 tests with close grouping
8010
8005
8012
8000
use average of all four = 8007, since each is within 0.125% of their average.

3-8 TESTING CONDITIONS

3-8.1 Constancy of Test Conditions

Preparatory to any test run, the turbine and all associated equipment shall be operated for a sufficient time to attain steady-state condition. Steady-state conditions shall have been attained when the criteria of para. 3-8.3 are met.

When a tracer is used for determining steam quality, the injection period should commence sufficiently prior to the start of the test run to attain equilibrium. As a guide, it may be conservatively expected that equilibrium is attained when a time period, equal to twice the calculated transit time through the longest injection line plus the longest sample line following the commencement of injection, has passed. For the purpose of this Code, equilibrium shall have been attained when the concentration of tracer in two consecutive samples taken during the test at a 30 minute interval differ by no more than 3% from one another.

3-8.2

Appropriate means shall be employed for securing constant load. This may be accomplished by blocking

Copyright ASME International
Provided by IHS under license with ASME
No reproduction or networking permitted without license from IHS
Not for Resale

the valve-gear or control valve travel in the opening direction at the desired load, leaving the control valves free to move in the closing direction in the event of upsets or emergency situations. While the machine is so operating, it will be unable to carry more load than that for which the valve-gear or control valves are blocked but will regulate the turbine at a slightly higher speed in the event of loss of load.

3-8.3 Operating Conditions

Every effort shall be made to run the tests under specified operating conditions, or as close to specified operating conditions as possible in order to avoid the application of corrections to test results, or minimize the magnitude of the corrections. In addition, variations in any condition that may influence the results of the test shall be made as nearly constant as practicable before the test begins and so maintained throughout the test. Steam generator and turbine controls shall be fine-tuned prior to the test to minimize deviation of variables. Table 3-1 lists the permissible deviation of variables prescribed with the exceptions as noted in para. 3-8.11. A slow change in variables, or "drift," during the test run will frequently occur in addition to the fluctuations addressed in Table 3-1. For some key parameters, "drift" should be limited to 50% of the permissible deviations presented in Table 3-1 for the average of the test conditions from design or rated conditions. These key parameters are initial steam pressure, initial and reheat steam temperature, exhaust pressure, output, and speed. Operating within the limits of Table 3-1 is especially important for the alternative test, since more correction curves are used than in the full-scale test.

3-8.4

Hydrogen purity should be maximized to decrease windage loss, and improve heat transfer for safety reasons. Operating manuals specify a minimum hydrogen

Table 3-1 Permissible Deviation of Variables

Variable	Permissible Deviation for the Average of the Test Conditions from Design or Rated Conditions [Note (1)]	Permissible Fluctuations During Any Test Run [Note (2)]
Initial steam pressure	±30% of the absolute pressure	±0.25% of the absolute pressure or 5.0 psi (34.5 kPa), whichever is larger
Initial and reheat steam temperature	±15°F (8K) when superheat is 27°–50°F (15–30K); ±30°F (16K) when superheat is in excess of 50°F (30K)	±4°F (2K) when superheat is 27°–50°F (15–30K); ±7°F (4K) when superheat is in excess of 50°F (30K)
Initial steam quality	±0.5 percentage points of quality for turbines with wet throttle steam	±0.1 percentage points of quality for turbines with wet throttle steam
Primary flow	Not specified	Refer to para. 4-10.1
Secondary flows	±5.0% × (primary flow)/(secondary flow)	Same as (d) × (primary flow)/(secondary flow)
Pressure drop through fossil unit reheater	±50.0%	
Extraction pressures	±5.0%	
Extraction flows [Note (3)]	±5.0%	
Temperature of feed water leaving final heater	±10°F (6K)	
Exhaust pressure [Note (4)]	±0.05 psi (0.34 kPa) or ±2.5% of the absolute pressure, whichever is larger	±0.02 psi (0.14 kPa) or ±1.0% of the absolute pressure, whichever is larger
Load	Refer to para. 3-13.5	±0.25%
Voltage	±5.0%	
Power factor	Not specified	±1.0%
Speed	±5.0%	±0.25%
Aggregate isentropic enthalpy drop of anyone of the sections of an automatic-extraction turbine	±10.0%	

NOTES:
(1) In any event, the manufacturer's allowable variations in pressure temperature and speed are not to be exceeded, unless specifically agreed to before the test.
(2) Fluctuations would be indicated by scatter in the data (refer to para. 3-9.2).
(3) When steam is extracted for feedwater heaters, the extraction pressures (which are fixed by the turbine design and flow conditions) may deviate from expected values by a few percent. This normally has a negligible effect upon the overall performance. It shall be ascertained that such deviations that do exist are not due to malfunctioning of feedwater heaters. If large deviations persist, agreement must be reached as to the course to be followed.
(4) If it is not practicable to obtain design or rated exhaust pressure, the test may be conducted by agreement at another exhaust pressure, and either party may require that the exhaust pressure correction curve be verified by test.

Copyright ASME International
Provided by IHS under license with ASME
No reproduction or networking permitted without license from IHS Not for Resale

purity, with safety as the primary consideration. For instances where hydrogen purity is below the manufacturer's specified value, the test should be postponed until the purity can be brought to the specified value. Improvement is usually easy to achieve and should not impose undue hardship on the parties to the test. The hydrogen purity instrumentation should be checked to ensure correct indication.

3-8.5

The turbine and its cycle shall be in normal operation during the test, except for cycle isolation (see para. 3-5). Except as provided in para. 3-8.2, no special adjustments shall be made to the turbine that are inappropriate for normal and continuous operation.

3-8.6

The turbine shaft-sealing system, if controlled, shall be adjusted to normal operating conditions during a test and arrangement made to measure any flow outward or inward that will influence test results.

3-8.7

During any heat rate, steam rate, or capacity determination of a constant-speed turbine, the turbine shall be operated at specified speed.

3-8.8 Permissible Adjustments

To attain specified operating conditions, it is permissible to

(a) Lower Initial Pressure. If this is accomplished by throttling the initial steam supply, it must be done not fewer than 10 pipe diameters upstream from the point at which the initial steam pressure and temperature are measured.

(b) Adjust Exhaust Pressure. This may possibly be done by bleeding air into the suction of the air removal equipment removing some air removal equipment from service, or reducing cooling capacity. Hotwell conductivity should be closely monitored if these adjustments are made.

3-8.9 Valve Positions

Nozzle, bypass, extraction, and secondary flow valves to or from the turbine, if provided, shall be in the position contemplated by the specified performance. If the specification is not clear in this respect, or if any of these valve positions cannot be attained, the parties to the test shall agree as to the intent.

3-8.10

Measurements of feedwater heater and condenser circulating water leakage are not required, but these components should be checked for excessive leakage. This check is particularly important on feedwater heaters where leakage would affect the determination of primary or reheater flow.

3-8.11 Deviations

Deviations of variables in excess of the limits prescribed in Table 3-1, or as otherwise agreed upon, may occur during a test run. If such deviations are observed during the test run, the cause shall be eliminated and the test continued, if possible, until all variables are within the specified limits for the planned duration of the test run.

If the cause of the deviations cannot be eliminated during the test run, or if deviations are discovered during computation of results from a completed test run, that run shall be rejected in whole, or in part, and repeated as necessary after the cause of the deviations has been eliminated, except in the case of initial steam pressure and initial and reheat steam temperature.

If the initial steam pressure, initial steam temperature, or reheat steam temperature exceed the maximum permissible deviation indicated in Table 3-1, the correction factors for these variables must be calculated for the specific cycle being considered and used in place of the standard steam conditions corrections normally provided with the turbine.

Any rejected portions of the test run shall not be used in computing the overall averages. The results of that rest run will then be deemed acceptable provided

(a) valid periods aggregate to one hour or more,

(b) quantity of readings obtained during the valid period satisfies the criteria of paras. 3-9.1 through 3-9.5, and

(c) selected time periods do not include generation changes, level changes, or any integrated data from any part of the invalid periods

3-9 FREQUENCY OF OBSERVATIONS AND DURATION OF TEST RUNS

3-9.1 Frequency of Observations

For steam rate or heat rate tests, output observations from indicating meters and differentials on flow meters for primary flow shall be made at intervals no greater than one minute. Other important measurements shall be made at no greater than five-minute intervals. Integrating meters and water levels shall be read at intervals not exceeding 10 minutes.

3-9.2 Duration of Test Runs

This Code recommends a minimum steady-state test run of two-hour duration for each load point. Although high-speed data acquisition systems may permit enough readings to be taken in fewer than two hours to satisfy

Copyright ASME International
Provided by IHS under license with ASME
No reproduction or networking permitted without license from IHS
Not for Resale

other requirements, the two-hour minimum is recommended to verify cycle isolation. In any case, the length of the test period for which readings are averaged shall be at least as long as the period that corresponds to N_R from Fig. 3-1. N_R is the required number of readings whose averaged scatter will affect the test results by an uncertainty no larger than 0.05%. Table 3-2 contains the percentage coefficients to be used to calculate $\overline{Z}$, the abscissa on Fig. 3-1.

3-9.3 Number of Readings Available

During a test run, after several readings have been recorded and their scatter established, Fig. 3-1 may be used to determine how many readings are needed to comply with the 0.05% effect of the scatter on the results or to determine if improvements are needed in the instrumentation or control of test conditions.

3-9.4 Illustrations and Derivation

Section 7 in this Code presents illustrations for the use of Fig. 3-1 as well as its derivation. A method is also presented and illustrated for estimating the uncertainty of a test based on all the readings of a specific type that are used to calculate the test results. A comprehensive treatment of calculation of uncertainty is presented in PTC 19.1.

3-9.5

Only such observations and measurements need be made as apply and are necessary to attain the objective of the test. In the case of the alternative test, additional measurements beyond those required may be desirable to aid in the analysis of test results.

3-10 CALIBRATION OF INSTRUMENTS

All measuring instruments shall be accurate and reliable and calibrated as required in compliance with criteria given in Section 4. Calibration standards shall be traceable to those maintained by the National Institute of Standards and Technology.

The ratio of the accuracy of the measuring standard compared to the instrument being calibrated is referred to as accuracy ratio. Wherever achievable, an accuracy ratio of 10:1 is desirable for calibration work. Extremely accurate instruments approaching the accuracy of the measuring standard may have a ratio of 4:1.

Consideration shall be given to the environment in which the calibration takes place. Even under laboratory conditions, the quantity being measured and instruments obtaining the measured value can be influenced by vibration, magnetic fields, ambient temperature, changes in local acceleration due to gravity,

Table 3-2 Definitions and Notes to Fig. 3-1

θ_1, θ_2 Influence Factors for Calculations $\overline{Z}$, the Abscissa of Fig. 3.1

θ_1 is expressed as percent effect per percent of instrument reading.
θ_2 is expressed as percent effect per unit of instrument reading.
θ_1', θ_2' is the slopes of the correction-factor curves.
θ_1'' or θ_2'' are used to take into account the effect of the instrument-reading range for fluctuation in measurements used to establish any enthalpy appearing in the heat rate equation. For θ_1'' or θ_2'' values, use the applicable Figs. 7-2, 7-3, 7-4, or 7-5 after converting the ordinate to percentage effect per percent of absolute pressure or absolute temperature for θ_1'' or percent effect per unit of reading for θ_2''.

Type of Data	θ_1	θ_2
Power	1.0	. . .
Flow by Volumetric Weigh Tanks	1.0	. . .
Flow by Flow-Nozzle Differentials	0.5	. . .
Steam Pressure and Temperature	$\theta_1' + \theta_1''$	$\theta_2' + \theta_2''$
Feedwater Temperature	. . .	θ_2''
Exhaust Pressure	θ_1'	θ_2'

For Combining Types of Data

Type of Data	Combined
Average of n columns of similar readings, such as 4 exhaust-pressure taps	$\overline{Z}_n = \dfrac{\sqrt{\sum \overline{Z}_i^2 / n}}{\sqrt{n}} = \dfrac{1}{n}\sqrt{\sum \overline{Z}_i^2}$
Total effect of m types of readings with the same time interval between readings, such as load and flow or pressure and temperature	$\overline{Z}_m = \sqrt{\sum \overline{Z}_n^2}$

GENERAL NOTES:
(a) $\overline{Z}$ is the percentage effect the instrument readings range (maximum reading − minimum reading) has on the test results.
(b) Subscript i refers to columns of individual measurements.

Copyright ASME International
Provided by IHS under license with ASME
No reproduction or networking permitted without license from IHS Not for Resale

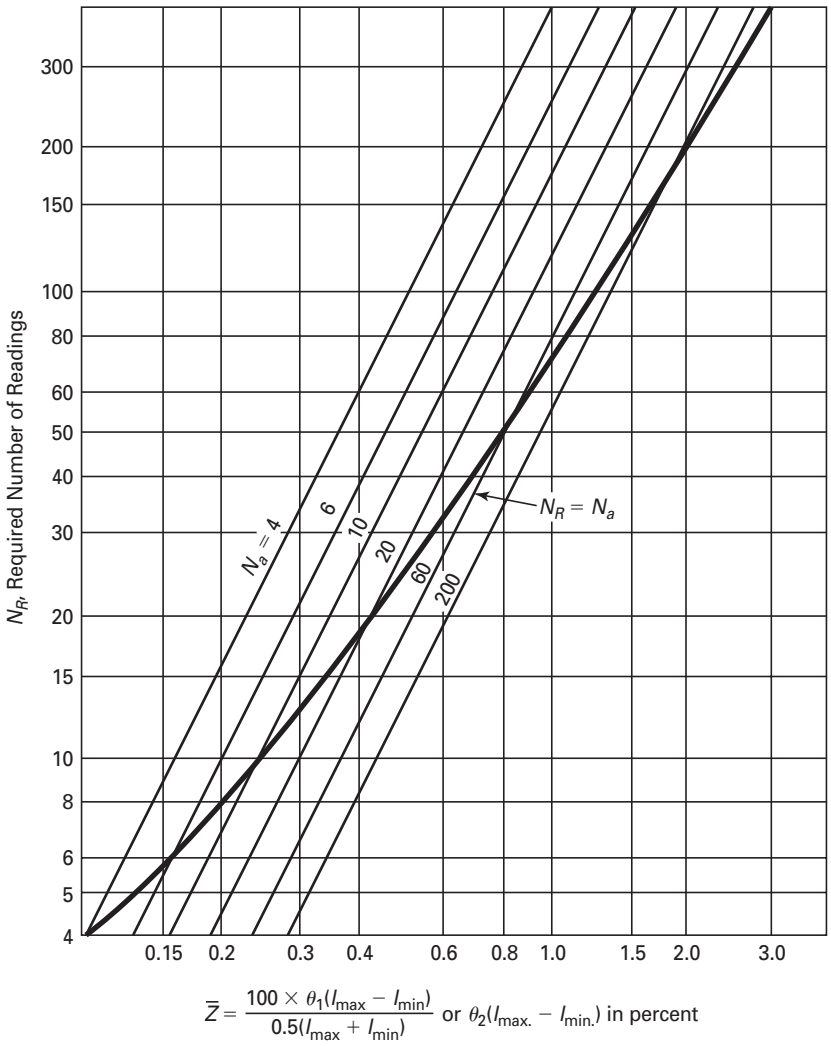

GENERAL NOTES:
$\bar{Z}$ = percentage effect of instrument reading range on the test results
N_a = number of readings available whose maximum and minimum values are used to determine $\bar{Z}$
I = instrument readings in engineering units
θ_1 = factor from Table 3-2, effect per percent of reading
θ_2 = factor from Table 3-2, effect per unit of reading

Fig. 3-1 Required Number of Readings (N_R) Corresponding to 0.05% Effect on the Test Results Due to Scatter

fluctuation, instability of the voltage source, and other variables.

A calibration should cover the range for which the instrument is used. The increment between calibration points and method of interpolation between these points shall be selected so as to attain the lowest possible calibration uncertainty.

For each calibration point, a deviation may be found between the value measured by the instrument to be calibrated and the calibration standard. A plot or table of deviation versus instrument measurement is then used to determine the amount of correction to be applied to a test measurement. Calibration results also may take the form of instrument output at a known value of input as determined by the calibration standard. From this, a conversion equation can be developed for the instrument.

The calibration report should include the identification of the calibration equipment and instruments, a description of the calibration process, a statement of uncertainty of the measuring standard, and a tabulation of the

Copyright ASME International
Provided by IHS under license with ASME
No reproduction or networking permitted without license from IHS
Not for Resale

recorded calibration data. The report should be signed by a responsible representative of the calibration laboratory. Where appropriate, calibration shall be performed with test instruments installed in place for the test, and all calibrations shall be available prior to the test.

In-place calibration of station instrumentation is necessary when secondary flow measurements are made by a permanently installed flow element for which calibration is required or where station instruments and a computer are used for test data acquisition.

Installation of all test instrumentation shall comply with all applicable criteria of Section 4. Instruments subject to failure or breakage in service should be duplicated by reserve instruments, properly calibrated, and ready to be placed in service without delay.

3-11 STEAM PRESSURE AND TEMPERATURE MEASUREMENTS

3-11.1

Extraction pressure and temperature measurements, when required, should be made both at the turbine and feedwater heater ends of the extraction piping for feedwater heaters located outside the condenser neck. Source connections in the intermediate pressure to low-pressure crossover pipe or in the low-pressure turbine bowl may be used as a common point for intermediate pressure section and low-pressure section efficiency determinations. Paragraphs 4-17.21 and 4-18.3 should be consulted for guidance in selecting locations for pressure taps and thermowells.

3-11.2

Steam enthalpy shall be determined from temperature and pressure measurements only when the steam is superheated at least 27°F (15K).

3-11.3 Thermodynamic Properties

Except with written agreements to the contrary, the latest edition of the ASME Steam Tables, "Thermodynamic and Transport Properties of Steam" and its enthalpy entropy diagram (Mollier chart), shall be used in the calculation of test results. When computers are used, they may link to compiled versions of the source code as supplied with the steam tables. Otherwise, they shall be programmed in accordance with The International Association for the Properties of Water and Steam (IAPWS) Industrial Formulation 1997 (IAPWS-IF97) for Industrial use. These formulations are based on the International Temperature Scale of 1990 (ITS-90).

3-12 CORRECTIONS

3-12.1

Corrections shall be applied to the test results for any deviations of the test conditions from those specified. Correction factors may be in the form of curves or numerical values. The method of applying corrections shall be carried out as required in Section 5. Thermal losses associated with unlagged heaters and connecting piping located in the condenser neck shall be considered cycle losses, not turbine losses.

3-12.2

The numerical values of corrections shall be agreed upon prior to the test. Auxiliary tests may be run for the purpose of verifying the value of certain correction factors. Any such special tests shall be completely described in the test report, as to the methods employed and the results obtained (see paras. 3-4.5 and 3-8.11 and Section 5).

3-13 METHODS OF COMPARING TEST RESULTS

3-13.1

The method of comparing test results to the specified performance shall be agreed upon by both parties prior to the test. The following are different methods that can be utilized to make these comparisons.

3-13.2 Valve Point Basis

If the specified performance is based on valve points, then a locus curve can be drawn through the specified performance points for comparison with another locus curve drawn through the corrected test heat rates conducted at valve points. Test results may be compared with the specified performance by reading the difference between the two locus curves at the specified kilowatt load(s). Alternatively, the comparison may be made at the test valve-point loads. In any case, the provisions and intent of the contract must be met.

There may be instances when regulatory restrictions limit operation of a unit to loads below the valves-wide-open point. In such cases, it is necessary to apply a correction for operating on a valve loop, so that the test heat rate at the highest permissible test load may be included on the curve of corrected test heat rates.

It is recommended that the highest test load be as close to the valves-wide-open load as possible to keep the valve loop correction to a minimum. Testing at reduced steam generator pressure is recommended, where practical, to minimize the loop correction.

The following approach is recommended:

(a) Establish by test the pressure drop across the last control valve(s) to open in valves-wide-open operation. Steam generator pressure may be reduced to open the last valve(s). If this is not possible, use the design pressure drop for the last control valve(s), when fully open.

(b) Measure the pressure drop across the last control valve(s) to open during the highest load test.

Copyright ASME International
Provided by IHS under license with ASME
No reproduction or networking permitted without license from IHS
Not for Resale

(c) Apply the following equation to obtain the percentage heat rate correction:

$$\text{Percent } \Delta\text{HR} = \frac{w_n}{w_{mo}} \left(\frac{\Delta p_{mo} - \Delta p_{vwo}}{p_t} \right) 100k$$

where subscript *mo* indicates highest load test and

$\frac{w_n}{w_{mo}}$ = the ratio of flow through the final valve(s) to total flow during the highest load test (decimal fraction of total flow being subjected to extra throttling)

$\frac{\Delta p_{mo} - \Delta p_{vwo}}{P_t}$ = the ratio of (1) the difference between pressure drop across the final valve(s) during the highest load test and pressure drop across the same valve(s) at valves-wide-open conditions to (2) throttle pressure (extra pressure drop due to final valve(s) not being wide open)

k = the percentage effect on heat rate for a 1% change in pressure drop

P_t = absolute throttle pressure

k = 0.15 for turbines with nuclear steam supply operating predominantly in the moisture region

k = 0.10 for turbines operating predominantly in the superheat region

k values for other types of turbines should be obtained from the manufacturer.

3-13.3 Mean-of-the-Valve-Loop Basis

If the specified performance is based on mean of the valve loops, it may be convenient to convert to the valve-point basis, and the correction curves for this conversion shall be furnished by the manufacturer. However, if there is any doubt as to their accuracy, enthalpy drop or other efficiency tests can be run to establish the difference between the valve-point and mean-of-the-valve-loop curves.

3-13.4 Throttled Valve(s) Basis

For machines with a single valve or multiple valves operating in unison, each test heat rate should be compared to design heat rate at the same percent of valves-wide-open load. This can best be done by including a test at the valves-wide-open load. Therefore, this is the preferred condition. However, some units cannot be tested with valves wide open. In these cases, it is necessary to predict the test valves-wide-open load using the available test information given below. It is recommended that the highest test load be at least 95% of the load corresponding to rated flow at specified steam conditions and cycle arrangement in order to minimize uncertainty in the extrapolation method. The following approach is recommended:

(a) Establish the relationship between the test throttle flow vs. first stage inlet (bowl) pressure over as much of the load range as possible (see Fig. 3-2). Correct the throttle flow from the test throttle steam conditions to the specified throttle steam conditions at valves wide open as shown in para. 5-4.2. The first stage inlet (bowl)

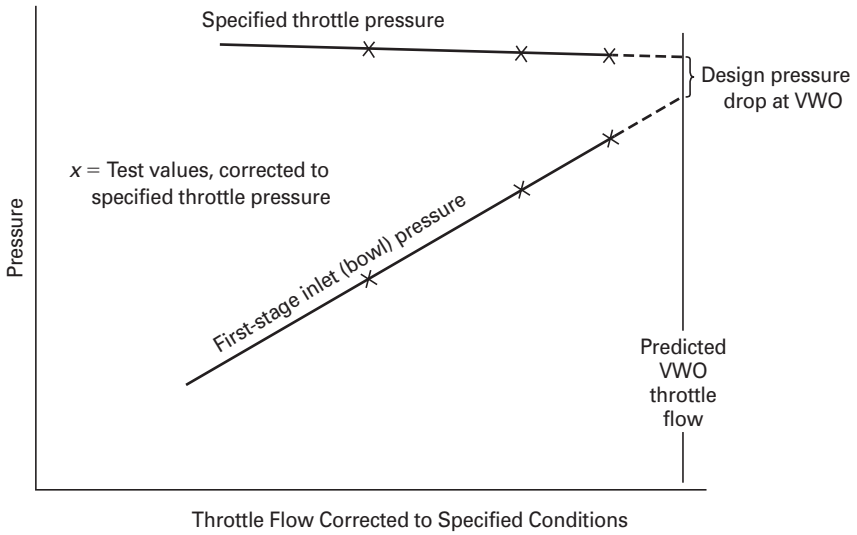

Fig. 3-2 Corrected First Stage Inlet (Bowl) Pressure vs. Corrected Throttle Flow for Use in Determining Predicted VWO Throttle Flow

Copyright ASME International
Provided by IHS under license with ASME
No reproduction or networking permitted without license from IHS
Not for Resale

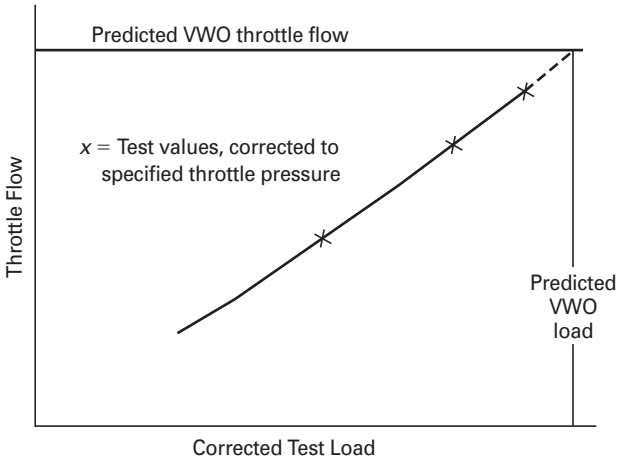

Fig. 3-3 Corrected Throttle Flow vs. Corrected Test Load for Use in Determining Predicted VWO Load

pressure must be corrected to specified throttle pressure at valves wide open as follows:

$$p_c = p_o \times \frac{p_s}{p_t}$$

where

p_c = corrected first stage inlet (bowl) absolute pressure
p_o = test first stage inlet (bowl) absolute press
p_s = specified throttle absolute pressure
p_t = test throttle absolute pressure

(b) In tests of light water reactor (LWR) cycles with reheat, the use of the alternative procedure may not provide sufficient data to establish the turbine throttle flow, particularly if the main steam flow to the reheater is not measured. In such tests, one of the following procedures may be used by agreement of the parties to the test:

(1) Determine the main steam flow to the reheater with available plant instrumentation or

(2) Conduct calibration tests, without the reheater in service, of the first stage pressure versus throttle flow, and correct the flow using manufacturer's data to obtain the throttle flow during tests with the reheater in the cycle.

If either of these procedures cannot be implemented, then

(3) Use the design values for the reheater flow and subtract this value from the total flow to obtain the throttle flow for each test point.

(c) Using the above relationship, extrapolate to a throttle flow that would exist at the valves-wide-open point, using the design pressure drop from the throttle inlet to first stage inlet (bowl) at valves wide open.

(d) Determine the valves-wide-open load by establishing a curve of corrected throttle flow vs. corrected test load (see Fig. 3-3). Extrapolate to valves-wide-open flow (from item 2) using the slope of the corresponding curves derived from design heat balances as a reference.

(e) The percent of valves-wide-open load for any test point can be determined using the extrapolated valves-wide-open load.

3-13.5 Specified Load Basis

During steam rate or heat rate tests at specified loads, it shall be permissible to adjust the load of the test so that when all corrections have been applied, the corrected load will be within five percent of the load specified for the test. The test results may be reported at a load within this percentage.

The load correction may be applied only when guarantees are made at specified loads and the valve point or mean-of-the-valve-loop comparisons cannot be utilized.

3-14 TOLERANCES

3-14.1

Tolerances and allowances are contractual adjustments to test results or guarantees and are beyond the scope of this Code. The test results shall be reported as calculated from test observations with only such corrections as are provided for in this Code.

Copyright ASME International
Provided by IHS under license with ASME
No reproduction or networking permitted without license from IHS
Not for Resale

Section 4
Instruments and Methods of Measurement

4-1 GENERAL

4-1.1

In the absence of special agreements to the contrary, this Code presents the mandatory requirements for instruments, methods, and precautions which shall be employed. It emphasizes the use of advanced instrument systems, such as those using electronic devices or mass flow techniques, that are suitable for use with digital systems. The Supplements on Instruments and Apparatus, PTC 19 series, provide general and authoritative information concerning instruments and their use and should be consulted if sufficient information is not included in this Code.

4-1.2 Duplicate Instrumentation

This Code specifies duplicate instrumentation for measuring certain types of data that are critical to the test results; such data may include the flow nozzle pressure differentials and steam temperatures. Other data, such as exhaust pressures, vary over the region involved; the several measurements required confirm each other by their pattern from test point to test point. Beyond these, duplication of many types of instrumentation should be seriously considered to ensure successful use of the instruments or detect trouble and gain the significant reduction of the uncertainty of the average of the duplicating instruments relative to that of a single instrument [refer to Figs. 4-11(a) through 4-11(e)].

4-1.3 Equivalent Instrumentation

By mutual agreement of the parties to the test, manual instrument systems as described herein may be used as an alternative to the advanced instrument systems specified by this Code.

4-1.4 Use of Mercury in Instrumentation

Certain manual instrumentation systems require the use of indicating fluids to indicate pressure or differential pressure. Historically, mercury is one of the fluids commonly used for this purpose. Mercury will alloy with many other metals, such as copper, lead, tin, bronze, and Monel, and their alloys. There is evidence that Inconel alloys, zircaloy, and certain stainless steels are also sensitive to mercury. These materials are used extensively in the construction of various nuclear steam supply system components that come in contact with feedwater returned from the turbine cycle.

Mercury constitutes a hazard to light-water cooled and moderated nuclear steam supply systems if introduced into the feedwater stream. If the use of mercury cannot be avoided in pressure-measuring instruments, the following precautions are recommended:

(a) Keep valves to test instruments closed except during test runs.

(b) Install quick-closing solenoid valves in test instrument-sensing lines to close automatically on systems upsets.

(c) Employ double mercury traps.

(d) Locate primary flow element in the low-pressure part of the feedwater cycle where it is more remote from the nuclear steam supply system (see para. 4-9.1).

Mercury metal and compounds of mercury may cause dangerous environmental problems. The relatively high vapor pressure of mercury presents a serious health hazard if spillage occurs. Extreme care is necessary, and strict adherence must be given to all applicable regulations concerning mercury. If the risk of using mercury-filled manometers is judged unacceptable by one or both parties to the test, regardless of the degree of precaution exercised, the parties may employ advanced instrument systems (such as those employing certain high sensitivity differential-pressure transducers) in accordance with paras. 4-1.1 and 4-8.1 of this Code.

4-1.5 Necessary Instruments

The instruments generally required for a Code test of a steam turbine are listed below and for check purposes only.

(a) for a mechanical-drive turbine, a dynamometer of a type suitable to the turbine and circumstances of the test (see para. 4-2).

(b) for a turbine-generator, instruments for the measurements of the electrical output and power for excitation, if separately supplied, and for other turbine-generator auxiliary services, (see Subsections 4-4 through 4-7).

(c) for determining condenser leakage, instruments required for using tracer techniques, electrolytic or other measuring means refer to PTC 12.2, Steam Surface Condensers.

Copyright ASME International
Provided by IHS under license with ASME
No reproduction or networking permitted without license from IHS
Not for Resale

(d) for the location and type of test instrumentation required for full-scale testing of a typical unit, see Fig. 4-11(a) to Fig. 4-11(c) and Subsection 4-8 through para. 4-19.1.8

(e) for the location and type of test instrumentation required for the alternative test with final feedwater flow measurement, see Fig. 4-11(d) to Fig. 4-11(e) and Subsection 4-8 through para. 4-19.1.8

(f) for measurement of speed, see Subsection 4-20

4-1.6 Measuring Device With Digital Outputs

To minimize uncertainty, it is recommended that measurement signals could be converted from analog to digital only once. Therefore, if a measuring device has a digital output, this digital signal should be transmitted to a data logger rather than use an analog converter.

4-2 MEASUREMENT OF MECHANICAL OUTPUT

4-2.1 Recommended Measurement Methods

Absorption dynamometers (reaction torque measurement systems) or transmission dynamometers (shaft torque meters) shall be used to measure mechanical output of prime movers, which can be an auxiliary turbine, turbine generator shaft, or electric motor. These measurement systems are described in detail in PTC 19.7 on "Measurement of Shaft Horsepower."

The direct method for measuring power, utilizing a dynamometer or torque meter, involves determination of the variables in the following equation:

For power expressed in (*SI Units*)

$$P = NT$$

where

P = power, watts (W)
N = rotational speed, rad/sec
T = torque, newton–meters

For power expressed in (*U.S. Customary Units*)

$$P = \frac{2\pi NT}{33000}$$

where

P = power, horsepower (hp)
N = rotational speed (rpm)
T = torque, foot-pounds (ft-lbf)

Rotational speed measurement is discussed in Subsection 4-20.

For shaft power measurement when the prime mover is driving a connected load, such as required for a feedwater pump drive turbine in an acceptance test, the transmission dynamometer (shaft torque meter) is recommended. Absorption dynamometers (reaction torque measurement systems) absorb the primer mover power output and cannot be used while simultaneously driving a connected load.

Either surface strain shaft torque meters or angular displacement shaft torque meters, which are compatible for use in either computerized data recording systems or with electronic digital indicators, should be used.

For shaft power measurement of a mechanical drive turbine that can be tested without its connected load, an absorption dynamometer (reaction torque measurement system) can be used. Such a test might occur when a mechanical drive turbine is tested independently of a turbine-generator acceptance test.

Precautions must be taken in the construction and use of torque meters to ensure accuracy. The torque meter shall be accurate within 1% of torque. Torque meter readings shall be taken with the frequency indicated in para. 3-9 and not exceed the permissible deviations shown in Table 3-1. Because power is proportional to speed, speed shall be accurately determined in accordance with para. 4-20.

4-2.2 Transmission Dynamometers (Shaft Torque Meter)

Transmission dynamometers shall be calibrated before and after the test series with the torsional member at approximately the same temperature as expected during the test. The calibration shall be conducted with the torsion-indicating device in place, taking care not to introduce any bending moments in the torque meter shaft. One such method of calibration is shown in PTC 19.7. Recordings of the indicator shall be made with a series of increasing and then decreasing loads, with the precaution that during the recording of each series of readings, the loads shall not be reversed. The calculation of output shall be based on the average of the increasing and decreasing readings. If the difference in readings between increasing and decreasing loads exceeds 0.2% of the load, the dynamometer shall be deemed unsatisfactory.

The shaft torque meter may be either a special coupling spacer, installed only during the test, that connects the prime mover shaft to connected load or a permanently installed part of either the prime mover shaft or connected load shaft.

To minimize potential error, the shaft torque meter capacity range should be approximately equal to but slightly greater than the torque range of the prime mover.

Temperature compensation in the electronic circuit is recommended to minimize errors that could occur if the test is conducted at temperatures different from the temperature that existed when the torque meter was calibrated.

4-2.3 Absorption Dynamometers (Reaction Torque System)

Absorption dynamometers are preferably arranged so that the reaction due to friction of any bearings that are essentially a part of the dynamometer will be automatically included in the dynamometer readings. Other-

Copyright ASME International
Provided by IHS under license with ASME
No reproduction or networking permitted without license from IHS
Not for Resale

wise, the parties to the test shall agree upon an allowance for these losses, which shall be stated in the test report.

4-2.4 Precautionary Measures for Absorption Dynamometers

In the case of absorption dynamometers, care must be taken so that no external forces are applied which may introduce errors. The operating fluid of water brakes and cooling air of electric absorption dynamometers shall enter and leave in the radial or axial direction. There shall be no sensible fluid velocities external to the essential brake parts that have any tangential components. Hose connections, if employed, shall cause no sensible force in the tangential direction. If automatic valves are employed to regulate operating fluid flow by means of movement of the stationary dynamometer element, these valves shall have their resistance to motion equal in both directions. Dashpots employed to dampen oscillation shall also have their resistance to motion equal in both directions. Other precautions for specific types of absorption dynamometers are detailed in PTC 19.7.

4-2.5

Absorption dynamometers shall be carefully examined before and after the test and zero scale readings taken. The output shall be determined as shown in PTC 19.7.

4-3 MEASUREMENT OF FEEDWATER PUMP POWER

4-3.1 General

Any thermal energy that is either added to or removed from the turbine cycle by the feedwater pump or its associated auxiliary systems shall be measured and properly accounted for in the turbine heat rate calculations (see paras. 5-7.1 and 5-7.2). The following types of feedwater pump drives can be used: auxiliary turbine drives, motor, and turbine-generator shaft drives.

Regardless of the type of feedwater pump drive that is used, the feedwater pump power can be determined by either of the following methods:

(a) pump shaft power calculated from measured shaft torque and speed (see para. 4-2 for torque measurement and para. 4-20 for speed measurement).

(b) pump power calculated by an energy balance around the pump using measured fluid flow rates, temperature, and pressure of all fluids that enter and leave the feedwater pumps (see para. 4-3.5). The energy balance method is described in this Section.

4-3.1.1 For auxiliary turbine driven feedwater pumps, it is also necessary to determine the thermal energy that is extracted from the turbine cycle. This can be accomplished by one of the following methods:

(a) measurement of flow rate, pressure, and necessary measurements to obtain enthalpy of steam that enters and leaves the auxiliary turbine (see paras. 4-12 and 4-16.3)

(b) shaft power calculated from measured torque and speed and then divided by the efficiency of the auxiliary turbine to obtain the energy removed from the turbine cycle

Method *(b)* requires the use of the manufacturer's predicted turbine efficiency and must be agreed to by all parties to the test, especially if the auxiliary turbine is being accepted tested concurrently with the turbine-generator.

4-3.2 Typical Instrumentation for Pump Power by Energy Balance Method

Figure 4-1 shows the typical instrumentation for measurement of feedwater pump power and is representative of feedwater pumps that have a speed changer and hydraulic coupling. The prime mover could be an auxiliary turbine, motor drive, or turbine generator shaft drive. The hydraulic coupling and speed changer are not commonly used with all three types of feedwater pump drives. However, in some situations, they may be used. Therefore, the following text describes thermodynamic property measurements and calculations for the most general situation.

4-3.3 Turbine-Generator Shaft-Driven Pumps

When feedwater pumps are driven from the turbine generator shaft, the measurements described below must be made as accurately as possible to determine the power supplied by the turbine(s) for driving pump(s) and any associated hydraulic coupling(s) and/or speed increaser(s).

4-3.4 Required Measurements

The power transmitting oil for the hydraulic coupling and lubricating oil for the pump, speed changer, and hydraulic coupling is cooled in heat exchangers using water as a cooling medium (see Fig. 4-1). Changes in instrumentation requirements resulting from any variation in this arrangement shall be agreed upon prior to the test. The illustration on Fig. 4-1 is for one pump, but the same measurements will be necessary for each pump in service. In some cases, it may not be practical to measure the individual water flow through each pump or the injection water flows to and from each pump. In such cases, the power for each individual pump cannot be accurately determined. However, the total power consumed by the feedwater pumps in service is all that is needed for an overall test.

The temperature, pressure, and flow measurements should be of such accuracy that the effect on the overall test results shall be less than 0.1%. The measurements requiring the most care are the temperatures of the feedwater entering and leaving the pump (t_9 and t_{10}) if feed-

Copyright ASME International
Provided by IHS under license with ASME
No reproduction or networking permitted without license from IHS
Not for Resale

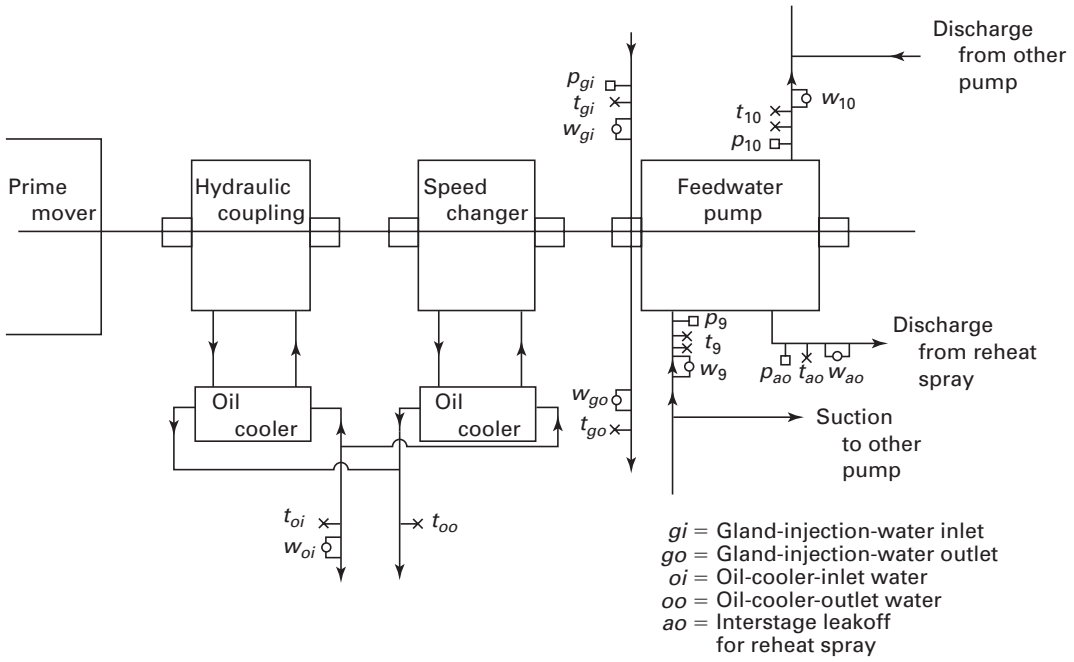

Fig. 4-1 Typical Instrumentation for Measurement of Feedwater Pump Power

water pump power is determined as described in para. 4-3.5. These temperatures may be measured by two or more random resistance thermometers and random bridges or a difference resistance bridge (see para. 4-18). The individual measurements for each location shall agree within 0.2°F (0.1K). Alternatively, the temperature differences between pump discharge and suction may be measured by multiple junction differential thermocouple devices and random millivolt instruments.

4-3.5 Calculations

The calculations shown below closely follow PTC 8.2 on "Centrifugal Pumps."

The power taken from the prime mover shaft is the sum of the power equivalent of the enthalpy rise of the water flow through the pump; the power used in bearing losses, gear losses, and hydraulic coupling losses; and the power equivalent of the radiation losses.

The basic equations for pump shaft power are: The power equivalent of the enthalpy rise of the water ($P_{\text{enthalpy rise}}$) is:

$$P_{\text{enthalpy rise}} = \frac{w_9(h_{10} - h_9) - w_{ao}(h_{10} - h_{ao}) + w_{gi}(h_{10} - h_{gi}) - w_{go}(h_{10} - h_{go})}{K}$$

where K is a constant depending on the units of P, w, and h (see Section 2 and Fig. 4-1 for nomenclature).

If P is in kW, w in kg/s, and h in kJ/kg, then $K = 1$

If P is in Kw, w in kg/hr, and h in KJ/kg, then $K = 3600$

If P is in kw, w in lbm/hr, and h in Btu/lbm, then $K = 3412.14$

The power equivalent of the bearing, gear, and hydraulic coupling heat losses ($P_{\text{heat losses}}$) as determined from the heat absorbed by the oil cooling water is:

$$P_{\text{heat losses}} = \frac{w_{oi}(h_{oo} - h_{oi})}{K}$$

Determination of water flow at the pump discharge will vary, depending on whether the main flow measurement nozzle is located in the pump suction or pump discharge piping. If the nozzle is located in the suction piping, the pump discharge flow rate (w_{10}) is:

$$\text{Pump discharge flow rate} = w_{10} = w_9 + w_{gi} - w_{go} - w_{ao}$$

The power equivalent of the radiation losses ($P_{\text{radiation losses}}$) can be calculated or estimated, but the amount of this loss may be negligible (refer to PTC 10 on "Compressors and Exhausters" for the method of calculating this loss).

The pump shaft power (0) is:

$$P = P_{\text{enthalpy rise}} + P_{\text{heat losses}} + P_{\text{radiation losses}}$$

4-3.6 Alternative Calculations

Another method of determining pump shaft power involves pump efficiency curves. Water horsepower (Whp) is determined from these measurements and then divided by expected pump efficiency to obtain pump shaft power.

Copyright ASME International
Provided by IHS under license with ASME
No reproduction or networking permitted without license from IHS
Not for Resale

The basic equations for pump shaft power are:

$$kW = \frac{(Whp)0.746}{\eta}$$

$$kW = \frac{(Q\gamma H)0.746}{550\ \eta}$$

where

η = pump efficiency from curve
Q = volumetric flow rate at pump discharge, ft^3/sec (m^3/s)
γ = specific weight, lbf/ft^3 (N/m^3)
H = pump total discharge head minus total suction head, ft (m)

Measurements and calculations of water horsepower are detailed in PTC 8.2.

Other losses, such as hydraulic coupling losses, speed changer losses, seal flows, radiation, and spray water takeoffs, must also be accounted for as described in para. 4-3.5 (refer to Fig. 4-1 for these items).

An ordinary pump characteristic curve supplied with the pump has two major limitations. First, the efficiency versus capacity curve is valid at only one point because it is plotted at constant speed and many feedwater pumps run at variable speed. One should obtain the variable speed efficiency versus capacity curve prior to using this method.

Second, if the pump is operating at off-design speed during the test, the pump efficiency is usually different from predicted efficiency by a small amount. Hence, test speed should be within 2% of design speed in order that pump power can be determined as accurately as possible.

4-4 MEASUREMENT OF ELECTRICAL POWER

4-4.1 General Requirements for A-C Generators

It is recommended that the power output of an A-C generator be measured by sufficient instrumentation to ensure that accurate metering (i.e., no uncertainty is introduced due to the metering method) will be provided under all conditions of load power factor and unbalance.

Generator loss curves provided by the manufacturer may require either the kilovolt-ampere (kVA) output or kilowatt output and power factor of the generator to determine the generator loss at specified hydrogen pressure.

4-4.2 Recommended Metering Connection Methods

The recommended metering methods that achieve accurate metering for three-phase systems are as follows:

(a) four-wire generator connections — three single-phase meters

(*b*) three-wire generator connections — two single-phase meters

Refer to para. 4-5.1, below, for further discussion.

The necessity for the recommended metering methods is discussed in the following paragraphs.

4-4.3

Blondel's Theorem for the measurement of electrical power or energy states that in an electrical system of N conductors, N-1 metering elements are required to measure the true power or energy of the system. It is evident, then, that the electrical connections of the generator to the system govern the selection of the metering system.

Connections for three-phase generating systems can be divided into the following two general categories:

(a) three-wire connections with no neutral return to the generating source

(b) four-wire connections with the fourth wire acting as a neutral current return path to the generator

4-4.4

The following describes different types of three and four-wire generator connections that are used.

4-4.4.1 Three-Wire System. A common three-wire system is a wye connected generator with a high impedance neutral grounding device. The generator is connected directly to a transformer with a delta primary winding, and load distribution is made on the secondary, grounded-wye side of the transformer [see Fig. 4-2(a)]. Load unbalances on the load distribution side of the generator transformer are seen as neutral current in the grounded wye connection. However, on the generator-side of the transformer, the neutral current is effectively filtered out due to the delta winding, and a neutral conductor is not required.

Another type of three-wire system utilizes a wye connected generator with a low impedance neutral grounding resistor. The generator is connected to a three-wire load distribution bus, and the loads are connected either phase to phase, single phase, or three phase delta. The grounding resistor is sized to carry 400–2000 amperes fault current.

An ungrounded wye generator is less common than the high impedance grounded-wye generator, but when used with a delta-wye grounded transformer, it is also an example of a three-wire generator connection [see Fig. 4-2(a)].

A final example of a three-wire generator connection is the delta-connected generator. The delta-connected generator has no neutral connection to facilitate a neutral conductor; hence, it can be connected only in a three-wire connection [see Fig. 4-2(b)].

4-4.4.2 Four-Wire System. Four-wire generator connections can be made only with a wye-connected generator with the generator neutral either solidly grounded or, more typically, grounded through an impedance. Load distribution is made at generator voltage rather than being separated from the generator by a

Copyright ASME International
Provided by IHS under license with ASME
No reproduction or networking permitted without license from IHS
Not for Resale

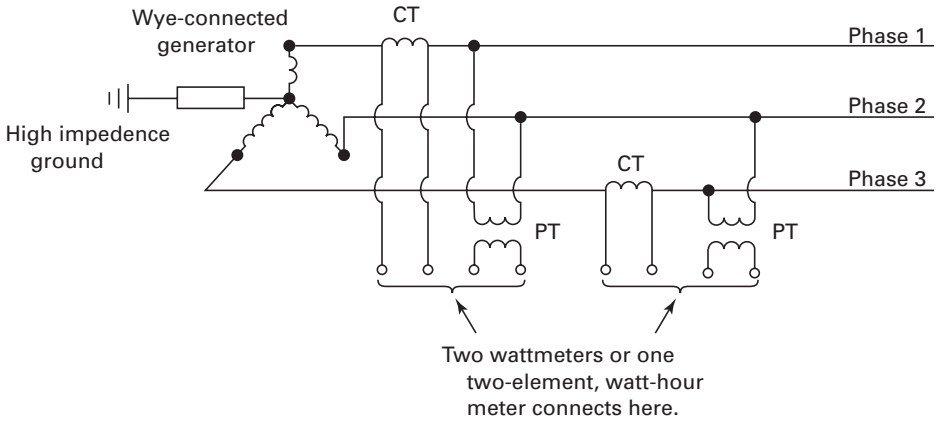

Fig. 4-2(a) Wye Generator–3-Phase, 3-Wire

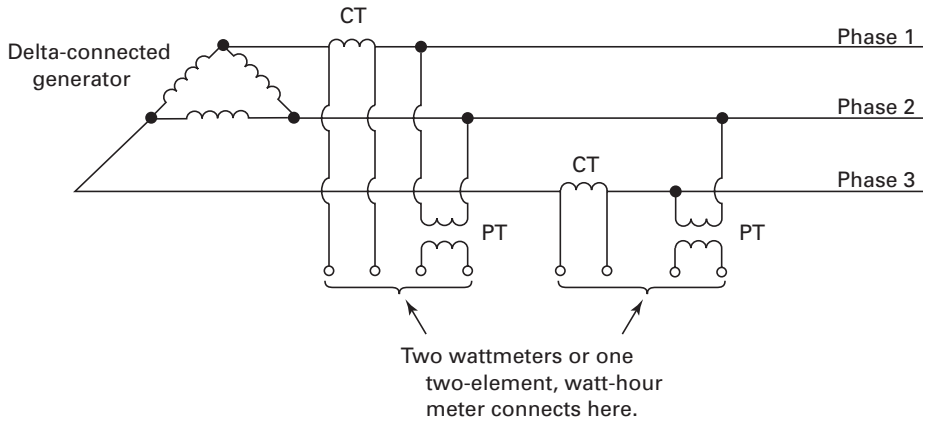

Fig. 4-2(b) Delta Generator–3-Phase, 3-Wire

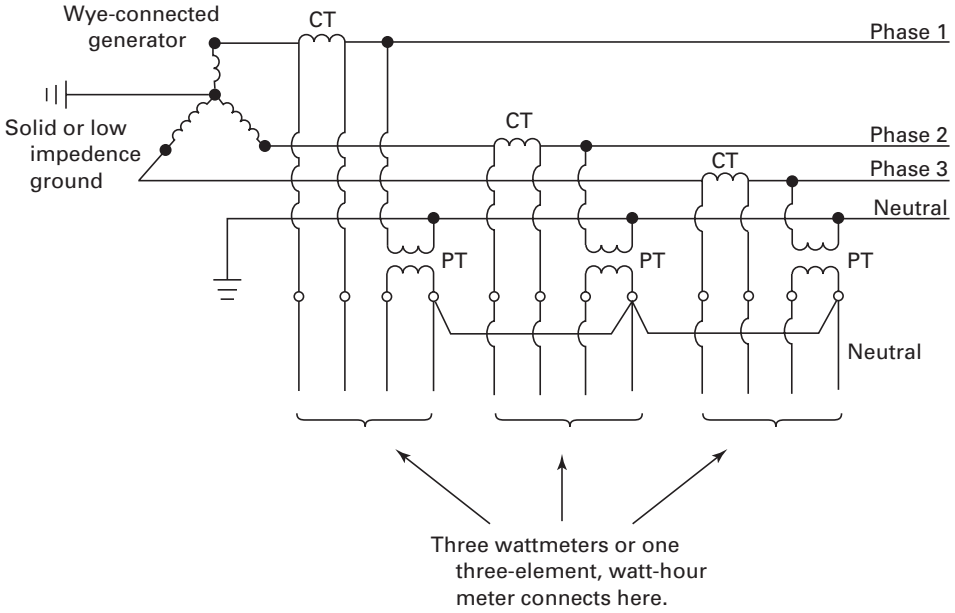

Fig. 4-2(c) Wye Generator–3-Phase, 4-Wire

Copyright ASME International
Provided by IHS under license with ASME
No reproduction or networking permitted without license from IHS
Not for Resale

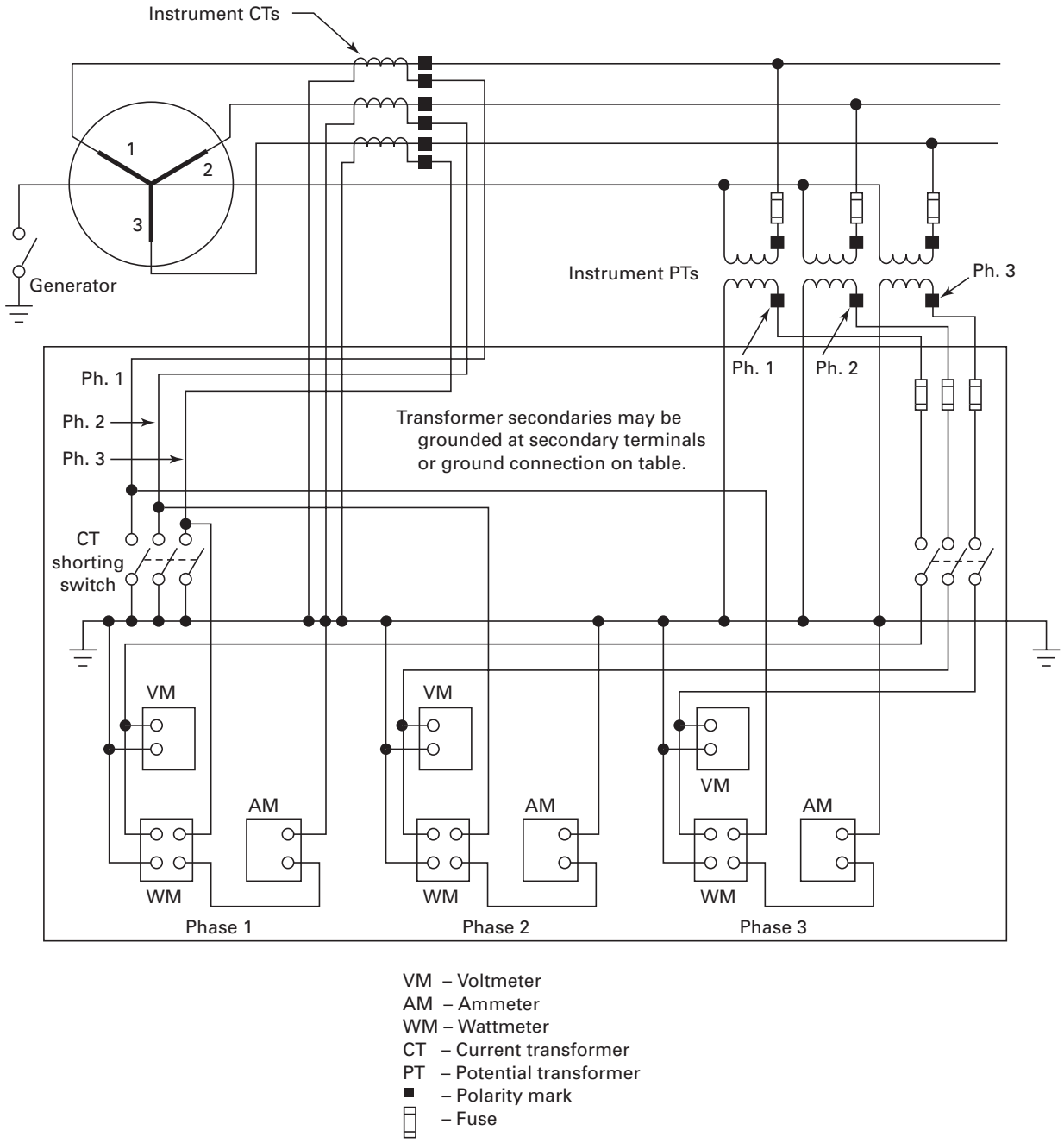

Fig. 4-2(d) Typical Connections for Measuring Electric Power Output by the Three-Wattmeter Method

delta-wye transformer. This type of connection has a separate fourth conductor, which directly connects the generator neutral (or neutral grounding device) with the neutral of the connected loads [see Fig. 4-2(c)].

For the generating system connections described in the preceding paragraphs, accurate metering will be provided under all conditions of load power factor and load unbalance by application of the recommended metering methods, which were described in para. 4-4.2.

A typical instrument connection diagram is shown on Fig. 4-2(d).

4-4.5 Alternative Metering Connection Methods

Alternative metering methods that may be used by mutual agreement between all test parties are described in PTC 6 Report. However, the uncertainty of the power measurement with the alternative metering methods

Copyright ASME International
Provided by IHS under license with ASME
No reproduction or networking permitted without license from IHS
Not for Resale

will be greater than that of the recommended metering methods.

4-4.6 Meter Connections

Connections for voltage and current measuring instruments shall be made on the generator side of the step-up transformer(s) as close to the generator terminals as possible. Current connections shall be made on the generator side of any external connections of the power circuit by which power can enter or leave this circuit.

4-4.7 Excitation Power Measurement

If the excitation or auxiliary systems receive power from the generator, then either it must be separately metered or the generator power metered beyond the excitation connections but ahead of any auxiliary power connections.

Electrical power separately supplied to produce either excitation or any other service to the turbine generator unit, not specifically covered by agreement of the parties to the test, shall be measured at the point of supply to the auxiliary apparatus producing the excitation or other service.

4-4.8 D-C Generator Power Measurement

Power output of D-C generators shall be measured by the D-C voltmeter-ammeter method. Connections for voltage and current measuring devices shall be made on the generator side of any connections to the power circuit by which power can enter or leave this circuit and as close to the generator terminals as physically possible.

4-4.9 Guidance for Power Measurement

ANSI/IEEE Std 120, Master Test Guide for Electrical Measurements in Power Circuits, contains detailed information on the construction and use of electrical measurement equipment and instructions for measurement of electrical quantities.

4-5 A-C GENERATOR TEST INSTRUMENTS

4-5.1 Test Instruments

Active power or energy (kilowatts/kilowatt hours) shall be measured by random watt/watthour meters (uncertainty of $\pm$ 0.10% of reading for power factors $\geq$ 0.8). The reactive power (kilovars) shall be measured either by a var transducer (uncertainty of $\pm$ 0.20% of range) or calculated from measurements of voltage and current. The active power, and either voltage and current, or the reactive power of each required phase, as described in paras. 4-4.2 through 4-4.4, shall be measured.

As an alternative to active and reactive power measurements of each phase, polyphase random watt/watthour transducers and polyphase random var/varhour transducers may be used. For four-wire generator connections, three-element polyphase transducers are required. For three-wire generator connections, two-element polyphase transducers may be used. The metering uncertainty with the polyphase transducers must be equivalent to the combined metering uncertainty of the single-phase meters and calibrated per para. 4-7.2.

As noted in para. 4-1.6, any power measuring device with digital outputs should not use analog converters for signal transmission to data loggers.

The power output measurement instruments shall be calibrated before and after the tests. The laboratory(ies) and standard(s) used for the calibrations shall be mutually agreed upon by the parties to the test. It is required that the instruments have their best operating characteristics over the range of values that will occur during the tests.

Extreme care must be exercised in the transportation of calibrated portable instruments. The instruments should be located in an area as free of stray electrostatic and magnetic fields as possible. Where watthour meters are used, a suitable timing device shall be provided to accurately determine the times for the number of disc revolutions or pulse counts recorded during the predetermined test time period, to one part in four thousand.

4-5.2 Instrument Transformers

Correctly rated current and potential transformers of the 0.3% accuracy class (metering type) shall be used for the tests. Transformers shall be calibrated for ratio and phase angle prior to the test over the ranges of voltage, current, and burden expected to be experienced during the test. Burdens shall be determined from instrument nameplate data and by measurement of lead resistance, or by measurement of the volt-amperes or secondary impedance, and must be constant during the test. Protective relay devices or voltage regulators shall not be connected to the instrument transformers used for the test. Normal station instrumentation may be connected to the test transformers if the resulting total burden is known and is within the range of calibration data.

4-5.2.1 Precautions for Current Transformers. Current transformer cores may be permanently magnetized by inadvertent operation with the secondary circuit opened, resulting in a change in the ratio and phase-angle characteristics. If magnetization is suspected, it should be removed by procedures described in ANSI/IEEE Std 120, under "Precaution in the Use of Instrument Transformers."

4-5.2.2 Precautions for Potential Transformers. Potential transformers may have either one or two secondary windings; however, one secondary winding is

Copyright ASME International
Provided by IHS under license with ASME
No reproduction or networking permitted without license from IHS Not for Resale

the most common arrangement. If potential transformers with two secondary windings are used, the total burden on the two secondary windings must be less than or equal to the total allowable burden of the two windings, and the burden on each winding must be less than or equal to the allowable burden of each winding. Failure to observe the above precautions will introduce increased uncertainty in the measurement of electrical potential.

4-5.3 Instrument Connections

Test instruments shall be connected into the lines from the generator as near to the generator terminals as practical and on the generator side of any external connections by which power can enter or leave the generator circuit. Instruments should be connected as shown on connection diagrams given in ANSI/IEEE Std 120. Guidance on the use of computer-compatible instruments is provided in PTC 19.22, Digital Systems.

The leads to the instruments shall be arranged so that inductance or any other similar cause will not influence the readings. Inductance may be minimized by utilizing twisted and shielded pairs for instrument leads. It is desirable to check the whole arrangement of instruments for stray fields.

The wiring influence of the voltage circuit shall not cause a significant error in the measured power output. Wire gauge shall be chosen considering the length of wiring and a given load of the potential transformers, taking into account the resistance of the safety fuses to be used in the voltage circuit. The errors due to wiring resistance (including fuses) shall always be taken into account.

4-5.4 Excitation and Auxiliary Service

Test instruments for measurement of the excitation and auxiliary power services shall be the same type as described in para. 4-5.1 above.

4-6 D-C GENERATOR TEST INSTRUMENTS

4-6.1 Instruments

Portable indicating D-C ammeters (with shunts if required) and D-C voltmeters of the 0.25% accuracy class shall be used. Ammeter shunts shall be calibrated prior to installation.

Typical instrument locations are shown in Figs. 4-2(e) through 4-2(g) for a direct current series generator, a direct current shunt generator, and a direct current short-shunt compound generator, respectively. The power output and efficiency of each of the three types of direct current generators are calculated as follows.

D-C Series Generator and D-C Shunt Generator:

$$P_E = (I_L \times E_F) + (I_L \times E_A)$$

$$P_o = I_L \times E_L$$

$$\eta_{Gen} = (1 - [(P_E + P_M)/(P_E + P_M + P_o)]) \times 100$$

D-C Short-Shunt Compound Generator:

$$P_E = (I_{Sh\ Fld} \times F_{Sh\ Fld}) + (I_A \times E_A) + (I_L \times E_{Series\ Fld})$$

$$P_o = I_L \times E_L$$

$$\eta_{gen} = (1 - [(P_E + P_M)/(P_E + P_M + P_o)]) \times 100$$

where

P_E = power expended in generator
P_M = mechanical power loss = windage and bearing loss
P_o = power output
η_{gen} = generator efficiency
I_L = load current
$I_{\text{Sh Fld}}$ = shunt field current
I_A = armature current
E_F = field voltage
E_A = armature voltage
E_L = load voltage
$E_{\text{Sh Fld}}$ = shunt field voltage
$E_{\text{Series Fld}}$ = series field voltage

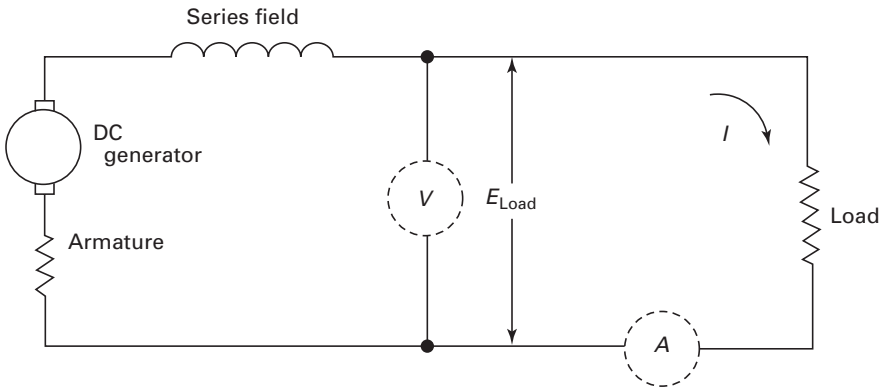

Fig. 4-2(e) Direct Current Series Generator

Copyright ASME International
Provided by IHS under license with ASME
No reproduction or networking permitted without license from IHS
Not for Resale

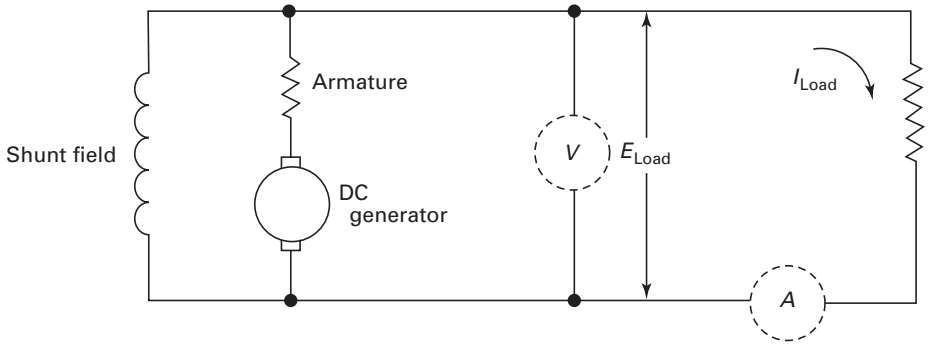

Fig. 4-2(f) Direct Current Shunt Generator

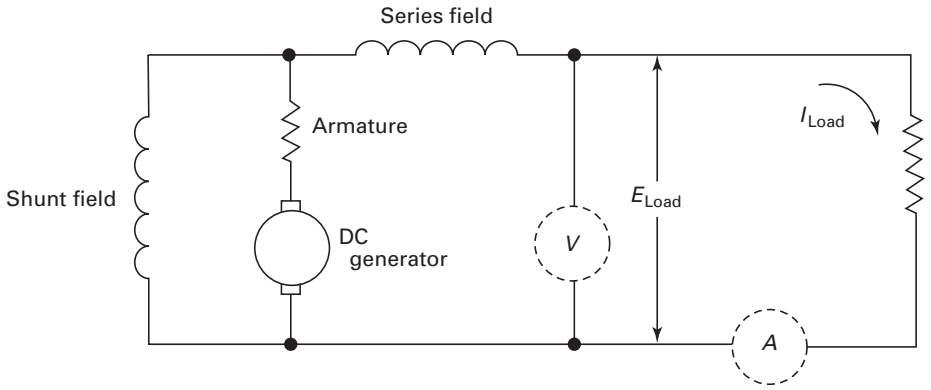

Fig. 4-2(g) Direct Current Short-Shunt Compound Generator

4-6.2 Excitation and Auxiliary Service

Test instruments for measurement of the excitation and auxiliary power services may be of the switchboard type if their contribution to the test uncertainty will be fewer than ±0.03%. Otherwise, portable instruments of the 0.25% accuracy class shall be used.

4-7 CALIBRATION OF ELECTRICAL INSTRUMENTS

4-7.1 Standards

The electrical test instruments used for measuring the gross electrical output of the generator shall be calibrated against secondary standards traceable to a recognized national standards laboratory, such as the National Institute of Standards and Technology, under laboratory conditions that approximate the expected test site conditions.

4-7.2 Procedures

Electrical test instruments shall be calibrated immediately before and after the turbine generator test series. Portable instruments shall be calibrated in a laboratory. The value of the voltage maintained on the potential circuit of the instruments during calibration shall cover the range of expected test values. Switchboard instruments, if used by mutual consent of all test parties, shall be calibrated in place. Polyphase meters, or metering systems which cannot be verified to be separate single-phase meters, shall not be used unless they can be calibrated three phase.

4-8 PRIMARY FLOW MEASUREMENT

4-8.1

The accurate determination of primary flow to the turbine is necessary to compute turbine heat rate or steam rate if the results are to be considered as a basis for turbine acceptance. Recognizing the limitations presented herein, this Code recommends measurement of water flow in the feedwater cycle. Extreme care must be taken to obtain the high order of accuracy necessary in primary water-flow measurement. Any deviation from the requirements set forth in the following paragraphs may result in an increase in uncertainty. All known errors must be reduced so that their individual effect is less than 0.05% of the primary flow to be measured.

Copyright ASME International
Provided by IHS under license with ASME
No reproduction or networking permitted without license from IHS
Not for Resale

4-8.2 Measurement of Water Flow

While weighing of water can be the most accurate method of measuring flow, it is seldom practical or economical to employ weigh tanks or volumetric tanks for testing of the large units installed in modern power plants. The usual method of determining flow is with a differential pressure producing device. Two sets of pressure taps and a differential pressure instrument for each set of taps will be used.

4-8.3 Recommended Method

Excellent results have been obtained using low-beta-ratio throat-tap nozzles, and, for this reason, this Code recommends that they be used. The stringent requirements for the recommended primary flow device contained in this Code are based on experience with the low-beta-ratio throat-tap nozzles installed in 4 in. to 28 in. flow sections. Larger flow sections may be used provided they can be calibrated in accordance with paras. 4-8.13 and 4-8.14.

4-8.4 Flow Section

Throat-tap nozzles are recommended for measurement of primary flow provided they comply with the following requirements:

(a) The beta-ratio (d/D) is limited to the range of 0.25 to 0.50.

(b) The test flow section shall be calibrated (see paras. 4-8.13, 4-8.14, and 4-8.15). The flow section is comprised of the primary element, including the diffusing section, if used, and the upstream and downstream pipe sections. The upstream pipe section shall be a minimum of 20 diameters of straight pipe and include a flow straightener installed at least 16 pipe diameters upstream of the primary element.

The preferred flow straightener utilizes a low-pressure drop perforated or tubed plate with a nonuniform hole distribution. The geometry of the design is shown in Fig. 4-5, and hole coordinates are specified in Table 4-1. The design and hole coordinates are identical for both the perforated and tubed plate straightener. The upstream side of the holes must be beveled in all cases. The straightener is located between 2 and 4 diameters downstream of the test flow section inlet, as shown in Fig. 4-3(a).

Table 4-1 Hole Coordinates for Perforated or Tubed Plate

No.	X-axis	Y-axis
1	0	0
2	0	0.142 D
3	0	0.283 D
4	0	0.423 D
5	0.129 D	0.078 D
6	0.134 D	0.225 D
7	0.156 D	0.381 D
8	0.252 D	0
9	0.255 D	0.146 D
10	0.288 D	0.288 D
11	0.396 D	0
12	0.400 D	0.151 D

GENERAL NOTE: (D: pipe inside diameter).

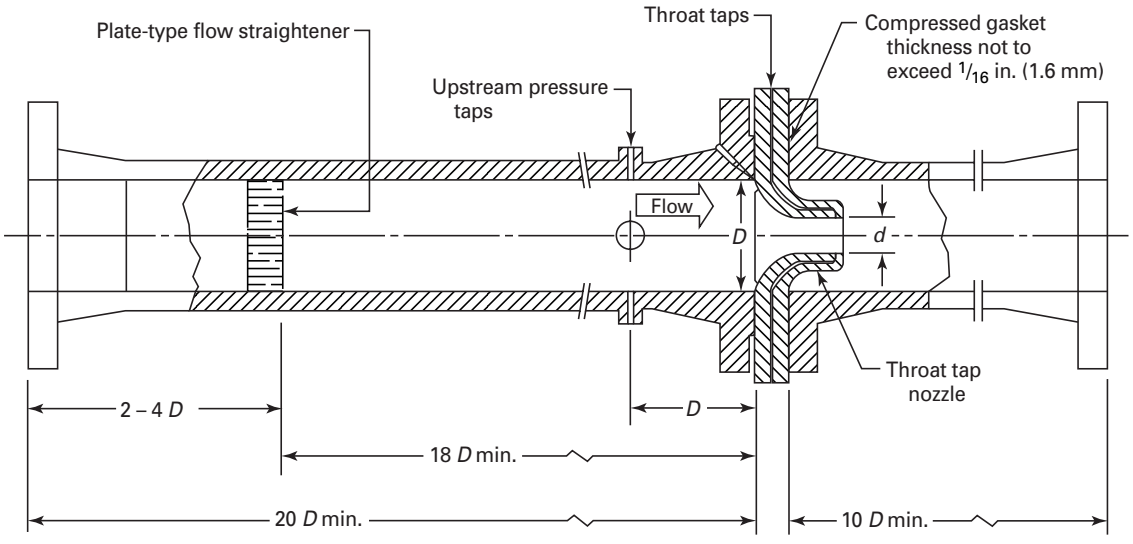

GENERAL NOTE: No obstruction, such as thermocouple wells, backing rings, etc., are permitted.

Fig. 4-3(a) Primary Flow Section With Plate-Type Flow Straightener (Recommended)

Copyright ASME International
Provided by IHS under license with ASME
No reproduction or networking permitted without license from IHS
Not for Resale

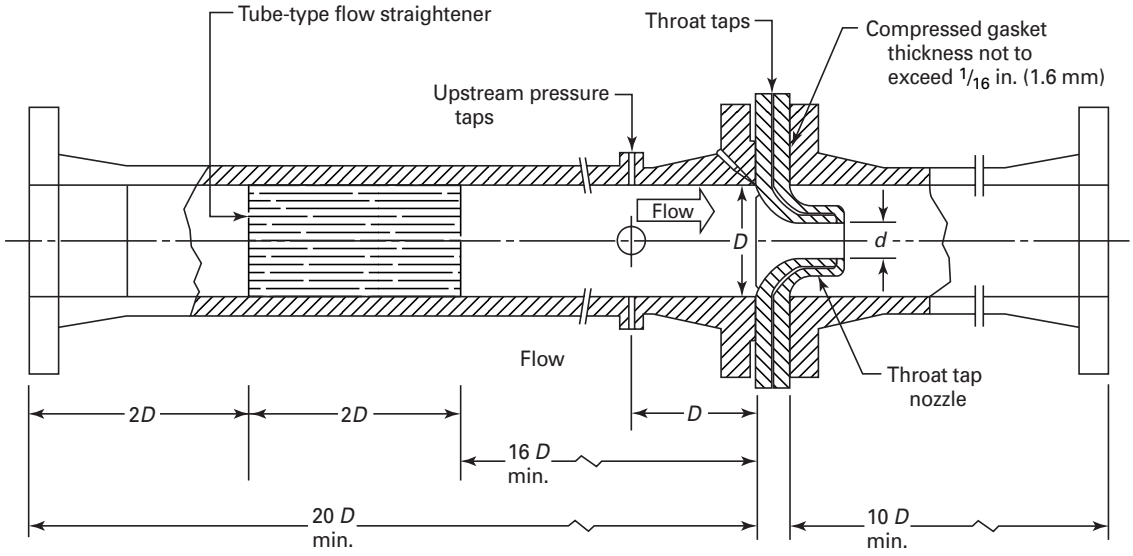

GENERAL NOTES:

(a) No obstruction, such as thermocouple wells, backing rings, etc., are permitted.

(b) These figures are diagrammatic and not intended to represent details of actual construction.

Fig. 4-3(b) Primary Flow Section With Tube-Type Flow Straightener

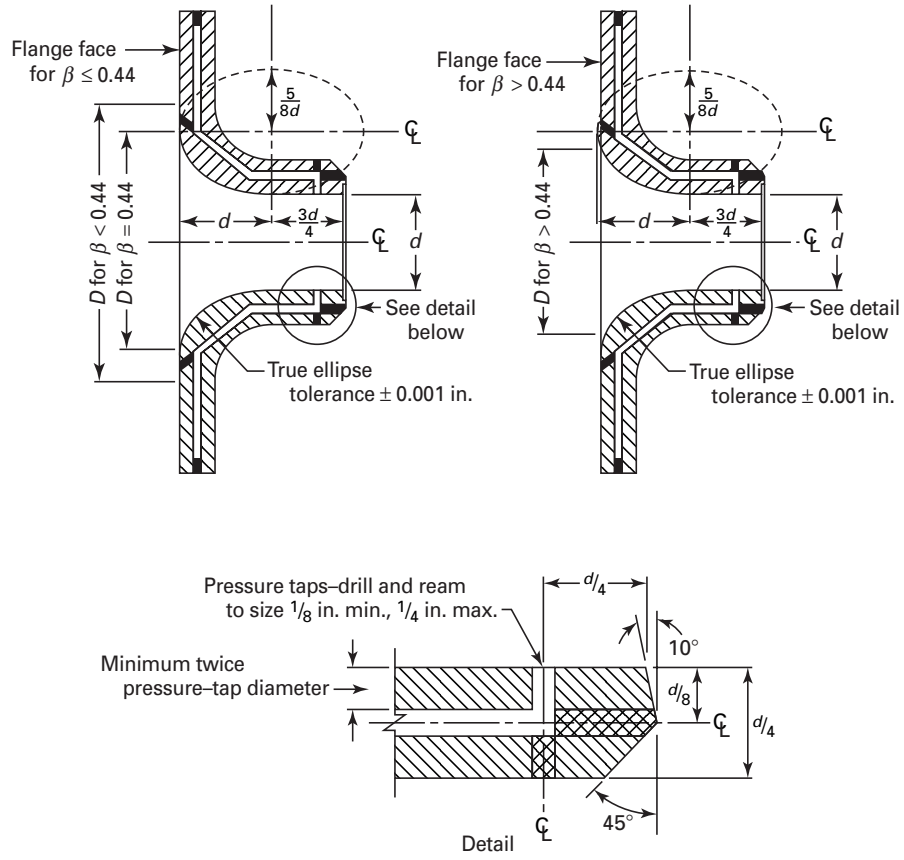

Fig. 4-4 Throat-Tap Flow Nozzle

Copyright ASME International
Provided by IHS under license with ASME
No reproduction or networking permitted without license from IHS
Not for Resale

An alternative is a perforated-plate flow straightener, as shown in PTC 19.5, Flow Measurement. However, because it is likely to have a higher pressure drop, there is an increased chance of cavitation in the nozzle during calibration, which may limit the maximum Reynolds Number achieved.

Another acceptable design, utilizing a bundle of at least 50 tubes 2D long (see Fig. 4-3(b)), has been used extensively.

Other types of flow straighteners may be used if their ability to remove swirl and distortion from the upstream flow has been demonstrated.

(c) The primary flow element and its flow section shall be known to be clean (see para. 4-8.18) and undamaged throughout the test period. This shall be determined by inspection as soon as possible before and after the test. The location of the primary flow section in the cycle, its physical configuration, and the technique that is employed to obtain the flow measurements are critical and discussed in subsequent paragraphs.

4-8.5

PTC 19.5 contains a description of the low-beta-ratio throat-tap nozzle; however, additional information is included in the following paragraphs that applies specifically to throat-tap nozzles used for steam turbine testing. PTC 19.5 also contains procedures for calculating the flow of water through a throat-tap nozzle using measured values of pressure differential between an inline set of upstream and throat taps.

4-8.6 Design and Manufacture

Because of the high degree of accuracy necessary, the following requirements are given in regard to the design and manufacture of throat-tap nozzles for primary flow measurement. Fig. 4-4 of this Code and PTC 19.5 show examples of long-radius, low-beta-ratio nozzle shapes with throat taps that satisfy these requirements. It is recommended that this nozzle be manufactured with four throat taps, located 90 deg apart.

Great care must be taken in the manufacture and inspection of throat-tap nozzles, particularly in regard to the geometry of the nozzle and downstream pressure taps; otherwise, difficulties meeting the calibration criteria may occur. This is particularly true when the flow section is welded together, since problems with calibration will not be evident until after the nozzle has been welded into the upstream and downstream pipe sections. Any required rework of the nozzle would obviously be much more difficult than with a flanged construction.

4-8.7

The entrance provided by the low-beta-ratio profile gives a favorable pressure gradient so that the boundary layer will be very thin in the throat section and there will be no flow separations. The area in the plane of the throat taps shall be used in the coefficient calculation. The nozzle shall be made from a corrosion-resistant material with known thermal expansion coefficient, and its surface shall be free of all burrs, scratches, imperfections, or ripples. The surface should be either "hydraulically smooth" or 16 μ in., whichever is smoother. For turbulent boundary layers, the surface is "hydraulically smooth" when protuberances are contained within the laminar sublayer. Figure 4-6 presents the surface finish necessary to be hydraulically smooth as a function of throat diameter and the maximum throat Reynolds number achieved during either test or calibration.

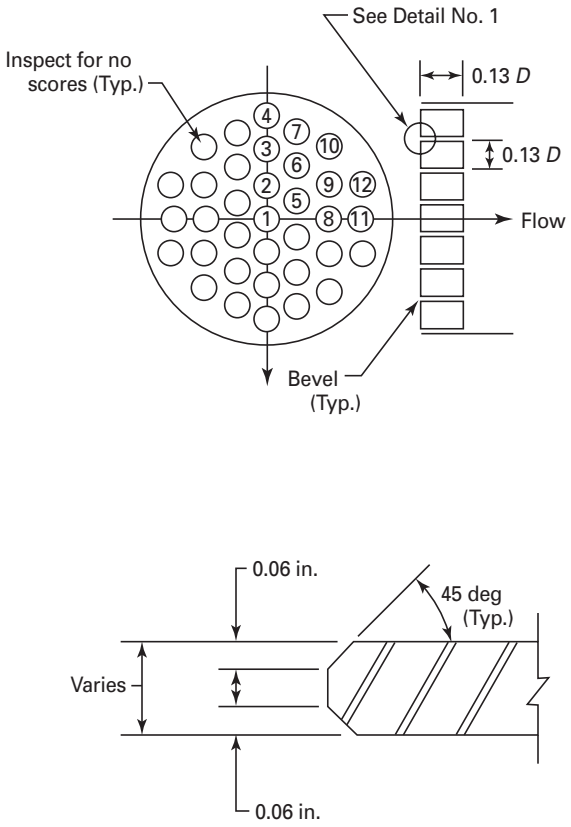

GENERAL NOTE: This figure is diagrammatic and is not intended to represent details of actual construction.

Fig. 4-5 Perforated or Tubed Plate Flow Straightener With Nonuniform Hole Distribution

4-8.8

To minimize instrument systematic error, the nozzle throat diameter should be selected to give the maximum deflection possible, considering both the available pumping head and instrument range. The transducer or

Copyright ASME International
Provided by IHS under license with ASME
No reproduction or networking permitted without license from IHS
Not for Resale

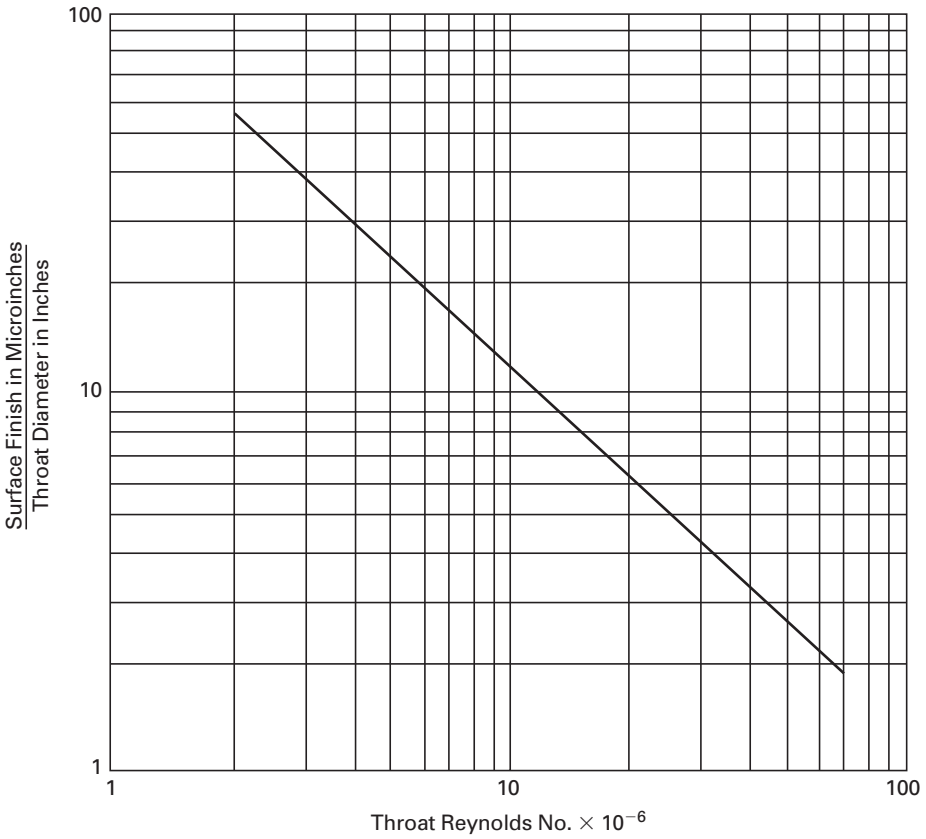

Fig. 4-6 Throat-Tap Nozzle Required Surface Finish to Produce a Hydraulically Smooth Surface

manometer range should be selected to allow for fluctuations and maximum flow which may be encountered. The nozzle shall not be used to measure flow when the differential pressure is fewer than 1000 times the reading error, or 2.5 psi (17.2 kPa), whichever is larger. When it is necessary to measure flow over a larger range than can be obtained by complying with this requirement, it is permissible to use additional nozzles with different throat diameters. These nozzles should be sized so that one of the test points can be run with each nozzle.

When measuring large flows, the nozzle is sometimes sized to give large pressure differentials with correspondingly large unrecoverable losses. A large pressure drop may prevent normal operation of the plant and will represent a penalty in cycle efficiency, which may be unacceptable if the nozzle is to be installed for a significant period of time. This loss can be reduced by about 70% by installing a diffuser downstream of the nozzle as shown in Fig. 4-7a. This figure is for a typical diffusing cone installation showing flow-path requirements and not intended to show details of mechanical design. A cylindrical section of length $d/2$ preceding the diffuser is necessary in order not to change the flow coefficient. Care should be taken to see that the cylindrical section of the diffusing element does not protrude into the flow from the throat of the nozzle and that the gap between nozzle and cylindrical section is fewer than 0.050 in. The calibration must be made with the diffusing section in place. It is recommended that the diffuser material have the same expansion characteristics as the nozzle.

A secondary benefit of a diffusing cone may occur during calibration. With a reduced unrecoverable pressure loss, the calibration facility may be able to achieve a higher Reynolds number.

4-8.9 Pressure Taps

The pressure taps shall be between $^1/_8$ in. (3 mm) and $^1/_4$ in. (6 mm) in diameter and at least two pressure-tap diameters deep. They shall be machined perpendicular to the surface, have sharp corners, and be free from burrs and scratches. The downstream pressure taps shall be machined in the throat of the nozzle in order to decrease the effect of downstream disturbances on this pressure measurement. They shall be drilled and reamed previous to the final boring and polishing of the throat. A plug with a press fit is then inserted in the hole. The final boring and polishing operation should

Copyright ASME International
Provided by IHS under license with ASME
No reproduction or networking permitted without license from IHS
Not for Resale

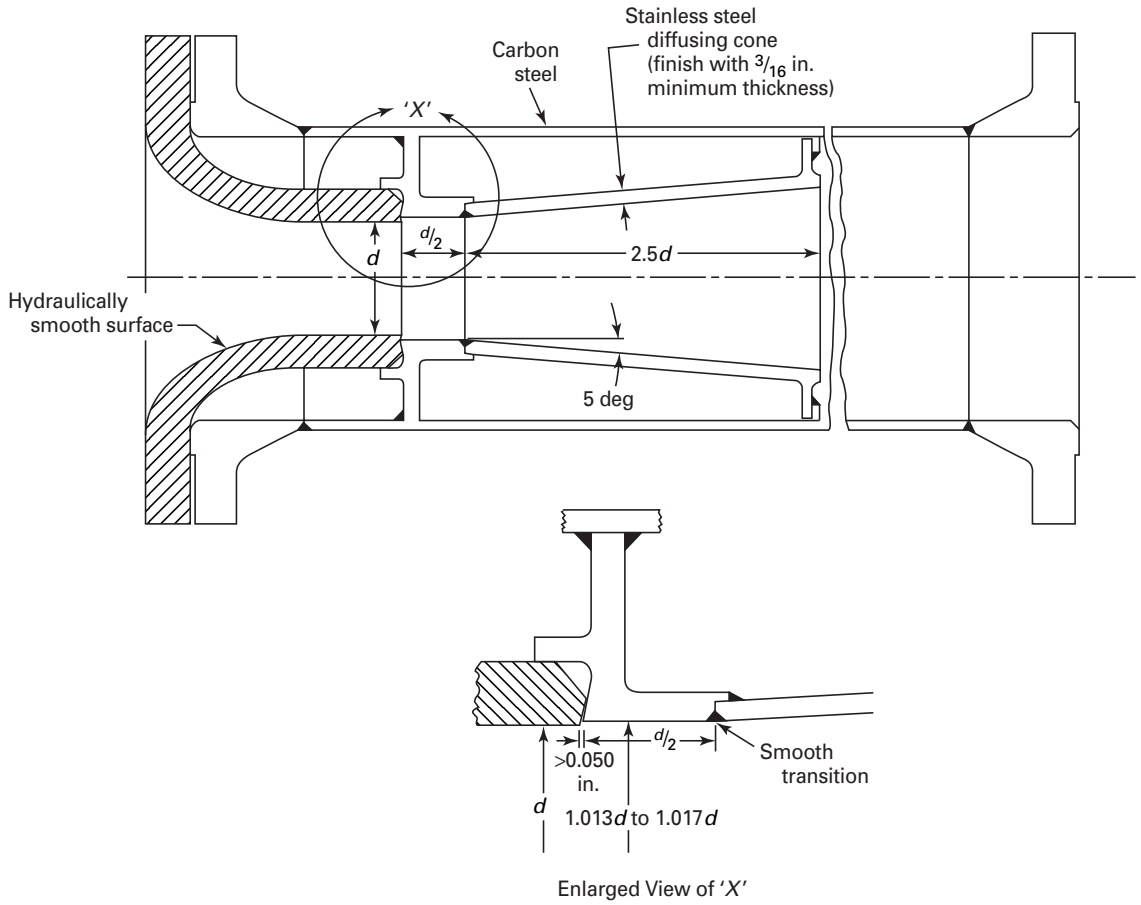

Fig. 4-7(a) Throat-Tap Nozzle With Optional Diffusing Cone

be done after the insertion of the plug. The plug should be made with provisions for pulling it out of the hole after the polishing and machining is completed. After removal of this plug, any slight burr that might be left on the edge of the hole may be removed by using a tapered piece of hardwood, such as maple, to roll around the tap edges. The upstream taps shall be carefully made and located one inside-pipe diameter upstream from the nozzle entrance.

4-8.10 Pipe Section

The pipe on either side of the flow nozzle shall be smooth, and free from rust, scale, and blisters. For the upstream pipe section, the inside diameter measured at four points at any cross-section shall not differ by more than 0.2%. The average inside diameter at different cross-sections shall not differ by more than 1%. The allowable variations in inside diameter for the downstream pipe shall be twice those for the upstream pipe section (see Fig. 4-7(b)).

The upstream pipe must be machined cylindrical within ±0.005 in. or ±0.0005 in. per inch of pipe diameter, whichever is greater, with minimum removal of metal for a length of at least four pipe diameters, and then tapered at 3.5 deg to the remaining pipe inside diameter.

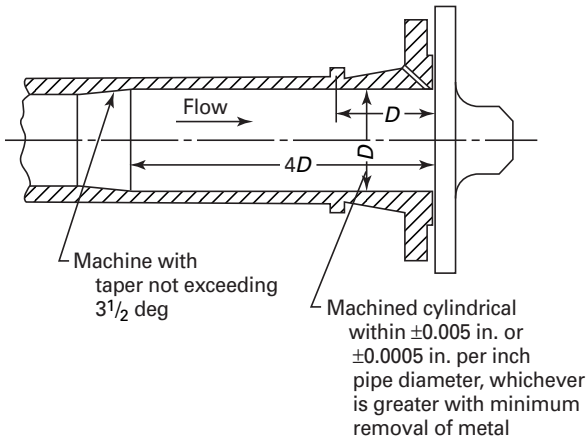

Fig. 4-7(b) Boring in Flow Section Upstream of Nozzle

Copyright ASME International
Provided by IHS under license with ASME
No reproduction or networking permitted without license from IHS
Not for Resale

4-8.11 Flanged Assemblies

Flanged assemblies are normally used with relatively low pressures, such as when the flow element is in the condensate line upstream of the main feed pump. This arrangement is associated with the recommended procedure for the full-scale test. The flow nozzle shall be centered in the pipe within $^1/_{32}$ in. (0.8 mm) of the pipe axis.

If the flow section is downstream of the main feed pumps where it is subject to high-pressure levels, flanges should conform with the pressure-temperature rating in ANSI B16.5, Pipe Flanges and Flanged Fittings: NPS through NPS 24. Considerations, such as the cost of the flanges, the cost of moving them into place, and the added cost of pipe hangers, may make it desirable to use a welded assembly (see para. 4-8.12).

When the flow section is assembled with flanged connections, the pipe joints at the flow nozzle shall have the inner bores square with the faces of the flanges. The gap between the nozzle and pipe flanges shall not exceed $^1/_{16}$ in. (1.6 mm). The gaskets shall not extend within the pipe.

Flanges adjacent to the nozzle should be provided with dowels or other means to ensure that all components of the complete flow section are always assembled in exactly the same relative locations as when it was calibrated. Some methods of manufacture may subject the nozzle throat to distortion due to thermally induced stress. This could be caused by the difference in linear expansion coefficients for the different materials of the components. To reduce the possibility of thermal distortion of the nozzle, it is desirable that the pipe and flanges of the flow section adjacent to the nozzle be made of a material having the same coefficient of expansion as the nozzle.

To avoid damage to the nozzle during flushing that normally precedes the initial startup of the plant, it is recommended that the flow section be installed after flushing.

4-8.12 Welded Assembly

If the flow section is downstream of the main feed pumps where it is subject to high-pressure levels, it may be welded together and then be welded in the station piping after the piping has been flushed. A typical of such flow section is shown in Fig. 4-8. To meet the requirement of inspecting the nozzle both before and after a test, a welded flow section shall include a plugged inspection port immediately upstream of the nozzle. The orientation of the inspection port will be determined by the ease of inspection, ease of cleaning, and other design considerations. An example of such an inspection port is shown in Fig. 4-9. The inside diameter of the inspection port should be at least 4 in. (100 mm) to allow easy access and nozzle cleaning if required.

The inspection device (typically a fiber optic device) shall not damage the sharp edges of the inspection hole or the surface of the nozzle, particularly around the taps. The plug must be undamaged, and the contour of the plug must be properly aligned to preserve the flow profile of the water. A plug radial clearance of up to $^1/_{32}$ in. (0.8 mm) will be acceptable. A recess (i.e., distance from the end of the plug to the inside diameter of the pipe) of up to $^1/_{32}$ in. (0.8 mm) is acceptable. The plug must not protrude into the pipe.

For flow sections welded into the feedwater pipe, the flow nozzle must be constructed of a corrosion resistant material if the pipe is subject to chemical cleaning. The cleaning of the flow test section can be accomplished by the use of very high-pressure water jet devices. In the design of the plant, the design of available cleaning devices should be reviewed, and the practicality of performing the cleaning through the inspection port should be evaluated. It may be advisable to install a special port downstream of the downstream pipe section specifically for the introduction of a high-pressure water leaning device.

If, after installation, inspection reveals damage to the flow nozzle or its throat taps, such damage may be

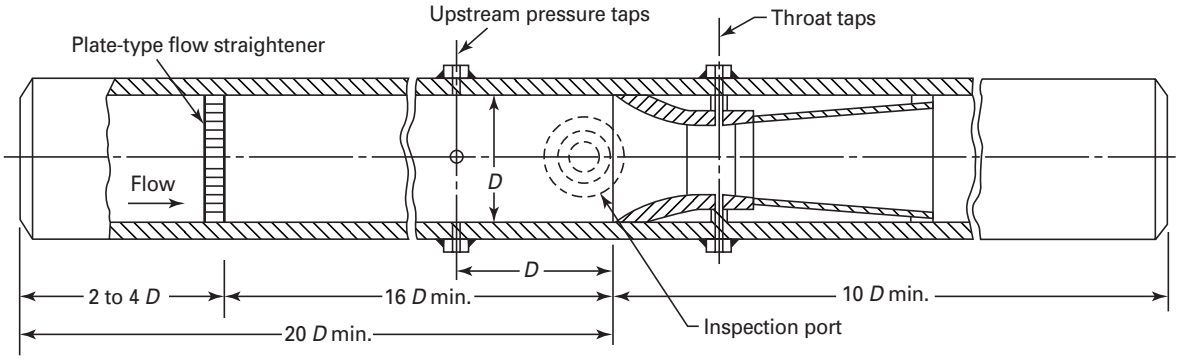

GENERAL NOTE: This figure is diagrammatic and not intended to represent details of actual construction.

Fig. 4-8 Primary Flow Section for Welded Assembly

Copyright ASME International
Provided by IHS under license with ASME
No reproduction or networking permitted without license from IHS
Not for Resale

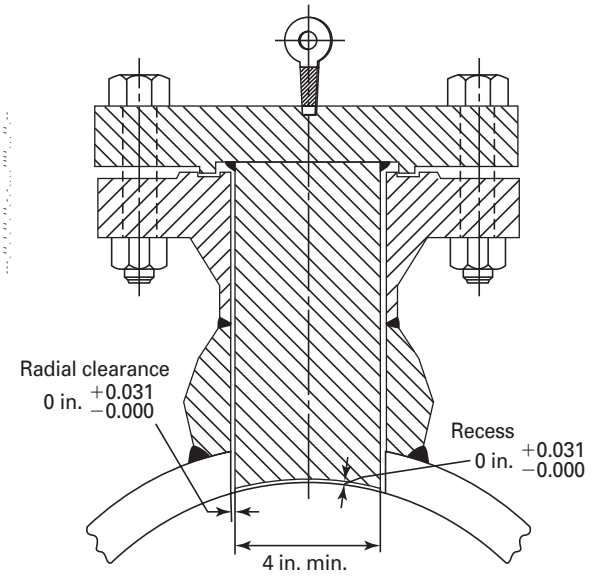

GENERAL NOTE: The orientation of the access port on the pipe is determined by the designer (see para. 4-8.12).

Fig. 4-9 Inspection Port Assembly

remedied through the access provided by the inspection opening. This would depend on the type and extent of the damage and call for consultation and agreement between the parties to the test.

Precaution should be taken to avoid nozzle throat distortion in service due to use of materials with dissimilar thermal expansion characteristics.

4-8.13 Calibration

Experience shows that the coefficient of discharge for a particular flow section cannot be satisfactorily predicted to meet Code uncertainty objectives, and, therefore, it is necessary to calibrate each flow section. This calibration should be undertaken only at recognized facilities under conditions similar to those in the actual installation. Care must be exercised in the selection of the calibration facility and analysis of the calibration data to ensure that the single-point accuracy necessary to establish the slope of the calibration curve is attained. The physical construction of the piping in the calibrating setup should be similar to that in the test setup from the standpoint of pipe configuration, immediately upstream and downstream of the flow-measuring section. Also, the Reynolds number, water temperature, and other flow conditions should be as close to test conditions as possible. The calibration should preferably consist of at least 20 acceptable points over a wide range of Reynolds numbers. If repeat calibration points at the same Reynolds number differ by more than 0.1%, an additional calibration point at the same Reynolds number is recommended. When it is not possible to calibrate at test Reynolds number, it is permissible to extrapolate the calibration curve as described in para. 4-8.16. Since the effect of the transition region becomes increasingly smaller as Reynolds number rises, this Code recommends that the value of the coefficient be established at highest Reynolds number possible so that this effect is minimal. All four tap sets should be calibrated. For the test, select the two tap sets that most closely comply with first, the calibration criteria (see paras. 4-8.13, 4-8.14, and 4-8.15) and second, the guidelines in Fig. 4-13. Each selected tap set shall be instrumented individually. If the calibration of the flow section does not comply with para. 4-8.14, the nozzle should be carefully inspected as described in para. 4-8.7, and corrected, if necessary, and the flow section recalibrated. If the recalibration still does not comply with para. 4-8.14, the flow section should again be recalibrated using different facilities. In the event different facilities are not available, the parties to the test must agree on the course of action before the test is started.

4-8.14

Compliance with the requirements of paras. 4-8.4 through 4-8.12 is determined by the shape of the coefficient of discharge, C, versus Reynolds number curve established by calibration. For each set of selected taps, the calibration curve (not necessarily each individual point) shall be within 0.25% of the reference curve (see reference curve Fig. 4-10 and Table 4-2) and meet the criteria of para. 4-8.15. The reference curve shown in Fig. 4-10 was derived from a detailed boundary layer analysis and corroborated later by a study yielding the expression given in Table 4-2. The equation, discussed in para. 4-8.15, is a description of the coefficient of discharge, C, of a throat-tap device throughout the entire range of Reynolds numbers of interest.

4-8.15 Evaluation of Laboratory Calibration Data

The recommended method for determining if the calibration data of a throat-tap nozzle is satisfactory, i.e., can be extrapolated parallel to the reference curve as required in para. 4-8.14, is as follows:

Make multiple solutions of an equation of the form $C = C_x - 0.185\ R_d^{-0.2}\ (1 - 361{,}239/R_d)^{0.8}$

This is done by substituting the measured value of the coefficient of discharge of each calibration point with a Reynolds number greater than one million into the above equation as C and evaluating for C_x. Three criteria must be satisfied for the nozzle calibration to be accepted as satisfactory.

4-8.15.1 Average Value. The average value of C_x must equal 1.0054 ± 0.0025 (therefore, $1.0079 \geq C_x \geq 1.0029$).

4-8.15.2 Reynolds Number Independence. The values of C_x must show no dependence on R_d. This is determined by an unconstrained linear regression of C_x

Copyright ASME International
Provided by IHS under license with ASME
No reproduction or networking permitted without license from IHS
Not for Resale

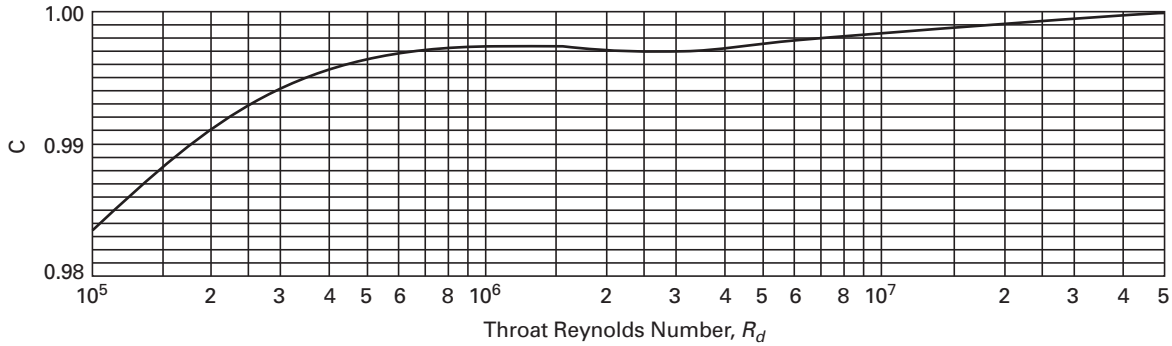

Fig. 4-10 Reference Curve for Nozzle Calibration

(least squares fit) represented by the equation $C_x = a + bR_d$. If the slope of the unconstrained fit, b, is within ±2.7E-10, the values of C_x may be considered R_d independent (or have an acceptable degree of R_d dependence). For further information on this issue, refer to ASME PTC 6A-2000 Appendix to PTC 6 Test Code for Steam Turbine, section 5.

If the flow section is to be used within its calibration range, the curve obtained from the calibration data can be used even if its slope does not meet this Reynolds number independence criterion.

Guidance on performing regression analysis may be found in PTC 19.1, texts on statistical analysis, and IS0 7066-I 1989, "Assessment of Uncertainty in the Calibration and Use of Flow Measurement Devices–Part 1. Linear Calibration Relationships."

4-8.15.3 Scatter of Calibration Data. The confidence interval of the C_x data for 95% confidence level should not exceed 0.0006 (±0.0003 from the regression line of C_x). If this is not achieved with the recommended 20 calibration points, it will be necessary to collect additional calibration points.

If there is excessive scatter in the calibration data, the nozzle should be inspected, reworked, and recalibrated. If scatter is still present, another nozzle shall be used for the test.

Table 4-2 Reference Nozzle Coefficients of Discharge

Throat Reynolds Number in Millions	Coefficient of Discharge, C
1.0	0.9972
2.0	0.9967
3.0	0.9969
4.0	0.9972
5.0	0.9974
6.0	0.9976
8.0	0.9980
10.0	0.9982
20.0	0.9991
30.0	0.9995
40.0	0.9999
50.0	1.0001

GENERAL NOTE: Reference nozzle coefficients of discharge are derived from the expression $C = 1.0054 - 0.185\ R_d^{-0.2}\ [1 - 361{,}239/R_d]^{0.8}$, which reasonably matches the reference curve shown in Fig. 4-10.

4-8.16 Extrapolation

When an extrapolation of calibrated data to higher Reynolds numbers is required, as permitted by para. 4-8.13, that extrapolation shall be made by solving for C at test Reynolds number in the equation in para. 4-8.15 with C_x equal to the average value determined for the set of calibration data being used. This method provides a precise and repeatable means for determining a coefficient of discharge beyond the upper limit of the calibration range.

4-8.17 Transition Region

At low-throat Reynolds numbers, the nozzle boundary layer is laminar; at high-throat Reynolds numbers, it is turbulent. In between these two regions is a zone called the transition region. Figs. 4-10 and Table 4-2 indicate that for Reynolds numbers between 1 and 4 million, nozzle coefficients described in this Code are noticeably affected by the transition of the boundary layer. However, experience has shown that for any given nozzle, coefficients in this region are repeatable within laboratory random. Therefore, the coefficient of discharge in this region is stable and usable for any calibrated nozzle that meets the evaluation criteria in para. 4-8.15. It is recommended that nozzles be sized to produce throat Reynolds numbers beyond this range if possible and extrapolation be performed as described in para. 4-8.16.

4-8.18 Deposits

A slight iron-oxide film on the nozzle surface will usually collect during the test. If film thickness is fewer than 0.0002d, and uniformly deposited, its effect on the uncertainty of the flow measurement will be negligible.

Copyright ASME International
Provided by IHS under license with ASME
No reproduction or networking permitted without license from IHS
Not for Resale

If the thickness of the deposit exceeds this value, or if the nature of the deposit is nonuniform and the surface appears rough, either of two procedures may be followed:

(a) the nozzle may be cleaned using commercial cleaning agents or fine rubbing compounds not harmful to the nozzle and the test repeated; or

(b) the flow measuring section may be recalibrated, and if the calibration change is judged to be insignificant by the parties to the test, they should agree on the action to be taken.

Care must be taken not to disturb the deposit before recalibration. If the calibration is significantly different from the calibration prior to the test, it is necessary that another set of runs be made under deposit-free conditions. The test results cannot be adjusted, since it is usually impossible to determine when the deposit formed on the nozzle. Removable flow sections should be installed, at a practicable time, to minimize the interval between installation and test dates.

4-9 INSTALLATION OF FLOW SECTION

4-9.1 Recommended Cycle Locations

As stated in paras. 1-3.1 and 1-3.2, this Code provides a choice for the location of the primary flow measurement. Variations in flow measurement locations may be used by agreement between the parties to the test provided precautions are taken to eliminate heater leakage and recirculation flows and appropriate instrumentation is installed.

Figures 4-11(a) through 4-11(e) show the location of flow instrumentation in typical cycles. While these diagrams show only single strings of heaters, two or three strings are commonly used with the larger sized turbine-generator units. For cycles of large units and particularly those with nuclear steam supply systems, two or more flow measuring devices may be used in parallel at each primary flow location.

4-9.2 Condensate Flow Section

(a) For units with high-pressure feedwater heaters supplied with superheated extraction steam, see Fig. 4-11(a). If the feedwater cycle has a deaerator, it is recommended that condensate flow entering it be measured as primary flow. This eliminates the possibility of any heater tube leakage recirculating through the flow measuring device.

If the feedwater cycle has no deaerator but does have a heater with pumped-ahead drains immediately upstream of the feedwater pump, it is recommended that the condensate flow entering this heater be measured. Again, there is no possibility of heater tube leakage recirculating through the flow measuring device.

If the feedwater cycle has no deaerator nor pumped-ahead heater drains immediately upstream of the feedwater pump, it is recommended that condensate flow be measured downstream of the low-pressure heaters and upstream of the feedwater pump. If the absence of high-pressure heater leakage is not verified by use of a suitable tracer or other technique, it will be necessary to measure the total drain flow from the high-pressure heaters for comparison with the sum of the extraction flows from these heaters as calculated by heat balance. The difference between these values is the amount of suspected high-pressure heater leakage.

The preceding primary flow locations were selected to improve the accuracy of the measurement by (1) avoiding difficulties associated with use of flanged joints in high-pressure piping, (2) taking advantage of lower water temperatures that minimize the extrapolation of the coefficient-of-discharge curve, and (3) avoiding complications created by possible recirculating flows through the primary flow section.

(b) For units with high-pressure feedwater heaters supplied with wet extraction steam, see Fig. 4-11(b) and (c). If the feedwater cycle has a heater with pumped-ahead drains upstream of the feedwater pump (Fig. 4-11(b)), it is recommended that the condensate and heater drain flows both be measured immediately upstream of the point where they mix and the sum of the two flows be used as primary flow, provided that the absence of heater leakage is verified by use of a suitable tracer technique. Otherwise, the feedwater flow from the highest pressure heater also must be measured for comparison with the primary flow with adjustment for feedwater pump injection and leak-off flows. The difference between these values is the amount of suspected high-pressure heater leakage.

If the feedwater cycle has only heaters with drains cascading to the condenser [Fig. 4-11(c) [Note (1)]], it is recommended that feedwater pump suction flow be measured, provided that the absence of heater leakage is verified by use of a suitable tracer technique. Otherwise, feedwater flow from the highest pressure heater must be measured for determination of suspected water leakage, as in the case of the intermediate pumped-ahead-heater cycle. When measuring feedwater pump suction flow, use of a metering pressure drop that infringes on the pump required minimum NPSH should be avoided.

(c) Before aborting or discarding a test because of suspected high heater leakage (see para. 3-8.10), the isolation of the cycle should be rechecked, calibration curves of the flow measuring devices investigated, and possibility of error in the final feedwater or heater drain flow measurements considered.

4-9.3 Feedwater Flow Section

The primary flow measuring device is installed, perhaps welded, in the feedwater line, downstream of the highest pressure heater, so that it directly measures feedwater flow to the steam generator.

Copyright ASME International
Provided by IHS under license with ASME
No reproduction or networking permitted without license from IHS
Not for Resale

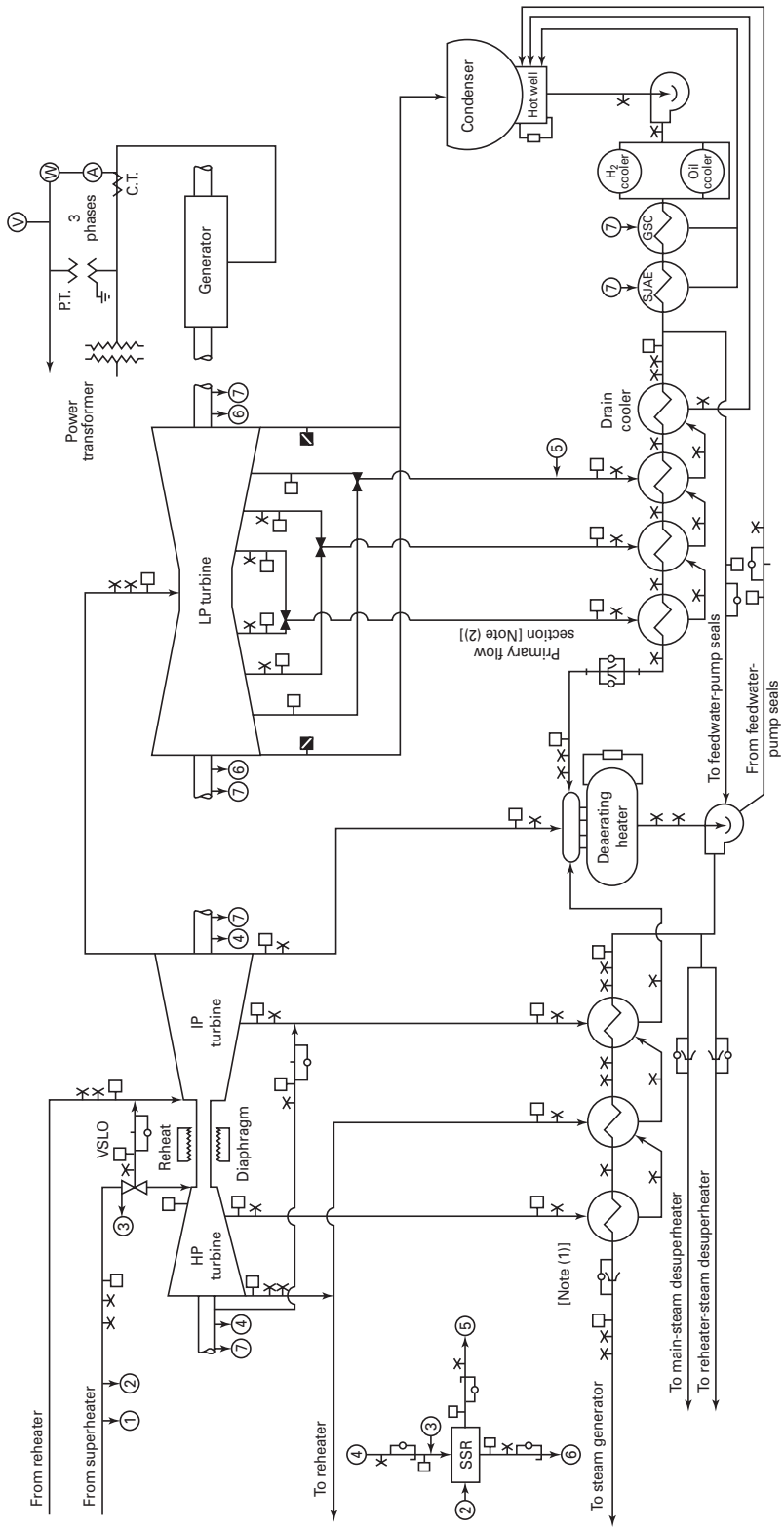

NOTES:
(1) See para. 4-9.1 for a discussion of recommended flow measurement locations.
(2) Specific flow measuring primary elements are suggested for guidance. Alternate flow elements are permissible provided the final measurement has no higher uncertainty than the best attainable with the specified primary element.

Fig. 4-11(a) Location and Type of Test Instrumentation (High-Pressure Feedwater Heater Supplied With Superheated Extraction Steam)

--`,,```,,,,````-`-`,,`,,`,`,,`---

Copyright ASME International
Provided by IHS under license with ASME
No reproduction or networking permitted without license from IHS

Not for Resale

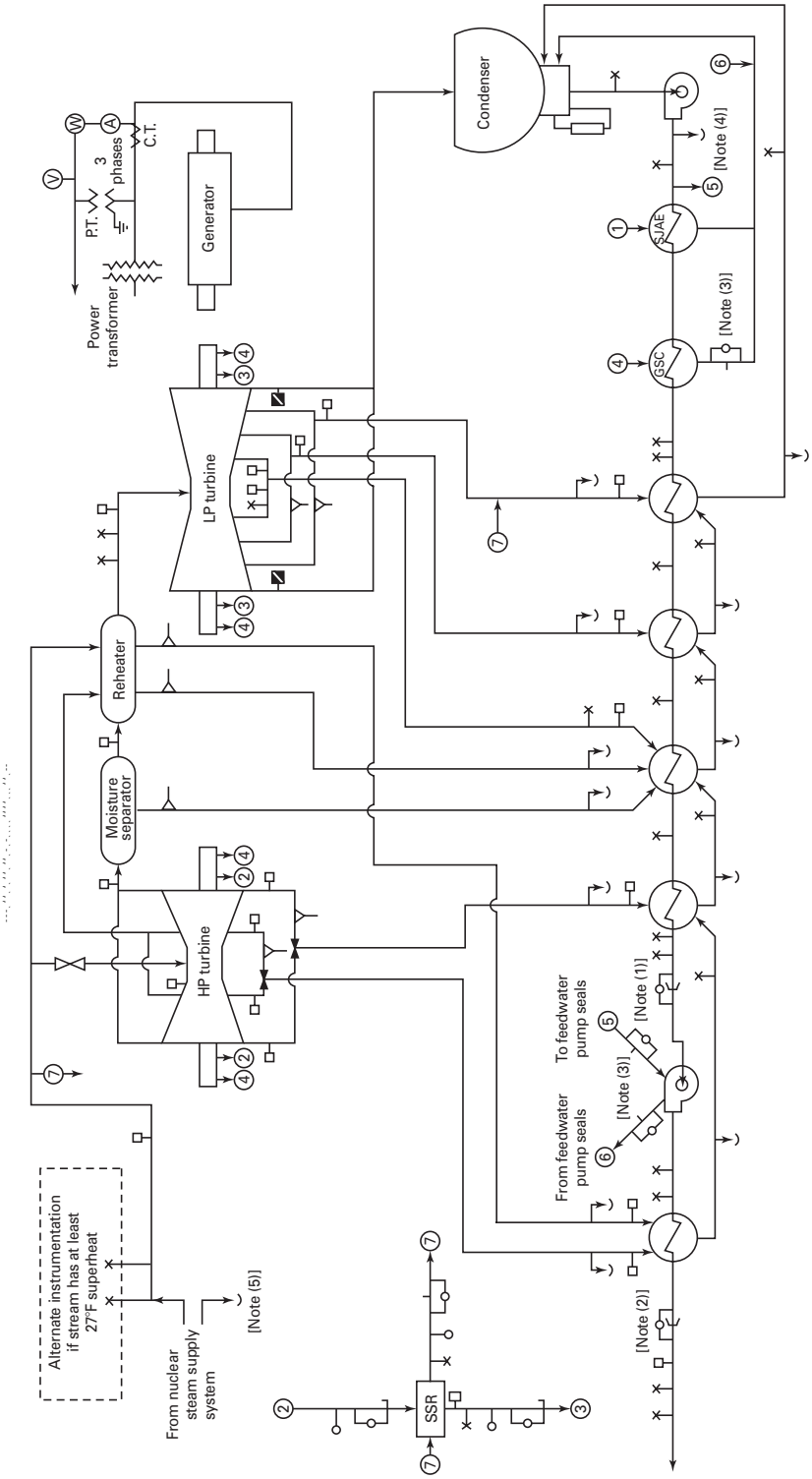

NOTES:
(1) Recommended primary flow measurement when heater leakage is measured by tracer.
(2) Recommended alternate primary flow measurement. See para. 4-8.4 (c) for inspection requirements.
(3) A calibrated turbine meter may be used where flashing might otherwise be a problem or flow rate is less than 5% of primary flow.
(4) Omit water sample if main steam has at least 27°F superheat.
(5) Specific flow measuring primary elements are suggested for guidance. Alternate flow elements are permissible provided the final measurement has no higher uncertainty than the best attainable with the specified primary element.

Fig. 4-11(b) Location and Type of Test Instrumentation (Heater Drains Cascading to Condenser; Tracer Technique for Flow Measurement)

Copyright ASME International
Provided by IHS under license with ASME
No reproduction or networking permitted without license from IHS
Not for Resale

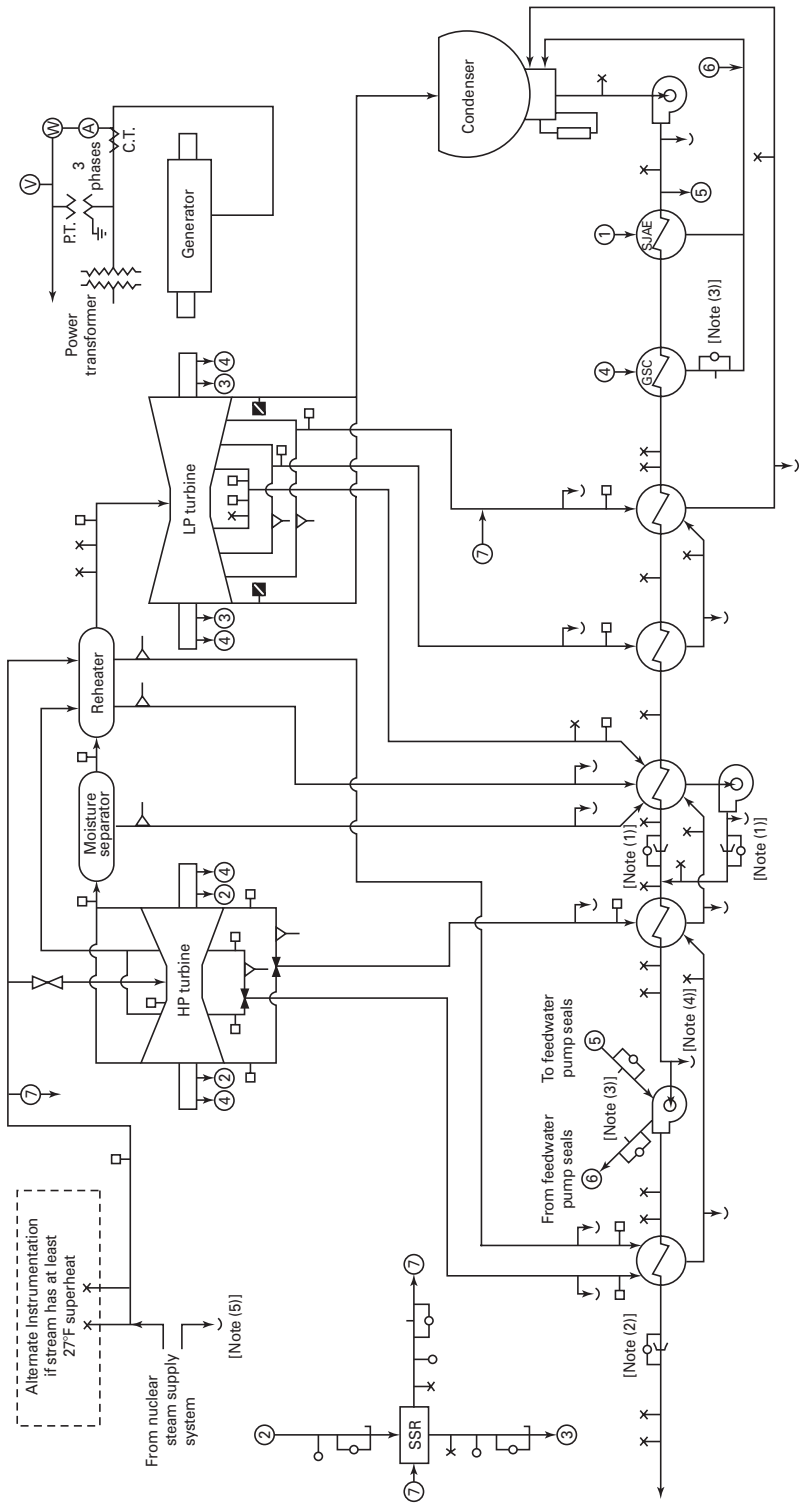

NOTES:
(1) Recommended primary flow measurement when heater leakage is measured by tracer.
(2) Recommended alternate primary flow measurement. See para. 4-8.4 (c) for inspection requirements.
(3) A calibrated turbine meter may be used where flashing might otherwise be a problem or flow rate is less than 5% of primary flow.
(4) Omit water sample if main steam has at least 27°F superheat.
(5) Specific flow measuring primary elements are suggested for guidance. Alternate flow elements are permissible provided the final measurement has no higher uncertainty than the best attainable with the specified primary element.

Fig. 4-11(c) Location and Type of Test Instrumentation (Heater Drains Pumped Forward; Tracer Technique for Flow Measurement)

Copyright ASME International
Provided by IHS under license with ASME
No reproduction or networking permitted without license from IHS
Not for Resale

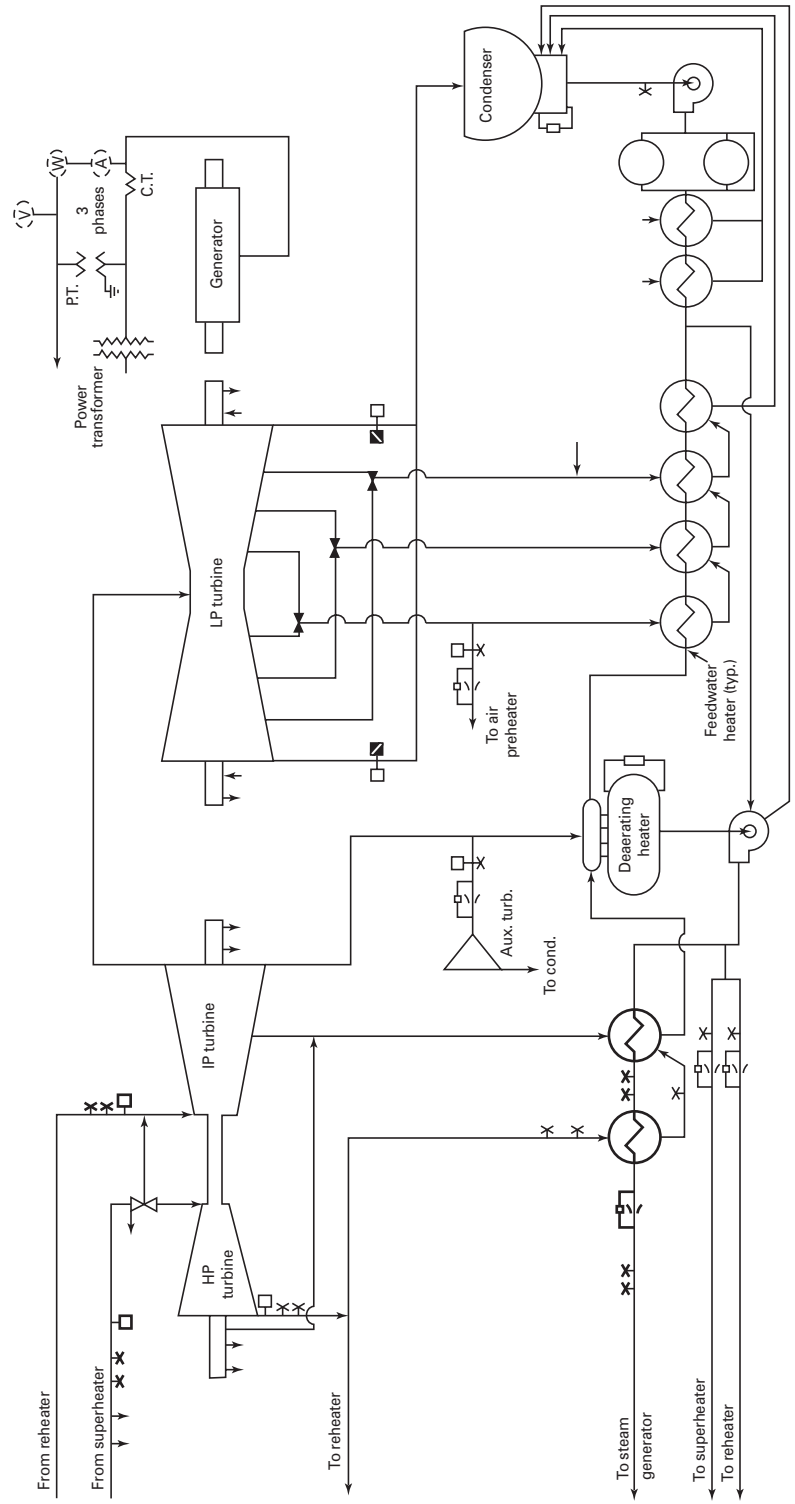

Fig. 4-11(d) Location and Type of Test Instrumentation for Alternative Test Procedure—Fossil

Copyright ASME International
Provided by IHS under license with ASME
No reproduction or networking permitted without license from IHS
Not for Resale

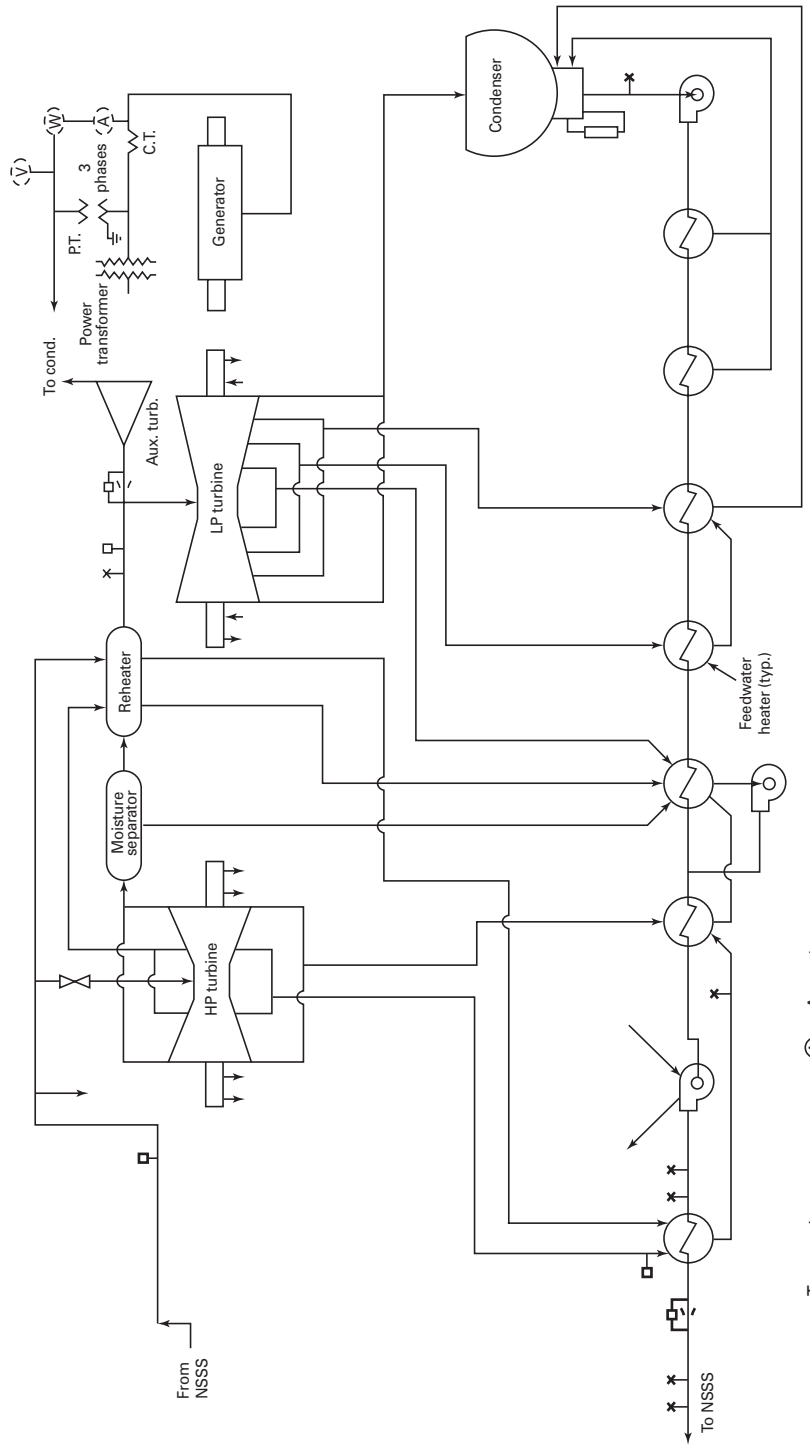

Fig. 4-11(e) Location and Type of Test Instrumentation for Alternative Test Procedure—Nuclear

Copyright ASME International
Provided by IHS under license with ASME
No reproduction or networking permitted without license from IHS
Not for Resale

4-9.4

To minimize the difficulty of obtaining steady flow, the flow measuring device should not be located at a pump discharge. Advantage should be taken of the damping effect of any existing heat exchangers and long lengths of pipe in the cycle in locating the flow measuring device. The flow measuring device should also be located to eliminate the effects of recirculating and bypassing flows. If this is not possible, extraneous flows shall be measured with sufficient accuracy so that the effect on primary flow uncertainty is fewer than ±0.05%.

4-9.5

The installation of the flow measuring section in a horizontal run is recommended. To minimize the effects of distortion due to thermal expansion and nozzle-coefficient extrapolation due to higher Reynolds numbers, flow nozzle locations having water temperatures below 300°F (422K) are preferred. However, flow nozzles located downstream of the highest pressure heater are acceptable if they are designed in accordance with this Code (see paras. 4-8.6 through 4-8.18).

4-9.6

When the flow measuring device is installed such that the upstream and downstream tap locations are at different elevations, it is necessary to correct for water leg differences between the tap elevations caused by the difference in density of the water in the flow section and pressure-sensing lines (see Fig. 4-12).

4-9.7

If the only two acceptable sets of taps are 90 deg apart instead of the recommended 180 deg apart in a horizontal pipe, one set should be located at the horizontal axis of the pipe (see Fig. 4-13). If the other set of taps has the upstream and down-stream taps connected to the pipe at different elevations, special attention to insulation must be given to minimize any specific weight differences between the water flowing through the pipe and in the pressure tap lines (see para. 4-9.6 and Fig. 4-12). If the flow section is located in a vertical pipe, any tap configuration is acceptable. See para. 4-9.6 for further discussion of necessary water leg correction for taps at different elevations.

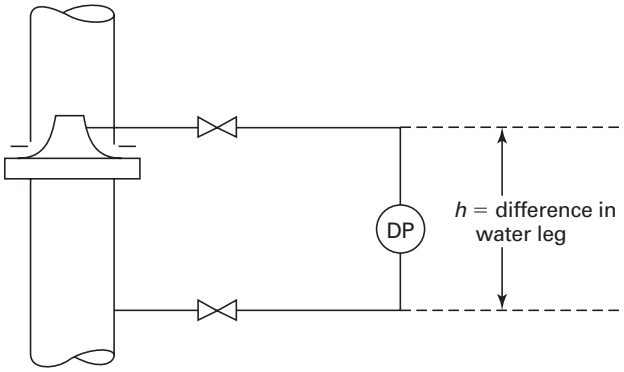

For upward flow:
$\Delta p_{true} = \Delta p_{meas.} + (p_{amb} - p_{pipe})(\frac{g}{g_o})h$

For downward flow:
$\Delta p_{true} = \Delta p_{meas.} - (p_{amb} - p_{pipe})(\frac{g}{g_o})h$

Fig. 4-12 Water Leg Correction for Flow Measurement

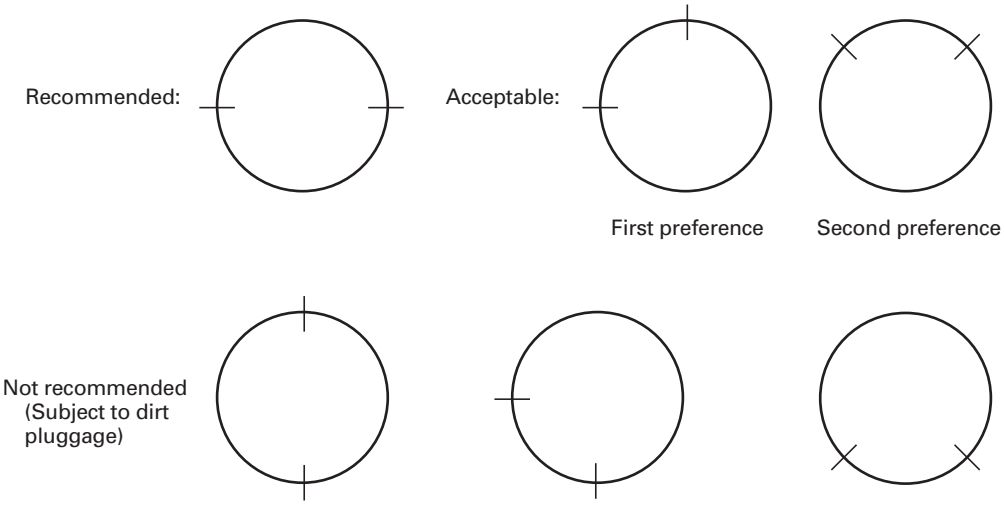

Fig. 4-13 Flow Element Tap Locations for Horizontal Pipes

Copyright ASME International
Provided by IHS under license with ASME
No reproduction or networking permitted without license from IHS
Not for Resale

4-10 FLOW CHARACTERISTICS

4-10.1

Flow measurements shall not be undertaken unless the flow is steady or fluctuates only slightly with time (see also para. 3-9). The permissible magnitude of mass flow fluctuation requires that the magnitude of the differential pressure fluctuation, (max − min)/2, not exceed 1% of the average for fluctuation frequencies greater than or equal to twice the sampling rate. For fluctuation frequencies less than twice the sampling rate, the permissible limit of the fluctuation in differential pressure is 4%. Fluctuations in the flow shall be suppressed before the beginning of a test by very careful adjustment of flow and level controls or introducing a combination of conductance, such as pump recirculation, and resistance, such as throttling the pump discharge, in the line between the pulsation sources and flow measuring device. Damping devices on instruments do not eliminate errors due to pulsations and, therefore, shall not be used. If the pulsations exceed the above values after every effort has been made to suppress them, mutual agreement is required before the test can proceed.

4-10.2

In passing through the flow measuring device, the water shall not flash into steam. The minimum throat static pressure shall be higher than the saturation pressure corresponding to the temperature of the flowing water by at least 20% of the throat velocity head, as required per para. 4-16.2, to avoid cavitation.

4-11 OTHER FLOW-MEASURING DEVICES

Information relative to the construction, calibration, and installation of other flow-measuring devices is described in PTC 19.5. Although these devices are not recommended for the measurement of primary flow, they may be used provided they conform to the general requirements of paras. 4-8.4 and 4-8.14 with the following exceptions:

(a) For the requirement stated in para. 4-8.4(a), the beta-ratio shall be limited to the range 0.25 to 0.50 for wall-tap nozzles and venturis and 0.30 to 0.60 for orifices.

(b) For the requirement stated in para. 4-8.14, the appropriate reference coefficient for the actual device given in PTC 19.5 shall be used. The parties to a test should become familiar with the contents of PTC 19.5 regarding these devices.

4-12 MEASUREMENT OF STEAM FLOW

4-12.1

This Code requires that the primary flow be measured in the feedwater cycle (para. 4-9) whenever possible. When the cycle configuration requires primary steam flow measurement, the requirements for accurate steam flow measurements are the same as for water flow measurements with the exceptions and additions of paras. 4-12.2 through 4-12.5. The installation and calibration of flow measuring devices used to measure primary steam flow to high-pressure, high-temperature turbines, however, is inherently difficult.

4-12.2 Installation

The installation shall be in accordance with PTC 19.5. Valve stems should be in the horizontal position to prevent trapping of water.

4-12.3

The flow section shall have the same thermal insulation as the rest of the steam pipe.

4-12.4 Flow Characteristics

In passing through the flow measuring device, the steam shall remain superheated. Measurement shall not be attempted if the amount of superheat is less than 27°F (15K) in the throat.

4-12.5 Secondary Measurements

The calculation of steam flow through a nozzle, an orifice, or a venturi should be based on upstream conditions of pressure, temperature, and viscosity. In order to avoid the disturbing influence of a thermowell located upstream of a primary element, downstream measurements of pressure and temperature are used to determine the enthalpy of the steam, which is assumed to be constant throughout a well-insulated flow measurement section. Based on this enthalpy and the upstream pressure, the desired upstream properties can be computed from steam tables.

4-13 MEASUREMENT OF WATER FLOW USING TANKS

4-13.1

Actual weighing of water is the most accurate method of measuring flow if the tanks, timing devices, and scales are sized and calibrated to eliminate total measurement uncertainty of 1% or greater. It is sometimes necessary to load and unload large scales many times before an accurate scale calibration can be obtained.

4-13.2

Volume tanks also give accurate results provided that they are properly maintained and calibrated. Temperature corrections should be applied to account for changes in tank size.

--`,,```,,,,````-`-`,,`,,`,`,,`---

Copyright ASME International
Provided by IHS under license with ASME
No reproduction or networking permitted without license from IHS Not for Resale

4-13.3

The following precautions shall be observed in the use of weigh or volume tanks:

(a) There shall be no spilling or loss of water at admission whenever two tanks are used. Whatever means are employed for diverting water from one tank to another shall be quick, positive, and symmetrical.

(b) Should the method of measurement require level indicating means, the arrangement of the tank or tanks shall be such that the level may be observed with an accuracy that will limit the total measurement uncertainty to less than 20.1 of the contents of the tank, including errors of observation incidental to turbulences caused by the maximum rate of incoming water flow.

(c) It shall be ascertained that inlet and outlet valves or gates do not leak when closed.

(d) It shall be ascertained that the weighing tank system is free from any external force and that nothing can affect the weight reading except the deadweight, or tare, of the tank and the water to be weighed. The deadweight, or tare, shall be taken before each filling.

(e) Volume tanks must cease dripping before the outlet valves are closed.

(f) In order that any inconsistency in the quantity measurements may be immediately discovered, equal time periods or equal weight increments should preferably be alloted for charging weigh tanks.

(g) For weigh tanks, the weight of air displaced by water shall be taken into account.

(h) The method of accounting for losses in the form of flash vapor shall be agreed upon.

(i) The density of water in the volume tanks should be determined from a temperature measurement accurate to within ±1°F (0.5 K).

4-14 DIFFERENTIAL-PRESSURE MEASUREMENTS

4-14.1

The measurement of the differential pressure necessitates particular care. Some precautions are listed below and illustrated in Fig. 4-14(a) and 4-14(b).

(a) Calibrated differential pressure transducers are recommended. A transducer for each set of taps is required. For primary flow measurements, differential pressure transducers of the 0.05% (or better) accuracy class (kO.1% maximum uncertainty) shall be used. Alternatively, mercury-filled manometers may be used provided the precautions of para. 4-1.4 are followed. The length of piping between the flow measuring device and manometers shall not exceed 25 ft (7.5 m) and shall be uninsulated. Piping to transducers may be longer than 25 ft (7.5 m) and shall be uninsulated.

(b) For primary flow measurements, differential pressure transducers should not introduce an uncertainty exceeding ±0.1% of the minimum flow to be measured. They must be calibrated before and after each test, and each calibration must be accomplished for both increasing and decreasing pressure in order to establish hysteresis. If one-half the hysteresis error is small enough to allow use of the transducer, the mean curve between the two calibration curves shall be used for correcting the observed pressure. The aging of the transducer must be carefully recorded. The before and after calibration curves shall not differ by more than 0.05%

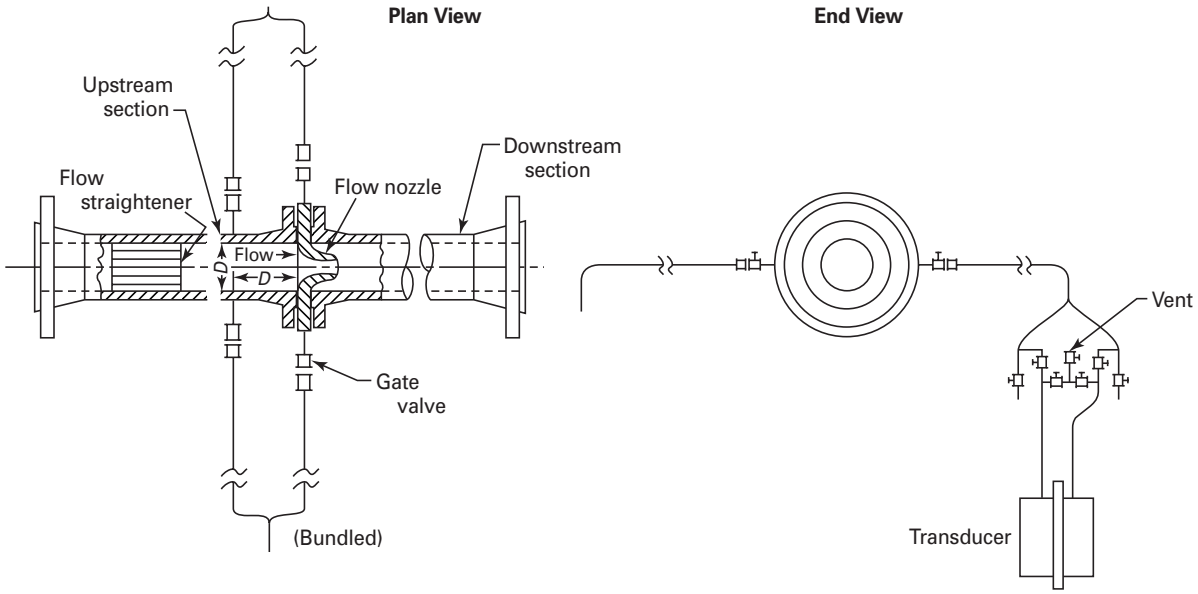

Fig. 4-14(a) Connection Between Calibrated Flow Section and Transducer

Copyright ASME International
Provided by IHS under license with ASME
No reproduction or networking permitted without license from IHS
Not for Resale

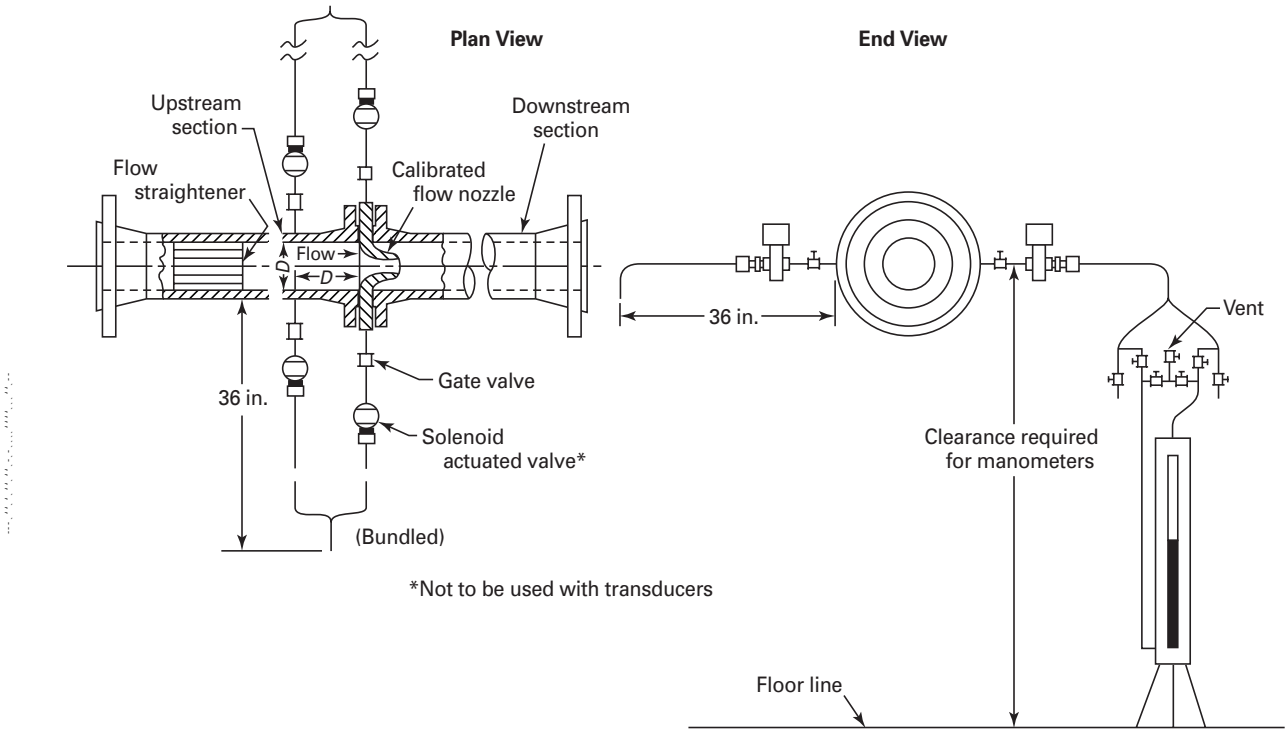

GENERAL NOTE: Connecting piping between taps and manometers shall not be less than $^3/_8$ in. (10 mm) inside diameter or equivalent. Refer to para. 4-14.1(e).

Fig. 4-14(b) Connection Between Calibrated Flow Section and Manometer

of mass flow. Except by agreement of the parties to a test, the test must be repeated if this difference is exceeded. It is advisable to use transducers which have stable characteristics over the span of the test period.

(c) In order to achieve and maintain the desired accuracy, transducers may require shock mounting and a temperature-controlled environment during the test. All transducers shall be bench calibrated at line pressure using a calibration reference that is traceable to a recognized national standards laboratory, such as the National Institute of Standards and Technology. After installation for the test, a zero reading shall be obtained at line pressure.

(d) In nuclear applications, transducers may be mounted in areas of high radioactivity. Pressure lines run from the transducers to an area of low radioactivity allow the transducers to be calibrated in place. Appropriate remotely controlled valves with the same flow resistance in each direction must be used (see Fig. 4-15).

(e) For manometers, connecting piping used between the pressure taps and the instruments shall not be less than $^3/_8$ in. (10 mm) inside diameter tubing or equivalent to avoid resistance damping inside the piping. This tubing shall run horizontally for 3 ft (1 m) from the flow measuring device and then slope down continuously without loops to the instrument in order to eliminate air from the lines.

(f) Precaution must be taken when running the instrument piping to ensure that the temperature difference of the fluid in the two lines connecting the primary element and each instrument does not exceed 4°F (2K). The piping should be bundled and run to minimize the heat transferred from external sources.

(g) The instrument piping shall be well flushed before the instrument is connected. The instrument connections shall include valves, tees, bleeders, and dirt traps as shown in Fig. 4-14(a) and (b), suitable for shutting off instrument piping or venting at any time during the test. Sufficient time should be allowed for the water legs in the connecting piping to reach temperature equilibrium. Connecting piping temperature should be below saturation for the measured pressure. A minimum waiting time of one hr is usually sufficient.

(h) Zero-displacement solenoid-operated valves may be installed with manometer systems, as shown in Fig. 4-14(b), in each tube close to the primary element to eliminate differential-pressure fluctuations during reading. These valves are to be closed for reading at definite

Copyright ASME International
Provided by IHS under license with ASME
No reproduction or networking permitted without license from IHS
Not for Resale

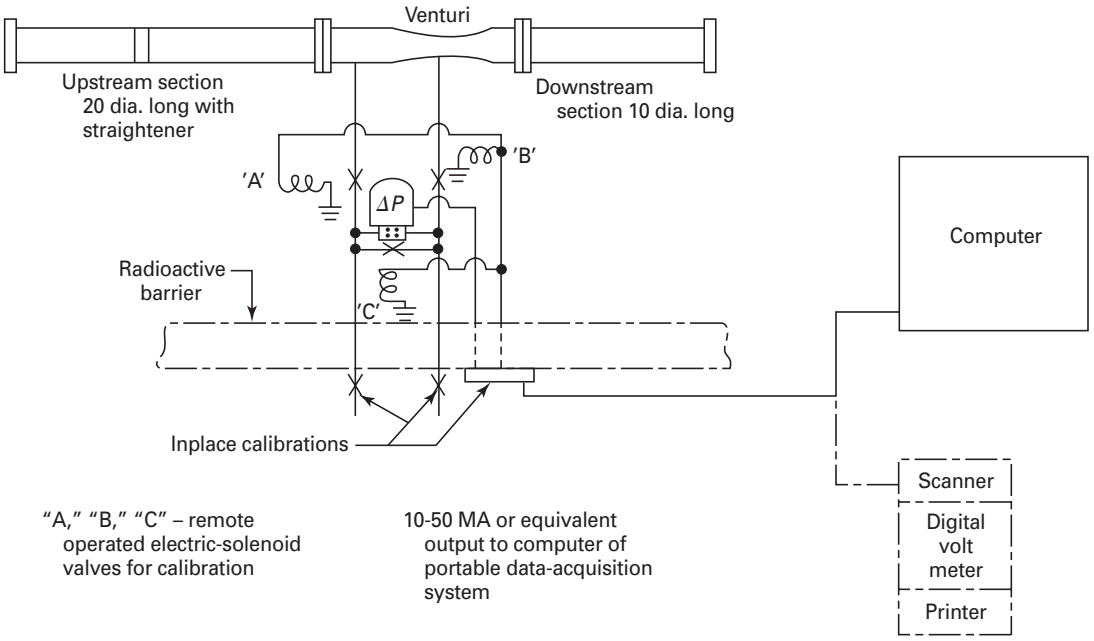

Fig. 4-15 Connection Between Flow Section and Transducer in Area of High Radioactivity

intervals without regard to the value of the differential pressure. Other means of obtaining instantaneous readings may be employed if they do not introduce errors in the reading. Solenoid valves should not be used with transducers for arresting readings but may be used for multiplexing instruments.

(i) Differences in elevation of pressure taps must be known within 0.25 in. (6 mm).

(j) The instruments should be located at a lower elevation than the primary-flow element.

(k) When it is impossible to locate the instrument at the lower elevation, special precautions must be taken to ensure proper venting of the system. Suitable water reservoirs must be installed above the instruments with valves for venting. Also, a temperature seal (loop in piping) must be installed between the primary element and instruments.

4-14.2

The differential-pressure instruments before and after each test run shall show a change in the zero reading less than 0.1% of the differential observed during that test run. At any time during the test run, the corrected instantaneous readings of the two instruments shall agree with one another within 0.2%, after correction for any calibration difference between the two tap sets.

4-14.3

Manometers should be $^{7}/_{16}$ in. (11 mm), or larger, bore, random type, and read with the aid of an antiparallax reader or other suitable means to within 0.01 in. (0.25 mm) (see paras. 4-17.6 and 4-17.7). If mercury is used as the measuring fluid, it must be instrument grade having less than one part per million of nonvolatile residue. The manometer must be scrupulously cleaned before the mercury is introduced. See para. 4-1.4 for precautions on the use of mercury.

4-14.4

The density of water should be determined from an accurate temperature measurement taken in accordance with para. 4-18.2 and a pressure measurment taken in accordance with para. 4-17.1. The temperature measurement should be located within 10 pipe diameters downstream of the primary flow section.

4-15 ENTHALPY-DROP METHOD FOR STEAM-FLOW DETERMINATION

The enthalpy-drop method may be employed for the determination of steam flow but is applicable onlyto noncondensing or backpressure turbines having a flow at rated output of not less than 50,000 lbm/hr (6.03 kg/s), an exhaust temperature corresponding to at least 27°F (15K) superheat, and an enthalpy drop of not less than 200 Btu/lbm (465 kJ/kg). Separate generator tests must be available from which electrical losses can be computed or their value must be agreed upon. The parties to the test shall assign and agree upon values for the mechanical losses of

Copyright ASME International
Provided by IHS under license with ASME
No reproduction or networking permitted without license from IHS
Not for Resale

the turbine, which for the method to be acceptable, shall not exceed 2% of rated output. The steam flow is calculated from an energy balance based on measurements of pressure and temperature of all steam entering and leaving the turbine, including consideration of leakoffs, generator output, and the agreed upon mechanical and electrical losses. Not fewer than two independent determinations of the inlet enthalpy and exhaust enthalpy shall be made, which shall agree with each other within 0.5 Btu/lbm (1.2 kJ/kg).

4-16 ADDITIONAL FLOW MEASUREMENTS

4-16.1

The type of instrumentation and the technique for measuring flows other than primary flow shall be determined by the accuracy requirement based on calculation of the expected flows and their effect on the overall results. The combined uncertainty of these measurements shall not affect heat rate by more than ±0.1%.

Any secondary flow measurement requiring a lower uncertainty than ±5% shall be made with calibrated flow measuring devices. An allowable uncertainty of ±2% requires flow straighteners which divide the pipe cross-section into at least 12 sections of equal areas installed upstream of the flow measuring devices. If the allowable uncertainty is to be less than ±1%, a perforated or tubed plate with a nonuniform hole distribution is required. For allowable uncertainties of less than ±0.5%, all requirements for accurate flow measurement, stated in paras. 4-8.4 through 4-12.6, must be satisfied.

4-16.2 Extraction Flows

If the extraction steam is superheated, the extraction flow can be determined by heat balance calculation. The uncertainty of the result increases as the temperature rise across the heater diminishes. It should be noted that errors in temperature measurement will be translated into errors in extraction flow. For instance, an error of 1°F (0.5K) in the measured temperature rise of a heater with an increase of 30°F (17K) will result in an error in extraction flow of approximately 3.3%. In wet-steam cycles, extraction flows can be determined from heater drain flow measurements using calibrated flow measuring devices. Nozzles can be used, and for the lowest pressure heater, a diffusing cone should be installed downstream of the nozzle because of the small pressure drop available. In sizing these nozzles, the best compromise between Reynolds number, pressure loss, beta-ratio, and deflection should be made without reducing the critical cavitation coefficient K below 0.55 to avoid cavitation.

$$K = \frac{144(p_{\text{throat}} - p_{\text{sat}})}{\frac{\rho}{2g} V_{\text{throat}}^2}$$

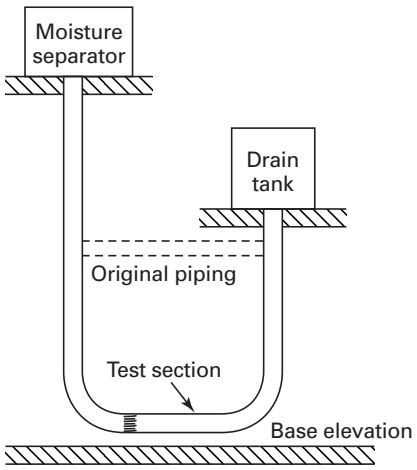

Fig. 4-16 Loop-Seal Piping Arrangement for Moisture Separator Drain Flow Measurements

This verification is necessary for any flow where a limited amount of pressure drop is available for flow measurement. The cavitation problem may be reduced by providing a loop seal, or increasing the height of the loop seal as in Fig. 4-16, to increase the head on the meter.

The measurement of the differential pressure requires care and should follow the precautions outlined in para. 4-14 for primary flow differential pressure measurement. Heater drain flows are often unsteady; to minimize errors due to such unsteady flow, reference should be made to paras. 3-9.1 through 3-9.4 for guidance on frequency of readings.

For some secondary flows, such as moisture separator and reheater drains, a flow section may be impracticable because of cavitation caused by inadequate head. In these cases, the tracer technique can be used to measure the flow. The uncertainty for this method is about ±1%.

4-16.3 Feedwater Pump Turbine Steam Flow

Steam consumption of a feedwater pump turbine is preferably measured as condensate if a separate condenser is installed. However, in a cycle having a feedwater pump driven by a turbine supplied with steam from the main turbine, and where the condensate cannot be separately measured, the steam supplied must be measured.

Feedwater pump turbine steam flow should be determined with instruments whose combined uncertainty is not greater than ±2% to limit the effect on heat rate to not more than ±0.5%.

4-16.4 Packing Leak-Off Flow

An uncertainty no greater than ±5% is satisfactory for packing flow measurements. This is attainable with appropriate, commercially available uncalibrated instrumentation.

Copyright ASME International
Provided by IHS under license with ASME
No reproduction or networking permitted without license from IHS
Not for Resale

4-16.5 Turbine Interstage Packing Leakage Flow

Opposed flow HP-IP turbines have shaft packing between the HP and IP units to restrict steam flow from the HP first stage exit zone to the IP inlet bowl. It is important to assign values to this flow and its enthalpy because it bypasses the reheater, affecting the calculation of hot reheat steam flow and, thus, the turbine test heat rate.

Since direct measurement of this leakage rate is not possible, a suitable approximation of this flow can be obtained by a special test procedure, involving enthalpy drop tests with selected combinations of throttle and hot reheat temperatures. In applying this method, it is assumed that the expansion of steam through the IP turbine takes place at the same efficiency regardless of (1) the starting state point and (2) the amount of the influence of the leakage from the HP turbine. Both of these items can be varied in a series of enthalpy drop tests in which different combinations of throttle and hot reheat temperatures are selected. The resulting "apparent" overall IP efficiencies (hot reheat state point to IP exhaust state point) are then analyzed to determine the most likely amount of leakage flow. It is helpful to include tests with the largest possible influence of this leakage on "apparent" IP efficiency by selecting combinations involving either high throttle temperature and low hot reheat temperature or high hot reheat temperature and low throttle temperature.

In applying this method, each "apparent" IP efficiency must be adjusted to the level to be expected if two assumed amounts of interstage leakage (1% and 4%) had not been present when the test was run. Plots of straight lines through several pairs of these points (IP efficiency vs. leakage flow in percent of hot reheat bowl flow) should show a convergence on the actual amount of leakage present. The adjustment of the "apparent" IP efficiency can be derived from Fig. 4-17, Effect of HP/IP Leakage on Measured IP Efficiency.

The reader is cautioned that this method will include any other leakage (such as leakage across horizontal joints of internal parts) in addition to that through the packing. The enthalpy of any other leakage may not be known, but fortunately, the enthalpy of the leakage does not have a large effect on the result.

This method should result in an uncertainty in interstage leakage flow of less than 1% of hot reheat flow.

4-16.6 Air-Ejector Steam Flow

Steam-jet air-ejector steam flow may be determined from the measured pressure and temperature of its steam supply and known cross-sectional area of the jets. When the steam supply is wet, it may be preferable to use the

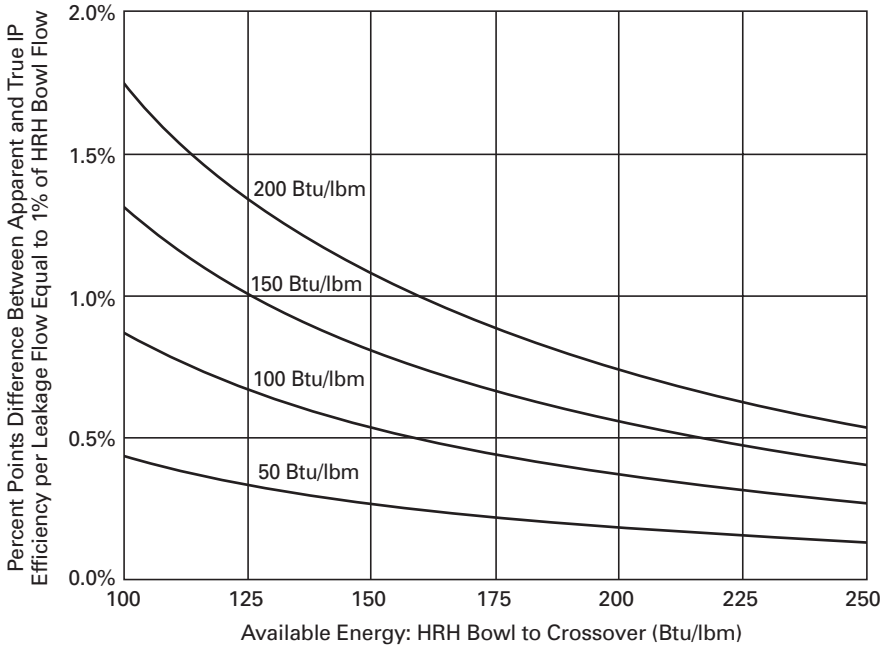

GENERAL NOTES:
(a) Assumes 500 psia/1000°F HRH conditions and 90% true IP section efficiency.
(b) Numbers on curves are the difference between the HRH and HP/IP leakage enthalpies.

Fig. 4-17 Effect of HP-IP Leakage on Measured IP Efficiency

Copyright ASME International
Provided by IHS under license with ASME
No reproduction or networking permitted without license from IHS
Not for Resale

design flow rates for the nozzle, corrected for supply pressure.

4-16.7 Feedwater Heater Leakage

Feedwater heater leakage can be determined by injecting a tracer in the condensate entering the lowest pressure heater and measuring the tracer concentration in the heater drains.

If tracers are not used, such as in a fossil plant, feedwater heater leakage can be determined by closing the extraction valve, diverting the entering drain flow, and checking for a level change.

4-16.8 Heater Drain Flow

Extraction enthalpies can be determined by making energy balances around individual feedwater heaters, solving directly for enthalpy once the extraction flow quantities are determined by measurement of heater drain flows. The difference between the drain flow leaving a heater and drain flow(s) into that heater is the extraction flow from the turbine to that heater. See para. 4-16.2 for guidance in making the heater drain flow measurements (see para. 4-16.8 below).

4-16.9 Two-Phase Steam-Water Mixtures

There are instances when it is desirable to measure the flow rate of a two-phase mixture. An example is the use of an orifice plate to measure the flow of wet heating steam to the live steam reheater in a nuclear plant. When this is done, the installation should be made with all the care recommended in para. 4-16.1.

The calculation of the flow rate through the orifice requires that the familiar flow equation[1] be adjusted to account for the presence of the water. Although there is no universally accepted adjustment resulting from the experimentation that has been carried out by several investigators, the following correlation is thought to be the best available for the applications required in this Code:

$$G = \left[\frac{CYF_aA}{\sqrt{(1-\beta^4)}}\right]\left[\frac{2g_c\Delta p}{x^{1.5}(v_g - v_f) + v_f}\right]^{1/2}$$

which can also be expressed as

$$G = K\left[\frac{CYd^2F_a}{\sqrt{(1-\beta^4)}}\right]\left[\frac{\Delta p}{x^{1.5}(v_g - v_f) + v_f}\right]^{1/2}$$

where

G = phase mass flow rate, lbm/hr (kg/s)
C = orifice discharge coefficient = 0.61
Y = expansion factor
F_a = orifice thermal expansion factor
K = $(\pi/4)(3600/144)(12\sqrt{2}(32.174)$ = 1890.07 for U.S. Customary units
K = $\sqrt{2}(\pi/4)$ = 1.11072 for SI units
D = throat diameter, in. (m)
A = orifice area, ft^2 (m^2)
β = ratio of orifice diameter to inside pipe diameter
Δp = differential pressure across the orifice, psi (Pa)
x = inlet mixture quality, decimal fraction
v_g = specific volume of vapor phase, ft^3/lbm (m^3/kg)
v_f = specific volume of liquid phase, ft^3/lbm (m^3/kg)
g_c = constant of proportionality, 32.174 lbm-ft/lbf-sec^2 (only for U.S. Customary units)

[1] James, Russell, Metering of Steam-Water Two Phase Flow by Sharp Edged Orifices, Proc. Ins. Mechanical Engineers, 1965–1966, Vol. 180, Pt. 1, No. 23, pp 549–566.

4-17 MEASUREMENT OF PRESSURE

4-17.1

The following list includes the instruments to be used for pressure measurement:

(a) Calibrated pressure transducers of the 0.10% accuracy class for all critical pressure measurements (see Fig. 4-18). Alternatively.

(1) for pressures above 35 psia (240 kPa), use calibrated deadweight gages having a piston ratio of 10:1 or less.

(2) for pressures below 35 psia (240 kPa), use calibrated manometers (see para. 4-17.7). See para. 4-1.4 on precaution on use of mercury as the manometer fluid.

(b) Random-type barometers for atmospheric pressure measurement (see paras. 4-17.11 through 4-17.15).

(c) Absolute pressure transducers of the 0.10% accuracy class or better for exhaust pressure measurement of condensing turbines. Alternatively, absolute pressure gages, calibrated manometers (see para. 4-17.7), or differential pressure tranducers as described in para. 4-17.31 may be used.

4-17.2

Calibrated pressure transducers of the 0.25% accuracy class may be used to determine pressures where a high degree of accuracy is not required as in the case of water pressure at a test nozzle to determine density. Alternatively, calibrated laboratory Bourdon gages may be used in this application.

4-17.3 Transducers

Accurate pressure measurements with transducers require care in use, proper maintenance, and proper installation. It should be recognized that a transducer is, in general, a delicate instrument and must be treated as such.

4-17.3.1 Accuracy. The required accuracy of a transducer for turbine testing should be determined by

Copyright ASME International
Provided by IHS under license with ASME
No reproduction or networking permitted without license from IHS
Not for Resale

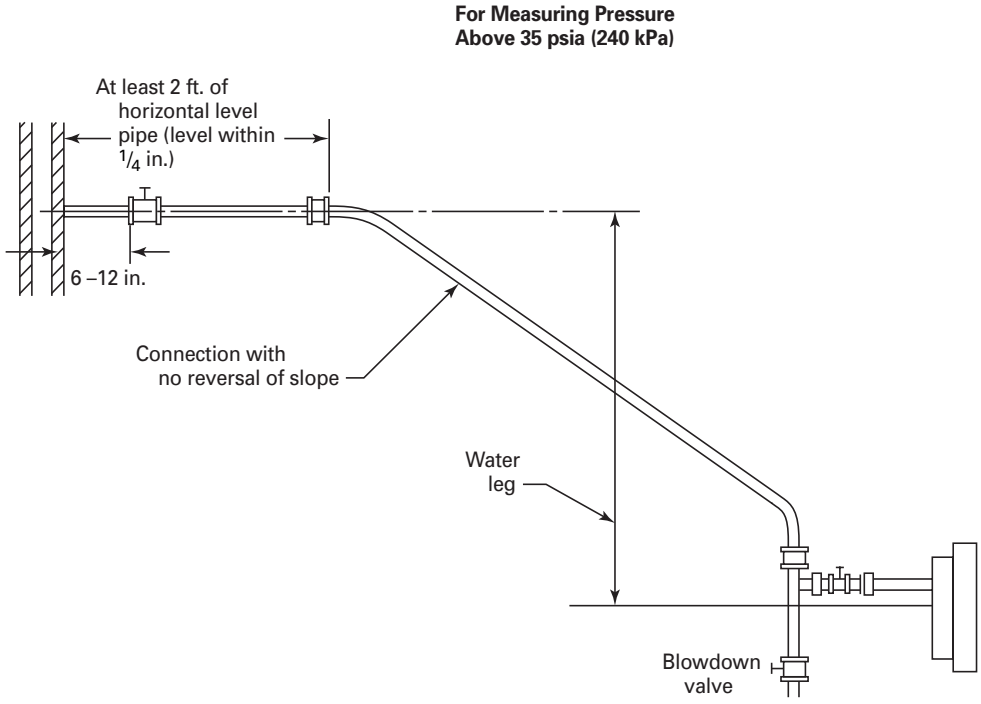

GENERAL NOTES:
(a) Gage may be above, below, or level with pressure tap.
(b) Gage must be set on a level support or leveled by means of leveling screws in base.
(c) Gage must not be subjected to vacuum. Shut valve immediately if turbine is tripped out or before shutting down.
(d) Connecting piping shall not be less than $^3/_8$ in. (10 mm) inside diameter, and $^1/_2$ in. (13 mm) nominal outside diameter, or equivalent tubing (refer to para. 4-17.22).

Fig. 4-18 Connection Between Pressure Source and Transducer

calculating the effect an error in the pressure measurement has on heat rate. Regardless of the transducer application, it should be calibrated before and after every test.

4-17.3.2 Location. The transducer should be located in a position that is free of vibration, dirt, and where there are not likely to be large changes in ambient temperature, such as may be caused by an outside door. Where possible, transducers measuring pressures above atmospheric should be mounted below the tap, and those measuring pressure below atmospheric should be mounted above the tap.

4-17.3.3 Zero Reading. If the transducer is sensitive to changes in environment, such as temperature, and a controlled capsule surrounds the sensing element, the system should be given a minimum of 3 hr to stabilize before readings are taken. A zero reading shall be taken before and after each test run. The zero reading shall not change more than 0.1% of the reading observed during the test run.

4-17.3.4 Differential-Pressure Transducers. Special precautions should be observed when a transducer is used to measure differential pressure. The transducer selected for primary flow differential should have an error no greater than 0.05% of full scale plus 0.010% of reading (see para. 4-14).

4-17.4 Deadweight Gages

Deadweight gages shall be calibrated or standardized before initial usage and thereafter as needed. The weights shall be standardized by comparison with those of a recognized national standards laboratory, such as S weights of the National Institute of Standards and Technology. When taking readings, the weights and gage piston must be rotating to assure no fouling and complete freedom of motion.

4-17.5 Bourdon Gages

Bourdon gages should be connected to the pressure tap by an adequate coil to prevent high-temperature fluid from reaching the gage.

Copyright ASME International
Provided by IHS under license with ASME
No reproduction or networking permitted without license from IHS
Not for Resale

4-17.6 Manometers and Barometers

A manometer may be of the U-tube type with scales so arranged as to make it possible to read the level of each leg and with the same size of tubing in both legs or, alternatively, a reservoir-type manometer, which may have a compensated scale.

4-17.7

Manometers required for random measurement, such as primary flow, shall have scales, riders, and verniers so that they may be read to 0.01 in. (0.25 mm). For less random, scales should be readable to 0.05 in. (1.25 mm). Before initial usage, U-tubes shall be checked against standard scales to detect and record corrections to apply to the scales, riders, and verniers. Reservoir-type manometers for random measurement shall be calibrated to detect and record the effects of capillarity and the compensated scale; their zero shall be checked carefully, with piping isolated, using valving arranged similar to that shown on Fig. 4-14(b) with the equalizing valves open.

4-17.8

The tubes of all manometers should have an inside bore of not less than $^{7}/_{16}$ in. (11 mm) for subatmospheric pressure or flow nozzle differentials and not less than $^{1}/_{4}$ in. (6 mm) for other pressures. The larger the bore, the smaller will be the correction for capillarity. Increased sensitivity may be obtained by gently tapping the manometer tubing during each observation.

4-17.9

If mercury is used in manometers, it shall be instrument grade having less than one part per million of nonvolatile residue. For precautions when mercury is used, refer to para. 4-1.4.

4-17.10

When a doubt arises as to the purity of the mercury in the manometer, new instrument grade mercury shall be substituted.

4-17.11

Barometric transducers of 0.01 in. (0.25 mm) mercury resolution or random aneroid barometers may be used to obtain barometer readings to which manometers are to be referred. The barometers should be located in the same room at the same elevation as that of the manometers being used to measure pressures.

Barometer readings are to be corrected for difference in elevation, if any, between the barometer and any of the pressure reading devices that are to be referred to it. This correction shall be subtracted (added) at the rate of 0.01 in. Hg per 100 ft (2.5 mm Hg per 30 m) of elevation of the device above (below) the barometer.

A laboratory or weather station of recognized standing may be used to obtain the readings with agreement of the parties of the test.

4-17.12

Barometers and manometers may require a correction for capillary depression of the mercury. In some cases, the scale of mercury-in-glass-type barometers are set to correct for this, and no capillary correction need be applied.

4-17.13

Random aneroid barometers or barometric transducers with a minimum of 0.01 in. (0.25 mm) mercury resolution are permissible for measurements of barometric pressure. Prior to usage, these types of instruments should be calibrated using a large bore mercury-in-glass barometer over an extended period of time to establish calibration corrections and repeatability of the instrument. Before and after test calibrations are also required. Transducers used for barometric pressure measurements should be of the type with raised zero and closely compressed range.

4-17.14

The barometer shall be checked by comparison before and after the test to a barometer reading at a laboratory or weather bureau station of recognized standing and corrected to the same elevation.

4-17.15

Transducers of suitable accuracy, such as those described in para. 4-17.1(c), may be used for exhaust-pressure measurement.

4-17.16

Tightness of piping to transducers or exhaust-pressure gages and manometers shall be checked by installing a valve immediately adjacent to the exhaust casing or conduit. The piping and valve should be so arranged to avoid a pocket, with the valve stuffing box, if any, exposed to the pressure in the gage side of the piping when the valve is closed. At intervals during the test or between tests, with full vacuum on the piping, this valve is to be closed. If the reading falls at a rate not greater than $^{1}/_{4}$ in. (6 mm) in 5 mins, the gage piping may be deemed to be satisfactorily tight.

4-17.17

For measurement arrangements utilizing air-filled sensing lines, the low-pressure connecting piping shall

Copyright ASME International
Provided by IHS under license with ASME
No reproduction or networking permitted without license from IHS
Not for Resale

be arranged by the most direct route, pitch continuously downward from the gage to the source of pressure, and be without loops or pockets of any kind. This is required to permit condensation in the sensing lines to drain back to the source of pressure.

For low-pressure measurement systems using water-filled sensing lines, the connection of the measuring device should be at the same elevation or below the pressure tap to help prevent partial loss of the water leg in the sensing lines (refer to Figs. 4-19 and 4-20).

4-17.18

Precautions shall be taken that the manometer leg subject to atmospheric pressure cannot be influenced by any local atmospheric condition that would be different from that to which the barometer is subjected. Ventilating and draft fans can produce measurable differences in atmospheric pressure. There may be cases where it is necessary to pipe the atmospheric leg of the manometer to an area unaffected by a fan.

4-17.19

Precautions shall be taken to ensure that both legs of a manometer are subjected to the same ambient temperature and that the fluid within a manometer or barometer is at the same temperature as the thermometer by which the fluid temperature is to be measured. Each of these instruments, together with its corresponding thermometers, shall be set up in-place and subjected to the temperature conditions that exist at that location not less than 3 hr before a test is commenced.

4-17.20

For measurement of small differential pressures, such as for sensors in piping utilizing impact and static taps, special manometer fluids with a specific gravity approaching that of water should be used. Precautions should be taken that the manometer gasketing is compatible with the fluid and if the sensor is in a vacuum location, the fluid, must be suitable for vacuum service. Manometers used for this type of service must have air-filled sensing lines using small rate of air flow (0.5 to 2 cubic ft per hour) (4.9×10^{-3} to 19.6×10^{-3} m^3/s) to keep steam from condensing in the sensing lines. To minimize blowing over the manometer fluid and for zero checking the manometer, a three-way valve should be used in the P1 (high pressure) and P2 (low pressure) connections to the manometer.

4-17.21 Pressure Taps and Connecting Piping

Proper locations for all pressure taps must be selected to promote accurate and reliable measurements of pressure. Pressure taps at the turbine end of an extraction pipe must be as close to the turbine connection as practical but far enough away to minimize the flow disturbances on pressure readings. Therefore, pressure taps should not be installed in the extraction nozzle. If the pressure measured at the heater end of the extraction pipe is to be used for computing heater terminal temperature difference, for

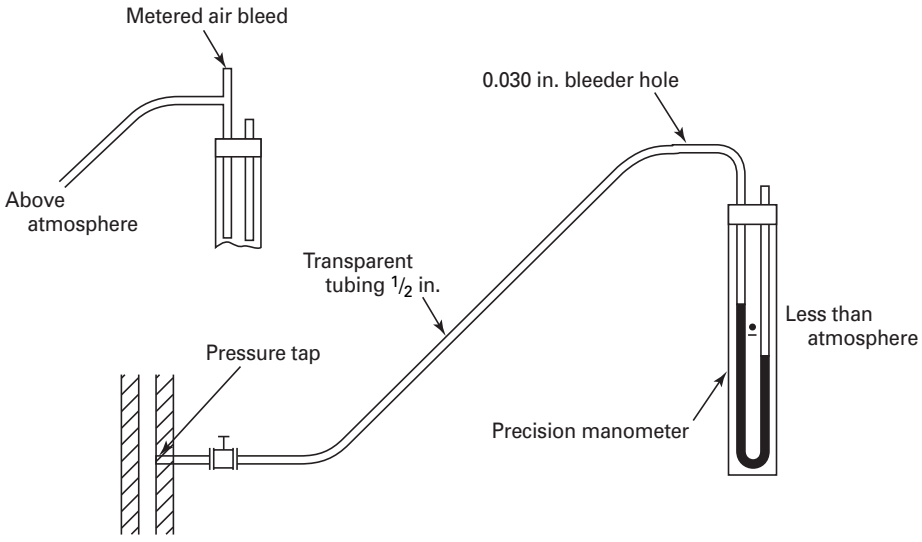

GENERAL NOTES:
(a) Bleeder hole must be uncovered and then covered tightly immediately before reading manometer.
(b) Leave bleeder uncovered when vacuum is decreasing and manometer is not in use.

Fig. 4-19 Connection Between Pressure Source and Manometer Air-Filled Connection

Copyright ASME International
Provided by IHS under license with ASME
No reproduction or networking permitted without license from IHS
Not for Resale

heater guarantee purposes, the pressure must be measured at the heater nozzle. Source connections in the IP-LP turbine crossover pipe or the LP turbine inlet serve as a common point for IP and LP turbine efficiency determinations. The best location is in a straight section as remote from the IP turbine exhaust as practicable to minimize the effect of stratification. All pressure taps should be installed in a straight run of pipe as remote as possible from upstream elbows or obstructions.

The amount of error caused by the pressure tap is a function of fluid velocity, type of fluid (compressible or incompressible), tap diameter, and configuration of the tap hole at the pipe wall. The total amount of error is generally small in steam turbine cycles because the velocity pressure component is small compared to the static pressure, and the error is on the order of 1% of the velocity pressure. Holes for measuring such pressures shall be drilled at right angles to the surface of the wall adjacent to the fluid. The hole diameter shall be no smaller than $^1/_4$ in. (6 mm) and no larger than $^1/_2$ in. (13 mm). The inner rim of the hole shall be free of burrs, leaving its edges sharp and square, or with a radius no greater than 0.06 times the hole diameter. For a length of at least twice its diameter, the hole shall be straight and of uniform bore.

4-17.22 Connecting Piping

Connecting piping shall be not less than $^3/_8$ in. (10 mm) inside diameter, and $^1/_2$ in. (13 mm) nominal outside diameter, or equivalent tubing. The connecting piping or tubing shall slope continuously from the level of the pressure tap to the level of the transducer or gage, so as to prevent air or water pockets; however, a water-loop seal may be used when the pressure measuring device must be located at a level above that of the pressure tap.

4-17.23 Air Bleeds

For pressures which are below atmospheric pressure, the connecting piping shall contain means for bleeding air or other gas near the manometer, through which a very small rate of air flow may be metered for purging. Purging should be discontinued when readings are being taken if the purge flow affects the reading. This can be determined by comparing the readings with and without the air bleed. Such purging may be used for any higher pressure connections for which a suitable uniform source of air or other gas under pressure is available (see Fig. 4-19).

4-17.24

For any pressure instrument operating above atmospheric pressure, whose connecting piping is not purged, the piping shall include

(a) reservoirs or long level sections of the connection near the turbine or steam pipe

(b) suitable valves and nipples for flushing and venting the connections

4-17.25

Pulsations of pressure shall not be damped by throttling or by the use of commercial dampeners.

4-17.26

Deadweight gages and manometers with water-filled connections are to be connected in accordance with Figs. 4-19 and 4-20. The water column correction in psi is the product of 0.03612 and the height of column inches or, in kPa, 0.9175 and the height of the column in millimeters, with the appropriate algebraic sign and with temperature correction from 32°F (0°C).

4-17.27 Initial Pressure Measurement

Initial steam pressure shall be measured in the main steam line at or near the upstream boundary of the turbine supplier's scope.

4-17.28

The steam strainer shall be known to be clean. If there is a doubt about its cleanliness on the part of either of the parties to the test, it shall be examined prior to the test and cleaned, if necessary.

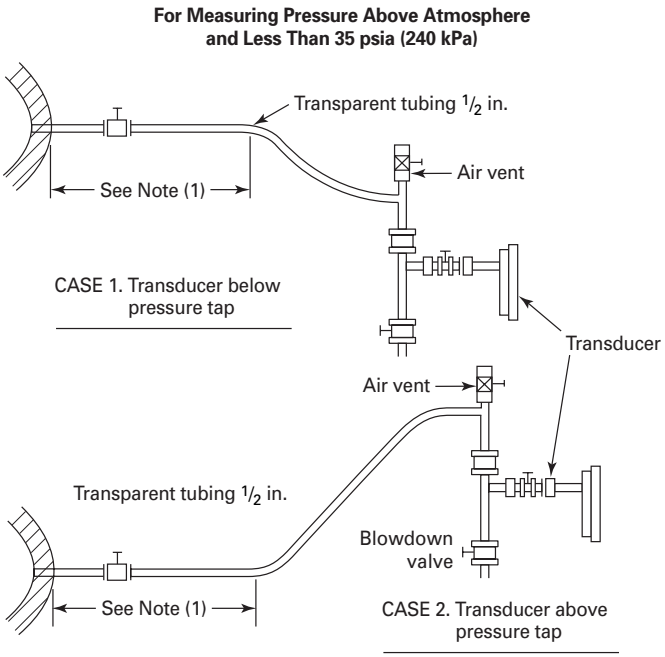

GENERAL NOTE: Caution must be exercised to ensure water fills connecting line completely.

NOTE:

(1) Horizontal run must be level within $^1/_8$ in.

Fig. 4-20 Connection Between Pressure Source and Transducer/Water-Filled Connection

Copyright ASME International
Provided by IHS under license with ASME
No reproduction or networking permitted without license from IHS
Not for Resale

4-17.29 Exhaust Pressure Measurement

The exhaust static pressure of a condensing turbine is to be measured at, or on either side of and adjacent to, the exhaust joint. Special locations of demonstrable accuracy may be used when agreed upon by the parties to the test, but in no case shall there be fewer than two such location, per exhaust annulus. When the test results are not available to determine the proper location, it is recommended that one pressure location be used for each 16 ft^2 (1.5 m^2) of free area at the joint but in no case more than eight for each exhaust annulus. The pressure to be considered is the average of all of them. A discrepancy in excess of 0.1 in. (2.5 mm) Hg between simultaneous readings is to be cause for investigation. Larger exhaust areas are commonly subject to spatial variations exceeding 0.1 in. (2.5 mm) Hg.

4-17.30

The exhaust joint shall be the junction where the turbine exhaust is attached to the flange of an expansion joint or a condenser or welded to the condenser neck.

4-17.31 Absolute Pressure Gages

Differential pressure transducers with limited span or absolute pressure transducers shall be used. If differential pressure gages are used for measuring low absolute pressures, they must be referenced to a vacuum of 30 μ of mercury or fewer. Alternatively, manometers of the type known as absolute pressure gages may be used. Transducers or absolute pressure gages shall be compared with a manometer and barometer of known accuracy, as specified in the following paragraph, immediately before and after each test run. Errors found in excess of 0.01 in. (0.25 mm) shall require investigation, and the discrepancy shall be eliminated. If a discrepancy in excess of the above limit is found between a manometer-and-barometer combination and the transducer or the absolute pressure gage, it shall not be assumed that the error is in these instruments; both they and the barometer shall be the subject of investigation.

4-17.32 Manometers

Manometers may also be used. The tubing shall be not fewer than $^7/_{16}$ in. (11 mm) bore at the point where measurements are made. All the precautions required for low-pressure measurements shall be employed. The manometers shall have scales, riders, and verniers so that they may be read to within 0.01 in. (0.25 mm). The scales of manometers shall be calibrated so that they may be correctly read to within 0.01 in. (0.25 mm).

For low-pressure measurements, the manometer must be scrupulously cleaned before the indicating fluid is introduced. Tubing may be dried by rinsing with alcohol or heating.

4-17.33

For small exhaust conduits, requiring not more than four gages, where the walls are straight in the direction of flow and flow is likely to be uniform, all of the pressure connections may be located in the walls of the conduit. Such connections shall be made in conformity with para. 4-17.21, except that the hole diameter at the open end shall be $^3/_8$ in. (10 mm). The other end of the hole may be of any size suitable for the pipe connection.

4-17.34

Where the above conditions do not exist, the pressure connections should be carried into the interior of the conduit and provided with basket tips or guide plates. Basket tips are preferred. If the exhaust is provided with ribs or braces traversing the steam space, some of the gage piping connections may pass through them with the opening flush and normal to the surface of the rib. The terminals of exhaust-pressure-gage connections shall be distributed over the entire exhaust-conduit area and located so that they will be centered, as closely as practicable, in equal areas. The basket tips should be installed at a 45 deg angle, as shown in Fig. 4-21.

Alternatively, guide plates may be used and should be arranged so that the steam flow is perpendicular to the pressure tap as shown in Fig. 4-22.

Careful attention must be given to the location of basket tips and guide plates because pressures at certain points at the exhaust joint may be influenced by local high steam velocities.

4-17.35

Upon agreement by the parties to the test, special pressure taps of demonstrated accuracy may be em-

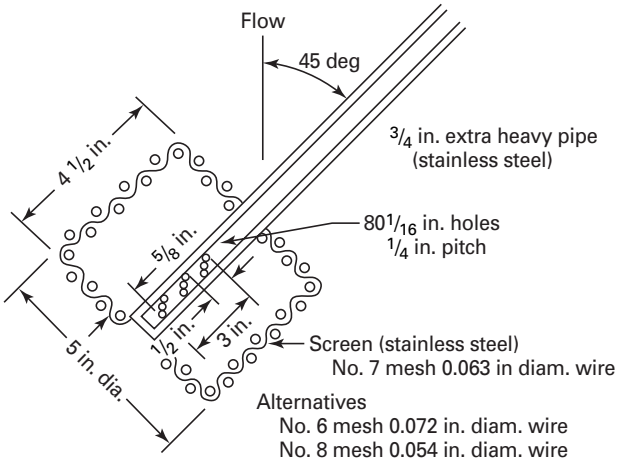

Fig. 4-21 Basket Tip

Copyright ASME International
Provided by IHS under license with ASME
No reproduction or networking permitted without license from IHS
Not for Resale

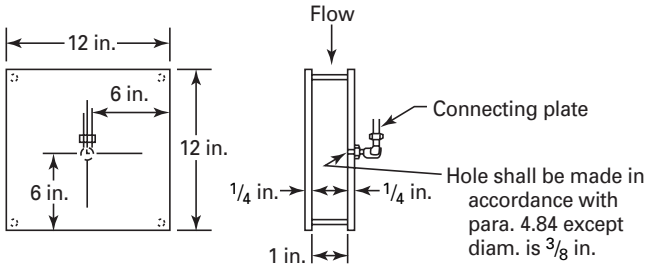

Fig. 4-22 Guide Plate

ployed provided they are completely described in the test report.

4-17.36 Absolute Pressure Determination

Measured pressures shall be corrected by the following, as applicable:

(a) the instrument reading, using the proper conversion factors for the measuring fluid (refer to PTC 19.5)

(b) the negative correction for manometer temperatures to 32°F (0°C)

(c) the instrument correction, including any scale correction required

(d) the gravity correction, correcting the reading to the value that would be obtained if gravity at the location of the instrument had the International Standard value of 32.174 ft/sec^2 (9.80665 m/s^2)

(e) the water-leg correction

(f) the measured barometric pressure, including the correction to the elevation of the gage

NOTE: For additional information concerning conversion of pressure units, see para. 2-5 of this Code and PTC 2, Definitions and Values.

4-18 MEASUREMENT OF TEMPERATURE

4-18.1 Acceptable Systems

Acceptable temperature test measurement systems shall meet a design and calibration criterion consistent with the following. Careful consideration must be given to the selection, installation, use, and interpretation of the temperature measuring system. Direction as to proper application of various systems can be found in the Instrument and Apparatus Supplement, Part 3, "Temperature Measurement," PTC 19.3. Any system that can meet the requirement of repeatability in its calibration and is proved accurate within the limits defined for the particular temperature measurement shall be deemed acceptable by the parties conducting the test. Accuracy is further discussed in para. 4-18.4 and repeatability of calibration in para. 4-18.7. PTC 6 Report, Guidance for Evaluation of Measurement Uncertainty in Performance Tests of Steam Turbines, does provide several tables which may offer some guidance. In general, Code-recommended temperature measurement systems have an uncertainty of ±1°F (0.5 K).

4-18.2 Recommended Systems

Recommended temperature measurement systems which have wide acceptance are generally defined as

(a) suitable platinum resistance-type thermometers, including proper leads calibrated and used in conjunction with random-bridge (0.03% accuracy) measuring instruments.

(b) suitable thermocouples with continuous thermocouple wires and integral cold junctions calibrated and used in conjunction with a random high-quality digital voltmeter (±0.03% uncertainty or better). When using digital voltmeters, proper guarding procedures shall be followed to minimize errors introduced by noise.

(c) calibrated thermocouples or random thermometers with an uncertainty not exceeding ±0.5°F (0.3 K) for cold junction ambient temperature reference measurements.

4-18.3 Locations

Location of temperature measurement sensors for enthalpy determinations shall be as close as practicable to the points at which the corresponding pressures are measured. Thermowells should be located downstream of the pressure taps or, if upstream, not in the same longitudinal plane. Temperature differences caused by flow stratification shall be minimized by locating the temperature sensor sufficiently downstream of an elbow, or an extraction nozzle, to allow mixing of the stratified flow before the measurement point.

Thermocouple and lead wires should not be run in the same cable trays as power lines to avoid sources of high electric fields. PTC 19.22 provides further guidance. Thermocouple lead wires shall not be subjected to large temperature gradients. Wire nonhomogeneities in the region of large temperature gradients can cause unacceptable measurement errors.

Copyright ASME International
Provided by IHS under license with ASME
No reproduction or networking permitted without license from IHS
Not for Resale

4-18.4 Influential Temperatures

Temperatures which have the most influence on test results shall each be taken at two different points in close proximity but not in the same thermowell. Thermowells must be installed within 4 pipe diameters and may be in line, axially, if installed at least 2 pipe diameters apart. If installed within 2 pipe diameters, the thermowells must be at least 45 deg apart measured circumferentially. The mean of the two readings shall be considered the temperature of the fluid. Discrepancies between the two readings must be resolved if these exceed 1°F (0.5 K). The recommended locations for these temperature measurements are shown on the test instrumentation diagrams of Figs. 4-11(a) through (e). The use of dual thermocouple elements does not satisfy Code requirements of critical temperature measurements at two different points.

4-18.5 Wells

Thermowells shall be installed in conformity with the ASME Boiler and Pressure Vessel or Piping Codes. Standards for thermowells are given in PTC 19.3. Generally

(a) Tubes and wells shall be as thin as possible, consistent with safe stress and other ASME code requirements, and the inner diameters of the wells shall be clean and dry and free from corrosion or oxide.

(b) The temperature-sensitive element shall fit closely in the well, being held firmly against the bottom.

(c) Thermowells, and any extensions, shall be carefully covered with an insulating material to reduce air circulation and conduction of heat away from the tip.

(d) Unless limited by design considerations, the temperature-sensitive element shall be immersed in the fluid at least 3 in. (75 mm) but not less than one-quarter of the pipe diameter. In pipes of less than 4 in. (100 mm) diameter, the element must be arranged axially in the pipe, by inserting it in an elbow or tee. If such fittings are not available, the piping shall be modified to render this possible.

(e) In measuring the temperature of flowing media, the heat-receiving part of the apparatus shall not be in a dead space.

4-18.6 Cold Junctions

The temperature of cold junctions shall be measured accurately. The accuracy with which the temperature of the measuring junction is measured can be no greater than the accuracy with which the temperature of the cold junction is known. The cold junction temperature shall be held at the ice-point or stable temperature of an isothermal reference. When thermocouple cold junctions are immersed in a water-ice bath, the bulb of a random thermometer shall be immersed at the same level as the cold junctions and in contact with them. Any deviation from the ice-point shall be promptly corrected. Each cold junction shall be electrically insulated. When the isothermal-cold-junction reference method is used, it shall employ an accurate temperature measurement of the reference heat sink acceptable to the parties conducting the test.

Appropriate conversions for the isothermal cold junction temperature shall be used.

When electronically controlled reference junctions are used, they shall have the ability to control the reference temperature to within ±0.05°F (0.03 K). Particular attention must be paid to reference junctions using terminals, since wire mismatching can introduce errors.

Particular attention must be paid to the terminals of any referenced junction, since errors can be introduced by temperature variation, material properties, etc. By calibration, the overall reference system shall be verified to have an uncertainty of less than ±0.2°F (0.1 K). Isothermal thermocouple reference blocks furnished as part of digital systems may be used for turbine tests run in accordance with the Code, provided the accuracy is equivalent to the electronic reference junction.

4-18.7 Calibration

Calibration of thermocouples and resistance thermometers shall be made before and after the test. If the calibrations differ by more than 2°F (1 K), the temperature measurement shall be in doubt, and resolution of the difference by the parties to the test shall be made, taking into consideration the effect on overall test accuracy. During the calibration of any thermocouple, its cold junction shall be held at the ice-point with an electronic reference junction, isothermal reference junction, or in a water-ice bath. The calibration shall be made by an acceptable method, with the standard being traceable to a recognized national standards laboratory, such as the National Institute of Standards and Technology. Acceptable calibration methods are to be conducted over the temperature range in which the instrument is to be used by one of the following procedures:

(a) By comparison with freezing-point baths of water, or of certified samples of metals with suitable melting points, such as tin, lead, and zinc. The temperature in the bath shall be read on a standard platinum resistance thermometer during the calibration to detect and reject a contaminated bath or an improper method.

(b) By comparison with condensing-point baths of certified samples of substances with suitable boiling points, such as water and sulfur. The temperature in the bath shall be read on a standard platinum resistance thermometer during the calibration to detect and reject a contaminated bath or an improper method. The barometric pressure at the bath must be read, since boiling temperatures vary with atmospheric pressure.

(c) At intermediate or extreme temperatures, by comparison with a standardized platinum resistance thermometer in a controlled-temperature copper block or other suitable source of uniform temperature.

Copyright ASME International
Provided by IHS under license with ASME
No reproduction or networking permitted without license from IHS
Not for Resale

4-18.8 Handling of Equipment

Random test equipment, such as thermocouples and resistance thermometers and their potentiometers, bridges, galvanometers, or other measuring instruments and electronic reference junctions, must be carefully handled, maintained, and periodically checked for uniformity and stability. The potentiometers, together with their standard cells and electronic reference junctions shall be set up in position not less than 3 hr before a test is started for subjection to the prevailing ambient temperature and stabilizing the standard cells.

4-19 METHODS OF DETERMINING STEAM QUALITY

Steam quality cannot be measured directly. It can be determined from pressure and enthalpy. The following methods may be used, as applicable, to determine steam quality.

(a) tracer technique, radioactive or nonradioactive (for throttle and extraction steam)

(b) heater drain flow measurement and heat balance (extraction steam only)

(c) throttling calorimeter (throttle steam only)

Selection of one of these methods for determining steam quality must be based on the conditions of the steam-supply system under consideration, since each method has limitations that govern its use.

4-19.1 Tracer Technique

4-19.1.1 Method. Both radioactive and nonradioactive tracers have been used for determining steam quality of throttle and extraction steam of steam turbines operating predominantly within the moisture region with nuclear steam supply systems. A description of the tracer technique is included in the following paragraphs.

Steam sampling, with respect to the type of probe, its location, and method of withdrawing the sample, shall be performed in accordance with the ASTM "Method of Sampling Steam," D 1066. Inherent limitations in the probe-sample techniques may make it difficult to obtain a representative steam line sample (also see PTC 19.11, Fans). The tracer technique has the advantage that it does not require a representative sample of the water-steam mixture. Only a sample of the water phase is required.

The radioactive technique utilizes sodium 24 as the tracer. The principle of this technique is that the sodium salt is distributed by a large ratio (on the order of 10^7:1) into the liquid phase. Thus, by injecting a known concentration of radioactive salt at a known rate, sampling downstream from the injection point, and measuring the concentration of sodium in the liquid phase, it is possible to calculate the flow rate of the liquid phase. The enthalpy of the wet steam is determined from this measurement of water phase and extraction steam flows, which is calculated from an energy balance around the feedwater heater.

Since the previous edition of the Code was issued, improvements have been made in developing a nonradioactive tracer that would overcome inherent limitations with radioactive tracers and be suitable for use in nuclear power plants having PWR or BWR nuclear steam supply systems. These limitations include a 15 hr half-life for sodium 24, as well as the need for relatively complex handling and analysis procedures.

Sodium, lithium, and potassium salts have all been used as a nonradioactive tracer, depending on the specific type of reactor configuration and known elemental chemical background of the feedwater. In order to achieve sufficient accuracy utilizing the nonradioactive technique, proper selection and calibration of the injection and detection equipment are essential. (Reference "On-Line Measurement of Feedwater Flow and Steam Generator Moisture carry over using Chemical Tracers," ANS-ASME topical meeting April 1988).

4-19.1.2 Implementation. Successful use of the tracer technique requires the use of highly accurate instrumentation for measuring mass and concentration of tracer used. Also very important is the achievement of good mixing of tracer injected into flow paths, so as to obtain a homogenous sample from a downstream tap.

The use of a spray nozzle or tube to get the injected tracer into the interior of the pipe and away from the wall will promote more thorough mixing. Good mixing is also a function of distance between injection and sample points. The maximum distance available should be used. In some situations, the available distance may be inadequate for sufficiently accurate determination.

For an extensive description of the tracer technique, including tracer requirements, design of inspection and sampling systems, radioactivity measurements, and computations, refer to PTC 19.5, which deals with measurement of water flow rates with tracers.

An outline of various uses for steam quality determination is included below.

Delay time, the time of transit of the tracer from the injection device to process tap to sample collection device, must be accounted. Therefore, measure the time of sampling, injection, and counting to the nearest minute.

4-19.1.3 Condensing Method. An appropriate tracer, dissolved in the water-phase of wet steam at concentration C_w, will be diluted by condensation of vapor. After the steam is totally condensed, the tracer concentration in the condenser will be C_c. The concentrations are related by the balance.

$$C_w w = C_c w_c$$

where

w = amount of water in wet steam

w_c = amount of condensate from wet steam

With the tracer concentrations known from test mea-

Copyright ASME International
Provided by IHS under license with ASME
No reproduction or networking permitted without license from IHS
Not for Resale

surements before and after condensation, steam wetness fraction (moisture) is represented by the ratio:

$$M = w/w_c = C_c/C_w$$

4-19.1.4 Throttle Steam Quality. Throttle steam quality can be calculated from the quality and pressure of the steam leaving the steam generator and throttle-steam pressure, using a constant-enthalpy process, since thermal radiation losses from the connecting steam piping are generally negligible. The moisture in the steam leaving the steam generator is the result of water carryover. Thus, a tracer present in the steam generator water will also be found in the steam leaving the steam generator. In nonreheat cycles, the tracer will finally be diluted in the total flow going back to the steam generator. By the application of the condensing method, steam generator exit moisture can be evaluated using the second equation from para. 4-19.1.3.

In the case of reheat cycles, the error in throttle steam moisture determination caused by plating out of the tracer in the reheaters is negligible because the external moisture-separator effectiveness is essentially 100%. However, there is always the possibility of measuring the moisture carryover of the steam generator during special tests with the reheaters out of service.

There are two methods of determining C_w, the tracer concentration at the water-steam interface or in the carryover moisture. For steam interface with upper-shell sample taps, this concentration may be measured directly based on a sample taken from these taps. For steam generators without upper-shell-sample taps, C_w is determined from a blowdown sample, which is corrected for concentrating effects through the tube bundle as shown in Figs. 4-23 and 4-24. Determination of the concentration in the total flow, C_c, depends on the arrangement of feedwater heaters. On cycles with cascading heaters, total flow usually exists at the discharge of the condensate pumps. On other cycles, if the demineralizers are bypassed during the test, C_c will be the tracer concentration in the final feedwater. In all cases, effects such as external-tracer sources feeding into the cycle or losses of tracer, caused by demineralizers, must be taken into account.

4-19.1.5 Extraction Enthalpy by Condensing Method. The condensing method may also be used to determine wet extraction steam enthalpy. This method is particularly attractive if a suitable tracer is already present in the steam path. However, error analysis shows that accurate results can be obtained only on heaters without cascading drains.

With this method extraction, enthalpy is evaluated from an energy balance and a tracer balance around the heaters. For the tracer balance, the concentrations of the tracer in all flows to and from the shell side of each heater are needed. Sampling the heater drains for concentration measurement of the tracer is fairly easy, as this is only single-phase flow. Sampling water out of the extraction line requires the same precautions as the case of the injection method.

4-19.1.6 Constant Rate Injection Method. A water soluble tracer of concentration C_{inj} is injected at a constant rate wini into the vapor-water flow where moisture is to be measured. The concentration C_w is measured in the water phase downstream of the injection point after adequate mixing has taken place. For this condition, the following material balance can be written:

$$C_o w + w_{inj} C_{inj} = (w + w_{inj} + \Delta w) C_w$$

or

$$w = \frac{w_{inj}(C_{inj} - C_w) - \Delta w C_w}{C_w - C_o}$$

where

w = mass flow rate of water in vapor-water mixture
C_o = initial concentration in the water phase at the sampling points, before injection starts, due to natural amounts of tracer (background concentration)
Δw = change in water flow (condensation of vapor due to injection of the cold-tracer solution)

Normally $C_w \ll C_{inj}$, $C_o \ll C_w$, and $\Delta w \ll w_{so}$ that the above equation is reduced to

$$w = w_{inj}\,(C_{inj}/C_w)$$

which gives the mass flow rate of water in the vapor-water mixture at the sampling point.

4-19.1.7 Extraction Enthalpy by Constant Rate Injection Method. If the flow rate of the water phase in the extraction line to a feedwater heater is known, wet-steam enthalpy can be calculated by energy balance around the heater, as shown in "Sample Calculations," PTC 6A, a separate publication of PTC Committee No. 6. The water flow rate can be measured with the constant-rate injection method. Measuring flow rate and concentration of the tracer solution and maintaining a constant injection rate is comparatively simple. However, the tracer concentration in the water-phase downstream of the point of injection can be accurately determined only if the tracer is well mixed and a sample of the liquid-phase can be obtained.

(*a*) *Injection Points.* For the sample to be truly representative, the tracer must be homogeneously distributed in the water phase. The injection point should, therefore, be located immediately downstream of the extraction flange of the turbine, and the sampling point should be close to the heater. A long run of pipe with several elbows will promote mixing. Use of a spray nozzle for injecting assures better mixing and is recommended.

(b) Sampling Points. Since any condensed vapor in the sample will falsify the result, care must be taken in selecting the location of the sampling tap. At the conditions

Copyright ASME International
Provided by IHS under license with ASME
No reproduction or networking permitted without license from IHS
Not for Resale

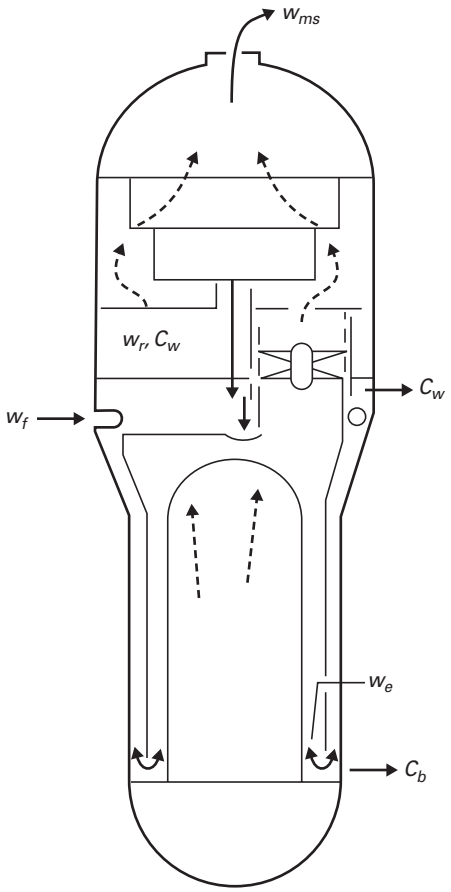

w_{ms} = main-stream flow
w_f = feedwater flow under steady state, $w_f = w_{ms}$
w_r = recirculated flow
w_e = entry flow
$w_e = w_r + w_f$
C_b = blowdown-tracer concentration
C_w = tracer concentration at water-steam interface
$R = \frac{w_{ms}}{w_e}$, (inverse of circulation ratio)

$$w_r = w_e - w_{ms} = \frac{w_{ms}}{R} - w_{ms} = (1 - R)\frac{w_{ms}}{R}$$

$$C_w = \frac{C_b W_e}{W_r} = \frac{C_b\left(\frac{w_{ms}}{R}\right)}{(1 - R)\frac{w_{ms}}{R}} = \frac{C_b}{1 - R}$$

Fig. 4-23 Throttle Steam Quality Calculations for Pressurized Water Reactor

and velocities normally found in extraction lines, the water is not homogeneously distributed over the cross-section but is concentrated toward the pipe wall. This is a favorable distribution for water sampling; therefore, a simple wall tap should prove satisfactory. However, advantage should be taken of gravitational or centrifugal forces by locating the tap on the bottom side of the pipe or outer radius at the exit of an elbow, care being taken to avoid deadflow regions. All moisture removal points or other connections between the injection and sampling points shall be isolated while taking tracer data. Fig. 4-25 shows a typical installation of injection and sampling points. In cases where the extraction line is very short, such as with heaters installed in condenser necks, there is insufficient length of pipe for good mixing, and this method should not be attempted.

In such cases, it is recommended that the water sample be taken from the heater drains. Also, in cycles with pumped-ahead drains, the above method will yield accuracy equal to the injection method without any additional instrumentation. In cycles with drains cascading to the condenser, the upstream drains must be diverted directly to the condenser so as to accommodate total cascade flow at full load. The diversion method should be employed prior to the heat rate test.

(c) Sampling Flow Rates. The sampling flow rate must be adjusted so that entrainment and subsequent condensation of vapor is prevented. The maximum allowable sampling rate can be determined, for example, by analyzing the sampling stream for dissolved oxygen. Oxygen (20 ppm to 30 ppm) is naturally present in the steam from boiling water reactors as a result of radiol-

Copyright ASME International
Provided by IHS under license with ASME
No reproduction or networking permitted without license from IHS
Not for Resale

ysis. The sampling flow rate shall be determined prior to conduct of the heat rate test. The oxygen content shall be measured for various sampling flow rates and plotted, as shown in Fig. 4-26. The flow rate at which steam starts to entrain in the sample is evidenced by a sharp rise in oxygen content. The validity of using oxygen or other suitable tracer as a means of tracing the vapor fraction is based on the distribution of oxygen between the liquid and vapor phases.

At pressures fewer than 500 psia (3450 kPa), oxygen is almost entirely in the vapor-phase.

In pressurized water reactor plants (PWR), a suitable tracer, such as xenon 133, could be used. However, it may be more convenient to add Na 24 and note the sample rate at which the concentration falls off, indicating entrainment of condensed steam.

4-19.1.8 Requirements for Tracers. For these methods to give accurate results, tracers shall meet these criteria.

(a) soluble in water but essentially insoluble in steam (fewer than 0.1% at the test steam conditions)

(b) nonvolatile

(c) stable at the conditions existing in the turbine cycle

(d) not adsorbed on internal surfaces (provided that the water is not evaporated completely)

(e) mixed completely and homogeneously with all the water available at any instant

The choice of the tracer is determined by the criteria mentioned in the foregoing, plus considerations of the effects of the tracer on materials in the cycle, and possible hazards to operating personnel. The generation of light-water reactors in use when this publication was prepared was designed for pressure and temperature levels that permit a number of tracers to meet these criteria. At higher pressure levels, it may be more difficult to meet these criteria, and other tracers may be necessary.

Radioactive tracers are particularly attractive for application in nuclear power plants, where licensing required for possession and handling of radioactive materials presents no particular problem. Tracer concentrations of fewer than one part per billion can be accurately measured using gamma-counting techniques. For steam

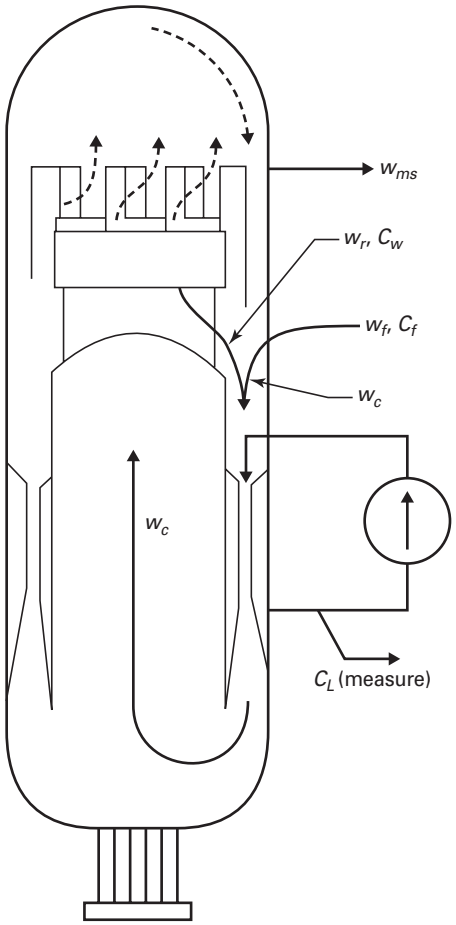

w_{ms} = main-stream flow
w_f = feedwater flow, under steady-state, $w_f = w_{ms}$
w_r = recirculated flow
w_c = core flow
$w_c = w_r + w_f$
C_L = reactor recirculation loop-tracer concentration
C_f = feedwater-tracer concentration
C_w = tracer concentration at water-steam interface
$R = \frac{w_f}{w_c}$, (inverse of circulation ratio)

$$C_w(w_c - w_f) + w_f C_f = w_c C_L$$

$$C_w = \frac{w_c C_L - w_f C_f}{w_c - w_f}$$

Since $C_f << C_L$ and $w_f < w_c$

Then $C_w = C_L \frac{w_c}{w_c - w_f} = \frac{C_L}{1 - R}$

Fig. 4-24 Throttle Steam Quality Calculations for Boiling Water Reactor

Copyright ASME International
Provided by IHS under license with ASME
No reproduction or networking permitted without license from IHS
Not for Resale

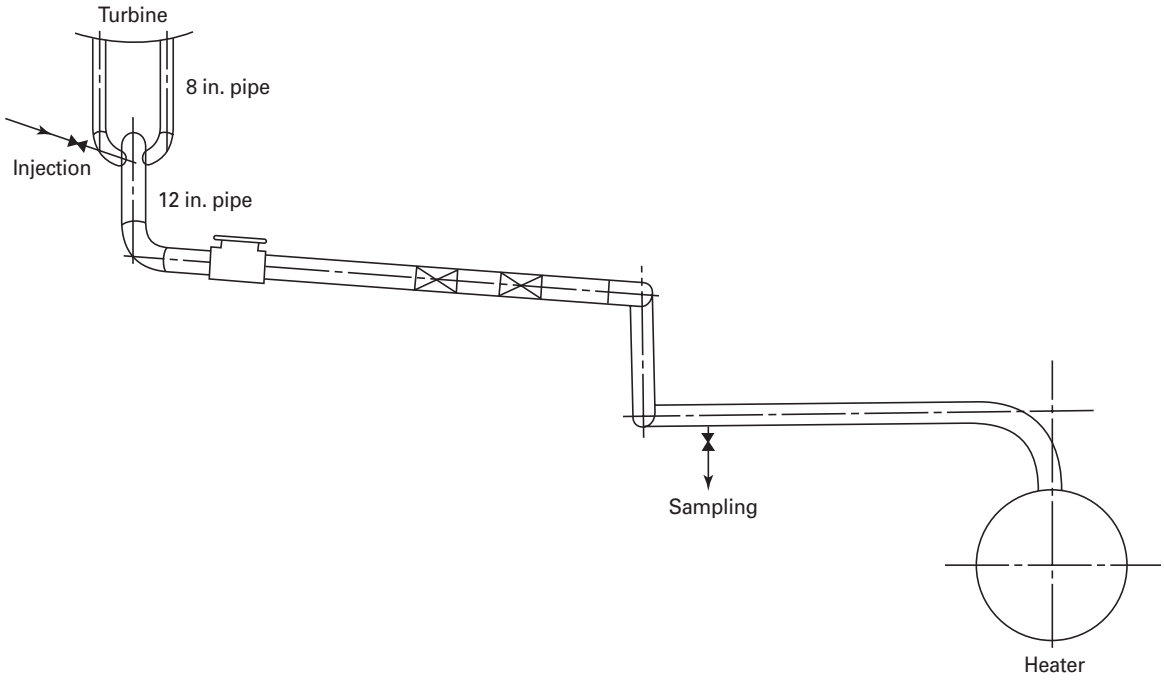

GENERAL NOTE: See para. 4-19.1.7(b) for precaution concerning isolation.

Fig. 4-25 Typical Installation of Injection and Sampling Points

cycles with very low radioactive background, the tracer activity concentration required for accurate testing is very small; however, the tracer should be a short-lived isotope to eliminate long-term contamination problems. Since it is not practical to measure the concentration of the samples simultaneously, it will be necessary to apply a correction to the measured concentration of each sample to account for isotope decay. One of the tracers that meets these criteria is 15 hr Sodium 24. If the tracer technique is used to determine throttle and extraction steam quality and heater leakage, there is some advantage to using three different radioactive tracers.

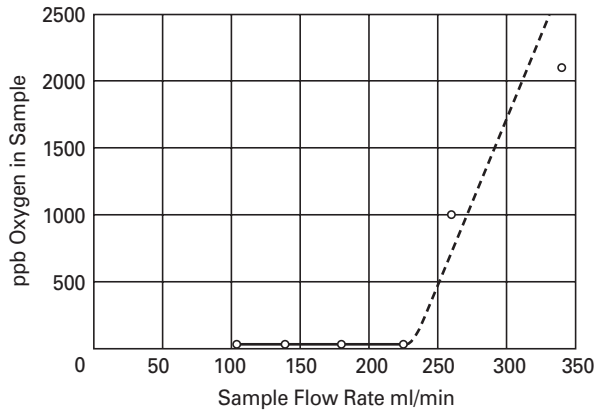

Fig. 4-26 Oxygen Content of Sample

4-19.2 Extraction Enthalpy by Heater Drain Flow and Heat Balance

The quality of steam in an extraction line can be determined from a measured pressure and an enthalpy derived from a heat balance around the heater. This requires the measurement of the drain flows into and out of the heater in question (see para. 4-16.7). These flows can be measured by use of orifice plates nozzles, venturis, or tracer. Care must be taken to avoid cavitation in low-pressure heater drains (see para. 4-16.2).

4-19.3 Calorimeter Method

Observations by means of a properly constructed calorimeter will provide the means for accurately calculating the percentage moisture present in a given sample. The difficulty is that there can never be assurance that the sample is representative of the average condition of the steam flowing in the pipe. Steam sampling, with respect to the type of probe, its location, and method of withdrawing the sample, shall be performed in accordance with the ASTM "Method of Sampling Steam," D-1066. Inherent limitations in the probe-

Copyright ASME International
Provided by IHS under license with ASME
No reproduction or networking permitted without license from IHS
Not for Resale

sample technique make it extremely difficult to obtain a representative steam line sample. Techniques for sampling are described in PTC 19.11, which should be consulted if calorimeters are used.

4-20 MEASUREMENT OF SPEED

4-20.1

For nonelectrical tests, or any test in which speed is an important factor in the calculation or correction of the test result, the speed shall be determined by means of the following:

(a) an electronic-integrating counter that counts pulses generated by a magnetic or photoelectric pickup that responds to the passing of a device connected directly to the rotor of the turbine or driven machine, or by

(b) a mechanical-integrating counter directly geared to some portion of the rotor of the turbine or driven machine

4-20.2

The electronic-integrating counter may be

(a) one that counts the revolutions for the entire period, or

(b) one that counts for a brief period, such as an exact fraction of a second, then converts this to revolutions per minute, which is presented on a digital display until it is replaced by the next second's conversion

4-20.3

If the counter integrates the revolutions for the whole period of the test, the average speed shall be determined from the total number of revolutions of the test period. The time of the counter observation at the beginning and end of the test shall be correct within 1 sec. The counter reading at uniform intervals of time shall be recorded with the corresponding speed in order to make certain that the initial and final values are proper and direct-reading device is not in gross error.

4-20.4

If the counter integrates the revolutions for short periods and converts them to a display of revolutions per minute, the average speed shall be calculated as the average of readings of the display at uniform intervals throughout the test period.

4-20.5

In addition to a counter that integrates for the entire test period, a direct-reading, speed-measuring device shall be employed in order to ascertain that the speed is maintained during the tests within the limits in Table 3-1.

4-21 MEASUREMENT OF TIME

4-21.1

The time of test periods and other observations may be determined by the following:

(a) signals from a quartz digital clock, which has been sychronized with a master time signal if the tests require starting or stopping certain readings simultaneously.

(b) observations of watches by the individual observers.

4-21.2

If signals from quartz watches are employed, the signaling means shall be such that the signal may be received within $1/2$ sec of the desired time. Reliable watches or clocks shall be employed having an accuracy with one minute per 24 hr period. Watches and clocks shall be synchronized with each other at the start of the test.

4-22 MEASUREMENT OF WATER LEVELS

Water levels in the condenser hotwells, storage tanks, and other points of water accumulation necessary for the determination of changes in system storage shall be measured to the closest $1/4$ in. (6 mm) with appropriate linear scales.

Copyright ASME International
Provided by IHS under license with ASME
No reproduction or networking permitted without license from IHS
Not for Resale

Section 5
Computation of Results

5-1 DEVIATIONS FROM SPECIFIED OPERATING CONDITIONS

Performance computation for various turbine types is described in the following paragraphs. Generally, all operating conditions cannot be maintained at the specified values. It is necessary, therefore, to correct test performance for deviations from specified values, using the methods outlined in this Section.

This will assure comparison of the results of the test on the turbine with the specified performance on the basis of an equivalent cycle. However, deviations in conditions should be as small as possible to minimize the effect of uncertainties due to the required corrections (see para. 3-8.3). For the development of correction formulae and numerical examples of their application, see Appendix A to Test Code for Steam Turbines, PTC 6A, a separate publication of PTC Committee No. 6.

5-2 TEST RESULTS

Calculations to obtain preliminary test results should be made concurrent with the testing. This provides an opportunity for early examinations of the test data and discovery of observer errors, instrument errors or failures, and other causes for repeated tests; it also determines whether the tests are consistent and acceptable and permits test instrument removal with the confidence that no further tests are required. The following checks are recommended:

(a) a water-balance calculation.

(b) a plot of overall efficiency versus the ratio of first-stage to throttle pressure, or flow, for each major turbine section whose inlet and outlet steam is superheated. "Overall efficiency" refers to the ratio of the measured to the isentropically available enthalpy difference between inlet and outlet pressures. For consistent steam temperature measurements, a smooth curve with all points within 0.25% of the curve will result for the following cases:

(1) high-pressure turbine tested at valve points

(2) high-pressure turbine tested with constant arc of admission and variable throttle pressure

(3) intermediate pressure turbine test (this turbine has constant arc admission)

If the high-pressure turbine is tested at valve and intermediate points, the latter will form a valve loop curve that departs from the locus-of-valve-points curve. A discontinuity in the locus curve at the primary valve point is also possible. For an example of a turbine efficiency calculation, see PTC 6A.

Turbine section efficiencies are easily determined and useful in the early validation of test results. These efficiencies are also important indicators of turbine performance and can be used for periodic monitoring and comparison with expected performance.

(c) Where turbine elements, operating entirely in the superheat region, drive a measureable load, enthalpy differences and calculated blade-path steam flows can be used to compare the calculated output with the measured output. If test data are consistent, the output should agree within 0.25%.

(d) The ratio of steam flow to the following stage, w_{fs}, to $\sqrt{(p/v)}$ at each extraction opening and the inlet to each major turbine section may be plotted as an ordinate against that flow as an abscissa. If test data are consistent, this plot will approximate a horizontal straight line.

For turbines using wet steam, the ratio $w_{fs},/\sqrt{(p/v)}$ increases directly with moisture content, due to the drag effect of moisture droplets in the steam. Experience shows that this increase is best approximated by dividing $w_{fs},/\sqrt{(p/v)}$ by $(1 - M)$, thus:

$$\frac{w_{fs}}{\sqrt{\frac{P}{v}}} \frac{1}{\sqrt{1 - m}}$$

where

$_{fs}$ = following stage
M = the moisture fraction at the inlet to the group in question

5-3 TEST DATA REDUCTION

Test data must be averaged and corrected for instrument calibrations, water legs, zero readings, barometric pressure, and ambient temperature. Following this, steam and water enthalpies can be determined and flow rates calculated. Flow rate is proportional to the square root of the pressure difference across a flow-measuring device. The reduction of differential pressure data should, therefore, be based on the average of the square root of the various readings. Guidance on test data reduction is provided in PTC 19.1.

Copyright ASME International
Provided by IHS under license with ASME
No reproduction or networking permitted without license from IHS
Not for Resale

5-4 THROTTLE-STEAM FLOW

5-4.1 Test Throttle Flow

Test turbine throttle flow is determined by combining the measured primary flow with the appropriate extraction, leakage, makeup, and gland sealing steam flows and correcting for the effects of applicable water level changes in cycle storage vessels.

5-4.2 Corrected Test Throttle Flow

When a corrected turbine throttle flow is required, the following equation shall be used:

$$w_s = w_t \sqrt{\frac{p_s v_t}{p_t v_s}}$$

This is the flow that would pass through the throttle with the same turbine valve setting but with the specified throttle conditions.

For throttles using superheated steam, throttle flow must be corrected to the specified pressure and temperature. For turbines using wet steam, throttle-steam flow must be corrected to the specified pressure and quality.

5-5 CAPABILITY

When a turbine is tested for capability of maximum output, it is essential that the valve mechanism be in proper adjustment to obtain full opening of all steam admission valves. The measured output must be corrected for deviations from the specified operating conditions by means of the methods described in the following paragraphs. For regenerative turbines, this includes corrections for deviations from the specified cycle.

5-6 STEAM RATE

Steam rate is the usual measure of performance for turbines operating at only one inlet pressure and temperature and discharging all flow at another pressure. Steam rate is expressed in lbm/kWhr (kg/kWh) or lbm/hp-hr and numerically equals w_1/P.

5-6.1 Corrections to Steam Rate

For a given turbine-valve setting, steam rate is corrected to specified operating condition by the following procedure:

(a) Correct the measured generator output for deviation from specified values of power factor and hydrogen pressure. Values from appropriate correction curves should be used.

(b) Determine the steam rate, which is the test throttle steam flow divided by the corrected generator output of item (a) above.

(c) Correct the steam rate for deviations from specified values of throttle pressure and temperature, exhaust pressure, and speed. Values from appropriate correction curves should be used.

(d) Correct the steam flow to specified throttle conditions for the test turbine valve setting, as described in para. 5-4.2.

(e) To evaluate test results, a plot of corrected steam rate versus corrected load can be compared with specified performance. This load equals the corrected throttle flow, w, divided by the corrected steam rate.

5-7 HEAT RATE

This is the flow that would pass through the throttle with the same turbine valve setting but with the specified throttle conditions.

5-7.1

For turbines operating in a regenerative or reheating cycle, steam rate is inappropriate as a measure of performance. The performance shall be expressed as a heat rate. The basic definition for heat rate is:

$$\text{Heat rate} = \frac{\text{Net heat to the cycle}}{\text{Output}}$$

"Net heat to the cycle" is the algebraic sum of all incoming and outgoing heat flows from the steam generator.

5-7.2

In addition to the heat supplied by the steam generator, additional heat may enter the turbine cycle from pumps in the feedwater circuit between the condenser and final feedwater. This heat is equivalent to the theoretical work of compression plus the internal losses of the pumps. This additional heat input results from power for the pumps supplied from external sources, the main shaft, or separate steam turbines. In determining the performance of this turbine, the heat input and power required must be considered.

5-7.3

Some installations use desuperheating water (sprays or heat exchangers) to control the throttle steam temperature. The enthalpy of the desuperheating water may differ from that of the feedwater leaving the highest pressure heater if the desuperheating water was taken from the feedwater heating circuit upstream of the final feedwater heater. This reduction in feedwater flow through the remaining feedwater heaters must be taken into account.

5-7.4

When desuperheating water is used to control the reheat steam temperature of a reheat turbine, the effect on

Copyright ASME International
Provided by IHS under license with ASME
No reproduction or networking permitted without license from IHS
Not for Resale

the turbine cycle performance must be taken into account. Steam resulting from the desuperheating water injected into the cold reheat steam line will enter the turbine at the pressure in the reheater and generate additional power, although at a lower level of cycle efficiency than that for steam entering the throttle. This will lower the overall performance of the turbine cycle and must be taken into consideration.

5-7.5

It is impractical to describe in this Code all the possible variations in turbine cycles. The calculations for performance must take into account specific conditions.

5-8 CORRECTION OF THE TEST RESULTS TO SPECIFIED CONDITIONS

5-8.1

Tests shall be conducted with the smallest possible deviation from specified conditions, in order to minimize correction errors (see Table 3-1 for limits of deviations). Corrections for deviations from the specified operating conditions may conveniently be separated into two groups, as follows.

5-8.2 Group 1 Corrections

This group includes corrections for variables primarily affecting the feed heating system. For convenience, corrections for generator-operating conditions are also included.

Examples of variables included in Group 1 are

(a) feedwater heater terminal temperature

(b) differences feedwater heater drain-cooler-approach differences

(c) extraction line pressure drops and heat losses

(d) system water storage changes

(e) feedwater enthalpy rise through condensate and feedwater pumps

(f) condenser-condensate temperature depression

(g) make-up feedwater flow

(h) desuperheating water used to control steam temperature

(i) power factor

(j) generator voltage

(k) generator hydrogen pressure

(l) speed (effect on generator losses)

Group 1 cycle corrections can be made by heat balance calculation or application of correction curves or tables. In the heat balance method, the test cycle may be corrected to the specified cycle or vice versa. Correcting the specified cycle to the test cycle requires manufacturer's design data that might be proprietary or unavailable legally. This latter approach is therefore not recommended.

Paragraphs 5-11.1 through 5-11.4 describe the correction of the test cycle to the specified cycle. In this approach, the test turbine efficiencies and test turbine shaft and steam leakages are used with the specified cycle conditions to calculate a "corrected test" cycle that is comparable with the specified cycle. Examples of this approach are presented in PTC 6A.

If correction curves or tables are used, it is recommended that, where possible, they should be specific to the test cycle. The use of correction curves may be required if the alternative procedure is used, due to the lack of sufficient test data for making the required heat balance calculation. Typical correction curves are presented in Section 8 of this Code.

5-8.3 Group 2 Corrections

This group includes corrections of variables primarily affecting the turbine performance. Examples of variables included in Group 2 are

(a) turbine initial steam pressure

(b) turbine initial steam temperature

(c) turbine hot reheat steam temperature

(d) turbine initial steam quality

(e) pressure drop of steam through the reheater system(s)

(f) turbine exhaust pressure

(g) speed (for mechanical drives)

(h) moisture separator effectiveness[1]

(i) reheater terminal temperature difference[1]

Corrections for the effect of Group 2 variables on heat rate and output are made by use of appropriate correction curves or tables.

5-9 CALCULATION OF TURBINE EXHAUST STEAM ENTHALPY

5-9.1

Turbine efficiency as obtained from test data is derived from two independent steam properties for each of several logical turbine points. When plotted on a Mollier diagram, these points form the basis of the turbine expansion line. For superheated steam, the measured pressure and temperature at the throttle, cold reheat, hot reheat, and cross-over may be plotted directly. Superheated extraction steam is hotter than the average steam passing through the turbine due to steam leakage through the clearances between the stationary and rotating blades. Superheated extraction state points, therefore, lie to the right of the expansion line. In most cases, the turbine exhaust steam, and in some cases, extraction steam, is not superheated. The enthalpy at these points is then determined by a turbine energy balance.

(a) For turbines using superheated steam, the following iterative procedure is used:

[1] Correction applied only if equipment is not provided under the turbine contract.

Copyright ASME International
Provided by IHS under license with ASME
No reproduction or networking permitted without license from IHS
Not for Resale

(1) The extraction steam flow to each feedwater heater is determined by heat balance around the heater. The steam enthalpy for extraction points in the wet region is estimated by extrapolation of the test expansion line which is a smooth curve drawn between the LP inlet and LP exhaust state points. For the first trial, the LP exhaust enthalpy must be estimated.

(2) The enthalpy of the turbine exhaust steam is determined by a turbine energy balance. Generally, this is:

$$w_1h_1 + w_3h_3 - w_2h_2 - w_{Ei}h_i - \cdots - w_{En}h_{En} - w_6h_6 - w_{pLi}h_{pLi} - \cdots - w_{pLn}h_{pLn} = K(P_g + \text{Electrical losses, kW} + \text{Mechanical losses, kW})$$

where

K = a constant depending on the units of P, w, and h.

The w's include all flows chargeable to the turbine cycle. If P is in kW, w in lbm/hr, and h in Btu/lbm, then $K = 3412.14$.

In the above equation, the symbol w_2 refers only to the steam flow returned to the reheater and $w_3 = w_2 + w_{a2}$. The value w_6 can be determined by flow balance. Generator losses, determined from appropriate data, must correspond to the actual generator-operating conditions. Since all other items are known, the equation can be solved for the enthalpy of the exhaust steam, h_6. The value of w_6 is influenced by the values read from the expansion line for enthalpy of steam to any heaters using wet steam. See para. 5-9.3(a) for a description of the iterative process.

(b) For turbines using wet steam, the enthalpy of the exhaust steam is determined using the procedure outlined below.

(1) The extraction steam flow to each feedwater heater can be determined by direct measurements of the heater drains, difference of measurements of drains from adjacent heaters, or applying the tracer techniques and heat balance. The steam enthalpy for extraction points in the wet region is calculated by performing an energy balance about each heater using the available measured values of pressure, temperature, moisture, and flow. These enthalpies are the average for the flow through the extraction pipe. They are used to determine the heat flow from the turbine to the heaters in the overall energy balance which determines turbine exhaust steam enthalpy. Each extraction state point in the moisture region represents a mixture of wet steam and free water[2] drawn out with the steam. If the extraction steam superheat (minimally 27°F, 15K) permits determination of the enthalpy by measurement of pressure and temperature, a more accurate enthalpy will result than that obtained by the heat-balance method previously described. The enthalpy of the high-pressure exhaust steam entering the moisture separator is determined by balancing mass and energy about the reheater and moisture separator in sequence and solving for the enthalpy by heat-balance calculations.

[2] Free water is defined as the water in the turbine through-flow that leaves with the extraction steam.

(2) With known extraction flows and enthalpies, mass and energy are each balanced, thus determining exhaust flow and associated enthalpy. This enthalpy is also referred to as the "used energy end point" (UEEP) or "turbine end point" (TEP). The general expression is:

$$w_1h_1 - w_{Ei}h_{Ei} - \cdots - w_{En}h_{En} - w_6h_6 - w_{pLi}h_{pLi} - \cdots - w_{pLn}h_{pLn} - (wh)_{\text{reheater drain}} - (wh)_{\text{moisture-separator drain}} = K(P_g + \text{Electrical losses, kW} + \text{Mechanical losses, kW})$$

where

K = a constant depending on the units of P, w, and h

If P is in kW, w in lbm/hr, and h in Btu/lbm, then $K = 3412.14$. The w's include all flows chargeable to the turbine cycle.

The exhaust flow w_6 is determined from a mass balance. Generator losses, determined from appropriate data, must correspond to the actual generator-operating conditions. As all other items are known, the equation can be solved for h_6, the enthalpy of the turbine exhaust steam. Since the calculated value of w_6 is influenced by the shape and slope of the expansion line, an iterative calculation as described in para. 5-9.3(b) is necessary.

5-9.2 Exhaust Loss

The team "exhaust loss" includes various energy losses occurring between the last stage of the turbine and condenser. It includes the energy loss due to the velocity remaining in the steam after leaving the last stage, loss due to pressure drop through the exhaust hood, and decrease in efficiency of the low-pressure end, which occurs at low loads when the volume flow becomes too small to maintain adequate steam velocity. The exhaust loss is determined from an appropriate curve, showing this loss as a function of volumetric flow or exhaust steam velocity at the exit annulus of the last rotating row.

5-9.3

By subtracting the exhaust loss from the calculated enthalpy of the turbine exhaust steam, an enthalpy known as the expansion line end point (ELEP) can be determined. When plotted on a Mollier diagram at the measured exhaust pressure, it is the terminal point of the test expansion line. If the difference between the previously estimated and newly calculated value exceeds the desired limit (usually 0.1 Btu/lbm), the following procedures should be followed:

(a) For Turbines Using Superheated Steam. When a previously estimated enthalpy for an extraction point in the wet region does not coincide with this expansion line, a revised value is read from the curve. New values for the extraction flow and expansion line end point are then calculated. This is repeated until the extraction enthalpy is consistent with the calculated expansion line end point.

Copyright ASME International
Provided by IHS under license with ASME
No reproduction or networking permitted without license from IHS
Not for Resale

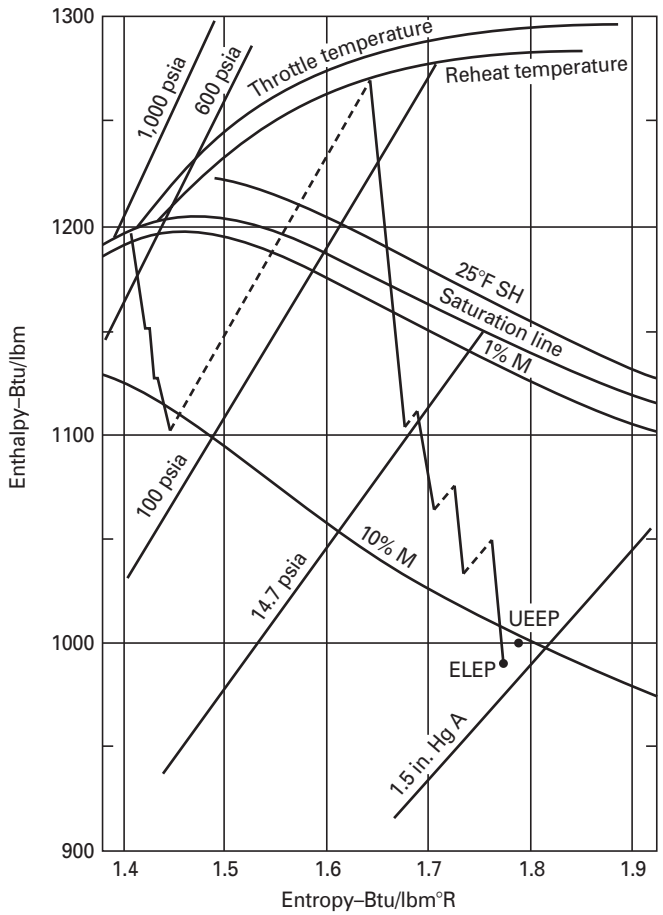

Fig. 5-1 Typical Saturated Steam Turbine Expansion Line

(b) For Turbines Using Wet Steam. Figure 5-1 shows a typical saturated steam turbine expansion line. The high-pressure turbine expansion line is on the left; the low-pressure turbine expansion line is on the right. The dotted line connecting them represents the moisture separator reheater. The discontinuities near the middle of the high-pressure turbine expansion line and near the lower end of the low-pressure turbine expansion line each represent a moisture content reduction due to free water removal at heater extraction points. No water removal is shown at pressures below the lowest pressure extraction point, since the necessary measurements usually are not made. Hence, the calculated turbine end point ignores the water removal below the lowest pressure heater.

The following procedures are used when plotting the state points to determine the expansion line for a test load.

(1) Plot the throttle steam state point from a measured throttle pressure and temperature or calculated moisture.

(2) Plot the calculated high-pressure turbine exhaust enthalpy at its exhaust pressure.

(3) Plot the hot reheat state point and extraction points in the superheated region (superheated at least 27°F, 15K) from measured pressures and temperatures.

(4) Plot the calculated low-pressure turbine end point (UEEP) and expansion line end point (ELEP) at the exhaust pressure.

(5) Plot the calculated extraction enthalpy at the measured extraction pressure for any additional extraction points other than noted in (6) below.

(6) The methods for determining the highest pressure extraction and lowest pressure extraction state points are the same and involve an iterative procedure. Calculate the steam enthalpy at the inlet to the group of turbine stages following the extraction point under consideration, using an assumed turbine efficiency. Energy is balanced using the previously calculated flows and extraction enthalpy and assumed inlet enthalpy to determine extraction state points. The difference between the assumed and calculated enthalpy is the result of free water removal and provides the data for determining water removal effectiveness. Finally, the expansion line slope above the extraction point must also be reasonable. If not, a different enthalpy is assumed and the calculation repeated. For the best solution, the most rea-

Copyright ASME International
Provided by IHS under license with ASME
No reproduction or networking permitted without license from IHS
Not for Resale

sonable expansion is obtained both above and below the extraction state points. In judging expansion line "reasonableness", one should refer to the design expansion lines at, or as close as possible to, the evaluated load. A close match between the expansion line slope above the extraction point at the expense of a poor match below that point, or vice versa, should be avoided.

5-10 TURBINE EFFICIENCY AND EFFECTIVENESS

5-10.1

Calculating exhaust steam enthalpy permits the determination of low-pressure turbine efficiency. This efficiency may be plotted versus exhaust volumetric flow or annulus velocity, and used for the same purposes as are efficiencies obtained from turbine sections operating entirely in the superheated region [see para. 5-2(b)]. One exception is covered in the next paragraph.

5-10.2

For low-pressure turbines with moisture removal stages, section efficiency as defined in para. 5-2.1(b) is not an appropriate performance indicator. With the internal efficiency definition, more effective water removal reduces calculated efficiency, which is contradictory. Performance of such turbine sections is therefore better measured in terms of effectiveness, ϵ where

$$\epsilon = \frac{\Delta h}{\Delta h + T_o \Delta s}$$

where

Δh = Sum of the actual work (in Btu/lbm) of the individual expansions in the low-pressure steam path

Δs = Sum of the entropy changes (in Btu/lbm°R) corresponding to the Δh expansions used above

ΔT_o = Absolute temperature (°R) corresponding to the low-pressure section exhaust pressure

The components of the definition of effectiveness are illustrated in Fig. 5-2. Effectiveness may be plotted versus exhaust volumetric flow or annulus velocity, in a manner similar to efficiency, as described in para. 5-2(b).

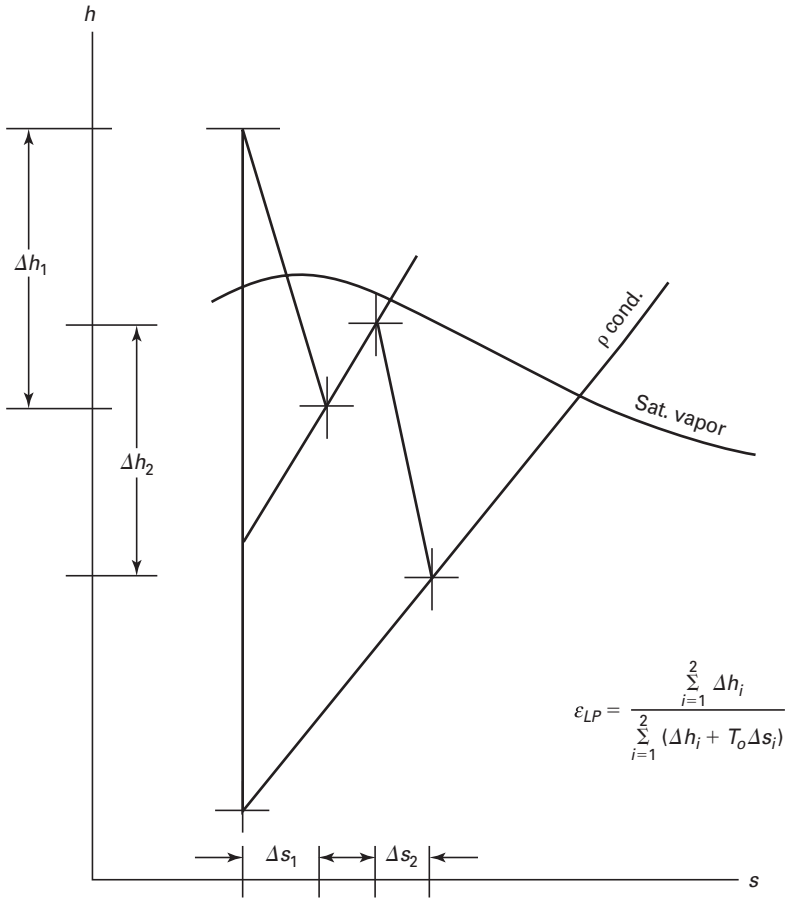

Fig. 5-2 Components of Effectiveness

Copyright ASME International
Provided by IHS under license with ASME
No reproduction or networking permitted without license from IHS
Not for Resale

5-11 CALCULATION OF GROUP 1 CORRECTIONS

5-11.1

The specified cycle performance can now be calculated using the test expansion line (test turbine efficiencies), specified cycle conditions, test packing leakages, and test throttle flow. First, specified cycle extraction flows must be calculated for the following conditions:

(a) a feedwater flow leaving the highest pressure heater, equal to the test throttle flow, plus or minus any pertinent flows specified in the contract.

(b) no variation in the amount of water stored in the condenser hotwell, deaerator, or other cycle vessel.

(c) steam pressure in each feedwater heater lower than the pressure measured at the turbine extraction flange by the specified percentage of extraction line pressure drop.

(d) temperature of the feedwater leaving each heater differing from the saturation temperature corresponding to the heater steam pressure by the specified terminal temperature difference.

(e) condensate drained from heaters at the saturation temperature corresponding to the heater steam pressure unless a drain cooler section is included in the heater. If a drain cooler section is included, the condensate drain temperature equals the heater inlet temperature plus the drain cooler section specified drain cooler approach difference.

(f) feedwater temperature entering the lowest pressure heater equal to the saturation temperature corresponding to the turbine exhaust pressure, less the specified amount of subcooling, plus any temperature rise due to heat added to the condensate in accordance with the specified cycle.

(g) no flows entering or leaving the cycle except those included in the specified cycle.

(h) enthalpy rise across the condensate and feedwater pumps as specified.

For turbines using wet steam, the moisture removal effectiveness as determined in para. 5-10.2 shall be used in the calculation of the specified cycle extraction flows.

5-11.2

Since turbine stage pressures vary directly with flow to the following stage, changes in extraction flow and use of reheat sprays may change these pressures, with corresponding changes in heater pressures and outlet-water temperatures. Enthalpy of the extraction steam also varies with the pressure at the extraction stage and is determined from the test expansion line. These changes may necessitate an iterative calculation of the corrected steam flows until the extraction pressures check within 1% or 1 psi (6.9 kPa), whichever is smaller. The exhaust flow with the revised extraction quantities is then determined and the corresponding exhaust loss read from the appropriate curve. Exhaust steam enthalpy WEEP) is calculated by adding the revised exhaust loss to the original expansion line end point (ELEP), which is not affected by variations in exhaust flow.

5-11.3

For reheat turbines, changes in desuperheating water and high-pressure extraction steam flows may cause an appreciable change in reheat turbine inlet flow, producing a new pressure at the reheat stop valve. If so, one of the following methods should be used to obtain the revised reheat inlet enthalpy:

(a) Revised values of reheat temperature and enthalpy can be read from an extrapolation or interpolation of the test expansion line at the new reheat stop valve pressure.

(b) A revised reheat enthalpy can be read from an expansion line developed from test turbine efficiency at the new reheat stop valve pressure and test reheat temperature. In this case, the enthalpy of the exhaust steam is calculated by adding the revised exhaust loss to a revised ELEP determined from the new reheat stop valve pressure, test reheat temperature, test exhaust pressure, and test turbine efficiency, instead of as described in the last sentence of para. 5-11.2. The revised steam enthalpies must then be used when calculating generator output for operation with the specified cycle conditions.

5-11.4

The corresponding generator output can be calculated by means of a turbine energy balance similar to that previously used to calculate turbine exhaust steam enthalpy. The generator losses in this balance must be determined for operation with the specified values of power factor, voltage, speed, and hydrogen pressure. These losses must be consistent with those used in determining the turbine exhaust steam enthalpy described in para 5-9.1. Turbine heat input for the revised final feedwater temperature and reheat steam flow are now calculated. If packing leakage steam is supplied from a separate source, or if it leaves the cycle, the method of charging or crediting the turbine for this flow must be consistent with the specified performance. With these turbine input and generator output values, a turbine heat rate, corrected to the specified feedwater cycle and generator operating conditions, can be calculated.

5-12 CALCULATION OF GROUP 2 CORRECTIONS

5-12.1

Correction factors must be obtained by calculation or test to correct heat rate and output for deviations from the specific values of throttle pressure, temperature or quality, hot reheat temperature(s), reheater pressure drop(s), exhaust pressure, and speed. If the application

Copyright ASME International
Provided by IHS under license with ASME
No reproduction or networking permitted without license from IHS Not for Resale

of Group 1 corrections causes a change in the reheat-stop-valve pressure(s), the correction factors of reheat temperature(s) and reheater pressure drop(s) must correspond to the revised values, not to the test values (see para. 5-11.3). The revised reheater pressure drop is the difference between the test high-pressure turbine exhaust pressure and the revised reheat stop valve pressure.

5-12.2

In an alternative approach, intermediate pressure turbine test inlet pressure and design reheater pressure drop are used to calculate high-pressure turbine exhaust pressure. High-pressure turbine test efficiency is then used to calculate its exhaust enthalpy. This approach may be most appropriate for cycles with high-pressure turbine exhaust steam-powered feedwater pumps, permitting the available energy to the feedwater pump turbines to approach design values. These factors must be applied to the values of heat rate and output previously calculated for operation with the specified cycle, to determine turbine performance with all operating conditions at specified values. These heat rates and outputs are then compared with specified performance.

5-12.3

The corresponding steam flow is corrected to the specified throttle pressure and specific volume by the equation in para. 5-4.2.

5-13 AVERAGE PERFORMANCE

5-13.1

The specified performance, and results of tests for a series of loads, may be expressed as a single value based on weighted steam or heat consumptions or turbine efficiencies. For example:

1	2	3	4
Percentage of Rated Output (Example)	Steam or Heat Consumption lbm (kg) or Btu/kWhr (kJ/kWh) or Turbine Efficiency	Weight Factor (Example)	Product of columns (2) and (3)
100		5	
80		4	
60		3	
40		2	
		Sum = 14	Sum

$$\text{Weighted average} = \frac{\text{Sum of Column 4}}{\text{Sum of Column 3}}$$

5-13.2

If average performance is calculated in accordance with para. 5-13.1, the percentages of rated output and their respective weight factors should reflect the load duration curve of expected turbine operation. If not specified, they should be agreed upon before proceeding with the tests.

--`,,```,,,,````-`-`,,`,,`,`,,`---
Copyright ASME International
Provided by IHS under license with ASME
No reproduction or networking permitted without license from IHS
Not for Resale

Section 6
Report of Tests

6-1 TURBINE GENERATOR ACCEPTANCE TEST REPORTS

Those test reports should include the relevant items in the following list:

(a) Brief summary of test
(1) owner
(2) designation of the unit
(3) name and location of the plant
(4) date of commercial operation
(5) object of test
(6) date of test
(7) brief report of test results and conclusions, including post-test uncertainty analysis if performed
(8) brief history of unit operation since start-up
(9) pretest agreements
(b) Manufacturer's guarantee heat balance diagram(s)
(c) Cycle diagram showing test readings (after application of instrument corrections and averaging)
(d) Discussion of test
(1) methods of flow measurements
(2) turbine heat or steam rate
(3) turbine stage pressures
(4) efficiencies of turbine sections
(5) overall turbine efficiency (extraction and mixed-pressure turbines)
(6) gland leakage flows
(7) feedwater heater performance
(8) MSR performance
(9) generator output measurements
(10) special tests to determine correction factors
(11) test procedure
(12) any other pertinent information
(e) Tabulation of turbine performance corrected to the following specified operating conditions
(1) throttle steam flow
(2) generator output
(3) heat or steam rate
(4) overall turbine efficiency (extraction and mixed-pressure turbines)
(5) specified heat or steam rate
(6) specified overall turbine efficiency
(7) deviation from specified performance
(8) any other pertinent data
(f) Graphical presentation (all values corrected to the following specified operation conditions)
(1) heat rate versus output
(2) steam rate versus output
(3) stage pressures versus throttle steam flow
(4) stage pressures versus steam flow to following stage
(5) efficiency of turbine sections:
(a) high-pressure turbine efficiency versus first stage pressure ratio or throttle steam flow
(b) intermediate pressure turbine versus flow to the intermediate pressure turbine
(c) low-pressure turbine efficiency or effectiveness versus exhaust annulus velocity volumetric flow
(6) gland leak-off flows versus throttle steam flow
(7) correction factors, if determined by test
(8) flow diagram showing location of flowmeters, details of gland-sealing system, and other pertinent details
(g) Summary of generator conditions for all tests
(h) Tabulation of specified test boundary conditions
(i) Set of all curves used to correct output, steam rate, or heat rate
(j) Sample calculation for one of the test runs
(k) Discussion of results

Copyright ASME International
Provided by IHS under license with ASME
No reproduction or networking permitted without license from IHS
Not for Resale

Section 7
Required Number of Readings

7-1 INTRODUCTION

Figure 3-1 of this Code presents a means for estimating the number of readings of a specific type required for a turbine performance test. That figure is supplemented by paras. 3-9.1 through 3-9.4 and Table 3-2 and intended to be especially useful when the testing of a specific turbine performance test point has been partially completed. It uses the number of readings that are then available and their maximum and minimum values. From these, this method furnishes an estimate of how many readings are required in order not to exceed the 20.05% specified uncertainty in the result of the test as caused by the effect of scatter in the readings. This does not take into account the effect of spatial variations or fixed instrument errors, which are covered elsewhere in this Code. This Section contains illustrations for the use of Fig. 3-1 and Table 3-2 and the method used to develop Fig. 3-1.

Calculating the approximate allowable ranges (maximum instrument readings minus minimum instrument readings) of important readings before the test is run is recommended. This will enable the test supervisor to quickly compare these approximate ranges with the recorded ranges during the test, thus aiding in judging whether a valid test is being run or if improvements are needed in the instrumentation or control of test conditions.

During running of some tests, a gradual change in the level of some measurements with respect to time may be experienced. This may be in the form of a linear rise or decay or may possibly approach a sine wave. The slow changes could possibly be caused by such things as unusual changes in weather conditions, ambient temperature sensitivity of controllers, gradual fouling of gas side of boiler tubes during the test, and numerous others. These gradual changes generally do not influence the uncertainty of a test if they are well within the permitted deviations from design or rated condition permitted by para. 3-8.11. The range in instrument readings as determined from the maximum and minimum instrument readings takes into consideration the gradual changes as well as the superimposed more rapid fluctuations. Unless the less harmful gradual changes are factored out of the range, this could cause Fig. 3-1 to indicate a considerably larger number of readings required than are actually necessary. If, during a test run, some measurements indicate gradual changes as well as rapid fluctuations, the apparent effect from the gradual changes may be reduced by breaking down the sample of available readings into a number of smaller samples of a common size. The allowable range as calculated before test can now be compared with the ranges being observed in each of the smaller sample sizes to determine if the rapid fluctuations are within limits. This is particularly applicable to flow measurements by flow-nozzle differential pressures, and power by indicating wattmeter, where the number of readings available is larger than for other types of data because of the one minute reading frequency.

7-2 ILLUSTRATIONS

The illustrations presented in this Section represent heat rate tests on a nonreheat turbine described as follows:

Steam conditions of 850 psig, 900°F, 1.5 in. Hg abs., 141,590 Ibm per hr throttle flow, 16,500 kW generator output at 0.85 power factor, and 351.8°F final feedwater temperature, with a specified heat rate of

$$\mathrm{HR} = \frac{141{,}590(1453.1 - 325.0)}{16{,}500}$$
$$= 9{,}680 \text{ Btu/kWhr } (10{,}213 \text{ kj/kWh})$$

7-3 EFFECT OF FLOW NOZZLE DIFFERENTIALS

Prior to the test, it is established that the tests are to be run with one throat-tap nozzle with two digital instruments measuring the differential pressure in 2 sets of throat taps. As recommended by the Code, 2 hr of readings at one minute intervals are to be recorded. The expected differential pressure for the test point under consideration has been calculated to be 8.3 psi (57.2 kPa).

For the test supervisor's guidance, the allowable range in differential-pressure readings for the test point is calculated as follows:

(a) For the 121 one minute interval readings on each instrument, enter Fig. 3-1, ordinate at 121, and read 1.4% for $\overline{Z}$ at the intersection of the $N_R = N_a$ curve.

(b) Two differential-pressure instruments are used. Therefore, $\overline{Z}_i$ for each instrument, with $\overline{Z}_n = 1.4$, is calculated by assuming that $\overline{Z}_1 = \overline{Z}_2 = \ldots \overline{Z}_n$ and rear-

Copyright ASME International
Provided by IHS under license with ASME
No reproduction or networking permitted without license from IHS
Not for Resale

ranging the equation found in Table 3-2 in the form $\overline{Z}_i = \overline{Z}_n\sqrt{n}$

$$\overline{Z}_i = 1.4\sqrt{2} = \pm 1.98\%$$

(c) Table 3-2 shows $\theta_1 = 0.5$ for flow by flow nozzle differentials. Now the maximum allowable range for differential pressure readings can be calculated by solving for $I_{max.} = J_{min.}$ in the equation

$$Z = \frac{100\ \theta_1(I_{max.} - I_{min.})}{0.5\ (I_{max.} + I_{min.})}$$

and using the expected 8.3 psi value in place of the approximate mean average 0.5 $(I_{max.} + I_{min.})$.

$$I_{max.} - I_{min.} = \frac{8.3 \times 1.98}{100 \times 0.5} = 0.33 \text{ psi } (2.3 \text{ kPa})$$

This is the allowable range in readings for each of the two differential-pressure instruments.

If, during running of the test point for the first one-half hour's 31 readings, one instrument indicates maximum and minimum readings of 8.25 psi (56.9 kPa) and 8.10 psi (55.8 kPa) and the second 8.45 psi (58.3 kPa) and 8.25 psi (56.9 kPa), the $I_{max.} - I_{min.}$ are 0.15 psi and 0.20 psi, respectively, and are well within the 0.33 psi (2.3 kPa) allowable range. With the 31 readings and their scatter available, it is now possible to determine how many readings on each of the instruments are required to stay within the 0.05% effect on the results due to the scatter in this data. This is done by determining N_R on Fig. 3-1 after calculating Z for each instrument and combining the two values by the formula in Table 3-2 as follows:

$$\overline{Z}_1 = \frac{100 \times 0.5(8.25 - 8.10)}{0.5(8.25 + 8.10)} = 0.92\%$$

$$\overline{Z}_2 = \frac{100 \times 0.5(8.45 - 8.25)}{0.5(8.45 + 8.25)} = 1.20\%$$

Combining $\overline{Z}_1$ and $\overline{Z}_2$ to arrive at $\overline{Z}$ for entry into Fig. 3-1 yields:

$$\overline{Z}_n = \frac{\sqrt{0.92^2 + 1.20^2}}{2} = \pm 0.76\%$$

Entering Fig. 3-1 with $\overline{Z} = 0.76$ and $N_a = 31$, read N_R as approximately 55. This is an estimate of the minimum number of readings of flow required to be within the 0.05% effect on the test results.

7-4 EFFECT OF THROTTLE STEAM TEMPERATURE

For throttle steam temperature, the slope of the manufacturer's correction curve and the slope of the steam tables enthalpy curves at constant pressure are required to calculate θ_2, defined in Table 3-2. Using the example in para 7-2 and its heat rate correction curve, Fig. 7-7, θ_2', which is the slope of the manufacturer's correction curve, becomes +0.03% per °F when the curve is used to correct from the test temperature to the design temperature. Errors due to scatter in the throttle steam temperature data will also affect the heat rate by causing errors in the throttle steam enthalpy used in the heat rate formula. The magnitude of this error (θ_2''), on a percent per °F basis, can be determined by using Fig. 7-3 and the enthalpy rise in the heat rate formula as follows:

(a) For the example, the slope of the superheated steam enthalpy curve at constant pressure is +0.565 Btu per lbm/°F as read from Fig. 7-3 at 900°F and 865 psia.

(b) With an enthalpy rise from 325.0 Btu/lbm to 1453.1 Btu/lbm as shown in the heat rate formula for the example, θ_2'' is calculated as follows:

$$\theta_2'' = \frac{+0.565 \times 100}{(1453.1 - 325.0)} = +0.05\% \text{ per °F}$$

θ_2' and θ_2'' are next added algebraically to arrive at θ_2. $\theta_2 = +0.03 + 0.05 = 0.08\%$ per °F.

Prior to the test, plans are made to use two thermocouples to measure throttle steam temperature. The maximum allowable range in temperature for a two-hour test with temperatures recorded at five-minute intervals can be established as follows:

(1) For $N_R = 25$ readings, $\overline{Z}$ from Fig. 3-1 is 0.49 at the intersection of the $N_a = N_R$ curve.

(2) For two thermocouples $\overline{Z}_i = 0.49\sqrt{2} = \pm 0.69\%$.

(3) $(I_{max.} - I_{min.}) = \dfrac{\overline{Z}_i}{\theta_2} = \dfrac{0.69}{0.08} = 8.6\text{°F } (4.8K)$

in temperature during a 2 hr test.

During actual running of the first $^1/_2$ hr of the test point, one thermocouple maximum and minimum readings correspond to 905°F and 900°F, respectively, and the second thermocouple correspond to 903°F and 899°F. Z values for each thermocouple are:

$$\overline{Z}_1 = 0.08(905 - 900) = 0.40\%$$

$$\overline{Z}_2 = 0.08(903 - 899) = 0.32\%$$

The combined

$$\overline{Z}_n = \frac{\sqrt{(0.40^2 + 0.32^2)}}{2} = \pm 0.256\%$$

With seven readings available after 30 minutes of running and $\overline{Z} = \pm 0.256$, N_R, the minimum number of readings required as indicated on Fig. 3-1 is about 15.

Figures 7-6 and 7-8 are included in this Code to illustrate the slope θ_2' for typical manufacturer's throttle pressure and exhaust pressure correction curves. Figures 7-2 through 7-5 were derived from the ASME Steam Tables and may be used to calculate θ_2'' for steam pressure and temperature and feedwater temperature. Figures 7-2 through 7-8 are produced in this Code from "Guidance for Evaluation of Measurement Uncertainty in Performance Testing of Steam Turbines" PTC 6 Report, and further reference can be made to that publication.

Copyright ASME International
Provided by IHS under license with ASME
No reproduction or networking permitted without license from IHS
Not for Resale

7-5 COMBINING READINGS FROM MORE THAN ONE SENSOR OR INSTRUMENT

Table 3-2 in this Code presents a method for combining the range of maximum-minus-minimum readings from different types of data having the same time interval between readings. An example of this would be a test that yields a combined $\overline{Z}_n$ of ±0.15% for seven readings on each of the initial pressure instruments and a combined $\overline{Z}_n$ of ±0.05% for seven readings on each exhaust pressure instrument. These can be combined with the ±0.26% for initial temperature using the equation under (b)(2) of Table 3-2.

$$\overline{Z}_n = \sqrt{[(0.26)^2 + (0.15)^2 + (0.05)^2]} = \pm 0.30\%$$

Reading Fig. 3-1 with $\overline{Z} = 0.30\%$ and $N_a = 7$ indicates about 20 as an estimate of N_R, the number of required readings.

7-6 ESTIMATED EFFECT OF ALL READINGS FOR THE ENTIRE TEST PERIOD

For at least some types of readings, most tests have far more readings during the period used to calculate the test result than N_R, the number of readings required for exactly the ±0.05% specified uncertainty of the effect on the result of the test. For this increased number of readings, the test uncertainty can be calculated as

$$U_t = 0.05\sqrt{\frac{N_R}{N_t}}$$

in which U_t = uncertainty based on the readings for the entire period used to calculate the test result. Subscripts R and t, respectively, refer to the number of readings required for the ±0.05% specified uncertainty and actual number used for calculating the test results.

The 121 readings of each flow-nozzle differential for a 2 hr test period reduce the uncertainty caused by scatter of flow-nozzle readings to

$$U_t = 0.05\sqrt{\frac{55}{121}} = \pm 0.034\%$$

Similarly, the 25 five minute readings of each instrument for temperature and pressure and exhaust pressure reduces their combined uncertainty to

$$U_t = 0.05\sqrt{\frac{20}{25}} = \pm 0.045\%$$

7-7 DEVELOPMENT OF FIG. 3-1

Paragraphs 7-8 through 7-13 contain the method used to develop Fig. 3-1.

7-8 STANDARD DEVIATION

The method is based on the fact that a large number of similar observations tend to cluster around their average value and that progressively fewer readings occur in increments of the same size as their distances from the average value increases. Such a distribution approaches a normally distributed population having a standard deviation σ. When a random sample is selected from a population, S is an adjusted root-mean-square value of the deviations of the individual values from their average ($\bar{x}$) and defined by the equation

$$S = \sqrt{\left[\frac{(x_i - \bar{x})^2}{(N - 1)}\right]} \qquad (7\text{-}1)$$

where

N = sample size

S = the standard deviation for the sample and represents the best estimate of σ for the population

7-9 DISCUSSION ON FIG. 7-1

Classical statistical methods show that any random sample of size N out of a normally distributed population of infinite size may show a range in observations (that is the maximum observation minus the minimum observation), which can possibly be equal to any value between zero and infinity but actually will be some intermediate value. The expected value of this range, which is defined as the average value of the range shown by a large number of samples of the same size, can be directly calculated.[1] The results of this calculation are tabulated in many books on statistics and plotted on Fig. 7-1 as S/Range for sample sizes from 2 to 200.

7-10 STANDARD DEVIATION OF THE AVERAGES

The scatter uncertainty of the result of any test is measured by S_a, the estimated standard deviation of the averages of the readings, not just of the individual readings. Classical statistics show that the standard deviation of the averages of random samples of values taken from a normally distributed population varies inversely as the square root of the number of values in the group. Thus,

$$S_a = \frac{S_i}{\sqrt{N - 1}} \qquad (7\text{-}2)$$

7-11 UNCERTAINTY LIMIT

In this Code, the standard deviation of the averages of the readings is used to estimate the required number

[1] See pages 288–291 of the 3rd Edition of "Introduction of Mathematical Statistics" by P. G. Hoe1 (1962) John Wiley and Sons, Inc., for example.

Copyright ASME International
Provided by IHS under license with ASME
No reproduction or networking permitted without license from IHS
Not for Resale

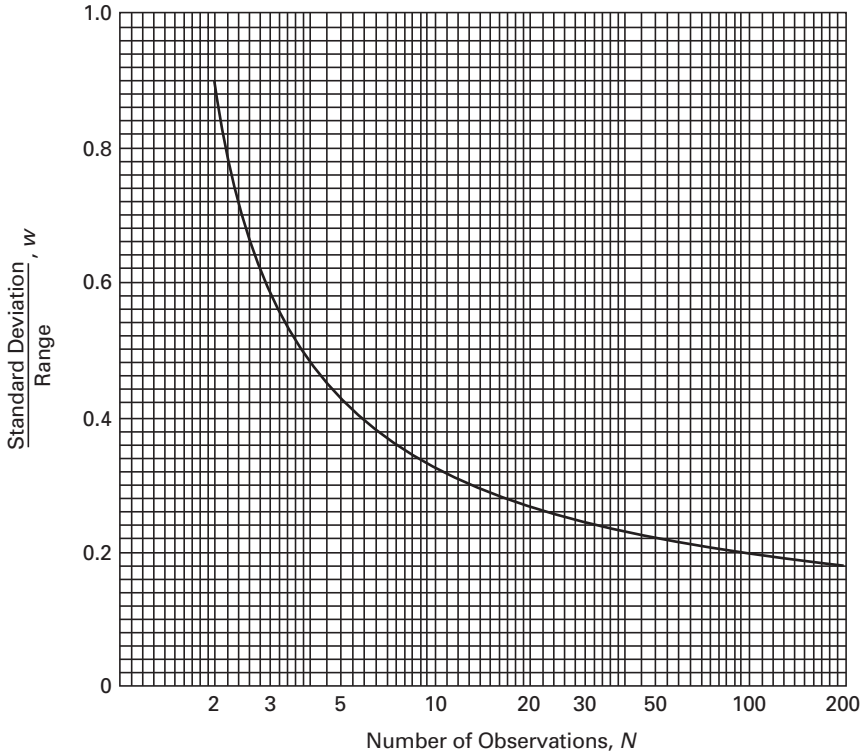

Fig. 7-1 Standard Deviation Range vs. Sample Size

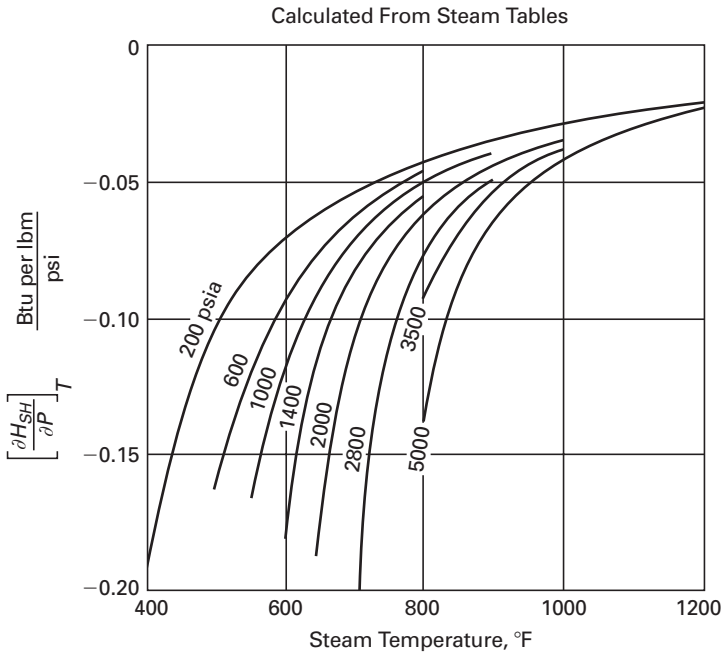

Fig. 7-2 Slope of Superheated Steam Enthalpy at Constant Temperature

Copyright ASME International
Provided by IHS under license with ASME
No reproduction or networking permitted without license from IHS
Not for Resale

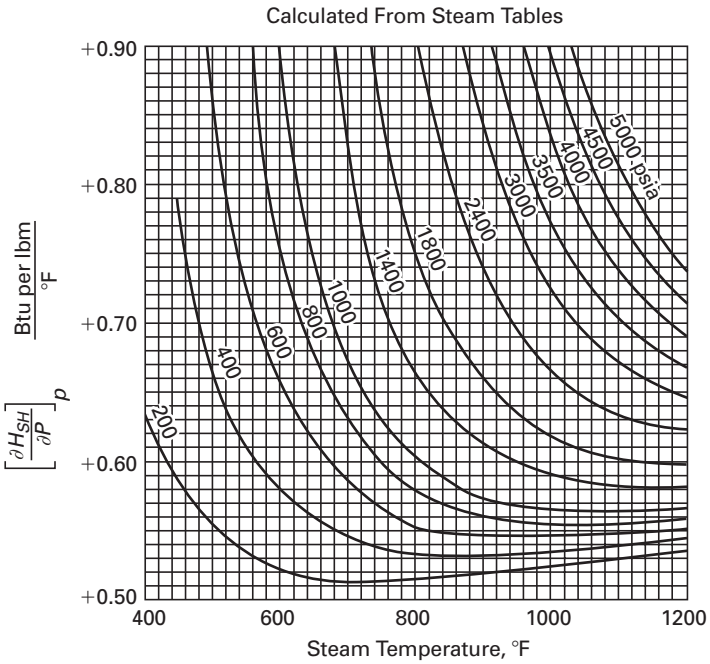

Fig. 7-3 Slope of Superheated Steam Enthalpy at Constant Pressure

of readings. The Code specifies that the effect on the test result from the scatter of any specific type of readings shall not cause an uncertainty of more than ±0.05%. That uncertainty is defined as

$$U_s = \left[\frac{100\ \theta_1(2S_a)}{\bar{x}}\right] = \theta_2(2S_a) \qquad (7\text{-}3)$$

In this equation, U_s is the specified uncertainty limit of ±0.05%, and $2S_a$ is twice the standard deviation of the averages.

The $2S_a$ means that for sample sizes above 30, the confidence level approaches 95%. That is, the uncertainty U_s will not be exceeded in more than one incident out of 20. For sample sizes fewer than 30, the confidence level will decrease, becoming approximately 90% for $N = 6$ and 86% for $N = 4$.

$\bar{x}$ is the average of readings of a particular type, θ_1 is the ratio of percent change in heat or steam rate to the percent change in readings and θ_2 is the percent change in heat or steam rate per unit of readings (such as per °F). Values of θ_1 and θ_2 are presented in Table 3-2 of this Code. These vary from ±1% effect on the test result for ±1% change in such data as power or flow to ±0.5% per percent of flow-nozzle dif-

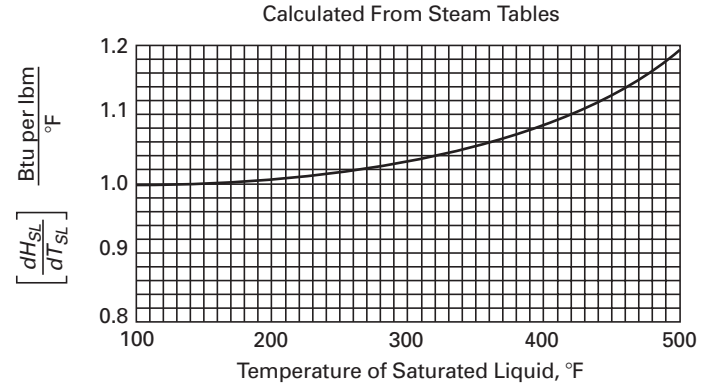

Fig. 7-4 Slope of Saturated Liquid Enthalpy (Temperature)

Copyright ASME International
Provided by IHS under license with ASME
No reproduction or networking permitted without license from IHS
Not for Resale

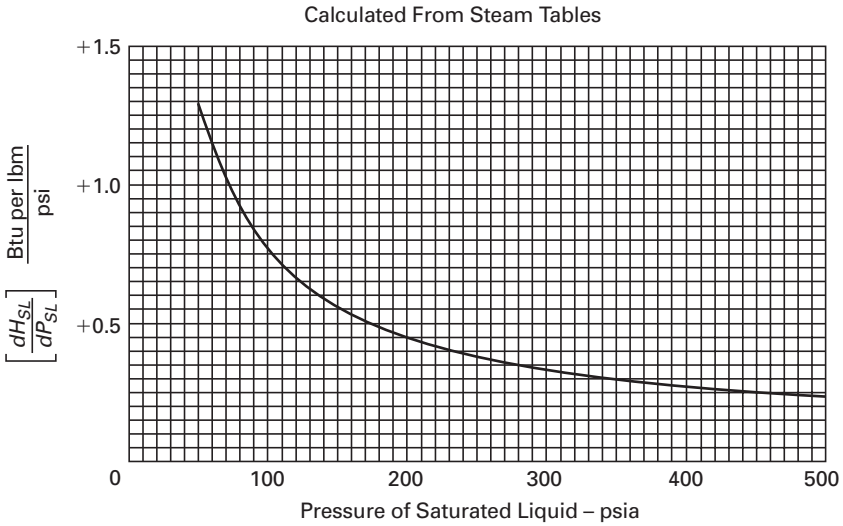

Fig. 7-5 Slope of Saturated Liquid Enthalpy (Pressure)

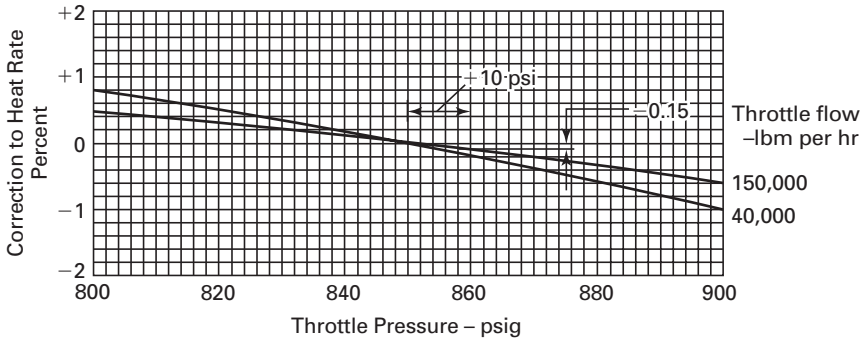

Fig. 7-6 Typical Throttle Pressure Correction Curve

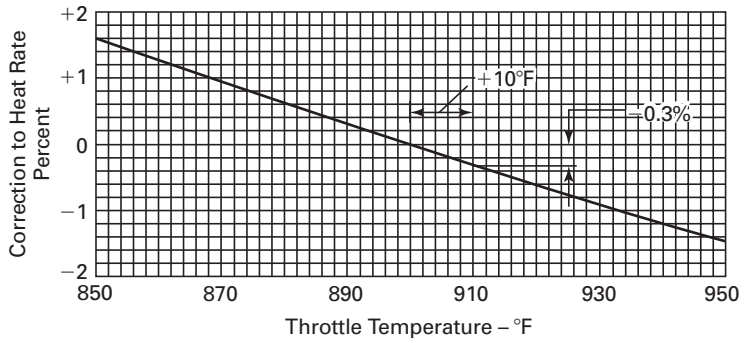

Fig. 7-7 Typical Throttle Temperature Correction Curve

Copyright ASME International
Provided by IHS under license with ASME
No reproduction or networking permitted without license from IHS
Not for Resale

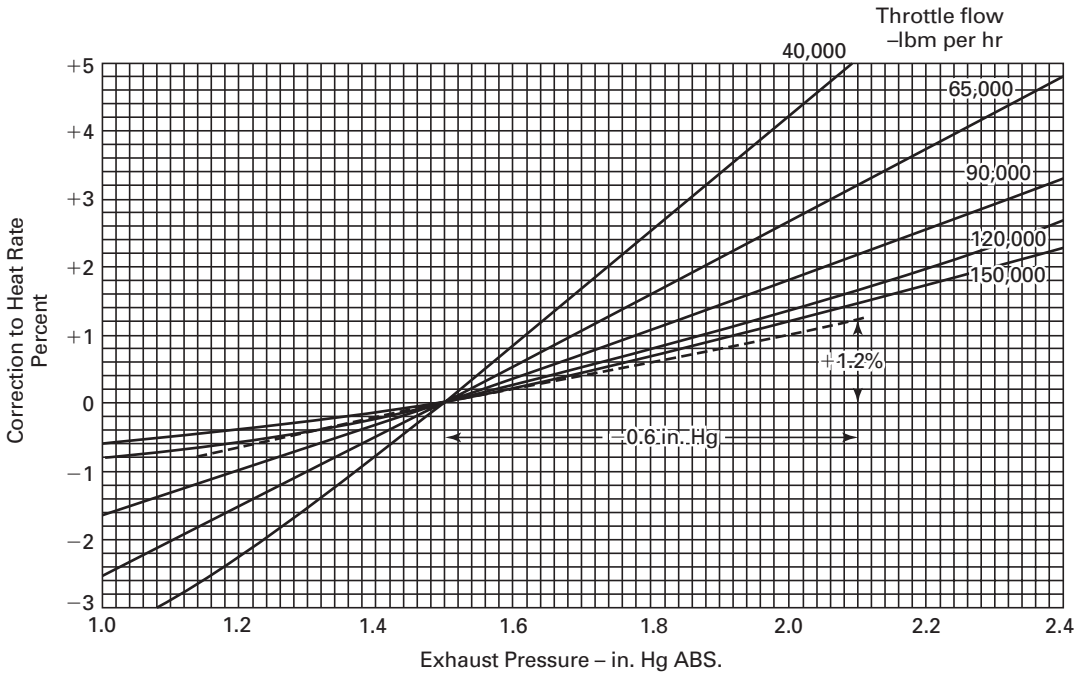

Fig. 7-8 Typical Exhaust Pressure Correction Curve

ferentials to about ±0.1% or less per °F for some temperatures.

7-12 FORMULA FOR $N_R = \bar{N}_a$ LINE IN FIG. 3-1

Defining the ordinate, S/Range on Fig. 7-1 as w and combining w with Eqs. (7-2) and (7-3), the maximum allowable range for the ±0.05% uncertainty becomes

$$\text{Range} = \frac{0.025(\sqrt{N})(\bar{x})}{100(\theta_1)(w)} = \frac{0.025(\sqrt{N})}{(\theta_2)(w)} \qquad (7\text{-}4)$$

For convenience, the abscissa on Fig. 3-1 is labeled as $\overline{Z}$, where

$$\overline{Z} = \frac{100(\theta_1)(\text{Range})}{\bar{x}}$$

or $= \theta_2$ (Range) both in percent.

With the Range being equal to ($I_{\text{max.}} - I_{\text{min.}}$) (the maximum minus the minimum instrument readings) and using one-half the maximum plus minimum reading to obtain an approximate average, $\overline{Z}$ becomes

$$\overline{Z} = \frac{100(\theta_1)(I_{\text{max.}} - I_{\text{min.}})}{0.5(I_{\text{max.}} + I_{\text{min.}})} \qquad (7\text{-}5)$$

or,

$$\overline{Z} = \theta_2(I_{\text{max.}} - I_{\text{min.}})$$

The method used to express the effect of the Range on the test results determines if the equation contains θ_1 or θ_2 (refer to the notes of Table 3-2). Rearranging Eq. (7-5) and substituting $\overline{Z}$ for

$$\frac{100(\theta_1)(\text{Range})}{\bar{x}} \text{ or } \theta_2 \text{ (Range)}, \overline{Z} \text{ becomes}$$

$$\overline{Z} = \frac{0.025(\sqrt{N})}{w} \qquad (7\text{-}6)$$

A curve of N versus Range can now be developed by using Eq. (7-6) after assuming N values and obtaining the corresponding w from Fig. 7-1. Such a curve is the line labeled $N_R = N_a$ on Fig. 3-1 of this Code. On that figure, N_a refers to the number of readings that are available when the figure is being used and whose maximum and minimum readings are the basis of the range in readings. N_R refers to the number of readings with the same standard deviation, which are required to correspond exactly to the ±0.05% specified uncertainty in the test results as caused by the range of those types of readings. The $N_R = N_a$ line is therefore a special case in which the number of readings available happens to equal the number of readings required for the range that exists in the readings.

An example of a point on the $N_R = N_a$ curve is: for $N = 50$, w from Fig. 7-1 = 0.222

$$\overline{Z} \text{ calculates to be } \frac{0.025(\sqrt{50})}{0.222} = \pm 0.796\%$$

Copyright ASME International
Provided by IHS under license with ASME
No reproduction or networking permitted without license from IHS
Not for Resale

7-13 DEVELOPMENT OF N_a LINES IN FIG. 3-1

Equation (7-6) can be written in the form

$$N_R = 1{,}600(\overline{Z}^2)(w^2) \tag{7-7}$$

By assuming values for N_a (number of readings available) and $\overline{Z}$ (which is a function of the range) and using w values from Fig. 7-1 corresponding to the assumed N_a value, N_R, the required number of readings for the $\pm 0.05\%$ uncertainty level, can be calculated. It should be noted in Eq. (7-7) that N_R is proportional to $\overline{Z}^2$ for specific values of w and N_a. This relationship, therefore, causes the N_a lines to be straight lines with a slope of 2.0 in the Fig. 3-1 log-log plot, and each line passes through the corresponding point in the curve labeled $N_R = N_a$.

As an example for a point on the $N_a = 20$ line: for $N_a = 20$, from Fig. 7-1, $w = 0.268$ and for $\overline{Z} = 0.2$, N_R calculates to $1{,}600\ (0.2)^2\ (0.268)^2 = 4.6$.

Copyright ASME International
Provided by IHS under license with ASME
No reproduction or networking permitted without license from IHS
Not for Resale

Section 8
Group 1 Corrections for the Alternative Procedure

8-1 CORRECTIONS TO SPECIFIED CONDITIONS

The alternative procedure does not require a contract cycle calculation to determine whether the turbine generator meets guarantee. The test heat rate and output are corrected to specified conditions using correction curves for both Groups 1 and 2 corrections. Group 2 corrections are applied as in the full-scale procedure.

8-2 CYCLE PARAMETERS

The alternative procedure provides insufficient data for corrections to be made for all cycle differences. Group 1 corrections are made by correction curves for only the most influential variables. The cycle parameters for which corrections are to be made should be selected to account for most of the cycle influence on heat rate. The remaining small amount, which is not corrected, contributes to the small increase in test uncertainty of the alternative procedure relative to the full-scale test.

8-3 CORRECTION FACTOR CURVES

The parties to the test should reach agreement, prior to the test, on which parameters should be measured and corrected and also on the specific correction curves to be used. The correction factor curves presented in Figs. 8-2 through 8-7 and 8-9 through 8-12 may be used unless there is significant cycle deviation from Figs. 8-1 or 8-8. Curves for the specific cycle should then be prepared using heat balances for the full range of variation expected during the test.

The typical correction factor curves shown in these paragraphs should be evaluated to determine how representative the curve results are for the cycle and test conditions encountered. The evaluation can be by one or both of two methods.

(a) Logic Examination. Such as the test unit size and cycle conditions are very near to the size and cycle conditions used to determine the curves.

(b) Cycle Evaluation. Such as calculation of some of the more significant corrections for comparison to the generic curves. Reliable calculations can be made with one of several steam cycle evaluation computer programs, which are used widely in steam cycle evaluation analysis.

8-4 SAMPLE GROUP 1 CORRECTION CURVES FOR FOSSIL UNITS

Some correction curves have been derived using heat balance calculations for a 320 MW unit with steam conditions of 2,400 psig, 1,000°F/1,000°F and 2.5 in. HgA exhaust pressure. The unit has seven feedwater heaters as shown in Fig. 8-1. These correction factor curves are typical for single reheat turbines and have been found to be applicable for size ranges up to about 600 MW.

8-4.1 Final Feedwater Temperature

Correction curves for both net heat rate and electrical output are presented on Fig. 8-2 as a function of percent of valves-wide-open (VWO) throttle flow. These curves should be used only to correct for differences between test and specified cycle top heater terminal temperature differences and differences in the pressure drop from the turbine to the top heater. The effect of throttle pressure on the correction is very small; therefore, the curves may also be used for 1,800 psig and 3,500 psig units.

8-4.2 Auxiliary Extraction

The effect of differences between the test and specified cycle auxiliary extraction flow, such as air preheating, can be derived for extractions downstream of the reheater using Fig. 8-3. The net heat rate and electrical output corrections are expressed in terms of percent per 1% difference in auxiliary flow. Auxiliary flow is expressed in percent of throttle flow and plotted versus the extraction pressure to generalize its application. If the auxiliary extraction is taken from the cold reheat, the corrections in Fig. 8-4 should be used.

A complication may arise if the cycle has a condensing auxiliary turbine driving the boiler feed pump and if there is a difference between test and specified exhaust pressures. It is common to include the effect of changing exhaust pressure on the auxiliary turbine flow requirement in the derivation of exhaust pressure correction curves for the main unit. If flow to the auxiliary unit is measured and corrected, there would be a double correction for the effect of exhaust pressure on the auxiliary turbine. To avoid this problem, it is recommended that main unit correction factor curves for exhaust pressure not include the effect on the auxiliary turbine.

Copyright ASME International
Provided by IHS under license with ASME
No reproduction or networking permitted without license from IHS
Not for Resale

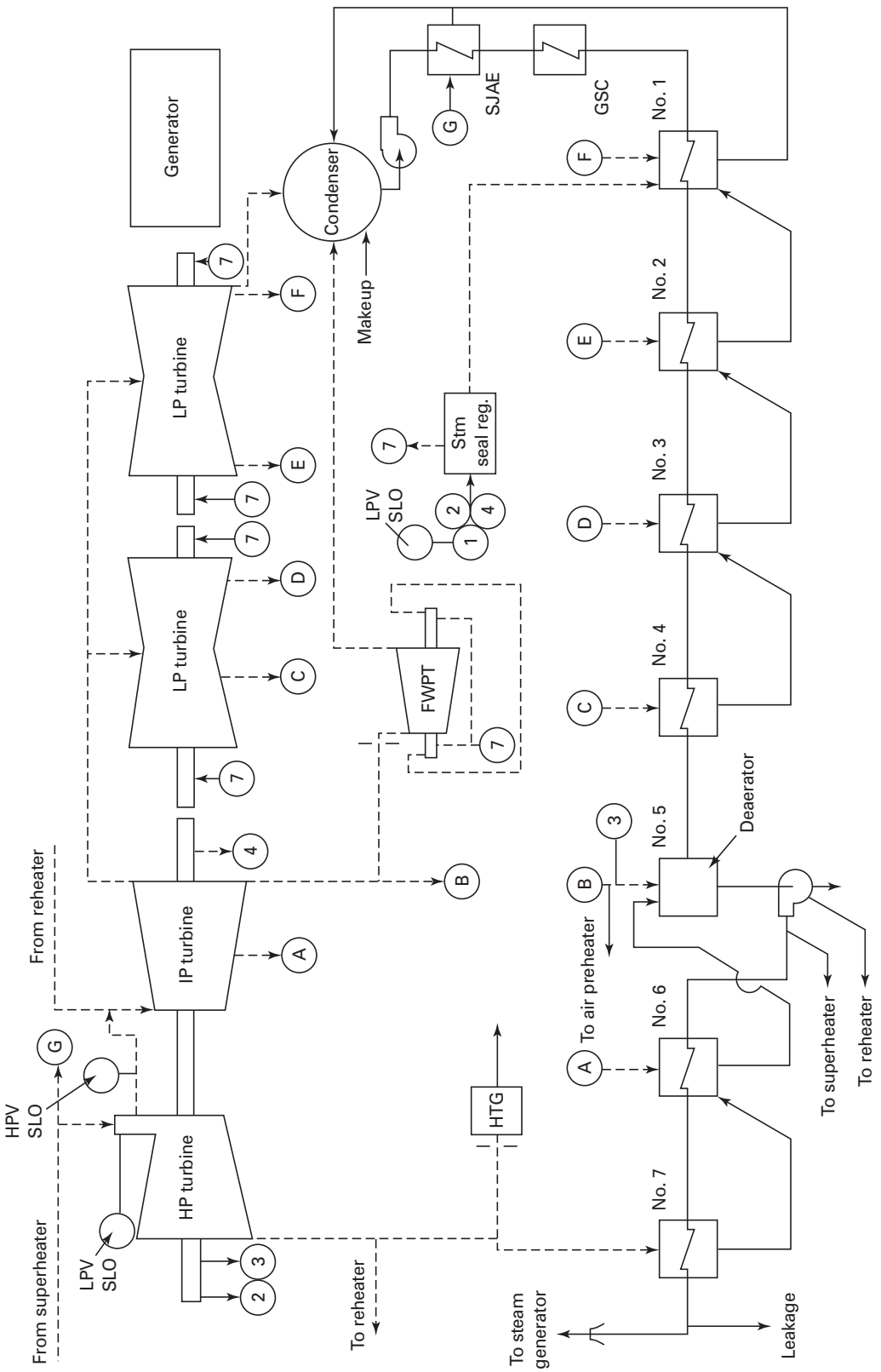

Fig. 8-1 Typical 320 MW Single-Stage Reheat Regenerative Cycle

Copyright ASME International
Provided by IHS under license with ASME
No reproduction or networking permitted without license from IHS
Not for Resale

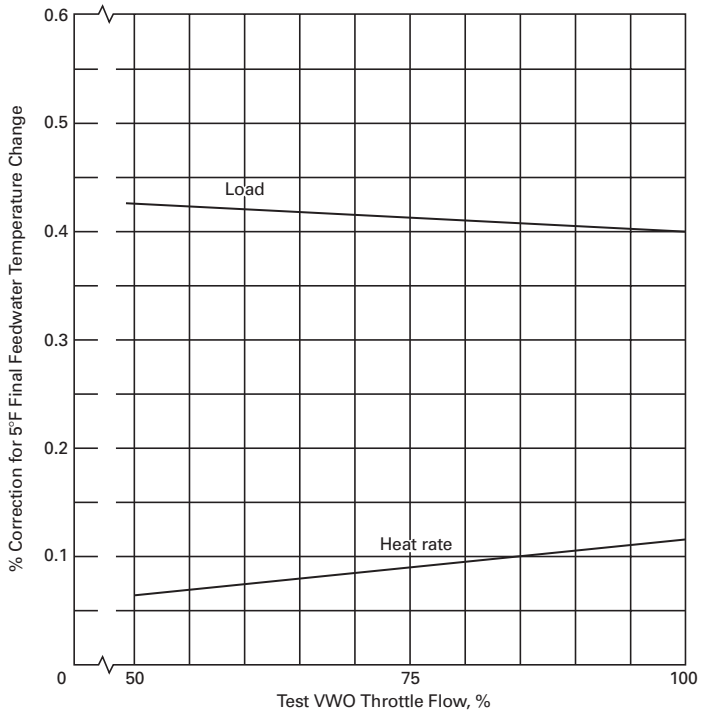

GENERAL NOTES:
(a) Due to top heater terminal temperature difference or extraction pipe pressure drop (different from specified heat balance).
(b) Apply curves at constant control valve opening.

Fig. 8-2 Final Feedwater Temperature Correction

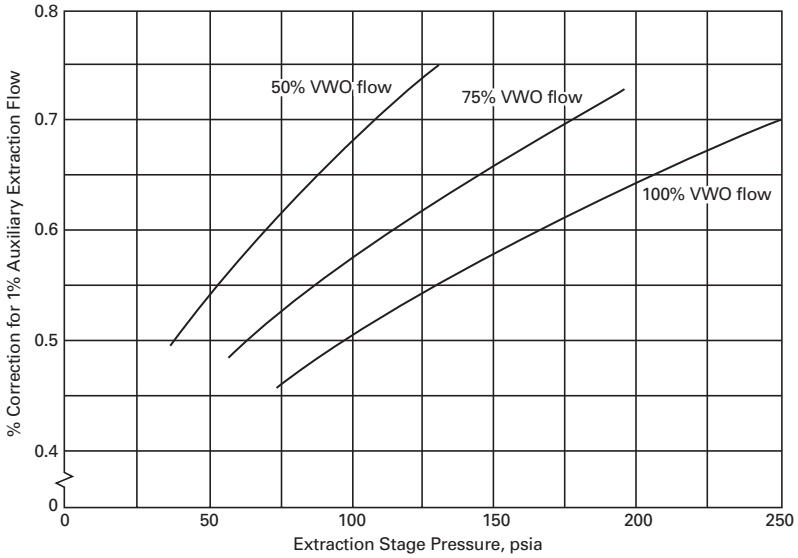

GENERAL NOTES:
(a) Auxiliary extraction returns to condenser. Percent auxiliary extraction is percent of throttle flow.
(b) The correction applies to both load and heat rate.

Fig. 8-3 Auxiliary Extraction Correction (Extraction Downstream of Reheater)

Copyright ASME International
Provided by IHS under license with ASME
No reproduction or networking permitted without license from IHS
Not for Resale

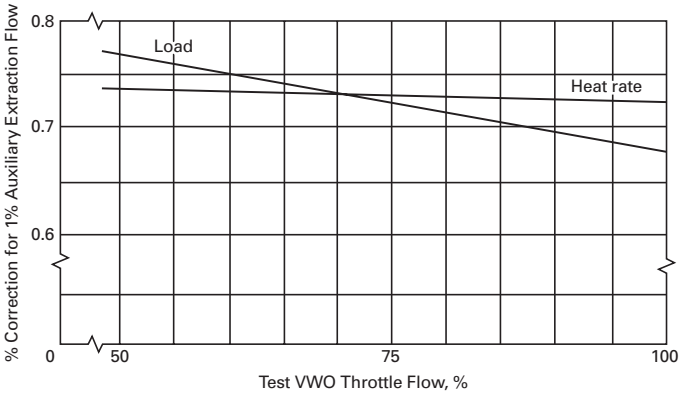

GENERAL NOTES:
(a) Auxiliary extraction returns to condenser.
(b) Percent auxiliary extraction is percent of throttle flow.

Fig. 8-4 Correction for Auxiliary Extraction From Cold Reheat

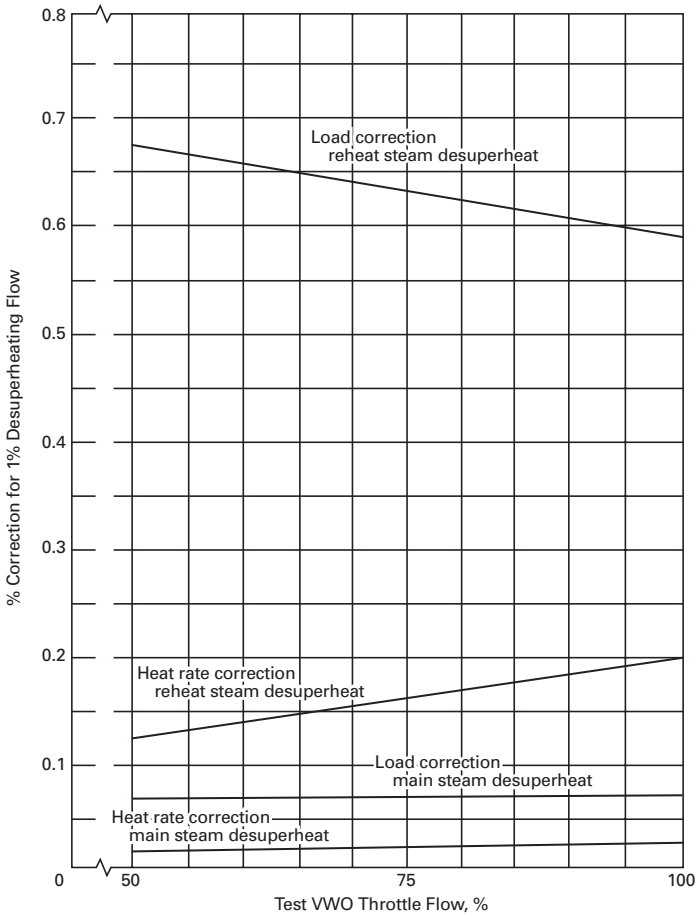

GENERAL NOTES:
(a) Percent desuperheating flow is percent of throttle flow.
(b) Desuperheating flow supply is from feedwater pump.
(c) Apply corrections at constant main steam and reheat temperature.

Fig. 8-5 Corrections for Main Steam and Reheat Steam Desuperheating Flow

Copyright ASME International
Provided by IHS under license with ASME
No reproduction or networking permitted without license from IHS
Not for Resale

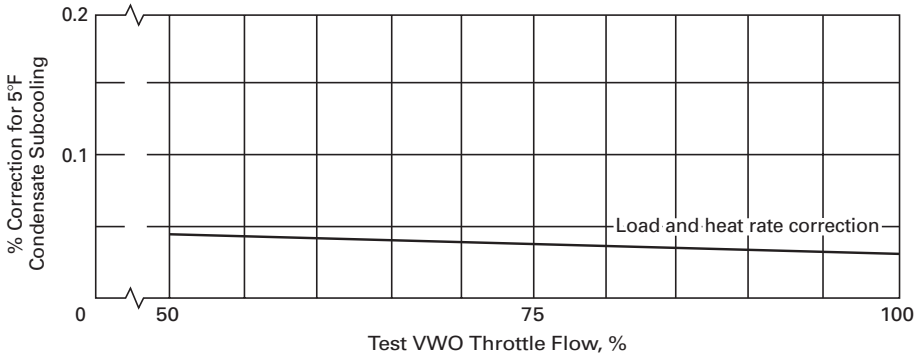

Fig. 8-6 Condensate Subcooling Correction

Alternatively, it would be necessary to assess how much of the difference in auxiliary turbine steam flow between test and specified is due to the change in exhaust pressure and correct for only the remainder. A convenient way to do this is to obtain a corrected auxiliary turbine extraction flow by multiplying the specified extraction flow by the ratio of available energy on the auxiliary turbine at specified conditions to the available energy at test conditions.

8-4.3 Desuperheating Flow

Correction curves for both net heat rate and electrical output are presented on Fig. 8-5 for both main steam and reheat steam desuperheating flow. The percent correction is expressed in terms of the difference in the desuperheating flow between test and specified cycle, as a percent of throttle flow. These corrections are plotted versus percent test VWO throttle flow.

8-4.4 Condensate Subcooling

The correction for condensate subcooling is shown in Fig. 8-6 as a function of percent of VWO throttle flow. This correction is based on the measurement of condensate temperature leaving the hotwell. Heat added to or rejected from the condensate between the hotwell and lowest pressure feedwater heater can be corrected using Fig. 8-6 by treating them as negative subcooling and subcooling, respectively.

8-4.5 Make-up

Tests should be conducted without make-up whenever possible. However, since many specified cycles include make-up, a correction is frequently required. This correction is shown in Fig. 8-7 assuming demineralized make-up into the condenser hotwell.

8-4.6

Table 8-1 gives the equations for the use of the curves for Group 1 corrections.

8-5 SAMPLE GROUP 1 CORRECTION CURVES FOR NUCLEAR UNITS

Some correction curves have also been derived for a typical nuclear unit using heat balance calculations. The unit has a six heater cycle shown in Fig. 8-8, initial steam

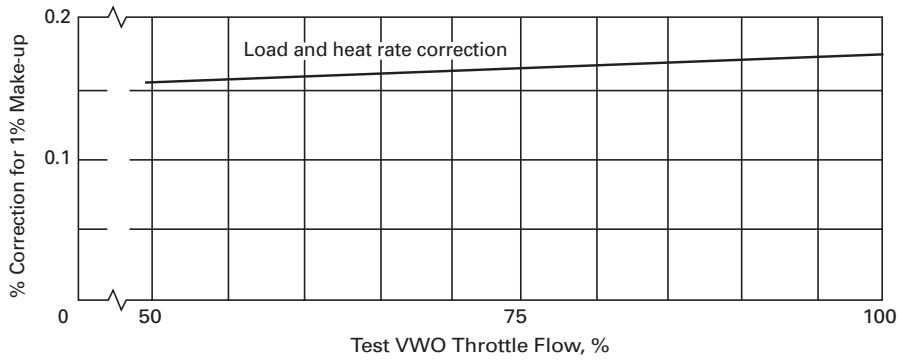

GENERAL NOTES:
(a) Leakage is from main part of steam generator.
(b) Percent make-up is percent of throttle flow.

Fig. 8-7 Condenser Make-up Correction

Copyright ASME International
Provided by IHS under license with ASME
No reproduction or networking permitted without license from IHS
Not for Resale

Table 8-1 Equations for Use in Curves for Group 1 Corrections

Terminal Difference Correction—See Figs. 8-2 and 8-9
Corrected *HR* = Test *HR*/*A*
Corrected Load = Test Load/*A*
where

$$A = 1 + \left[\frac{\%\ \text{Corr}}{100} \left(\frac{TD_{\text{test}} - TD_{\text{design}}}{5^{\circ}\text{F}} \right) \right]$$

Pressure-drop Correction—See Figs. 8-2 and 8-9
Corrected *HR* = Test *HR*/*B*
Corrected Load = Test Load/*B*
where

$$B = 1 + \left[\frac{\%\ \text{Corr.}}{100} \left(\frac{t_{\text{sat}}\ \text{at}\ (p_{tb\ \text{test}})\ (1 - \%\Delta p_{\text{design}}) - t_{\text{sat}}\ \text{at}\ (p_{\text{tb test}} - \Delta p_{\text{test}})}{5^{\circ}\text{F}} \right) \right]$$

t_{sat} = saturation temperature, °F
$p_{\text{tb test}}$ = extraction pressure at turbine during test, psia
Δp_{design} = design heat balance pressure drop in extraction pipe, psi
Δp_{test} = test pressure drop in extraction pipe, psi

Auxiliary Extraction Correction—See Figs. 8-3, 8-4, and 8-10
Corrected *HR* = Test *HR*/(1 + *C*)
Corrected Load = Test Load/(1 − *C*)
where

$$C = \frac{\%\ \text{Corr.}}{100}\ (\%\ \text{Aux. Extr.}_{\text{test}} - \%\ \text{Aux Extr.}_{\text{design}})$$

Desuperheating Flow Correction—See Fig. 8-5
Corrected *HR* = Test *HR*/*D*
Corrected Load = Test Load/*D*
where

$$D = 1 + \left(\frac{\%\ \text{Corr.}}{100} \times \%\ \text{Desuperheating flow} \right)$$

Condensate Subcooling Correction—See Figs. 8-6 and 8-11
Corrected *HR* = Test *HR*/(1 + *E*)
Corrected Load = Test Load/(1 − *E*)
where

$$E = \frac{\%\ \text{Corr.}}{100} \times \frac{^{\circ}\text{F Subcooling}}{5^{\circ}\ \text{F}}$$

Condenser Make-up Correction—See Figs. 8-7 and 8-12
Corrected *HR* = Test *HR*/(1 + *F*)
Corrected Load = Test Load/(1 − *F*)
where

$$F = \frac{\%\ \text{Corr.}}{100}\ (\%\ \text{Make-up}_{\text{test}} - \%\ \text{Make-up}_{\text{design}})$$

conditions of 965 psig, 1,191.5 Btu/lbm, a final feedwater temperature of 420°F and is rated at 1,000 MW. It is anticipated that correction curves for other nuclear units should be very similar.

8-5.1 Final Feedwater Temperature

Correction curves for both net heat rate and electrical output are presented on Fig. 8-9 as a function of percent of VWO throttle flow. Like Fig. 8-2, these curves should be used only for differences between test and specified cycle top heater terminal differences and pressure drop from the turbine.

8-5.2 Auxiliary Turbine Extraction

Figure 8-10 presents a correction curve for extraction to an auxiliary turbine following a moisture separator/reheater. Extraction flow is expressed as a percent of throttle flow. It is assumed that condensate from the auxiliary turbine is returned to the main unit condenser hotwell.

8-5.3 Condensate Subcooling and Make-up

Figures 8-11 and 8-12 present correction curves for condensate subcooling and make-up, respectively. The same comments apply as for the equivalent fossil correction curves (see paras. 8-4.4 and 8-4.5).

Copyright ASME International
Provided by IHS under license with ASME
No reproduction or networking permitted without license from IHS
Not for Resale

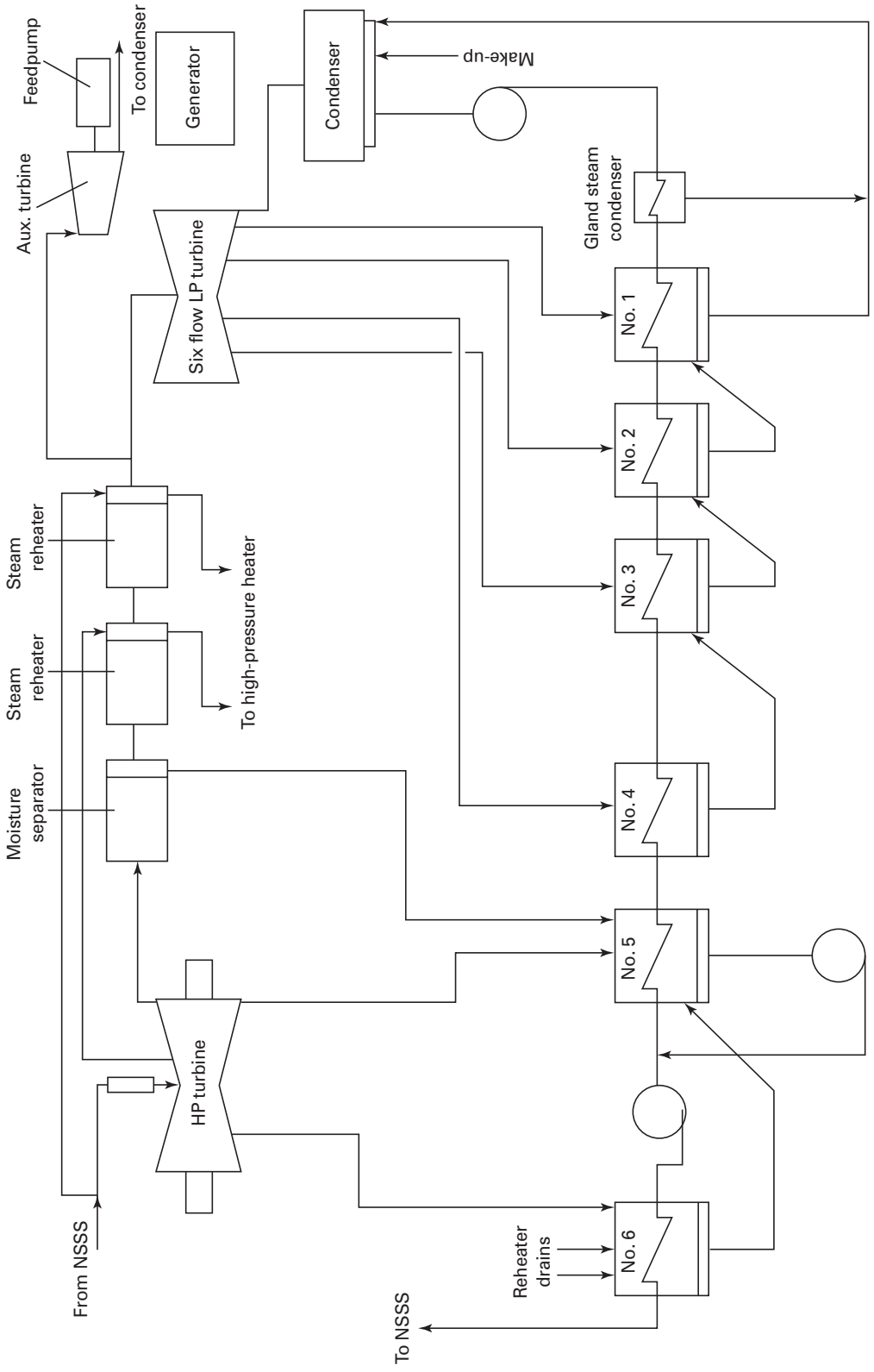

Fig. 8-8 Typical Light-Water Moderated Nuclear Cycle

Copyright ASME International
Provided by IHS under license with ASME
No reproduction or networking permitted without license from IHS
Not for Resale

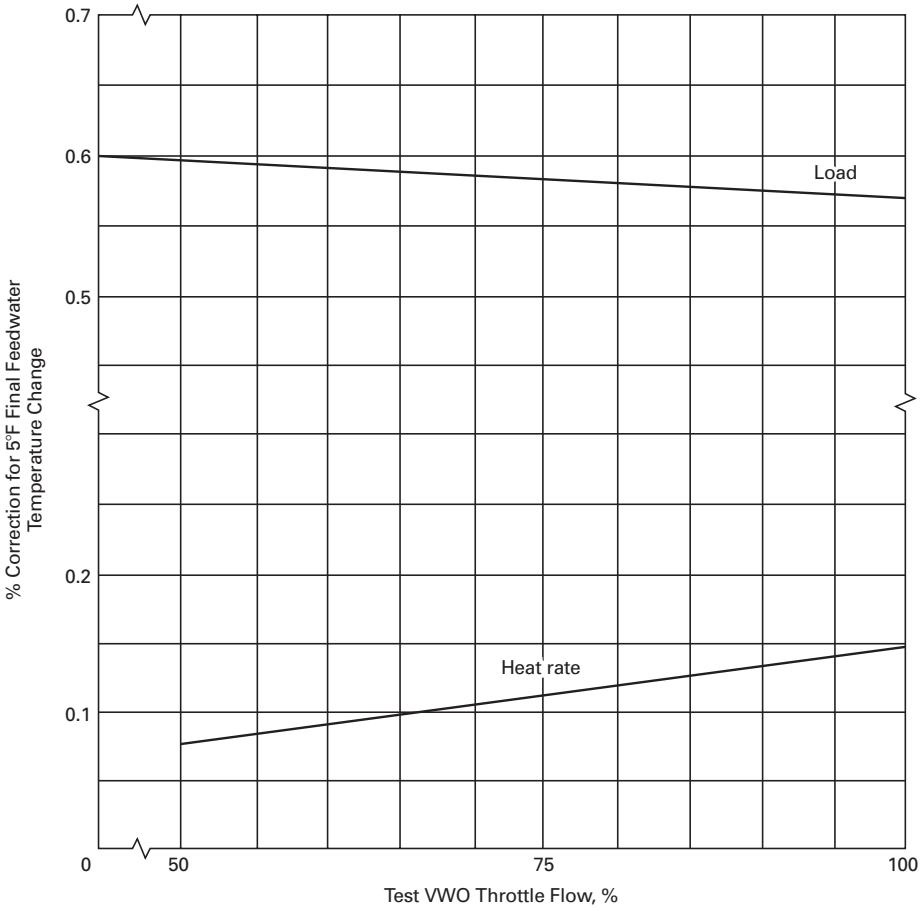

GENERAL NOTES:
(a) Due to top heater terminal temperature difference or extraction pipe pressure drop (different from specified heat balance).
(b) Apply curves at constant control valve opening.

Fig. 8-9 Final Feedwater Temperature Correction for Nuclear Cycles

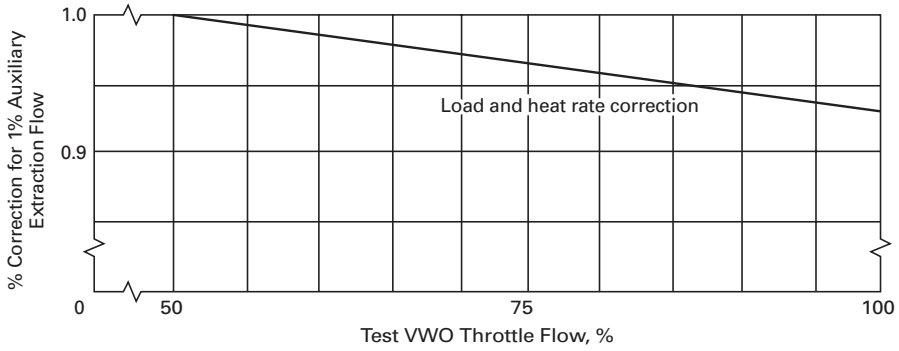

GENERAL NOTES:
(a) Percent auxiliary extraction is percent of throttle flow.
(b) Auxiliary extraction returns to condenser.
(c) Percent auxiliary extraction is percent of throttle flow.
(d) The correction applies to both load and heat rate.

Fig. 8-10 Auxiliary Turbine Extraction Correction for Nuclear Cycles

Copyright ASME International
Provided by IHS under license with ASME
No reproduction or networking permitted without license from IHS
Not for Resale

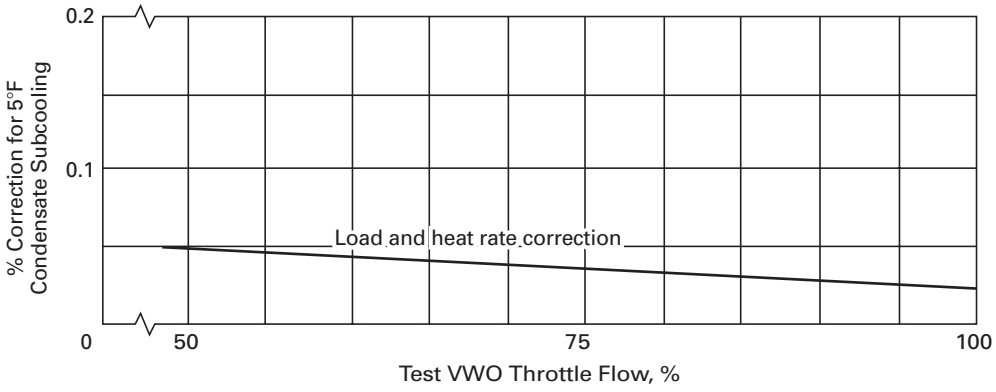

Fig. 8-11 Condensate Subcooling Correction for Nuclear Cycles

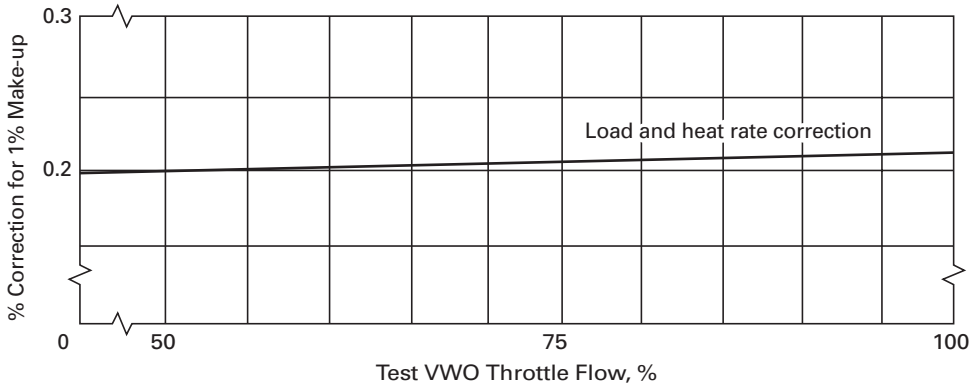

GENERAL NOTES:
(a) Leakage is from main part of steam generator.
(b) Percent make-up is percent of throttle flow.

Fig. 8-12 Condensate Make-up Correction for Nuclear Cycles

Copyright ASME International
Provided by IHS under license with ASME
No reproduction or networking permitted without license from IHS
Not for Resale

Section 9
Rationale for Heat Rate Testing Uncertainty

9-1 OBJECT

The object of this Code, as described in Section 1, is to provide rules for the accurate testing of steam turbines to obtain a performance level with minimum uncertainty. Uncertainty is a measure of the quality of the test and, in accordance with para. 3-14.1, shall not be used to adjust test results. It is the clear and unequivocal intent of the Code that calculation of test uncertainty be used solely for evaluating test quality. Test results shall be reported as calculated from test observations with only such corrections as are provided in the Code.

9-2 SCOPE

When tests are conducted in accordance with the Code, the results of a full-scale Code test for fossil units have an uncertainty of about $\pm 1/4\%$, and there is an uncertainty of about $\pm 1/3\%$ for the alternative test. Steam turbines operating predominantly within the moisture region have uncertainties of about $\pm 3/8\%$ and $\pm 1/2\%$, respectively. These are difficult goals to attain, and parties to the test must agree to conduct the test with scrupulous attention to detail. Subsequent paragraphs will describe the rationale behind these claims.

9-3 HEAT RATE TEST

Turbine heat rates are not determined by obtaining the mean of a large number of repeated tests. In fact, the reported test heat rate may be based on as few as two test runs at each valve point. A large number of repeated heat rate tests is rendered unnecessary because the error distribution and uncertainty of the test procedure are known. The test values, with no modification for test uncertainty, are the best available representations of the true turbine heat rate and are to be used in the comparison to guarantee values.

9-4 MEASUREMENT ERRORS

Measurement error consists of a fixed systematic and random component. The sum of these components (i.e., the error) is the difference between the measured and true value. A series of repeated measurements can be viewed as normally distributed around a mean. After eliminating all known contributions to the bias, or correcting for them by calibration, this mean is taken as the best estimate of the true value.

9-5 VARIATIONS

An exact derivation of the effect of each variable on heat rate for a fossil reheat cycle is a rather complex mathematical exercise since the effects of some variables are dependent on the effects of other variables. The instrumentation and testing techniques specified in the Code, if strictly followed, determine the uncertainty of the measured parameters. Although variations among cycles will cause variations in the effect these measurement uncertainties have on the overall heat rate uncertainties, this effect is secondary. The overall uncertainty in the results of a properly conducted full-scale Code test will, in general, be about $\pm 1/4\%$ at full load, as shown in Table 9-1.

9-6 UNCERTAINTY VALUES

The testing uncertainty is based on an uncertainty of $\pm 0.15\%$ for the coefficient of discharge of the primary flow measurement, an electrical load measurement uncertainty of $\pm 0.1\%$, pressure measurement calibrated to an uncertainty of $\pm 0.1\%$, LP exhaust pressure measurement uncertainty of ± 0.081 in. Hg, secondary flow measurement uncertainty whose combined effects have an uncertainty of $\pm 0.1\%$ or less and the ability to measure temperature to within $\pm 1°$ F. Achievement of these uncertainty values requires compliance with all provisions of this Code.

9-7 TYPICAL TEST UNCERTAINTY CALCULATIONS

An example of a typical test uncertainty calculation for a fossil fuel cycle tested in accordance with the alternative method is given in Table 9-2. Tables 9-3 and 9-4 show similar examples for steam turbines operating in nuclear power plants.

The uncertainties presented in this Section assume that the primary flow throughout the turbine can be established by measuring water flow and that the turbine drives an electric generator. If the primary flow throughout the turbine has to be established totally or in part by measuring steam flow (such as in an automatic extraction unit) or if the turbine drives something other than an electric generator, then test uncertainties significantly higher will normally result.

Copyright ASME International
Provided by IHS under license with ASME
No reproduction or networking permitted without license from IHS
Not for Resale

Table 9-1 Example of a Full-Scale Test Uncertainty Calculation Fossil Condensate Primary Flow Measurement

Parameter	Effect of Error on Heat Rate		Measurement Uncertainty			Heat Rate Uncertainty	
			Systematic ±	Random ±		Systematic ±%	Random ±%
p throttle	0.05	%/%	0.14	0.10	%	0.007	0.005
t throttle	0.06	%/°F	0.95	0.32	°F	0.057	0.019
p cold reheat	0.05	%/%	0.14	0.10	%	0.007	0.005
t cold reheat	0.05	%/°F	0.95	0.32	°F	0.048	0.016
p hot reheat	0.08	%/%	0.14	0.10	%	0.011	0.008
t hot reheat	0.04	%/°F	0.95	0.32	°F	0.038	0.013
t final feedwater	0.04	%/°F	0.95	0.32	°F	0.038	0.013
t feedwater to top heater	0.02	%/°F	0.95	0.32	°F	0.019	0.006
t feedwater at pump discharge	0.06	%/°F	0.95	0.32	°F	0.057	0.019
t deaerator drain	0.09	%/°F	0.95	0.32	°F	0.086	0.029
t main condensate	0.10	%/°F	0.95	0.32	°F	0.095	0.032
w main condensate	1.00	%/%	0.19	0.10	%	0.190	0.100
w steam to feedpump turbine	0.02	%/%	0.88	0.15	%	0.018	0.003
w desuperheat spray	0.01	%/%	0.78	0.15	%	0.008	0.002
p LP exhaust	0.02	%/%	3.50	0.30	%	0.070	0.006
Group 1 corrections	1.00	%/%	0.03	0.01	%	0.030	0.010
w cycle isolation	1.00	%/%	0.05	0.01	%	0.050	0.010
P generator output	1.00	%/%	0.10	0.05	%	0.100	0.050
Total root sum square, single test						±0.289	0.127
Overall single-test uncertainty (root sum square of systematic and random)						±0.32	
Total root sum square, double test						±0.289	0.090
Overall double-test uncertainty (root sum square of systematic and random)						±0.30	

GENERAL NOTE: Group 2 corrections are included in the “effect of error” factors. Attainment of the uncertainty values presented in this table is considered to be difficult but may be accomplished by compliance with all provisions of this Code.

Copyright ASME International
Provided by IHS under license with ASME
No reproduction or networking permitted without license from IHS
Not for Resale

Table 9-2 Example of an Alternative Test Uncertainty Calculation Fossil Feedwater Primary Flow Measurement

Parameter	Effect of Error on Heat Rate		Measurement Uncertainty Systematic ±	Measurement Uncertainty Random ±		Heat Rate Uncertainty Systematic ±%	Heat Rate Uncertainty Random ±%
p throttle	0.05	%/%	0.14	0.10	%	0.007	0.005
t throttle	0.06	%/°F	0.95	0.32	°F	0.057	0.019
p cold reheat	0.05	%/%	0.14	0.10	%	0.007	0.005
t cold reheat	0.05	%/°F	0.95	0.32	°F	0.048	0.016
p hot reheat	0.08	%/%	0.14	0.10	%	0.011	0.008
t hot reheat	0.04	%/°F	0.95	0.32	°F	0.038	0.013
t final feedwater	0.04	%/°F	0.95	0.32	°F	0.038	0.013
t feedwater to top heater	0.02	%/°F	0.95	0.32	°F	0.019	0.006
w main feedwater	1.00	%/%	0.27	0.10	%	0.270	0.100
w steam to feedpump turbine	0.02	%/%	0.88	0.15	%	0.018	0.003
w desuperheat spray	0.09	%/%	0.78	0.15	%	0.070	0.014
p LP exhaust	0.02	%/%	3.50	0.30	%	0.070	0.006
Group 1 corrections	1.00	%/%	0.10	0.03	%	0.100	0.030
w cycle isolation	1.00	%/%	0.02	0.01	%	0.020	0.010
P generator output	1.00	%/%	0.10	0.05	%	0.100	0.050
Total root sum square, single test						±0.335	0.122
Overall single-test uncertainty (root sum square of systematic and random)						±0.36	
Total root sum square, double test						±0.335	0.086
Overall double-test uncertainty (root sum square of systematic and random)						±0.35	

GENERAL NOTES:

(a) Group 2 corrections are included in the "effect of error" factors. Attainment of the uncertainty values presented in this table is considered to be difficult but may be accomplished by compliance with all provisions of this Code.

(b) The main feedwater flow uncertainty accounts for an increased uncertainty due to in-service operation prior to testing and limited visual inspections via the inspection port.

Table 9-3 Example of a Full-Scale Test Uncertainty Calculation Nuclear Condensate Primary Flow Measurement

Parameter	Effect of Error on Heat Rate		Measurement Uncertainty Systematic ±	Measurement Uncertainty Random ±		Heat Rate Uncertainty Systematic ±%	Heat Rate Uncertainty Random ±%
p throttle	0.02	%/%	0.14	0.10	%	0.003	0.002
x throttle steam quality	0.89	%/%	0.10	0.01	%	0.089	0.009
t final feedwater	0.12	%/°F	0.95	0.32	°F	0.114	0.038
w main condensate	0.70	%/%	0.19	0.10	%	0.133	0.070
w HP heater(s) drain	0.30	%/%	0.55	0.05	%	0.165	0.015
w steam to feedpump turbine	0.02	%/%	0.88	0.15	%	0.018	0.003
p LP exhaust	0.04	%/%	5.00	0.30	%	0.200	0.012
Group 1 corrections	1.00	%/%	0.03	0.01	%	0.030	0.010
w cycle isolation	1.00	%/%	0.05	0.01	%	0.050	0.010
P generator output	1.00	%/%	0.10	0.05	%	0.100	0.050
Total root sum square, single test						±0.346	0.098
Overall single-test uncertainty (root sum square of systematic and random)						±0.36	
Total root sum square, double test						±0.346	0.069
Overall double-test uncertainty (root sum square of systematic and random)						±0.35	

GENERAL NOTE: Group 2 corrections are included in the "effect of error" factors. Attainment of the uncertainty values presented in this table is considered to be difficult but may be accomplished by compliance with all provisions of this Code.

Copyright ASME International
Provided by IHS under license with ASME
No reproduction or networking permitted without license from IHS
Not for Resale

Table 9-4 Example of an Alternative Test Uncertainty Calculation Nuclear Feedwater Primary Flow Measurement

Parameter	Effect of Error on Heat Rate	Measurement Uncertainty		Heat Rate Uncertainty	
		Systematic ±	Random ±	Systematic ±%	Random ±%
p throttle	0.02 %/%	0.14	0.10 %	0.003	0.002
x throttle steam quality	0.89 %/%	0.10	0.01 %	0.089	0.009
t final feedwater	0.12 %/°F	0.95	0.32 °F	0.114	0.038
w main feedwater	1.00 %/%	0.27	0.10 %	0.270	0.100
w steam to feedpump turbine	0.02 %/%	0.88	0.15 %	0.018	0.003
p LP exhaust	0.04 %/%	5.00	0.30 %	0.200	0.012
Group 1 corrections	1.00 %/%	0.10	0.03 %	0.100	0.030
w cycle isolation	1.00 %/%	0.03	0.01 %	0.030	0.010
P generator output	1.00 %/%	0.10	0.05 %	0.100	0.050
Total root sum square, single test				±0.394	0.123
Overall single-test uncertainty (root sum square of systematic and random)				±0.41	
Total root sum square, double test				±0.394	0.087
Overall double-test uncertainty (root sum square of systematic and random)				±0.40	

GENERAL NOTES:

(a) Group 2 corrections are included in the “effect of error” factors. Attainment of the uncertainty values presented in this table is considered to be difficult but may be accomplished by compliance with all provisions of this Code.

(b) The main feedwater flow uncertainty accounts for an increased uncertainty due to inservice operation prior to testing and limited visual inspections via the inspection port.

--`,,```,,,,````-`-`,,`,,`,`,,`---

Copyright ASME International
Provided by IHS under license with ASME
No reproduction or networking permitted without license from IHS Not for Resale

NONMANDATORY APPENDIX A
REFERENCES

ASME B16.5-2003, Pipe Flanges and Flanged Fittings: NPS through NPS 24

ASME PTC 1-1999, General Instructions

ASME PTC 2-2001, Definitions and Values

ASME PTC 6 Report 1985 (R1997), Guidance for Evaluation of Measurement Uncertainty in Performance Test of Steam Turbine

ASME PTC 6A-2000, Appendix to PTC 6 Test Code for Steam Turbines

ASME PTC 8.2-1990, Centrifugal Pumps

ASME PTC 12.2-1998, Surface Steam Condensers

ASME PTC 19.1-1998, Test Uncertainty

ASME PTC 19.3-1974 (R2004), Temperature Measurement

ASME PTC 19.5-2004, Flow Measurement

ASME PTC 19.7-1980 (R1988), Measurement of Shaft Horsepower

ASME PTC 19.11-1997, Fans

ASME PTC 19.22-1986 (R1998), Digital Systems Techniques

ASME TDP-1-1998, Recommended Practices for the Prevention of Water Damage to Steam Turbines Used for Electric Power Generation

Publisher: The American Society of Mechanical Engineers (ASME), Three Park Avenue, New York, NY 10016-5990; Order Department: 22 Law Drive, Box 2300, Fairfield, NJ 07007-2300

ASTM D 1066, Method of Sampling Steam

Publisher: American Society for Testing and Materials (ASTM), 100 Barr Harbor Drive, West Conshohocken, PA 19428-2959

ANSI/1IEEE Std. 120, Master Test Guide for Electrical Measurements in Power Circuits

Publisher: Institute of Electrical and Electrical Engineers (IEEE), 445 Hoes Lane, Piscataway, NY 08854

Copyright ASME International
Provided by IHS under license with ASME
No reproduction or networking permitted without license from IHS
Not for Resale

INDEX

Absorption dynamometers (*see* Dynamometers, absorption)
Acceptance tests, 1-1, 3-3.1
Adjustments
  permissible, 3-8.8
Aging (*see also* Test(s), timing), 3-3.1
Agreements (*see* Test(s), agreements)
Alternative test, 1-3, 1-3.3, 1-3.4, 3-1.1
  Group 1 corrections Fossil, 8-1–8-4.8, Table 8-1, Figs. 8-1–8-7
  Group 1 corrections Nuclear, 8-5–8-5.3, Table 8-1, Figs. 8-8–8-12
ASME throat-tap flow nozzle (*see* Flow, primary, flow-section)
Average performance, 5-13

Basket tips (*see* Pressure, measurement, turbine exhaust)
Benchmark tests, 3-3.2
Beta-ratio (*see* Flow, primary, flow section)
Blowdown (*see* Cycle isolation, external)

Calibration
  In-place, 3-10.1
  Instrument, 3-2.1(m), 3-2.1(s), 3-10 (*see also* Electrical power measurement, Flow, primary, water, calibration)
Calorimeter method, 4-19.3
Capability test, 5-5
Capacity test, 3-3.2
Computers, 3-2.1(m), 3-2.2(n), (o), (p)
Corrections, 3-12, 5-1 (*see also* Test(s) corrections)
CTs. (*See* Electrical power measurement, instrument transformers)
Current transformers (*see* Electrical power measurement, instrument transformers)
Cycle isolation, 3-5
  breaking, 3-7.1
  external, 3-5.3
  internal, 3-5.4
  losses (*see* Flow, leakage, unaccounted)

Damping, 4-10.1
Data
  loggers (*see* Computers reduction), 5-3
Density, water, 4-17.2
Departures from code requirements, 1-4.2, 1-4.3, 3-2.2 (*see also* Deviations)
Deposits, 3-3.1, 4-8.18
Deviations from code requirements, 3-8, Tables 3-1, 5-1 (*see also* Departures)
Digital instruments (*see* Test(s), instruments)
Drift, 3-8.3
Duplicate instrumentation (*see* Test(s), instruments)
Dynamometers
  absorption, 4-2.3, 4-2.4
  transmission, 4-2.2

Effectiveness (*see* Turbine)
Efficiency (*see* Turbine, section efficiencies)
Electrical power measurements, 4-4
  A-C generators, 4-4.1–4-4.7
  A-C generator instruments, 4-5.1–4-5.4
  D-C generators, 4-4.8
  D-C generator instruments, 4-6.1–4-6.2
  excitation, 4-5.4
  instrument calibration, 4-7
  instrument connections, 4-5.3
  instrument transformers, 4-5.2
Enthalpy
  calculated turbine exhaust, 5-9
  expansion line end point (ELEP), 5-9.3
  extraction, 4-19.1.5, 4-19.1.7, 4-19.2
  superheat
    effect on state points, 5-9.1
    requirements, 3-1 1.2, 5-9.3(b)
Enthalpy drop
  efficiency tests, 3-3.1, 3-3.2
  steam flow (*see* Flow, steam)
Equivalent instrumentation (*see* Test(s), instruments)
Exhaust loss (*see* Turbine exhaust loss)

Flow
  air ejector, 4-16.5
  cavitation, 4-10.2
  feedwater pump turbine, 4-16.3
  fluctuations, 4-10.1
  heater drains, 4-14.1(d), Fig. 4-15, 4-16.7
  heater extraction steam, 4-16.2
  isolation, 3-5.5
  leakage
    condenser, 3-8.10
    feedwater heater, 3-8.10, 4-16.6
    measurements, 3-2.1 (g)
    packing, 4-16.4
    unaccounted (cycle), 3-5.1
  measurement, 3-5.1, 3-5.6, 3-8.10, 4-13
  moisture separator drains, 4-16.2, Fig. 4-16
  primary
    measurement, 4-8
      recommended method, 4-8.3
      steam, 4-12
        calibration, 4-12.2
        enthalpy drop, 4-15
        installation, 4-12.3
        measurement, 4-12.1, 4-15.1
        superheat, 4-12.4, 4-15.1
      water
        alternative devices, 4-11
        calibration, 4-8.13–4-8.17
        discharge coefficients, 4-8.14. Table 4-2
        flow section, 4-8.4, Figs. 4-3(a), 4-3(b)
          ASME throat-tap flow nozzle, Fig. 4-4
          beta-ratio, 4-8.3–4-8.5
          calibration, 4-8.13–4-8.15
          coefficient of discharge, 4-8.15–4-8.17
          deposits, 4-18.8
          design & manufacture, 4-8.6–4-8.10
          diffuser, 4-8.8, Fig. 4-7(a)
          finish, 4-8.7–4-8.8, Figs. 4-6, 4-7(b)
          flanged assembly, 4-8.11
          inspection port, 4-8.12, Fig. 4-9
          installation, 4-9

--`,,```,,,,````-`-`,,`,,`,`,,`---

Copyright ASME International
Provided by IHS under license with ASME
No reproduction or networking permitted without license from IHS

Not for Resale

manometers, 4-14.1
measurement, 4-8.2
measurement location, 1-3, 4-9.1–4-9.6, Figs. 4-11(a)–(e)
Reynolds number, 4-8.15.2, Fig. 4-10
throat taps, 4-8.6, 4-8.9, 4-8.13, Fig. 4-13
transducers, 4-14.1
water leg correction, Fig. 4-12
welded assembly, 4-8.12, Fig. 4-8
material, 4-8.12
secondary, 4-16
calibration, 3-10.1
manometers, 4-14.3
steam, 4-12.6
straighteners, 4-8.4, Figs. 4-3(a), 4-3(b), 4-5
turbine drivers (see Flow, feedwater pump turbine)
two-phase, 4-16.9
Full scale test, 1-3, 1-3.1, 1-3.2, 3-1.1

Group 1 corrections, 5-8.3
calculation, 5-11 (*see also* Alternative test, Test(s), corrections)
Group 2 corrections, 5-8.4
calculation, 5-12 (*see also* Test(s), corrections)
Guide plates (*see* Pressure, measurement, turbine exhaust)

Heat rate, 5-7
Hydrogen purity, 3-8.4

In-place calibration (*see* Calibration, in-place)
Instrument calibration (*see* Calibration, instrument)
Instrumentation (*see* Test(s), instruments)
Isolation (*see* Cycle isolation, Flow, isolation)

Leakage (*see* Flow, leakage)

Make-up (*see* Cycle isolation, external)
Mandatory test requirements, 1-2
Manometers, 4-17.6–4-17.9, 4-17.20 (*see also* Flow, test section)
Measurement uncertainty, 1-1 (*see also* Test(s), uncertainty)
Mechanical output measurement, 4-2
Mercury instrumentation (*see* Test(s), instruments)
Moisture
correction, 5-2(d)
determination, 4-19
measurement, 4-19.1–4-19.3

Planning (*see* Test(s), planning)
Potential transformers (*see* Electrical power measurement, instrument transformers)
PTs (*see* Electrical power measurement, instrument transformers)
Preliminary tests, 3-3.1, 3-4.5, 5-2
Pressure
air bleeds, 4-17.23
connecting piping, 4-17.21–4-17.22
measurement, 4-17
barometers, 4-17.6, 4-17.11–4-17.14, 4-17.19
barometric transducers, 4-17.11
Bourdon gages, 4-17.5
corrections, absolute pressure, 4-17.36
deadweight gages, 4-17.4
differential, 4-14, 4-17.20
exhaust (*see* Pressure, measurement, turbine exhaust)
initial, 4-17.27
manometers (*see* Manometers)
total, 3-11.1, 4-17
transducers, 4-17.1–4-17.3.4
turbine exhaust, 4-17.1(c), 4-17.15–4-17.18, 4-17.29–4-17.35
basket tips, 4-17.34, Fig. 4-20
guide plates, 4-17.34, Fig. 4-21
pulsation, 4-10.1, 4-17.25
taps, 4-17.21
Primary flow (*see* Flow, primary)
Pulsation (*see* Pressure, measurement)
Pump power measurement, 4-3

Quality (*see* Moisture measurement)

Reaction torque systems (*see* Absorption dynamometers)

Scatter (*see* Test(s), data scatter)
Secondary flow (*see* Flow, secondary)
Shaft torque meters (*see* Transmission Dynamometers)
Source connections, 1-3.4
Speed measurement, 4-20
Steady state, 3-8.1
Steam quality (*see* Moisture measurement)
Steam rate, 5-6
Steam strainer, 4-17.28
Strainers (*see* Steam strainer)
Superheat requirements (*see* Enthalpy and Flow, steam)

Temperature
calibration, 4-18.7
cold junctions, 4-18.6
influential, 4-18.4
measurement, 3-11.1, 4-14.4, 4-18
recommended systems, 4-18.2
wells, 4-18.5
Test(s)
adjustments, 3-8.8
agreement between, 3-7.2
agreements, 1-3.4, 3-1, 3-2
comparison, 3-13
conditions, 3-8
corrections, 3-12, 5-8, 8-1–8-5.3
data, 3-4.6
data scatter, 3-9.2, 3-9.3, Fig. 3-1, 4-8.15.3, 7-11
data validation, 5-2
duration, 3-9.2
frequency of observations, 3-9.1
instruments, 1-4.6, 1-5.2, 4-1
digital, 4-1.6
duplicate, 4-1.2
equivalent, 4-1.3
mercury, 4-1.4, 4-14.3, 4-17.9, 4-17.10
requirements, 4-1.5
number of required readings, 7-1
number of required tests, 3-7
planning, 3-1
procedure, 1-4.1, 1-4.6, 1-5.1
report, 3-4.1, 6-1
requirements, 1-4.2, 1-4.3, 3-1, 3-4, 3-5.3, 4-8.1
results, 3-13, 4-8.1, 5-2
timing, 3-2.1(c), 3-2.2(w), 3-3
throttle flow, 5-4.1
tolerances, 3-14
uncertainty, 1-4.4
analysis, 1-4.5
pretest, 1-4.4, 9-1–9-4
posttest, 1-4.5
requirements, 1-1
Thermodynamic properties, 3-11.3
Thermowells (*see* Temperature, wells)

Copyright ASME International
Provided by IHS under license with ASME
No reproduction or networking permitted without license from IHS
Not for Resale

Throttle flow, 5-4
Time measurement, 4-21
Timing (*see* Test(s), timing)
Tolerances (*see* Test(s), tolerances)
Tracers, 3-2.1(o), (p), 4-19.1
  requirements, 4-19.1.8
Transducers (*see* Pressure, measurement)
Transmission dynamometers (*see* Dynamometers)
Turbine
  control valves, pressure-drop, 3-2.1(n), 3-2.2(h), 3-13.2
  deterioration (*see* Turbine, inspection)
  effectiveness, 5-10.2
  efficiency (*see* Turbine, section efficiencies)
  exhaust loss, 5-9.2, 5-9.3
  expansion line end point (ELEP) (*see* Enthalpy)
  inspection, 3-3.1
  section efficiencies, 3-3.2, 5-2, 5-10.1
  used energy end point (UEEP), 5-9.3(b)
  valve points
    location, 3-6
    mean-of-the-loop, 3-13.3
    test results, 3-13.2
    throttled, 3-13.4

Unaccounted cycle losses (*see* Flow, leakage, unaccounted)
Uncertainty (*see* Measurement uncertainty, Test(s), uncertainty)

Valve points (*see* Turbine valve points)
Valve positions, 3-8.9
Voltage transformers (*see* Potential transformers)
Volume tanks (*see* Weigh tanks)

Water level measurement, 4-22
Weigh tanks, 4-8.2, 4-13

Copyright ASME International
Provided by IHS under license with ASME
No reproduction or networking permitted without license from IHS
Not for Resale

PERFORMANCE TEST CODES (PTC)

General Instructions . . . . . PTC 1-2004
Definitions and Values . . . . . PTC 2-2001
Diesel and Burner Fuels . . . . . PTC 3.1-1958 (R1992)
Fired Steam Generators . . . . . PTC 4-1998
Steam-Generating Units (With 1968 and 1969 Addenda . . . . . PTC 4.1-1964 (R1991)
  Diagram for Testing of a Steam Generator, Figure 1 (Pad of 100)
  Heat Balance of a Steam Generator, Figure 2 (Pad of 100)
ASME Test Form for Abbreviated Efficiency Test — Summary Sheet (Pad of 100) . . . . . PTC 4.1a-1964
ASME Test Form for Abbreviated Efficiency Test — Calculation Sheet (Pad of 100) . . . . . PTC 4.1b-1964 (R1965)
Coal Pulverizers . . . . . PTC 4.2-1969 (R2003)
Air Heaters . . . . . PTC 4.3-1968 (R1991)
Gas Turbine Heat Recovery Steam Generators . . . . . PTC 4.4-1981 (R2003)
Reciprocating Steam Engines . . . . . PTC 5-1949
Steam Turbines . . . . . PTC 6-2004
Interim Test Codes for an Alternative Procedure for Testing Steam Turbines . . . . . PTC 6.1-1984
Steam Turbines in Combined Cycles . . . . . PTC 6.2-2004
Appendix A to PTC 6, The Test Code for Steam Turbines . . . . . PTC 6A-2000
PTC 6 on Steam Turbines — Interpretations . . . . . PTC 6
Guidance for Evaluation of Measurement Uncertainty in Performance Tests of Steam Turbines . . . . . PTC 6 Report-1985 (R2003)
Procedures for Routine Performance Tests of Steam Turbines . . . . . PTC 6S-1988 (R2003)
Reciprocating Steam-Driven Displacement Pumps . . . . . PTC 7-1949 (R1969)
Displacement Pumps . . . . . PTC 7.1-1962 (R1969)
Centrifugal Pumps . . . . . PTC 8.2-1990
Performance Test Code on Compressors and Exhausters . . . . . PTC 10-1997 (R2003)
Fans . . . . . PTC 11-1984 (R2003)
Closed Feedwater Heaters . . . . . PTC 12.1-2000
Performance Test Code on Steam Surface Condensers . . . . . PTC 12.2-1998
Performance Test Code on Deaerators . . . . . PTC 12.3-1997 (R2004)
Moisture Separator Reheaters . . . . . PTC 12.4-1992 (R2004)
Single Phase Heat Exchangers . . . . . PTC 12.5-2000
Reciprocating Internal-Combustion Engines . . . . . PTC 17-1973 (R2003)
Hydraulic Turbines and Pump-Turbines . . . . . PTC 18-2002
Test Uncertainty . . . . . PTC 19.1-1998 (R2004)
Pressure Measurement . . . . . PTC 19.2-1987 (R2004)
Temperature Measurement . . . . . PTC 19.3-1974 (R2004)
Application, Part II of Fluid Meters: Interim Supplement on Instruments and Apparatus . . . . . PTC 19.5-2004
Weighing Scales . . . . . PTC 19.5.1-1964
Electrical Measurements . . . . . PTC 19.6-1955
Measurement of Shaft Power . . . . . PTC 19.7-1980 (R1988)
Measurement of Indicated Power . . . . . PTC 19.8-1970 (R1985)
Flue and Exhaust Gas Analyses . . . . . PTC 19.10-1981
Steam and Water Sampling, Conditioning, and Analysis in the Power Cycle . . . . . PTC 19.11-1997 (R2004)
Measurement of Time . . . . . PTC 19.12-1958
Measurement of Rotary Speed . . . . . PTC 19.13-1961
Linear Measurements . . . . . PTC 19.14-1958
Density Determinations of Solids and Liquids . . . . . PTC 19.16-1965
Determination of the Viscosity of Liquids . . . . . PTC 19.17-1965
Digital Systems Techniques . . . . . PTC 19.22-1986 (R2003)
Guidance Manual for Model Testing . . . . . PTC 19.23-1980 (R1985)
Speed and Load Governing Systems for Steam Turbine-Generator Units . . . . . PTC 20.1-1977 (R1988)
Overspeed Trip Systems for Steam Turbine-Generator Units . . . . . PTC 20.2-1965 (R1986)
Pressure Control Systems Used on Steam Turbine-Generator Units . . . . . PTC 20.3-1970 (R1991)
Particulate Matter Collection Equipment . . . . . PTC 21-1991
Performance Test Code on Gas Turbines . . . . . PTC 22-1997 (R2005)
Atmospheric Water Cooling Equipment . . . . . PTC 23-2003
Ejectors . . . . . PTC 24-1976 (R1982)
Pressure Relief Devices . . . . . PTC 25-2001
Safety and Relief Valves . . . . . PTC 25.3-1988

--`,,```,,,,````-`-`,,`,,`,`,,`---
Copyright ASME International
Provided by IHS under license with ASME
No reproduction or networking permitted without license from IHS
Not for Resale

Speed-Governing Systems for Internal Combustion Engine-Generator Units . . . . . PTC 26-1962
Determining the Properties of Fine Particulate Matter . . . . . PTC 28-1965 (R1985)
Speed-Governing Systems for Hydraulic Turbine-Generator Units . . . . . PTC 29-1965 (R1985)
Air Cooled Heat Exchangers . . . . . PTC 30-1991 (R1998)
Ion Exchange Equipment . . . . . PTC 31-1973 (R1985)
Nuclear Steam Supply Systems . . . . . PTC 32.1-1969 (R1992)
Methods of Measuring the Performance of Nuclear Reactor Fuel in Light Water Reactors . . . . . PTC 32.2 Report-1978 (R1992)
Large Incinerators . . . . . PTC 33-1978 (R1985)
Appendix to PTC 33-1978 . . . . . PTC 33a-1980 (R1991)
ASME Form for Abbreviated Incinerator Efficiency Test Form . . . . . PTC 33a-1980 (R1991)
Measurement of Industrial Sound . . . . . PTC 36-2004
Determining the Concentration of Particulate Matter in a Gas Stream . . . . . PTC 38-1980 (R1985)
Condensate Removal Devices for Steam Systems . . . . . PTC 39.1-1980 (R1991)
Flue Gas Desulfurization Units . . . . . PTC 40-1991
Wind Turbines . . . . . PTC 42-1988 (R2004)
Performance Test Code on Overall Plant Performance . . . . . PTC 46-1996
Fuel Cell Power Systems Performance . . . . . PTC 50-2002
Performance Monitoring Guidelines for Steam Power Plants . . . . . PTC PM-1993

The ASME Publications Catalog shows a complete list of all the Standards published by the Society. For a complimentary catalog, or the latest information about our publications, call 1-800-THE-ASME (1-800-843-2763).

Copyright ASME International
Provided by IHS under license with ASME
No reproduction or networking permitted without license from IHS
Not for Resale

ASME PTC 6-2004

ISBN 0-7918-2935-9





C02804

--`,,```,,,,````-`-`,,`,,`,`,,`---

Copyright ASME International
Provided by IHS under license with ASME
No reproduction or networking permitted without license from IHS

Not for Resale