ASME PTC 6.2-2004

Steam Turbines in Combined Cycles

Performance Test Codes

AN AMERICAN NATIONAL STANDARD



The American Society of Mechanical Engineers

--`,,```,,,,````-`-`,,`,,`,`,,`---

Copyright ASME International
Provided by IHS under license with ASME
No reproduction or networking permitted without license from IHS

Not for Resale

ASME PTC 6.2-2004

Steam Turbines in Combined Cycles

Performance Test Codes

AN AMERICAN NATIONAL STANDARD

The American Society of Mechanical Engineers

Three Park Avenue • New York, NY 10016

Copyright ASME International
Provided by IHS under license with ASME
No reproduction or networking permitted without license from IHS

Not for Resale

Date of Issuance: August 15, 2005

This Standard will be revised when the Society approves the issuance of a new edition. There will be no addenda issued to this edition.

ASME issues written replies to inquiries concerning interpretations of technical aspects of this Standard. Interpretations are published on the ASME Web site under the Committee Pages at http://www.asme.org/codes/ as they are issued.

ASME is the registered trademark of The American Society of Mechanical Engineers.

This code or standard was developed under procedures accredited as meeting the criteria for American National Standards. The Standards Committee that approved the code or standard was balanced to assure that individuals from competent and concerned interests have had an opportunity to participate. The proposed code or standard was made available for public review and comment that provides an opportunity for additional public input from industry, academia, regulatory agencies, and the public-at-large.

ASME does not "approve," "rate," or "endorse" any item, construction, proprietary device, or activity.

ASME does not take any position with respect to the validity of any patent rights asserted in connection with any items mentioned in this document, and does not undertake to insure anyone utilizing a standard against liability for infringement of any applicable letters patent, nor assumes any such liability. Users of a code or standard are expressly advised that determination of the validity of any such patent rights, and the risk of infringement of such rights, is entirely their own responsibility.

Participation by federal agency representative(s) or person(s) affiliated with industry is not to be interpreted as government or industry endorsement of this code or standard.

ASME accepts responsibility for only those interpretations of this document issued in accordance with the established ASME procedures and policies, which precludes the issuance of interpretations by individuals.

No part of this document may be reproduced in any form,
in an electronic retrieval system or otherwise,
without the prior written permission of the publisher.

The American Society of Mechanical Engineers
Three Park Avenue, New York, NY 10016-5990

Copyright © 2005 by
THE AMERICAN SOCIETY OF MECHANICAL ENGINEERS
All rights reserved
Printed in U.S.A.

Copyright ASME International
Provided by IHS under license with ASME
No reproduction or networking permitted without license from IHS

Not for Resale

CONTENTS

Notice v
Foreword vi
Committee Roster vii
Correspondence With the PTC 6.2 Committee ix

Section 1 Object and Scope 1
1-1 Object 1
1-2 Scope 1
1-3 Uncertainty 1

Section 2 Definitions and Description of Terms 2
2-1 Symbols 2
2-2 Abbreviations 2
2-3 Definitions 2

Section 3 Guiding Principles 4
3-1 Introduction 4
3-2 Test Plan 7
3-3 Preliminary Testing 8
3-4 Isolation of the Cycle 9
3-5 Conduct of Test 10
3-6 Calculation and Reporting of Results 14

Section 4 Instruments and Methods of Measurement 16
4-1 General Requirements 16
4-2 Pressure Measurement 21
4-3 Temperature Measurement 24
4-4 Flow Measurement 27
4-5 Electrical Generation Measurement 30
4-6 Data Collection and Handling 34

Section 5 Computation of Results 36
5-1 Fundamental Equation 36
5-2 Data Reduction 36
5-3 Correction of Test Results to Specified Conditions 36
5-4 Uncertainty Analysis 44

Section 6 Report of Results 46
6-1 General Requirements 46
6-2 Executive Summary 46
6-3 Introduction 46
6-4 Calculations and Results 46
6-5 Instrumentation 46
6-6 Conclusion 47
6-7 Appendices 47

Figures
3-1.2-1 Three-Pressure Reheat Steam Turbine Heat Balance 5
3-1.2-2 Two-Pressure Nonreheat Steam Turbine Heat Balance 6
3-1.3.2 Net Turbine Equipment Electrical Output 6
3-5.5.1 Required Number of Readings 12

Copyright ASME International
Provided by IHS under license with ASME
No reproduction or networking permitted without license from IHS
Not for Resale

3-5.5.3 Uncertainty Intervals 13
4-1.2.3-1 Location and Type of Test Instrumentation for Combined Cycle (Triple Pressure HP/IP-LP Reheat Steam Turbine) Test Procedure 17
4-1.2.3-2 Location and Type of Test Instrumentation for Combined Cycle (Triple Pressure HP-IP/LP Reheat Steam Turbine) Test Procedure 18
4-2.6.2-1 Five-Way Manifold 23
4-2.6.2-2 Water Leg Correction for Flow Measurement 23
4-2.7.3-1 Basket Tip 24
4-2.7.3-2 Guide Plate 24
4-5.2.1-1 Two-Meter System for Use on Three-Wire Delta-Connected Power Systems . . . 30
4-5.2.1-2 Two-Meter System for Use on Three-Wire Wye-Connected Power Systems 31
4-5.2.2 Three-Meter System for Use on Four-Wire Power Systems 31
5-3.2.1 Illustration of a Correction Curve With Independent and Interacting Variables 41
5-3.2.2 Illustration of a Correction Curve With Two Independent Variables 41

Tables

2-1 Symbols 2
3-1.3.5 Allowable Deviations 7
3-2.4.2 Definition of Variables for Benchmark Testing 8
3-5.5.1 Definitions and Notes for Fig. 3-5.5.1 13
3-6.4.1 Allowable Uncertainty 15
4-4.1.4 Units in the General Flow Equation 28
4-4.1.5-1 Summary Uncertainty of Discharge Coefficient and of Expansion Factor, Pressure, and Differential Pressure in the Same Units 29
4-4.1.5-2 Uncertainties in Mass Flow for Correctly Applied Differential Pressure Flow Meters 29
5-1 Application of Corrections 37
5-3.1.1 Correction Formulations 38
5-3.2.1 Output From a Turbine Performance Modeling Program, Example 1 41
5-3.2.2 Output From a Turbine Performance Modeling Program, Example 2 41
5-3.3 Terms Used for Flow Capacity Correction 42

Mandatory Appendices

I Correction Formulation Methodology 49
II Procedure for Fitting a Calibration Curve of an Orifice-Metering Run 55

Nonmandatory Appendices

A Sample Test Calculation 58
B Sample Test Uncertainty Calculation 76
C Sample Flow Calculations for Differential Pressure Meters 83
D Procedures for Determining HP to IP Leakage Flow 89

Copyright ASME International
Provided by IHS under license with ASME
No reproduction or networking permitted without license from IHS
Not for Resale

NOTICE

All Performance Test Codes must adhere to the requirements of ASME PTC 1, General Instructions. The following information is based on that document and is included here for emphasis and for the convenience of the user of the Code. It is expected that the Code user is fully cognizant of Sections 1 and 3 of ASME PTC 1 and has read them prior to applying this Code.

ASME Performance Test Codes provide test procedures that yield results of the highest level of accuracy consistent with the best engineering knowledge and practice currently available. They were developed by balanced committees representing all concerned interests and specify procedures, instrumentation, equipment-operating requirements, calculation methods, and uncertainty analysis.

When tests are run in accordance with a Code, the test results themselves, without adjustment for uncertainty, yield the best available indication of the actual performance of the tested equipment. ASME Performance Test Codes do not specify means to compare those results to contractual guarantees. Therefore, it is recommended that the parties to a commercial test agree before starting the test and preferably before signing the contract on the method to be used for comparing the test results to the contractual guarantees. It is beyond the scope of any Code to determine or interpret how such comparisons shall be made.

Copyright ASME International
Provided by IHS under license with ASME
No reproduction or networking permitted without license from IHS
Not for Resale

FOREWORD

ASME Performance Test Code 6 on Steam Turbines is most directly targeted for application to steam turbines in regenerative feedwater heater cycles. A Performance Test Code has heretofore not existed to provide procedures for the accurate testing of steam turbines in a Combined Cycle application. The procedures for testing a steam turbine in a Combined Cycle differ from those used to test a steam turbine in a regenerative feedwater heater cycle because of differences in cycle configuration and test objectives.

In recognition of these differences and to facilitate testing of Steam Turbines in Combined Cycle Applications, the ASME Board on Performance Test Codes approved the formation of a committee (PTC 6.2) on June 7, 2000, with the charter of developing a code for testing of Steam Turbines in Combined Cycle Applications. The resulting committee included experienced and qualified users, manufacturers, and general interest category personnel from the domestic regulated, the domestic nonregulated, and the international electric power generating industry. The organizational meeting of this committee was held on August 15–16, 2000.

In developing this Code, the Committee reviewed industry practices with regard to determining the performance of a steam turbine in a combined cycle application. The Committee has strived to develop an objective code that addresses the need for explicit testing methods and procedures while providing maximum flexibility in recognition of the wide range of combined cycle applications and testing methodologies.

The Code was approved by the PTC 6.2 Committee on October 24, 2003. It was then approved and adopted by the Council as a Standard practice of the Society by action of the Board on Performance Test Codes on January 13, 2004. It was also approved as an American National Standard by the ANSI Board of Standards Review on August 6, 2004.

--`,,```,,,,````-`-`,,`,,`,`,,`---

Copyright ASME International
Provided by IHS under license with ASME
No reproduction or networking permitted without license from IHS

Not for Resale

PERFORMANCE TEST CODE COMMITTEE 6.2 ON STEAM TURBINES IN COMBINED CYCLES

(The following is the roster of the Committee at the time of approval of this Standard.)

OFFICERS

M. P. McHale, *Chair*
K. Stone, *Vice Chair*
J. H. Karian, *Secretary*

COMMITTEE PERSONNEL

D. Bibayan, Consultant
A. E. Butler, General Electric Co.
P. G. Albert, *Alternate*, General Electric Co.
W. C. Campbell, Southern Company Services
S. Dinkar, Siemens Westinghouse
J. R. Friedman, Siemens Westinghouse
B. Bohinski, *Alternate*, Siemens Westinghouse
J. H. Karian, The American Society of Mechanical Engineers
T. K. Kirkpatrick, Power Generation Technologies
M. P. McHale, McHale Associates
J. Nobe, National Energy Production
K. R. Price, S&W Consultants/Shaw Group Co.
K. Stone, General Electric Co.
E. Sundstrom, Consultant
J. Westcott, Westcott Enterprises, Inc.
W. C. Wood, Duke/Fluor Daniel
Z. Yi, TPRI, State Power Corp. of China
J. Zachary, Bechtel Power Corp.
J. Zoller, Black & Veatch

--`,,```,,,,````-`-`,,`,,`,`,,`---

Copyright ASME International
Provided by IHS under license with ASME
No reproduction or networking permitted without license from IHS

Not for Resale

BOARD ON PERFORMANCE TEST CODES

OFFICERS

J. G. Yost, *Chair*
J. R. Friedman, *Vice Chair*
S. Weinman, *Secretary*

BOARD PERSONNEL

P. G. Albert
R. P. Allen
J. M. Burns
W. C. Campbell
M. J. Dooley
A. J. Egli
J. R. Friedman
P. M. Gerhart
G. J. Gerber
T. C. Heil
R. A. Johnson
T. S. Jonas
D. R. Keyser
S. J. Korellis
M. P. McHale
P. M. McHale
J. W. Milton
S. P. Nuspl
A. L. Plumley
R. R. Priestley
J. A. Rabensteine
J. Siegmund
J. A. Silvaggio, Jr.
W. G. Steele, Jr.
J. C. Westcott
W. C. Wood
J. G. Yost

Copyright ASME International
Provided by IHS under license with ASME
No reproduction or networking permitted without license from IHS
Not for Resale

CORRESPONDENCE WITH THE PTC 6.2 COMMITTEE

General. ASME Codes are developed and maintained with the intent to represent the consensus of concerned interests. As such, users of this Code may interact with the Committee by requesting interpretations, proposing revisions, and attending Committee meetings. Correspondence should be addressed to:

Secretary, PTC 6.2 Standards Committee
The American Society of Mechanical Engineers
Three Park Avenue
New York, NY 10016-5990

Proposing Revisions. Revisions are made periodically to the Code to incorporate changes which appear necessary or desirable, as demonstrated by the experience gained from the application of the Code. Approved revisions will be published periodically.

The Committee welcomes proposals for revisions to this Code. Such proposals should be as specific as possible, citing the paragraph number(s), the proposed wording, and a detailed description of the reasons for the proposal including any pertinent documentation.

Interpretations. Upon request, the PTC 6.2 Committee will render an interpretation of any requirement of the Code. Interpretations can only be rendered in response to a written request sent to the Secretary of the PTC 6.2 Standards Committee.

The request for interpretation should be clear and unambiguous. It is further recommended that the inquirer submit his request in the following format:

Subject:	Cite the applicable paragraph number(s) and a concise description.
Edition:	Cite the applicable edition of the Code for which the interpretation is being requested.
Question:	Phrase the question as a request for an interpretation of a specific requirement suitable for general understanding and use, not as a request for an approval of a proprietary design or situation. The inquirer may also include any plans or drawings, which are necessary to explain the question; however, they should not contain proprietary names or information.

Requests that are not in this format will be rewritten in this format by the Committee prior to being answered, which may inadvertently change the intent of the original request.

ASME procedures provide for reconsideration of any interpretation when or if additional information that might affect an interpretation is available. Further, persons aggrieved by an interpretation may appeal to the cognizant ASME Committee. ASME does not "approve," "certify," "rate," or "endorse" any item, construction, proprietary device, or activity.

Attending Committee Meetings. The PTC 6.2 Standards Committee holds meetings or telephone conferences, which are open to the public. Persons wishing to attend any meeting or telephone conference should contact the Secretary of the PTC 6.2 Standards Committee or check our Web site http://www.asme.org/codes/.

--`,,```,,,,````-`-`,,`,,`,`,,`---

Copyright ASME International
Provided by IHS under license with ASME
No reproduction or networking permitted without license from IHS

Not for Resale

--`,,```,,,,````-`-`,,`,,`,`,,`---

Copyright ASME International
Provided by IHS under license with ASME
No reproduction or networking permitted without license from IHS
Not for Resale

STEAM TURBINES IN COMBINED CYCLES

Section 1
Object and Scope

1-1 OBJECT

This Code provides procedures for the accurate testing of steam turbines in combined cycles. It is the intent of this Code that accurate instrumentation and measurement techniques be used to determine performance. In planning and running the test, the Code User must strive to follow the procedures in this Code to meet the uncertainty requirements.

1-2 SCOPE

This Code may be used for testing steam turbines in combined cycles with or without supplementary firing and in cogeneration applications. Within these categories of combined and cogeneration cycles, this Code is applicable to condensing and noncondensing steam turbines, to reheat and nonreheat steam turbines, and to induction/extraction steam turbines. The variety of cycles presents challenges in writing a code that addresses all issues encountered for all cycle configurations. ASME PTC 6 is the appropriate code for testing steam turbines in nuclear and fossil-fired regenerative feedwater heater cycles. This Code is applicable only to turbines in cycles in which steam is the working fluid.

This Code provides procedures for testing and calculating turbine-generator output performance corrected to reference conditions as a measure of overall turbine performance. This Code contains rules and procedures for the conduct and reporting of steam turbine testing, including requirements for pretest arrangements, testing techniques, instrumentation, methods of measurement, and methods for calculating test results and uncertainty.

1-3 UNCERTAINTY

The underlying philosophy of this Code is to achieve test results of the lowest uncertainty based on current technology and knowledge, taking into account test cost and value of the information obtained. To accomplish this and because of the various configurations covered by this Code, an upper limit for the uncertainty of each parameter is established. Exceeding the upper limit of any parameter's uncertainty requirement is allowable only if it is demonstrated that the selection of all instrumentation will result in an overall test uncertainty equal to or less than what it would have been had all parameters' uncertainty requirements been followed.

A pretest uncertainty analysis is required. It serves to establish the expected level of uncertainty for the test. The test uncertainty shall be calculated in accordance with the procedures defined herein and by ASME PTC 19.1, Test Uncertainty.

A post-test uncertainty analysis is also required. It is used to determine the uncertainty for the actual test. This analysis should confirm the pretest systematic and random uncertainty estimates and validate the quality of the test results.

The maximum uncertainty permitted by the Code will be influenced by the actual turbine cycle and the sensitivity of the corrected results to cycle variables. The combination of the applicable test uncertainty limits of each of the measurands shown in Table 3-6.4.1 and Section 4 will determine the allowable test uncertainty for that particular configuration and test. For example, the calculated uncertainty for a typical reheat cycle derived using the limiting uncertainties of all components is 0.5%, as given in Nonmandatory Appendix B.

Copyright ASME International
Provided by IHS under license with ASME
No reproduction or networking permitted without license from IHS
Not for Resale

Section 2
Definitions and Description of Terms

2-1 SYMBOLS

The symbols in Table 2-1 are to be used unless otherwise defined in the text.

Table 2-1 Symbols

Symbol	Definition	Units	
		SI	U.S. Customary
A	Area	m^2	$in.^2$
B	Systematic uncertainty	. . .	. . .
d	Primary element throat diameter	mm	in.
D	Pipe internal pipe diameter	mm	in.
F	Force	N	lbf
f	Fraction of flow	. . .	. . .
g	Local value of acceleration	m/s^2	ft/sec^2
g_0	Standard value of acceleration due to gravity = 9.80665 m/s^2 (32.17405 ft/sec^2) [Note (1)]		
h	Specific enthalpy	kJ/kg	Btu/lbm
$\dot{m}$,q_m	Mass flow rate	kg/s	lbm/hr
m	Mass	kg	lbm
P	Power	kW	kW
p	Pressure	kPa	psia
s	Specific entropy	J/(kg·K)	Btu/lbm °R
t	Temperature	°C	°F
T	Absolute temperature	K	°R
V	Velocity	m/s	ft/sec
v	Specific volume	m^3/kg	ft^3/lbm
U	Total uncertainty	. . .	. . .
w	Mass flow capacity	kg/s	lbm/hr
Δ_i	Delta power corrections	kW	kW
Δh	Specific enthalpy difference	kJ/kg	Btu/lbm
$\Delta\dot{m}$	Difference in mass flow rate	kg/s	lbm/hr
η	Efficiency		

NOTE:
(1) This is an internationally agreed upon value that is close to the mean at 45 deg N latitude at sea level.

2-2 ABBREVIATIONS

corr	Corrected
HP	High Pressure Section
HPe	High Pressure Section exhaust
HPi	High Pressure Section inlet
HPloss	Steam mass flow leaks between the HP inlet and HP exhaust
HRSG	Heat Recovery Steam Generator
IP	Intermediate Pressure Section
Isen	Isentropic (used to denote an enthalpy derived from an isentropic expansion)
LP	Low Pressure Section
meas	Measured
tst	Test
ref	Reference
rht	Reheat
rhtspray	Reheat spray
sen	Sensing line
sg	Specific gravity of fluid referenced to water at 68°F
th	Throttle

2-3 DEFINITIONS

bivariate correction: a correction that is a function of two independent parameters.

controlled pressure inlet: the steam turbine operating mode in which the steam turbine inlet control valves open or close to control the steam pressure. The result is a change in flow. This mode of operation has been called *turbine follow*.

empirical formulation: a representative equation to determine the discharge coefficient for a flow meter developed via theory and experience without application of meter-specific calibration data.

floating pressure inlet: a steam turbine operating mode in which the steam turbine inlet control valves are not modulated, usually controlled to 100% open. Since the control valve position remains constant, any change in inlet steam flow and, to a lesser degree, inlet steam temperature, will result in a change in inlet pressure. This mode of operation is often used in steam cycles that are the bottoming cycles for a combined cycle system.

flow capacity: the steam flow rate that will pass into the HP turbine system at the reference steam pressure and temperature and with the control valves 100% open. The reference conditions should be defined immediately upstream of all equipment within the scope of the test. For example, if separately mounted protection or control valves at the inlet of the turbine are included within the scope of the test, the flow capacity should be defined at the entrance to these valves.

flow-metering run: the entire section(s) of piping, consisting of the primary element, flow conditioner (if applicable), and upstream and downstream piping, that con-

--`,,```,,,,````-`-`,,`,,`,`,,`---
Copyright ASME International
Provided by IHS under license with ASME
No reproduction or networking permitted without license from IHS
Not for Resale

forms to the overall straight length and other manufacturing and installation requirements, which are codified.

induction flow: any steam flow from a source external to the steam turbine that is introduced into the turbine steam path downstream of the HP turbine inlet. Turbine shaft packing leak-offs that are reintroduced to the steam path are not considered induction flows. For reheat cycles, steam flows introduced within the reheater system are also considered induction flows. Induction flows are also often called admission flows.

net generator output: generator electrical output after all generator losses and excitation power has been deducted. This is also the same as gross turbine output.

net turbine electrical output: net generator output less steam turbine-generator auxiliary power, as shown in Fig. 3-1.3.2.

parameter: a parameter is a physical quantity at a location that is sensed by direct measurement of a single instrument or determined by the averaged measurements of several similar instruments.

primary element: the component of a differential pressure flow-metering run, which is flanged or welded between specially manufactured pipe sections, across which the pressure drop is measured to calculate flow. The component may be an orifice plate, a nozzle, or a venturi.

reference heat balance: diagram indicating the base thermodynamic conditions for the steam turbine to which test results are corrected.

univariate correction: a correction that is a function of only one independent parameter.

variable: a variable is an unknown quantity in an algebraic equation that must be determined. The performance equations in Section 5 contain the variables used to calculate the resulting corrected power output performance of a steam turbine in a combined cycle.

Copyright ASME International
Provided by IHS under license with ASME
No reproduction or networking permitted without license from IHS Not for Resale

Section 3
Guiding Principles

3-1 INTRODUCTION

This Section provides guidance on the conduct of performance testing of steam turbines in combined cycle applications. It outlines the steps required to plan, conduct, and evaluate a Code test for the determination of steam turbine performance. The section is divided into the following subsections:

(a) test plan (subsection 3-2)
(b) preliminary testing (subsection 3-3)
(c) isolation of the cycle (subsection 3-4)
(d) conduct of test (subsection 3-5)
(e) calculation and reporting of results (subsection 3-6)

The Code recognizes that there are many different types of steam turbine configurations operating in different modes within the overall constraint of a combined cycle plant. The overall test goal shall be the determination of the steam turbine power output at a predetermined set of reference conditions, including all flows entering and leaving the test envelope. Such corrected output is defined as Output Performance.

The test must be designed with the appropriate knowledge of the configuration and operating mode of the turbine in order to ensure that the proper procedures are developed, the appropriate operating mode is followed during the test, and the correct performance equations are applied. Section 5 provides information on the general performance equation(s) and variations of the equation(s) to support the specific test objectives.

3-1.1 Requirement for Agreements

For multiparty tests, agreement shall be reached as to the specific objective of the test and to the method of operation. These agreements shall reflect the intent of any applicable contract or specification. Any specified or contract operating conditions, or any specified performance that are pertinent to the objective of the test, shall be ascertained. Any omissions or ambiguities as to any of the conditions are to be eliminated or their values or intent agreed upon before the test is started. The cycle arrangement and operating conditions shall be established during the agreement on test methods. Agreement shall be reached on the acceptance or rejection of test data, final test analysis, and test report.

3-1.1.1 Engineering Phase Agreements. The following is a list of typical items upon which agreement shall be reached during the engineering phase of the plant:

(a) objective of the test and methods of operation
(b) the intent of any contract or specification as to timing of test, operating conditions including base reference conditions, and guarantees, including definitions and methods of comparing test results with guarantees, and definition of the test boundary
(c) the impact of any design specifications on the test procedures and methods for evaluating results
(d) classification of primary measurements
(e) means of measuring primary flows and required accuracy
(f) method of determining internal steam leakage between turbine sections
(g) location of, and piping arrangement around flow-measuring devices on which test calculations are to be based
(h) number and location of valves or other means required to ensure that no unaccounted for flow enters or leaves the test boundary or bypasses the steam turbine
(i) number and location of temperature wells and pressure connections
(j) number and location of duplicate instrument connections
(k) method of quantifying leak off flows, orificed continuous-drain flows, and continuous blowdowns
(l) means of measuring pump shaft and seal leakage flows
(m) procedure for determining the condition of the turbine prior to the test per para. 3-2.4
(n) the action to be taken on evidence of deterioration of the turbine
(o) control and admission valve operating modes
(p) means for measuring auxiliary flows (i.e., spray flows and process extractions)
(q) type of electrical load measurement system
(r) initial pretest uncertainty analysis and post-test uncertainty analysis calculation procedure
(s) confidentiality of results

3-1.1.2 Pretest Agreements. The following is a list of typical items upon which agreement shall be reached prior to conducting the test:

(a) determination of the parameters to be used in the calculation of test variables.
(b) means for maintaining constant test conditions as defined in paras. 3-5.3.2 and 3-5.3.7.

Copyright ASME International
Provided by IHS under license with ASME
No reproduction or networking permitted without license from IHS
Not for Resale

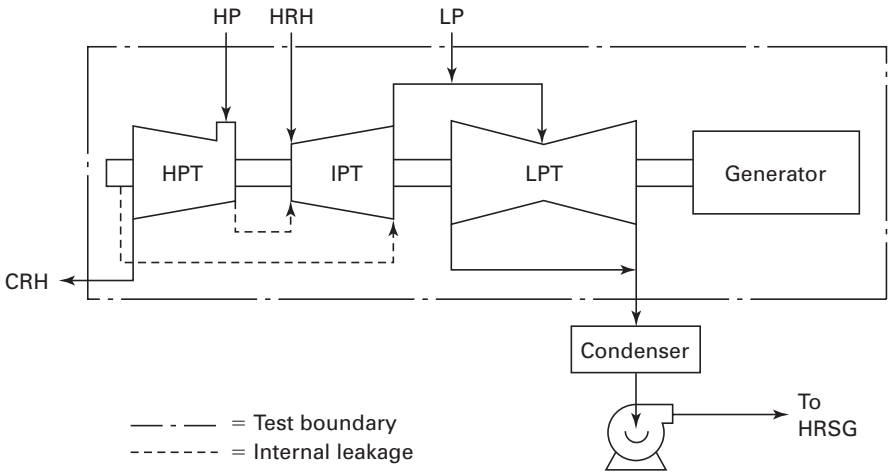

Fig. 3-1.2-1 Three-Pressure Reheat Steam Turbine Heat Balance

(c) location, type, and calibration of instruments.

(d) valve lineup list defining the position of manual and automatic valves.

(e) organization and training of test participants, test direction, arrangements for data collection, and data reduction.

(f) operating conditions at which test runs are to be conducted including, but not limited to, the electrical output loads, extraction and admission levels, valve positions, steam blowdown, and cycle make-up.

(g) number of test runs.

(h) duration of each test run.

(i) duration of stabilization period prior to beginning a test run.

(j) methods of determining the validity of repeated test runs.

(k) frequency of observations.

(l) analytical correction procedures and factors to correct test conditions to specified conditions.

(m) applicable ASME Steam Table Versions (see para. 3-6.6).

(n) method of conducting test runs to determine the value of any correction factors that cannot be analytically determined by simulation.

(o) system limitations caused by external factors that prevent attainment of design operation within a practical time period. This may include a situation where full load cannot be attained or a case where a steam host is unavailable to accept process.

(p) method of determining electrical output at the test boundary. Chargeable turbine auxiliary power, such as oil pumps, control power, steam seal exhausters, and excitation, shall be considered.

(q) specific responsibilities of each party to the test.

(r) pretest uncertainty analysis.

(s) agreed upon test procedure.

(t) number and types of copies of original data.

(u) conditions for rejection of test runs or data sets.

3-1.2 Test Boundaries

The test boundary is an accounting concept used to identify and define the energy streams that must be determined to calculate performance. All input and output energy streams required for test calculations must be determined with reference to the point at which they cross the boundary. Energy streams within the boundary need not be determined unless they verify base operating conditions or unless they relate functionally to conditions outside the boundary. The following energy streams cross the boundary:

(a) all thermal energy inputs (steam admissions)

(b) all thermal energy outputs (steam extractions)

(c) all electrical output

The specific test boundary for a particular test must be clearly defined. Some or all of the typical streams required for common plant cycles are shown in Figs. 3-1.2-1 and 3-1.2-2. Solid lines indicate some or all of mass flow rate and thermodynamic conditions of streams crossing the test boundary, which have to be determined to calculate the results of a steam turbine performance test operating in combined cycle applications. The properties of streams indicated by dashed lines may be required for an energy and mass balance, but may not have to be determined to calculate the test results.

3-1.3 Required Measurements

The required measurements are dictated by the test boundary, which is based on the contract guarantee.

3-1.3.1 Energy Flows. Measure or calculate mass flows and necessary thermodynamic properties (including pressure and temperature) at the point at which they cross the test boundary. The test boundary is at the point where the stream enters or leaves the steam turbine or a component of the turbine. The actual measurement or measurements may be upstream or down-

Copyright ASME International
Provided by IHS under license with ASME
No reproduction or networking permitted without license from IHS
Not for Resale

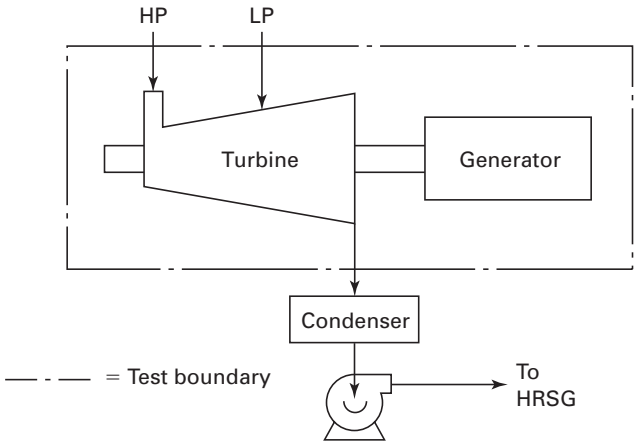

Fig. 3-1.2-2 Two-Pressure Nonreheat Steam Turbine Heat Balance

stream of that point if a better measuring location is available and if the flow and flow properties at the metering location can be accurately corrected to the conditions at the test boundary.

3-1.3.2 Electric Power. Measure or calculate the electrical output at the point at which it crosses the test boundary. The electrical output typically corresponds to the net turbine equipment electrical output as defined in Section 2 and shown in Fig. 3-1.3.2.

3-1.3.3 Turbine Exhaust Pressure. Corrections to the steam turbine electric power output are required for differences between the reference and test exhaust pressure. Turbine exhaust pressure shall be measured in accordance to para. 4-2.7.

3-1.3.4 Criteria for Selection of Measurement Locations. The criteria for selecting the specific measurement locations for all test parameters of interest shall be based on minimizing the overall test uncertainty. The overall test uncertainty shall be obtained following the guidelines and methods described in Section 5, Nonmandatory Appendix B and ASME PTC 19.1.

3-1.3.5 Design, Construction, and Start-up Considerations. Consideration should be given to the requirements of instrumentation accuracy, calibration, recalibration, documentation requirements, and location of permanent plant instrumentation to be used for testing. Section 4 provides more detail describing required test instrumentation. Adequate provisions for installation of temporary instrumentation where plant instrumentation is not adequate to meet the requirements of this Code must also be considered during the design stages. For example, provision should be made for test thermowells at required locations.

Provisions are necessary to maintain the test values within the appropriate permissible deviations from design values in Table 3-1.3.5. Table 3-1.3.5 includes items to consider during the specific plant design, construction, and start-up. The table includes items mostly within the control of the purchaser, such as flow and temperatures, as well as items that are mostly within the control of the manufacturer, such as flow capacity and turbine efficiency. It is recommended that pretest agreements clarify how the corrections and test results are to be interpreted should any of the allowable deviations be exceeded. The Code User should recognize that the allowable deviations shown in Table 3-1.3.5 have been determined to limit the uncertainty of the test corrections to less than 0.1%. These allowable deviations do not imply design specifications. Design specifications should be considered independently and may be either broader or stricter than the limitations stated in the Code.

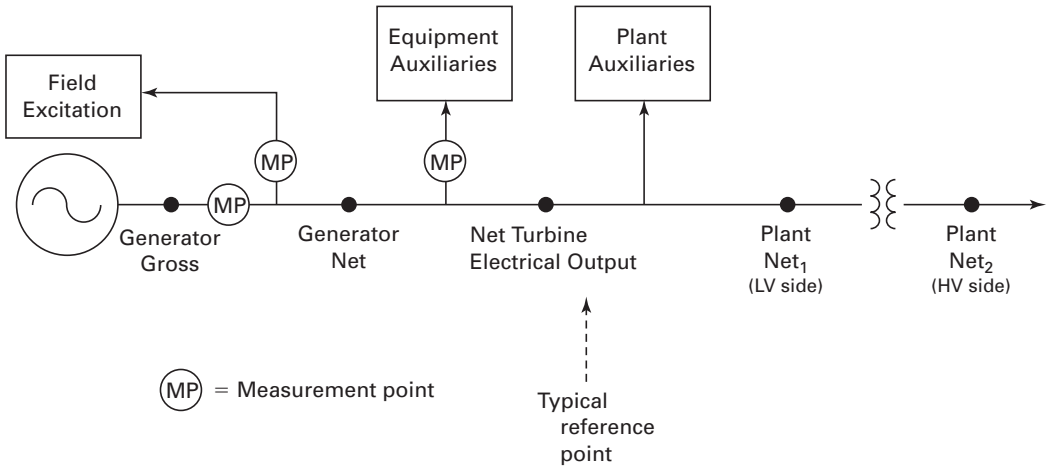

Fig. 3-1.3.2 Net Turbine Equipment Electrical Output

Copyright ASME International
Provided by IHS under license with ASME
No reproduction or networking permitted without license from IHS
Not for Resale

Table 3-1.3.5 Allowable Deviations

Variable	Allowable Deviation of the Test Mean From Reference
HP steam flow	±10%
HP steam temperature	±25°C (45°F)
HP steam flow capacity	±5%
Reheater system pressure drop	±8% of cold reheat pressure
Reheat temperature	±25°C (45°F)
Admission enthalpy	±15 kJ/kg (30 Btu/lb)
Admission/extraction flow	±3% of flow to following stage
Controlled admission/ extraction pressure	±5%
Exhaust pressure [Note (1)]	±2.0 kPa (0.6 in Hga) or ±5% of the absolute pressure, whichever is larger
HP section efficiency	±5%
HP section leak-off	±3% of HP steam flow
IP section flow capacity	±5%

GENERAL NOTE: In addition to the above limits on the deviations of individual variables, the combination of all deviations must be limited such that the following requirement of the corrections is satisfied:

$$\sum_{i=1}^{n} |\Delta_i| < 0.1 P_{ref}$$

where

$|\Delta_i|$ = the absolute value of the ith correction (kW)

P_{ref} = the reference turbine output (kW)

NOTE:

(1) If it is not practical to meet these criteria for exhaust pressure, the test may be conducted, and additional uncertainty for this deviation should be included in the uncertainty analysis. In any case, either party may require the exhaust pressure correction curve to be verified by test at a later date. If the correction is verified by later testing, the additional uncertainty should be eliminated.

3-2 TEST PLAN

A detailed test procedure must be prepared prior to conducting a Code test. It provides detailed procedures for performing the test. The test plan should include the schedule of test activities, responsibilities of the parties to the test, test procedures including corrections and sample calculations, and report of results. For a multiparty test, the test plan documents agreements on all issues affecting the conduct of the test and responsibilities of the parties to the test.

3-2.1 Schedule of Test Activities

A test schedule should be prepared that includes the sequence of events and anticipated time of test, test plan preparations, test preparation and conduct, and preparation of the report of results.

3-2.2 Multiparty Tests

If the test is a multiparty test, then the parties to the test should agree on individual responsibilities required to prepare, conduct, analyze, and report the test in accordance with this Code. This includes agreement on the organization of test personnel and designation of a test coordinator who will be responsible for the execution of the test in accordance with the test requirements. The test coordinator will also coordinate the setting of required operating conditions.

Representatives from each of the parties to the test should be designated to observe the test and confirm that it was conducted in accordance with the test requirements. They should also have the authority to approve any agreed-upon revisions to the test requirements during the test if it becomes necessary.

3-2.3 Timing of Commercial Test

An acceptance test of a new or modified machine should be scheduled as soon as practical after the turbine is first synchronized or as agreed to between the parties. Acceptance tests should be conducted if no serious operation difficulty has been experienced and there is reasonable assurance that the unit is free of deposits and undamaged. It is the intent, by conducting tests as soon as practical upon turbine first synchronization, that turbine performance is determined with no or minimal performance deterioration or damage to the turbine prior to testing.

3-2.4 Performance Benchmark Determinations

If a new or modified turbine, then a performance benchmark should be established as soon as benchmark test conditions can be achieved. As a minimum, enthalpy-drop testing is required. Additional methods for benchmarking the turbine performance include internal leakage tests and stage pressure measurements. This information may aid in the determination of turbine performance change.

3-2.4.1 Benchmark Enthalpy-Drop Test. For turbine sections operating in the superheated steam region (at least 15°C, 27°F SH), the turbine efficiency should be determined by measurement of the pressure and temperature of the steam entering and leaving the section. Unlike the intermediate-pressure turbine section, for which efficiency is substantially constant over a wide range of steam flow, the efficiency of a high-pressure section is affected by the position of the control valves. If the unit employs valves for control purposes, the measurements should be made with all control valves at a known and repeatable valve position (preferably at valves fully opened).

In opposed flow HP-IP sections, some of the steam entering the high-pressure turbine is throttled from the first stage of the high-pressure turbine into the intermediate-pressure turbine through an internal packing. Conventional measurement of intermediate-pressure section efficiency will yield an erroneously high value of efficiency. The amount of leakage flow must be known to accurately obtain the section efficiency. There

Copyright ASME International
Provided by IHS under license with ASME
No reproduction or networking permitted without license from IHS
Not for Resale

Table 3-2.4.2 Definition of Variables for Benchmark Testing

Reference	Test	Corrected	Definition
. . .	p'	p''	Stage pressure
p_{HP}	p'_{HP}	. . .	HP steam pressure
v_{HP}	v'_{HP}	. . .	HP steam pressure
$\dot{m}_i$	$\dot{m}'_i$	. . .	Σ (*inductions*) $-$ Σ (*extractions*) from the HP down to and including the stage at which p' is measured
$\dot{m}_{HP}$	$\dot{m}'_{HP}$	. . .	HP steam flow
T_{HRH}	T'_{HRH}	. . .	Hot reheat steam temperature (in absolute temperature scale of kelvin or Rankine)

are multiple methods that can be used to determine the leakage flow: an indirect method, where initial and reheat steam temperatures are varied to obtain data, and direct methods, where flow is measured in a bypass line around the blowdown valve. (See Appendix A for a description and discussion of the methods.) The section efficiencies of all turbine sections measured under these benchmark conditions may then be compared with results obtained per this Code during acceptance testing.

Low-pressure admission flows should be isolated during enthalpy-drop testing of the intermediate-pressure turbine section to eliminate its effect on intermediate-pressure exhaust temperature and pressure measurements and the subsequent determination of intermediate-pressure exhaust enthalpy and intermediate-pressure turbine efficiency.

3-2.4.2 Stage Pressure. During the initial (upon start-up) benchmark testing, any turbine stage pressures available for measurement should be obtained. These should include but may not be limited to throttle pressure, first-stage bowl or shell pressure, hot reheat pressure, and all stage extraction pressures.

For the stage pressures obtained during the subsequent benchmark testing (prior to acceptance testing), the measured pressures must be normalized to the initial benchmark conditions before comparisons can be made to the start-up benchmark stage pressures.

Any stage pressure ahead of the high-pressure exhaust point or all stage pressures in a nonreheat application may be corrected to reference conditions (normalized) using the following equation:

$$p'' = p' \times \frac{p_{HP}}{p'_{HP}} \times \frac{1 + \dfrac{\dot{m}_i}{\dot{m}_{HP}}}{1 + \dfrac{\dot{m}'_i}{\dot{m}'_{HP}}}$$

Any stage pressure at or following the reheat point may be corrected to reference conditions (normalized) using the following equation:

$$p'' = p' \times \frac{\sqrt{\dfrac{p_{HP}}{v_{HP}}}}{\sqrt{\dfrac{p'_{HP}}{v'_{HP}}}} \times \frac{1 + \dfrac{\dot{m}_i}{\dot{m}_{HP}}}{1 + \dfrac{\dot{m}'_i}{\dot{m}'_{HP}}} \times \frac{T_{HRH}}{T'_{HRH}}$$

See Table 3-2.4.2 for the definitions of variables for benchmark testing. If the stage pressure in question is the hot reheat pressure, $\dot{m}_i$ is equal to the sum of the IP induction flow and the reheat spray flow less any cold reheat process extractions.

3-2.4.3 Application of Benchmark Testing. Benchmark testing should be repeated prior to the acceptance test. A comparison shall be made between the benchmark tests to evaluate if there are any indicated changes in turbine performance. Indicated turbine performance changes shall be thoroughly evaluated prior to testing to determine if turbine performance deterioration has occurred.

When evaluating the indication of any degradation, the uncertainty of the relative change in indicated performance should be considered. If identical instrumentation and test points are used in each benchmark period, the uncertainty of the change in performance is equal to the square root sum of the squares of the random uncertainties of each test period plus the systematic contribution due to drift and hysteresis.

If the indicated degradation is greater than the uncertainty of the benchmark testing, a decision should be made to either run the test with commercial consideration to correct for degradation or to postpone testing pending remedial action.

3-3 PRELIMINARY TESTING

Preliminary testing should be conducted sufficiently in advance of the start of the performance test to allow time to calculate the preliminary results, make final adjustments, and modify the test requirements and/or test equipment. The results from the preliminary testing should be calculated and reviewed to identify any problems with the quantity and quality of measured data.

Some reasons for a preliminary run are to

(a) determine whether the plant equipment, including the steam turbine, is in suitable condition for the conduct of the test

(b) make adjustments, the needs of which were not evident during the preparation of the test

(c) check the operation of all instruments, controls, and data acquisition systems

Copyright ASME International
Provided by IHS under license with ASME
No reproduction or networking permitted without license from IHS
Not for Resale

(d) ensure that the target test uncertainty can be obtained by checking the complete system

(e) ensure that the facilities operation can be maintained in a steady state performance

(f) ensure that all flows are within permissible limits and that steady state flow can be maintained to avoid interrupting the test

(g) ensure that process boundary inputs and outputs are not constrained other than those identified in the test requirements

(h) familiarize test personnel with their assignments

(i) retrieve enough data to fine-tune the control system if necessary

3-4 ISOLATION OF THE CYCLE

3-4.1 General

The purpose of cycle isolation is to ensure that measured parameters accurately reflect conditions crossing the test boundary and to verify that equipment in test is not being bypassed. Extraneous flows should be isolated from the system, if possible, to eliminate measurement errors. If there is any doubt about the ability to isolate extraneous flows during the test, preparations shall be made prior to the test to measure these flows. The equipment and flows to be isolated and the methods to accomplish this should be outlined during the engineering phase of the project.

3-4.2 Unaccounted-for Flow Leakage

When the system is properly isolated for the performance test, the unaccounted-for leakage should be less than 0.25% of the total flow into the HRSG. Excessive unaccounted-for leakage shall be eliminated before continuing the test. Water storage in the condenser hotwell, deaerator, boiler drum(s), and any other storage points within the cycle are to be taken into account.

3-4.3 Unaccounted-for Flow Correction Distribution

Unaccounted-for flow will be assigned as leakages from the various sections of the HRSG on a flow-weighted basis.

3-4.4 Flows That Shall Be Isolated

The following list includes items of equipment and extraneous flows that shall be isolated:

(a) large volume storage tanks (if the use of process flows and injection streams will allow conduct of a test of sufficient length).

(b) makeup water (if the use of process flows and injection streams will allow conduct of a test of sufficient length).

(c) bypass steam and auxiliary steam lines for starting.

(d) bypass lines of primary flow-measuring devices.

(e) drain lines on stop and control valves.

(f) interconnecting lines to other units.

(g) demineralizing equipment. Isolation of demineralizing equipment does not necessarily mean removing the equipment from the cycle. It does, however, mean that all ties with other units must be isolated and such things as recirculating lines that affect the primary flow measurement must be isolated or the flows measured.

(h) chemical-feed equipment using condensate.

(i) steam generator fill lines.

(j) steam generator vents and drains.

(k) drain lines on main steam, reheat, and induction/extraction.

(l) hogging jets.

(m) condenser water-box priming jets.

(n) steam or water lines for station heating.

(o) steam generator blowdowns.

3-4.5 Flows That Shall Be Isolated, Measured, or Calculated From Other Measurements

Extraneous flows that enter or leave the test boundary in such manner that, if ignored, will cause an error in the flows through the turbine, shall be isolated, measured, or calculated from other measurements. Typically such flows are the following:

(a) cogeneration process steam flow and condensate return

(b) large volume storage tanks (if the use of process flows and injection streams does not permit isolation)

(c) makeup water (if the use of process flows and injection streams does not permit isolation)

(d) steam or water injection for power augmentation or emissions control

(e) process makeup water

(f) desuperheating spray flow

(g) feedwater pump minimum flow lines and balance drum flows

(h) turbine hood sprays

(i) auxiliary steam to the steam-seal regulating valve

(j) steam, other than packing leak-off steam, to the steam-seal regulating valve

(k) pegging and sparging steam to the deaerator

(l) deaerator vents

(m) water leakage into any water-sealed flanges, such as water-sealed vacuum breakers

(n) pump-seal leakage leaving the cycle

(o) continuous drains from wet steam turbine casing and connection lines

(p) water and steam-sampling equipment

3-4.6 Calculated Flows

It may be necessary to calculate shaft packing, valve stem leakage, internal turbine leakage, and turbine drain flows based on design values.

Copyright ASME International
Provided by IHS under license with ASME
No reproduction or networking permitted without license from IHS
Not for Resale

3-4.7 Methods of Isolating

The following methods are suggested for isolating or verifying isolation of equipment and extraneous flows from the test boundary:

(a) double valves and telltales (or a loosened flange)
(b) temperature indication
(c) blank flanges
(d) blank between two flanges
(e) removal of spool piece
(f) visual inspection for steam blowing to atmosphere from such sources as safety valves and valve stem packings
(g) acoustic techniques

3-4.8 Resolution of Cycle Leakages Within the Cycle

Any leakages identified by the methods of para. 3-4.7 must either be eliminated or quantified and accounted for.

3-5 CONDUCT OF TEST

This subsection provides guidelines on the actual conduct of the performance test and addresses the following areas:

(a) recommended test modes (para. 3-5.1)
(b) starting and stopping tests and test runs (para. 3-5.2)
(c) testing conditions (para. 3-5.3)
(d) adjustments prior to and during tests (para. 3-5.4)
(e) duration of runs, number of test runs, evaluation of test runs, and number of readings (para. 3-5.5)

3-5.1 Recommended Test Modes

Turbine control valves shall be operated in a manner consistent with the reference case. For example, if the reference case is based on a valves-wide-open condition, then testing shall take place at that condition. If the turbine employs control valves and is operating in controlled pressure operation, tests should be conducted at valve point(s) closest to reference conditions if the reference conditions are on the valves best-point basis. Duplicate test runs should be performed. The turbine load should be changed by a minimum of 10% for a minimum 30-min period and then reestablished between duplicate test runs. Cycle isolation should be broken and operation returned to routine mode between consecutive test runs.

3-5.2 Starting and Stopping Tests and Test Runs

The test coordinator is responsible for declaring the start and end of the test and ensuring that all data collection begins at the start of the test and continues for the full duration of the test.

3-5.2.1 Starting Criteria. Prior to starting each performance test, the following conditions shall be satisfied:

(a) Operation, configuration, and disposition for testing in accordance with the agreed-upon test requirements, including
(1) equipment operation and method of control
(2) turbine configuration
(3) valve lineup and auxiliary equipment status
(4) turbine operation meeting the allowable deviations of Table 3-1.3.5.

(b) Stabilization. Prior to starting test, the plant must be operated for a sufficient period of time at test load to demonstrate and verify stability in accordance with para. 3-5.3 criteria.

(c) Data Collection. Data acquisition systems are functioning and test personnel are in place and ready to collect samples or record data.

3-5.2.2 Stopping Criteria. Tests are normally stopped when the test coordinator is satisfied that requirements for a complete test run have been met. The test coordinator should verify that the methods of operation during test, as specified in para. 3-5.3, have been met. The test coordinator may extend or terminate the test if the requirements are not met.

Data logging should be checked to ensure completeness and quality. After all test runs are completed, the plant isolation should be returned to a normal operating mode.

3-5.3 Testing Conditions

3-5.3.1 Test Stabilization. Prior to any test run, the turbine and all associated equipment shall be operated for a sufficient time to attain steady state condition. Steady state conditions shall be obtained when the criteria of paras. 3-5.3.2 and 3-5.3.7 have been met.

3-5.3.2 Operating Conditions. Every effort should be made to run the tests under specified operating conditions or as close to specified operating conditions as possible to minimize the magnitude of corrections. Table 3-1.3.5 provides guidelines on the allowable deviations in operating conditions from the reference condition. These guidelines are based on the analytical uncertainty of the correction methodology and should not be exceeded. Operating conditions should be as constant as practical before the test begins and shall be maintained throughout the test. Steam generator and turbine controls shall be fine-tuned prior to the test to minimize deviation of variables. Parameter variations within a test run must be minimized such that the total uncertainty of the test is consistent with the code requirements. These key operating conditions include flow, pressure and temperature of primary thermal energy input/output, exhaust pressure, and output.

3-5.3.3 Turbine Operation. The turbine and its cycle shall be in normal operation during the test, except for cycle isolation, as given in subsection 3-4. No spe-

Copyright ASME International
Provided by IHS under license with ASME
No reproduction or networking permitted without license from IHS
Not for Resale

cial adjustments shall be made to the turbine that are inappropriate for continuous operation.

3-5.3.4 Turbine Shaft-Sealing Systems. The turbine shaft-sealing system, if controlled, shall be adjusted to normal operating conditions during the test, and any flow outward or inward that will influence test results shall be measured.

3-5.3.5 Turbine Speed. The turbine shall be operated within the manufacturer's range of allowable operating conditions.

3-5.3.6 Valve Positions. Nozzle, bypass, extraction, and secondary flow valves to or from the turbine, if provided, shall be in the position required by the performance specification.

3-5.3.7 Constancy of Test Conditions. If variations are observed during the test run, the cause shall be eliminated and the test continued, if possible, until all variables are within the specified limits for the planned duration of the test run.

If the cause of the variation cannot be eliminated during the test run, or if excessive variations are discovered during computation of results from a completed test run, the resulting impact of the variation on test uncertainty shall be evaluated. If the random variations cause the test uncertainty to exceed code limits, the run shall be rejected in whole or part and repeated as necessary after the cause of the variations has been eliminated.

Any rejected portions of the test run shall not be used in computing the overall averages. The results of that test run will then be deemed acceptable provided

(a) consecutive valid periods aggregate to 95% or more of the individual test run duration

(b) quantity of readings obtained during the valid portion of the test is sufficient to produce a test uncertainty consistent with the requirements of this Code

(c) selected time periods do not include generation changes, level changes, or any integrated data from any part of the invalid periods

3-5.4 Adjustments Prior to and During Tests

This paragraph describes the following three types of adjustments related to the test:

(a) permissible adjustments during stabilization periods between test runs

(b) permissible adjustments during test runs

(c) nonpermissible adjustments

3-5.4.1 Permissible Adjustments During Stabilization Periods Between Test Runs. Acceptable adjustments prior to the test may be made to the equipment and/or operating conditions within the manufacturer's recommended operating guidelines. Stability may need to be established following any adjustment. Typical adjustments prior to tests are those required to correct malfunctioning controls or instrumentation or to optimize plant performance for current operating conditions. Recalibration of suspected instrumentation or measurement loops are permissible. Adjustments to avoid corrections or to minimize the magnitude of performance corrections are permissible. A specific example may be to adjust exhaust pressure. This may possibly be done by reducing cooling capacity, bleeding air into the suction of the air removal equipment, or removing some air removal equipment from service. Hotwell conductivity should be closely monitored if these adjustments are made.

3-5.4.2 Permissible Adjustments During Test Runs. Permissible adjustments during tests are those required to correct malfunctioning controls, maintain equipment in safe operation, or to maintain plant stability. Adjustments are only permitted provided that the deviation and stability criteria of paras. 3-1.3.5 and 3-5.3.2 are met. Switching from automatic to manual control and adjusting operating limits or set points of instruments or equipment should be avoided during a test.

3-5.4.3 Nonpermissible Adjustments. Any adjustments that would result in equipment being operated beyond the manufacturer's operating, design, or safety limits and/or specified operating limits are not permitted. Adjustments or recalibrations that would adversely affect the stability of a primary measurement during a test are also not permitted.

3-5.5 Duration of Runs, Number of Test Runs, Evaluation of Test Runs, and Number of Readings

3-5.5.1 Duration of Runs. This Code requires a minimum continuous steady state test run of the longest of the following:

(a) 1 hr

(b) as required to obtain a sufficient number of measurements to attain the required test uncertainty

(c) as long as the period that corresponds to N_R from Fig. 3-5.5.1

N_R is the required number of readings whose average scatter will affect the test results by an uncertainty no larger than 0.05%. Table 3-5.5.1 contains the percentage coefficients to be used to calculate Z, the abscissa on Fig. 3-5.5.1 (from ASME PTC 6-1996).

3-5.5.2 Number of Test Runs. A test run is a complete set of observations with the turbine at stable operating conditions. A test is the average of a series of test runs. This Code requires that a minimum of two valid test runs be used as the basis of the test and recommends that three test runs be conducted. Conducting multiple test runs

(a) provides a valid method of rejecting bad test runs.

(b) verifies the repeatability of the results. Results may not be repeatable due to variations in either test methodology (test variations) or the actual performance of the equipment being tested (process variations).

Copyright ASME International
Provided by IHS under license with ASME
No reproduction or networking permitted without license from IHS Not for Resale

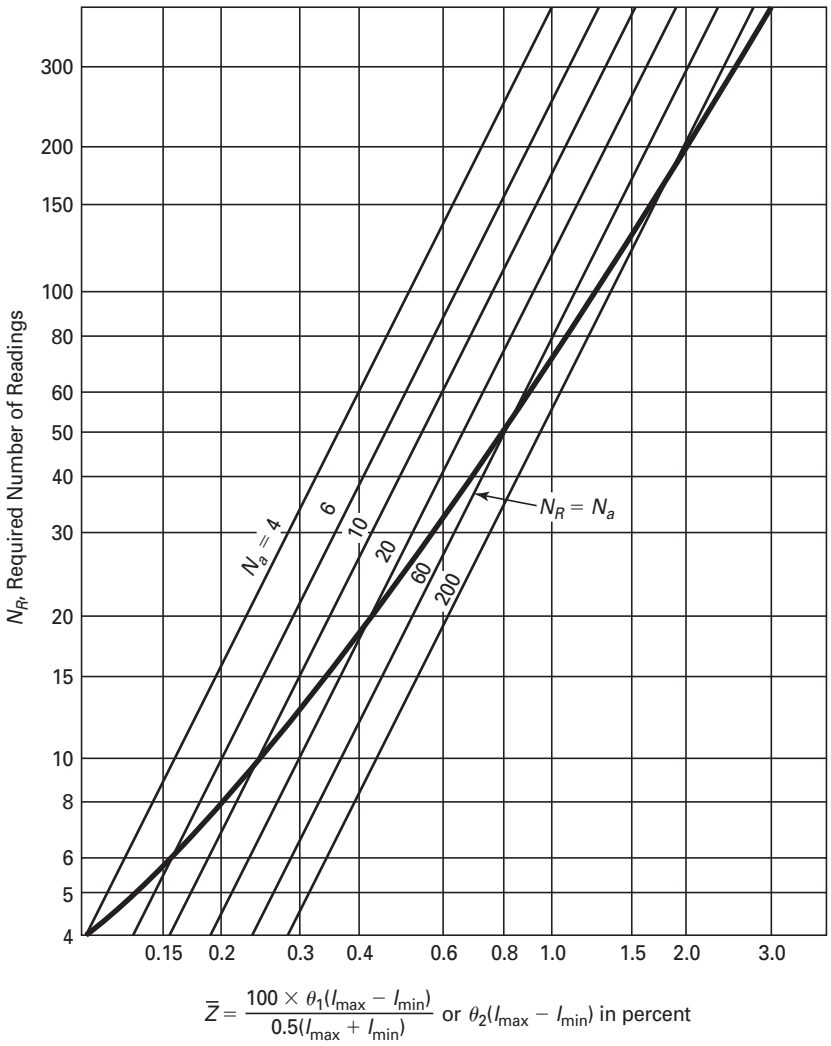

Fig. 3-5.5.1 Required Number of Readings

3-5.5.3 Evaluation of Test Runs. When comparing results from two test runs (X_1 and X_2) and their uncertainty intervals, the three cases shown in Fig. 3-5.5.3 (from ASME PTC 46) should be considered.

(a) Case 1. A problem clearly exists when there is no overlap between uncertainty intervals. This situation may be due to uncertainty intervals being grossly underestimated, errors in the measurements, or abnormal fluctuations in the measurement values. Investigation to identify bad readings, overlooked or underestimated systematic uncertainty, and such is necessary to resolve this discrepancy.

(b) Case 2. When the uncertainty intervals completely overlap, as in this case, one can be confident that there has been a proper accounting of all major uncertainty components. The smaller uncertainty interval, $X_2 \pm U_2$, is wholly contained in the interval, $X_1 \pm U_1$.

(c) Case 3. This case, where a partial overlap of the uncertainty exists, is the most difficult to analyze. For both test run results and both uncertainty intervals to be correct, the most probable value lies in the region where the uncertainty intervals overlap. Consequently, the larger the overlap the more confidence there is in the validity of the measurements and the estimate of the uncertainty intervals. As the difference between the two measurements increases, the overlap region shrinks.

Should a run or set of runs be a case 1 or case 3, the results from all of the runs should be reviewed in an attempt to explain the reason for excessive variation. Should no reason become obvious, the user of the Code should reevaluate the uncertainty band or conduct more test runs to calculate the precision component of uncertainty directly from the test results. Conducting additional tests may also validate the previous testing.

The results of valid runs shall be averaged to determine the mean result. The uncertainty of result is calculated in accordance with ASME PTC 19.1.

Copyright ASME International
Provided by IHS under license with ASME
No reproduction or networking permitted without license from IHS
Not for Resale

Table 3-5.5.1 Definitions and Notes for Fig. 3-5.5.1

(A) θ_1, θ_2 Influence Factors for Calculations $\bar{Z}$, the Abscissa of Fig. 3-5.5.1

NOTES:
(1) θ_1 is expressed as percent effect per percent of instrument reading.
(2) θ_2 is expressed as percent effect per unit of instrument reading.
(3) θ_1', θ_2' are the slopes of the correction-factor curves.
(4) θ_1'' or θ_2'' are used to take into account the effect of the instrument-reading range for fluctuation in measurements used to establish any enthalpy appearing in the heat rate equation. For θ_1'' or θ_2'' values, use the applicable Figs. 7.2, 7.3, 7.4 or 7.5 in ASME PTC 6 after converting the ordinate to percentage effect per percent of absolute pressure or absolute temperature for θ_1'' or percent effect per unit of reading for θ_2''.

Type of Data	θ_1	θ_2
(1) Power	1.0	. . .
(2) Flow by Volumetric Weigh Tanks	1.0	. . .
(3) Flow by Flow-Nozzle Differentials	0.5	. . .
(4) Steam Pressure and Temperature	$\theta_1' + \theta_1''$	$\theta_2' + \theta_2''$
(5) Feedwater Temperature	. . .	θ_2''
(6) Exhaust Pressure	θ_1'	θ_2'

(B) For Combining Types of Data

Type of Data	Combined
(1) Average of n columns of similar readings such as four exhaust-pressure taps	$\bar{Z}_n = \dfrac{\sqrt{\sum \dfrac{\bar{Z}_i^2}{n}}}{\sqrt{n}} = \dfrac{1}{n}\sqrt{\Sigma \bar{Z}_i^2}$
(2) Total effect of m types of readings with the same time interval between readings, such as load and flow, or pressure and temperature	$\bar{Z}_m = \sqrt{\Sigma \bar{Z}_n^2}$

NOTES:
(1) $\bar{Z}$ is the percentage effect the instrument readings range (maximum reading − minimum reading) has on the test results.
(2) Subscript i refers to columns of individual measurements.

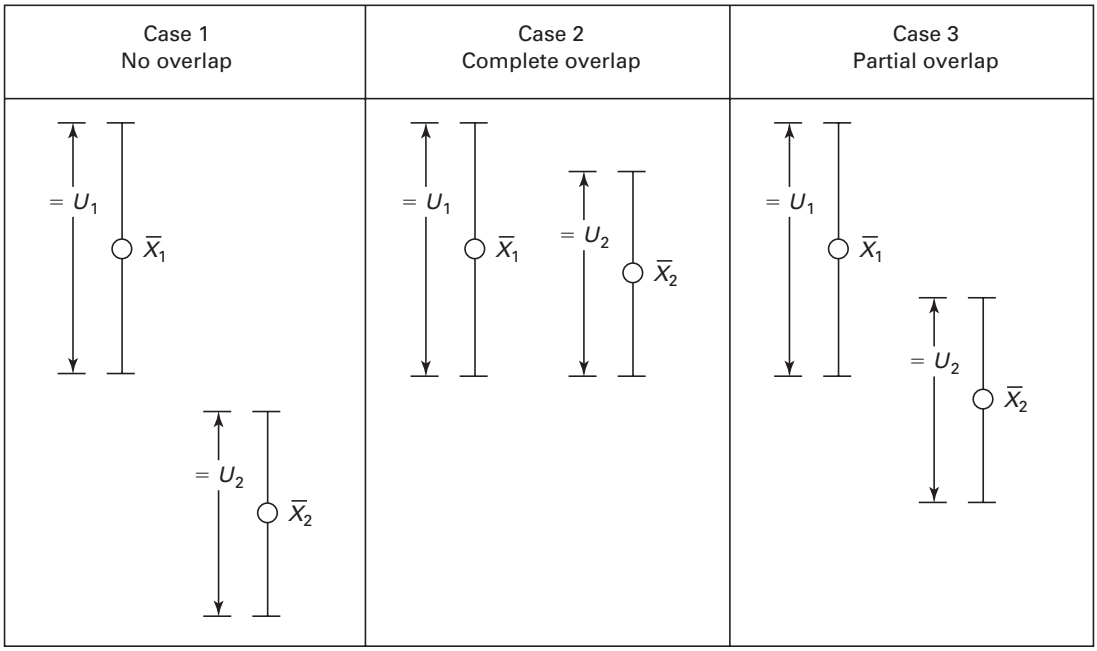

Fig. 3-5.5.3 Uncertainty Intervals

Copyright ASME International
Provided by IHS under license with ASME
No reproduction or networking permitted without license from IHS
Not for Resale

3-5.5.4 Number of Readings. Sufficient readings must be taken, within the test duration, to meet the 0.05% effect of scatter on the test result criteria set forth in para. 3-5.5.1. Parameters and variables should be recorded at the following minimum frequencies:

(a) differential pressure for flow measurements (including associated pressures and temperatures for density compensation): once per minute.

(b) nonintegrated power measurements: once per minute; for integrated power measurement readings, readings should be obtained at intervals of no more than 10 min throughout the entire test run period. Rotating watt-hour meters must be read for a minimum of 2 min out of every 5 min throughout the period of the test run.

(c) cycle pressures, temperatures, and power factor measurements: once every 5 min.

(d) integrated measurements: once every 10 min, including power or level changes.

(e) secondary variables: at least once every 15 min.

3-6 CALCULATION AND REPORTING OF RESULTS

The data taken during the test should be reviewed and rejected in part or whole if not in compliance with the requirements for the constancy of test conditions (see para. 3-5.3.7). Each code test shall include pretest and post-test uncertainty analyses.

3-6.1 Data Reduction

The results for a given test run should be based on the average of valid test data; para. 3-6.2 provides guidance on the validity of test data. The results for the test should be based on the numerical average of valid test runs; para. 3-5.5.3 provides guidance on the determination of valid test runs.

3-6.2 Rejection of Readings

Upon completion of test or during the test itself, the test data shall be reviewed to determine if data from certain time periods should be rejected prior to the calculation of test results. Refer to ASME PTC 19.1 and ASME MFC-2M (Appendix 3) for data rejection criteria. Should serious inconsistencies that affect the results be detected during a test run or during the calculation of the results, the run shall be invalidated completely or it may be invalidated only in part if the affected part is at the beginning or end of the run. A run that has been invalidated shall be repeated, if necessary, to attain the test objectives.

During the test, should any control system set points be modified that affect stability of operation beyond Code allowable limits, test data shall be considered for rejection from the calculations of test results.

An outlier analysis of spurious data should also be performed in accordance with ASME PTC 19.1 or Appendix 3 of ASME MFC-2M on all primary measurements after the test has ended. This analysis will highlight any other data that should be rejected prior to calculating the test results. There may be cases where it is appropriate to reject a subset of parameter data without rejecting the entire time period.

3-6.3 Corrections

Corrections should be applied to test run results for any deviations of the test conditions from the reference conditions. Correction factors may be in the form of algebraic equations, curves, or tabular values. The method of generating correction formulations and applying corrections to test results shall be in accordance with Section 5. Corrections shall be limited such that they shall not correct a condition that is outside of the manufacturer's operating limits.

3-6.4 Test Uncertainty

Test uncertainty is a measurement of the quality and resulting accuracy of the test. (ASME Performance Test Codes do not address test tolerance or other commercial issues such as margin or allowance.)

Procedures relating to test uncertainty are based on concepts and methods described in ASME PTC 19.1, Test Uncertainty. ASME PTC 19.1 specifies procedures for evaluating measurement uncertainties from both random and systematic errors and the effects of these errors on the uncertainty of a test result. This Code addresses test uncertainty in the following four sections:

(a) Section 1 defines expected test uncertainties.

(b) Section 3 describes the uncertainty required for each test measurement.

(c) Section 3 defines the requirements for pretest and post-test uncertainty analyses and how they are used in the test.

(d) Section 5 and Nonmandatory Appendix B provide applicable guidance for determining pretest and post-test uncertainty analysis results.

3-6.4.1 Required Uncertainty of Test Measurements. Instrumentation for a code test shall meet the minimum uncertainty requirements shown in Table 3-6.4.1. These uncertainty limits include both the systematic and random components. Exceeding the upper limit of any parameter uncertainty requirement is allowable only if it is demonstrated that the selection of all instrumentation will result in an overall test uncertainty equal to or less than what it would have been had all parameter uncertainty requirements been followed.

3-6.4.2 Pretest and Post-Test Uncertainty Analyses. A pretest uncertainty analysis shall be performed to determine if the test has been designed to meet Code re-

Copyright ASME International
Provided by IHS under license with ASME
No reproduction or networking permitted without license from IHS
Not for Resale

Table 3-6.4.1 Allowable Uncertainty

Measurement	Allowable Uncertainty	Notes
Net turbine electrical output	0.25%	. . .
Main steam flow rate	0.40%	Sensitivity > 0.5
Intermediate energy steam flow rate	0.75%	Sensitivity > 0.2 and < 0.5
Lower energy steam flow rate	1.50%	Sensitivity < 0.2
Class 1 pressure (gage and absolute)	0.30%	Requires 0.1% or better accuracy class transmitter with temperature compensation
Class 1 differential pressure	0.30%	Requires 0.1% or better accuracy class transmitter with temperature compensation
Class 1 turbine exhaust pressure	0.35 kPa (0.1 in. HgA) (0.05 psia)	Requires 0.1% or better accuracy class transmitter with temperature compensation
Class 1 temperature	0.28°C (0.5°F)	Temperatures < 93°C (200°F)
Class 1 temperature	0.56°C (1.0°F)	Temperatures > 93°C (200°F)
Class 2 pressure (gage and absolute)	1.00%	Requires 0.25% or better accuracy class transmitter
Class 2 differential pressure	1.00%	Requires 0.25% or better accuracy class transmitter
Class 2 temperature	1.67°C (3.0°F)	. . .
Secondary pressure	2.00%	Requires 1% or better accuracy class transmitter
Secondary differential pressure	2.00%	Requires 1% or better accuracy class transmitter
Secondary temperatures	3.89°C (7.0°F)	. . .

GENERAL NOTE: Class 1 and Class 2 are defined in para. 4-1.2.3.

quirements. Estimates of systematic and random error for each of the proposed test measurements should be used to help determine the number and quality of test instruments required for compliance with the Code. Also, a pretest uncertainty analysis can be used to determine the correction factors, which are significant to the corrected test results, and should be used to determine the level of accuracy required for each measurement to maintain overall Code standards for the test.

A post-test uncertainty analysis shall also be performed as part of a Code test. The post-test uncertainty analysis will reveal the actual quality of the test to determine whether the expected test uncertainty described in Section 1 has been realized.

3-6.5 Data Distribution and Test Report

All data shall be distributed at the conclusion of the test. Data will be distributed, by the test coordinator, in a format and manner agreed to prior to testing. A test report should be written in accordance with Section 6 of this Code by the test coordinator and distributed.

3-6.6 Thermodynamic Properties

The ASME Steam Tables or ASME-approved formulations that correspond to the reference conditions should be used to calculate results. If the basis for the reference properties is unclear or ambiguous, then the latest version of the steam tables should be used.

Copyright ASME International
Provided by IHS under license with ASME
No reproduction or networking permitted without license from IHS
Not for Resale

Section 4
Instruments and Methods of Measurement

4-1 GENERAL REQUIREMENTS

4-1.1 Introduction

This Code presents the mandatory provisions for instrumentation used in the implementation of an ASME PTC 6.2 test. Per the philosophy of ASME Performance Test Codes (as given in ASME PTC 1) and subsection 1-1, it does so in consideration of the minimum reasonably achievable uncertainty.

The Instruments and Apparatus Supplements of the Performance Test Codes (ASME PTC 19 series) contain details concerning instrumentation and the governing requirements of instrumentation as applied to an ASME Code performance test. The user of this Code must be intimately familiar with ASME PTC 19.1, PTC 19.2, PTC 19.3, PTC 19.5, and PTC 19.22 as applicable to the instrumentation specified and explained in this Section.

For the convenience of the user, this Section reviews the critical highlights of portions of those Supplements that directly apply to the requirements of this Code. Note that only a small fraction of the instrumentation covered in the referenced Supplements is typically used for an ASME PTC 6.2 test.

This Section also contains details of the instrumentation requirements of this Code that are not specifically addressed in the referenced Supplements. Such details include classification of data for the purpose of instrumentation selection and maintenance, field calibration recommendations once instrumentation is removed from a laboratory, calibration requirements specific to an ASME PTC 6.2 Code test, electrical metering, and other information.

If the requirements in the Instrument and Apparatus Supplements become more rigorous as they are updated, their requirements will supersede those set forth in this Code.

SI units are shown in all equations in this Section. However, any other consistent set of units may be used.

4-1.2 Criteria for Selection of Instrumentation

4-1.2.1 Parameters and Variables. A parameter is a physical quantity at a location that is sensed by the direct measurement of a single instrument or determined by the averaged measurements of several similar instruments. In the latter case, several instruments are used to determine a parameter that has potential to display spatial gradient qualities, such as pressure at the turbine exhaust. Similarly, multiple instruments may be used to determine a parameter to reduce test uncertainty, such as use of two temperature measurements of the fluid in a pipe in the same plane.

Typical parameters measured in an ASME PTC 6.2 Code test are temperature and pressure. Note that the terms parameter and variable are sometimes used interchangeably in the industry and in some other ASME Codes. This Code distinguishes between the two terms.

A variable is an unknown quantity in an algebraic equation that must be determined. The performance equations in Section 5 contain the variables used to calculate the resulting corrected power output performance of a steam turbine in a combined cycle. Typical variables in these equations are flow, enthalpy, correction factors, and power. Each variable can be thought of as an intermediate result needed to determine the power output performance.

Parameters are the quantities measured directly to determine the value of the variables needed to calculate the corrected power per the equations in Section 5. Examples of parameters are temperature and pressure to determine enthalpy and temperature, pressure, and differential pressure for the calculation of flow.

4-1.2.2 Instrumentation Classification. The method used to measure or to determine a parameter, including accuracy requirements and validation of the instrumentation, depends on how an error in that parameter affects the final test result. Parameters measured or determined are classified as either primary or secondary.

Instrumentation is categorized as Class 1 or Class 2, depending on the instrumentation requirements defined by that parameter.

4-1.2.3 Primary Parameters and Primary Variables. The variables in the turbine performance equations in Section 5 used to calculate test results are called primary variables. Typical locations for instrumentation used to measure primary variables are shown in Figs. 4-1.2.3-1 and 4-1.2.3-2.

The primary variables are further classified as Class 1 primary variables or Class 2 primary variables. Class 1 primary variables are defined as those that have a relative sensitivity coefficient of 0.2 or greater. The instrumentation used to measure the parameters needed to determine Class 1 primary variables requires higher accuracy instruments with more redundancy than instrumentation to measure parameters needed to calculate

Copyright ASME International
Provided by IHS under license with ASME
No reproduction or networking permitted without license from IHS
Not for Resale

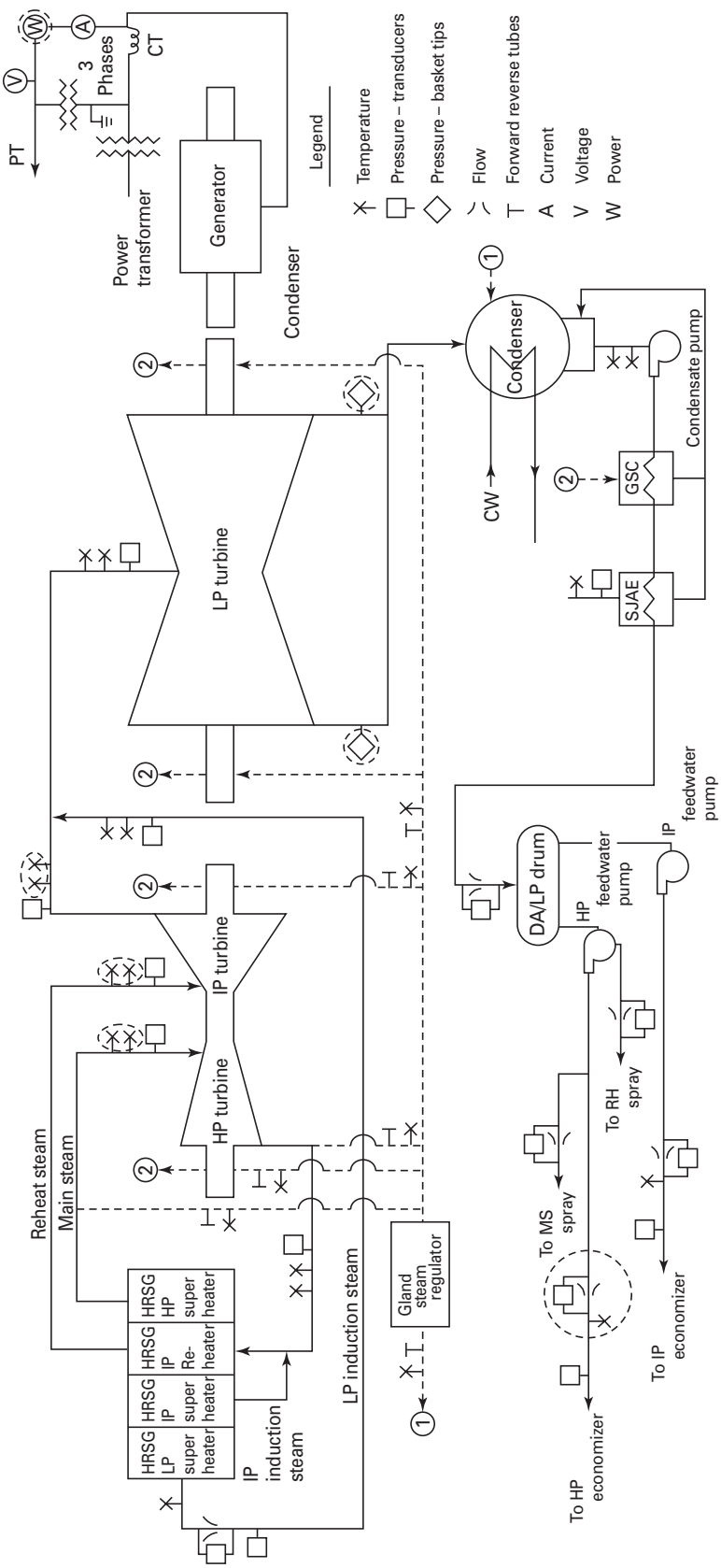

GENERAL NOTE: Instrumentation shown in ◯ must be designed, manufactured, and installed per ASME requirements and calibrated traceable to NIST standards.

Fig. 4-1.2.3-1 Location and Type of Test Instrumentation for Combined Cycle (Triple Pressure HP/IP-LP Reheat Steam Turbine) Test Procedure

Copyright ASME International
Provided by IHS under license with ASME
No reproduction or networking permitted without license from IHS
Not for Resale

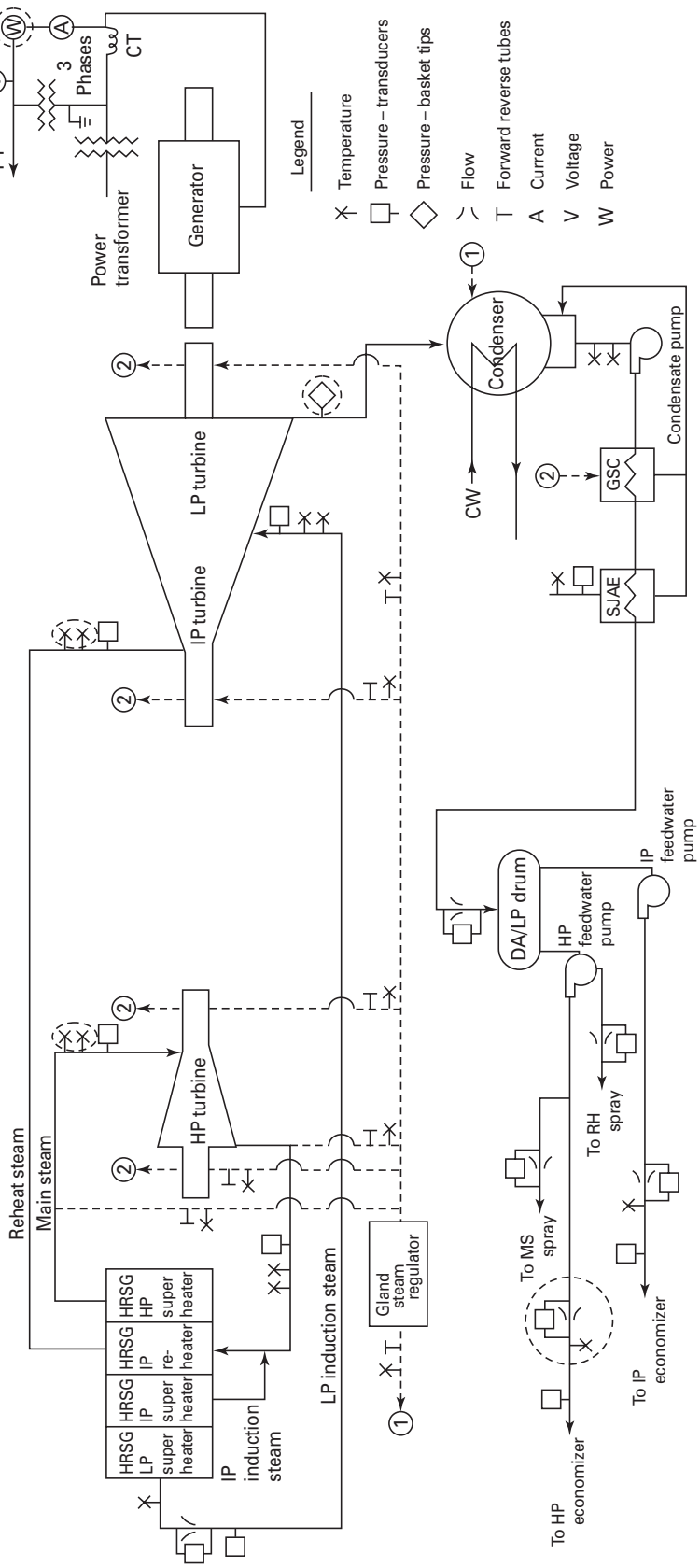

GENERAL NOTE: Instrumentation shown in ( ) must be designed, manufactured, and installed per ASME requirements and calibrated traceable to NIST standards.

Fig. 4-1.2.3-2 Location and Type of Test Instrumentation for Combined Cycle (Triple Pressure HP-IP/LP Reheat Steam Turbine) Test Procedure

Copyright ASME International
Provided by IHS under license with ASME
No reproduction or networking permitted without license from IHS
Not for Resale

Class 2 primary variables, which have a relative sensitivity coefficient of less than 0.2%.

4-1.2.4 Secondary Parameters and Secondary Variables. Parameters that are determined but do not enter into the calculation of the results are called secondary parameters. These parameters are determined throughout a test period to ensure that the required test condition is not violated. For example, bypass temperatures, needed to ensure that there is no leakage through bypass valves, are usually recorded but are not used in the calculations.

4-1.2.5 Class 1 and Class 2 Instrumentation. Class 1 instrumentation must be used to determine Class 1 primary parameters. Class 2 instrumentation may be used for Class 2 primary parameters and all secondary parameters. Class 1 instrumentation requires special laboratory calibration and/or must meet specific manufacturing and installation requirements, as specified in the ASME PTC 19 series. Class 2 instrumentation does not require laboratory calibration other than that performed in the factory for certification, but it does require field verification by techniques described herein.

4-1.3 Calibration and Field Verification

4-1.3.1 Definition of Calibration. Calibration is the process of characterizing the performance of an instrument over the range of expected operation against a reference standard having requirements as defined in para. 4-1.3.2. In the case of flow metering, calibration refers to passing a known flow through the metering run, as determined in special facilities for such practice.

4-1.3.2 Laboratory Calibration. Laboratory calibration, as defined by this Code, is performed under very controlled indoor conditions with highly specialized laboratory equipment that meets the 25% rule, or its alternate, as described in para. 4-1.3.6. Class 1 instrumentation shall be laboratory calibrated.

Reference standards for hydraulic calibrations are those associated with the static-weigh tank method of flow determination. As such, a signature curve of flow characteristics specific to each meter is determined.

4-1.3.3 Field Calibration. Field calibration is not necessarily as rigorous as calibration in a laboratory facility specifically equipped with the requisite equipment. However, it is adequate in all cases to determine if instrumentation that has been used for many cycles or that has not been laboratory calibrated for an extensive period of time has been damaged or has experienced unacceptable drift. Field calibration is further described in para. 4-1.3.7.

4-1.3.4 Application of Calibration Results. Readings are taken from both the candidate instrument and the reference standard. If the deviation is large enough, the output of the instrument then may be adjusted to the standard reading. As an alternative, the deviation between the instrument and the reference standard may be applied to the instrument reading.

In the case of calibrated flow metering, the deviation of a discharge coefficient from the empirical formulation may be applied by curve fitting through the calibration data points as detailed more thoroughly in ASME PTC 19.5.

It is noted that a significant amount of instrumentation used in power plant performance testing for Class 1 instrumentation is of an accuracy class such that application of the differences between the laboratory reference standard and the instrument reading is insignificant in terms of the effect on calculated results.

4-1.3.5 Reference Standards. In general, Class 1 and Class 2 instrumentation used for primary variables (except flow-metering runs) must be calibrated against reference standards with measurements traceable to the National Institute of Standards and Technology (NIST) or another recognized international standard organization. All reference standards shall be calibrated as specified by the manufacturer or at another frequency for which the user has data to support extension of the calibration period. Supporting data are historical calibration data that demonstrate a calibration drift less than the accuracy of the reference standard for the desired calibration period. Flow-metering calibration is discussed further in para. 4-4.1.6.

4-1.3.6 Instrument Calibration Accuracy and Reference Standards. Instrument calibration accuracy is the repeatable maximum accuracy of a properly adjusted, or zeroed, instrument that is expected in a laboratory bench environment without vibration or other installation effects, electromagnetic effects, external temperature effects, or in some cases even static temperature effects.

The analogy in flow metering is the accuracy of an empirical equation for the discharge coefficient when the meter is manufactured and installed as specified by ASME PTC 19.5 (see para. 4-4.1.4). The flow meter calibration accuracy is exclusive of the added uncertainty caused by the process and differential pressure measurements as well as geometric measurements.

For a meaningful calibration curve to be developed for application as described in para. 4-1.3.4, if necessary, the reference standards should have an uncertainty of at most 25% of the calibration accuracy of the test instrument to be calibrated. As an alternative, a reference standard with a higher uncertainty may be used if the uncertainty of the standard combined with the precision uncertainty of the instrument being calibrated is less than the accuracy requirement of the instrument.

In flow metering in this Code, the 25% rule cannot be achieved. Curve fitting from calibration is achievable from a 20-point calibration in a lab with an uncertainty of approximately 0.2% due to the curve fit (see Mandatory Appendix II).

--`,,```,,,,````-`-`,,`,,`,`,,`---

Copyright ASME International
Provided by IHS under license with ASME
No reproduction or networking permitted without license from IHS Not for Resale

4-1.3.7 Field Calibration Techniques. Field calibration or field checks may be performed numerous ways. Portable devices for both temperature and pressure calibration of instrumentation as defined in para. 4-1.3.1 are available with traceable uncertainties less than the installed uncertainties of most of current classes of laboratory-calibrated Class 1 instrumentation. It is acceptable to use such devices to ensure that there has been no unacceptable drift or damage to instrumentation to validate acceptability for test use. If the drift is not acceptable, the instrument may be repaired, replaced, or the field calibration may be applied.

Field calibration can also include checking against a laboratory-calibrated instrument, rather than a portable calibration device, of the same magnitude uncertainty. Field calibration must also include loop checks as defined in para. 4-1.3.12 if the instrumentation is analog based.

4-1.3.8 Number of Calibration Points. The number of calibration points depends on the classification of the parameter that the instrument will measure. The calibration should have points that bracket the expected measurement range. In some cases of flow measurement, it may be necessary to extrapolate a calibration.

Class 1 instrumentation for the measurement of primary temperature and pressure parameters should be laboratory calibrated at least two points more than the order of the calibration curve fit (minimum of three points), whether it is necessary to apply the calibration data to the measured data or if the instrument is of the quality that the deviation between the laboratory calibration and the instrument reading is negligible in terms of affecting the test result. Flow metering that requires calibration should have a 20-point calibration.

Each instrument should also be calibrated such that the measuring point is approached in an increasing and decreasing manner. This exercise minimizes the possibility of any hysteresis effects. Some instruments are built with a mechanism to alter the range once the instrument is installed. In this case, the instrument must be calibrated at each range to be used during the test period.

Class 2 instrumentation for primary parameters may be laboratory calibrated at the number of points equal to the calibration curve fit. If the instrument can be shown to typically have a hysteresis of less than the required accuracy, the calibration points need only be approached from one direction.

Class 2 instrumentation for secondary parameters can be checked in place by redundancy or by field checking. Should the field check be performed, it need be performed only at one point in the expected operating range. Standard plant control system loop checks are acceptable for Class 2 instrumentation used to measure secondary parameters.

4-1.3.9 Timing of Calibration. Because of the variance in different types of instrumentation and their care, no mandate is made regarding the time interval between the initial calibration and the test period. Treatment of the device is much more important than the elapsed time since calibration. An instrument may be calibrated one day and mishandled the next. Conversely, an instrument may be calibrated and placed on a shelf in a controlled environment and the calibration will remain good for an extended time period.

Similarly, the instrument can be installed in the field but valved-out of service and/or it may, in many cases, not be exposed to significant cycling. In these cases, the instrumentation is subject to vibration or other damage and must be field calibrated.

Following a test, it is required to calibrate Class 1 pressure or temperature instrumentation for which there was no redundancy or for which the data is questionable. For the purposes of redundancy, plant instrumentation can be used. If results indicate possible unacceptable drift or damage, then further investigation is warranted. Note that flow element devices and power measurement devices by nature are not conducive to post-test calibration and, therefore, may be exempt from this requirement.

4-1.3.10 Effect of Instrument Ambient Conditions on Uncertainty. It is sometimes desirable but usually not practical or possible to perform laboratory calibration of instruments used to measure primary parameters (Class 1 or Class 2) in a manner that replicates entirely the ambient conditions under which the instrument will be used to make the test measurements. These include temperature, pressure, humidity, electromagnetic interference, and such. This is why the calibration accuracy, as defined in para. 4-1.3.6, is determined and additional uncertainties caused by these field conditions must be known or estimated. Electromagnetic interference can be eliminated through the use of the proper digital equipment and cabling.

4-1.3.11 Calibration Drift. Calibration drift is defined as a shift in the laboratory calibration curve. When a post-test field check or calibration indicates that drift might have been unacceptable to meet the uncertainty requirements of the test, further investigation is warranted.

A post-test laboratory calibration might be ordered, and engineering judgment must be used to determine whether the initial or recalibration is correct. Below are some practices that lead to the application of good engineering judgment.

(a) When instrumentation is transported to the test site between the calibration and the test period, a single point instrumentation check prior to and following the test period can isolate when the drift may have occurred. Examples of this kind of check are vented pressure transmitters, no load on wattmeters, and field verification of temperature devices.

(b) In locations where redundant instrumentation is

Copyright ASME International
Provided by IHS under license with ASME
No reproduction or networking permitted without license from IHS
Not for Resale

employed, calibration drift should be analyzed to determine which calibration data (the initial or recalibration) produce better agreement between redundant instruments.

4-1.3.12 Loop Calibration for Analog Instrumentation. All analog instruments used to measure primary variables (Class 1 or Class 2) should be loop-calibrated. Loop calibration of an instrument with an analog output to the data acquisition system involves the calibration of the instrument through the signal-conditioning equipment. Alternatively, the signal-conditioning device may be calibrated separately from the instrument by applying a known signal to each channel using a precision signal generator. (At the time of the writing of this Code, most instrumentation for which a plant DCS is used as the signal conditioning equipment is analog. Many analog temporary test data acquisition systems are also in use.)

4-1.3.13 Calibration of Digital Instrumentation Signals. Instrumentation with digital output need be calibrated only through to the digital signal output. There is no further downstream signal-conditioning equipment as the conversion to the units of the measured parameter has already been made.

4-1.3.14 Quality Assurance Program. Each calibration laboratory must have in place a quality assurance program. This program is a method of documentation where the following information can be found:

(a) calibration procedures
(b) calibration technician training
(c) standard calibration records
(d) standard calibration schedule
(e) instrument calibration histories

The quality assurance program should be designed to ensure that the laboratory standards are calibrated as required. The program also ensures that properly trained technicians calibrate the equipment in the correct manner.

The parties to test should be allowed access to the calibration facility for auditing. The quality assurance program should also be made available during such a visit.

4-1.4 Plant Instrumentation

It is acceptable to use plant instrumentation for primary variables only if the plant instrumentation (including signal conditioning) can be demonstrated to meet the overall uncertainty requirements. This is usually not the case for Class 1 instrumentation and much of the Class 2 instrumentation.

4-1.5 Redundant Instrumentation

Redundant instruments are two or more devices measuring the same parameter with respect to the same location. Redundant measurements are required for HP steam and cold and hot reheat temperatures. The primary flow section shall have a minimum of two sets of pressure taps and a differential pressure instrument for each set of taps.

Where experience in the use of a particular model or type of instrument dictates that calibration drift can be unacceptable and no other device is available, redundancy is recommended. Other independent instruments in separate locations can also monitor instrument integrity. A sample case would be a constant enthalpy process where pressure and temperature in a steam line at one point verify the pressure and temperature of another location in the line by comparing enthalpies.

4-2 PRESSURE MEASUREMENT

4-2.1 Introduction

This subsection presents requirements and guidance regarding the measurement of pressure. It is recommended that electronic pressure measurement equipment be used for primary measurements to minimize precision error. Dead weight gages, manometers, and other measurement devices may also be used, provided they meet accuracy requirements.

4-2.2 Pressure Transmitter Accuracy

4-2.2.1 Introduction. The required pressure transmitter accuracy will depend on the type of parameters being measured. Refer to paras. 4-1.2.3 and 4-1.2.4 for a discussion on primary and secondary variables.

4-2.2.2 Accuracy Requirements. Primary parameters should be measured with 0.1% accuracy class pressure transmitters to enable a total parameter uncertainty not to exceed 0.3%. These pressure transmitters should be temperature compensated. If temperature compensation is not available, the ambient temperature at the measurement location during the test period must be compared to the temperature during calibration to determine if the decrease in accuracy is acceptable.

4-2.3 Pressure Transmitter Types

There are three types of pressure transmitters: absolute pressure transmitters, gage pressure transmitters, and differential pressure transmitters.

4-2.3.1 Absolute Pressure Transmitters

(a) Application. Absolute pressure transmitters measure pressure referenced to absolute zero pressure. Absolute pressure transmitters should be used on all measurement locations with a pressure equal to or less than atmospheric. Absolute pressure transmitters may also be used to measure pressures above atmospheric pressure.

(b) Calibration. Absolute pressure transmitters can be calibrated using one of two methods. The first method

Copyright ASME International
Provided by IHS under license with ASME
No reproduction or networking permitted without license from IHS Not for Resale

involves connecting the test instrument to a device that develops an accurate vacuum at desired levels. Such a device can be a deadweight gage in a bell jar referenced to zero pressure or a divider piston mechanism with the low side referenced to zero pressure. The second method calibrates by developing and holding a constant vacuum in a chamber using a suction and bleed control mechanism. The test instrument and the calibration standard are both connected to the chamber. The chamber must be maintained at constant vacuum during the calibration of the instrument. Other devices can be used to calibrate absolute pressure transmitters, provided that the same level of care is taken.

4-2.3.2 Gage Pressure Transmitters

(a) Application. Gage pressure transmitters measure pressure referenced to atmospheric pressure. To obtain absolute pressure, the measured site atmospheric pressure must be added to the gage pressure. Gage pressure transmitters may only be used on measurement locations with pressures higher than atmospheric. Gage pressure transmitters are preferred over absolute pressure transmitters in measurement locations above atmospheric pressure because they are easier to calibrate.

(b) Calibration. Gage pressure transmitters can be calibrated by an accurate deadweight gage. The pressure generated by the deadweight gage must be corrected for local gravity, air buoyancy, piston surface tension, piston area deflection, actual mass of weights, actual piston area, and working medium temperature. If the above corrections are not used, the pressure generated by the deadweight gage may be inaccurate. The actual piston area and mass of weights is determined each time the deadweight gage is calibrated. Other devices can be used to calibrate gage pressure transmitters, provided that the same level of care is taken.

4-2.3.3 Differential Pressure Transmitters

(a) Application. Differential pressure transmitters are used where flow is determined by a differential pressure meter or where pressure drops in a duct or pipe must be determined.

(b) Calibration. Differential pressure transmitters used to measure primary variables must be calibrated at line static pressure unless information is available about the effect of high line static pressure on the instrument accuracy. Calibrations at line static pressure are performed by applying the actual expected process pressure to the instrument as it is being calibrated. Calibrations at line static pressure can be accomplished by one of three methods

(1) two highly accurate deadweight gages

(2) a deadweight gage and divider combination

(3) one deadweight gage and one differential pressure standard

Differential pressure transmitters used to measure secondary variables do not require calibration at line static pressure and can be calibrated using one accurate deadweight gage connected to the high side of the instrument. If line static pressure is not used, the span must be corrected for high line static pressure shift unless the instrument is internally compensated for the effect.

Once the instrument is installed in the field, the differential pressure from the source should be equalized and a zero value read. This zero bias must be subtracted from the test-measured differential pressure. Other devices can be used to calibrate differential pressure transmitters, provided that the same level of care is taken.

4-2.4 Absolute Pressure Measurements

4-2.4.1 Description. Absolute pressure parameters may be determined with absolute pressure transmitters. Typical absolute pressure measurements include condenser pressure and turbine exhaust pressure.

4-2.4.2 Installation. Absolute pressure transmitters used for steam pressure should be installed at a stable location. Transmitters should be installed in the same orientation as they are calibrated. In vacuum service, the transmitters should be installed with the sensing line sloping continuously upwards to the instrument and purged. Care should be taken to verify that purging has no effect on the reading.

4-2.5 Gage Pressure Measurements

Gage pressure measurement parameters are those at or above atmospheric pressure. These measurements may be made with gage or absolute pressure transmitters. Gage pressure transmitters are recommended since they are easier to calibrate and check in situ. Caution must be used with low pressure parameters because they may enter the vacuum region at part load operation.

4-2.5.1 Installation. Pressure transmitters used in steam or water service should be installed with the sensing line sloping continuously downward to the instrument. This ensures that the sensing line will be full of water. In steam service, the sensing line should extend at least 2 ft horizontally from the source before the downward slope begins. This horizontal length will allow condensation to form completely so the downward slope will be full of water.

The water leg is the condensed water in the sensing line. This water causes a static pressure head to develop in the sensing line. This static head must be subtracted from the pressure measurement. The static head is calculated by multiplying the sensing line vertical height by gravity and the density of the water in the sensing line.

Each pressure transmitter should be installed with an isolation valve at the end of the sensing line upstream of the instrument. The line should be vented before the instrument installation, and sufficient time should be al-

Copyright ASME International
Provided by IHS under license with ASME
No reproduction or networking permitted without license from IHS
Not for Resale

lowed to form a water leg in the sensing line before any reading is taken.

4-2.6 Differential Pressure Measurements

4-2.6.1 Description. Differential pressure measurements are used to measure flow of steam or water over or through a flow element or pressure loss in a duct or pipe. The differential pressure transmitter measures this pressure difference or pressure drop that is used to calculate the fluid flow.

4-2.6.2 Installation. Differential pressure transmitters should be installed using a five-way manifold shown in Fig. 4-2.6.2-1. This manifold is recommended rather than a three-way manifold because the five-way manifold allows for detection of any leakage past the equalizing valve.

Differential pressure transmitters used in steam or water service should be installed with the sensing lines sloping downward to the instrument. The sensing lines for differential transmitters used in steam service should extend 2 ft horizontally before the downward slope begins. This will ensure that the vertical length of the sensing line is full.

When a differential pressure meter is installed on a flow element such that the upstream and downstream tap locations are at different elevations, it is necessary to correct for water leg differences between the tap elevations caused by the difference in the density of the water in the flow section and the water in the pressure-sensing lines. The correction for the noninsulated case is shown in Fig. 4-2.6.2-2.

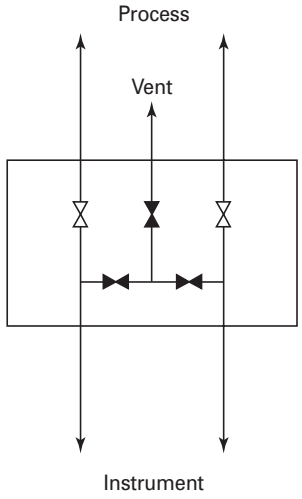

Fig. 4-2.6.2-1 Five-Way Manifold

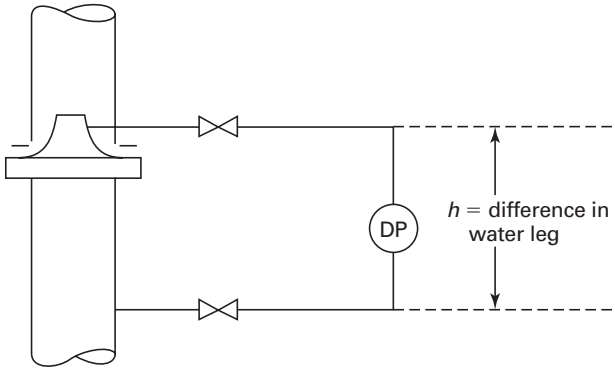

For upward flow:
$\Delta p_{true} = \Delta p_{meas.} + (p_{amb} - p_{pipe})(\frac{g}{g_o})h$

For downward flow:
$\Delta p_{true} = \Delta p_{meas.} - (p_{amb} - p_{pipe})(\frac{g}{g_o})h$

Fig. 4-2.6.2-2 Water Leg Correction for Flow Measurement

where

Δp_{true} = true differential pressure across the meter
Δp_{meas} = indicated differential pressure
ρ_{amb} = density of the flowing fluid at ambient temperature
ρ_{pipe} = density of the flowing fluid at flowing temperature
h = difference in the water leg between the two sensing locations

4-2.7 Exhaust Pressure Measurements

Exhaust pressure measurements are used to measure the static exhaust pressure of a condensing steam turbine. For exhaust pressure measurements on noncondensing steam turbines, see para. 4-2.5.

4-2.7.1 Installation. The exhaust static pressure of a condensing turbine is to be measured at, or on either side of and adjacent to, the exhaust joint or exhaust duct. Special locations of demonstrable accuracy must be used, but in no case shall there be fewer than two such locations per exhaust annulus. When the test results are not available to determine the proper location, it is recommended that one pressure location be used for each 1.5 m^2 (16 ft^2) of free area at the joint but in no case more than eight for each exhaust annulus. The Code recommends that the pressure for each tap be determined by individual transmitters. The pressure to be considered is the average of all of them. A discrepancy in excess of 2.5 mm (0.1 in.) Hg between simultaneous readings is to be cause for investigation. Larger exhaust areas are commonly subject to spatial variations exceeding 2.5 mm (0.1 in.) Hg.

4-2.7.2 Exhaust Joint. The exhaust joint shall be the junction where the turbine exhaust is attached to the flange or an expansion joint of a condenser or welded to the condenser neck.

Copyright ASME International
Provided by IHS under license with ASME
No reproduction or networking permitted without license from IHS
Not for Resale

4-2.7.3 Pressure Connections. Pressure connections should be carried to the interior of the conduit and be provided with basket tips or guide plates. Basket tips are preferred. If the exhaust is provided with ribs or braces traversing the stream space, some of the instrument piping connections may pass through them with the opening flush and normal to the surface of the rib. The terminals of the exhaust pressure instrument connections shall be distributed over the entire exhaust-conduit area and located so that they will be centered, as closely as practicable, in equal areas. The basket tips should be installed at a 45 deg angle, as shown in Fig. 4-2.7.3-1. Figure 4-2.7.3-1 is based on U.S. Customary units because the research supporting the basket tip device was based on U.S. Customary units.

Alternatively, guide plates may be used and should be arranged so that the steam flow is perpendicular to the pressure tap, as shown in Fig. 4-2.7.3-2.

Careful attention must be given to the location of basket tips and guide plates because pressures at certain points at the exhaust joint may be influenced by local high steam velocities.

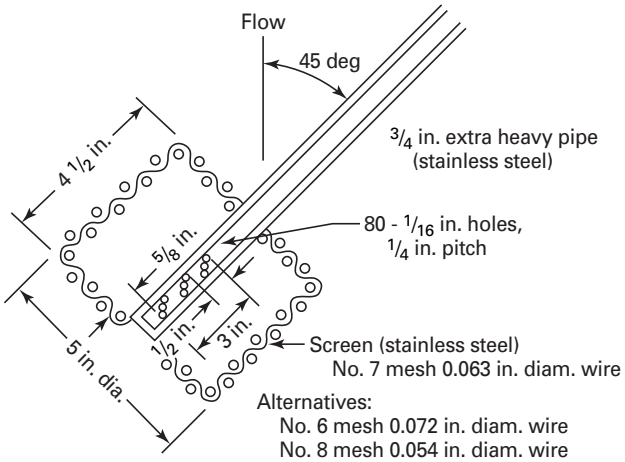

Fig. 4-2.7.3-1 Basket Tip

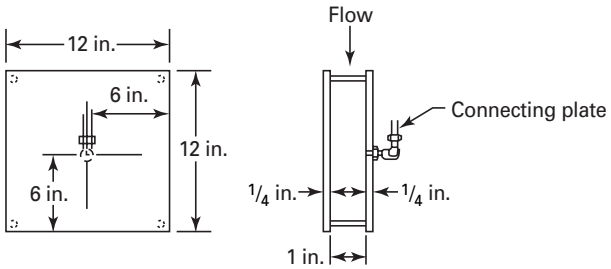

in.	mm
12	304.80
6	152.40
1/4	6.35
3/8	9.53
1	25.40

Fig. 4-2.7.3-2 Guide Plate

4-2.8 Installation

All signal cables must have a grounded shield to drain any induced currents from nearby electrical equipment. All signal cables should be installed away from EMF-producing devices such as motors, generators, electrical conduit, cable trays, and electrical service panels.

Prior to calibration, the pressure transducer range should be selected to match the expected process range. However, the sensitivity to ambient temperature fluctuation may change as the range is adjusted. Additional points will increase the accuracy but are not required. During calibration, the measuring point should be approached from an increasing and decreasing manner to minimize the hysteresis effects. Some pressure transducers have the capability of changing the range once the transmitter is installed. The transmitters must be calibrated at each range to be used during the test period.

Where appropriate for steam and water processes, the readings from all static pressure transmitters and any differential pressure transmitters with taps at different elevations (such as on vertical flow elements) must be adjusted to account for elevation head in water legs. This adjustment may be applied at the transmitter, in the control or data acquisition system, or manually by the user after the raw data are collected. Care must be taken to ensure this adjustment is applied properly, particularly at low static pressures, and that it is only applied once.

For differential pressure transmitters on flow devices, the transmitter output is often an extracted square root value unless the square root is applied in the plant control system. Care should be taken to ensure that the square root is applied only once.

4-3 TEMPERATURE MEASUREMENT

4-3.1 Introduction

This subsection presents requirements and guidance regarding the measurement of temperature. It also discusses applicable temperature measurement devices, calibration of temperature measurement devices, and application of temperature devices. Since temperature measurement technology will change over time, this Code does not limit the use of other temperature mea-surement devices not currently available or not currently reliable. If such a device becomes available and is shown to be of the required uncertainty and reliability, it may be used.

(a) All instruments used to measure Class 1 primary parameters must have a systematic uncertainty of not more than 0.28°C (0.50°F) for temperatures less than 93°C (200°F) and not more than 0.56°C (1°F) for temperatures more than 93°C (200°F).

Copyright ASME International
Provided by IHS under license with ASME
No reproduction or networking permitted without license from IHS
Not for Resale

(b) Instruments used to measure Class 2 primary parameters must have a systematic uncertainty of not more than 1.67°C (3°F).

(c) Instruments used to measure secondary parameters should have a systematic uncertainty of not more than 3.89°C (7°F). Primary and secondary parameters are described in para. 4-1.2.

4-3.2 Location

Location of temperature measurement Class 1 primary parameter for enthalpy determinations shall be as close as practicable to the points at which the corresponding pressures are to be measured. Thermowells should be located downstream of the pressure taps, or, if upstream, should not be in the same longitudinal plane. Thermowells must be installed within 4 pipe diameters of each other and may be in line, axially, if installed at least 2 pipe diameters apart. If installed within 2 pipe diameters, the thermowells must be at least 45 deg apart measured circumferentially.

The mean of the two readings shall be considered the temperature of the fluid. Discrepancies between the two readings must be resolved if these exceed 0.56°C (1°F). Temperature differences caused by flow stratification shall be minimized by locating the temperature sensor sufficiently downstream of an elbow, or an extraction nozzle, to allow mixing of the stratified flow before the measurement point. Temperature instrumentation signal wires should have a grounded shield to drain any induced currents from nearby electrical equipment. All signal cables should be installed away from EMF-producing devices such as motors, generators, electrical conduit, and electrical service panels. Twisting wires[1] is the most effective practical way of reducing magnetic noise.

4-3.3 Recommended Sensors

4-3.3.1 Resistance Temperature Detector (RTD). The RTD may be used in testing from any low temperature to the highest temperature recommended by the RTD manufacturer. Typically, RTDs can measure in excess of 649°C (1,200°F). ASTM E 1137-97 provides Standard Specifications for Industrial Platinum Resistance Thermometers, which include requirements for pressure, vibration, and mechanical shock to improve longevity of these sensors.

Temperature measurements of Class 1 primary parameters shall be measured with an industrial platinum resistance Grade A four-wire type. Temperature measurements of Class 2 primary parameters can be measured by an industrial platinum resistance Grade B three-wire type. The calculation of temperature from the resistance should be done according to equations given in ASTM E 1137-97.

4-3.3.2 Thermocouples. Thermocouples may be used to measure the temperature of any fluid above 93°C (200°F). The maximum temperature depends on the type of thermocouple and sheath material used. Thermocouples may be used for measurements below 93°C (200°F) if extreme caution is used. The thermocouple is a differential-type device. The thermocouple measures the difference between the measurement location in question and a reference temperature. The greater this difference the higher the EMF signals from the thermocouple. Therefore, below 93°C (200°F), the EMF becomes low and subject to induced noise causing increased bias and inaccuracy.

"The EMF developed by a thermocouple made from homogeneous wires will be a function of the temperature difference between the measuring and the reference junction. If, however, the wires are not homogeneous, and the inhomogeneity is present in a region where a temperature gradient exists, extraneous EMF will be developed, and the output of the thermocouple will depend upon factors in addition to the temperature difference between the two junctions. The homogeneity of the thermocouple wire, therefore, is an important factor in accurate measurements."[2]

"All base-metal-metal thermocouples become inhomogeneous with use at high temperatures, however, if all the inhomogeneous portions of the thermocouple wires are in a region of uniform temperature, the inhomogeneous portions have no effect upon the indications of the thermocouple. Therefore, an increase in the depth of immersion of a used couple has the effect of bringing previously unheated portion of the wires into the region of temperature gradient, and thus the indications of the thermocouple will correspond to the original EMF-temperature relation, provided the increase in immersion is sufficient to bring all the previously heated part of the wires into the zone of uniform temperature. If the immersion is decreased, more inhomogeneous portions of the wire will be brought into the region of temperature gradient, thus giving rise to a change in the indicated EMF. Furthermore, a change in the temperature distribution along inhomogeneous portions of the wire nearly always occurs when a couple is removed from one installation and placed in another, even though the measured immersion and the temperature of the measuring junction are the same in both cases. Thus the indicated EMF is changed."[3]

Thermocouples are susceptible to drift after cycling. Cycling is the act of exposing the thermocouple to process temperature and removing to ambient condi-

[1] Klipec B.E., "Reducing Electrical Noise in Instrument Circuits," IEEE Trans. Ind. Gen. App., IGA-3, Mar./Apr. 1967, p. 90.

[2] ASME PTC 19.3-1974 (R1986), "Temperature Measurement." Chapter 9, para. 70, p. 106.

[3] Dahl A.I., "Stability of Base-metal Thermocouples in Air from 800 to 2200°F." *Temperature*, Vol. 1, 1941, p. 1238.

Copyright ASME International
Provided by IHS under license with ASME
No reproduction or networking permitted without license from IHS Not for Resale

tions. The number of times a thermocouple is cycled should be kept to a minimum.

Thermocouples can effectively be used in high vibration areas such as main or high pressure inlet steam to the steam turbine. This Code recommends that the highest EMF per degree be used in all applications. NIST has recommended temperature ranges for each specific type of thermocouple.

(a) Class 1 Primary Parameters. Thermocouples used to measure Class 1 primary parameters must have continuous leads from the measurement tip to the connection on the cold reference junction. These high accuracy thermocouples must have a cold reference junction at 0°C (32°F) or an ambient reference that is well-insulated and calibrated.

(b) Class 2 Primary Parameters. Thermocouples used to measure Class 2 primary parameters can have junctions in the sensing wire. The junction of the two sensing wires must be maintained at the same temperature. The reference cold junction may be at ambient temperature for these less accurate thermocouples, provided that the ambient is measured and the measurement is compensated for changes in cold junction temperature.

(c) Reference Junctions. The temperature of the cold junction shall be measured accurately. The accuracy with which the temperature of the measuring junction is measured can be no greater than the accuracy with which the temperature of the cold junction is known. The cold junction temperature shall be held at the ice-point or at the stable temperature of an isothermal reference. When thermocouple cold junctions are immersed in an ice bath, consisting of a mixture of melting, shaved ice and water,[4] the bulb of a precision thermometer shall be immersed at the same level as the cold junctions and be in contact with them. Any deviation from the ice-point shall be promptly corrected. Each cold junction shall be electrically insulated.

When the isothermal–cold junction reference method is used, it shall employ an accurate temperature measurement of the reference sink acceptable to the parties conducting the test. When electronically controlled reference junctions are used, they shall have the ability to control the reference temperature to within ±0.03°C (0.05°F). Particular attention must be paid to the terminals of any reference junction since errors can be introduced by temperature variation, material properties, or wire mismatching. By calibration, the overall reference system shall be verified to have an uncertainty of less than ±0.11°C (0.2°F). Isothermal thermocouple reference blocks furnished as part of digital systems may be used for turbine tests run in accordance with the Code, provided the accuracy is equivalent to the electronic reference junction. Commercial data acquisition systems employ a measured reference junction, and the accuracy of this measurement is incorporated into the manufacturer's specification for the device. The uncertainty of the reference junction shall be included in the uncertainty calculation of the measurement to determine if the measurement meets the standards of this Code.

4-3.3.3 Thermocouple Signal Measurement. Many instruments are used today to measure the output voltage, resistance, or temperature. The use of each of these instruments in a system to measure temperature requires they meet the uncertainty requirements for the parameter.

4-3.4 Calibration of Primary Parameters Temperature Measurement

This Code recommends that primary parameter temperature instrumentation have a suitable calibration history (three or four sets of calibration data). This calibration history should include the temperature level the device experienced between calibrations. A device that is stable after being used at lower temperatures may not be stable at higher temperatures.

During the calibration of any thermocouple, the reference cold junction shall be held at the ice-point with an electronic reference junction, isothermal reference junction, or in an ice bath. The calibration shall be made by an acceptable method, with the standard being traceable to a recognized national standards organization such as the National Institute of Standards and Technology. Calibration shall be conducted over the temperature range in which the instrument is used.

The calibration of temperature measurement devices is accomplished by inserting the candidate temperature measurement device into a calibration medium along with a temperature standard. The temperature of the calibration medium is then set to the calibration temperature set point. The temperature of the calibration medium is allowed to stabilize until the temperature of the standard is fluctuating less than the accuracy of the standard. The signal or reading from the standard and the candidate temperature device are sampled to determine the bias of the candidate temperature device. See ASME PTC 19.3 for a more detailed discussion of calibration methods.

4-3.5 Typical Applications

The following description provides requirements for Class 1 temperature measurements. These should be considered recommendations for Class 2 temperature measurements.

4-3.5.1 Temperature Measurement of Fluid in a Pipe or Vessel. Temperature measurement of a fluid in a pipe or vessel is accomplished by installing a thermowell. A thermowell is a pressure-tight device that protrudes from the pipe or vessel wall into the fluid.

[4] ASTM MNL 12, "Manual on the Use of Thermocouples in Temperature Measurement." Chapter 7, Reference Junctions.

Copyright ASME International
Provided by IHS under license with ASME
No reproduction or networking permitted without license from IHS
Not for Resale

Tubes and wells shall be as thin as possible, consistent with safe stress and other ASME code requirements, and the inner diameters of the wells shall be clean, dry, and free from corrosion or oxide. The thermowell has a bore extending to near the tip to facilitate the immersion of a temperature measurement device. The bore should be sized to allow adequate clearance between the measurement device and the well. Often the temperature measurement device becomes bent, causing difficulty in the insertion of the device. The bottom of the bore of the thermowell should be the same shape as the tip of the temperature measurement device. The bore should be cleaned prior to inserting the temperature device. The thermowell should be installed so that the tip protrudes through the boundary layer of the fluid to be measured.

Unless limited by design considerations, the temperature-sensitive element shall be immersed in the fluid at least 75 mm (3 in.) but not less than one-quarter of the pipe diameter. In pipes of less than 100 mm (4 in.) diameter, the element must be arranged axially in the pipe by inserting it in an elbow or tee. If such fittings are not available, the piping shall be modified to render this possible. The thermowell should be located in an area where the fluid is well-mixed and has no potential gradients. If the location is near the discharge of a boiler, turbine, condenser, or other power plant component, the thermowell should be downstream of an elbow in the pipe. If no more than one thermowell is installed in a given pipe location, it should be installed on the opposite side of the pipe and not directly downstream of another thermowell. When the temperature measurement device is installed, it should be spring loaded to ensure that the tip of the device remains against the bottom of the thermowell.

For Class 1 primary parameter measurements, the Code recommends that the portion of the thermowell protruding outside the pipe or vessel be insulated along with the device itself to minimize conduction losses. For measuring the temperature of desuperheated steam, the thermowell location relative to the desuperheating spray injection must be carefully chosen. The thermowell must be located where the desuperheating water has thoroughly mixed with the steam. This can be accomplished by placing the thermowell downstream of two elbows in the steam line after the desuperheating fluid injection point.

4-3.6 Temperature Scale

The International Temperature Scale of 1990 (ITS-90) is realized and maintained by the National Institute of Standards and Technology to provide a standard scale of temperature for use by science and industry in the United States. This scale was adopted by the International Committee of Weights and Measures at its meeting in September 1989 and it became the official international temperature scale on January 1, 1990. The ITS-90 supersedes the International Practical Temperature Scale of 1968, Amended Edition of 1975 [IPTS-68 (75)] and the 1976 Provisional 0.5 to 30 K Temperature Scale (EPT-76).

Temperatures on the ITS-90 can be expressed in terms of International Kelvin Temperatures, with the symbol T_{90}, or in terms of International Celsius Temperatures with the symbol t_{90}. The units of T_{90} and t_{90} are Kelvin (K) and degrees Celsius (°C), respectively. The relation between T_{90} (K) and t_{90} (°C) is

$$t_{90} = T_{90} - 273.15$$

Values of Fahrenheit temperature (t_f, °F) are obtained from the conversion formula

$$t_f = (9/5)t_{90} + 32$$

The ITS-90 was designed in such a way that the temperature values on it very closely approximate Kelvin thermodynamic temperature values. Temperatures on the ITS-90 are defined in terms of equilibrium states of pure substances (defining points), interpolating instruments, and equations that relate the measured property to T_{90}. The defining equilibrium states and the values of temperature assigned to them are listed in NIST Technical Note 1265, Guidelines for Realizing the International Temperature Scale of 1990 (ITS-90) and ASTM Manual Series: MNL 12, Manual on the Use of Thermocouples in Temperature Measurement.

4-4 FLOW MEASUREMENT

4-4.1 Water and Steam Flow Measurement

The flows of water and steam in pipes are required in the testing of a steam turbine in combined cycle configuration. This includes direct measurement of flows that enter and leave the machine as well as flows that must be measured due to indirect measurement of primary flows.

4-4.1.1 Differential Pressure Meters. In most power plant applications, use of differential pressure meters (orifices, nozzles, and venturis) is common and is the class of meters recommended and discussed by this Code. However, other types of flow meters may be used if they can be demonstrated to be of the same or better levels of uncertainty required by this Code.

4-4.1.2 Compliance With ASME Requirements. For a differential pressure meter to be used as a Class 1 meter, it must be designed, fabricated, and installed in strict accordance with ASME PTC 19.5, and the calculation of flow must be performed in accordance with that Code. This includes all the following flow-metering documentation requirements that apply to differential pressure meters:

(a) piping straight length requirements upstream and downstream of the primary element and between the flow conditioner (if used) and the primary element

(b) piping and flow element diameters and roundness, locations of roundness measurements, and temperature at the time of measurement

Copyright ASME International
Provided by IHS under license with ASME
No reproduction or networking permitted without license from IHS
Not for Resale

Table 4-4.1.4 Units in the General Flow Equation

	Mass Flow Rate Units, q_m	Meter Geometry, Fluid Density, and Differential Pressure Units			Values of Constants	
		d or D	ρ	ΔP	Proportionality Constant, g_c	Units Conversion Constant, n
SI units	$\frac{kg}{sec}$	m	$\frac{kg}{m^3}$	Pa	$g_c \equiv 1.0$ dimensionless	$n \equiv 1.0$ dimensionless [Note (1)]
U.S. customary units	$\frac{lbm}{hr}$	in.	$\frac{lbm}{ft^3}$	$\frac{lbf}{in.^2}$	$g_c = 32.1740486$ $\frac{lbm - ft}{lbf - sec^2}$	$n \equiv 300.0$ $\frac{ft^2}{sec^2}\left(\frac{in.^2}{ft^2} \times \frac{sec^2}{hr^2}\right)^{0.5}$

NOTE:
(1) $N \equiv kg\text{-}m/s^2$, and $Pa \equiv N/m^2$; therefore, $Pa \equiv kg/m\text{-}s^2$.

(c) piping smoothness
(d) meter tube and flow element material description
(e) internal smoothness of nozzle or venturi element
(f) smoothness and flatness of upstream face of orifice plate
(g) dimensions and machining tolerances for all dimensions of primary element given in ASME PTC 19.5
(h) sharpness of orifice plate edge
(i) thickness of orifice plate
(j) inspection for assurances of no burrs, nicks, wire edges, and such
(k) location, size, and manufacturing requirements of pressure taps, including machining and dimensional tolerances
(l) location of temperature measurement
(m) eccentricity of primary element and piping
(n) type and manufacturing requirements of flow conditioner, if used

Documentation of factory measurements of manufacturing requirements per ASME PTC 19.5, and of the start-up procedures, should be examined to validate compliance with these requirements. Start-up procedures must also ensure that spool sections are provided for use during any steam blows to avoid damage to the flow metering. While stored during steam blows, the flow metering must be capped and protected from environmental damage such as moisture and dirt. Special care must therefore be taken in the specifications for the design of the plant to ensure that all plant flow meters to be used for an ASME PTC 6.2 Code test meet these requirements.

4-4.1.3 Plant Design Considerations. There are many combinations of Class 1 and other flow metering that will meet the uncertainty requirements of this Code. It is very important, as early as the specification stages of the plant design, to consider testing requirements to optimize all design considerations such that the test uncertainty limits of this Code will not be exceeded; the requirements of this paragraph shall be adhered to for any Class 1 meter.

Compliance with ASME PTC 19.5 requirements for Class 1 metering for the determination of flow at primary locations shall be considered during the design phases of the plant.

4-4.1.4 Calculation of Flow Through Differential Pressure Class Meters. The general equation of flow through a differential pressure class meter from ASME PTC 19.5 is as follows:

$$q_m = n\,\frac{\pi}{4}\,d^2 C\varepsilon\,\sqrt{\frac{2\rho(\Delta P)g_c}{1-\beta^4}} \qquad (4\text{-}1)$$

where
q_m = mass flow rate
n = units conversion factor for all units to be consistent
d = diameter of flow element at flowing fluid temperature
C = discharge coefficient
ε = expansion factor
β = ratio of flow element and pipe diameters (d/D), both diameters at the flowing fluid temperature
ρ = fluid density
ΔP = differential pressure
g_C = proportionality constant

Table 4-4.1.4 indicates the appropriate units and the conversion factor for Eq. (4-1) in U.S. Customary and SI units.

The procedures for determining the discharge coefficient and expansion factor for the various devices are given in ASME PTC 19.5.

Density is determined from the Steam Tables. The viscosity of the steam or water, necessary to determine the Reynolds number on which the discharge coefficient is dependent, is also determined from the Steam Tables, as is the isentropic coefficient of steam, which is needed to determine the expansion factor.

Note that because the discharge coefficient is dependent on Reynolds number, which in turn is dependent on flow, both the sizing of and calculation of flow through these meters involves iteration.

Copyright ASME International
Provided by IHS under license with ASME
No reproduction or networking permitted without license from IHS
Not for Resale

4-4.1.5 Accuracy and Other Characteristics of Differential Pressure Flow Meters. For a properly constructed differential pressure meter, the discharge coefficient is a function of the Reynolds number of flow and the diameters of the flow element and the pipe for the range of flows found in power plants.

Due to the repeatability of hydraulic laboratory calibration data for differential pressure meters of like type and size, relationships of C vs. R_D are available for each type of differential pressure meter. Empirical formulations for discharge coefficient are based on studies of the results of large numbers of calibrations.

In Performance Test Code tests, application of the empirical formulations for discharge coefficient may be used for Class 1 primary variables if uncertainty requirements are met. The pretest uncertainty analysis may require a hydraulic laboratory calibration of a specific differential pressure meter to determine the specific C-vs.-R_D number relationship for that meter. This Code mandates calibration of the meter or meters used for the determination of high pressure steam flow or calibration of alternative meters that meet the requirements of Table 3-6.4.1. Investigation is needed if the results differ from each tap set calculation by more than the measurement uncertainty.

The expansion factor is a function of the diameters of the flow element and the pipe, the ratio of the differential pressure to the static pressure, and the isentropic exponent of the gas or vapor. It is used for compressible flows, in this case steam. It corrects the discharge coefficient for the effects of compressibility. This means that a hydraulic calibration of a differential pressure flow meter is equally valid for compressible flow application as for incompressible flow application with insignificant loss of accuracy. This is a strong advantage of differential pressure meters in general because laboratory determination of compressible flow is generally less accurate than of incompressible flow. The value of ε for water flow measurement is unity since it is incompressible.

The systematic uncertainty of the empirical formulation of the discharge coefficient and the expansion factor in the general equation for each device is used in ASME PTC 19.5 and repeated in Table 4-4.1.5-1 for convenience. These values assume that the metering run is manufactured, installed, and used as specified in ASME PTC 19.5 and herein.

Table 4-4.1.5-1 Summary Uncertainty of Discharge Coefficient and of Expansion Factor, Pressure, and Differential Pressure in the Same Units

Component	Uncertainty of Empirical Discharge Coefficient, C, for an Uncalibrated Flow Element	Uncertainty of Expansion Factor, ε
Orifice	0.6% for $\beta \le 0.6$	$\frac{4(\Delta P)}{P_1}$
Venturi	1.0% for $0.2 \le \beta \le 0.5$	$\frac{(4 + 100\beta^8)\ (\Delta P)}{P_1}$
Nozzle, wall taps	1.0% for $0.2 \le \beta \le 0.5$	$\frac{2(\Delta P)}{P_1}$
Nozzle, throat taps	1.0% for $0.25 \le \beta \le 0.5$	$\frac{2(\Delta P)}{P_1}$

The uncertainty of the discharge coefficient is by far the most significant component of flow measuring uncertainty and is the dominant factor in the flow uncertainty analysis, assuming that the process and differential pressure instrumentation used in conjunction with the meter is satisfactory. Qualified hydraulic laboratories can usually calibrate within an uncertainty of approximately 0.2%. Thus, after considering other sources of uncertainty, uncertainties of less than 0.3% in the discharge coefficients of laboratory-calibrated meters can be achieved.

The procedures for fitting a curve through laboratory calibration data is given in detail for each type of differential pressure meter in ASME PTC 19.5. The procedures for extrapolation of a calibration to higher Reynolds numbers than available in the laboratory, if necessary, is also given for each type of device in ASME PTC 19.5. Extrapolation of calibration data without additional uncertainty requires careful review of the calibration data scatter and slope. If extrapolation is necessary, the uncertainties of the extrapolated discharge coefficients are equal to those that are within the Reynolds number range of the hydraulic laboratory. This is because the extrapolation equations used are based on fluid dynamics phenomena, such that the slope of the extrapolation is very well known. A sample for an orifice-metering run is shown in Mandatory Appendix II.

Table 4-4.1.5-2 Uncertainties in Mass Flow for Correctly Applied Differential Pressure Flow Meters

Component	Steam Flow Uncertainty	Water Flow Uncertainty
Orifice	0.60–0.75% uncalibrated; 0.3–0.5% calibrated; not recommended for HP steam	0.60–0.70% uncalibrated; 0.3–0.4% calibrated
Venturi	1.1–1.2% uncalibrated; 0.3–0.5% calibrated	1.0–1.1% uncalibrated; 0.3–0.4% calibrated
Nozzle, pipe taps	1.1–-1.2% uncalibrated; 0.3–0.5% calibrated	1.0–1.1% uncalibrated; 0.3–0.4% calibrated
Nozzle, throat taps	1.1–1.2% uncalibrated; 0.3–0.5% calibrated	1.0–1.1% uncalibrated; 0.3–0.4% calibrated

Copyright ASME International
Provided by IHS under license with ASME
No reproduction or networking permitted without license from IHS Not for Resale

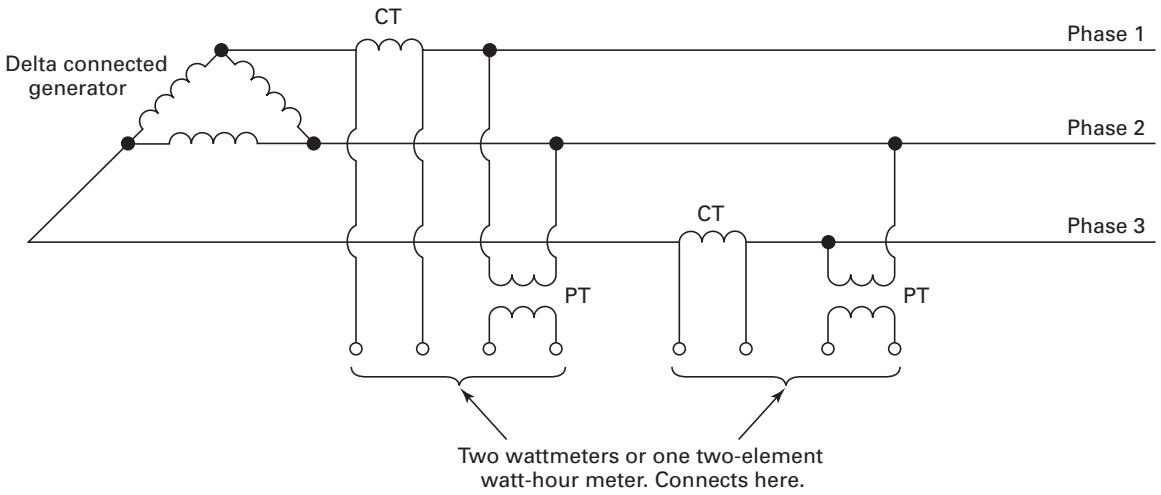

Fig. 4-5.2.1-1 Two-Meter System for Use on Three-Wire Delta-Connected Power Systems

The total measurement uncertainty of the flow contains components consisting of the uncertainty in the determination of fluid density and of pressure, temperature, and differential pressure measurement uncertainty in addition to the components caused by the uncertainty in C and ε. Table 4-4.1.5-2 gives the uncertainty ranges of differential pressure class devices for water and steam, assuming that Class 1 instrumentation is used also for the process and differential pressure measurements and that the requirements of para. 4-4.1.3 are strictly adhered to. More information can be found in ASME PTC 19.5.

It should be noted that, in the past, water flow measurement was much more accurate than steam flow measurement because of the inherent inaccuracies in the determination of density and the expansion factor. With current measurement techniques, the uncertainty of direct steam flow measurement has improved to the point where it may be an acceptable alternative to water flow measurement.

4-4.1.6 Selection of Differential Pressure Meters. The complexities associated with the selection of differential pressure meters is such that they cannot be covered in this Code. The Code user is referred to ASME PTC 19.5 for this information.

4-5 ELECTRICAL GENERATION MEASUREMENT

4-5.1 Introduction

Electrical parameters required for the evaluation of combined cycle steam turbine performance include gross electrical output, power factor, exciter power, and other auxiliary electrical loads. This subsection of the Code provides guidance and requirements for the determination of these parameters.

ANSI/IEEE Standard 120-1989, IEEE Master Test Guide for Electrical Measurements in Power Circuits, should be consulted for more information and for measurement requirements not included in this Code.

4-5.2 Electrical Measurement System Connections

The minimum metering methods required for use on each of these three-phase systems are as follows:

(a) three-wire generator connections: two single-phase meters or one two-phase meter

(b) four-wire generator connections: three single-phase meters or one three-phase meter

Different types of three- and four-wire generator connections may exist.

4-5.2.1 Three-Wire Power Systems. Examples of three-wire power generation systems are shown in Figs. 4-5.2.1-1 and 4-5.2.1-2. Various three-wire power systems exist due to the type of the connected generator. It is recommended to review the particular type and the site arrangement before deciding which one is suitable to a given measurement application.

Power and energy in three-wire power systems can be measured using two Open Delta Connected potential transformers (PTs) and two current transformers (CTs). The two-metering system is shown in Figs. 4-5.2.1-1 and 4-5.2.1-2 for a Delta-connected and a Wye-connected generator, respectively.

Several types of metering devices can be used in connection with these instrument transformers: two watt meters, two watt-hour meters, or a two-element watt-hour meter. A var-type meter is the recommended method to measure reactive power to establish the power factor. Power factor is then determined using the following equation:

$$PF = \frac{Watts_t}{\sqrt{Watts_t^2 + Vars_t^2}}$$

Copyright ASME International
Provided by IHS under license with ASME
No reproduction or networking permitted without license from IHS
Not for Resale

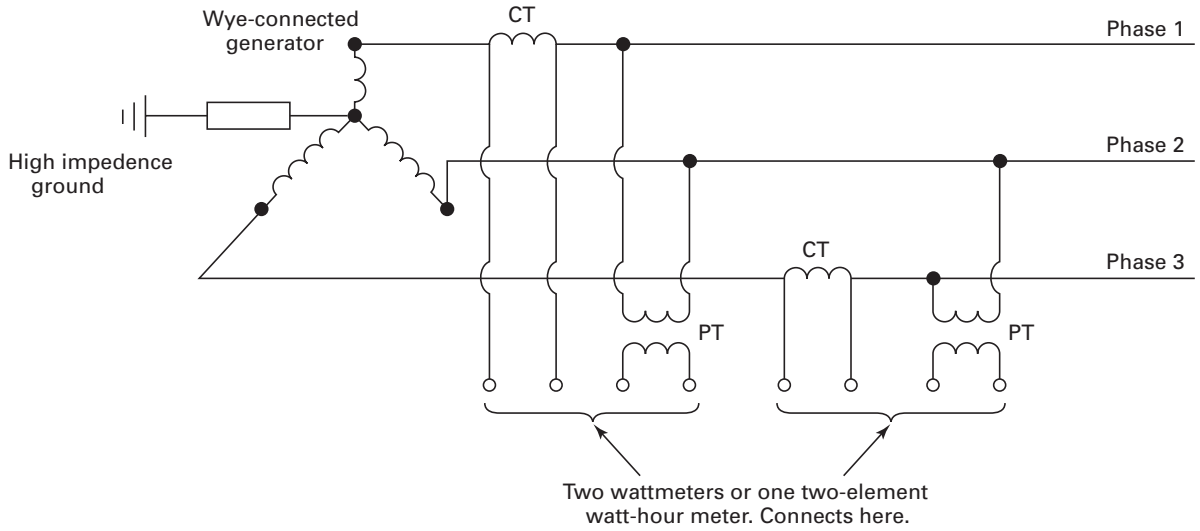

Fig. 4-5.2.1-2 Two-Meter System for Use on Three-Wire Wye-Connected Power Systems

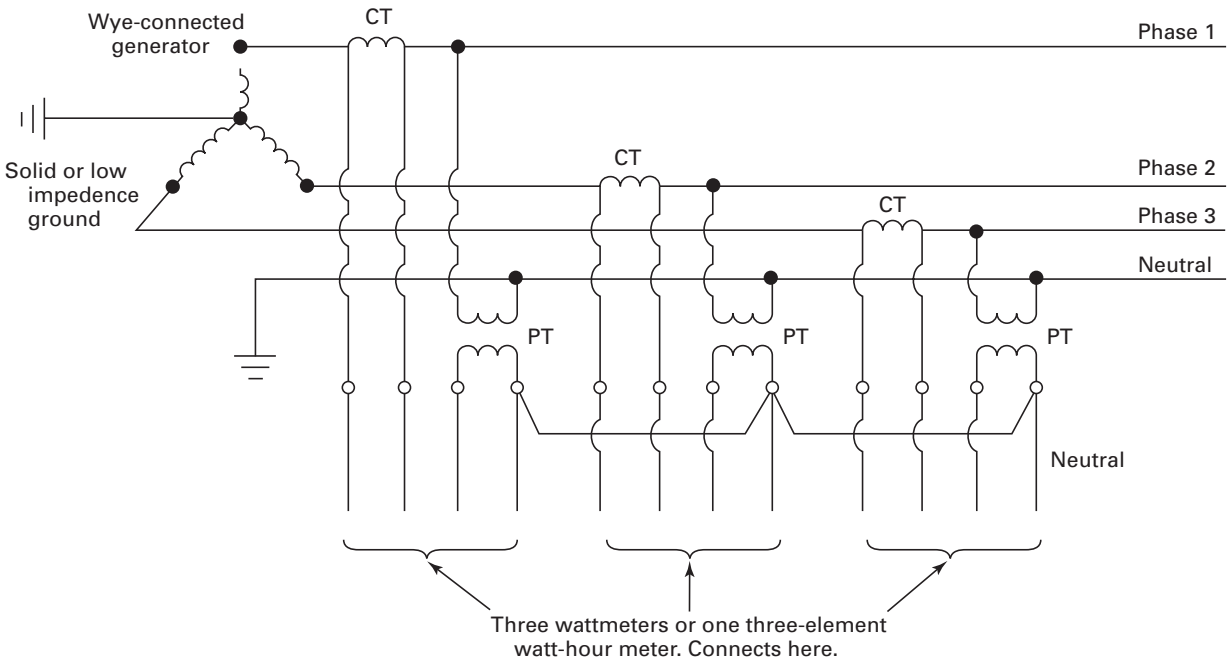

Fig. 4-5.2.2 Three-Meter System for Use on Four-Wire Power Systems

where

PF = power factor
$Watts_t$ = total watts
$Vars_t$ = total vars

Alternatively, for balanced three-phase sinusoidal circuits, power factor may be calculated from the two-meter power measurement method using the following equation:

$$PF = \frac{1}{\sqrt{1 + 3\left[\dfrac{\text{Watts}_{1-2} - \text{Watts}_{3-2}}{\text{Watts}_{1-2} + \text{Watts}_{3-2}}\right]^2}}$$

where

PF = power factor
$Watts_{1\text{-}2}$ = real power phase 1 to 2
$Watts_{3\text{-}2}$ = real power phase 3 to 2

Copyright ASME International
Provided by IHS under license with ASME
No reproduction or networking permitted without license from IHS
Not for Resale

4-5.2.2 Four-Wire Power Systems. A typical four-wire power system is shown in Fig. 4-5.2.2. Also, with the exception of the Open Delta generator connection, all of the three-wire systems described in para. 4-5.2.1 can also be measured using the four-wire measurement system described in this paragraph.

The measurement of power and energy in a four-wire power system is made using three PTs and three CTs as shown in Fig. 4-5.2.2. Several metering devices can be used in connection with these instrument transformers: three watt/var meters, three watt-hour/var-hour meters, or a three-element watt-hour/var-hour meter.

Power factor can be calculated from the watt and var meters using the following equation:

$$PF = \frac{Watts_t}{\sqrt{Watts_t^2 + Vars_t^2}}$$

where

PF = power factor
$Watts_t$ = total watts for three phases
$Vars_t$ = total vars for three phases

Alternatively, power factor may be determined by measuring each phase voltage and current (Volt-Amps) using the following equation:

$$PF = \frac{Watts_t}{\sum V_i I_i}$$

where

PF = power factor
V_i = phase voltage for each of the three phases
I_i = phase current for each of the three phases

4-5.3 Instrument Transformers

Instrument transformers are used to reduce the voltages and current to values that can be conveniently measured, typically to ranges of 120 V and 5 A, respectively. They are also used to insulate the metering instruments from the high potential that may exist on the circuit under test. Instrument transformer practice is described in detail in ANSI/IEEE C57.13-1993, IEEE Standard Requirements for Instrument Transformers.

The impedances in the transformer circuits must be constant during the test. Protective relay devices or voltage regulators shall not be connected to the instrument transformers used for the test. Normal station instrumentation may be connected to the test transformers if the resulting total burden is known and is within the range of calibration data.

4-5.3.1 Potential Transformers. Potential transformers measure either phase-to-phase voltage or phase-to-neutral voltage. The potential transformers serve to convert the line or primary voltage to a lower or secondary voltage safe for metering (typically 120 V for phase-to-phase systems and 69 V for phase-to-neutral systems). For this reason, the secondary voltage measured by the potential transformer must be multiplied by a voltage ratio to calculate the primary voltage that actually exists in the generator.

Correctly rated potential transformers of at least 0.3% accuracy class (metering type) shall be used for the tests. Potential transformers shall be calibrated for correction of ratio and phase angle error prior to the test over the ranges of voltage, current, and burden expected to be experienced during the test. Potential transformer ratio correction factors should be applied for the actual burdens that exist during the test. Actual volt-ampere burdens shall be determined either by calculation from lead impedances or by direct measurement.

Potential transformers are available in several metering accuracy classes. For the measurement of generator output in a combined cycle steam turbine test, at least 0.3% accuracy class potential transformers shall be used. Potential transformers must be calibrated at zero burden (0 VA) and at least one other burden, typically the rated PT burden. Ratio correction factors shall be applied for measured burdens. Corrections for voltage drop of the connecting line should be determined and applied as discussed in Mandatory Appendix I.

4-5.3.2 Current Transformers. The current transformers convert the line or primary current to a lower secondary current safe for metering. For this reason, the secondary current measured by the current transformers must be multiplied by a current ratio to calculate the primary current that actually exists in the generator output wiring.

For the measurement of generator output in a combined cycle steam turbine test, at least 0.3% accuracy class current transformers shall be used. It is recommended that each current transformer should be calibrated at zero external burden (0 VA) and at least one burden that exceeds the maximum expected during the test from zero to rated current.

Ratio and phase-angle correction factors for current transformers may be neglected due to their minimal impact on measurement uncertainty.

4-5.3.3 Instrument Transformer Connections. Connections for voltage- and current-measuring instruments shall be made on the generator side of step-up transformers as close to the generator terminals as possible. Current connections shall be made on the generator side of any external connections of the power circuit by which power can enter or leave this circuit.

The leads to the instruments shall be arranged so that inductance or any other similar cause will not influence the readings. Inductance may be minimized by using twisted and shielded pairs for instrument leads. It is desirable to check the whole arrangement of instruments for stray fields.

To minimize the voltage drop in the voltage circuit, wire gauge shall be chosen considering the length of wiring, the load of the potential transformer circuit, and

Copyright ASME International
Provided by IHS under license with ASME
No reproduction or networking permitted without license from IHS
Not for Resale

the resistance of the safety fuses. The errors due to wiring resistance (including fuses) shall always be taken into account, either by direct voltage drop measurement or by calculation. An illustration of these measurements and corrections is shown in the sample calculation provided in Nonmandatory Appendix A.

4-5.3.4 Precautions in the Use of Instrument Transformers. Current transformer cores may be permanently magnetized by inadvertent operation with the secondary circuit opened, resulting in a change in the ratio and phase-angle characteristics. If magnetization is suspected, it should be removed as described in ANSI/IEEE Standard 120 under "Precaution in the Use of Instrument Transformers."

4-5.3.5 Use of Existing Plant Instrument Transformers. Existing station potential or current transformers may be used for the test if they meet the requirements of this Code.

4-5.4 Electrical Metering Equipment

There are five types of electrical metering equipment that may be used to measure electrical energy.

(a) watt meters
(b) watt-hour meters
(c) var meters
(d) var-hour meters
(e) power factor meters

Single or polyphase metering equipment may be used.

4-5.4.1 Watt Meters. Watt meters measure instantaneous active power. The instantaneous active power must be measured frequently during a test run and averaged over the test run period to determine average power (kilowatts) during the test. Should the total active electrical energy (kilowatt-hours) be desired, the average power must be multiplied by the test duration in hours. Watt meters measuring generator output must have a systematic uncertainty equal to or less than 0.1% of reading and a sampling rate of at least once per minute during the test.

4-5.4.2 Watt-Hour Meters. Watt-hour meters measure cumulative active energy (kilowatt-hours) during a test period. The measurement of watt-hours must be divided by the test duration in hours to determine average active power (kilowatts) during the test period. Watt-hour meters measuring generator output must have an uncertainty equal to or less than 0.1% of reading.

If the resolution of the watt-hour meter output is low, the high inaccuracies can occur over a typical test period. Often watt-hour meters will have an analog or digital output with a higher resolution that may be used to increase the resolution. Some watt-hour meters will often also have a pulse-type output that may be summed over time to determine an accurate total energy during the test period.

For disk-type watt-hour meters with no external output, the disk revolutions can be timed and counted during a test to increase resolution. Some electronic watt-hour meters also display blinking lights or LCD elements that correspond to disk revolutions that can be timed to determine the generator electrical output. In such cases, much higher resolution can be achieved usually by timing a discrete repeatable event (e.g., a certain number of blinks of an LCD or complete rotations of a disk) rather than counting the number of events in a fixed amount of time (e.g., the number of rotations of a disk in 5 min).

4-5.4.3 Var Meters. Var meters measure instantaneous reactive power. The instantaneous reactive power must be measured frequently during a test run and averaged over the test run period to determine average reactive power (kilovars) during the test. Should the total reactive electrical energy (kilovar-hours) be desired, the average power must be multiplied by the test duration in hours.

Var meters measuring generator reactive power must have an uncertainty equal to or less than 0.5% of range and a sampling rate of at least once per minute.

4-5.4.4 Var-Hour Meters. Var-hour meters measure reactive energy (kilovar-hours) during a test period. The measurement of var-hours must be divided by the test duration in hours to determine average reactive power (kilovars) during the test period.

Var-hour meters measuring generator output must have an uncertainty equal to or less than 0.5% of range. The acceptable var-hour meters will have an analog or digital output with a higher resolution or a pulse-type output that may be summed over time to determine an accurate total energy during the test period.

4-5.4.5 Power Factor Meters. Power factor may be measured directly using a three-phase power factor transducer when balanced load and frequency conditions prevail. Power factor transducers must have an uncertainty equal to or less than 0.01 pf of the indicated power factor.

4-5.4.6 Existing Power Plant Instrumentation. Existing station instrumentation may be used for measurement of any of these parameters if it meets all of the requirements of this Code.

4-5.5 Electrical Generation Instrumentation Calibration

4-5.5.1 Watt and Watt-Hour Meter Calibration. Watt and watt-hour meters, collectively referred to as power meters, are calibrated by applying power through the test power meter and a power meter standard simultaneously. Should polyphase metering equipment be used, the output of each phase must be available or the meter must be calibrated with all phases simultaneously in three-phase operating condition.

Portable instruments shall be calibrated in a controlled laboratory environment if there is an indication of a problem with the measurement. The value of the voltage maintained on the potential circuit of the instruments during calibration shall cover the range of ex-

Copyright ASME International
Provided by IHS under license with ASME
No reproduction or networking permitted without license from IHS Not for Resale

pected test values, based on the manufacturer's recommendations for required uncertainty. Polyphase meters, or metering systems that cannot be verified to be made up of separate single-phase meters, shall not be used unless they can be calibrated three-phase.

4-5.5.2 Var and Var-Hour Meter Calibration. To calibrate a var or var-hour factor meter, one must either have a var standard or a wattmeter standard and an accurate phase-angle measuring device. Also, the device used to supply power through the standard and test instruments must have the capability of shifting phase to create several different stable power factors. These different power factors create reactive power over the calibration range of the instrument.

Should a var meter standard be employed, the procedure for calibration outlined above for watt meters should be used. Should a wattmeter standard and phase-angle meter be used, simultaneous measurements from the standard, phase-angle meter, and test instrument should be taken. The var level will be calculated from the average watts and the average phase angle.

Var meters should be calibrated at the electrical line frequency of the equipment under test; that is, do not calibrate meters at 60 Hz and use on 50 Hz equipment. Var meters are particularly sensitive to frequency and should be used within 0.5 Hz of the calibration frequency.

4-5.6 Excitation Power Measurement

If the exciter is powered by current supplied from the main generator bus at a point after the gross electrical output metering, the power supplied to the exciter must be determined.

4-5.6.1 Derivation From Breaker Currents. Exciter power and any other auxiliary steam turbine loads included in the steam turbine vendor scope of supply can be calculated from the current and voltage input to the exciter power transformer or breaker. Since this is a measure of the actual power, which comes off of the main generator bus, this is the preferred method of determining exciter power.

$$ExcLoss = \frac{\sqrt{3} \times V \times A \times PF}{1000}$$

where

$ExcLoss$ = exciter power (KW)
V = average phase-to-neutral field voltage (volts), measured value
A = average phase field current (amps), measured value
PF = power Factor, measured or calculated value
1000 = conversion factor from watts to KW

If the measurement point is downstream of a step-down transformer, a correction should be applied for the transformer loss.

4-5.6.2 Derivation From Field Voltage and Current. Power supplied to the exciter can also be estimated by calculating the power output by the exciter and by correcting for an assumed AC to DC conversion efficiency using the following formula:

$$ExcLoss = \frac{FV \times FC}{1000 \times ACDC}$$

where

$ExcLoss$ = exciter power (KW)
FV = field voltage (volts), measured value
FC = field current (amps), measured value
1000 = conversion factor from watts to KW
$ACDC$ = AC to DC conversion efficiency factor (typically 0.975), assumed value

4-6 DATA COLLECTION AND HANDLING

4-6.1 Introduction

This subsection presents requirements and guidance regarding the acquisition and handling of test data. Also presented are the fundamental elements that are essential to the makeup of an overall data acquisition and handling system.

This Code recognizes that technologies and methods in data acquisition and handling will continue to change and improve over time. If new technologies and methods become available and are shown to meet the required standards stated within this Code, they may be used.

4-6.2 Data Acquisition System

The purpose of a data acquisition system is to collect data and store it in a form suitable for processing or presentation. Systems may be as simple as a person manually recording data to as complex as a digital computer-based system. Regardless of the complexity of the system, a data acquisition system must be capable of recording, sampling, and storing the data within the requirements of the test and target uncertainty set by this Code.

4-6.2.1 Manual System. In some cases, it may be necessary or advantageous to record data manually. It should be recognized that this type of system introduces additional uncertainty in the form of human error and should be accounted for accordingly. Manual systems may require longer periods of time or additional personnel for a sufficient number of samples to be taken due to the limited sampling rate. Care must be taken with the selection of the test period duration to allow for the manual methods to have a sufficient number of samples to coincide with the requirements of the test. Data collection sheets should be prepared prior to the test. The data collection sheets should identify the test site location, date, time, and type of data collected. The data collection sheets should also delineate the sampling

Copyright ASME International
Provided by IHS under license with ASME
No reproduction or networking permitted without license from IHS
Not for Resale

time required for the measurements. Careful recording of the collection times with the data collected should be performed using a digital stopwatch or other sufficient timing device. All errors will be marked through with a single line and initialed and dated by the editor.

4-6.2.2 Automated System. Automated data collection system configurations have a great deal of flexibility. Automated systems are beneficial in that they allow for the collection of data from multiple sources at high frequencies while recording the time interval with an internal digital clock. Rapid sampling rates serve to reduce test uncertainty and test duration. These systems can consist of a centralized processing unit or distributed processing to multiple locations in the plant.

Automated data acquisition systems must be functionally checked after installation. As a minimum, a pretest data run should be performed to verify that the system is operating properly. The setup, programming, channel lists, signal conditioning, operational accuracies, and lists of the equipment making up the automated system should be prepared and supplied in the test report.

4-6.3 Data Management

4-6.3.1 Automatically Collected Data. All automatically collected data should be recorded in its uncorrected, uncalculated state on both permanent and removable medium to permit post-test data correction for application of any necessary calibration corrections. Immediately after test and prior to leaving the test site, copies of the automatically collected data should be made on removable medium and distributed to secure against the chance of such data being accidentally lost, damaged, or modified. Similar steps should be taken with any corrected or calculated results from the test.

4-6.3.2 Manually Collected Data. All manually collected data recorded on data collection sheets must be reviewed for completeness and correctness. Immediately after test and prior to leaving the test site, photocopies of the data collection sheets should be made and distributed among the parties of the test to eliminate the chance of such data being accidentally lost, damaged, or modified.

4-6.3.3 Data Calculation Systems. The data calculation system should have the capability to average each input collected during the test and calculate the test results based on the average values. The system should also calculate standard deviation and coefficient of variance of each instrument. The system should have the ability to locate and eliminate spurious data from being used in the calculation of the average. The system should also have the ability to plot the test data and each instrument reading over time to look for trends and outlying data.

4-6.4 Data Acquisition Systems

4-6.4.1 Data Acquisition System Requirements. Prior to selection of a data acquisition system, it is necessary to have the test procedure in place that dictates the requirements of the system. The test procedure should clearly dictate the type of measurements to be made, number of data points needed, the length of the test, the number of samples required, the frequency of data collection to meet the target test uncertainty set by this Code. This information will serve as a guide in the selection of equipment and system design.

Each measurement loop must be designed with the ability to be loop calibrated and where it can be checked for continuity and power supply problems. To prevent signal degradation due to noise, each instrument cable should be designed with a shield around the conductor and the shield should be grounded on one end to drain any stray induced currents.

4-6.4.2 Temporary Automated Data Acquisition System. This Code encourages the usage of temporary automated data acquisition systems for testing purposes. These systems can be carefully calibrated and their proper operation confirmed in the laboratory, and then they can be transported to the testing area, thus providing traceability and control of the complete system.

Site layout and ambient conditions must be considered when determining the type and application of temporary systems. Instruments and cabling must be selected to withstand or minimize the impact of any stresses, interference, or ambient conditions to which they may be exposed.

4-6.4.3 Existing Plant Measurement and Control System. This Code does not prohibit the use of the plant measurement and control system for code testing. However, the system must meet the requirements set forth in this Code. Caution should be applied with the use of these systems for performance testing by recognizing the limitations and restrictions of these systems.

Most distributed plant control systems apply threshold or dead-band restraints on data signals. This results in data that are only the report of the change in a variable that exceeds a set threshold value. All threshold values must be set low enough so that all data signals sent to the distributed control system during a test are reported and stored.

Most plant systems do not calculate flow rates in accordance with this Code but rather by simplified relationships. This includes, for example, constant discharge coefficient or even expansion factor. A plant system indication of flow rate is not to be used in the execution of this Code, unless the fundamental input parameters are also logged and the calculated flow is confirmed to be in accordance with this Code and ASME PTC 19.5.

Copyright ASME International
Provided by IHS under license with ASME
No reproduction or networking permitted without license from IHS Not for Resale

Section 5
Computation of Results

5-1 FUNDAMENTAL EQUATION

For the steam turbines covered by this Code, the corrected steam turbine output performance is the characteristic that defines the performance of the steam turbine. Because this output is referenced to specified steam flows and conditions, it is indicative of the steam turbine's efficiency. The concept of heat rate is unnecessary for steam turbines in combined cycle, or any other steam turbine for which the power output is specified, at specified steam flows and conditions and, therefore, is not addressed in this Code. The fundamental performance Eq. (5-1) determines the corrected gross steam turbine output and is applicable to any type of steam turbine covered by this Code. Corrected output performance is expressed as

$$P_{\text{corr}} = \left(P_{\text{meas}} + \sum_{i=1}^{n} \Delta_i \right) \tag{5-1}$$

The correction terms Δ_i are differences, expressed in kWs, and are used to correct measured results back to the design-unique set of reference conditions. The sum of the Δ_i values is either added to or subtracted from the measured output depending on the sign convention of the corrections. If the corrections are set up relative to the design point as $\Delta_i = (P_{\text{off-design}} - P_{\text{design}})_i$, the sum of the Δ_i values should be algebraically subtracted from the measured output. If the corrections are set up as $\Delta_i = (P_{\text{design}} - P_{\text{off-design}})_i$, the sum of the Δ_i values should be algebraically added to the measured output. The individual Δ_i values can be either positive or negative depending on the direction of the change in the variable and the sign convention of the curve. Table 5-1 summarizes the corrections used in the fundamental performance equation.

The correction terms that are not applicable to the specific type of steam turbine being tested or to the test objectives are simply set equal to zero.

5-2 DATA REDUCTION

Critical measurements are defined by the applicable corrections and calculation procedures detailed in this Code. Also, secondary measurements may be recorded for backup to critical instruments, instrument verification, monitoring stability or performance of cycle components that affect the steam turbine performance, or mass and energy balance checks. Measurements may be obtained from many acceptable electronic or manual sources as discussed in Section 4.

Collected data requires processing prior to use in performance calculations. Processing begins with compiling and tabulating data, calculating averages or increments over the test period, and finally critical analysis. Processing data in concise tabulated format facilitates analysis and use in calculations. Although data is summarized for analysis and calculations, all original data recordings must be distributed. Refer to ASME PTC 1 for additional discussion. Data summaries should present the following information:

(a) instrument identification tags

(b) a brief description of the measured parameters

(c) engineering units of measure

(d) averaged or incremental value over the test period duration

(e) values converted to common engineering units for use in calculations may also be presented (such as psig converted to psia)

(f) number of recordings for each instrument during the test period

(g) precision error or standard deviation of each measurement

Data processing may also include application of calibration offsets, or corrections.

The data must be analyzed prior to computation of results. Analysis can indicate measurement or operational instability, measurement outliers, discontinuities, instrument or recording errors, or other anomalies. Analysis will also determine if permissible deviations of critical parameters are met. Data analysis may indicate measurements that require correction such as calibration offsets, water leg adjustments, or adjustments due to incorrect raw signal processing by the recording software. Graphical analysis of individual recordings can be helpful in evaluating discontinuities, missing data, or comparisons of similar measurements. ASME PTC 1 provides further guidance on data evaluation and graphical analysis.

5-3 CORRECTION OF TEST RESULTS TO SPECIFIED CONDITIONS

Tests shall be conducted with the smallest possible deviation from specified conditions to minimize correction errors.

Copyright ASME International
Provided by IHS under license with ASME
No reproduction or networking permitted without license from IHS
Not for Resale

Table 5-1 Application of Corrections

Symbol	Description	Comment
Δ_{1A}	HP steam flow	For floating inlet pressure applications
Δ_{1B}	HP steam flow	For controlled inlet pressure applications
Δ_{2A}	HP steam temperature	For floating inlet pressure applications
Δ_{2B}	HP steam temperature	For controlled inlet pressure applications
Δ_{3A}	HP turbine flow capacity (also called corrected throttle flow)	For floating inlet pressure applications
Δ_{3B}	HP steam pressure	For controlled inlet pressure applications
Δ_4	Valve loop	For controlled inlet pressure applications in which the reference case and corrections are on a valve-best-point basis
Δ_5	Reheater system pressure drop	If a reheat cycle
Δ_6	Reheat steam temperature and net reheat steam flow change	If a reheat cycle
Δ_7	HP exhaust enthalpy effect on reheater heat consumption	If a reheat cycle
Δ_8	HP exhaust flow effect on reheater heat consumption	If a reheat cycle
Δ_9	Induction flow and enthalpy	. . .
Δ_{10}	Induction pressure	If induction pressure is controlled by control valves internal to the turbine
Δ_{11}	Extraction flow	. . .
Δ_{12}	Extraction pressure	If extraction pressure is controlled by control valves internal to the turbine
Δ_{13}	Exhaust pressure	. . .
Δ_{14}	Power factor	. . .
Δ_{15}	Generator cooling gas pressure	. . .

5-3.1 Description of Correction Formulations

A set of correction values is calculated by changing only one variable at a time and calculating a correction for each value of that variable within a defined range. If one were to graph that set of corrections, one would have a single curve depicting the correction as a function of the variable. If one were to determine an algebraic equation to represent that set of corrections, one would have a single equation in only one variable.

Several corrections are bivariate, requiring the formulation to be a function of two variables. To create a bivariate formulation, several sets of correction values are created as described above by varying only one variable within a set. The second variable is changed between sets. If one were to graph this bivariate formulation, the multiple sets of corrections would make up a family of curves for which the second variable is constant along any one curve but is different between curves. If one were to determine algebraic equations, one could either create a single equation in two variables or multiple single-variable equations with each equation giving the corrections at a different value of the second variable.

All corrections are created as a difference expressed in kilowatts.

To avoid errors of graphical interpretation of correction curves, it is necessary to provide a table of the data points that reflects the response of the dependent variable to the independent variable over a defined range. It is also recommended that equations and/or graphical representations be supplied.

5-3.1.1 HP Steam Flow (Floating Pressure Applications). The HP steam flow correction formulation is bivariate with reheat temperature for reheat cycles. Otherwise it is univariate. For turbines operated in floating pressure mode at VWO (i.e., with the HP control valves 100% open), this correction formulation is created by varying HP steam flow while holding all of the turbine input variables listed in Table 5-3.1.1 constant, including the HP steam temperature, HP turbine flow capacity, and valve position (100%). Because flow capacity and temperature are held constant, the HP steam pressure will necessarily vary as the HP steam flow varies. The magnitude of the HP steam flow correction also depends on the reheat temperature. In the bivariate formulation, HP steam flow is the independent variable and reheat temperature is the interacting variable following the format shown in Example 1 (see para. 5-3.2.1).

5-3.1.2 HP Steam Flow (Controlled Pressure Applications). The HP steam flow correction formulation is bivariate with reheat temperature for reheat cycles. Otherwise it is univariate. For turbines operating in controlled inlet pressure mode (at a particular HP steam pressure, i.e., with the HP control valves modulated to achieve the

Copyright ASME International
Provided by IHS under license with ASME
No reproduction or networking permitted without license from IHS
Not for Resale

Table 5-3.1.1 Correction Formulations

Description	Comment
HP steam flow	For floating inlet pressure applications
HP steam flow	For controlled inlet pressure applications
HP steam temperature	For floating inlet pressure applications
HP steam temperature	For controlled inlet pressure applications
HP turbine flow capacity (also called corrected throttle flow)	For floating inlet pressure applications
HP steam pressure	For controlled inlet pressure applications
Valve loop	For controlled inlet pressure applications in which the reference case and corrections are on a valve-best-point basis
Reheater system pressure drop	If a reheat cycle
Reheat steam temperature and net change in reheat steam flow	If a reheat cycle
HP exhaust enthalpy effect on reheater heat consumption	If a reheat cycle; uses HP steam flow correction formulation
HP exhaust flow effect on reheater heat consumption	If a reheat cycle; uses reheat steam temperature and net change in reheat steam flow correction formulation
Induction [Note (1)] flow and enthalpy	. . .
Induction pressure	If induction pressure is controlled by control valves internal to the turbine
Extraction flow	. . .
Extraction pressure	If extraction pressure is controlled by control valves internal to the turbine
Exhaust pressure	. . .
Power factor	. . .
Generator cooling gas pressure	. . .

NOTE:
(1) *Admission* is a commonly used synonym for *induction*; the terms may be used interchangeably in the context of this Code.

desired pressure at the test HP flow and temperature), this correction formulation is created by varying HP steam flow while holding all of the turbine input variables listed in Table 5-3.1.1 constant, including the HP steam temperature and HP steam pressure. Because pressure and temperature are held constant, the control valve position will necessarily vary as the HP steam flow varies. The magnitude of the HP steam flow correction also depends on the reheat temperature. In the bivariate formulation, HP steam flow is the independent variable and reheat temperature is the interacting variable following the format shown in Example 1 (see para. 5-3.2.1).

5-3.1.3 HP Steam Temperature (Floating Pressure Applications). The HP steam temperature correction formulation is bivariate with HP steam flow. For turbines operated in floating pressure mode, the correction is created by varying HP steam temperature while holding all of the turbine input variables listed in Table 5-3.1.1 constant, including the HP steam flow, HP turbine flow capacity, and valve position (100%). Because flow capacity and flow are held constant, the HP steam pressure will necessarily vary as the HP steam temperature varies. The magnitude of the HP steam temperature correction also depends on the HP steam flow. In the bivariate formulation, the HP steam temperature is the independent variable and HP steam flow is the interacting variable following the format shown in Example 1 (see para. 5-3.2.1).

5-3.1.4 HP Steam Temperature (Controlled Pressure Applications). The HP steam temperature correction formulation is bivariate with HP steam flow. For turbines operating in controlled inlet pressure mode, the correction is created by varying HP steam temperature while holding all of the turbine input variables listed in Table 5-3.1.1 constant, including the HP steam flow and HP steam pressure. Because pressure and flow are held constant, the valve position will necessarily vary as the HP steam temperature varies. The magnitude of the HP steam temperature correction also depends on the HP steam flow. In the bivariate formulation, the HP steam temperature is the independent variable and HP steam flow is the interacting variable following the format shown in Example 1 (see para. 5-3.2.1).

5-3.1.5 HP Turbine Flow Capacity (Floating Pressure Applications). The HP turbine flow capacity correction formulation is bivariate with HP steam flow. For turbines operated in floating pressure mode, the correction is created by varying HP turbine flow capacity while

Copyright ASME International
Provided by IHS under license with ASME
No reproduction or networking permitted without license from IHS Not for Resale

holding all of the turbine input variables listed in Table 5-3.1.1 constant, including the HP steam flow, HP steam temperature, and valve position (100%). Because flow and temperature are held constant, the HP steam pressure will necessarily vary as the HP turbine flow capacity varies. The magnitude of the HP turbine flow capacity correction also depends on the HP steam flow. In the bivariate formulation, the HP turbine flow capacity is the independent variable and the HP steam flow is the interacting variable following the format shown in Example 1 (see para. 5-3.2.1). Since the units of measure of the steam turbine flow capacity (independent variable) and the actual steam turbine flow (interacting variable) are the same (mass flow rate), it is recommended that the steam turbine flow capacity be represented in this formulation as a percentage change from the reference flow capacity to help avoid confusion.

5-3.1.6 HP Steam Pressure (Controlled Pressure Applications). The HP steam pressure correction formulation is bivariate with HP steam flow. For turbines operating in controlled inlet pressure mode, the correction is created by varying HP steam pressure while holding all of the turbine input variables listed in Table 5-3.1.1 constant, including the HP steam flow and HP steam temperature. Because flow and temperature are held constant, the valve position will necessarily vary as the HP steam pressure varies. The magnitude of the HP steam pressure correction also depends on the HP steam flow. In the bivariate formulation, the HP steam pressure is the independent variable and the HP steam flow is the interacting variable following the format shown in Example 1 (see para. 5-3.2.1).

5-3.1.7 Valve Loop (Controlled Pressure Applications). The valve loop correction formulation is bivariate with HP steam flow. This correction applies to cases in which the reference case and the correction formulation have been created on a valve-best-point basis, and the performance test cannot be conducted at a valve point. The correction is created by comparing the valve-best-point performance to the actual-valve-loop performance at constant flow and temperature. Because flow and temperature are held constant and the valve position varies for different points in the formulation, the HP pressure will necessarily vary at these different points also. The magnitude of the valve loop correction also depends on the HP steam flow. In the bivariate formulation, the HP throttle flow ratio is the independent variable and the HP steam flow is the interacting variable following the format shown in Example 1 (see para. 5-3.2.1). The HP throttle flow ratio is defined as the ratio of the corrected HP steam flow at a particular valve position divided by the corrected HP steam flow at 100% valve position. The corrected throttle flow is calculated using the equation in para. 5-3.3.3. For turbines with multiple inlet control valves that open sequentially, this formulation should have nonsmooth inflection points at the valve points, with the correction being 0 at the throttle flow ratio where the valve points occur.

5-3.1.8 Reheater System Pressure Drop. The reheater system pressure drop correction formulation is bivariate with HP steam flow. The correction is created by varying reheater system pressure drop (expressed as a percentage of the HP exhaust pressure) while holding each of the turbine input variables listed in Table 5-3.1.1 constant. The magnitude of the reheater system pressure drop correction also depends on the HP steam flow. In the bivariate formulation, the reheater system pressure drop is the independent variable and the HP steam flow is the interacting variable following the format shown in Example 1 (see para. 5-3.2.1).

5-3.1.9 Reheat Steam Temperature and Net Change in Reheat Steam Flow (for Reheat Cycles). The reheat steam temperature and the net change in reheat steam flow corrections are handled in the same formulation. Typically, the net reheat steam flow change is the change in the sum of the IP steam induction and the reheat spray flows. If there are any process flows extracted from the reheat system between the HP exhaust and the IP inlet, these flows should be subtracted to determine the net flow added to the cold reheat steam. The correction is created by varying IP induction flow while holding each of the turbine input variables listed in Table 5-3.1.1 constant, including reheat temperature. Calculating these corrections at reference reheat temperature gives a set of corrections with a value of 0 kW correction at the rated IP induction + reheat spray flow − reheat process flow. Additional sets of corrections should be created by running the performance model across a range of IP induction flows and at reheat temperatures above the reference temperature and below the reference temperature. The reference output for calculating the change in output correction factor is always the output at rated reheat temperature and net change in reheat steam flow. In the bivariate formulation, the net change in reheater steam flow is the first independent variable and the reheat temperature is the second independent variable following the format shown in Example 2 (see para. 5-3.2.2).

5-3.1.10 HP Exhaust Enthalpy Effect on Reheater Heat Consumption. The correction for the effect of HP exhaust enthalpy on reheater heat consumption uses the HP steam flow correction formulation. For further explanation see para. 5-3.3.8.

5-3.1.11 HP Exhaust Flow Effect on Reheater Heat Consumption. The correction for the effect of HP exhaust flow on reheater heat consumption uses the HP steam flow correction formulation or the reheat steam temperature and net change in reheat steam flow correction formulation. For further explanation see para. 5-3.3.9.

5-3.1.12 Induction Flow and Enthalpy. The induction flow and enthalpy corrections are handled in the

Copyright ASME International
Provided by IHS under license with ASME
No reproduction or networking permitted without license from IHS Not for Resale

same formulation. The correction is created by varying induction flow while holding each of the turbine input variables listed in Table 5-3.1.1 constant, including induction enthalpy. Calculating these corrections at reference induction enthalpy gives a set of corrections with a value of 0 kW correction at the rated induction flow. Additional sets of corrections should be created by running the performance model across a range of induction flows and at induction enthalpies above the reference enthalpy and below the reference enthalpy. The reference output for calculating the change in output correction factor is always the output at rated induction flow and enthalpy. In the bivariate formulation, the induction flow is the first independent variable and the induction enthalpy is the second independent variable following the format shown in Example 2 (see para. 5-3.2.2).

5-3.1.13 Induction Pressure (if Induction Pressure Is Controlled by Valves Internal to the Steam Turbine). The induction pressure correction formulation is bivariate with total flow through the internal induction valves. The correction is created by varying induction pressure while holding each of the turbine input variables listed in Table 5-3.1.1 constant, including induction flow and enthalpy. Because flow and enthalpies are held constant, the induction valve position will necessarily vary as the induction steam pressure varies. The magnitude of the induction pressure correction also depends on the total steam flow through the internal induction valves (the sum of HP steam flow, all induction flows upstream of and including the induction port in question, less any upstream extractions and gland leakages). Thus, a bivariate formulation at different total induction stage steam flows is created by running the performance model across a range of induction pressures and at HP steam flows above and below the rated HP steam flow (holding the induction flow constant). In the bivariate formulation, the induction pressure is the independent variable and total flow through the internal induction valves is the interacting variable following the format shown in Example 1 (see para. 5-3.2.1).

5-3.1.14 Extraction Flow. The extraction flow correction is univariate. The correction is created by varying extraction flow while holding each of the turbine input variables listed in Table 5-3.1.1 constant.

5-3.1.15 Extraction Pressure (if Extraction Pressure Is Controlled by Valves Internal to the Steam Turbine). The extraction pressure correction formulation is bivariate with total flow through the internal extraction valves. The correction is created by varying extraction pressure while holding each of the turbine input variables listed in Table 5-3.1.1 constant, including extraction flow. Because flows are held constant, the extraction valve position will necessarily vary as the extraction steam pressure varies. The magnitude of the extraction pressure correction also depends on the total steam flow through the internal extraction valves (the sum of HP steam flow and all upstream induction flows, less all extractions upstream of and including the extraction in question and gland leakages). Thus, a bivariate formulation at different total extraction stage steam flows is created by running the performance model across a range of extraction pressures and at HP steam flows above and below the rated HP steam flow (holding the extraction flow constant). In the bivariate formulation, the extraction pressure is the independent variable and total flow through the internal extraction valves is the interacting variable following the format shown in Example 1 (see para. 5-3.2.1).

5-3.1.16 Exhaust Pressure. The exhaust pressure correction formulation is bivariate with exhaust steam flow. The correction is created by varying exhaust pressure while holding each of the turbine input variables listed in Table 5-3.1.1 constant. The magnitude of the exhaust pressure correction also depends on the exhaust steam flow. In the bivariate formulation, the exhaust pressure is the independent variable and the exhaust steam flow is the interacting variable following the format shown in Example 1 (see para. 5-3.2.1).

5-3.1.17 Power Factor. The power factor correction is calculated from a formulation of generator losses. The correction is created by determining generator losses at various output and at a constant power factor. The losses also depend on power factor. Therefore, a set of corrections at different power factors should be calculated by running a model of the generator losses at different outputs and at power factors that encompass the reference power factor and the expected test power factor.

5-3.1.18 Generator Cooling Gas Pressure. The generator cooling gas pressure correction is calculated from generator losses. The correction is created by varying the cooling gas (typically either hydrogen or air) pressure while holding the turbine input variables listed in Table 5-3.1.1 constant. Since this correction is linear and often very small, a simple linear formulation is often used. This relationship might express the change in output per unit of change of gas pressure.

5-3.2 Bivariate Corrections

The following two examples show how to calculate the corrections for two different types of bivariate correction formulations.

5-3.2.1 Example 1. This example shows how the points were calculated on a bivariate correction that accounts for the impact of an interacting variable on the effect of the independent variable on the turbine output. Table 5-3.2.1 represents the hypothetical output from a turbine performance modeling program at four different cases used to calculate four points in a bivariate cor-

Copyright ASME International
Provided by IHS under license with ASME
No reproduction or networking permitted without license from IHS
Not for Resale

Table 5-3.2.1 Output From a Turbine Performance Modeling Program, Example 1

Case	Independent Variable	Interacting Variable	Output
1 (reference case)	W1	T1	E1
2	W2	T1	E2
3	W1	T2	E3
4	W2	T2	E4

Correction Values

	Interacting Variable	
Independent Variable	T1	T2
W1	D1, 1 = E1 − E1 = 0	D1, 2 = E3 − E3 = 0
W2	D2, 1 = E2 − E1	D2, 2 = E4 − E3

Table 5-3.2.2 Output From a Turbine Performance Modeling Program, Example 2

Case	First Variable	Second Variable	Output
1 (reference case)	W1	T1	E1
2	W2	T1	E2
3	W1	T2	E3
4	W2	T2	E4

Correction Values

	Second Variable	
First Variable	T1	T2
W1	D1, 1 = E1 − E1 = 0	D1, 2 = E3 − E1
W2	D2, 1 = E2 − E1	D2, 2 = E4 − E1

rection formulation. The independent correction variable is the variable for which the major effect on output is calculated. The interacting correction variable is the variable for which there is a significant interaction with the independent variable. Cases 1 and 2 are used for a point on line T1 and cases 3 and 4 are used for a point on the line T2; see Fig. 5-3.2.1.

5-3.2.2 Example 2. This example shows how the points were calculated on a bivariate correction that simultaneously accounts for the impact of two independent variables on the turbine output. Table 5-3.2.2 represents the hypothetical output from a turbine performance modeling program at four different cases used to calculate four points in a bivariate correction formulation. A correction for a variation in variable T is given by the correction value at the reference value of variable W. A correction for a variation in variable W is given by the correction value at the reference value of variable T. The correction value at nonreference values of both W and T gives the correction to output for simultaneous changes in W and T. See Fig. 5-3.2.2.

5-3.3 Application of Corrections

Table 5-1 and paras. 5-3.3.1 through 5-3.3.16 describe in detail the application of the corrections required for the majority of turbine cycle applications intended to be addressed by this Code. It is possible that additional corrections may be required due to cycle configurations not considered here. In such cases, the appropriate correction formulations and correction factors must be determined consistent with the methods presented here.

This paragraph differs from para. 5-3.1 in that it describes how to determine the corrections for a particular test using the correction formulations created in accordance with para. 5-3.1. For many of the corrections, the method to determine the correction for a particular test might be considered obvious and not warranting explanation. However, for others, the method to determine the correction is not obvious and not simple. Therefore, for the sake of completeness, all corrections are described in this paragraph. Also, see Table 5-3.3 for the terms used for flow capacity correction.

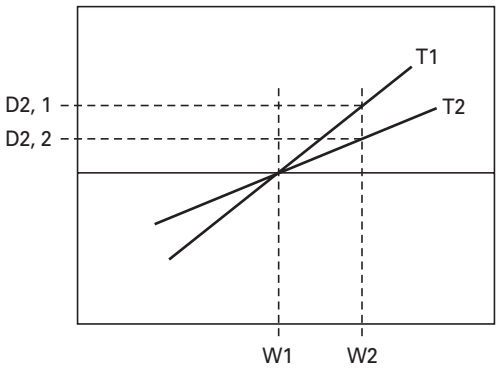

Fig. 5-3.2.1 Illustration of a Correction Curve With Independent and Interacting Variables

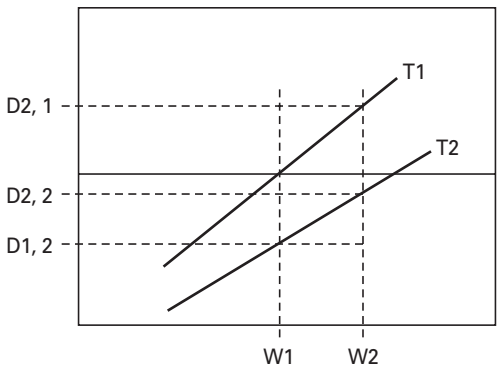

Fig. 5-3.2.2 Illustration of a Correction Curve With Two Independent Variables

Copyright ASME International
Provided by IHS under license with ASME
No reproduction or networking permitted without license from IHS
Not for Resale

Table 5-3.3 Terms Used for Flow Capacity Correction

Reference	Test	Corrected	Definition
w_{HP}	...	w''_{HP}	HP flow capacity
$\dot{m}_{HP}$	$\dot{m}'_{HP}$	...	HP steam flow
$\dot{m}_{IP}$	$\dot{m}'_{IP}$	...	IP induction steam flow
p_{HP}	p'_{HP}	...	HP steam pressure
p_{HPe}	p'_{HPe}	...	HP exhaust steam pressure
v_{HP}	v'_{HP}	...	HP steam pressure
Δp_{Rht}	$\Delta p'_{Rht}$	...	Reheater pressure drop
T_{HP}	T'_{HP}	...	HP steam temperature (in absolute temperature scale of Kelvin or Rankine)
T_{HRH}	T'_{HRH}	...	Hot reheat steam temperature (in absolute temperature scale of Kelvin or Rankine)

5-3.3.1 Δ_{1A} or Δ_{1B} (HP Steam Flow). The bivariate HP steam flow correction employs HP steam flow as the independent variable and the reheat temperature as the interacting variable for reheat cycles. The measured HP steam flow into the steam turbine and the measured reheat temperature (for reheat cycles) should be used to determine the correction from the formulation.

5-3.3.2 Δ_{2A} or Δ_{2B} (HP Steam Temperature). The bivariate HP steam temperature correction employs HP steam temperature as the independent variable and HP steam flow as the interacting variable. The measured HP steam temperature and the measured HP steam flow into the turbine should be used to determine the correction from the formulation.

5-3.3.3 Δ_{3A} (HP Turbine Flow Capacity for Floating Pressure Applications). The bivariate HP turbine flow capacity correction employs the HP turbine flow capacity as the independent variable and the HP steam flow as the interacting variable. The test HP turbine flow capacity corrected to reference conditions and the measured HP steam flow into the turbine should be used to determine the correction from the formulation. The test flow capacity should be expressed relative to the reference HP steam pressure and temperature and should be corrected to reference conditions. Stodola's Law of the Ellipse should be used to account for the influence of off-design operation on the flow capacity. Although the complete correct solution using Stodola's Law of the Ellipse would require an iterative solution, the iterations are neglected in this application due to the negligible difference between the first solution and the completely converged iterative solution.

$$w_{HP} = \dot{m}_{HP}$$

$$w''_{HP} = \dot{m}'_{HP} \frac{\sqrt{\dfrac{p_{HP}}{v_{HP}}}}{\sqrt{\dfrac{p'_{HP}}{v'_{HP}}}} S$$

S is the correction to the test flow capacity for Stodola's Law of the Ellipse.

$$S = \frac{\sqrt{1 - \left(\dfrac{p'_{HPe}}{p'_{HP}} \times \dfrac{1 - \Delta p'_{Rht}}{1 - \Delta p_{Rht}} \times \dfrac{1 + \dfrac{\dot{m}_{IP}}{\dot{m}_{HP}}}{1 + \dfrac{\dot{m}'_{IP}}{\dot{m}'_{HP}}} \right)^2 \times \dfrac{T'_{HP}}{T_{HP}} \times \dfrac{T_{HRH}}{T'_{HRH}}}}{\sqrt{1 - \left(\dfrac{p'_{HPe}}{p'_{HP}} \right)^2}}$$

5-3.3.4 Δ_{3B} (HP Steam Pressure for Controlled Pressure Applications). The bivariate HP steam pressure correction employs the HP steam pressure as the independent variable and the HP steam flow as the interacting variable. The measured HP steam pressure and the measured HP steam flow into the turbine should be used to determine the correction from the formulation.

5-3.3.5 Δ_4 (Valve Loop for Controlled Pressure Applications). The valve loop correction is applicable in cases for which the reference output is based on valve-best-point performance and the test is not conducted at a valve point. The bivariate valve loop correction employs the HP throttle flow ratio as the independent variable and the HP steam flow as the interacting variable. The calculated test throttle flow ratio and the measured HP steam flow into the turbine should be used to determine the correction from the formulation. Since the throttle flow ratios at which the valve points occur for the installed turbine often differ somewhat from the predicted throttle flow ratio at the valve points, it is recommended that abbreviated tests be conducted to determine the actual throttle flow ratios at the valve points immediately above and immediately below the test throttle flow ratio. The throttle flow ratio at which these valve points occur in the correction formulation should be rescaled such that the throttle flow ratios at the valve points in the formulation are equal to these measured throttle flow ratios at the next higher and next lower valve points determined by tests.

5-3.3.6 Δ_5 (Reheater System Pressure Drop). The bivariate reheater system pressure drop correction employs the reheater system pressure drop as the independent variable and the HP steam flow as the interacting variable. The measured reheater system pressure drop (expressed as a percentage of HP exhaust pressure) and the measured HP steam flow into the turbine should be used to determine the correction from the formulation.

5-3.3.7 Δ_6 (Reheat Steam Temperature and Net Change in Reheat Steam Flow). The bivariate correction for the net change in reheat steam flow and the reheat temperature employ the net change in reheat steam flow as the first independent variable and the reheat steam temperature as the second independent variable. The measured reheat temperature and the sum of the

Copyright ASME International
Provided by IHS under license with ASME
No reproduction or networking permitted without license from IHS
Not for Resale

measured IP induction flow and the measured reheat spray flow, less any reheat system process flows, should be used to determine the correction from the formulation.

5-3.3.8 Δ_7 (HP Exhaust Enthalpy Effect on Reheater Heat Consumption). For reheat steam turbines, the efficiency of the HP turbine section and the flow capacity of the IP section affect the enthalpy at the HP exhaust. Since the HP exhaust flow must pass through the reheater to be heated up to the reheat temperature, changes in the HP exhaust enthalpy will affect the reheater heat consumption. This change in reheat heat consumption is not accounted for in any other corrections and, therefore, must be accounted for in this correction such that the resulting corrected output performance appropriately reflects steam turbine output at reference heat consumption. The change in reheat heat consumption due to changes in HP exhaust enthalpy is converted to a change in HP steam flow, and a correction is determined using this change in HP steam flow and the HP steam flow correction formulation.

$$\Delta\dot{m}_{HP1} \equiv \frac{\dot{m}_{HP}(1-f')(\Delta h_{HPe} - \Delta h_{HRH}) - \dot{m}_{IP}(\Delta h_{HRH})}{(1-f')(h_{HRH} + \Delta h_{HRH} - h_{HPe} - \Delta h_{HPe}) + (h_{HP} - h_{BLRi})}$$

See Appendix I for a derivation and definition of terms for $\Delta\dot{m}_{HP1}$.

The correction term Δ_7 is taken from the bivariate HP steam correction formulation using the reference reheat steam temperature (T_{HRH}) and the reference HP steam flow less the change in HP steam flow shown above ($\dot{m}_{HP} - \Delta\dot{m}_{HP1}$).

5-3.3.9 Δ_8 (HP Exhaust Flow Effect on Reheater Heat Consumption). For reheat steam turbines, any flows taken out of the main steam flow between the inlet to the HP turbine and the exit of the HP turbine (e.g., shaft packing leak-offs, mid-span HP/IP flows or cooling flows) affect the HP exhaust flow. Since the HP exhaust flow must pass through the reheater to be heated up to the reheat temperature, changes in the HP exhaust flow will affect the reheater heat consumption. This change in reheat heat consumption is not accounted for in any other corrections and, therefore, must be accounted for in this correction such that the resulting corrected output performance appropriately reflects steam turbine output at reference heat consumption. The change in reheat heat consumption due to changes in HP exhaust flow is converted either to a change in HP steam flow or a change in reheat spray flow. A correction is determined using this change in either HP steam flow or reheat spray flow and either the HP steam flow correction formulation or the reheat temperature and net change in reheat steam flow correction formulation.

If the difference between the test HP loss fraction and the reference HP loss fraction ($f' - f$) is less than zero, then the correction term Δ_8 is taken from the HP steam correction formulation using the reference reheat steam temperature (T_{HRH}) and the reference HP steam flow less the change in HP steam flow ($\dot{m}_{HP} - \Delta\dot{m}_{HP2}$).

$$\Delta\dot{m}_{HP2} \equiv \frac{\dot{m}_{HP}(f'-f)(h_{HRH} - h_{HPe})}{(1-f')(h_{HRH} + \Delta h_{HRH} - h_{HPe} - \Delta h_{HPe}) + (h_{HP} - h_{BLRi})}$$

See Appendix I for a derivation and definition of terms for $\Delta\dot{m}_{HP2}$.

If the difference between the test HP loss fraction and the reference HP loss fraction ($f' - f$) is greater than zero, then the correction term Δ_8 is taken from the reheat temperature and net change in reheat steam flow correction formulation using the reference reheat steam temperature (T_{HRH}) and the sum of the reference IP induction + reheat spray flow (less reheat process flows if present) less the change in reheat spray flow ($\dot{m}_{IP} - \Delta\dot{m}_{RHTspray}$).

$$\Delta\dot{m}_{RHTspray} \equiv \dot{m}_{HP}\ \frac{(f'-f)(h_{HRH} - h_{HPe})}{(h_{HRH} + \Delta h_{HRH} - h_{BLRi})}$$

See Appendix I for a derivation and definition of terms for $\Delta\dot{m}_{RHTspray}$.

5-3.3.10 Δ_9 (Induction Flow and Enthalpy). The bivariate correction for the induction flow and enthalpy employs induction flow as the first independent variable and induction enthalpy as the second independent variable. The measured induction flow and the calculated induction enthalpy should be used to determine the correction from the formulation. The induction enthalpy should be calculated from the induction pressure and temperature, both measured either a short distance upstream of the induction stop and control valves or downstream of the induction stop and control valves.

5-3.3.11 Δ_{10} (Induction Pressure). The induction pressure correction is valid only in cases in which the induction pressure is controlled by valves internal to the steam turbine. The induction pressure correction employs the induction pressure as the independent variable and the flow through the internal induction valves as the interacting variable. The measured induction pressure and the test flow through the induction valves should be used to determine the correction from the formulation. Since the test flow through the internal induction valves cannot be measured directly, it should be calculated as the sum of HP steam flow, all induction flows upstream of and including the induction port in question, less any upstream extractions and gland leakages. (If the gland leakage flows are not measured, the value can be determined from the reference heat balance diagram.)

5-3.3.12 Δ_{11} (Extraction Flow). The extraction flow correction is taken from the extraction flow correction formulation using the measured extraction flow. The correction curve is univariate.

Copyright ASME International
Provided by IHS under license with ASME
No reproduction or networking permitted without license from IHS Not for Resale

5-3.3.13 Δ_{12} (Extraction Pressure). The extraction pressure correction is valid only in cases in which the extraction pressure is controlled by valves internal to the steam turbine. The extraction pressure correction employs the extraction pressure as the independent variable and the flow through the internal extraction valves as the interacting variable. The measured extraction pressure and the test flow through the extraction valves should be used to determine the correction from the formulation. Since the test flow cannot be measured directly, it should be calculated as the sum of HP steam flow and all upstream induction flows, less all extractions upstream of and including the extraction in question and gland leakages. (If the gland leakage flows are not measured, the value can be determined from the reference heat balance diagram.)

5-3.3.14 Δ_{13} (Exhaust Pressure). The exhaust pressure correction employs the exhaust pressure as the independent variable and the exhaust flow as the interacting variable. The measured exhaust pressure and the test turbine exhaust flow should be used to determine the correction from the formulation. Since the exhaust flow cannot be measured directly, it should be calculated as the sum of the HP steam flow, the IP induction flow, the reheat spray flow, and the LP induction flow, less the sum of all extraction flows and the gland seal steam flows not admitted back into the steam turbine. (If the steam seal flows are not measured, the value can be determined from the reference heat balance diagram.)

5-3.3.15 Δ_{14} (Power Factor). The power factor correction is taken from the generator loss formulation using the measured generator power factor and the measured generator output. The correction is the difference between the losses at test output and test power factor and the losses at test output and reference power factor.

5-3.3.16 Δ_{15} (Generator Cooling Gas Pressure). The cooling gas pressure correction is taken from the generator cooling gas pressure correction formulation using the measured cooling gas pressure. If the cooling gas pressure correction was given as a linear relationship between the change in output and the change in cooling gas pressure, then the correction is calculated by multiplying the ratio of the change in output per unit of change in pressure by the difference between the test pressure and the reference pressure.

5-4 UNCERTAINTY ANALYSIS

5-4.1 Introduction to Test Uncertainty

Test uncertainty is an estimate of the limit of error of a test result. It is the interval about a test result that contains the true value with a given probability or level of confidence. It is based on calculations involving probability theory, instrumentation information, calculation procedure, and actual test data. ASME PTC 19.1 is the Performance Test Code Supplement that covers general procedures for the calculation of test uncertainty. Uncertainty will be calculated for a 95% level of confidence. This means that there is a 95% probability that the true value of performance lies within the uncertainty interval. It also means that there is a 2.5% probability that the true value lies below the lower level and a 2.5% probability that it lies above the upper level of the interval.

5-4.2 Inputs for an Uncertainty Analysis

To perform an uncertainty analysis on the corrected gross steam turbine output in a combined cycle application, two sets of inputs are required.

5-4.2.1 Estimates of the Uncertainties of Each of the Required Measurements. Two types of uncertainties make up the total uncertainty.

(a) Random or Precision Error. Due principally to the nonrepeatability of the measurement system, the random error varies during repeated measurements. It may be reduced by increasing both the number of instruments used to measure a given parameter and the number of readings taken.

(b) Systematic or Fixed Error. This is usually an accumulation of individual errors not eliminated through calibration. It is a constant value despite repeated measurements and is frequently difficult to quantify.

The total uncertainty is calculated from the root sum square of the random and systematic components [see ASME PTC 19.1, Eq. (4.5)]

5-4.2.2 Sensitivity Coefficients. Each of the parameters measured has an influence on corrected gross steam turbine power output. These sensitivities are a function of the steam turbine design and can be calculated based on the correction procedure described in subsection. 5-3.

5-4.3 Error Sources

It is necessary to identify the error sources that affect the test result and to characterize them as systematic or random. Error sources may be grouped into the following categories:

(a) Calibration error is the residual error that is not calibrated out by the calibration process.

(b) Installation error is the error that is introduced due to actual installation being nonideal.

(c) Data acquisition error is introduced by the use of a data acquisition system that is used to collect the data. Analog to digital conversion of data introduces this error.

(d) Data reduction error is introduced due to truncation, round-off, and approximate solution errors that are introduced by the use of computers. This error is usually small. The main source of this error is improper curve fitting. To reduce data reduction errors due to nonlinearity, each measured value should be converted individually.

(e) An error of method is introduced as a result of sampling errors.

Copyright ASME International
Provided by IHS under license with ASME
No reproduction or networking permitted without license from IHS
Not for Resale

(f) An error of correction methodology is introduced by the use of correction formulations in place of a computer modeling test analysis due to the fact that higher order interactions between cycle variables are not accounted for. The system of bivariate corrections prescribed by this Code accounts for significant second-order interactions so as to minimize the uncertainty of the methodology. The uncertainty of the correction methodology is approximately proportional to the magnitude of the corrections. Therefore, to minimize the uncertainty introduced by the correction methodology, all efforts should be made to conduct the test as close to reference conditions as possible. Studies have shown that the uncertainty of the methodology, when used within the bounds specified in this Code, can be approximated by the following relationship:

$$U_\Delta = 0.01 \sum_{i=1}^{n} |\Delta_i|$$

where

U_Δ = total uncertainty of the methodology (kW)
$|\Delta_i|$ = absolute value of the ith correction

(g) A curve-fitting or interpolation error may be introduced by the accuracy of a curve fit to discrete correction formulation points or by the shape of a curve fit between discrete points. Errors may also be introduced by interpolating between discrete points. An adequate number of discrete points should be used in the correction formulation and the appropriate shape and order in curve fits to ensure that the use of curve fits or interpolation introduces no significant error.

(h) A prediction model error may be introduced due to differences between predicted turbine response to changes in cycle variables and actual unit response to changes in cycle variables. This error or uncertainty cannot be quantified for all prediction models that might be used. Consideration of these uncertainties has been taken into account in determining the values in the table of allowable deviations (Table 3-1.3.5).

5-4.4 Calculation of Uncertainty

The uncertainty of the result is the root mean square value of the uncertainty for each measurement multiplied by the sensitivity coefficient of the parameter. From ASME PTC 19.1,

$$U_R = 2\left[\sum\left(\Theta_i \frac{B_i}{2}\right)^2 + \sum (\Theta_i S_i)^2\right]^{0.5}$$

$$= 2\left[\sum \left(\Theta_i^2\left\{\left(\frac{B_i}{2}\right)^2 + S_i^2\right\}\right)\right]^{0.5}$$

or

$$U_R = \left[\sum (\Theta_i\{B_i^2 + (2S_i)^2\})\right]^{0.5}$$

or

$$= \left[\sum (\Theta_i^2 U_{Ti}^2)\right]^{0.5}$$

or

$$= \left[\sum U_i^2\right]^{0.5}$$

where

U_R = uncertainty of the result
Θ_i = sensitivity coefficient of parameter i
B_i = systematic error of parameter i
S_i = standard deviation of the mean of parameter i
U_{Ti} = combined random and systematic error of parameter i
U_i = uncertainty due to parameter i

In developing the estimate of test uncertainty, care must be taken to consider correlated uncertainties (see ASME PTC 19.1, Section 8.1).

For each parameter, the random error has been estimated as $2S_i$ and the systematic error has been estimated at 95% confidence as B_i. This reflects the desire to have a 95% confidence level that the true value lies within $\pm U_{Ti}$ of the mean. S_i can be calculated from

$$S_i = \frac{1}{\sqrt{M}} \sqrt{\sum_{k=1}^{k=N} \frac{(X_k - \overline{X})^2}{(N-1)}}$$

where

S_i = the standard deviation of the mean
N = number of measurements
M = number of independent readings
X_k = individual measurement value
$\overline{X}$ = mean

5-4.5 Measurements

Prior to the test, the variables and their sensitivity coefficients are tabularized in a format similar to Table B-15 shown in Nonmandatory Appendix B, Sample Test Uncertainty Analysis.

5-4.6 Estimated Uncertainties

Uncertainties should be estimated based on experience and the suggestions and analyses presented in ASME PTC 19.1. Estimations should reflect the 95% confidence level used for PTC Codes. The values used in Table C-1 are representative of those achievable with appropriate selection of instruments, number of readings, and so on. As shown, the total uncertainty of each parameter meets the Code requirement for that measurement.

5-4.7 Post-Test Uncertainty Analysis

A post-test uncertainty analysis shall be conducted to verify the assumptions made in the pretest uncertainty analysis. In particular, the data should be examined for sudden shifts and outliers. The assumptions for random errors should be checked by determining the degrees of freedom and the standard deviation of each measurement.

Copyright ASME International
Provided by IHS under license with ASME
No reproduction or networking permitted without license from IHS
Not for Resale

Section 6
Report of Results

6-1 GENERAL REQUIRMENTS

The test report shall incorporate all documentation and information pertaining to the test(s) in a concise and clear manner. The following is a list of the general requirements in a recommended report format:

(a) executive summary, described in subsection 6-2

(b) introduction, described in subsection 6-3

(c) calculation and results, described in subsection 6-4

(d) instrumentation, described in subsection 6-5

(e) conclusion, described in subsection 6-6

(f) appendices, described in subsection 6-7

Other formats are acceptable, provided they contain all the information described in subsections 6-2 through 6-7.

6-2 EXECUTIVE SUMMARY

The executive summary shall present a brief overview of the test. Definitive statements describing the test, which consist of the following information, are to be provided:

(a) test background information, such as the project name, location, date, and time

(b) equipment owner and identification information

(c) plant type, cycles, and operating configuration

(d) parties conducting and responsible for the test

(e) object and scope of the test

(f) summary of the results and conclusions of the test(s), including test uncertainty

(g) comparison to contract guarantee(s)

(h) deviations from the test requirements per any agreements among parties to the test

6-3 INTRODUCTION

The introduction shall present a detailed account of the background and scope of the test as well as any additional information about the plant and test not given in the executive summary. The minimum essential information this section should include is the following:

(a) brief history of equipment operation and date of commercial operation (if necessary)

(b) description of equipment to be tested and all such ancillary equipment that may influence the test

(c) cycle diagram(s) showing the test boundary(s) and test readings

(d) list of all representatives of the parties to the test(s)

(e) pretest agreements not included in the executive summary

(f) organization of test personnel

(g) test goals per Sections 3 and 5 of this Code

6-4 CALCULATIONS AND RESULTS

The calculation and results section should detail all assumptions, data reduction, calculations, corrections, and analysis used to determine the results and uncertainty of the test. The following is a list of the information required:

(a) listing of all equations used for determining the test results and test uncertainty, including the general performance equation based on test goals and applicable corrections

(b) tabulation of the reduced data necessary to calculate the results and any additional operating conditions not part of such reduced data

(c) step-by-step calculation of the test results from the reduced data

(d) detailed calculation of primary flow rates from applicable data, including intermediate results, if required

(e) direct references to standard conversions, scientific constants, and property information

(f) information and calculations to support the elimination of data for outlier reasons or for any other reasons

(g) demonstration of the repeatability of test runs

6-5 INSTRUMENTATION

The instrumentation section shall detail all the instrumentation used in the test. The following is a list of the required instrument information:

(a) tabulation of instrumentation used for the primary and secondary measurements, including type, make, model number, and accuracy class

(b) description of instruments respective measurement location, connections, and any identifying tag number/address

Copyright ASME International
Provided by IHS under license with ASME
No reproduction or networking permitted without license from IHS
Not for Resale

(c) documentation of the calibration traceability of each test instrument

(d) identification of an instrument that was used as back-up

(e) means of data collection for each data point, such as temporary or permanent data acquisition systems or manual data sheets

(f) description and specifications of data acquisition system(s) used

(g) summary of pretest and post-test calibration

6-6 CONCLUSION

The conclusion should be included if a more detailed discussion of the test results is required or there are any recommendations for changes to future test procedures due to lessons learned.

6-7 APPENDICES

The appendix to the test report should give any information not practical for the body of the report. This should include but not be limited to the following:

(a) copies of original data sheets and/or data acquisition system(s) printouts

(b) copies of correction curves used in the calculation of test results

(c) copies of operational information during the test such as operation logs, control system printouts, or other recording of operating activity

(d) copies of signed valve line-up sheets and other documentation indicating required test configuration and disposition of operation

(e) instrumentation calibration results from laboratories and certification from manufacturers

(f) raw data printouts

Copyright ASME International
Provided by IHS under license with ASME
No reproduction or networking permitted without license from IHS
Not for Resale

Copyright ASME International
Provided by IHS under license with ASME
No reproduction or networking permitted without license from IHS
Not for Resale

MANDATORY APPENDIX I
CORRECTION FORMULATION METHODOLOGY

I-1 INTRODUCTION

Two significant changes to past industry practice for calculating corrected steam turbine output in combined cycle and cogeneration applications have been incorporated into this Code. The first is the adoption of the use of additive corrections for all correction variables. Furthermore, most of these corrections are now bivariate corrections. The second change is the incorporation of corrections for reheater heat consumption in reheat cycles to fully correct the cycle back to reference heat input. The purpose of this Appendix is to explain the reason for the changes and provide a more detailed derivation of the reheater heat consumption corrections.

I-2 BIVARIATE ADDITIVE CORRECTIONS

In the past, manufacturers have employed different methods for correcting steam turbine performance in combined cycle and cogeneration applications. Some turbine suppliers used additive corrections (created by taking the difference between the reference output and the off-design output), and others used multiplicative corrections (created by taking the ratio of the reference output to the off-design output). Sometimes a mix of the two types were used, raising the question in some such cases of the order of operation of the additive and multiplicative corrections.

In conjunction with the development of ASME PTC 6.2, studies were conducted to quantify and reduce the error in the corrected performance introduced by using correction formulations similar to those used in ASME PTC 6 alternative tests instead of a test-cycle modeling methodology similar to that used in ASME PTC 6 full-scale testing. Univariate correction formulations do not reflect the actual higher order interactions that take place between cycle-operating variables in determining steam turbine performance. The advantage of a test cycle–modeling methodology is that it does take all cycle variable interactions into account, thus eliminating or at least greatly reducing errors introduced to the corrected results due to the correction methodology. The disadvantage to such methodologies is their complexity and their reliance on much more detailed turbine information and possibly proprietary turbine supplier information.

In developing a correction methodology, the Committee balanced the uncertainty introduced by a simplified method with the reduced complexity of a simplified method. Considering that most tests conducted in accordance with ASME PTC 6.2 would probably have uncertainties equal to or greater than 0.4%, a correction methodology with no more than 0.1% uncertainty was considered acceptable, as this would impact overall uncertainty by no more than 0.01%.

To study different correction formulation methodologies, a thermodynamic computer modeling program was used to develop correction formulations for a particular turbine model and cycle (in this case, a reheat steam turbine in a three-pressure reheat combined cycle application was used). The turbine model was then run at various off-design conditions for the correction variables. Multiple variables were changed for each run. Using the output from these off-design runs as simulated test data, the correction formulations were used to correct the off-design turbine performance back to the reference conditions. If the correction methodology were perfect, taking all input variable interactions into account, the corrected performance in this study would equal the reference performance. Thus, the difference between the corrected performance and the reference performance was used as a measure of the accuracy of the methodology.

The magnitude of the error introduced by a correction methodology is generally proportional to the magnitude of the deviations of the correction variables from their reference value. Therefore, one way to minimize the uncertainty introduced by a methodology is to limit the range of its application. Although the Committee recognized that limitations were necessary, it was desirable not to limit the deviations of the correction variables too much so that the practicality of the application of the Code would not suffer. In the study on the correction methodologies, the deviation from reference for the correction variables was pushed to what was considered typical extremes for testing conditions possibly encountered in the industry. If the uncertainty of the methodology were able to meet the

Copyright ASME International
Provided by IHS under license with ASME
No reproduction or networking permitted without license from IHS
Not for Resale

goal of 0.1% within these broad limits, it would certainly meet them within any tighter limits eventually determined by the Committee.

Another consideration in this study was error introduced by curve fitting or interpolation. Since the correction formulations were generated at discrete points, additional errors could be introduced by the accuracy of a curve-fit or by the interpolation method if the correction variable did not coincide with one of the discrete points in the correction formulation. The study on the correction methodology intentionally minimized or eliminated the errors introduced by curve-fitting or interpolation since these errors depend on the resolution of the formulation and not on the ability of the methodology to accurately reflect variable interactions.

In developing the new set of correction formulations, it was decided to make all of the formulations additive. It was undesirable to mix additive and multiplicative corrections since this often raises questions and confusion about the order of operations. The initial method that was studied, one used by some in the industry at the time, used multiplicative corrections for most variables. This method did not meet the uncertainty goals of the study. Therefore, a system of additive corrections was investigated.

The fundamental first-law thermodynamics of a steam turbine were considered in developing the additive corrections. The power produced by the steam turbine can be expressed as the sum of the products of mass and enthalpy change for the different turbine sections. Each correction accounts for either a change in mass flow or for a change in the enthalpy drop in one or more of the turbine sections. However, since the corrections are differences, the magnitude of the difference in an $m^*\Delta h$ term is not only dependent on the change in the primary term but also in the magnitude of the other term in the product. For example, if a correction is calculated for a variable that primarily affects the enthalpy change in a section (such as the reheat temperature), then the change in output could be expressed as $m_1^*d\Delta h$. It is clear when written like this that this correction only applies at a flow of m_1. If the correction were to be calculated at a different flow, m_2, the correction would be equal to $m_2^*d\Delta h$. This means that the correction is bivariate, i.e., it depends on two variables.

In some cycles, this bivariate additive set of corrections could be accurately replaced by a system of univariate multiplicative corrections if the flows throughout the turbine section tended to change approximately proportionally to some turbine reference flow such as HP steam flow. In such a cycle, all of the flows would change proportionally with HP steam flow and the relative contributions to output of any one turbine section would stay approximately the same. In the corrections, the mass flow in each $m^*\Delta h$ term could be expressed as an approximately constant fraction of the HP steam flow. Therefore, when expressed as a ratio, the HP steam flow term would come out of the numerator and the denominator, reducing the ratio to one with a single independent variable instead of two independent variables. This would permit a system of univariate multiplicative corrections. Such a system is used in the ASME PTC 6 alternative test correction method as well as in the ASME PTC 6 full-scale method in the Group 2 corrections. This system retains good accuracy in most regenerative feedwater heater cycles as seen in nuclear and conventional fossil-fired boiler cycles. In these cycles there is typically one steam source for the steam turbine, and all extractions from the steam turbine remain an approximately constant proportion of the main steam flow throughout the operating range.

In most multipressure combined cycles and in cogeneration cycles, there are multiple steam inductions and/or extractions. There are no governing cycle dynamics to maintain these inductions and extractions as approximately constant fractions of the main steam flow. In fact, in many cycles, the inductions and extractions are governed by cycle dynamics or operational requirements that prevent them from responding proportionally to the main steam flow. Since the inductions and extractions do not respond proportionally to main steam flow, one cannot factor out a common main steam flow term from the multiplicative correction ratio, meaning the correction terms will remain bivariate. Therefore, there is no advantage to using the multiplicative correction ratios for such combined and cogeneration cycles.

There is an advantage to using the additive correction differences, since for many of the correction variables a difference more accurately reflects the true thermodynamics of the effect. For example, a change in reheater pressure drop only affects the HP turbine expansion by changing the available energy of the HP expansion. The additive correction accounts for this change in HP power as absolute change in turbine power output (kW). If a multiplicative correction were used, the absolute change in power output (kW) would be a function of the correction ratio and the total power of the turbine (the product of the correction ratio and the output) even though the actual change only took place in the HP section. A similar example can be given for the exhaust pressure. A change in exhaust pressure only affects the power produced by the last one or two turbine stages. If a multiplicative correction were employed, the change in power would be determined by the ratio correction and the total turbine output, even though the actual change only took place across the last one or two stages of the turbine.

Using the principle that a change in turbine output could be represented as the change in one or both terms in the product, $m^*\Delta h$, for different turbine sections, a system of additive bivariate corrections was developed as described in Section 5 of the Code.

Copyright ASME International
Provided by IHS under license with ASME
No reproduction or networking permitted without license from IHS Not for Resale

I-3 REHEATER HEAT CONSUMPTION CORRECTIONS

It has been typical over the last several decades to use output and heat rate as the measures of steam turbine performance in regenerative feedwater heater cycles employing conventional fossil-fired boilers. Of these two indicators of performance, heat rate is a measure of the overall turbine efficiency, and output is a measure of the output capacity of a turbine, not taking flow, and therefore, heat consumption, into account. This output capacity is a measure of the ability of the steam turbine to produce power at reference throttle pressure and temperature, assuming that the boiler could produce as much steam as the turbine could "swallow" at these conditions. In nuclear cycles, the typical measure of turbine performance was output at a constant reactor thermal power. This calculated output at constant reactor thermal power differed from the output capacity used in fossil-fired applications in that it did take heat consumption into account, and, therefore, was a measure of turbine efficiency. To distinguish this output measurement at reference heat consumption from the output capacity measurement, the term output performance is used in this Code.

In industrial and cogeneration steam turbine applications, it has been typical to use calculated output similar to the nuclear application rather than the fossil-fired application. In these industrial and cogeneration applications, measured output was corrected for cycle pressures, temperatures and flows. It was the correction for flows that made this corrected output similar to the nuclear applications in that the result gave the power output of the turbine at reference heat consumption, and was thus, an indication of turbine cycle efficiency, not of output capacity.

As reheat combined cycle applications became common in the industry, the correction methods used for industrial and cogeneration cycles were adopted, and output corrected to reference flows became the primary measure of turbine performance, not output capacity as utilized in fossil-fired conventional boiler applications.

During the development of ASME PTC 6.2, shortcomings in these correction methods when applied to reheat combined cycles were discovered. As in any reheat cycle, a portion of the heat consumption takes place in the reheater, following the HP section exhaust and prior to the IP section inlet. Because this portion of the heat consumption takes place between two turbine sections, the turbine can affect the heat consumption in the reheater. For example, if the HP turbine section efficiency is higher than the reference case HP section efficiency, then the HP turbine exhaust enthalpy will be lower than the reference HP exhaust enthalpy. In order to heat this exhaust flow up to rated reheater temperature, more reheater heat consumption than was required in the reference case is needed.

Because of this influence of the steam turbine on the reheater heat consumption, correcting the output performance for the flows, pressures and temperatures entering the steam turbine does not necessarily correct the turbine output performance to reference heat consumption. The effect of the HP exhaust conditions on the reheater heat consumption is not taken into account. Therefore, the output performance is not an accurate indication of overall turbine efficiency. Likewise, it is not an indication of turbine output capacity (since a correction has been applied for steam flows).

To correct for this deficiency, and make corrected output performance a measurement of overall turbine efficiency by correcting it back to reference heat consumption, two additional corrections, Δ_7 and Δ_8, have been incorporated to account for the steam turbine impact on reheater heat consumption. The derivation of these corrections is not simple, but the application of the corrections utilizes existing correction formulations, and, therefore, does not require the creation of additional correction formulations.

The derivation of the reheater heat consumption corrections is based upon the following logic. Inherent in the other corrections is a change in turbine cycle heat consumption due to the other correction variables. For example, the correction for HP steam temperature gives the change in turbine output for a given change in HP steam temperature. Inherent in that change in HP steam temperature in the turbine cycle is a change in turbine cycle heat consumption. Following the application of all other corrections, the resulting corrected output performance represents the output at reference turbine inlet flows, pressures and temperatures, reference reheater pressure drop, and reference exhaust pressure. Therefore, the turbine cycle heat consumption contributed by each of these is inherently also corrected back to its reference value. The portion of the heat consumption not necessarily corrected back to reference conditions is the reheater heat consumption as determined by the HP section exhaust flow and the enthalpy rise from HP section exhaust enthalpy to hot reheat enthalpy. To correct the cycle back to reference heat consumption, a correction must be applied for the difference between the reference reheater heat consumption and the actual reheater heat consumption.

The calculation of this difference is not straight forward, however, since one cannot calculate it directly from the measured HP exhaust flow and enthalpy. The differences between the measured HP exhaust flow and enthalpy and the reference HP exhaust flow and enthalpy are due to a combination of factors, including differences from the reference in HP steam flow, HP steam temperature, and reheater pressure drop. Inherent in the corrections for these variables is a correction to reheater heat consumption for these variables. The heat consumption difference targeted

Copyright ASME International
Provided by IHS under license with ASME
No reproduction or networking permitted without license from IHS Not for Resale

Table I-3 Terms

Reference	Test	Corrected	Description
$\dot{m}_{HP}$	$\dot{m}'_{HP}$	. . .	HP steam flow
$\dot{m}_{L}$	$\dot{m}'_{L}$	. . .	HP turbine leakage
$\dot{m}_{IP}$	$\dot{m}'_{IP}$	$\dot{m}''_{IP}$	Net addition to HP exhaust flow in reheater (IP induction + reheat spray-process extractions)
$\dot{m}_{RHTspray}$	. . .	$\dot{m}''_{RHTspray}$	Reheat spray flow
h_{HP}	h'_{HP}	h''_{HP}	HP inlet enthalpy
s_{HP}	s'_{HP}	. . .	HP inlet entropy
h_{HPe}	h'_{HPe}	h''_{HPe}	HP exhaust enthalpy
p_{HPe}	p'_{HPe}	p''_{HPe}	HP exhaust pressure
h_{HRH}	. . .	h''_{HRH}	Hot reheat enthalpy
p_{HRH}	. . .	p''_{HRH}	Hot reheat pressure
T_{HRH}	T'_{HRH}	. . .	Hot reheat temperature (in absolute scale)
Δp_{RHTR}	. . .	. . .	Reheater system pressure drop
h_{BLRi}	. . .	h''_{BLRi}	Boiler (HRSG) inlet enthalpy
η_{HP}	η'_{HP}	. . .	HP section efficiency
f	f'	. . .	HP turbine leakage as fraction of HP steam flow
AE	. . .	AE''	HP section available energy
RD	. . .	RD''	Reheater duty
NRD	. . .	NRD''	Nonreheater duty

$\Delta\dot{m}_{HP}$ = change in HP steam flow due to turbine-influenced changes in reheater duty
$\Delta\dot{m}_{RHTspray}$ = change in reheat spray flow due to turbine-influenced changes in reheater duty
Δh_{HRH} = change in Hot reheat enthalpy due to difference between test and reference IP section flow capacity
Δh_{HPe} = change in HP exhaust enthalpy due to difference between test and reference HP section efficiency

by the Δ_7 and Δ_8 corrections is the reheater heat consumption difference from reference that is due solely to the influence of the turbine performance on the reheater heat consumption. This portion is due to differences in HP section efficiency, HP section leak-off flows, and IP section flow capacity. The effects of these turbine parameters on reheater heat consumption must be calculated at reference cycle conditions since inherent in the other cycle variable corrections are corrections to HP exhaust flow and reheater enthalpy rise for the effects of the other cycle variables on these reheater conditions.

The philosophy of the derivation is to determine the HP exhaust flow and enthalpy and the hot reheat enthalpy for the as-tested steam turbine at reference cycle HP steam flow, pressure and temperature, reference reheater pressure drop, and reference IP steam induction and hot reheat temperature. Table I-3 lists three different categories of terms used in the derivation. The first category is the set of reference variables. These symbols represent the value of that variable for the reference case. The second category is the set of test variables. These symbols represent the value of the variable as measured during the test. The third category is the set of corrected test variables. These represent the value of the variable that one would have measured had the test been conducted at reference cycle HP steam flow, pressure and temperature, reference reheater pressure drop, and reference IP steam induction and hot reheat temperature.

Once the reheater heat consumption is calculated, this heat consumption term must be converted to output since the calculated test result is output performance, which has the units of power. Studies with combined cycle modeling programs were conducted to determine how such reheater heat consumption differences would actually be converted within a typical HRSG. The results of this study formed the basis for the method of converting the reheater heat consumption differences to power.

The combined cycle modeling studies showed that, in most cases, the actual change in the steam turbine output due to re-allocation of the reheater heat consumption could be accurately estimated by assuming all of that heat consumption difference was converted to a change in HP steam flow. In cases in which the HP exhaust flow differed from the reference HP exhaust flow and the reheat attemperation sprays were actively controlling the hot reheat temperature, the actual change in steam turbine output due to the re-allocation of the reheater heat consumption due to the HP exhaust flow could be accurately estimated by assuming that the heat consumption difference was

--`,,```,,,,````-`-`,,`,,`,`,,`---
Copyright ASME International
Provided by IHS under license with ASME
No reproduction or networking permitted without license from IHS
Not for Resale

converted to reheat sprays. The derivation below gives the change in HP steam flow and reheat spray flow that could be generated from the difference between the reference reheater heat consumption and the reheater heat consumption of the as-tested turbine at reference turbine cycle conditions.

Once these changes in HP steam flow and reheat spray flows are calculated, the existing HP steam flow correction formulation and the net reheater steam addition correction formulations can be used to determine the change in turbine output corresponding to these changes in steam flows.

$$f \equiv \frac{\dot{m}_L}{\dot{m}_{HP}} \tag{I-1}$$

$$f' \equiv \frac{\dot{m}'_L}{\dot{m}'_{HP}} \tag{I-2}$$

$$\dot{m}''_{HP} = \dot{m}_{HP} + \Delta\dot{m}_{HP} \tag{I-3}$$

$$\dot{m}''_{IP} = \dot{m}_{IP} + \Delta\dot{m}_{RHTspray} \tag{I-4}$$

$$h_{HP} \cong h''_{HP} \tag{I-5}$$

$$p''_{HRH} \cong p'_{HRH} \times \frac{\dot{m}_{HP} + \dot{m}_{IP}}{\dot{m}'_{HP} + \dot{m}'_{IP}} \sqrt{\frac{T_{HRH}}{T'_{HRH}}} \tag{I-6}$$

$$p''_{HPe} = \frac{p''_{HRH}}{1 - \Delta p_{RHTR}} \tag{I-7}$$

$$\Delta h_{HRH} = h''_{HRH} - h_{HRH} = h@(p''_{HRH}, T_{HRH}) - h@(p_{HRH}, T_{HRH}) \tag{I-8}$$

$$\Delta h_{HPe} = h''_{HPe} - h_{HPe} \tag{I-9}$$

$$h_{HPe} = h_{HP} - \eta \times AE \tag{I-10}$$

$$h''_{HPe} = h_{HP} - \eta' \times AE'' \tag{I-11}$$

$$AE = h_{HP} - h@(p_{HPe}, s_{HP}) \tag{I-12}$$

$$AE'' = h_{HP} - h@(p''_{HPe}, s_{HP}) \tag{I-13}$$

$$\eta = \frac{h_{HP} - h_{HPe}}{h_{HP} - h@(p_{HPe}, s_{HP})} \tag{I-14}$$

$$\eta' = \frac{h'_{HP} - h'_{HPe}}{h'_{HP} - h@(p'_{HPe}, s'_{HP})} \tag{I-15}$$

$$\Delta h_{HPe} = \eta \times AE - \eta' \times AE'' \tag{I-16}$$

$$h_{BLRi} = h''_{BLRi} \tag{I-17}$$

I-4 DERIVATION

This derivation assumes that the total heat duty transferred to the LP steam remains the same and is independent of changes in HP and IP section performance. This means that these terms do not need to be considered in the derivation. Modeling studies confirm that this is a reasonable assumption to make.

Design conditions:

$$RD = (\dot{m}_{HP} - \dot{m}_L) \times (h_{HRH} - h_{HPe}) + \dot{m}_{IP} \times (h_{HRH} - h_{BLRi}) = \dot{m}_{HP} \times (1 - f) \times (h_{HRH} - h_{HPe}) + \dot{m}_{IP} \times (h_{HRH} - h_{BLRi}) \tag{I-18}$$

$$NRD = \dot{m}_{HP} \times (h_{HP} - h_{BLRi}) \tag{I-19}$$

$$RD + NRD = \dot{m}_{HP} \times (1 - f) \times (h_{HRH} - h_{HPe}) + \dot{m}_{IP} \times (h_{HRH} - h_{BLRi}) + \dot{m}_{HP} \times (h_{HP} - h_{BLRi})$$

Conditions of as-tested turbine operating in reference cycle at reference heat consumption:

$$\begin{aligned} RD'' &= (\dot{m}''_{HP} - \dot{m}''_L) \times (h''_{HRH} - h''_{HPe}) + \dot{m}''_{IP} \times (h''_{HRH} - h''_{BLRi}) \\ &= \dot{m}''_{HP} \times (1 - f') \times (h_{HRH} + \Delta h_{HRH} - h_{HPe} - \Delta h_{HPe}) + \dot{m}''_{IP} \times (h''_{HRH} - h''_{BLRi}) \\ &= (\dot{m}_{HP} + \Delta\dot{m}_{HP}) \times (1 - f') \times (h_{HRH} + \Delta h_{HRH} - h_{HPe} - \Delta h_{HPe}) + (\dot{m}_{IP} + \Delta\dot{m}_{RHTspray}) \times (h_{HRH} + \Delta h_{HRH} - h_{BLRi}) \end{aligned} \tag{I-20}$$

$$NRD'' = \dot{m}''_{HP} \times (h''_{HP} - h''_{BLRi}) = (\dot{m}_{HP} + \Delta\dot{m}_{HP}) \times (h_{HP} - h_{BLRi}) \tag{I-21}$$

$$\begin{aligned} RD'' + NRD'' = {} & (\dot{m}_{HP} + \Delta\dot{m}_{HP}) \times (1 - f') \times (h_{HRH} + \Delta h_{HRH} - h_{HPe} - \Delta h_{HPe}) + (\dot{m}_{IP} + \Delta\dot{m}_{RHTspray}) \times (h_{HRH} + \Delta h_{HRH} - h_{BLRi}) \\ & + (\dot{m}_{HP} + \Delta\dot{m}_{HP}) \times (h_{HP} - h_{BLRi}) \end{aligned}$$

Copyright ASME International
Provided by IHS under license with ASME
No reproduction or networking permitted without license from IHS Not for Resale

Under the condition that the LP heat duty is constant, and the total HRSG duty is constant with small changes in HP and IP section characteristics, then the following holds true.

$$RD + NRD = RD'' + NRD''$$

$$\dot{m}_{HP} \times (1 - f) \times (h_{HRH} - h_{HPe}) + \dot{m}_{IP} \times (h_{HRH} - h_{BLRi}) + \dot{m}_{HP} \times (h_{HP} - h_{BLRi}) = (\dot{m}_{HP} + \Delta\dot{m}_{HP}) \times (1 - f') \times (h_{HRH} + \Delta h_{HRH} - h_{HPe} - \Delta h_{HPe}) + (\dot{m}_{IP} + \Delta\dot{m}_{RHT\text{spray}}) \times (h_{HRH} + \Delta h_{HRH} - h_{BLRi}) + (\dot{m}_{HP} + \Delta\dot{m}_{HP}) \times (h_{HP} - h_{BLRi})$$

$$\dot{m}_{HP} \times [(1 - f) \times (h_{HRH} - h_{HPe}) - (1 - f') \times (h_{HRH} + \Delta h_{HRH} - h_{HPe} - \Delta h_{HPe})] + \dot{m}_{IP} \times [(h_{HRH} - h_{BLRi}) - (h_{HRH} + \Delta h_{HRH} - h_{BLRi})] = \Delta\dot{m}_{HP} \times [(1 - f') \times (h_{HRH} + \Delta h_{HRH} - h_{HPe} - \Delta h_{HPe}) + (h_{HP} - h_{BLRi})] + \Delta\dot{m}_{RHT\text{spray}} \times (h_{HRH} + \Delta h_{HRH} - h_{BLRi})$$

$$\dot{m}_{HP} \times [(f' - f) \times (h_{HRH} - h_{HPe}) + (1 - f') \times (\Delta h_{HPe} - \Delta h_{HRH})] - \dot{m}_{IP} \times (\Delta h_{HRH}) = \Delta\dot{m}_{HP} \times [(1 - f') \times (h_{HRH} + \Delta h_{HRH} - h_{HPe} - \Delta h_{HPe}) + (h_{HP} - h_{BLRi})] + \Delta\dot{m}_{RHT\text{spray}} \times (h_{HRH} + \Delta h_{HRH} - h_{BLRi}) \quad \text{(I-22)}$$

A combined HRSG-steam turbine modeling study showed that if one holds reheat sprays constant, the effects on the overall CC output are closely approximated by assuming that the change in reheater duty is completely converted to HP flow. Applying this to Eq. (I-22) to determine the change in HP steam flow, $\Delta\dot{m}_{RHTspray} = 0$. Solving for $\Delta\dot{m}_{HP}$ gives the following:

$$\Delta\dot{m}_{HP} = \frac{\dot{m}_{HP} \times [(f' - f) \times (h_{HRH} - h_{HPe}) + (1 - f') \times (\Delta h_{HPe} - \Delta h_{HRH})] - \dot{m}_{IP} \times (\Delta h_{HRH})}{(1 - f') \times (h_{HRH} + \Delta h_{HRH} - h_{HPe} - \Delta h_{HPe}) + (h_{HP} - h_{BLRi})} \quad \text{(I-23)}$$

Recognizing that this change in HP flow results from a combination of a change in HP exhaust enthalpy and a change in HP exhaust flow, one can break this equation into two terms, each quantifying the primary effect of the two HP performance changes. Let $\Delta\dot{m}_{HP1}$ represent the change in HP flow due to the change in HP exhaust enthalpy, and let $\Delta\dot{m}_{HP2}$ represent the change in HP flow due to the change in HP exhaust flow.

$$\Delta\dot{m}_{HP1} \equiv \frac{\dot{m}_{HP} \times (1 - f') \times (\Delta h_{HPe} - \Delta h_{HRH}) - \dot{m}_{IP} \times (\Delta h_{HRH})}{(1 - f') \times (h_{HRH} + \Delta h_{HRH} - h_{HPe} - \Delta h_{HPe}) + (h_{HP} - h_{BLRi})} \quad \text{(I-24)}$$

$$\Delta\dot{m}_{HP2} \equiv \frac{\dot{m}_{HP} \times (f' - f) \times (h_{HRH} - h_{HPe})}{(1 - f') \times (h_{HRH} + \Delta h_{HRH} - h_{HPe} - \Delta h_{HPe}) + (h_{HP} - h_{BLRi})} \quad \text{(I-25)}$$

When $\Delta\dot{m}_{RHT\text{spray}} = 0$, $\Delta\dot{m}_{HP} = \Delta\dot{m}_{HP1} + \Delta\dot{m}_{HP2}$.

Next to be addressed is the situation in which $\Delta\dot{m}_{RHT\text{spray}} \neq 0$. This occurs when the hot reheat temperature is held constant by varying the reheat spray flow. Assume your total change in HP steam flow is due only to the change in HP exhaust enthalpy, so that $\Delta\dot{m}_{HP} = \Delta\dot{m}_{HP1}$.

Substituting $\Delta\dot{m}_{HP} = \Delta\dot{m}_{HP1}$ into Eq. (I-22) gives

$$\dot{m}_{HP} \times [(f' - f) \times (h_{HRH} - h_{HPe}) + (1 - f') \times (\Delta h_{HPe} - \Delta h_{HRH})] - \dot{m}_{IP} \times (\Delta h_{HRH}) = \dot{m}_{HP} \times (1 - f') \times (\Delta h_{HPe} - \Delta h_{HRH}) - \dot{m}_{IP} \times (\Delta h_{HRH}) + \Delta\dot{m}_{RHT\text{spray}} \times (h_{HRH} + \Delta h_{HRH} - h_{BLRi})$$

$$\Delta\dot{m}_{RHT\text{spray}} = \frac{\dot{m}_{HP} \times (f' - f) \times (h_{HRH} - h_{HPe})}{(h_{HRH} + \Delta h_{HRH} - h_{BLRi})} \quad \text{(I-26)}$$

Copyright ASME International
Provided by IHS under license with ASME
No reproduction or networking permitted without license from IHS
Not for Resale

MANDATORY APPENDIX II
PROCEDURE FOR FITTING A CALIBRATION CURVE OF AN ORIFICE-METERING RUN

The derivation of the discharge coefficient as a function of the Reynolds number for an orifice-metering run based on fluid dynamic principles is presented in PTC 19.5. The curve fitting methodology is repeated in this Appendix for convenience.

This calibration data and geometry is for a specific orifice metering run. The data and dimensions of other metering runs will be different, but the methodology for curve-fitting, and, if necessary, extrapolating the data, is the same for all orifice metering runs.

The Fluid Dynamics-based equation for flange and corner tap orifice-metering runs is:

$$C = C_0 + a\beta^2 + b\beta^4 + d[f(\mathrm{Eu}, \mathrm{Re}_D)] + e\phi \tag{II-1}$$

where

$C_0 = 0.5957 \pm 0.000186$ for an uncalibrated orifice metering run
$a = 0.03371 - 0.0239L$
$b = 0.1496 \pm 0.0318$
$d = 0.2232 \pm 0.003417$
$e = -0.3343 + 0.2241L \pm 0.0169$

L is dimensionless and equal to

$L = 0$ for corner taps
$L = 0.5$ for D and $D/2$ taps
$L =$ distance from tap center to nearest plate face/D for flange taps. For example, in U.S. customary units, L is equal to 1 in./D, with D the pipe diameter in inches.

$$f(\mathrm{Eu}, \mathrm{Re}) = \frac{\sqrt{1-\beta^4}}{\sqrt{1 - \dfrac{\beta^4}{(1 - 30.78\ \mathrm{Re}^{-0.5})^2}}} - 1 \tag{II-2}$$

and

$$\phi \equiv \frac{1}{\sqrt{1-\beta^4}} - 1 \tag{II-3}$$

Combining Eqs. (II-1) and (II-2) to consider laboratory calibration data

$$C_{\mathrm{measured}} = C_0 + d[f(\mathrm{Eu}, \mathrm{Re})] \tag{II-4}$$

where C_{measured} is the coefficient of discharge determined from a laboratory calibration at a specific calibration point. Note that the missing terms from Eq. (II-1) are included in the measured coefficient of discharge term. Only the Euler/Reynolds-number function remains for extrapolation.

Shifting the terms in Eq. (II-4) and distributing the value of d

$$C_0 = C_{\mathrm{measured}} - 0.2232\ \frac{\sqrt{1-\beta^4}}{\sqrt{1 - \dfrac{\beta^4}{(1 - 30.78\ \mathrm{Re}^{-0.5})^2}}} + 0.2232 \tag{II-5}$$

The C_0 term is the difference between the measured coefficient of discharge and the Euler/Reynolds-number function.

Copyright ASME International
Provided by IHS under license with ASME
No reproduction or networking permitted without license from IHS
Not for Resale

Table II-1 Example Coefficient Curve Fit and Extrapolation for an Orifice-Metering Run

Tap Set A				Tap Set B			
Re_D	$C_{measured}$	C_o	C_{fitted}	Re_D	$C_{measured}$	C_o	C_{fitted}
664,900	0.6074	0.6060	0.6070	664,900	0.6076	0.6062	0.6070
733,400	0.6072	0.6059	0.6069	733,400	0.6073	0.6060	0.6070
790,000	0.6072	0.6060	0.6069	790,000	0.6074	0.6062	0.6069
801,900	0.6077	0.6065	0.6069	801,900	0.6078	0.6066	0.6069
850,000	0.6071	0.6059	0.6068	850,000	0.6073	0.6061	0.6069
917,400	0.6070	0.6058	0.6068	917,400	0.6071	0.6059	0.6068
975,500	0.6069	0.6058	0.6067	975,500	0.6070	0.6059	0.6068
1,043,300	0.6068	0.6057	0.6067	1,043,300	0.6067	0.6056	0.6068
1,088,000	0.6067	0.6056	0.6067	1,088,000	0.6068	0.605 7	0.6067
1,171,000	0.6066	0.6056	0.6066	1,171,000	0.6066	0.6056	0.6067
1,228,900	0.6066	0.6056	0.6066	1,228,900	0.6065	0.6055	0.6067
1,293,800	0.6063	0.6053	0.6066	1,293,800	0.6062	0.6052	0.6066
1,358,000	0.6065	0.6056	0.6066	1,358,000	0.6064	0.6055	0.6066
1,423,700	0.6065	0.6056	0.6065	1,423,700	0.6066	0.6057	0.6066
1,482,900	0.6061	0.6052	0.6065	1,482,900	0.6062	0.6053	0.6066
1,539,100	0.6059	0.6050	0.6065	1,539,100	0.6060	0.6051	0.6066
1,568,000	0.6063	0.6054	0.6065	1,568,000	0.6063	0.6054	0.6066
1,664,300	0.6063	0.6055	0.6065	1,664,300	0.6063	0.6055	0.6065
1,738,300	0.6061	0.6053	0.6065	1,738,300	0.6061	0.6053	0.6065
1,791,000	0.6060	0.6052	0.6064	1,791,000	0.6061	0.6053	0.6065
20E6	...	...	0.6059	20E6	...	...	0.6059
30E6	...	...	0.6058	30E6	...	...	0.6059
40E6	...	...	0.6058	40E6	...	...	0.6058
50E6	...	...	0.6058	50E6	...	...	0.6058
	C_o (avg)	0.6056			C_o(avg)	0.6057	

Once a C_0 term has been computed for all of the given Reynolds numbers and corresponding coefficients of discharge of a calibration, the average of all these is computed by

$$\overline{C}_0 = \frac{\sum_{i=1}^{n} C_{0,i}}{n} \tag{II-6}$$

where n = the number of calibration points.

The fitted calibration curve, and the one from which coefficients of discharge for higher Reynolds number values may be extrapolated is

$$C = \overline{C}_0 + 0.2232 \frac{\sqrt{1-\beta^4}}{\sqrt{1-\dfrac{\beta^4}{(1-30.78\ \mathrm{Re}^{-0.5})^2}}} - 0.2232 \tag{II-7}$$

Equation (II-7) may be used to fit a calibration curve for all corner tap or flange tap orifice metering runs that are built and installed in strict accordance with PTC 19.5. As the equation is also based on the principles of Fluid Dynamics, it may also be used, if necessary, to extrapolate to higher Reynolds numbers than the laboratory calibration.

Table II-1 shows actual calibration data for an orifice metering run for both sets of taps. The metering run is 201.8 mm (7.9460 in.) in diameter, with a β ratio of 0.6024. Extrapolations are also shown at pipe Reynolds numbers of 20, 30, 40, and 50 million.

As an example of the calculations, the average C_0 for Tap Set A is 0.6056. At a pipe Reynolds number of 1,088,000, the fitted discharge coefficient is determined by substituting into Eq. (II-7):

$$C = 0.6056 + 0.2232 \frac{\sqrt{1-0.6024^4}}{\sqrt{1-\dfrac{0.6024^4}{(1-30.78\times 1{,}088{,}000^{-0.5})^2}}} - 0.2232 = 0.6067 \tag{II-8}$$

Copyright ASME International
Provided by IHS under license with ASME
No reproduction or networking permitted without license from IHS
Not for Resale

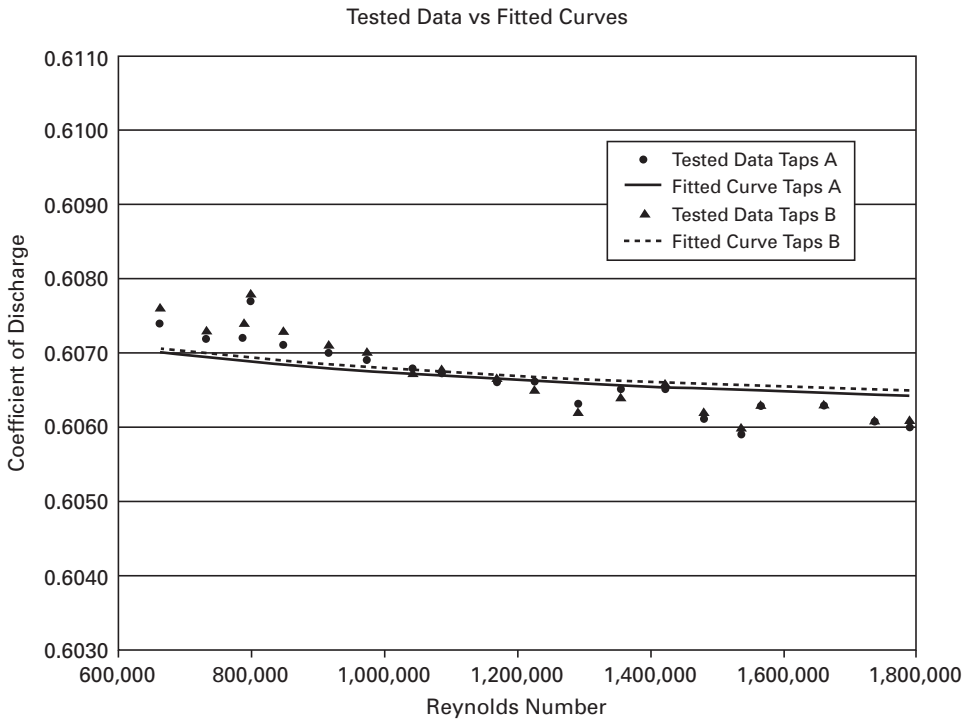

Fig. II-1 Orifice-Metering Run Calibration Points and Fitted Curves (Ordinate is "Coefficient of Discharge")

The fitted coefficient of 0.6067 is identical, in this case, to the tested coefficient to four significant digits.

For the test point at a pipe Reynolds number of 1,664,300

$$C = 0.6056 + 0.2232 \frac{\sqrt{1 - 0.6024^4}}{\sqrt{1 - \dfrac{0.6024^4}{(1 - 30.78 \times 1{,}664{,}300^{-0.5})^2}}} - 0.2232 = 0.6065 \qquad \text{(II-9)}$$

This time the fitted discharge coefficient is 0.03% different from the measured discharge coefficient of 0.6063.

The data points and fitted curves are shown graphically on Fig. II-1.

To extrapolate to higher Reynolds numbers above the highest calibrated point, the fitted curve is applied by substituting the Reynolds number to which the extrapolation is being made for the Reynolds number term in Eq. (II-7).

Copyright ASME International
Provided by IHS under license with ASME
No reproduction or networking permitted without license from IHS
Not for Resale

NONMANDATORY APPENDIX A
SAMPLE TEST CALCULATION

A-1 CYCLE DESCRIPTION

The steam turbine to which this sample calculation applies is a 240 MW reheat steam turbine in a combined cycle application. The combined cycle plant has two gas turbines, two heat recovery steam generators (HRSGs), and one steam turbine. The steam turbine is a two-casing machine with an opposed-flow HP/IP and a crossover to a double-flow LP. There is a midspan leakage from the HP section to the IP section as well as shaft end-packing leakages from the HP and IP exhaust ends. The steam from the LP exhaust exits into a condenser.

The steam cycle is a three-pressure-level reheat cycle. The condensate flow leaving the condenser passes through the low pressure economizer of the HRSGs before entering an LP evaporator. The LP evaporator produces steam as well as saturated liquid. The steam passes through an LP superheater before being admitted to the turbine. The liquid is split into two streams, one of which passes through an HP feedpump before going on to HP economizers, an HP evaporator, and HP superheaters before entering the turbine. The other stream passes through an IP feedpump before going on to IP economizers, an IP evaporator and an IP superheater before mixing with the steam coming from the exhaust of the HP section of the turbine.

The HP steam from the HRSGs enters the HP section of the steam turbine, expands to the HP exhaust and exits the turbine as the cold reheat flow. The IP steam from the HRSGs mixes with the cold reheat flow, and then the mixture passes through the reheater sections of the HRSGs. The hot reheat steam enters the IP section of the steam turbine and expands to the IP exhaust. The LP steam from the HRSG enters at the IP exhaust, and the mixture of the steam from the IP section of the turbine and the LP induction steam pass through a crossover pipe to the LP section, where it expands before passing on to the condenser to complete the cycle.

Tables A-1-1 and A-1-2 list the reference conditions for the steam turbine as well as the test parameters. For this example, HP steam flow was calculated from the measured HP feedwater flows, the measured HP attemperation flows and the unaccountable cycle leakage flow. The IP induction flow was calculated from the measured IP feedwater flows, the reheat attemperation flows, and the unaccountable cycle leakage flow. The LP induction flow was calculated from measured LP steam flows. The midspan leakage was inferred from a set of special tests in which the HP and reheat steam temperatures were set at different levels. The high pressure pack-

Table A-1-1 Reference and Test Conditions—SI Units

Symbol	Definition	Reference Conditions	Test Conditions
$\dot{m}_{HP}$	HP steam flow	144.40 kg/s	149.86 kg/s
p_{HP}	HP steam pressure	12 750 kPa	12 893 kPa
T_{HP}	HP steam temperature	565.0 C	560.0 C
p_{HPe}	HP exhaust pressure	3 482 kPa	3 585 kPa
h_{HPe}	HP exhaust enthalpy	3 153.0 kJ/kg	3 153.8 kJ/kg
$\dot{m}_{HPe}$	HP exhaust flow into reheater	140.89 kg/s	143.86 kg/s
Δp_{RHTR}	Reheater system pressure drop	10.0%	6.3%
p_{HRH}	Reheat pressure	3 134 kPa	3 358 kPa
T_{HRH}	Reheat temperature	565.0 C	551.7 C
$\dot{m}_{IP}$	IP steam + reheat spray flow	14.87 kg/s	17.25 kg/s
$\dot{m}_{LP}$	LP induction flow	7.25 kg/s	7.59 kg/s
h_{LP}	LP induction enthalpy	3 133.0 kJ/kg	3 099.6 kJ/kg
p_{exh}	Exhaust pressure	8.5 kPa	11.2 kPa
h_{HRSG}	HRSG inlet water enthalpy	186.1 kJ/kg	195.4 kJ/kg
PF	Generator Power Factor	0.85	0.90
p_H2	Generator Hydrogen Pressure	414 kPa	400 kPa
kW	Net Generator Output	241 700 kW	245 088 kW

Copyright ASME International
Provided by IHS under license with ASME
No reproduction or networking permitted without license from IHS
Not for Resale

Table A-1-2 Reference and Test Conditions—U.S. Customary Units

Symbol	Definition	Reference Conditions	Test Conditions
$\dot{m}_{HP}$	HP steam flow	1,146,039 lbm/hr	1,189,374 lbm/hr
p_{HP}	HP steam pressure	1,849.2 psia	1,870.0 psia
T_{HP}	HP steam temperature	1,049.0°F	1,040.0°F
p_{HPe}	HP exhaust pressure	505.0 psia	520.0 psia
h_{HPe}	HP exhaust enthalpy	1,355.6 Btu/lb	1,355.9 Btu/lb
$\dot{m}_{HPe}$	HP exhaust flow into reheater	1,118,161 lbm/hr	1,141,781 lbm/hr
Δp_{RHTR}	Reheater system pressure drop	10.0%	6.3%
p_{HRH}	Reheat temperature	1,049.0°F	1,025.0°F
T_{HRH}	IP steam + reheat spray flow	118,001 lbm/hr	136,942 lbm/hr
$\dot{m}_{IP}$	LP induction flow	57,540 lbm/hr	60.253
$\dot{m}_{LP}$	LP induction enthalpy	1,347.0 Btu/lb	1,332.6 Btu/lb
h_{LP}	Exhaust pressure	2.51 inHg Abs	3.30 inHg Abs
p_{exh}	HRSG inlet water enthalpy	80.0 Btu/lb	84.0 Btu/lb
h_{HRSG}	Generator power factor	0.85	0.90
PF	Hydrogen pressure	60 psia	58 psia
p_{H2}	Generator output	241,700 kW	245,088 kW

Table A-2 Measured Flows

Flow	Measurement (kg/s)	Measurement (lb/hr)
HP Feedwater A	74.86	594,164
HP Feedwater B	74.78	593,500
HP Spray A	0.24	1,913
HP Spray B	0.19	1,513
IP Feedwater A	8.6	68,235
IP Feedwater B	8.55	67,895
Reheat Spray A	0.09	685
Reheat Spray B	0.04	325
LP Steam A	3.80	30,153
LP Steam B	3.79	30,100
HP turbine high-pressure end-packing	0.99	7,867
HP turbine low-pressure end-packing [Note (1)]	0.17	1,342
Midspan packing [Note (2)]	4.84	38,384
Unaccountable cycle leakage [Note (3)]	0.25	2,000

NOTES:
(1) Calculated using test steam conditions and the design end-packing flow constant determined from the reference heat balance.
(2) Determined as a percent of HP steam flow by the Inference Method.
(3) Determined from measuring the level changes in the hotwell and the evaporator drums and by measuring or estimating the flow rates of known leaks. This method required isolation of make-up to the cycle during the test.

ing leak-off at the HP exhaust was measured. The low pressure leak-off at the HP exhaust was calculated using design criteria.

A-2 FLOWS

Table A-2 lists the measured flows for this example.

From the measurements in Table A-2, the following values are calculated:

$$\dot{m}_{HPFW} = \dot{m}_{HPFWA} + \dot{m}_{HPFWB} + \dot{m}_{HPsprayA} + \dot{m}_{HPsprayB}$$
$$\dot{m}_{IPFW} = \dot{m}_{IPFWA} + \dot{m}_{IPFWB} + \dot{m}_{RHTsprayA} + \dot{m}_{RHTsprayB}$$
$$\dot{m}_{LPstm} = \dot{m}_{LPstmA} + \dot{m}_{LPstmB}$$

Copyright ASME International
Provided by IHS under license with ASME
No reproduction or networking permitted without license from IHS
Not for Resale

Table A-3.1-1 Actual Installed PT Test Data

	Label	Units	Phase 1	Phase 2	Phase 3
PT Voltage (measured)	V	VAC	69.28	68.95	69.63
PT Current (measured)	I	mA	360	350	410
PT VA (=V*I/1000)	Bc	VA	24.941	24.133	28.548

Using these values, the unaccountable cycle leakage flow is divided proportionally into HP, IP, and LP leakage flows using the following formula

$$\dot{m}_{Lkg,HP} = \frac{\dot{m}_{HPFW}}{(\dot{m}_{HPFW} + \dot{m}_{IPFW} + \dot{m}_{LPstm})} \cdot \dot{m}_{\text{unaccountable}}$$

$$\dot{m}_{Lkg,IP} = \frac{\dot{m}_{IPFW}}{(\dot{m}_{HPFW} + \dot{m}_{IPFW} + \dot{m}_{LPstm})} \cdot \dot{m}_{\text{unaccountable}}$$

$$\dot{m}_{Lkg,LP} = \frac{\dot{m}_{LPstm}}{(\dot{m}_{HPFW} + \dot{m}_{IPFW} + \dot{m}_{LPstm})} \cdot \dot{m}_{\text{unaccountable}}$$

The steam flows needed for the test corrections are calculated from the feedwater flows and the unaccountable cycle leakage flows.

$$\dot{m}_{HP} = \dot{m}_{HPFW} - \dot{m}_{Lkg,HP}$$
$$\dot{m}_{IP} = \dot{m}_{IPFW} - \dot{m}_{Lkg,IP}$$
$$\dot{m}_{LP} = \dot{m}_{LPstm}$$

Note that the portion of the unaccountable cycle leakage flow attributed to the LP system was not subtracted from the measured LP steam flow to determine the LP induction flow. Since the LP flow was measured as steam flow leaving the HRSGs and no steam leaks were identified in the relatively short piping runs from the flow measurement device to the turbine inlet, it was agreed to assume that all measured LP steam flow entered the turbine as induction steam and that leakage flow attributed to the LP system was lost somewhere upstream of the flow measurement device.

A-3 OUTPUT

During the test, steam turbine electrical output was measured using three single-phase watt meters and three single-phase var meters. The meters were connected in a phase to neutral configuration to existing calibrated station potential and current transformers located on a three wire Wye connected generator circuit.

A-3.1 Potential Transformer Ratio and Phase Angle Correction Factors

Prior to the tests, measurements were made which allowed the correction of test readings for PT and CT calibration data. Potential readings were made from phase to neutral on each phase on the secondary side of the PT's using a true RMS AC voltmeter. Due to the danger of opening the PT circuit and possibly tripping the unit, current measurements were made on the secondary side of the PT's using a low range clamp-on current meter. Power factor was not measured for the same reason and was assumed to be 0.85.

Table A-3.1-1 shows the data obtained for the PT circuit while Table A-3.1-2 shows the calibration data for the PT's.

Actual PT ratio correction factor (PTRCF) for each phase during the test are calculated using the following formula from ANSI/IEEE C57.13-1978:

$$RCF_c = RCF_o + \frac{B_c}{B_t}\,[RCF_d \cos(\Theta_t - \Theta_c) + 0.000291\gamma_d \sin(\Theta_t - \Theta_c)]\ \text{[C57.13-1978, Eq. (13)]}$$

where

RCF_o = ratio correction factor at zero burden
RCF_t = ratio correction factor at the calibration test point burden
RCF_c = ratio correction factor to be calculated at actual test burden
$RCF_d = RCF_t - RCF_o$

$$0.000291 = \frac{1}{3438}$$

Copyright ASME International
Provided by IHS under license with ASME
No reproduction or networking permitted without license from IHS Not for Resale

Table A-3.1-2 PT Calibration Data

	Label	Units	Phase 1	Phase 2	Phase 3
Burden at Zero	B_o	VA	0	0	0
Burden at Cal. Test Point	B_t	VA	200	200	200
Power Factor at Cal. Test Point	PF_c	Ratio	0.85	0.85	0.85
Phase Angle at Cal. Test Point	PA_c	deg	31.788	31.788	31.788
RCF @ 0 VA	RCF_o	Ratio	0.9979	0.9979	0.9979
RCF @ 200 VA, 0.85 PF	RCF_t	Ratio	1.00105	1.00105	1.00105
Phase Angle Error @ 0 VA	G_o	Min.	0.5	0.5	0.5
Phase Angle Error @ 200 VA, 0.85 PF	G_t	Min.	−0.46	−0.46	−0.46

3,438 = minutes of angle in one radian
B_o = zero burden
B_t = the burden at the calibration test point
B_c = the burden at which RCF and PAF will be calculated for the actual test condition
Θ_t = power factor at B_t, deg
Θ_c = power factor at B_c, deg
$\gamma_d = \gamma_t - \gamma_o$
γ_o = phase angle at B_o, min
γ_t = phase angle at B_t, min

The deviations of test and calibration power factor and phase angles are assumed to be insignificant; therefore, this equation reduces to the following:

$$RCF_c = RCF_o + \frac{B_c}{B_t}\,[RCF_d \cos(0) + 0.000291\gamma_d \sin(0)]$$

$$RCF_c = RCF_o + \frac{B_c}{B_t}\,[RCF_d \times 1 + 0.000291\gamma_d \times 0]$$

$$RCF_c = RCF_o + \frac{B_c}{B_t}\,[RCF_d]$$

Substituting $RCF_d = RCF_t - RCF_o$, yields the equation:

$$RCF_c = RCF_o + \frac{B_c}{B_t}\,[RCF_t - RCF_o]$$

which is simply a linear interpolation of the measured burden between the RCFs at the PT calibration test point burden and at zero burden.

Using this equation, the actual PT ratio correction for each phase is calculated:

$$\begin{aligned}\text{PTRCF1} &= 0.9979 + (24.941/200) \times (1.00105 - 0.9979)\\ &= 0.9983\\ \text{PTRCF2} &= 0.9979 + (24.133/200) \times (1.00105 - 0.9979)\\ &= 0.9982\\ \text{PTRCF3} &= 0.9979 + (28.548/200) \times (1.00105 - 0.9979)\\ &= 0.9983\end{aligned}$$

PT phase angle errors were assumed to be insignificant; therefore all PT phase angle correction factors (PTPACF) are assumed to be 1.0.

A-3.2 Current Transformer Ratio and Phase Angle Correction Factors

Calibration corrections should also be applied for the current transformers. Due to the danger of opening the CT circuit, and the relative insignificance of the CT correction factors, no attempt is made to measure actual CT currents with test instruments and station indications of primary current are used. Inspection of the CT calibration curve showed that the CT ratio correction factor (CTRCF) varied from 1.00014 at 100% rated current to 1.00016 at 50% rated current; therefore, an assumption of 1.00015 was used for all tests. CT phase angle errors were assumed insignificant so all CT phase angle correction factors (CTPACF) was assumed to be 1.0 for all tests.

Copyright ASME International
Provided by IHS under license with ASME
No reproduction or networking permitted without license from IHS Not for Resale

Table A-3.3 PT Voltage Drop Corrections

	Label	Units	Phase 1-N	Phase 2-N	Phase 3-N
Voltmeter 1 @ PT	$V1_0$	VAC	69.28	. . .	. . .
Voltmeter 2 @ PT	$V2_0$	VAC	69.14	. . .	. . .
VM Difference (= $V1_0 - V2_0$)	V_d	VAC	0.14	0.14	0.14
Voltmeter 1 @ PT	$V1_t$	VAC	69.28	68.95	69.63
Voltmeter 2 @ Watt Meter	$V2_t$	VAC	69.12	68.77	69.43
Corrected Reading at Watt Meter (=$V2_t - V_d$)	$V2_c$	VAC	69.26	68.91	69.57
Voltage Drop (=$V1_t - V2_c$)	V_{drop}	VAC	0.02	0.04	0.06
Voltage Drop Correction Factor (=$1 + V_{drop}/V1_t$)	PTVDC F	Ratio	1.0004	1.0006	1.0009

A-3.3 Potential Transformer Voltage Drop Corrections

Since the test watt meters are located in a remote panel, there may be a voltage drop from the potential transformer to the actual test watt transducers. Table A-3.3 shows measurements that were made using two true RMS AC voltmeters. The first step was to record the voltage measured by both meters at a common location and to determine an offset difference between the two meters. Voltmeter 1 was then left at the PT location and Voltmeter 2 was moved to the watt meter location. Thirty seconds of voltage measurements were then made between each phase to neutral, simultaneously at each location, and then averaged. The readings at the watt meters were corrected for the meter offset and subtracted from the readings at the PT's. The differences between the readings was found to be 0.02, 0.04, and 0.06 VAC. Since the voltage at the watt meters is lower than at the PT's, the recorded watts and vars will be low and a PT voltage drop correction factor (PTVDCF) larger than 1 will be applied to convert the watt and var readings at the watt meter location to what it would have been had the meters been directly connected to the PT's.

A-3.4 Conversion of Secondary Readings to Primary Values

Since the power measurements are made on the secondary side of potential and current transformers, the active and reactive power measurements recorded during the test must be multiplied by the turns ratio of the potential and current transformers and corrected for PT and CT correction factors. The basic equations for each phase "x" are as follows:

$$KWx = (SWx \times PTTRx \times CTTRx \times PTRCFx \times PTPACFx \times PTVDCx \times CTRCFx \times CTPACFx)/(1000)$$
$$KVarx = (SVarx \times PTTRx \times CTTRx \times PTRCFx \times PTPACFx \times PTVDCx \times CTRCFx \times CTPACFx)/(1000)$$

The total active and reactive power is then summed for phases 1, 2, and 3 using the following equations:

$$KW = KW1 + KW2 + KW3$$
$$KVar = KVar1 + KVar2 + KVar3$$

These calculations and a summary of the data are shown in Table A-3.4.

A-3.5 Power Factor Calculation

Power factor is calculated using the following equation:

$$PF = \frac{Watts_t}{[Watts_t^2 + Vars_t^2]^{0.5}}$$

where

PF = power factor
$Watts_t$ = total watts
$Vars_t$ = total vars

Using the data from Table A-3.4:

$$PF = 245{,}400/[(245{,}400)^2 + (118{,}853)^2]^{0.5} = 0.9$$

Copyright ASME International
Provided by IHS under license with ASME
No reproduction or networking permitted without license from IHS Not for Resale

Table A-3.4 Gross Generation

	Label	Units	Phase 1	Phase 2	Phase 3	Total
Secondary Watts at Meter (measured)	SW	Watts	338.273	342.906	342.294	
Secondary Vars at Meter (measured)	SV	Vars	160.831	167.760	167.101	
PT Voltage Ratio	PTTR	Ratio	120	120	120	
CT Current Ratio	CTTR	Ratio	2 000	2 000	2 000	
PT Voltage Drop Correction	PTVDCF	Ratio	1.0004	1.0006	1.0009	
PT Ratio Correction Factor	PTRCFs	Ratio	0.9983	0.9982	0.9983	
PT Phase Angle Correction Factor	PTPACF	Ratio	1	1	1	
CT Ratio Correction Factor	CTRCF	Ratio	1.00015	1.00015	1.00015	
CT Phase Angle Correction Factor	CTPACF	Ratio	1	1	1	
Primary Watts	KW	KW	81 092	82 211	82 097	245 400
Primary Vars	KVar	KVar	38 555	40 220	40 078	118 853

A-3.6 Exciter Power

The steam turbine reference for this unit is based on net electrical power supplied to the low side of the main power transformer. The current transformers used for the test are located before a 4,160 V station service bus that provides power to the exciter; therefore, exciter power must be subtracted from measured gross generator output.

Due to the relative insignificance of this parameter to the total steam turbine output, existing station instruments were used to measure exciter parameters. Exciter power was calculated from the current and voltage supplied to the exciter breaker using the following equation:

$$KW_{exc} = \frac{\sqrt{3} \times V \times A \times PF}{1\,000}$$

where

KW_{exc} = exciter power, kW
V = average phase to neutral field voltage, V
A = average phase current, A
PF = power factor
1 000 = conversion factor from watts to kW

Data obtained during the test (average of all three phases):

V = 4 120 VAC
A = 115 Amps AC
PF = 0.35

Therefore,

$$KW_{exc} = \frac{\sqrt{3} \times 4\,120 \times 115 \times 0.35}{1\,000} = 287 \text{ kW}$$

A-3.7 Auxiliary Power

The steam turbine reference for this unit included power supplied to a lube oil pump and gland steam condenser exhauster. The power to this equipment is supplied by a total plant balance of plant station services bus and no individual metering was available for this equipment. Therefore, by mutual agreement between the parties to the test, the design value was used for this parameter:

$$KW_{\text{aux}} = 25 \text{ kW}$$

A-3.8 Net Generator Output

The measured net generator output to be compared to the reference case is given by:

$$kW_{\text{net}} = 245\,400 - 287 - 25 = 245\,088 \text{ kW}$$

Copyright ASME International
Provided by IHS under license with ASME
No reproduction or networking permitted without license from IHS Not for Resale

A-4 CORRECTIONS

To compare the test generator output to the reference generator output, corrections must be applied to account for the deviations between the test and specified reference conditions. The corrections are taken from correction tables and curves developed using a thermal performance modeling program. The correction tables and curves for this example are shown in Figs. A-4-1 through A-4-8. Corrections are provided for the following parameters:

(a) HP steam flow
(b) HP turbine flow capacity
(c) HP steam temperature
(d) reheater system pressure drop
(e) net reheater flow change and reheat temperature
(f) LP induction steam flow and enthalpy
(g) exhaust pressure
(h) generator power factor
(i) generator hydrogen pressure (given as linear relation on power factor curve)

The test output will be corrected as follows:

$$kW_{\text{corrected}} = kW_{\text{test}} - \sum_{i=A}^{H} \Delta kW_i = kW_{\text{test}} - \Delta kW_{\text{total}}$$

ΔkW_{total} is the total output correction and is equal to the algebraic summation of the different corrections.

The following paragraphs describe the method for determining the corrections shown in Table A-5. (Symbols with no prime designate reference values of a variable. Symbols with a single prime designate measured test values of a variable. Symbols with a double prime designate test-corrected values of a variable. See Mandatory Appendix I for a more detailed explanation of the test-corrected variables.)

A-4.1 HP Steam Flow (Δ_{1A})

Enter the "HP Steam Flow for Various Hot Reheat Temperatures" correction curve at $\dot{m}'_{HP}$, and T'_{HRH} to determine the output correction for HP steam flow.

A-4.2 HP Steam Temperature (Δ_{2A})

Enter the "HP Steam Temperature" correction curve at $\dot{m}'_{HP}$ and T'_{HP} to determine the output correction for HP steam temperature.

A-4.3 HP Turbine Flow Capacity (Δ_{3A})

Find the percentage change in HP turbine flow capacity using the following formulas

$$\left(\frac{\dot{m}'_{HP} \times \dfrac{\sqrt{p_{HP}/v_{HP}}}{\sqrt{p'_{HP}/v'_{HP}}} \times S}{\dot{m}_{HP}} - 1 \right) \times 100\%$$

where

$$S = \frac{\sqrt{1 - \left(\dfrac{p'_{HPe}}{p'_{HP}} \times \dfrac{1 - \Delta p'_{Rht}}{1 - \Delta p_{Rht}} \times \dfrac{1 + \dfrac{\dot{m}_{IP}}{\dot{m}_{HP}}}{1 + \dfrac{\dot{m}'_{IP}}{\dot{m}'_{HP}}} \right)^2 \times \dfrac{T'_{HP}}{T_{HP}} \times \dfrac{T_{HRH}}{T'_{HRH}}}}{\sqrt{1 - \left(\dfrac{p'_{HPe}}{p'_{HP}} \right)^2}}$$

NOTE: Temperatures in this formula must be in absolute units.

$$S = \frac{\sqrt{1 - \left(\dfrac{3\,585}{12\,893} \times \dfrac{1 - 0.063}{1 - 0.10} \times \dfrac{1 + \dfrac{14.87}{144.4}}{1 + \dfrac{17.25}{149.86}} \right)^2 \times \dfrac{560.0 + 273.2}{565.0 + 273.2} \times \dfrac{565.0 + 273.2}{551.7 + 273.2}}}{\sqrt{1 - \left(\dfrac{3\,585}{12\,893} \right)^2}}$$

$$S = \frac{\sqrt{0.9172}}{\sqrt{0.9227}} = 0.9970$$

Copyright ASME International
Provided by IHS under license with ASME
No reproduction or networking permitted without license from IHS
Not for Resale

Using the steam conditions in Table A-1-1 and $v'_{HP} = 0.02807$ m^3/kg and $v_{HP} = 0.02751$ m^3/kg. Therefore, the change in HP turbine flow capacity is

$$\left(\frac{149.86 \times \frac{\sqrt{12\,750/0.02807}}{\sqrt{12\,893/0.02751}} \times 0.9970}{144.40} - 1 \right) \times 100\% = 1.86\%$$

Enter the "HP Turbine Flow Capacity" correction curve at 1.86% change in HP turbine flow capacity and $\dot{m}'_{HP}$ to determine the output correction for HP flow capacity.

A-4.4 Reheater System Pressure Drop (Δ_5)

Enter the "Reheater System Pressure Drop" correction curve at $\dot{m}'_{HP}$ and $\Delta p'_{RHT}$ to determine the output correction for the reheater system pressure drop.

A-4.5 Reheat Steam Temperature and Net Reheater Flow Change (Δ_6)

Enter the "Net Reheater Flow Change and Hot Reheat Temperature curve" at $\dot{m}'_{IP}$ and T'_{HRH} to determine the output correction accounting for both the IP induction flow and the hot reheat temperature. Note that the value of $\dot{m}'_{IP}$ used to determine the correction is the sum of the IP flow from the HRSG into the cold reheat line and the reheat sprays. If there are any process flows extracted from the reheat system between the HP exhaust and the IP inlet, these flows should be subtracted to determine the net flow added to the cold reheat steam.

A-4.6 HP Exhaust Enthalpy Effect on Reheater Heat Consumption (Δ_7)

Calculate the reference and the test HP efficiencies, η_{HP} and η'_{HP} respectively, based on the reference and test values of p_{HP}, T_{HP}, p_{CRH}, and h_{CRH}.

$$\eta = \frac{h_{HP} - h_{HPe}}{h_{HP} - h@(p_{HPe}, s_{HP})} = 0.8847$$

$$\eta' = \frac{h'_{HP} - h'_{HPe}}{h'_{HP} \equiv h@(p'_{HPe}, s'_{HP})} = 0.8654$$

Calculate test-adjusted hot reheat pressure, (adjusted for hot reheat flow and temperature at test conditions). Note that the temperatures must be in units of the absolute temperature scale, Kelvin (Rankine).

$$p''_{HRH} \cong p'_{HRH} \times \frac{\dot{m}_{HP} + \dot{m}_P}{\dot{m}'_{HP} + \dot{m}'_{IP}} \sqrt{\frac{T_{HRH}}{T'_{HRH}}} = 3\,358 \times \frac{144.4 + 14.87}{149.86 + 17.25} \sqrt{\frac{565.0 + 273.2}{551.7 + 273.2}} = 3\,226 \text{ kPa}$$

Calculate change in adjusted hot reheat enthalpy from reference conditions, using the test-adjusted hot reheat pressure at reference temperature.

$$\begin{aligned} \Delta h_{HRH} &= h''_{HRH} - h_{HRH} \\ &= h@(p''_{HRH}, T_{HRH}) - h@(p_{HRH}, T_{HRH}) \\ &= 3\,599.7 - 3\,600.6 = -0.9 \text{ kJ/kg} \end{aligned}$$

Calculate test-adjusted HP exhaust pressure, based on the adjusted HRH pressure and reference reheater pressure drop

$$p''_{HPe} = \frac{p''_{HRH}}{1 - \Delta p_{RHTR}} = \frac{3\,226}{1 - 0.1} = 3\,584 \text{ kPa}$$

Calculate HP section available energy (AE) at reference and test-adjusted conditions

$$\begin{aligned} AE &= h_{HP} - h@(p_{HPe}, s_{HP}) = 404.0 \text{ kJ/kg} \\ AE'' &= h_{HP} - h@(p''_{HPe}, s_{HP}) = 396.1 \text{ kJ/kg} \end{aligned}$$

Calculate the change in HP exhaust enthalpy, based on the HP section efficiencies and available energy calculated above.

$$\begin{aligned} \Delta h_{HPe} &= h''_{HPe} - h_{HPe} \\ h_{HPe} &= h_{HP} - \eta \times AE \\ h''_{HPe} &= h_{HP} - \eta' \times AE'' \\ \Delta h_{HPe} &= \eta \times AE - \eta' \times AE'' = 0.8847 \times 404.0 - 0.8654 \times 396.1 = 14.7 \text{ kJ/kg} \end{aligned}$$

Copyright ASME International
Provided by IHS under license with ASME
No reproduction or networking permitted without license from IHS
Not for Resale

Determine HP turbine leakages as a fraction of test HP section steam flow

$$f' = \frac{\dot{m}'_L}{\dot{m}'_{HP}} = \frac{0.99 + 0.17 + 4.84}{149.86} = 0.0400$$

Calculate change in HP steam flow due to tested HP section efficiency being different than reference efficiency.

$$\begin{aligned}\Delta\dot{m}_{HP1} &\equiv \frac{\dot{m}_{HP} \times (1 - f') \times (\Delta h_{HPe} - \Delta h_{HRH}) - \dot{m}_{IP} \times (\Delta h_{HRH})}{(1 - f') \times (h_{HRH} + \Delta h_{HRH} - h_{HPe} - \Delta h_{HPe}) + (h_{HP} - h_{BLRi})} \\ &= \frac{144.40 \times (1 - 0.0400) \times [14.7 - (-0.9)] - 14.87 \times (-0.9)}{(1 - 0.0400) \times [3\,600.7 + (-0.9) - 3\,153.0 - (14.7)] + (3\,510.4 - 186.1)} \\ &= \frac{2\,175.9}{3\,739.1} = 0.58 \text{ kg/s}\end{aligned}$$

Calculate the value of HP steam flow to use in the correction formulation.

$$\dot{m}_{HP} - \Delta\dot{m}_{HP1} = 144.40 - 0.58 = 143.82 \text{ kg/s}$$

Enter the "HP Steam Flow for Various Hot Reheat Temperatures" correction formulation at the reference hot reheat temperature, T_{HRH}, and the reference HP steam flow less the change in flow calculated above, $\dot{m}_{HP} - \Delta\dot{m}_{HP1} = 143.82$ kg/s, to determine the correction for the effect of HP exhaust enthalpy on output.

A-4.7 HP Exhaust Flow Effect on Reheater Heat Consumption (Δ_8)

Determine HP leakages as fraction of HP steam flow at reference conditions.

$$f \equiv \frac{\dot{m}_L}{\dot{m}_{HP}} \; f = \frac{\dot{m}_L}{\dot{m}_{HP}} = \frac{144.4 - 140.89}{144.40} = 0.0243$$

Since $(f' - f) > 0$, the correction for HP exhaust flow is determined from a change in reheat spray flow. (Note h_{BLRi} = enthalpy of LP feedwater into the HRSG)

$$\begin{aligned}\Delta\dot{m}_{RHTspray} &= \dot{m}_{HP} \times \frac{(f' - f) \times (h_{HRH} - h_{HPe})}{(h_{HRH} + \Delta h_{HRH} - h_{BLRi})} \\ &= \frac{144.4 \times (0.0400 - 0.0243) \times (3\,600.7 - 3\,153.0)}{[3\,600.7 + (-0.9) - 186.1]} \\ &= \frac{1\,015.0}{3\,413.7} = 0.30 \text{ kg/s}\end{aligned}$$

Calculate the value of the net change in reheat steam flow to use with the correction formulation.

$$\dot{m}_{IP} - \Delta\dot{m}_{RHTspray} = 14.87 - 0.30 = 14.57 \text{ kg/s}$$

Enter the "Net Reheater Flow Change and Hot Reheat Temperature curve" correction formulation at the reference hot reheat temperature, T_{HRH}, and the reference net reheater flow change less the change in flow calculated above, $\dot{m}_{IP} - \Delta\dot{m}_{RHTspray} = 14.57$ kg/s, to determine the correction for the effect of HP exhaust flow on output.

A-4.8 LP Admission Flow and Enthalpy (Δ_9)

Use $\dot{m}'_{LP}$ and h'_{LP} on the "LP Admission Flow and Enthalpy" correction curve.

A-4.9 Exhaust Pressure (Δ_{13})

Use exhaust flow = $\dot{m}'_{HP} + \dot{m}'_{IP} + \dot{m}'_{LP}$ — [gland sealing steam leak-offs that do not re-enter the turbine (calculated or measured)], and p'_{exhst} on the "Exhaust Pressure Correction Curve." From the reference heat balance, the packing flow leakage not reentering the steam path is 0.33 kg/s. Therefore, the exhaust flow to use to determine the exhaust pressure correction is 149.86 + 17.25 + 7.59 − 0.33 = 174.37 kg/s.

Copyright ASME International
Provided by IHS under license with ASME
No reproduction or networking permitted without license from IHS Not for Resale

Table A-5 Output Correction Factors

	Output Correction, ΔkW
HP steam flow	$\Delta_{1A} = 8\,523$
HP steam temperature	$\Delta_{2A} = -604$
HP turbine flow capacity	$\Delta_{3A} = 540$
Reheater system pressure drop	$\Delta_5 = 1\,538$
Net reheat flow change and reheat temperature	$\Delta_6 = -315$
HP exhaust enthalpy effect on reheater heat consumption	$\Delta_7 = -916$
HP exhaust flow effect on reheater heat consumption	$\Delta_8 = -305$
LP induction flow and enthalpy	$\Delta_9 = 110$
Exhaust pressure	$\Delta_{13} = -4\,172$
Generator power factor	$\Delta_{14} = 194$
Hydrogen pressure	$\Delta_{15} = 10$
Total output correction	$\Delta_{\text{total}} = 3\,523$

A-4.10 Generator Power Factor (Δ_{14})

Using the "Generator Loss curve" subtract the generator losses at PF' and kW' from the generator losses at PF and kW':

$$\begin{aligned} PF' &= 0.9 \\ KW' &= 245\,400 \text{ kW (gross)} \\ PF'_{\text{loss}} &= 1\,922 \text{ kW} \end{aligned}$$

$$\begin{aligned} PF &= 0.85 \\ PF_{\text{loss}} &= 2\,116 \text{ kW} \end{aligned}$$

$$\begin{aligned} PF_{\text{loss}}\,(\Delta_{14}) &= PF_{\text{loss}} - PF'_{\text{loss}} \\ &= 2\,116 - 1\,922 \\ &= 194 \text{ kW} \end{aligned}$$

A-4.11 Generator Hydrogen Pressure (Δ_{15})

Calculate the correction by multiplying the linear relationship of change in output per unit of change in hydrogen pressure given on the power factor correction curve by the difference between the test hydrogen pressure and the reference hydrogen pressure:

$$\begin{aligned} PH2' &= 414 \text{ kPa} \\ PH2 &= 400 \text{ kPa} \\ PH2_{\text{diff}} &= \text{PH2} - \text{PH2}' \\ &= 414 - 400 \\ &= 14 \text{ kPa} \end{aligned}$$

From the generator loss curve, 0.725 kW decrease in losses per kPa decrease in Hydrogen pressure. Therefore

$$PH2_{\text{loss}}\,(\Delta_{15}) = 14 \times 0.725 = 10 \text{ kW}$$

A-5 CORRECTED OUTPUT

To obtain the corrected generator output, the total output correction in Table A-5 is subtracted from the test generator output.

$$kW_{\text{corrected}} = kW_{\text{test}} - \Delta kW_{\text{total}} = 245\,088 - 3\,523 = 241\,565 \text{ kW}$$

Copyright ASME International
Provided by IHS under license with ASME
No reproduction or networking permitted without license from IHS
Not for Resale

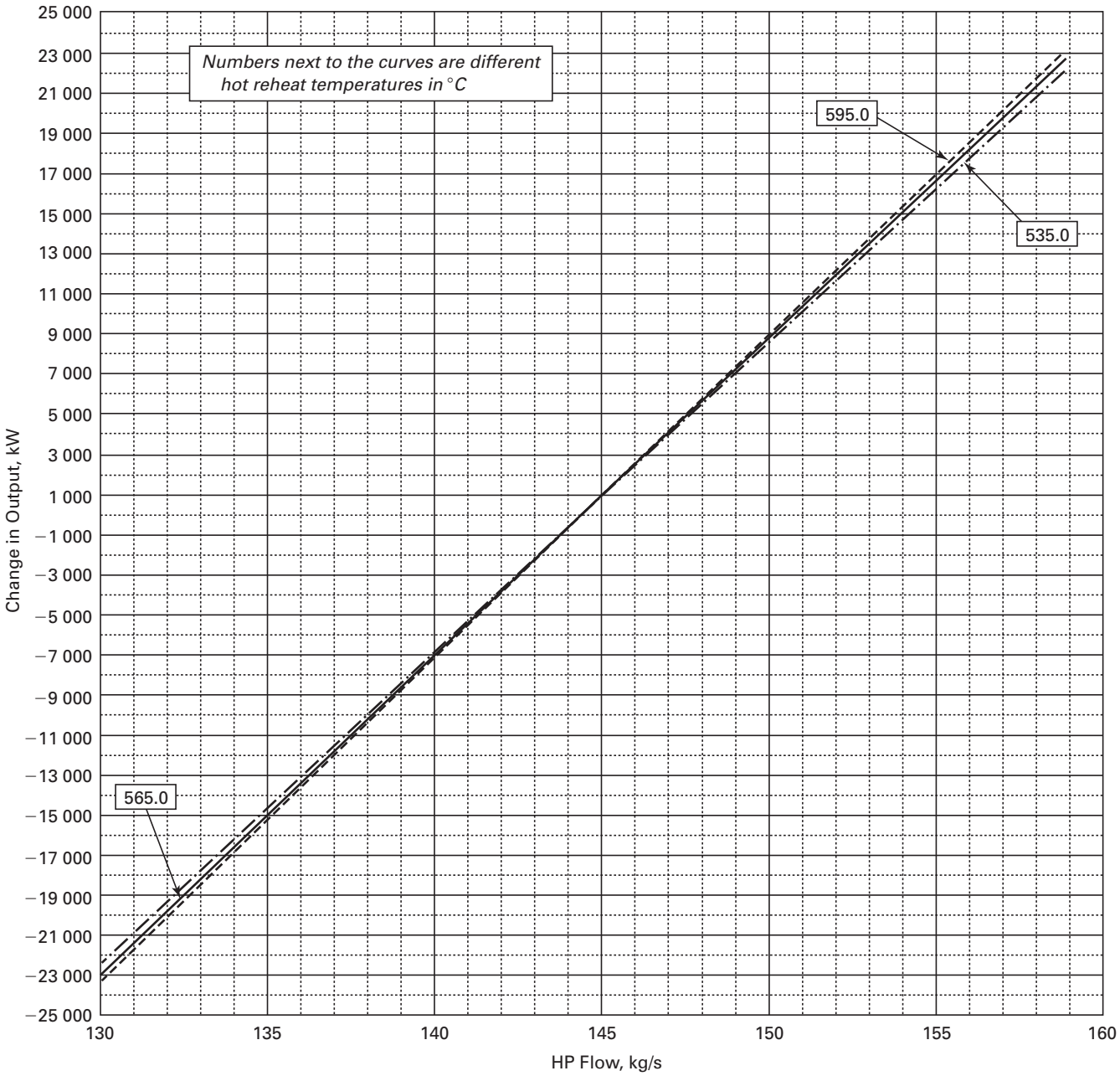

HP Flow, kg/s	Change in Output, kW		
	Hot Reheat Temperatures, °C		
	535.0	565.0	595.0
129.96	−22 560	−23 031	−23 496
137.18	−11 243	−11 475	−11 707
144.40	0	0	0
151.62	11 143	11 372	11 605
158.84	22 203	22 676	23 145

Fig. A-4-1 Sample Output Correction for HP Flow at Various Hot Reheat Temperatures

Copyright ASME International
Provided by IHS under license with ASME
No reproduction or networking permitted without license from IHS
Not for Resale

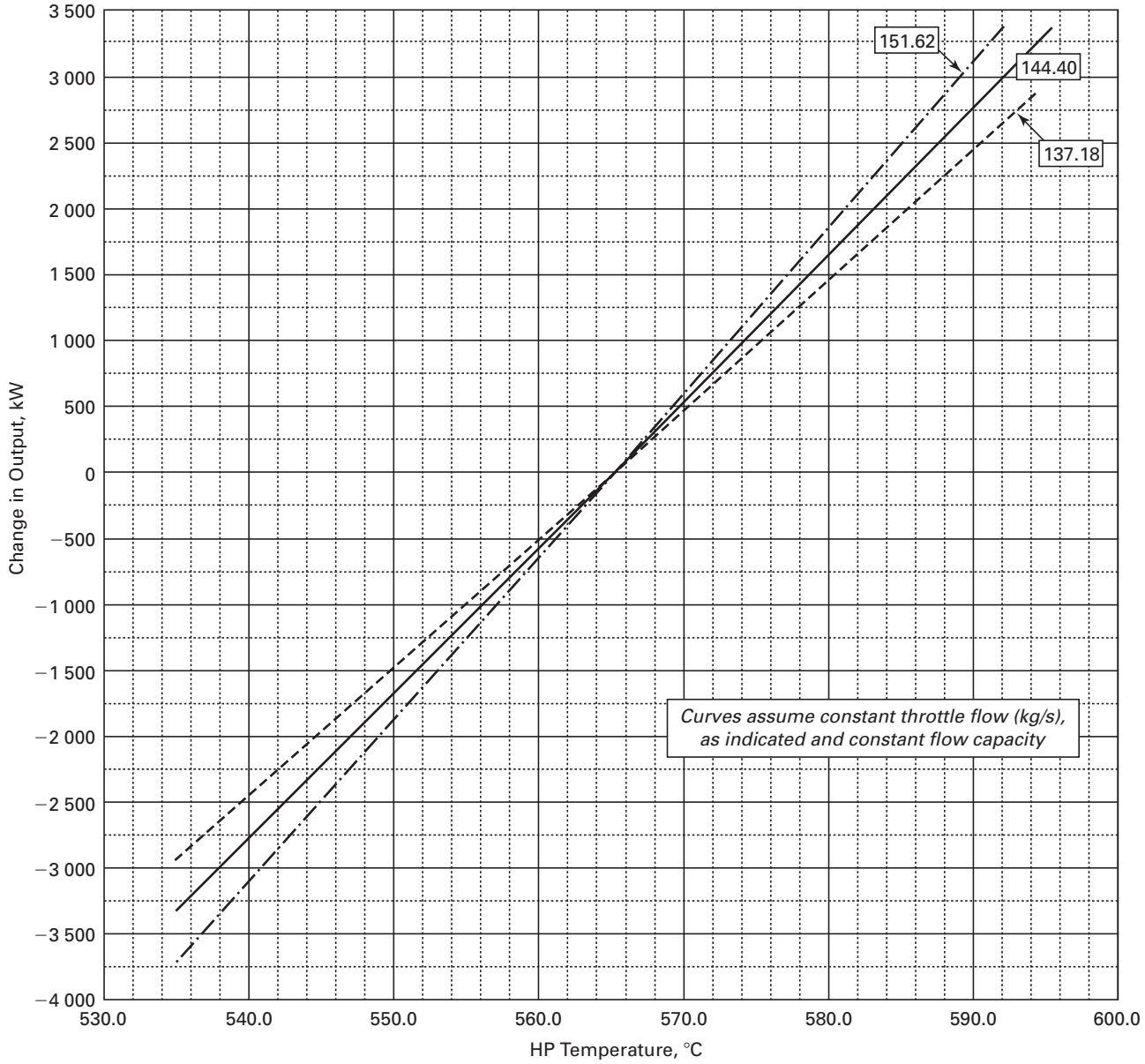

HP Temperature, °C	Change in Output, kW		
	Throttle Flow, kg/s		
	137.18	144.40	151.62
535.0	−2 946	−3 327	−3 717
550.0	−1 473	−1 664	−1 859
565.0	0	0	0
580.0	1 473	1 664	1 859
595.0	2 946	3 327	3 717

Fig. A-4-2 Sample Output Correction for HP Temperature at Various HP Flows

Copyright ASME International
Provided by IHS under license with ASME
No reproduction or networking permitted without license from IHS
Not for Resale

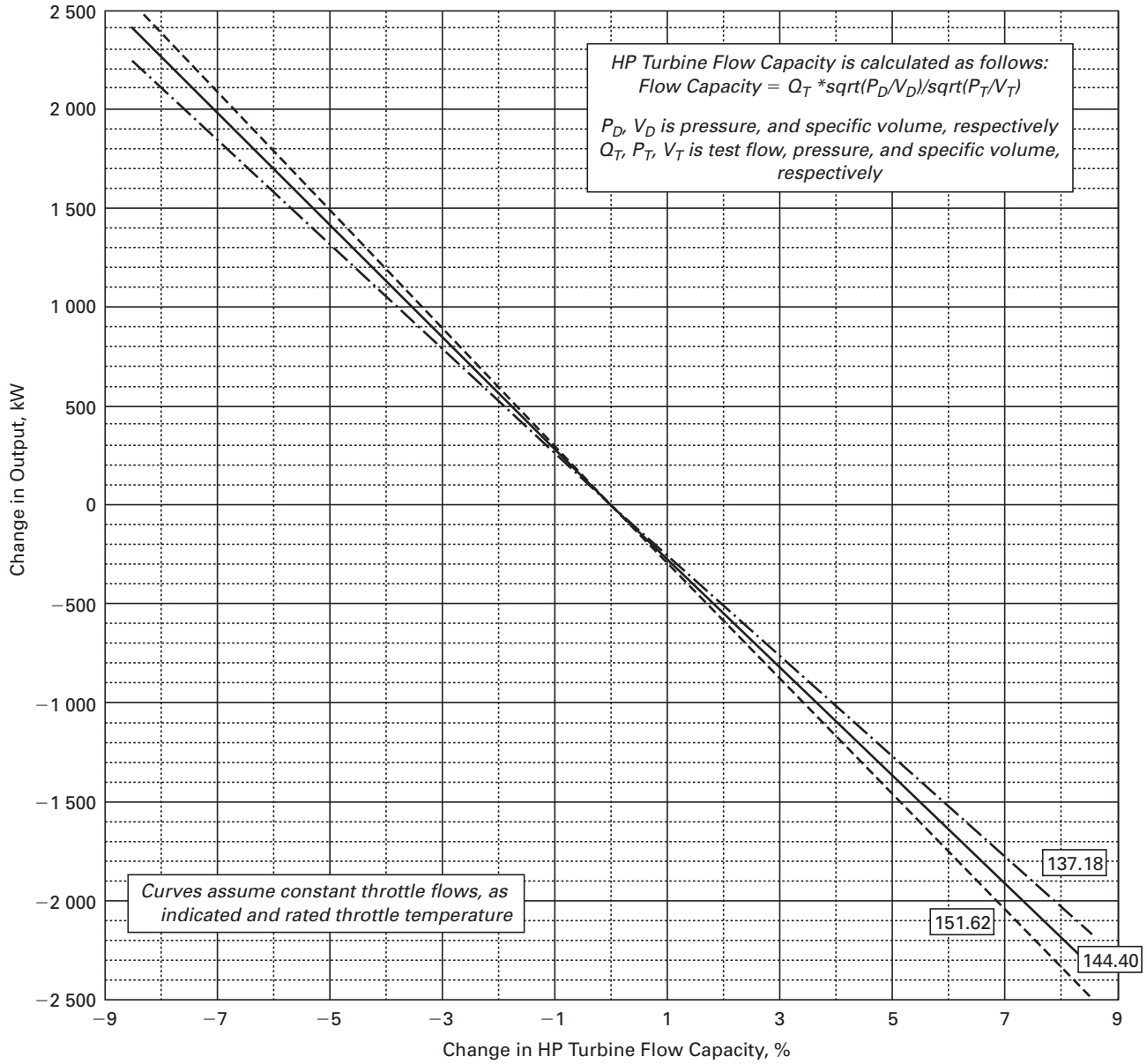

% Change in HP Turbine Flow Capacity	Change in Output, kW		
	Throttle Flow, kg/s		
	137.18	144.40	151.62
−8.50	2 243	2 400	2 536
−5.00	1 313	1 404	1 483
0.00	0	0	0
5.00	−1 284	−1 378	−1 474
8.50	−2 168	−2 332	−2 487

Fig. A-4-3 Sample Output Correction for HP Turbine Flow Capacity at Various HP Flows

Copyright ASME International
Provided by IHS under license with ASME
No reproduction or networking permitted without license from IHS
Not for Resale

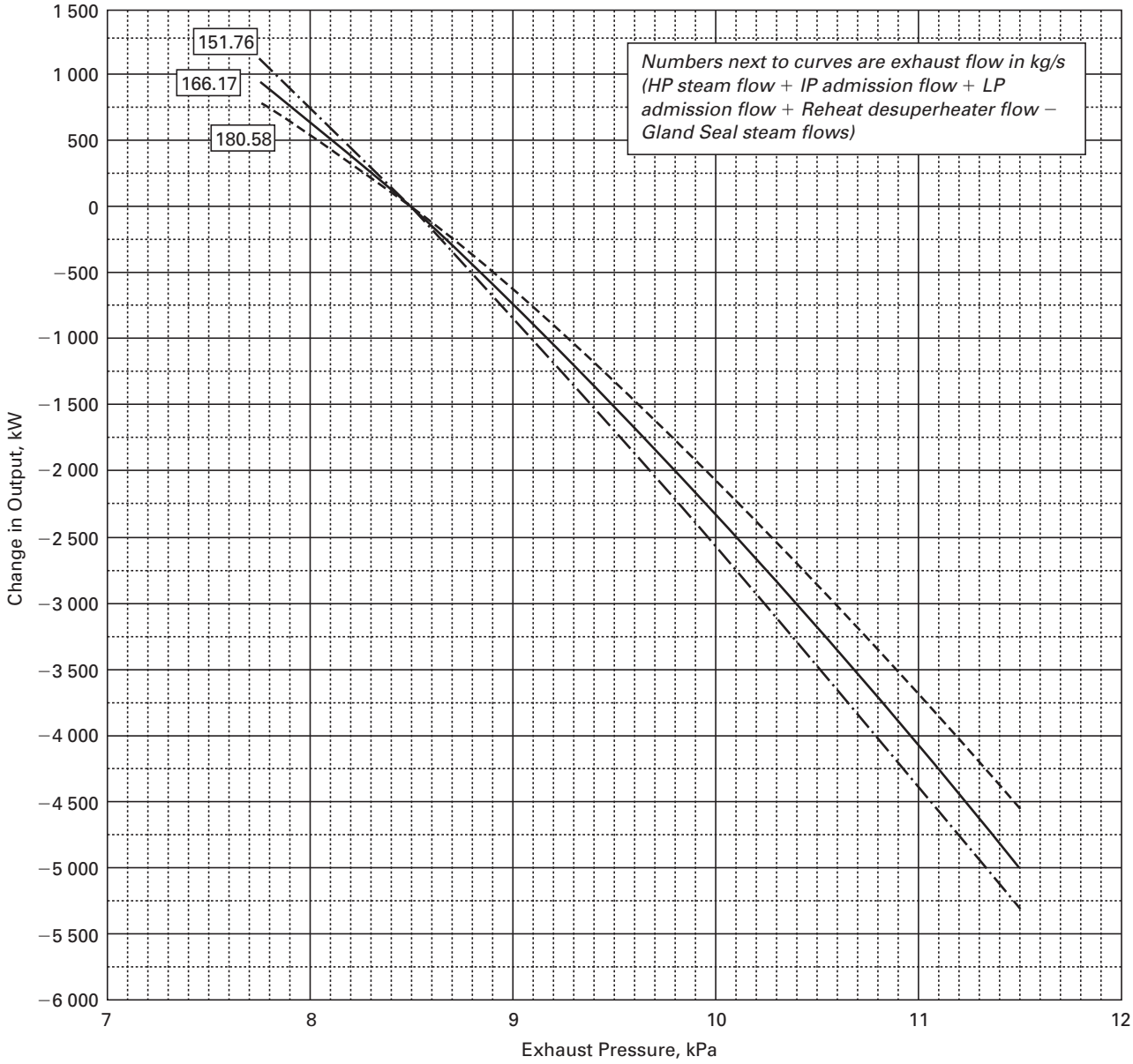

Exhaust Pressure, kPa	Change in Output, kW		
	Exhaust Flow, kg/s		
	151.76	166.17	180.58
7.75	1 114	955	795
8.50	0	0	0
9.25	−1 248	−1 116	−955
10.00	−2 569	−2 331	−2 051
10.75	−3 927	−3 623	−3 260
11.50	−5 312	−5 008	−4 545

Fig. A-4-4 Sample Output Correction for Exhaust Pressure at Various Exhaust Flows

Copyright ASME International
Provided by IHS under license with ASME
No reproduction or networking permitted without license from IHS
Not for Resale

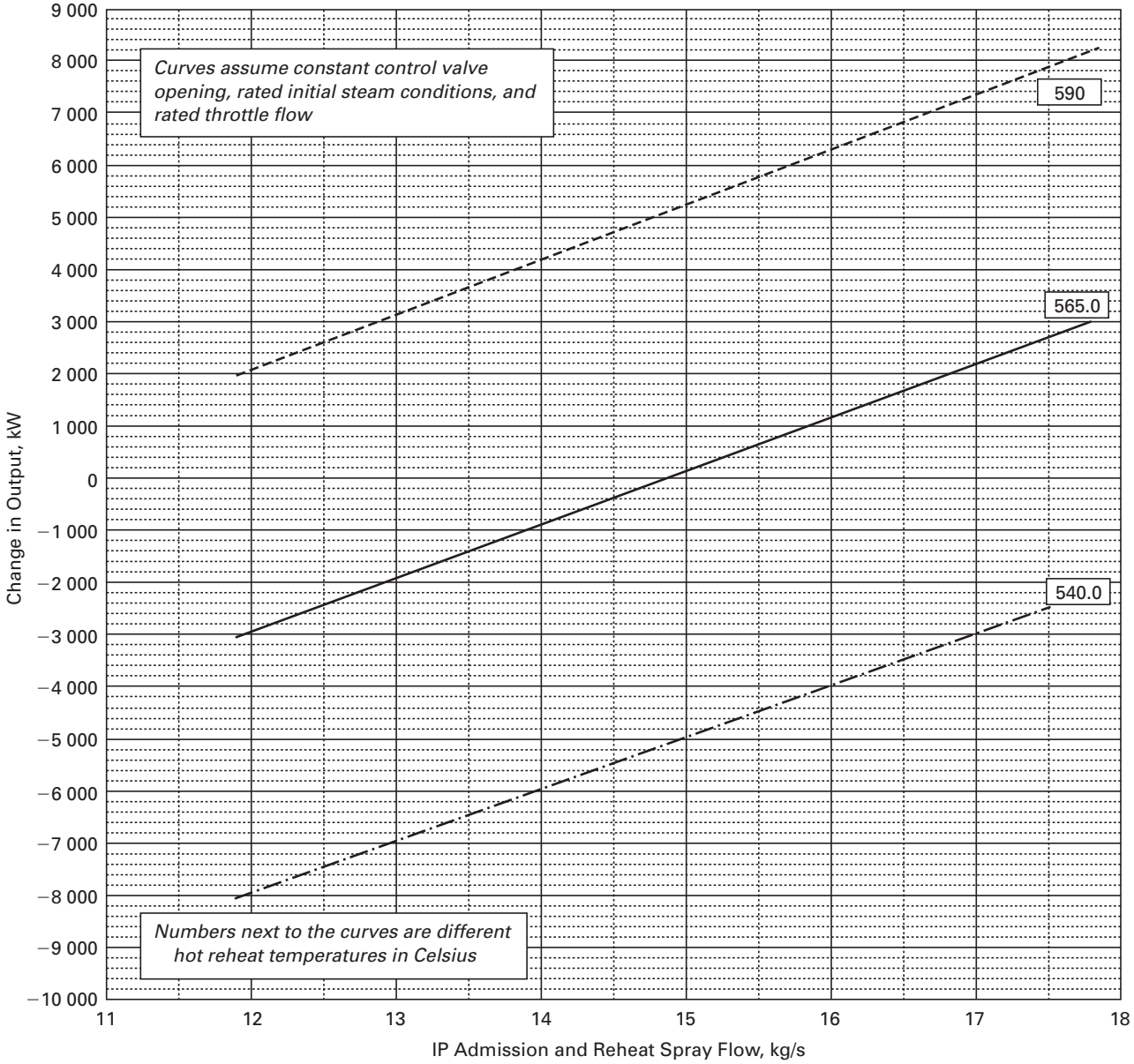

IP Admission and Reheat Spray Flow, kg/s	Change in Output, kW		
	Hot Reheat Temperatures, °C		
	540.0	565.0	590
11.89	−8 047	−3 045	1 958
13.38	−6 572	−1 523	3 528
14.87	−5 096	0	5 098
16.35	−3 621	1 522	6 667
17.84	−2 146	3 045	8 237

Fig. A-4-5 Sample Output Correction for IP Admission and Reheat Spray Flows and Hot Reheat Temperature

Copyright ASME International
Provided by IHS under license with ASME
No reproduction or networking permitted without license from IHS
Not for Resale

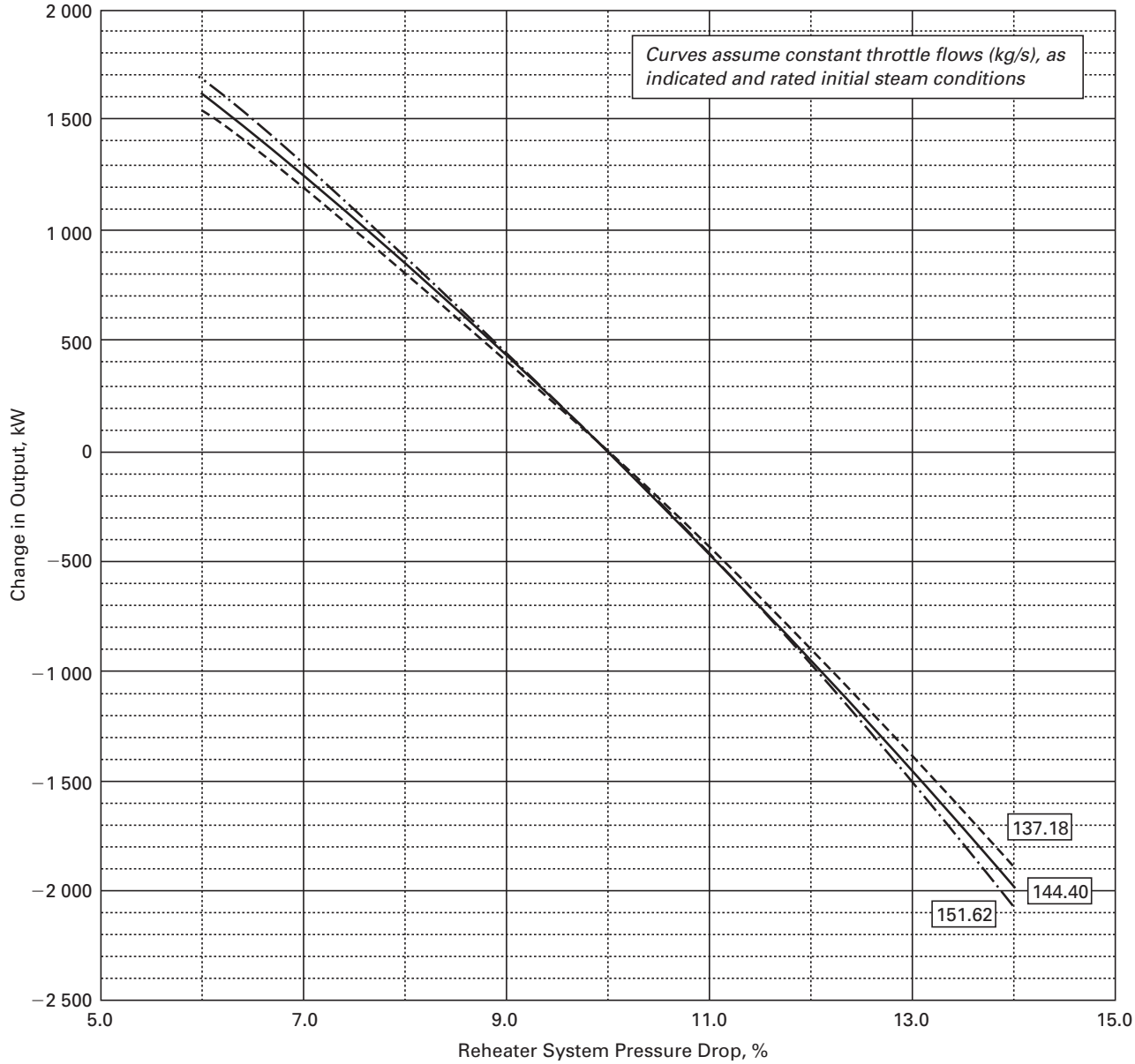

Reheater Pressure Drop, %	Change in Output, kW		
	Throttle Flow, kg/s		
	137.18	144.40	151.62
6.0	1 550	1 623	1 694
8.0	812	850	887
10.04	0	0	0
12.0	−900	−942	−984
14.0	−1 895	−1 984	−2 073

Fig. A-4-6 Sample Output Correction for Reheater Pressure Drop at Various HP Flows

Copyright ASME International
Provided by IHS under license with ASME
No reproduction or networking permitted without license from IHS
Not for Resale

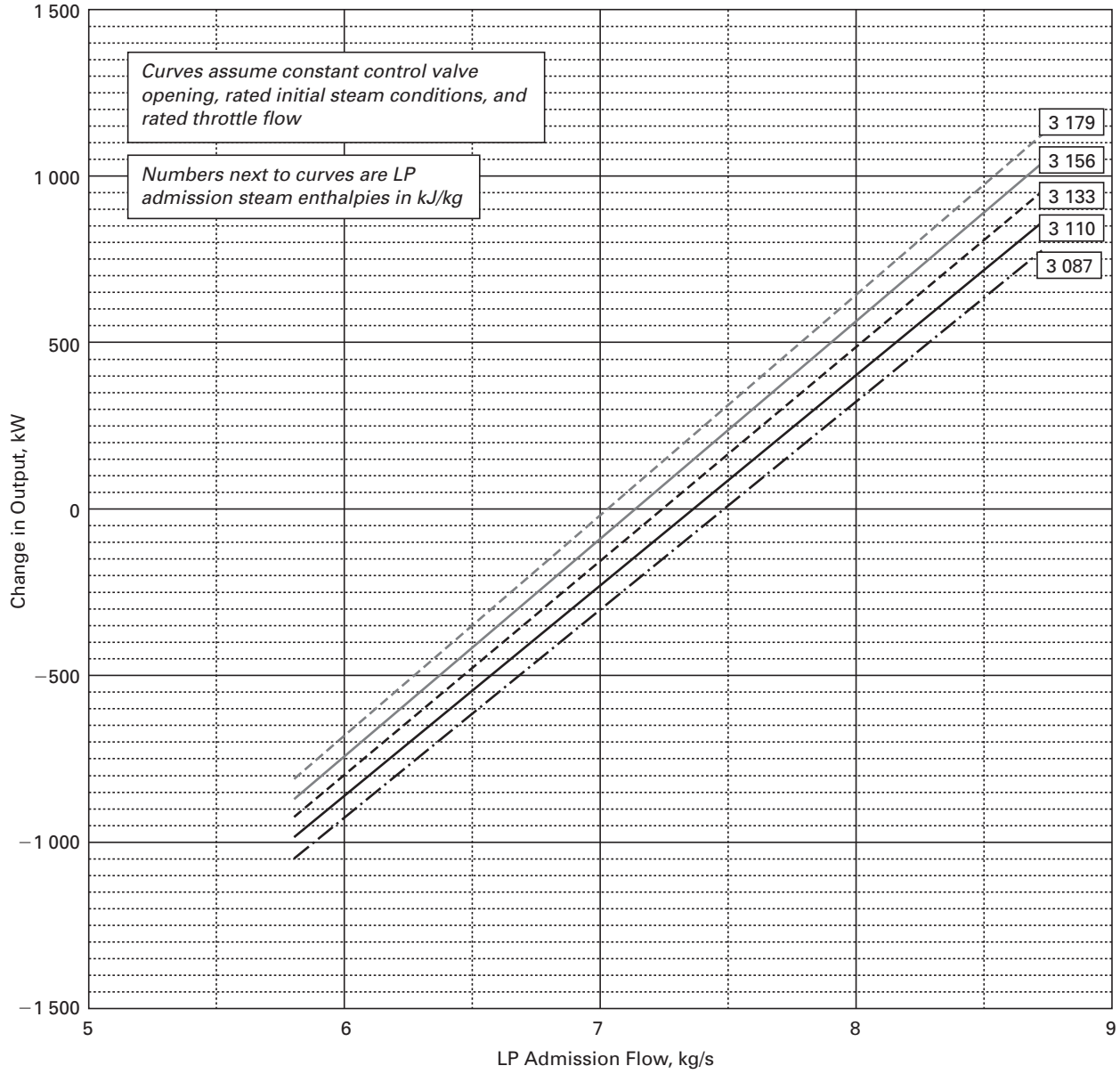

LP Admission Flow, kg/s	Change in Output, kW				
	LP Admission Enthalpy, kJ/kg				
	3 087	3 110	3 133	3 156	3 179
5.80	−1 048	−990	−931	−875	−817
7.25	−144	−72	0	73	145
8.70	759	846	933	1 020	1 107

Fig. A-4-7 Sample Output Correction for LP Admission Flow and Enthalpy

Copyright ASME International
Provided by IHS under license with ASME
No reproduction or networking permitted without license from IHS
Not for Resale

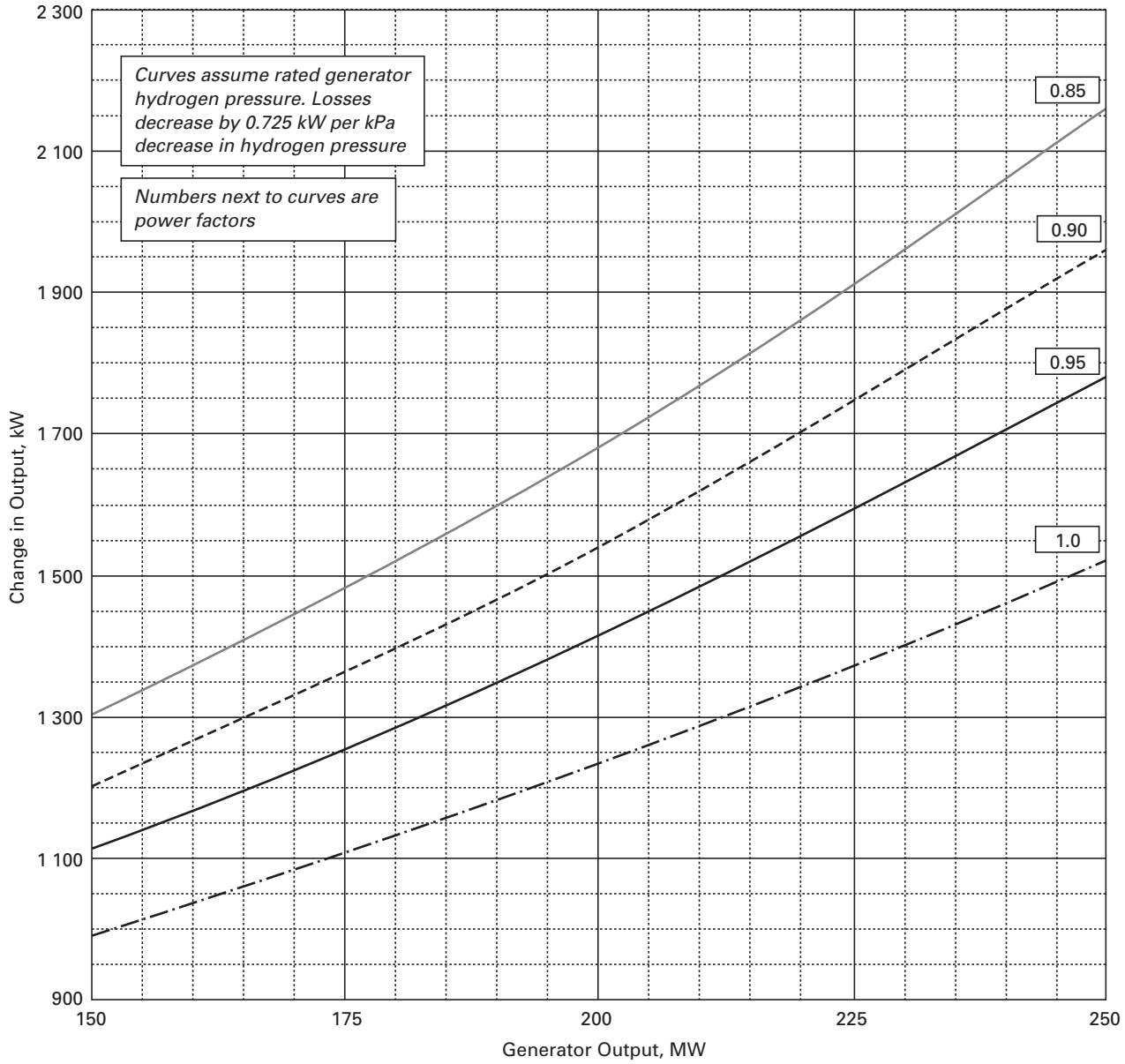

Generator Output, MW	Generator Losses			
	Power Factor			
	0.85	0.90	0.95	1.0
150	1 300	1 200	1 110	990
200	1 680	1 540	1 410	1 230
250	2 160	1 960	1 780	1 520

Fig. A-4-8 Sample Generator Loss Curve

Copyright ASME International
Provided by IHS under license with ASME
No reproduction or networking permitted without license from IHS
Not for Resale

NONMANDATORY APPENDIX B
SAMPLE TEST UNCERTAINTY CALCULATION

B-1 SAMPLE CALCULATION

The following section discusses the post-test uncertainty calculation for the triple pressure reheat steam turbine generator calculated in Nonmandatory Appendix A:

(a) The uncertainty calculations in this sample calculation are based on the following assumptions on instruments and procedures:

(*1*) Standard commercially available high quality test instruments according to ASME PTC 19 series and no station instruments.

(*2*) All of installed test instruments are calibrated, and the reference standards traceable to National standards and the reference standards have an uncertainty at least 4 times less than the test instruments. The instrument calibration uncertainty per Table B-1.

(*3*) Dedicated test electronic data acquisition system.

(*4*) One hour test with 120 readings per each primary variable.

(*5*) The uncertainty impact of unlisted parameters was neglected.

(b) This uncertainty calculation is divided into the following steps:

(1) Define the error source and their elemental error for each measured parameter (e.g., temperature, pressure, differential pressure, and electrical output, etc.).

(2) Define the elemental error in each calculated variable using the uncertainty in measured parameters (e.g., flow using differential pressure measurement, etc.).

(3) Define the sensitivity for each of the measured and calculated variables.

(4) Compile an uncertainty analysis summary.

(c) Create an uncertainty table for each individual parameter as follows:

(*1*) Table B-2 applies to differential pressure for HP feed-water, IP feed-water, LP steam, HP spray water flow, and IP spray water flow measurements.

(*2*) Table B-3 applies to the calibrated HP feed-water flow measurements.

(*3*) Table B-4 applies to IP feed flow, HP spray-water flow, IP spray-water flow measurements.

(*4*) Table B-5 applies to LP steam flow measurements.

(*5*) The uncertainty of the total flow is calculated in Tables B-6, B-7, and B-8. In calculating these uncertainties, care must be taken to include the correlated and the noncorrelated uncertainties. For example, in situations wherein the HP feedflow element to HRSG #1 and HRSG #2 are calibrated against the same standard, then the systematic uncertainty of the feedflow element to HRSG #1 and the systematic uncertainty of the feedflow element to HRSG #2 are not independent of each other. In such cases, correlated systematic uncertainty must be considered in the determination of the HP total feedwater flow uncertainty.

(*6*) Table B-9 applies to HP steam, Cold Reheat steam, Hot Reheat steam, Cross-Over steam, LP induction, HP feedwater, IP feedwater, main steam spray, reheat spray pressure measurements.

(*7*) Table B-10 applies to exhaust pressure measurements. Usually for LP exhaust pressure measurements, the spatial uncertainty is greater than instrument uncertainty. Therefore, the spatial uncertainty is taken into account while calculating the test uncertainty. The spatial uncertainty is calculated as the product of τ (which is known as substitute student t distribution statistic, and is a function of the number of measurement locations) and the Range (defined as the difference of maximum value of the reading minus the minimum value of the reading). The value of τ can be obtained from any elementary textbook on statistics.

(*8*) Tables B-12 through B-15 apply to HP steam, Cold Reheat steam, Hot Reheat steam, cross-over steam, LP admission steam, HP feed water, IP feedwater, condensate temperature measurements.

(*9*) Table B-16 lists the sensitivities for the various parameters based on correction curves in Nonmandatory Appendix A.

(*10*) Table B-17 is the test uncertainty table. Therefore, total test uncertainty is $\pm 0.52\%$.

Copyright ASME International
Provided by IHS under license with ASME
No reproduction or networking permitted without license from IHS
Not for Resale

Table B-1 Instrument Calibration Uncertainty

Test Point #	Tag #	Description	Instrument Type	Calibration Uncertainty
		Differential Pressures		
1	FT01	Condensate mass flow rate to LP drum HRSG #1	Differential pressure transmitter	± 0.1%
2	FT02	Condensate mass flow rate to LP drum HRSG #2	Differential pressure transmitter	± 0.1%
3	FT03	HP feedwater to HRSG #1	Differential pressure transmitter	± 0.1%
4	FT04	HP feedwater to HRSG #2	Differential pressure transmitter	± 0.1%
5	FT05	IP feedwater to HRSG #1	Differential pressure transmitter	± 0.1%
6	FT06	IP feedwater to HRSG #2	Differential pressure transmitter	± 0.1%
7	FT07	Main steam spray to HRSG #1	Differential pressure transmitter	± 0.1%
8	FT08	Main steam spray to HRSG #2	Differential pressure transmitter	± 0.1%
9	FT09	Reheat spray to HRSG #1	Differential pressure transmitter	± 0.1%
10	FT10	Reheat spray to HRSG #2	Differential pressure transmitter	± 0.1%
11	FT11	LP steam from HRSG #1	Differential pressure transmitter	± 0.1%
12	FT12	LP steam from HRSG #2	Differential pressure transmitter	± 0.1%
		Pressures		
21	FT01	Pressure of condensate to LP drum HRSG #1	Pressure transmitter	± 0.1%
22	FT02	Pressure of condensate to LP drum HRSG #2	Pressure transmitter	± 0.1%
23	FT03	Pressure of HP feedwater to HRSG #1	Pressure transmitter	± 0.1%
24	FT04	Pressure of HP feedwater to HRSG #2	Pressure transmitter	± 0.1%
25	FT05	Pressure of IP feedwater to HRSG #1	Pressure transmitter	± 0.1%
26	FT06	Pressure of IP feedwater to HRSG #2	Pressure transmitter	± 0.1%
27	FT07	Pressure of mainsteam spray to HRSG #1	Pressure transmitter	± 0.1%
28	FT08	Pressure of mainsteam spray to HRSG #2	Pressure transmitter	± 0.1%
29	FT09	Pressure of reheat spray to HRSG #1	Pressure transmitter	± 0.1%
30	FT10	Pressure of reheat spray to HRSG #2	Pressure transmitter	± 0.1%
31	FT11	Pressure of LP steam from HRSG #1	Pressure transmitter	± 0.1%
32	FT12	Pressure of LP steam from HRSG #2	Pressure transmitter	± 0.1%
51	PT01	HP steam pressure before stop valve	Pressure transmitter	± 0.1%
52	PT02	HP steam pressure before blading	Pressure transmitter	± 0.1%
53	PT03	Steam pressure at HP exhaust	Pressure transmitter	± 0.1%
54	PT04	IP steam pressure before stop valve	Pressure transmitter	± 0.1%
55	PT05	IP steam pressure before blading	Pressure transmitter	± 0.1%
56	PT06	Steam pressure at IP exhaust	Pressure transmitter	± 0.1%
57	PT07	LP steam pressure before mix	Pressure transmitter	± 0.1%
58	PT08	Steam pressure before LP turbine	Pressure transmitter	± 0.1%
71	PT09	LP exhaust pressure #1	Pressure transmitter	± 0.1%
72	PT10	LP exhaust pressure #2	Pressure transmitter	± 0.1%
73	PT11	LP exhaust pressure #3	Pressure transmitter	± 0.1%
74	PT12	LP exhaust pressure #4	Pressure transmitter	± 0.1%
75	PT13	LP exhaust pressure #5	Pressure transmitter	± 0.1%
76	PT14	LP exhaust pressure #6	Pressure transmitter	± 0.1%
77	PT15	LP exhaust pressure #7	Pressure transmitter	± 0.1%
78	PT16	LP exhaust pressure #8	Pressure transmitter	± 0.1%
81	PT25	Barometric pressure	Pressure transmitter	± 0.1%
		Temperatures		
101	TC01	HP steam temperature #1 before stop valve of line #1	Thermocouple	± 0.60°K
102	TC02	HP steam temperature #2 before stop valve of line #1	Thermocouple	± 0.60°K
103	TC03	HP steam temperature #1 before stop valve of line #2	Thermocouple	± 0.60°K
104	TC04	HP steam temperature #2 before stop valve of line #2	Thermocouple	± 0.60°K
105	TC05	HP steam temperature #1 at exhaust	Thermocouple	± 0.40°K
106	TC06	HP steam temperature #2 at exhaust	Thermocouple	± 0.40°K
107	TC07	IP steam temperature #1 before stop valve of line #1	Thermocouple	± 0.60°K
108	TC08	IP steam temperature #2 before stop valve of line #1	Thermocouple	± 0.60°K
109	TC09	IP steam temperature #1 before stop valve of line #2	Thermocouple	± 0.60°K
110	TC10	IP steam temperature #2 before stop valve of line #2	Thermocouple	± 0.60°K
111	TC11	IP steam temperature #1 at IP exhaust	Thermocouple	± 0.40°K

--`,,```,,,,````-`-`,,`,,`,`,,`---

Copyright ASME International
Provided by IHS under license with ASME
No reproduction or networking permitted without license from IHS
Not for Resale

Table B-1 Instrument Calibration Uncertainty (Cont'd)

Test Point #	Tag #	Description	Instrument Type	Calibration Uncertainty
		Pressures		
112	TC12	IP steam temperature #2 at IP exhaust	Thermocouple	± 0.40°K
113	TC13	LP steam temperature #1 before mix	Thermocouple	± 0.40°K
114	TC14	LP steam temperature #2 before mix	Thermocouple	± 0.40°K
115	TC15	Steam temperature #1 before LP turbine	Thermocouple	± 0.40°K
116	TC16	Steam temperature #2 before LP turbine	Thermocouple	± 0.40°K
117	TC17	Condensate temperature #1	Thermocouple	± 0.40°K
118	TC18	Condensate temperature #2	Thermocouple	± 0.40°K
131	FT03	HP feedwater temperature to HRSG #1	Thermocouple	± 0.40°K
132	FT04	HP feedwater temperature to HRSG #2	Thermocouple	± 0.40°K
133	FT05	IP feedwater temperature to HRSG #1	Thermocouple	± 0.40°K
134	FT06	IP feedwater temperature to HRSG #2	Thermocouple	± 0.40°K
135	FT11	HRSG #1 LP steam temperature	Thermocouple	± 0.40°K
136	FT12	HRSG #2 LP steam temperature	Thermocouple	± 0.40°K
		Electrical Measurements		
150	. . .	Power	Calibrated Watt meter	± 0.1%
151	. . .	Potential transformer	Calibrated potential transformer	± 0.1%
152	. . .	Current transformer	Uncalibrated current transformer	± 0.3%
		Flow Elements		
171	FT01	Condensate mass flow rate to LP drum HRSG #1	Uncalibrated orifice	± 0.65%
172	FT02	Condensate mass flow rate to LP drum HRSG #2	Uncalibrated orifice	± 0.65%
173	FT03	HP feedwater to HRSG #1	Calibrated orifice	± 0.30%
174	FT04	HP feedwater to HRSG #2	Calibrated orifice	± 0.30%
175	FT05	IP feedwater to HRSG #1	Uncalibrated orifice	± 0.65%
176	FT06	IP feedwater to HRSG #2	Uncalibrated orifice	± 0.65%
177	FT07	Mainsteam spray to HRSG #1	Uncalibrated orifice	± 0.65%
178	FT08	Mainsteam spray to HRSG #2	Uncalibrated orifice	± 0.65%
179	FT09	Reheat spray to HRSG #1	Uncalibrated orifice	± 0.65%
180	FT10	Reheat spray to HRSG #2	Uncalibrated orifice	± 0.65%
181	FT11	LP steam from HRSG #1	Uncalibrated nozzle	± 1.00%
182	FT12	LP steam from HRSG #2	Uncalibrated nozzle	± 1.00%

Table B-2 Differential Pressure Uncertainty

Error Source	Sensitivity, %/%	Systematic, ± %	Random, ± %	Uncertainty Systematic, ± %	Uncertainty Random, ± %	Comments
Calibration at line pressure	1	0.1	. . .	0.1	0	. . .
Temperature drifts	1	0.14	0.06	0.14	0.06	± 5.6°C (± 10°F) from calibration, ± 2.2°C (± 4°F) during test
Static pressure	1	0.08	0.02	0.08	0.02	± 5% from calibration, ± 1% during test
Vibration	1	. . .	0.03	0	0.03	. . .
Repeatability	1	. . .	0.05	0	0.05	. . .
Hysteresis	0.5	. . .	0.02	0	0.01	Half the hysteresis is calibrated out
Water legs	1	0.07	. . .	0.07	0	Typical
Integration error	1	. . .	0.2	0	0.2	Typical
Data acquisition	1	0.03	0.01	0.03	0.01	Electronic
Engineering conversion	1	0.05	0.01	0.05	0.01	Regression polynomial
Total single	. . .	. . .	. . .	0.2104757	0.2184033	Root sum square (RSS) addition
Total systematic + random single	. . .	. . .	. . .	0.303315	. . .	RSS addition

--`,,```,,,,````-`-`,,`,,`,`,,`---

Copyright ASME International
Provided by IHS under license with ASME
No reproduction or networking permitted without license from IHS
Not for Resale

Table B-3 Water Flow (Lines A/B) Uncertainty Using Calibrated Section

Error Source	Sensitivity, %/%	Systematic, ± %	Random, ± %	Uncertainty Systematic, ± %	Uncertainty Random, ± %	Comments
Flow coefficient	1	0.3	. . .	0.3	0	Meeting PTC 19.5 flow measurement requirements
Differential pressure	0.5	0.21	0.22	0.105	0.11	Single measurement
Flow density	0.5	0.02	0.01	0.01	0.005	. . .
Thermal expansion	2.01	0.02	0.01	0.0402	0.0201	Applicable to orifice diameter
Total single	. . .	. . .	. . .	0.3205324	0.1119331	RSS addition
Total systematic + random single	. . .	. . .	. . .	0.3395144	. . .	RSS addition

Table B-4 Water Flow (Lines A/B) Uncertainty Using Uncalibrated Section

Error Source	Sensitivity, %/%	Systematic, ± %	Random, ± %	Uncertainty Systematic, ± %	Uncertainty Random, ± %	Comments
Flow coefficient	1	0.65	. . .	0.65	0	Uncalibrated. Meeting PTC 19.5 flow measurement requirements
Differential pressure	0.5	0.21	0.22	0.105	0.11	. . .
Flow density	0.5	0.02	0.01	0.01	0.005	. . .
Thermal expansion	2.01	0.02	0.01	0.0402	0.0201	Applicable to orifice diameter
Total single	. . .	. . .	. . .	0.659728	0.1119331	RSS addition
Total systematic + random single	. . .	. . .	. . .	0.6691562	. . .	RSS addition

Table B-5 Steam Flow (Lines A/B) Uncertainty Using Uncalibrated Section

Error Source	Sensitivity, %/%	Systematic, ± %	Random, ± %	Uncertainty Systematic, ± %	Uncertainty Random, ± %	Remarks, ± %
Flow coefficient	1	1	. . .	1	0	Uncalibrated. Meeting PTC 19.5 flow measurement requirements
Differential pressure	0.5	0.21	0.22	0.105	0.11	. . .
Flow density	0.5	0.03	0.02	0.015	0.01	. . .
Expansibility factor	1	0.6	0	0.6	0	. . .
Total single	. . .	. . .	. . .	1.171003843	0.11045361	RSS addition
Total systematic + random single	. . .	. . .	. . .	1.176201513	. . .	RSS addition

Table B-6 HP Total Water Flow Uncertainty

Error Source	Sensitivity, %/%	Systematic, ± %	Random, ± %	Uncertainty Systematic, ± %	Uncertainty Random, ± %	Comments
HP feedflow #1	0.498	0.3205	0.1119	0.159609	0.0557262	. . .
HP feedflow #2	0.498	0.3205	0.1119	0.159609	0.0557262	. . .
HP feedflow #1 systematic + random	. . .	. . .	. . .	0.1690575	. . .	RSS addition
HP feedflow #2 systematic + random	. . .	. . .	. . .	0.1690575	. . .	RSS addition
HP sprayflow #1	0.002	0.6597	0.1119	0.0013194	0.0002238	. . .
HP sprayflow #2	0.002	0.6597	0.1119	0.0013194	0.0002238	. . .
HP sprayflow #1 systematic + random	. . .	. . .	. . .	0.0013382	. . .	RSS addition
HP sprayflow #2 systematic + random	. . .	. . .	. . .	0.0013382	. . .	RSS addition
HP feedflow noncorrelated systematic + random uncertainty	. . .	. . .	. . .	0.2390909	. . .	RSS addition
HP feedflow correlated systematic uncertainty	. . .	. . .	. . .	0.2257212	. . .	RSS addition
HP feedflow correlated + noncorrelated uncertainty	. . .	. . .	. . .	0.3192235	0.0788094	RSS addition
HP feedflow systematic + random uncertainty	. . .	. . .	. . .	0.3288077	. . .	RSS addition

Copyright ASME International
Provided by IHS under license with ASME
No reproduction or networking permitted without license from IHS Not for Resale

Table B-7 IP Total Water Flow Uncertainty

Error Source	Sensitivity, %/%	Systematic, ± %	Random, ± %	Uncertainty Systematic, ± %	Uncertainty Random, ± %	Comments
IP feedflow #1	0.487	0.6597	0.1119	0.3212739	0.0544953	. . .
IP feedflow #2	0.487	0.6597	0.1119	0.3212739	0.0544953	. . .
IP feedflow #1 systematic + random	. . .	. . .	. . .	0.3258629	. . .	RSS addition
IP feedflow #2 systematic + random	. . .	. . .	. . .	0.3258629	. . .	RSS addition
IP sprayflow #1	0.013	0.6597	0.1119	0.0085761	0.0014547	. . .
IP sprayflow #2	0.013	0.6597	0.1119	0.0085761	0.0014547	. . .
IP sprayflow #1 systematic + random	. . .	. . .	. . .	0.0086986	. . .	RSS addition
IP sprayflow #2 systematic + random	. . .	. . .	. . .	0.0086986	. . .	RSS addition
IP feedflow uncertainty	. . .	. . .	. . .	0.4545118	0.0770954	RSS addition
IP feedflow systematic + random uncertainty	. . .	. . .	. . .	0.461004	. . .	RSS addition

Table B-8 LP Total Steam Flow Uncertainty

Error Source	Sensitivity, %/%	Systematic, ± %	Random, ± %	Uncertainty Systematic, ± %	Uncertainty Random, ± %	Comments
LP feed flow #1	0.5	1.171	0.11	0.5855	0.055	. . .
LP feed flow #2	0.5	1.171	0.11	0.5855	0.055	. . .
LP feed flow #1 systematic + random	. . .	. . .	. . .	0.5880776	. . .	RSS addition
LP feed flow #2 systematic + random	. . .	. . .	. . .	0.5880776	. . .	RSS addition
LP feed flow uncertainty	. . .	. . .	. . .	0.828022	0.0777817	RSS addition
LP feed flow systematic + random uncertainty	. . .	. . .	. . .	0.8316673	. . .	. . .

Table B-9 Pressure Uncertainty

Error Source	Sensitivity, %/%	Systematic, ± %	Random, ± %	Uncertainty Systematic, ± %	Uncertainty Random, ± %	Comments
Calibration	1	0.1	. . .	0.1	0	. . .
Temperature drifts	1	0.14	0.06	0.14	0.06	± 5.56°C (± 10°F) from calibration, ± 2.22°C (± 4°F) during test
Barometric pressure	0.4	0.01	. . .	0.004	0	Typical
Vibration	1	. . .	0.03	0	0.03	. . .
Repeatability	1	. . .	0.05	0	0.05	. . .
Hysteresis	0.5	. . .	0.02	0	0.01	Half the hysteresis is calibrated out
Water legs	1	0.02		0.02	0	Typical
Integration error	1	. . .	0.1	0	0.1	Typical
Data acquisition	1	0.03	0.01	0.03	0.01	Electronic
Engineering conversion	1	0.05	0.01	0.05	0.01	Regression polynomial
Total single pressure measurement	. . .	. . .	. . .	0.1828004	0.13152946	RSS addition
Total double pressure measurement	. . .	. . .	. . .	0.1828004	0.09300538	RSS addition
Total systematic + random single	. . .	. . .	. . .	0.2252021	. . .	RSS addition
Total systematic + random double	. . .	. . .	. . .	0.2051	. . .	RSS addition

Copyright ASME International
Provided by IHS under license with ASME
No reproduction or networking permitted without license from IHS Not for Resale

Table B-10 LP Exhaust Pressure Uncertainty

Range = (Maximum measured LP Exhaust Pressure—Minimum measured LP Exhaust Pressure) (kPa)	1.34
# of measurement locations	8
Substitute student *t* statistic for eight measurements at 95% confidence interval	0.288
Average pressure (kPa)	11.2
Uncertainty systematic (kPa)	0.38592
Uncertainty systematic (± %)	3.445714286
Uncertainty random (± %)	0.3

Table B-11 Steam Temperature Uncertainty

Error Source	Sensitivity, %/%	Systematic, ± %	Random, ± %	Uncertainty Systematic, ± %	Uncertainty Random, ± %	Comments
Calibration	1	0.09	. . .	0.09	0	. . .
Temperature drift	1	. . .	0.02	0	0.02	. . .
Integration error	1	. . .	0.01	0	0.01	Typical
Temperature stratification	1	0.04	0.02	0.04	0.02	Typical
Data acquisition	1	0.03	0.01	0.03	0.01	Electronic
Engineering conversion	1	0.02	0.01	0.02	0.01	Regression polynomial
Total single	. . .	. . .	. . .	0.10488088	0.033166248	RSS addition
Total double	. . .	. . .	. . .	0.10488088	0.023452079	RSS addition
Total systematic + random single	. . .	. . .	. . .	0.11	. . .	RSS addition
Total systematic + random double	. . .	. . .	. . .	0.10747093	. . .	RSS addition

Table B-12 HP Turbine Flow Capacity Uncertainty

Error Source	Sensitivity, %/%	Systematic, ± %	Random, ± %	Uncertainty Systematic, ± %	Uncertainty Random, ± %	Comments
Pressure	0.5	0.1828004	0.131529	0.0914002	0.06576473	. . .
Specific volume	0.5	0.2232468	0.145124	0.1116234	0.07256206	. . .
HP total mass flow	1	0.3192	0.0788	0.3192	0.0788	. . .
Total	. . .	. . .	. . .	0.3502891	0.12569682	RSS addition
Total systematic + random	. . .	. . .	. . .	0.3721587	. . .	RSS addition

Table B-13 Reheater Pressure Drop Uncertainty

Error Source	Sensitivity, %/%	Systematic, ± %	Random, ± %	Uncertainty Systematic, ± %	Uncertainty Random, ± %	Comments
Cold reheat pressure	9.18	0.1828004	0.131529	1.6781077	1.20744044	. . .
Hot reheat pressure	9.29	0.1828004	0.131529	1.6982157	1.22190868	. . .
Total	. . .	. . .	. . .	2.3874635	1.71783971	RSS addition
Total systematic + random	. . .	. . .	. . .	2.9412506	. . .	RSS addition

Table B-14 LP Admission Steam Enthalpy Uncertainty

Error Source	Sensitivity, %/%	Systematic, ± %	Random, ± %	Uncertainty Systematic, ± %	Uncertainty Random, ± %	Comments
Pressure	0.0028	0.1828004	0.131529	0.0005118	0.00036828	. . .
Temperature	0.2208	0.10488088	0.023452	0.0231577	0.00517822	. . .
Total	. . .	. . .	. . .	0.0231634	0.0051913	RSS addition
Total systematic + random	. . .	. . .	. . .	0.023738	. . .	RSS addition

Copyright ASME International
Provided by IHS under license with ASME
No reproduction or networking permitted without license from IHS
Not for Resale

Table B-15 Power Uncertainty

Error Source	Sensitivity, %/%	Systematic, ± %	Random, ± %	Uncertainty Systematic, ± %	Uncertainty Random, ± %	Comments
Potential transformers	1	0.1	0	0.1	0	Calibrated
Current transformers	1	0.3	0	0.3	0	Accuracy class
Wattmeter	1	0.1	0.03	0.1	0.03	Calibrated
Data acquisition	1	0.03	0.01	0.03	0.01	Electronic
Power factor	0.013	0.3	0.08	0.0039	0.00104	. . .
Total	. . .	. . .	. . .	0.3330394	0.03163987	RSS addition
Total systematic + random	. . .	. . .	. . .	0.3345389	. . .	RSS addition

Table B-16 Sensitivity Table

Parameter	Sensitivity, %/%
HP flow	0.9549
HP temperature	0.2614
HP turbine flow capacity	0.1176
Exhaust pressure	0.0562
IP admission and reheat spray flow	0.0622
HRH temperature	0.4876
Reheater pressure drop	0.0169
LP admission flow	0.0193
LP admission enthalpy	0.0407
Electrical power	1

Table B-17 Uncertainty for Steam Turbine Performance Test

Error Source	Sensitivity, %/%	Systematic, ± %	Random, ± %	Uncertainty Systematic, ± %	Uncertainty Random, ± %	Comments
HP flow	0.9549	0.3192	0.0788	0.30480408	0.07524612	
HP temperature	0.2614	0.10488088	0.023452079	0.027415862	0.006130373	
HP turbine flow capacity	0.1176	0.3502891	0.12569682	0.041193998	0.014781946	
Exhaust pressure	0.0562	3.445714286	0.3	0.193649143	0.01686	
IP admission and reheat spray flow	0.0622	0.4545	0.0771	0.0282699	0.00479562	
HRH temperature	0.4876	0.10488088	0.023452079	0.051139917	0.011435234	
Reheater pressure drop	0.0169	2.3874635	1.71783971	0.040348133	0.029031491	
LP admission flow	0.0193	0.828022	0.0777817	0.015980825	0.001501187	
LP admission enthalpy	0.0407	0.0231634	0.0051913	0.00094275	0.000211286	
Electrical power	1	0.3330394	0.03163987	0.3330394	0.03163987	
Subtotal of above	. . .	. . .	. . .	0.507218252	. . .	RSS addition
Correction curves	1	0.1	. . .	0	0.1	Based on correction curve error analysis
Subtotal of above	. . .	. . .	. . .	0.516981968	. . .	RSS addition
Cycle isolation	1	0	. . .	0	. . .	Perfect cycle isolation
Final total	. . .	. . .	. . .	0.516981968	. . .	Linear addition

Copyright ASME International
Provided by IHS under license with ASME
No reproduction or networking permitted without license from IHS Not for Resale

NONMANDATORY APPENDIX C
SAMPLE FLOW CALCULATIONS FOR DIFFERENTIAL PRESSURE METERS

Sample flow calculations are presented in this Appendix for the convenience of the Code User to represent the correct calculation procedures. The calculations are based on the information in ASME PTC 19.5. This Appendix is not meant to substitute for PTC 19.5, which the Code User is expected to be familiar with.

The calibration data and geometries in these sample calculations are for specific metering runs. The data and dimensions of other metering runs will be different, but the methodology for flow calculation, and, if necessary, extrapolating the data, is identical for other differential pressure metering runs.

C-1 SAMPLE CALCULATION 1

The calibrated orifice-metering run of Mandatory Appendix II is used for water flow measurement. For the purpose of the sample calculation, the flow will be calculated based on measurement of the differential pressure at Tap Set "A" only. With a measured differential pressure of 35.00 kPa_d (5.076 psid) at Tap Set "A," and measured temperature and pressure of 143.3°C (289.9°F) and 24 235 kPa_{abs} (3,515.0 psia), respectively, the flow rate is calculated in Table C-1.

Determination of actual orifice geometry due to thermal expansion:

$$d_{\text{actual}} = d_{\text{meas}} + \alpha_{PE} d_{\text{meas}}(T - T_{\text{meas}}) \quad \text{(C-1)}$$
$$= 121.56 + (16.99\text{E}{-6})(121.56)(143.3 - 20) = 121.81$$

$$D_{\text{actual}} = D_{\text{meas}} + \alpha_{P} D_{\text{meas}}(T - T_{\text{meas}}) \quad \text{(C-2)}$$
$$= 201.80 + (11.81\text{E}{-6})(201.80)(143.3 - 20) = 202.09$$

$$\beta_{\text{actual}} = \frac{d_{\text{actual}}}{D_{\text{actual}}} \quad \text{(C-3)}$$
$$= 121.81/202.09 = 0.60275$$

Table C-1 Sample Calculation 1 Summary of Data and Properties for Flow Calculation

Data	SI Units	U.S. Customary Units
Bore diameter measured at factory	121.56 mm	4.7858 in.
Pipe diameter measured at factory	201.80 mm	7.9460 in.
Pressure measurement location	Upstream tap	. . .
Fluid pressure	24 235 kPa_{abs}	3,515.0 psia
Fluid temperature	143.3°C	289.9°F
Differential pressure	35.00 kPa_d	5.076 psid
Fluid Properties		
Density	934.58 kg/m^3	58.344 lbm/ft^3
Viscosity	0.000195 kg/(m-s)	0.4727 lbm/(ft-hr)
Thermal Expansion Properties		
Carbon steel at fluid temperature	11.81E–6 mm/mm/°C	6.56E-6 in./in./°F
316 SS at fluid temperature	16.99E–6 mm/mm/°C	9.44E-6 in./in./°F

GENERAL NOTE: Flanged-type orifice metering: 316 SS orifice plate—carbon steel pipe

Copyright ASME International
Provided by IHS under license with ASME
No reproduction or networking permitted without license from IHS
Not for Resale

The calculation is iterative because the discharge coefficient is dependent on Reynolds number, which itself is dependent on flow. For the first iteration, a value of 0.6000 is assumed for the discharge coefficient of orifice metering runs.

(a) Iteration 1

$$q_m = n\ \frac{\pi}{4}\ d^2 C\varepsilon \sqrt{\frac{2\rho(\Delta P)g_c}{1-\beta^4}} \tag{C-4}$$

Using the appropriate units per Table 4-4.1.4:

$$q_m = (1.0)\ \frac{\pi}{4}\ (121.81\text{E}{-3})^2(0.6000)(1.000)\sqrt{\frac{2(934.58)(35.00\text{E}3)(1.000)}{1-(0.60275)^4}}$$

$$= 60.692 \text{ kg/s } (481{,}691 \text{ lbm/hr})$$

The pipe Reynolds number at this flow is:

$$\mathrm{R}_D = 4q_m/\pi D\mu \tag{C-5}$$
$$=(4)(60.692)/(\pi)(202.09\text{E}{-3})(0.000195) = 1{,}960{,}930$$

The discharge coefficient at this Reynolds number, from the calibration curve fit is calculated

$$C = \overline{C}_0 + 0.2232\ \frac{\sqrt{1-\beta^4}}{\sqrt{1-\dfrac{\beta^4}{(1-30.78\ \mathrm{Re}^{-0.5})^2}}} - 0.2232 \tag{C-6}$$

with $\overline{C}_0 = 0.6056$ from the calibration data

$$C = 0.6056 + 0.2232\ \frac{\sqrt{1-0.60275^4}}{\sqrt{1-\dfrac{0.60275^4}{[1-30.78(1{,}960{,}930^{-0.5})]^2}}} - 0.2232$$

$$= 0.60638$$

The difference between the assumption and calculated discharge coefficient for this mass flow is

$$(0.60000 - 0.60638)/(0.6000) \times 100 = 1.06\%$$

This is unacceptable, and a second iteration is required. The second iteration will assume the current calculated discharge coefficient.

(b) Iteration 2

For a discharge coefficient of 0.60638

$$q_m = 0.60638/0.6000 \times 60.692 = 61.337 \text{ kg/s } (486{,}810 \text{ lbm/hr})$$

The Reynolds number at this flow is

$$61.337/60.692 \times 1{,}960{,}930 = 1{,}981{,}770$$

At a Reynolds number of 1,981,770, the discharge coefficient is

$$C = 0.6056 + 0.2232\ \frac{\sqrt{1-0.60275^4}}{\sqrt{1-\dfrac{0.60275^4}{(1-30.78(1{,}981{,}770^{-0.5})^2}}} - 0.2232$$

$$= 0.60637$$

The difference between the assumed discharge coefficient in this iteration and the calculated discharge coefficient is:

$$(0.60638 - 0.60637)/(0.60638) \times 100 = 0.002\%$$

This is acceptable, and the calculated flow rate is thus

$$q_m = 0.60637/0.60638 \times 61.337 = 61.336 \text{ kg/s } (486{,}802 \text{ lbm/hr})$$

Copyright ASME International
Provided by IHS under license with ASME
No reproduction or networking permitted without license from IHS
Not for Resale

Table C-2 Sample Calculation 2 Summary of Data and Properties for Flow Calculation

Data	SI Units	U.S. Customary Units
Bore diameter measured at factory	120.00 mm	4.7244 in.
Pipe diameter measured at factory	200.00 mm	7.87402 in.
Pressure measurement location	Upstream tap	
Fluid pressure	13 000 kPa_{abs}	1,885.5 psia
Fluid temperature	250.0°C	482.0°F
Differential pressure	50.00 kPa_d	7.252 psid
Fluid Properties		
Density	809.43 kg/m^3	50.531 lbm/ft^3
Viscosity	0.000109 kg/(m-s)	0.2643 lbm/(ft-hr)
Thermal Expansion Properties		
Carbon steel at fluid temperature	12.58E-6 mm/mm/°C	6.98E-6 in./in./°F
316 SS at fluid temperature	17.42E-6 mm/mm/°C	9.68E-6 in./in./°F

GENERAL NOTE: Flanged-type orifice metering: 316 SS orifice plate — carbon steel pipe

C-2 SAMPLE CALCULATION 2

An uncalibrated orifice-metering run is used for water flow measurement. For the purpose of the sample calculation, the flow will be calculated based on differential pressure measurement at only one set of pressure taps. The data is summarized in Table C-2.

Determination of actual orifice geometry due to thermal expansion

$$d_{\text{actual}} = d_{\text{meas}} + \alpha_{PE} d_{\text{meas}}(T - T_{\text{meas}}) \tag{C-7}$$
$$= 120.00 + (17.42\text{E}{-6})(120.00)(250.0 - 20) = 120.48$$
$$D_{\text{actual}} = D_{\text{meas}} + \alpha_{P} D_{\text{meas}}(T - T_{\text{meas}}) \tag{C-8}$$
$$= 200.00 + (12.58\text{E}{-6})(200.00)(250.0 - 20) = 200.57$$
$$\beta_{\text{actual}} = \frac{d_{\text{actual}}}{D_{\text{actual}}} \tag{C-9}$$
$$= 120.48/200.57 = 0.60069$$

The calculation is iterative because the discharge coefficient is dependent on Reynolds number, which itself is dependent on flow. For the first iteration, a value of 0.6000 is assumed for the discharge coefficient of orifice metering runs.

(a) Iteration 1

$$q_m = n\ \frac{\pi}{4}\ d^2 C \varepsilon \sqrt{\frac{2\rho(\Delta P) g_c}{1 - \beta^4}} \tag{C-10}$$

Using the appropriate units per Table 4-4.1.4

$$q_m = (1.0)\ \frac{\pi}{4}\ (120.48\text{E}{-3})^2(0.6000)(1.000)\ \sqrt{\frac{2(809.43)(50.00\text{E}3)(1.000)}{1 - (0.60069)^4}}$$

$$= 65.986 \text{ kg/s } (523{,}707 \text{ lbm/hr})$$

The pipe Reynolds number at this flow is

$$R_D = 4q_m/\pi D\mu \tag{C-11}$$
$$= (4)(65.986)/(\pi)(200.57\text{E}{-3})(0.000109) = 3{,}842{,}992$$

The discharge coefficient at this Reynolds number is calculated from the empirical formulation published in ASME PTC 19.5 of discharge coefficient as a function of pipe Reynolds number.

From ASME PTC 19.5, for SI units of measure, with D in millimeters

$$C = 0.5959 + 0.0312\beta^{2.1} - 0.1840\beta^8 + \frac{2.2860\beta^4}{D(1 - \beta^4)} - \frac{0.8560\beta^3}{D} + \frac{91.71\beta^{2.5}}{R_D^{0.75}}$$

Copyright ASME International
Provided by IHS under license with ASME
No reproduction or networking permitted without license from IHS
Not for Resale

From ASME PTC 19.5, for US units of measure, with D in inches:

$$C = 0.5959 + 0.0312\beta^{2.1} - 0.1840\beta^{8} + \frac{0.0900\beta^{4}}{D(1-\beta^{4})} - \frac{0.0337\beta^{3}}{D} + \frac{91.71\beta^{2.5}}{R_D^{0.75}}$$

The discharge coefficient at the Reynolds number as calculated from the first iteration is thus:

$$C = 0.5959 + 0.0312(0.60069)^{2.1} - 0.1840(0.60069)^{8} + \frac{2.2860(0.60069)^{4}}{(200.57)[1-(0.60069)^{4}]} - \frac{0.8560(0.60069)^{3}}{200.57} + \frac{91.71(0.60069)^{2.5}}{3{,}842{,}992^{0.75}}$$

$$= 0.60456$$

The difference between the assumption and calculated discharge coefficient for this mass flow is

$$(0.60000 - 0.60456)/(0.6000) \times 100 = 0.76\%$$

This is unacceptable, and a second iteration is required. The second iteration will assume the current calculated discharge coefficient.

(b) Iteration 2. For a discharge coefficient of 0.60456

$$q_m = 0.60456/0.6000 \times 65.986 = 66.487 \text{ kg/s } (527{,}683 \text{ lbm/hr})$$

The Reynolds number at this flow is

$$66.487/65.986 \times 3{,}842{,}992 = 3{,}872{,}170$$

At a Reynolds number of 3,872,170, the discharge coefficient is:

$$C = 0.5959 + 0.0312(0.60069)^{2.1} - 0.1840(0.60069)^{8} + \frac{2.2860(0.60069)^{4}}{(200.57)[1-(0.60069)^{4}]} - \frac{0.8560(0.60069)^{3}}{200.57} + \frac{91.71(0.60069)^{2.5}}{3{,}872{,}170^{0.75}}$$

$$= 0.60455$$

The difference between the assumed discharge coefficient in this iteration and the calculated discharge coefficient is:

$$(0.60456 - 0.60455)/(0.60455) \times 100 = 0.002\%$$

This is acceptable, and the calculated flow rate is thus

$$q_m = 0.60455/0.60456 \times 66.487 = 66.485 \text{ kg/s } (527{,}668 \text{ lbm/hr})$$

C-3 SAMPLE CALCULATION 3

An uncalibrated nozzle metering run is used for steam flow measurement. For the purpose of the sample calculation, the flow will be calculated based on differential pressure measurement at only one set of pressure taps. The data is summarized in Table C-3.

Determination of actual orifice geometry due to thermal expansion:

$$d_{\text{actual}} = d_{\text{meas}} + \alpha_{PE} d_{\text{meas}}(T - T_{\text{meas}}) \quad \text{(C-12)}$$
$$= 134.08 + (17.55\text{E-}6)(134.08)(284.3 - 20) = 134.70$$
$$D_{\text{actual}} = D_{\text{meas}} + \alpha_{P} D_{\text{meas}}(T - T_{\text{meas}}) \quad \text{(C-13)}$$
$$= 300.20 + (12.80\text{E-}6)(300.20)(284.3 - 20) = 301.22$$
$$\beta_{\text{actual}} = \frac{d_{\text{actual}}}{D_{\text{actual}}} \quad \text{(C-14)}$$
$$= 134.70/301.22 = 0.4472$$

For a compressible flow, the compressibility factor, ε, must be calculated. For nozzle metering runs, it is calculated by

$$\varepsilon_1 = \left[r^{\frac{2}{\kappa}} \left(\frac{\kappa}{\kappa - 1} \right) \left(\frac{1 - r^{\frac{\kappa-1}{\kappa}}}{1 - r} \right) \left(\frac{1 - \beta^4}{1 - \beta^4 r^{\frac{2}{\kappa}}} \right) \right]^{0.5}$$

For this metering run, the pressure ratio, r, is 3556.9/3589.4 = 0.99095, and

$$\varepsilon_1 = \left[(0.99095)^{1.538} (4.333) \left(\frac{1 - (0.99095)^{0.2308}}{1 - 0.99095} \right) \left(\frac{1 - (0.4472)^4}{1 - (0.4472)^4 (0.99095)^{1.538}} \right) \right]^{0.5}$$

$$= 0.99455$$

Copyright ASME International
Provided by IHS under license with ASME
No reproduction or networking permitted without license from IHS Not for Resale

Table C-3 Sample Calculation 3 Summary of Data and Properties for Flow Calculation

Data	SI Units	U.S. Customary Units
Bore diameter measured at factory	134.08 mm	5.2787 in.
Pipe diameter measured at factory	300.20 mm	11.819 in.
Pressure measurement location	Upstream tap	
Fluid pressure	3 589.4 kPa_{abs}	520.6 psia
Fluid temperature	284.3°C	543.8°F
Differential pressure	32.46 kPa_d	4.708 psid
Fluid Properties		
Density	15.696 kg/m^3	0.97978 lbm/ft^3
Viscosity	0.000019263 kg/(m-s)	0.0466 lbm/(ft-hr)
Isentropic exponent	1.3	1.3
Thermal Expansion Properties		
Carbon steel at fluid temperature	12.80E-6 mm/mm/°C	7.110E-6 in./in./°F
316 SS at fluid temperature	17.55E-6 mm/mm/°C	9.752E-6 in./in./°F

GENERAL NOTE: Low beta ratio flow nozzle metering run, pipe wall taps: 316 SS nozzle—carbon steel pipe.

The calculation is iterative because the discharge coefficient is dependent on Reynolds number, which itself is dependent on flow. For the first iteration, a value of 1.000 is assumed for the discharge coefficient of nozzle metering runs.

(a) Iteration 1

$$q_m = n\ \frac{\pi}{4}\ d^2 C \varepsilon \sqrt{\frac{2\rho(\Delta P)g_c}{1-\beta^4}} \tag{C-15}$$

Using the appropriate units per Table 4-4.1.4:

$$q_m = (1.0)\ \frac{\pi}{4}\ (134.70\text{E}{-3})^2(1.000)(0.99455)\sqrt{\frac{2(15.696)(32.46\text{E}3)(1.000)}{1-(0.4472)^4}}$$

$$= 14.602 \text{ kg/s } (115{,}891 \text{ lbm/hr})$$

The pipe Reynolds number at this flow is:

$$\begin{aligned} R_D &= 4q_m/\pi D\mu \\ &= (4)(14.602)/(\pi)(301.22\text{E}{-3})(0.000019263) = 3{,}204{,}164 \\ R_d &= R_D/\beta = 3{,}204{,}164/0.4472 = 7{,}164{,}946 \end{aligned} \tag{C-16}$$

The discharge coefficient at this Reynolds number is calculated from the empirical formulation published in ASME PTC 19.5 of discharge coefficient as a function of pipe Reynolds number.

$$C = 1.0054 - \frac{0.185}{R_d^{0.2}}\left[1 - \frac{361{,}239}{R_d}\right]^{0.8}$$

$$C = 1.0054 - \frac{0.185}{7{,}164{,}946^{0.2}}\left[1 - \frac{361{,}239}{7{,}164{,}946}\right]^{0.8}$$

$$= 0.99785$$

The difference between the assumption and calculated discharge coefficient for this mass flow is

$$(1.000 - 0.99785)/(1.000) \times 100 = 0.2\%$$

This is marginal, and a second iteration is required. The second iteration will assume the current calculated discharge coefficient.

(b) Iteration 2. For a discharge coefficient of 0.99785

Copyright ASME International
Provided by IHS under license with ASME
No reproduction or networking permitted without license from IHS Not for Resale

$$q_m = 0.99785/1.0000 \times 14.602 = 14.571 \text{ kg/sec (115,645 lbm/hr)}$$

The bore Reynolds number at this flow is

$$(14.571/14.602) \times 7{,}164{,}946 = 7{,}149{,}735$$

At a Reynolds number of 7,149,735, the discharge coefficient is

$$C = 1.0054 - \frac{0.185}{7{,}149{,}735^{0.2}} \left[1 - \frac{361{,}239}{7{,}149{,}735}\right]^{0.8} = 0.99784$$

The difference between the assumed discharge coefficient in this iteration and the calculated discharge coefficient is trivial, and the calculated flow is thus:

$$q_m = 0.99784/0.99785 \times 14.571 = 14.571 \text{ kg/s (115,644 lbm/hr)}$$

--`,,```,,,,````-`-`,,`,,`,`,,`---

Copyright ASME International
Provided by IHS under license with ASME
No reproduction or networking permitted without license from IHS Not for Resale

NONMANDATORY APPENDIX D
PROCEDURES FOR DETERMINING HP TO IP LEAKAGE FLOW

D-1 DESCRIPTION OF HP TO IP LEAKAGE FLOW

In many combined cycle plants the steam turbine has the High Pressure (HP) and Intermediate Pressure (IP) sections combined. This arrangement is commonly referred to as an "opposed-flow" design. Initial steam enters near the center of the casing and flows through the HP stages, then exhausts to the reheat section of the HRSG. Following reheat, steam re-enters the casing, also near the center, and flows in the opposite direction. In this combined casing there is a flow path, of steam leakage, between sections within the turbine casing. This leakage steam is often referred to as HP to IP leakage flow. A typical turbine diagram, with this opposed flow design, is shown in Fig. D-1. The internal packing, labeled N2 on the diagram, is designed to limit the leakage of steam from the HP to the IP section.

The HP to IP packing leakage is the steam that leaks from the first stage of the HP turbine to the IP turbine bowl along the HP to IP shaft packing or other casing passages. Steam turbines of this configuration are designed to pass a given amount of steam flow to "cool" the first reheat stage during operation. In order to determine the actual HP turbine exhaust flow and the true IP turbine efficiency, the HP to IP packing leakage must be determined. Depending on the packing clearances and stage pressures, this flow may be somewhat greater than or less than the actual design flow. If this leakage flow is not properly accounted for, misleading results of HP Exhaust Flow (CRH Flow) and of IP efficiency will be obtained. Determination of the HP to IP flow leakage reduces the test uncertainty associated with the steam turbine's performance. Since this leakage flow is inside the turbine, it is impractical to directly measure it and therefore indirect methods are used to determine its magnitude.

The following is a list and a more detailed description of some of the most commonly used methods to determine the amount of internal HP to IP leakage flow on steam turbines:

(a) temperature inference method (subsection D-2)
(b) plot IP turbine efficiency over load range (subsection D-3)
(c) ratio of IP efficiency slopes (subsection D-4)
(d) blowdown method (subsection D-6)

D-2 TEMPERATURE INFERENCE METHOD

The basis of the temperature inference method is that IP section efficiency remains constant over the operating range. The methodology is based upon the cooling effect that the internal HP to IP packing leakage has on the apparent IP section efficiency. The rate of flow is determined indirectly by changing the initial and reheat temperatures. Calculations and engineering judgments are then made to establish the leakage flow that will best fit the test data.

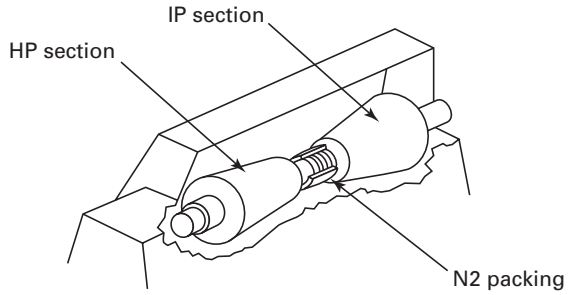

Fig. D-1 Typical Turbine Diagram With Opposed Flow Design

Copyright ASME International
Provided by IHS under license with ASME
No reproduction or networking permitted without license from IHS
Not for Resale

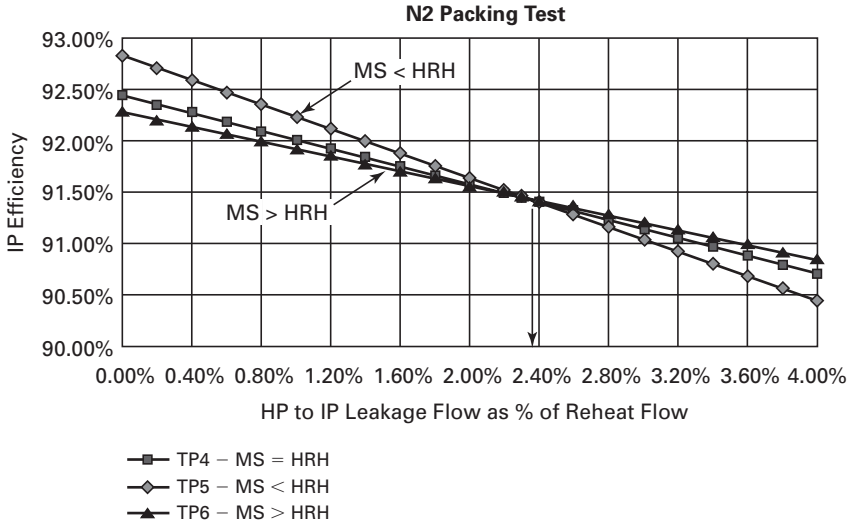

Fig. D-2 HP to IP Leakage Flow as % of IP Bowl Flow Versus IP Efficiency

The expansion efficiency of an IP turbine section can be readily obtained by measuring the pressure and temperature at both the inlet and the exhaust, provided the expansion process is entirely within the superheated steam region. This is normally true for HP and IP sections of combined cycle units. On opposed flow units, where the IP efficiency is calculated from the hot reheat to the crossover, the internal leakage must be properly taken into account. This leakage, from the HP to the IP section, is generally cooler than the steam in the IP bowl, thereby yielding a reduced enthalpy condition at the IP exhaust (or crossover) and a corresponding change in the "apparent" enthalpy drop efficiency. Deriving the IP efficiency, that more closely reflects the true value, requires a good estimate of the leakage flow and its corresponding enthalpy.

As noted earlier, steam leaking from the HP to the IP cools the steam in the IP yielding an erroneously high value of measured IP efficiency, if not properly compensated. The amount of this error will vary approximately as the difference in enthalpy between the leakage steam and the hot reheat steam. It follows that as initial temperature is raised and/or reheat temperature is decreased, this error will decrease and conversely will increase if initial temperature is lowered and/or reheat temperature is increased. It is possible to take advantage of this phenomenon to derive the HP to IP leakage flow.

At least three tests should be run with variations in initial and reheat temperatures. For each of the three tests, the measured IP efficiency for various assumed values of HP to IP leakage may be calculated. For each test, a curve of IP efficiency versus assumed leakage flow, as a percent of reheat flow, should be plotted. The lines for each of the test runs should intersect at a point that indicates the actual HP to IP leakage and the actual IP efficiency. However, there is a high probability that a number of widely spaced intersections, rather than a single point of intersection, may result. Sound engineering judgment should be used to select a reasonable midpoint, representing the best estimate of actual flow and actual IP efficiency. Priority should be placed on the intersection formed by the lines with the steepest slope. A hypothetical set of plots is presented in Fig. D-2, and indicates a value of leakage in the range of 2.2% to 2.4%, where the most likely value is 2.3%.

The slope of the curves is a function of the difference in temperature between initial and reheat steam temperatures. The most accurate results will be obtained if there is maximum difference in slope between curves. If the lines are nearly parallel, a small change in one line can have a large effect on the intersection. It follows that, for highest accuracy, one or more tests should be conducted at maximum initial and minimum reheat temperature and at least one test with minimum initial and maximum reheat temperature. Care must be taken; however, to stay within the safe operating conditions of the turbine-generator as defined by the OEM. Note also, that by varying temperature at this location (mid span packing) there are differences in thermal expansion (between tests) that affect internal packing clearances. Therefore, the parameter that is being tested for may actually be changing during testing.

D-2.1 Calculation Methodology for Temperature Inference Method

The following steps describe the manner in which the as-tested HP to IP leakage is determined by the temperature inference method.

Copyright ASME International
Provided by IHS under license with ASME
No reproduction or networking permitted without license from IHS
Not for Resale

Table D-2.1-1 Summary of Example Test Data

Test Data	Packing Leakage Test Data: Test Point		
	MS = HRH PKG TP #4	MS < HRH PKG TP #5	MS > HRH PKG TP #6
Throttle pressure, kg/cm^2 (lbm/in.^{2})	167.5 (2,382.4)	169.4 (2,409.7)	166.1 (2,363.1)
Throttle temperature, °C (°F)	538.3 (1,000.9)	507.2 (945.0)	536.3 (997.4)
First stage pressure, kg/cm^2 (lbm/in.^{2})	123.5 (1,756.5)	125.0 (1,777.7)	122.7 (1,745.2)
Hot reheat pressure, kg/cm^2 (lbm/in.^{2})	36.6 (520.7)	37.1 (527.7)	37.0 (526.3)
Hot reheat temperature, °C (°F)	533.1 (991.5)	524.1 (975.3)	515.4 (959.8)
Crossover pressure, kg/cm^2 (lbm/in.^{2})	12.1 (171.8)	12.2 (173.6)	12.2 (172.9)
Crossover temperature, °C (°F)	368.2 (694.8)	359.6 (679.2)	353.1 (667.5)

Table D-2.1-2 Calculated Enthalpies

Intermediate Calculations	MS = HRH PKG TP #4	MS < HRH PKG TP #5	MS > HRH PKG TP #6
Throttle enthalpy, kJ/kg (Btu/lbm)	628.6 (1,462.1)	611.8 (1,423.1)	627.8 (1,460.4)
Hot reheat enthalpy, kJ/kg (Btu/lbm)	651.3 (1,515.1)	647.5 (1,506.2)	643.9 (1,497.9)
IP exhaust enthalpy, kJ/kg (Btu/lbm)	590.3 (1,373.1)	586.9 (1,365.1)	584.3 (1,359.1)

Table D-2.1-3 First Stage Enthalpy Drop

	MS = HRH PKG TP #4	MS < HRH PKG TP #5	MS > HRH PKG TP #6
Throttle enthalpy, kJ/kg (Btu/lbm)	628.6 (1,462.1)	611.8 (1,423.1)	627.8 (1,460.4)
Delta HP to IP from HBAL, kJ/kg (Btu/lbm)	−13.3 (30.9)	−13.3 (30.9)	−13.2 (30.8)
HP to IP enthalpy, kJ/kg (Btu/lbm)	615.3 (1,430.2)	598.5 (1,392.2)	614.6 (1,429.6)

Step 1: Calculate the MS, HRH, and IP exhaust enthalpies for each test point.
Step 2: Estimate HP to IP enthalpy by either heat balance or from the steam expansion line for each test point.
Step 3: Set up a calculation table for an assumed HP to IP leakage flow, as a percent of reheat bowl flow. For each assumed HP to IP leakage flow, determine IP bowl enthalpy and IP efficiency.
Step 4: Plot the data (IP efficiency versus packing flow as % of reheat flow) from Step 3, to determine the intersection point(s) that yield the corresponding tested HP to IP leakage flow.

EXAMPLE Given the test data on Table D-2.1-1 determine the following:
(a) HP to IP leakage enthalpy.
(b) Set up a table in 0.2% increments, of HP to IP leakage flow, and calculate the assumed IP efficiency for each of the test points.
(c) Graph the data obtained in step (b) to determine the HP to IP leakage flow.
Solve as shown in Steps 1 through 4:

Step 1: Based on the above data the following enthalpies were calculated, see Table D-2.1-2.
Step 2: By reviewing the design heat balance data, the following enthalpy drops were determined for the first stage, see Table D-2.1-3.
Step 3: At an assumed HP to IP packing leakage of 0.0% obtain the following:
(1) IP bowl enthalpy = HRH enthalpy − [assumed % HP to IP leakage flow × (HRH enthalpy − HP to IP packing enthalpy)]
(2) For MS = HRH, IP bowl enthalpy = 651.3 − [0.0% × (651.3 – 615.3)] = 651.3
(3) IP efficiency = [(IP bowl enthalpy − IP exhaust enthalpy) / (IP bowl enthalpy − IP exhaust enthalpy at isentropic expansion)
(4) For MS = HRH case, IP efficiency = [(651.3 – 590.3) / (651.3 − 585.3) = 92.4%

This same approach is used for the other test points at assumed values of HP to IP packing flow, ranging from 0% leakage flow to some percentage amount required to attain the estimate of the true value. The calculations are shown in Table D-2.1-4.

Step 4: See Fig. D-2 for graph of above table.

Copyright ASME International
Provided by IHS under license with ASME
No reproduction or networking permitted without license from IHS
Not for Resale

Table D-2.1-4 Calculation Table

	MS = HRH PKG TP #4			MS < HRH PKG TP #5			MS > HRH PKG TP #6		
Assumed Leakage	IP Bowl Enthalpy, kJ/kg	Enthalpy, Btu/lbm	IP Eff.	IP Bowl Enthalpy, kJ/kg	Enthalpy Btu/lbm	IP Eff.	IP Bowl Enthalpy, kJ/kg	Enthalpy Btu/lbm	IP Eff.
For a pkg leakage of 0.00%	651.4	1 515.1	0.9245	647.6	1 506.2	0.9284	644.0	1 497.9	0.9228
For a pkg leakage of 0.20%	651.3	1 515.0	0.9236	647.4	1 505.9	0.9272	643.9	1 497.7	0.9221
For a pkg leakage of 0.40%	651.3	1 514.8	0.9227	647.3	1 505.7	0.9260	643.9	1 497.6	0.9214
For a pkg leakage of 0.60%	651.2	1 514.6	0.9219	647.3	1 505.5	0.9248	643.8	1 497.4	0.9207
For a pkg leakage of 0.80%	651.1	1 514.5	0.9210	647.2	1 505.3	0.9236	643.7	1 497.3	0.9200
For a pkg leakage of 1.00%	651.0	1 514.3	0.9201	647.0	1 505.0	0.9224	643.7	1 497.2	0.9192
For a pkg leakage of 1.20%	651.0	1 514.1	0.9193	647.0	1 504.8	0.9212	643.6	1 497.0	0.9185
For a pkg leakage of 1.40%	650.9	1 513.9	0.9184	646.9	1 504.6	0.9200	643.6	1 496.9	0.9178
For a pkg leakage of 1.60%	650.8	1 513.8	0.9175	646.7	1 504.3	0.9188	643.5	1 496.8	0.9171
For a pkg leakage of 1.80%	650.7	1 513.6	0.9166	646.7	1 504.1	0.9176	643.4	1 496.6	0.9163
For a pkg leakage of 2.00%	650.7	1 513.4	0.9158	646.6	1 503.9	0.9164	643.4	1 496.5	0.9156
For a pkg leakage of 2.20%	650.6	1 513.3	0.9149	646.5	1 503.7	0.9152	643.3	1 496.4	0.9149
For a pkg leakage of 2.40%	650.5	1 513.1	0.9140	646.4	1 503.4	0.9140	643.3	1 496.2	0.9142
For a pkg leakage of 2.60%	650.4	1 512.9	0.9131	646.3	1 503.2	0.9128	643.2	1 496.1	0.9134
For a pkg leakage of 2.80%	650.4	1 512.8	0.9122	646.2	1 503.0	0.9116	643.1	1 495.9	0.9127

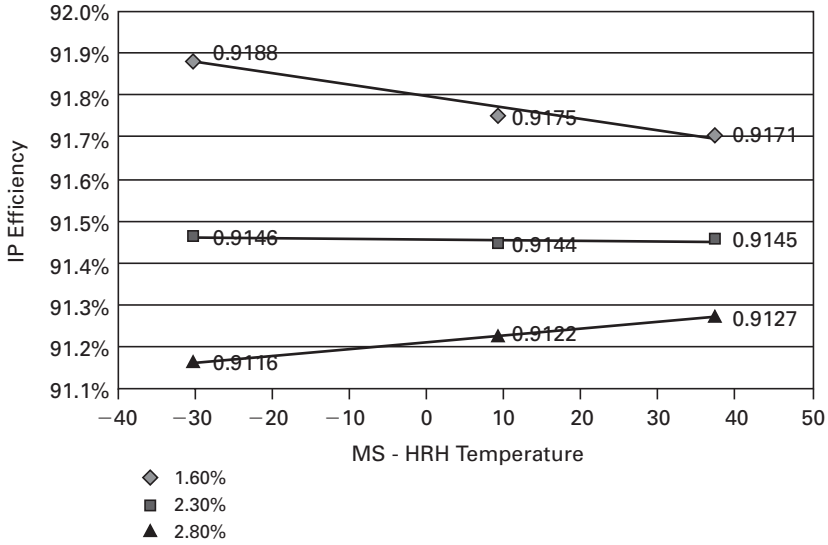

Fig. D-3 IP Efficiency Versus Assumed Values of HP to IP Leakage Flow

D-3 PLOT IP TURBINE EFFICIENCY OVER LOAD RANGE

Another approach to determine HP to IP leakage flow, using data from the inference method, is graphed in Fig. D-3. In this graph, IP efficiency is plotted for assumed values of HP to IP leakage flow for each test as a function of the difference between the main steam and hot reheat temperatures. As seen from the graph, at an assumed leakage flow of 1.6% of reheat flow, the IP section efficiency decreases as the difference of MS and HRH temperature increases. Additionally, with an assumed leakage flow of 2.8% of reheat flow the IP section efficiency increases as the difference of MS and HRH temperature increases. However, at an assumed leakage flow of 2.3%, the IP section efficiency remains constant as the difference of MS and HRH temperature changes. Recalling that IP section efficiency remains constant over any given operating range, it can be concluded that the leakage flow rate must be 2.3% of the reheat flow.

Copyright ASME International
Provided by IHS under license with ASME
No reproduction or networking permitted without license from IHS
Not for Resale

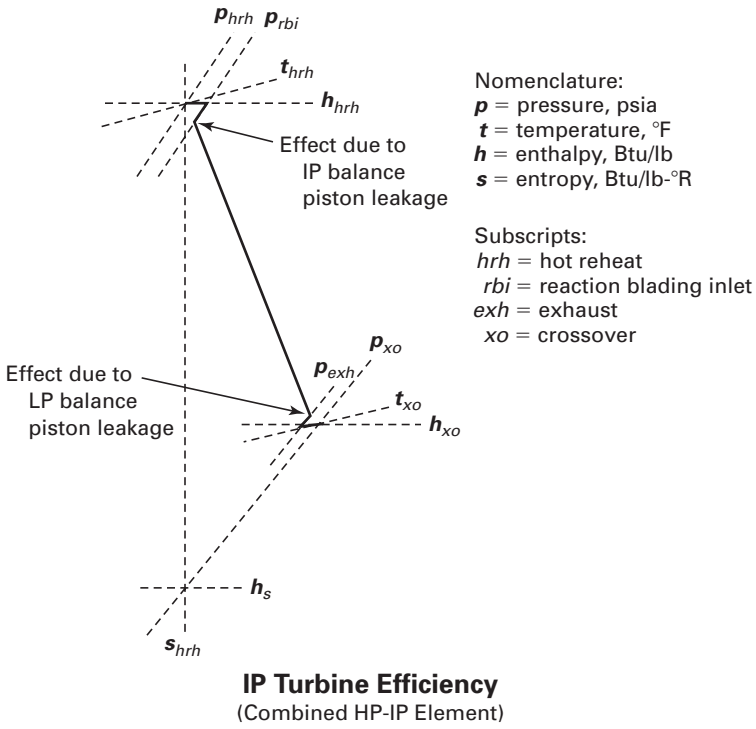

Fig. D-4 IP Turbine Steam Expansion Line

D-4 HP TO IP LEAKAGE DETERMINATION BY RATIO OF SLOPES METHOD

In most reaction turbines, (i.e., turbines where the energy drop is approximately equal in both the stationary rows as well as in the rotating rows), the HP to IP leakage flows are as follows:

(a) leakage flows past the IP balance piston and into the IP inlet bowl area

(b) leakage flows past the LP balance piston and into the IP exhaust area

The first mentioned leakage flow enters the IP bowl at the inlet to the reaction blading, while the second mentioned leakage enters at the IP exhaust area. Both of these leakage flows cause the crossover enthalpy to be lower than it would have been without leakage flows. Hence, the depression in the crossover enthalpy is in direct proportion to the magnitude of leakage flows (see the two isobaric lines in the IP turbine steam expansion line, shown in Fig. D-4.

The amount of HP to IP leakage flow may be determined by observing the effects that varying amounts of assumed leakage flows have on tested IP efficiency, for different throttle and reheat conditions and then comparing the results with expected (or calculated) variation in IP efficiency utilizing design (from vendor supplied heat balances) leakage flows, at similar throttle and reheat conditions. This is the Ratio of Slopes principle whose methodology is outlined in para. D-4.1. Note, that this principle is similar to the temperature inference variation method described above.

D-4.1 Calculation Methodology for Ratio of Slopes Method

The step-by-step procedure to determine HP to IP turbine leakage flows using the Ratio of Slopes method is as follows:

Step 1: Using design HP to IP turbine leakage flow (l_{design}), conduct a heat balance calculation with design steam conditions [e.g., 565.56°C (1,050°F) throttle temperature and 537.78°C (1,000°F) hot reheat temperature] to determine the following quantities:

$\delta(H)_{565/537@\text{designleakage}}$ = Hot Reheat Enthalpy minus Throttle Enthalpy at design leakage, and IP$\eta_{565/537@\text{designleakage}}$.

Step 2: Similarly, with design HP to IP turbine leakage flow (l_{design}), run another heat balance calculation with

Copyright ASME International
Provided by IHS under license with ASME
No reproduction or networking permitted without license from IHS
Not for Resale

off design steam conditions [e.g., 537.78°C (1,000°F) throttle temperature and 565.56°C (1,050°F) hot reheat temperature]. Again, determine the following quantities from the above heat balance calculation:

$\delta(H)_{537/565@designleakage}$ = Hot Reheat Enthalpy minus Throttle Enthalpy at design leakage, and $IP\eta_{537/565@designleakage}$.

Step 3: Then determine the sensitivity ($S_{l_{design}}$) of $IP\ \eta$ at design leakage (l_{design}) as follows:

$$S_{l_{design}} = \frac{IP\eta_{565/537@designleakage} - IP\eta_{537/565@designleakage}}{[\delta(H)_{565/537@designleakage} - \delta(H)_{537/565@designleakage}]}$$

The parameter ($S_{l_{design}}$) is also the slope of the curve $\Delta(IP\eta)$ versus $\Delta[\delta(H)_{HotReheat/Throttle}]$ at design HP to IP turbine leakage flow (l_{design}). Often the Original Equipment Manufacturer's (OEM's) help may be required to provide accurate data required as input for the above calculations.

Step 4: At actual (or test) HP to IP turbine leakage flow (l_{test}), conduct an IP turbine enthalpy drop test at steam conditions as close as possible to design. Determine $\delta(H)_{test\#1@testleakage}$ = Hot Reheat Enthalpy minus Throttle Enthalpy at test leakage, and $IP\eta_{test\#1@testleakage}$.

Step 5: Similarly, at actual (or test) HP to IP turbine leakage flow (l_{test}), conduct an IP turbine enthalpy drop test with varying steam conditions [e.g., at throttle temperature $(T_{Throttle})_{test\#2}$ as close to 537.78°C (1,000°F) and $(T_{HotReheat})_{test\#2}$ 565.56°C (1,050°F) hot reheat temperature as practically possible]. Determine $\delta(H)_{test\#2@testleakage}$ = Hot Reheat Enthalpy minus Throttle Enthalpy at test leakage, and $IP\eta_{test\#2@testleakage}$.

NOTES (Steps 4 and 5):

(1) Before running tests as outlined in Steps 4 and 5, consult the turbine manufacturer for maximum allowable temperature difference between $T_{throttle}$ and $T_{HotReheat}$. Usually, most OEMs limit the above temperature difference to 41.67°C (75°F).

(2) It is not necessary to conduct the tests in Steps 4 and 5 at exactly the same temperatures described, because only the Ratio of Slopes (or their sensitivities) are being sought [i.e., Ratio of Tested Slope ($S_{l_{test}}$) to Design Slope ($S_{l_{design}}$) is needed to determine the tested HP to IP leakage flows (l_{test})].

Step 6: Now determine the sensitivity ($S_{l_{test}}$) of $IP\eta$ at test leakage (l_{test}) as follows:

$$S_{l_{test}} = \frac{IP\eta_{test\#1@testleakage} - IP\eta_{test\#2@testleakage}}{[\delta(H)_{test\#1@testleakage} - \delta(H)_{test\#2@testleakage}]}$$

Similarly, the parameter ($S_{l_{test}}$) is also the slope of the curve $\Delta(IP\eta)$ versus $\Delta[\delta(H)_{HotReheat/Throttle}]$ at the test HP to IP turbine leakage flow (l_{test}).

Step 7: Lastly, determine the test leakage (l_{test}) as follows:

$$l_{test} = \frac{(l_{design})(S_{l_{test}})}{S_{l_{design}}}$$

D-5 GUIDING PRINCIPLES FOR TEMPERATURE INFERENCE, IP EFFICIENCY PLOT, AND RATIO OF SLOPES METHODS

In order to increase the accuracy of test results, for the methods described above, it is important to follow certain guidelines. The following steps should be followed when conducting these tests:

(a) The test must be conducted while holding steam temperatures, pressures, and flows constant. The enthalpy of the first stage is dependent upon the first stage efficiency and the first stage efficiency is highly dependent upon the control valve position. Therefore, there is a significant change in the first stage efficiency as the valve position changes. As a result, and in order to minimize errors associated with these tests, the control valves should be in a fixed position and for sliding pressure turbines it is imperative that they remain in the wide open position for the duration of each test.

(b) These tests require that the unit operate near base load at different combinations of inlet temperatures to the HP and IP sections of the steam turbine. Typically, a test run is conducted at each of three different temperature conditions. These temperature conditions may be classified as follows:

(*1*) Superheat and Reheat Temperatures Equivalent [e.g., ~552°C / ~552°C (~1,025°F / ~1,025°F)]

(2) Superheat Temperature Approximately 28°C (50°F) greater than Reheat Temperature (e.g., ~552°C/ 524°C [~1,025°F / ~975°F])

(*3*) Reheat Temperature Approximately 28°C (50°F) greater than Superheat Temperature [e.g., ~524°C/ ~552°C (~975°F / ~1,025°F)]

(c) The duration of each of these test runs should be at least 30 min, but will likely require much longer amount of time in between runs to change the superheat and reheat temperatures and achieve steady-state conditions.

(d) The temperature splits described above can usually be achieved by using the spray flows to attemperate the superheat and reheat steam temperatures.

Copyright ASME International
Provided by IHS under license with ASME
No reproduction or networking permitted without license from IHS Not for Resale

(e) Cycle isolation is not required for these test runs. However, the LP admission flow must be diverted from entering the steam turbine by using the LP bypass to the condenser. The unit must be operated in this fashion during the duration of each test run.

(f) The gas turbines should be operated at steady load during the entire HP to IP packing test.

(g) The HP to IP packing test should be conducted as close to the time as the benchmark test to yield results indicative of the HP to IP packing condition at the time of the test.

(h) The procedure is based upon changes in measured efficiency. Any errors in instrumentation or changes in operating conditions can therefore have a relatively large effect on the results. Therefore, to obtain the most accurate results, it is essential to have instrumentation of accuracy consistent with the requirements of this code and very steady, repeatable conditions during these tests.

D-5.1 Obtaining Temperature Spreads Between Main Steam (MS) and Reheat Steam (HRH)

Experience has shown that it is usually more difficult to obtain a temperature spread between MS and HRH, when lowering MS temperature. The actual spread obtained between the MS and HRH temperature will depend on several factors including ambient temperature, HRSG design, attemperation spray capacity, load, and operator experience.

Unlike conventional steam turbine systems, combined cycle plants with unfired HRSG's exhibit significant performance variation as a result of gas turbine dependency on ambient conditions. This can make it difficult to establish temperature spreads between MS and HRH. In addition, combined cycle plants normally operate at "floating pressure" conditions that allow the system's operating pressures to peak at the maximum flow point. Based on the above characteristics of combined cycle systems, it is generally easier to obtain temperature spreads between MS and HRH by lowering MS temperature on a cooler day. If ambient temperatures are too cold, these tests can be conducted at about 75% of base load. At part loads, the attemperation sprays will increase, thus allowing the option to decrease sprays to obtain the desired temperatures. Conversely, it will be more difficult to obtain a temperature spread between MS and HRH, by lowering MS temperature on a hot day.

Based on the above, these tests should be executed, whenever possible, when ambient temperatures and loads allow for the desired test conditions needed to obtain the required temperature spreads. It is also recommended to first run the two tests where the MS and HRH temperatures are spread. Then the last test should be conducted based on the average spread between the first two tests. For example, if the temperature spread between MS and HRH temperature in first test was 516°C − 532°C = −16°C [960°F − 990°F = −30°F], and the temperature spread in the second test was 538°C − 510°C = 28°C [1000°F − 950°F = 50°F], then the last test should be run with MS temperature at (538°C + 516°C)/2 = 527°C [(1000°F + 960°F)/2 = 980°F] and HRH temperature at (510°C + 532°C)/2 = 521°C [(950°F + 990°F)/2 = 970°F]. This will yield a more uniform distribution between the three tests when determining HP to IP leakage flow.

D-5.2 HP to IP Leakage Flow Enthalpy

An essential part of these methods (temperature inference, IP efficiency plots, and ratio of slopes) is the assumption that the enthalpy of the HP to IP leakage steam is known. The methods described above will detect total leakage from the HP to IP and not just the packing leakage. If leakage occurs across the shell fits in addition to the packing, then it is impossible to assess the mixed leakage enthalpy; however, these procedures are not very sensitive to assumed enthalpy when used only to derive the leakage flow, which is ultimately the objective of these tests within the context of this code. One method to determine the HP to IP leakage flow enthalpy is to construct the HP turbine section steam expansion line and select the enthalpy that corresponds with the intersection of the first stage shell pressure. It is also reasonable to assume that the first stage enthalpy drop is the same as shown on the design heat balance for the same Throttle Flow Ratio (TFR), or ratio of first stage pressure to throttle pressure.

D-6 BLOWDOWN METHOD

A method of determining the internal packing flow and clearance using the steam turbine emergency blowdown system may be utilized to determine the packing flow itself. The blowdown system is a safety feature that connects the internal HP to IP packing to the condenser. This method yields the actual flow through the packing but may not account for any other HP to IP leakage flows.

During normal operation, the blowdown valve is closed and no steam flows through the blowdown piping to the condenser. Modifications to the blowdown system may be made and instrumentation installed so that steam flowing through the blowdown system is controlled and its quantity measured. A representative diagram is shown in Fig. D-6.

Copyright ASME International
Provided by IHS under license with ASME
No reproduction or networking permitted without license from IHS Not for Resale

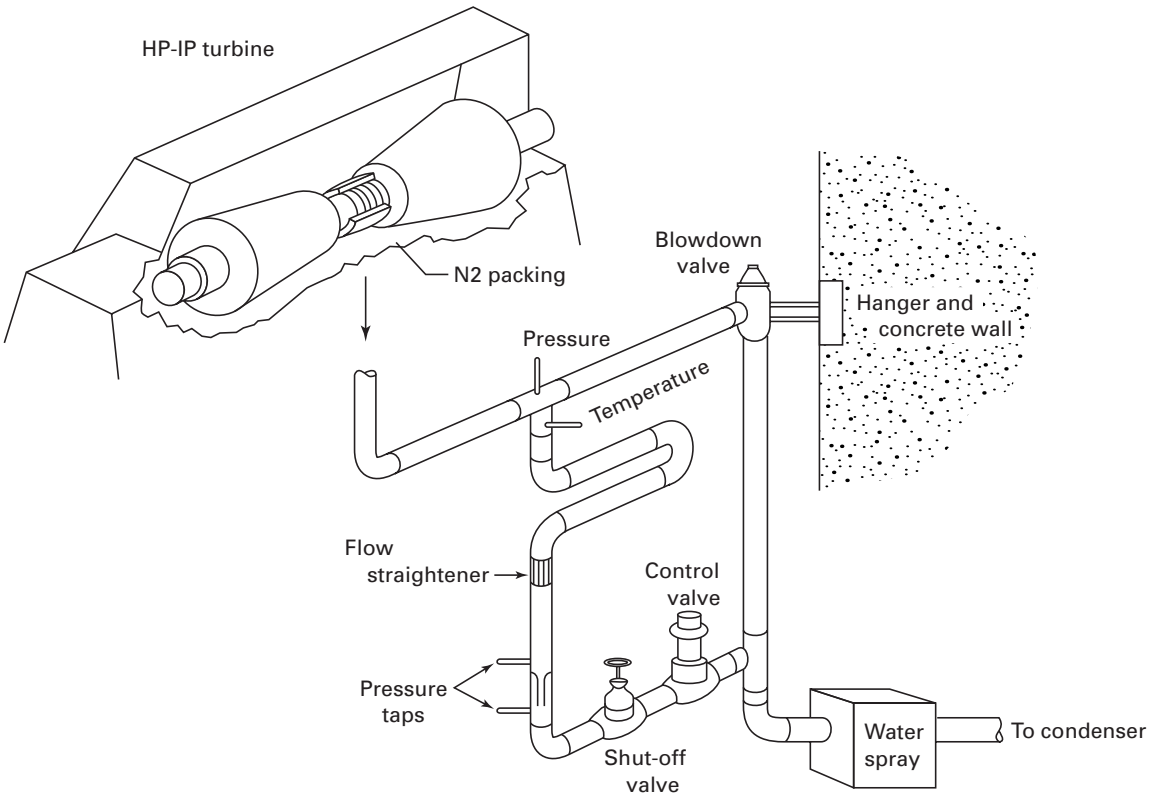

Fig. D-6 Internal Packing (N2) Measurement System

The blowdown method is used to indirectly determine the internal packing clearance. Blowdown tests may be conducted where a controlled amount of leakage steam flow is allowed to pass through the blowdown system to the condenser. With knowledge of the blowdown piping annulus area and reheat bowl steam conditions, measurements of the blowdown steam temperature and flow, and measurements of pressure, at the first stage exit, the clearance of the internal packing may be calculated.

Once the clearance of the internal packing is known, the steam flow through the packing, under normal operating conditions (no blowdown flow), can be calculated using measurements of pressure at the first stage exit and reheat bowl.

D-6.1 Calculation Methodology for Blowdown Method

The internal packing arrangement of a typical HP/IP opposed flow unit is shown schematically in Fig. D-6.1. Pressures and flows shown in the figure, and parameters used in the equations that follow are listed below.

A = leakage area, cm^2 [in.^{2}]. Area is calculated as shown in Eq. (D-1)

β_1 = a function of the number of teeth and pressure ratio across the portion of the internal packing between the first stage and the blowdown annulus, see Eq. (D-2). For this example, there are 16 teeth in the section of packing.

β_2 = a function of the number of teeth and pressure ratio across the portion of the internal packing between the blowdown annulus and the RH turbine section, see Eq. (D-3). For this example, there are 30 teeth in the section of packing.

β_t = a function of the number of teeth and pressure ratio across the entire internal packing between the first stage and the reheat bowl, see Eq. (D-4). For this example, there are 46 teeth in the internal packing.

C = packing clearance, cm (in.)

D = packing diameter of 63.5 cm (25.0 in.) is used for this example

k = a factor for the packing type and condition. For this example, the internal packing factor, k, is taken to be 3.80 (54.0).

Copyright ASME International
Provided by IHS under license with ASME
No reproduction or networking permitted without license from IHS Not for Resale

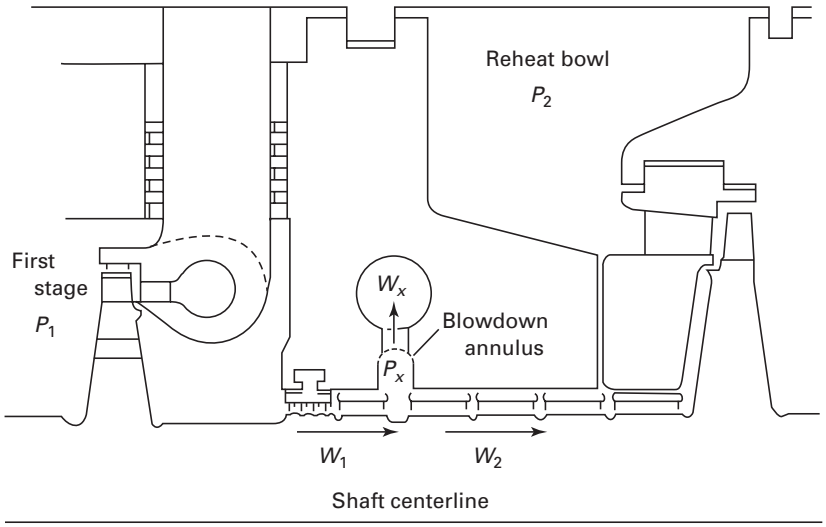

Fig. D-6.1-1 Internal Packing Arrangement of a Typical HP/IP Opposed Flow Unit

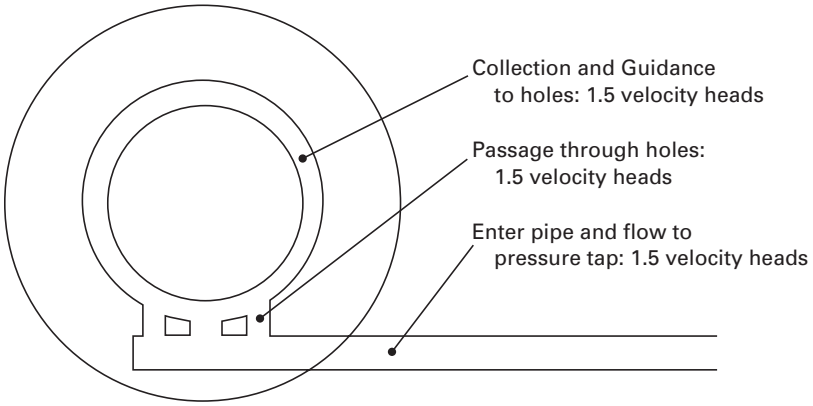

Fig. D-6.1-2 Estimated Loss of Pressure for Steam Being Drawn From the Packing Area into the Blowdown Pipe and Bypass System

P_1 = first stage pressure, kg/cm^2 (psia)
P_2 = pressure at the reheat bowl, kg/cm^2 (psia)
P_x = pressure at the blowdown annulus, kg/cm^2 (psia)
V_1 = specific volume of steam at the first stage, cm^3/kg (ft^3/lbm)
V_x = specific volume of steam at the blowdown annulus, cm^3/kg (ft^3/lbm)
W_1 = leakage flow from the HP turbine section into the internal packing, kg/hr (lbm/hr)
W_2 = leakage flow from the internal packing into the reheat bowl, kg/hr (lbm/hr)
W_x = steam flow through the blowdown system, kg/hr (lbm/hr)

Pressure at the blowdown annulus, P_x, may be determined by calculation of the pressure drop between the blowdown annulus and the pressure tap that has been located as close to the turbine shell as practical. Figure D-6.1-2 shows an estimated loss of pressure for steam being drawn from the packing area into the blowdown pipe and bypass system. The total loss is estimated to be about 4.5 velocity heads to the location of the pressure tap. The velocity will be low during normal test operation, so accuracy in determining the local velocity is not critical. If doubts arise concerning the accuracy in P_x determination, a trial and error system can be formulated to provide a check. When packing clearance increases, the bypass flow needs to be larger in order to provide adequate sensitivity in

Copyright ASME International
Provided by IHS under license with ASME
No reproduction or networking permitted without license from IHS Not for Resale

regard to a significant change in P_x. For example, with a clearance of 1.778 mm (0.070 in.), the change in P_x with 66 120 kg/h (30,000 lbm/h) bypass flow will be about 40% of that obtained at 0.889 mm (0.035 in.). Still, this is about 16.9 kg/cm^2 (240 psia) and should provide a satisfactory accuracy when the relatively wall instrument and calculation errors are considered.

The enthalpy of the bypass steam should be used to determine the specific volume of the steam at both calculation points (W_1 and W_2). This enthalpy also has some value in determining steam conditions at the discharge of the first stage, although it should be recognized that it might be somewhat high due to rotation loss, conduction from nozzle boxes, etc.

$$A = \Pi \text{ D C} \tag{D-1}$$

$$\beta_1 = \sqrt{\frac{1.0 - (P_x/P_1)^2}{16.0 - \log_e(P_x/P_1)}} \tag{D-2}$$

$$\beta_2 = \sqrt{\frac{1.0 - (P_2/P_x)^2}{30.0 - \log_e(P_2/P_x)}} \tag{D-3}$$

$$\beta_t = \sqrt{\frac{1.0 - (P_2/P_1)^2}{46.0 - \log_e(P_2/P_1)}} \tag{D-4}$$

Use of Martin's Formula (see subsection D-7) and the conservation of mass relationship permits expressions for the flows W_1, W_2, and W_x to be developed. These are given below in Eqs. D-5, D-6, and D-7

(SI Units)

$$W_1 = 23\,500\ kA\ \beta_1 \sqrt{\frac{P_1}{V_1}} \tag{D-5}$$

(U.S. Customary Units)

$$W_1 = 25.0\ kA\ \beta_1 \sqrt{\frac{P_1}{V_1}}$$

(SI Units)

$$W_2 = 23\,500\ kA\ \beta_2 \sqrt{\frac{P_x}{V_x}} \tag{D-6}$$

(U.S. Customary Units)

$$W_2 = 25.0\ kA\ \beta_2 \sqrt{\frac{P_x}{V_x}}$$

$$W_x = W_1 - W_2 \tag{D-7}$$

Assuming the clearance is uniform throughout the packing (the same for all rings), Eq. (D-8) can be used to determine the internal packing clearance:

(SI Units)

$$C = \frac{W_x}{23\,500\ \pi kD\ (\beta_1\sqrt{P_1/V_1} - \beta_2\sqrt{P_x/V_x})} \tag{D-8}$$

(U.S. Customary Units)

$$C = \frac{W_x}{25\pi kD\ (\beta_1\sqrt{P_1/V_1} - \beta_2\sqrt{P_x/V_x})} \tag{D-8}$$

From the determined internal packing clearance and known steam conditions, packing leakage flows can be calculated as a function of blowdown annulus pressure P_x. In the example below, steam conditions are: P_1 = 137 kg/cm^2 (1,944 psia), V_1 = 14.1 cm^3/kg (0.3902 ft^3/lbm), P_2 = 33.1 kg/cm^2 (469.5 psia). A packing clearance of 0.889 mm (0.035 in.) is determined for the example. With the internal packing clearance calculated and the pressure at the blowdown annulus, P_x, known, the internal packing flows W_1 and W_2, from Eqs. (D-5) and (D-6), are determined. As the internal leakage flow increases, P_x decreases. Results are shown in Table D-6.1 and plotted in Fig. D-6.1-3.

D-6.2 Discussion

With zero blowdown flow (normal operation), W_1 [Eq. (D-5)] must be equal to W_2 [Eq. (D-6)]. Since P_1 and P_2 are known, P_x can then be determined. For the example above, P_x is 1,601 psia, a pressure lower than first stage pressure by 23% of the pressure drop between the first stage and the reheat bowl.

For some designs, it may be important to avoid changing main steam temperature from one test to the next as past studies have shown that changing main steam temperature might cause a change in the packing clearances (reference ASME paper, "HP to IP Turbine Leakage Flow Measurement: A Comparison" by Staggers and Priestley).

Copyright ASME International
Provided by IHS under license with ASME
No reproduction or networking permitted without license from IHS Not for Resale

Table D-6.1 Pressure at Blowdown Annulus and Packing Flows

P_x		W_1		W_2		W_x	
Kg/cm²	lbf/in.²	Kg/hr	lbm/hr	Kg/hr	lbm/hr	Kg/hr	lbm/hr
112.6	1,601	13 055	36,921	13 055	36,921	0	0
105.5	1,500	14 611	41,321	12 148	34,356	2 463	6,965
98.4	1,400	15 902	44,974	11 256	31,834	4 646	13,140
91.4	1,300	17 003	48,087	10 355	29,286	6 648	18,801
84.4	1,200	17 948	50,759	9 443	26,706	8 505	24,053
77.3	1,100	18 760	53,056	8 515	24,082	10 245	28,974
70.3	1,000	19 456	55,024	7 567	21,400	11 889	33,623
63.3	900	20 047	56,695	6 590	18,636	13 457	38,059
56.2	800	20 541	58,092	5 567	15,745	14 974	42,347
49.2	700	20 943	59,230	4 470	12,643	16 473	46,587
42.2	600	21 278	60,177	3 223	9,116	18 034	51,001

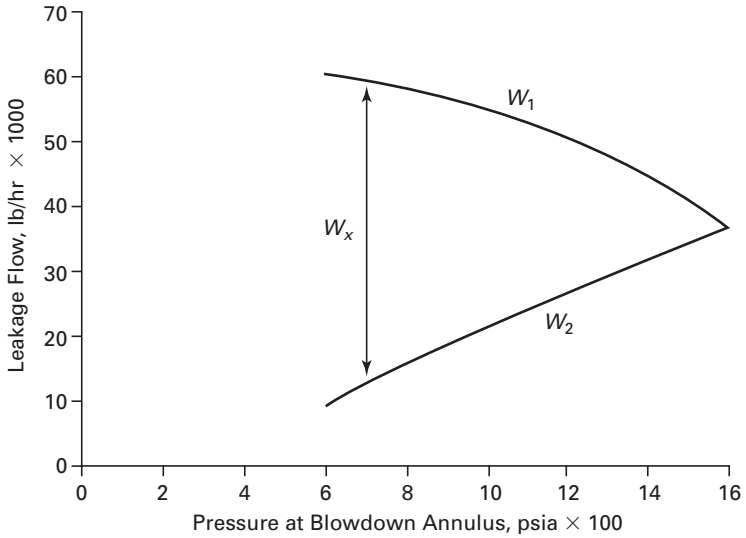

Fig. D-6.1-3 Leakage Flow Characteristics

D-6.3 Guiding Principles for Blowdown Method

(a) A VWO test should include two rates of bypass flow. Expected normal design flow and about half of normal design flow is suggested.

(b) Pressure in the bypass line should also be recorded with zero bypass flow.

(c) The calculated clearance should be the same for all tests. If the calculated clearance varies significantly, added test conditions will be necessary to determine what factor (such as main steam temperature, reheat temperature, first stage shell temperature, etc.) causes the deviation.

(d) The bypass flow should be set and sufficient time allowed for steady state conditions to become established. Thirty minutes is suggested, although careful observation for stabilization may indicate when stability actually occurs. It is essential that all parts of the system are in thermal equilibrium prior to recording data.

(e) The turbine should also be maintained at a fixed valve position. This is necessary to minimize errors due to temperature fluctuation.

(f) Thirty minutes of test data is recommended.

D-7 REFERENCES

(a) Spencer, R.C.; Cannon, C.N.; Cotton, K.C.; *A Method for Predicting the Performance of Steam Turbine-Generators 16 500 KW and Larger*, ASME 62-WA-209, 1962, Revised 1974.

(b) Salisbury, J.K, *Steam Turbines and Their Cycles*, Robert E. Krieger Publishing Company, Huntington, N.Y., 1974.

Copyright ASME International
Provided by IHS under license with ASME
No reproduction or networking permitted without license from IHS
Not for Resale

--`,,```,,,,````-`-`,,`,,`,`,,`---

Copyright ASME International
Provided by IHS under license with ASME
No reproduction or networking permitted without license from IHS

Not for Resale

PERFORMANCE TEST CODES (PTC)

General Instructions . . . . . PTC 1-2004
Definitions and Values . . . . . PTC 2-2001
Diesel and Burner Fuels . . . . . PTC 3.1-1958 (R1992)
Fired Steam Generators . . . . . PTC 4-1998
Steam-Generating Units (With 1968 and 1969 Addenda . . . . . PTC 4.1-1964 (R1991)
  Diagram for Testing of a Steam Generator, Figure 1 (Pad of 100)
  Heat Balance of a Steam Generator, Figure 2 (Pad of 100)
ASME Test Form for Abbreviated Efficiency Test — Summary Sheet (Pad of 100) . . . . . PTC 4.1a-1964
ASME Test Form for Abbreviated Efficiency Test — Calculation Sheet (Pad of 100) . . . . . PTC 4.1b-1964 (R1965)
Coal Pulverizers . . . . . PTC 4.2-1969 (R2003)
Air Heaters . . . . . PTC 4.3-1968 (R1991)
Gas Turbine Heat Recovery Steam Generators . . . . . PTC 4.4-1981 (R2003)
Reciprocating Steam Engines . . . . . PTC 5-1949
Performance Tests Code 6 on Steam Turbines . . . . . PTC 6-1996 (R2003)
Interim Test Codes for an Alternative Procedure for Testing Steam Turbines . . . . . PTC 6.1-1984
Steam Turbines in Combined Cycles . . . . . PTC 6.2-2004
Appendix A to PTC 6, The Test Code for Steam Turbines . . . . . PTC 6A-2000
PTC 6 on Steam Turbines — Interpretations . . . . . PTC 6
Guidance for Evaluation of Measurement Uncertainty in Performance Tests of Steam Turbines . . . . . PTC 6 Report-1985 (R2003)
Procedures for Routine Performance Tests of Steam Turbines . . . . . PTC 6S-1988 (R2003)
Reciprocating Steam-Driven Displacement Pumps . . . . . PTC 7-1949 (R1969)
Displacement Pumps . . . . . PTC 7.1-1962 (R1969)
Centrifugal Pumps . . . . . PTC 8.2-1990
Performance Test Code on Compressors and Exhausters . . . . . PTC 10-1997 (R2003)
Fans . . . . . PTC 11-1984 (R2003)
Closed Feedwater Heaters . . . . . PTC 12.1-2000
Performance Test Code on Steam Surface Condensers . . . . . PTC 12.2-1998
Performance Test Code on Deaerators . . . . . PTC 12.3-1997 (R2004)
Moisture Separator Reheaters . . . . . PTC 12.4-1992 (R2004)
Single Phase Heat Exchangers . . . . . PTC 12.5-2000
Reciprocating Internal-Combustion Engines . . . . . PTC 17-1973 (R2003)
Hydraulic Turbines and Pump-Turbines . . . . . PTC 18-2002
Test Uncertainty . . . . . PTC 19.1-1998 (R2004)
Pressure Measurement . . . . . PTC 19.2-1987 (R2004)
Temperature Measurement . . . . . PTC 19.3-1974 (R2004)
Application, Part II of Fluid Meters: Interim Supplement on Instruments and Apparatus . . . . . PTC 19.5-2004
Weighing Scales . . . . . PTC 19.5.1-1964
Electrical Measurements . . . . . PTC 19.6-1955
Measurement of Shaft Power . . . . . PTC 19.7-1980 (R1988)
Measurement of Indicated Power . . . . . PTC 19.8-1970 (R1985)
Flue and Exhaust Gas Analyses . . . . . PTC 19.10-1981
Steam and Water Sampling, Conditioning, and Analysis in the Power Cycle . . . . . PTC 19.11-1997 (R2004)
Measurement of Time . . . . . PTC 19.12-1958
Measurement of Rotary Speed . . . . . PTC 19.13-1961
Linear Measurements . . . . . PTC 19.14-1958
Density Determinations of Solids and Liquids . . . . . PTC 19.16-1965
Determination of the Viscosity of Liquids . . . . . PTC 19.17-1965
Digital Systems Techniques . . . . . PTC 19.22-1986 (R2003)
Guidance Manual for Model Testing . . . . . PTC 19.23-1980 (R1985)
Speed and Load Governing Systems for Steam Turbine-Generator Units . . . . . PTC 20.1-1977 (R1988)
Overspeed Trip Systems for Steam Turbine-Generator Units . . . . . PTC 20.2-1965 (R1986)
Pressure Control Systems Used on Steam Turbine-Generator Units . . . . . PTC 20.3-1970 (R1991)
Particulate Matter Collection Equipment . . . . . PTC 21-1991
Performance Test Code on Gas Turbines . . . . . PTC 22-1997 (R2005)
Atmospheric Water Cooling Equipment . . . . . PTC 23-2003
Ejectors . . . . . PTC 24-1976 (R1982)
Pressure Relief Devices . . . . . PTC 25-2001
Safety and Relief Valves . . . . . PTC 25.3-1988
Speed-Governing Systems for Internal Combustion Engine-Generator Units . . . . . PTC 26-1962
Determining the Properties of Fine Particulate Matter . . . . . PTC 28-1965 (R1985)

(*continued*)

Copyright ASME International
Provided by IHS under license with ASME
No reproduction or networking permitted without license from IHS
Not for Resale

PERFORMANCE TEST CODES (PTC) (*continued*)

Speed-Governing Systems for Hydraulic Turbine-Generator Units . . . . . PTC 29-1965 (R1985)
Air Cooled Heat Exchangers . . . . . PTC 30-1991 (R1998)
Ion Exchange Equipment . . . . . PTC 31-1973 (R1985)
Nuclear Steam Supply Systems . . . . . PTC 32.1-1969 (R1992)
Methods of Measuring the Performance of Nuclear Reactor Fuel in Light Water Reactors . . . . . PTC 32.2 Report-1978 (R1992)
Large Incinerators . . . . . PTC 33-1978 (R1985)
Appendix to PTC 33-1978 . . . . . PTC 33a-1980 (R1991)
ASME Form for Abbreviated Incinerator Efficiency Test Form . . . . . PTC 33a-1980 (R1991)
Measurement of Industrial Sound . . . . . PTC 36-2004
Determining the Concentration of Particulate Matter in a Gas Stream . . . . . PTC 38-1980(R1985)
Condensate Removal Devices for Steam Systems . . . . . PTC 39.1-1980 (R1991)
Flue Gas Desulfurization Units . . . . . PTC 40-1991
Wind Turbines . . . . . PTC 42-1988 (R2004)
Performance Test Code on Overall Plant Performance . . . . . PTC 46-1996
Fuel Cell Power Systems Performance . . . . . PTC 50-2002
Performance Monitoring Guidelines for Steam Power Plants . . . . . PTC PM-1993

The ASME Publications Catalog shows a complete list of all the Standards published by the Society. For a complimentary catalog, or the latest information about our publications, call 1-800-THE-ASME (1-800-843-2763).

--`,,```,,,,````-`-`,,`,,`,`,,`---

Copyright ASME International
Provided by IHS under license with ASME
No reproduction or networking permitted without license from IHS

Not for Resale

ASME PTC 6.2-2004

ISBN 0-7918-2925-1





C06704

Copyright ASME International
Provided by IHS under license with ASME
No reproduction or networking permitted without license from IHS

Not for Resale