ASME PTC*40 91 ■ 0759670 0543010 835 ■

AN AMERICAN NATIONAL STANDARD

ASME
PTC 40-1991

Flue Gas Desulfurization Units

PERFORMANCE
TEST
CODES

THE AMERICAN SOCIETY OF MECHANICAL ENGINEERS
United Engineering Center
345 East 47th Street New York, N.Y. 10017

Copyright ASME International
Provided by IHS under license with ASME
No reproduction or networking permitted without license from IHS
Not for Resale

ASME PTC*40 91 ■ 0759670 0543011 771 ■

Flue Gas Desulfurization Units

PERFORMANCE TEST CODES

ASME PTC 40-1991

AN AMERICAN NATIONAL STANDARD

THE AMERICAN SOCIETY OF MECHANICAL ENGINEERS

United Engineering Center 345 East 47th Street New York, N.Y. 10017

Copyright ASME International
Provided by IHS under license with ASME
No reproduction or networking permitted without license from IHS

Not for Resale

Date of Issuance: January 31, 1992

This document will be revised when the Society approves the issuance of the next edition, scheduled for 1996. There will be no Addenda issued to ASME PTC 40-1991.

Please Note: ASME issues written replies to inquiries concerning interpretation of technical aspects of this document. The interpretations are not part of the document. PTC 40-1991 is being issued with an automatic subscription service to the interpretations that will be issued to it up to the publication of the 1996 Edition.

ASME is the registered trademark of The American Society of Mechanical Engineers.

This code or standard was developed under procedures accredited as meeting the criteria for American National Standards. The Consensus Committee that approved the code or standard was balanced to assure that individuals from competent and concerned interests have had an opportunity to participate. The proposed code or standard was made available for public review and comment which provides an opportunity for additional public input from industry, academia, regulatory agencies, and the public-at-large.

ASME does not "approve," "rate," or "endorse" any item, construction, proprietary device, or activity.

ASME does not take any postion with respect to the validity of any patent rights asserted in connection with any items mentioned in this document, and does not undertake to insure anyone utilizing a standard against liability for infringement of any applicable Letters Patent, nor assume any such liability. Users of a code or standard are expressly advised that the determination of the validity of any such patent rights, and the risk of the infringement of such rights, is entirely their own responsibility.

Participation by federal agency representative(s) or person(s) affiliated with industry is not to be interpreted as government or industry endorsement of this code or standard.

ASME accepts responsibility for only those interpretations issued in accordance with governing ASME procedures and policies which preclude the issuance of interpretations by individual volunteers.

No part of this document may be reproduced in any form,
in an electronic retrieval system or otherwise,
without the prior written permission of the publisher.

Copyright © 1992 by
THE AMERICAN SOCIETY OF MECHANICAL ENGINEERS
All Rights Reserved
Printed in U.S.A.

Copyright ASME International
Provided by IHS under license with ASME
No reproduction or networking permitted without license from IHS

Not for Resale

FOREWORD

(This Foreword is not part of ASME PTC 40-1991.)

When the twin issues of environmental protection and the need to assure a reliable supply of energy became important public concerns in the 1970s, the Board on Performance Test Codes began to explore the possibility of addressing these concerns within the test code framework. As a result of these discussions, the PTC 40 Committee on Flue Gas Desulfurization units was organized in 1978; it held its first meeting in April 1979. The Committee faced considerable initial obstacles: there were no ASME PTC documents in this area, the technology was in the early stages of rapid development, and the boundary of the FGD equipment is to some extent a matter of definition. Nevertheless, in the next several years the PTC 40 Committee gradually evolved a systematic testing procedure for FGD units. The PTC 40 code draft was approved by the Board on Performance Test Codes on May 11, 1990. The Code was adopted by the American National Standards Institute as an American National Standard on March 19, 1991.

All ASME codes are copyrighted, with all rights reserved to the Society. Reproduction of this or any other ASME code is a violation of Federal law. Legalities aside, the user should appreciate that the publishing of the high quality codes that have typified ASME documents requires a substantial commitment by the Society. Thousands of volunteers work diligently to develop these codes. They participate on their own or with a sponsor's assistance and produce documents that meet the requirements of an ASME consensus standard. The codes are very valuable pieces of literature to industry and commerce, and the effort to improve these "living documents" and develop additional needed codes must be continued. The monies spent for research and further code development, administrative staff support and publication are essential and constitute a substantial drain on ASME. The purchase price of these documents helps offset these costs. User reproduction undermines this system and represents an added financial drain on ASME. When extra copies are needed, you are requested to call or write the ASME Order Department, 22 Law Drive, Box 2300, Fairfield, New Jersey 07007-2300, and ASME will expedite delivery of such copies to you by return mail. Please instruct your people to buy required test codes rather than copy them. Your cooperation in this matter is greatly appreciated.

Copyright ASME International
Provided by IHS under license with ASME
No reproduction or networking permitted without license from IHS
Not for Resale

PERSONNEL OF PERFORMANCE TEST CODE COMMITTEE NO. 40 FLUE GAS DESULFURIZATION UNITS

(The following is the roster of the Committee at the time of approval of this Standard.)

OFFICERS

R. W. Henry, *Chairman*
G. W. Tracy, *Vice-Chairman*
G. Osolsobe, *Secretary*

COMMITTEE PERSONNEL

W. DePriest, Sargent and Lundy Engineers, Inc. (Babcock and Wilcox)
E. R. Dille, Sargent and Lundy Engineers, Inc. (Burns and McDonnell, Inc.) (Past Chairman)
R. W. Henry, Salt River Project
M. G. Klett, Gilbert/Commonwealth, Inc.
J. N. Lacey, Utah Power and Light, Inc.
K. W. Malki, CE Combustion Engineering, Inc.
M. L. Meadows, Black and Veatch
J. N. Seibel, Cincinnati Gas and Electric Co.
G. W. Tracy, Joy Technologies, Inc.
P. R. Westlin, U. S. Environmental Protection Agency
B. A. Wrobel, Northern Indiana Public Service Co.

The PTC 40 Committee wishes to acknowledge the contributions of the following past members:

Lee J. Coe
Stephen R. Meyer
David R. Rabb

Copyright ASME International
Provided by IHS under license with ASME
No reproduction or networking permitted without license from IHS
Not for Resale

PERSONNEL OF BOARD OF PERFORMANCE TEST CODES

OFFICERS

J. S. Davis, Vice-President
N. R. Deming, Vice-Chairman

COMMITTEE PERSONNEL

A. F. Armor
R. L. Bannister
R. J. Biese
J. A. Booth
B. Bornstein
H. G. Crim, Jr.
J. S. Davis, Jr.
N. R. Deming
G. J. Gerber
P. M. Gerhart
R. Jorgensen
D. R. Keyser
W. G. McLean
G. H. Mittendorf, Jr.
R. E. Sommerlad
J. W. Murdock
S. P. Nuspl
R. P. Perkins
R. W. Perry
A. L. Plumley
C. B. Scharp
J. W. Siegmund
J. C. Westcott

Copyright ASME International
Provided by IHS under license with ASME
No reproduction or networking permitted without license from IHS
Not for Resale

CONTENTS

Foreword iii
Standards Committee Roster v

0 Introduction 1
1 Object and Scope 3
2 Definitions and Descriptions of Terms 5
3 Guiding Principles 11
4 Instruments and Methods of Measurement 15
5 Computation of Results 21
6 Report of Results 29
7 References 31

Figures
1.1 FGDS Inputs and Outputs 3
5.1 Typical FGDS 27

Tables
2.1 Constant Symbols and Terms 7
2.2 Variable Terms 8
5.1 Test Measurement Uncertainties and Effects 27

Appendices
A Types of Flue Gas Desulfurization (FGD) 33
B PTC 40 Test Method 35
C FGD Data Determination Forms 55
D Quantity Measurement of Solid Waste 63
E Example Application 67

Figures
B.1 Particulate and SO_2 Emissions Sampling Train 36
B.2 Type S Pitot Tube Manometer Assembly 38
B.3 Configurations of a Properly Constructed Type S Pitot Tube 39
B.4 Types of Face-Opening Misalignment 40
B.5 Minimum Number of Traverse Points for Particulate Traverses 43
B.6 Example Showing Circular Stack Cross Section Divided Into 12 Equal Areas, With Location of Traverse Points Indicated 44
B.7 Example Showing Rectangular Stack Cross Section Divided Into 12 Equal Areas, With a Traverse Point at Centroid of Each Area 45

Copyright ASME International
Provided by IHS under license with ASME
No reproduction or networking permitted without license from IHS
Not for Resale

D.1 Mass Balance Around the FGDS 63
D.2 The Weigh Scale Method 65
E.1 Typical Lime/Limestone System 68
E.2 Example Test Boundary 69

Tables

B.1 Cross-Section Layout for Rectangular Stacks 45
B.2 Location of Traverse Points in Circular Stacks 46
B.3 Particulate Field Data 49
C.1 Field Moisture Determination Data Form 57
C.2 Field Molecular Weight Determination Data Form 58
C.3 Field Gas Velocity Determination Data Form 59
C.4 Field SO_2 Determination Data Form 60
C.5 Field Analysis for SO_2 Determination Data Form 61
C.6 Reagent Characterization 62

Copyright ASME International
Provided by IHS under license with ASME
No reproduction or networking permitted without license from IHS
Not for Resale

ASME PERFORMANCE TEST CODES
Code on
FLUE GAS DESULFURIZATION UNITS

SECTION 0 — INTRODUCTION

0.1 PURPOSE

The purpose of this Code is to establish standard procedures for the conduct and reporting of performance tests of flue gas desulfurization systems.

This Code does not attempt to address desulfurization processes occurring in conjunction with the combustion process (e.g., reagent addition into a furnace or steam generator). Desulfurization systems treating post-combustion furnace gases or other SO_2-laden gas streams may utilize this Code.

0.2 STANDARD REFERENCES

This Code complies with the provisions of the ASME Code on General Instructions (PTC 1), and the ASME Code on Definitions and Values (PTC 2). In addition, unless otherwise specified in this Code, all instrumentation shall comply with applicable provisions of the Supplements on Instruments and Apparatus (PTC 19 Series).

0.3 CONFLICTS WITH OTHER ASME CODES

Should the specific directions given in this Code for any particular measurement differ from those given in other ASME Performance Test Codes for similar measurements, the instructions of this Code shall prevail, unless otherwise agreed to by the parties involved in the test.

0.4 UNITS

All numerical values will be given simultaneously by a primary system of units and, parenthetically, by a secondary system of units. US customary units will be the primary system. The SI units will be the secondary system.

Copyright ASME International
Provided by IHS under license with ASME
No reproduction or networking permitted without license from IHS
Not for Resale

SECTION 1 – OBJECT AND SCOPE

1.1 OBJECT

The object is to establish standard procedures for the conduct and reporting of performance tests of flue gas desulfurization systems.

1.2 SCOPE

The performance of a flue gas desulfurization system (FGDS) is defined to be the characterization of inputs and outputs (see Fig. 1.1). This may include, but is not necessarily limited to, the following:

(a) percent SO_2 removal (%R)
(b) Reagent Ratio (RRI or RRR)
(c) energy/power consumption
(d) water consumption and characterization
(e) reagent consumption and characterization
(f) waste/by-product production and characterization
(g) *Availability and Reliability.* Availability and reliability of the FGDS are not within the scope of this Code.

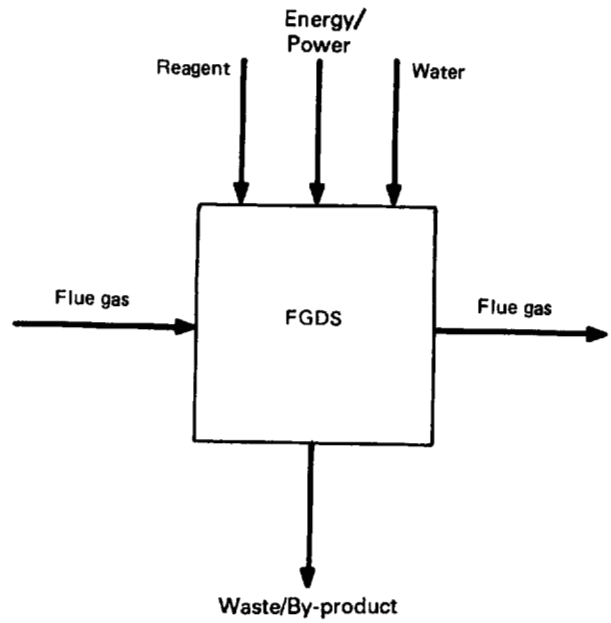

FIG. 1.1 FGDS INPUTS AND OUTPUTS

1.3 TEST RESULTS UNCERTAINTY

The physical configuration and the FGD process have a large influence on the uncertainty of the test results and are difficult to quantify. Under favorable conditions and with properly chosen instruments, uncertainties can be as low as the following:

(a) percent SO_2 removal: ±6%
(b) reagent ratio: ±7%
(c) energy/power consumption
(1) electrical: ±1%
(2) thermal: ±1%
(3) mechanical: ±6%
(d) water consumption: ±2%
(e) reagent consumption: ±8%
(f) waste/by-product consumption: ±2%

In para. 5.6 the Code provides an example of the calculation of test uncertainty which the user should consult prior to running the test.

Copyright ASME International
Provided by IHS under license with ASME
No reproduction or networking permitted without license from IHS
Not for Resale

ASME PTC*40 91 ■ 0759670 0543020 784 ■

SECTION 2 — DEFINITIONS AND DESCRIPTIONS OF TERMS

2.1 DEFINITIONS

additive — substance added to a liquid or gas stream to cause a chemical or physical reaction to enhance the SO_2 sorption process. Other substances can be added, but for the purposes of this Code, only those mentioned above will be considered.

alkalinity — capacity of an alkaline material to neutralize SO_2

alkalinity, reactive — determined by acid titration and expressed as moles of alkali per pound of material or as moles of alkali per mole of SO_2 (absorbed or inlet).

alkalinity, total (to be distinguished from reactive alkalinity) — theoretical expression determined from a chemical analysis of the material

by-product — material generated in removing SO_2 from the FGDS, which has commercial value

consumption, energy/power — compilation of all energy/power inputs to the FGDS

consumption, water — water added to the FGDS

efficiency (%R) — ratio of removed SO_2 to input SO_2

effluent — stream exiting the FGDS, whether solid, liquid, or gas

entrainment — suspension of liquid droplets in the flue gas stream

flue gas — gaseous products of combustion

Flue Gas Desulfurization System (FGDS) — the process and equipment employed to remove sulfur oxides from flue gas or other sulfur oxide-laden gas stream. This may include any process or equipment required for the conversion of the sulfur oxides to an essentially non-volatile sulfur species for disposal or other use. This gas stream is typically generated by the combustion of fossil fuels, but may include other gas streams (e.g., from smelting processes). FGDS is not defined to include the removal of sulfur oxides from gases during the combustion process. For further discussion, see Appendix A.

grit — impurities in as-received calcined lime which may include some uncalcined carbonate, hard burned lime, insoluble silicates, aluminates, sulfates and ferrites, all of which were in the limestone before it was calcined. Grit may also include some external impurities such as refractory brick pieces and tramp iron.

liquor — solution of liquid and dissolved solids

L/G ratio — liquid-to-gas ratio

$$\frac{L}{G}\ \text{Ratio} = \frac{\text{Recirculated absorbent slurry or liquor flow rate (gal/min)}}{\text{Absorber outlet gas flow rate (1,000 acfm)}}$$

reagent — any chemical compound, usually an alkali, used in the FGDS to either remove SO_2 by chemical reaction or to regenerate another chemical compound

reagent liquor/slurry — medium by which one or more reagents are added to an FGD process

Reagent Ratio, Inlet Basis (RRI) — normally used in wet scrubbing processes

$$\text{RRI} = \frac{\text{Moles of Reactive Alkali Added}}{\text{Moles of } SO_2 \text{ In}}$$

Reagent Ratio, Removal Basis (RRR) — normally used in spray drying processes

$$\text{RRR} = \frac{\text{Moles of Reactive Alkali Added}}{\text{Moles of } SO_2 \text{ Removed}}$$

reheat (stack gas) — heat addition process by which the outlet flue gas temperature of the absorber is increased

run — throughout this Code, the word "run" is applied only to a subdivision of the test. A run consists of a complete set of observations and recorded data taken at regular intervals, made for a period of time with the independent variables maintained constant

Copyright ASME International
Provided by IHS under license with ASME
No reproduction or networking permitted without license from IHS
Not for Resale

ASME PTC*40 91 ■ 0759670 0543021 610 ■

within the variations permitted by the parties to the test

slurry — mixture of liquid and suspended solids

standard conditions — defined as 68°F (20°C) for temperature and 29.92 in. Hg (760 mm Hg) for atmospheric pressure

steady state — condition of the system when transients (e.g., pressure, temperature, concentration, flowrate, etc.) in the system have dampened out and the system is in chemical and thermodynamic equilibrium

temperature, adiabatic saturation — for a given mixture of gas and vapor, temperature below which no more vapor can be added at specified conditions (partial pressure of vapor is equal to vapor pressure of the liquid at the gas–vapor mixture temperature)

temperature, approach to adiabatic saturation — difference between the actual temperature of a given gas–vapor mixture and the adiabatic saturation temperature of that gas–vapor mixture

test — throughout this Code the word "test" is applied only to the entire performance evaluation

waste — material generated in removing SO_2 from the FGDS, which has no commercial value, and which requires disposal

2.2 DESCRIPTIONS OF TERMS

2.2.1 Constant Terms. The terms shown in Table 2.1 are defined in three different sets of units. The International Metric System (SI) units are provided where applicable; and two systems commonly used by industry and testing personnel are also used: metric customary units (MC) and industry customary units (IC). These terms are used in para. 6.1 and elsewhere in this Code. Note that SI units are not provided for some terms where such units are impractical or inappropriate.

Some of the IC units are seemingly unusual combinations of other sets of units (e.g., water vapor condensation constant $K_1 = 4.707 \times 10^{-2}$ ft³/ml). These units arise from their use in analytical measurement devices and are the standard units used in the industry.

2.2.2 Variable Terms

The terms below are defined in three different sets of units, as described above. The MC or IC units are most commonly used in testing.

Copyright ASME International
Provided by IHS under license with ASME
No reproduction or networking permitted without license from IHS
Not for Resale

TABLE 2.1
CONSTANT SYMBOLS AND TERMS

Symbol	Description	Value and Units		
		SI	MC	IC
K_1	Water vapor condensation constant	1.33×10^3 m³/m³	1.333×10^{-3} m³/ml	4.707×10^{-2} ft³/ml
K_2	Silica gel water vapor constant	1335 m³/kg	1.335×10^{-3} m³/g	4.715×10^{-2} ft³/g
K_3	Ratio of standard temperature to standard pressure	5.139×10^1 K/N/m²	3.858×10^{-1} K/mmHg	1.764×10^1 R/in.Hg
K_4	Sulfate-to-SO_2 conversion	. . .	3.203×10^1 mg/meq	7.061×10^{-5} lbm/meq
K_5	Isokinetic equation constant	. . .	$0.003454 \frac{(\text{mmHg})\ (\text{m}^3)}{\text{ml-K}}$	$0.002669 \frac{(\text{in.Hg})\ (\text{ft}^3)}{\text{ml-R}}$
K_6	Volume conversion factor	. . .	1×10^{-6} ml/m³	7.48 gal/ft³
K_7	Mass-time correction factor	. . .	$60 \frac{\text{mg-min}}{\text{g-hr}}$	1.667×10^{-2} min/hr
K_p	Pitot tube calculation constant	. . .	$34.97 \frac{\text{m}}{\text{sec}} \left[\frac{\frac{\text{g}}{\text{g-mole}}\ (\text{mmHg})}{\text{K}\ (\text{mmH}_2\text{O})}\right]$	$8.549 \times 10^1 \frac{\text{ft}}{\text{sec}} \left[\frac{\frac{\text{lb}}{\text{lbm-mole}}\ (\text{in.Hg})}{\text{K(in. H}_2\text{O)}}\right]$
M_{SO_2}	Molecular weight of SO_2	6.4×10^1 kg/kg-mole	6.4×10^1 g/g-mole	6.4×10^1 lbm/lb-mole
M_w	Molecular weight of water	1.8×10^1 kg/kg-mole	1.8×10^1 g/g-mole	1.8×10^1 lbm/lb-mole
P_{std}	Standard absolute pressure	1.013×10^5 N/m²	7.60×10^2 mmHg	2.992×10^1 in.Hg
R	Ideal gas constant	$8.313 \times 10^{-3} \frac{\text{J}}{\text{(kg-mole)K}}$	$6.236 \times 10^{-2} \frac{(\text{mmHg})\text{m}^3}{\text{(g-mole)K}}$	$2.185 \times 10^1 \frac{(\text{in. Hg})\ \text{ft}^3}{\text{(lb-mole)R}}$
T_{std}	Standard absolute temperature	2.932×10^2 K	2.932×10^2 K	5.277×10^2 R
ρ_w	Density of water at standard temperature	9.982×10^2 kg/m³	9.982×10^{-1} g/ml	2.201×10^{-3} lbm/ml

Copyright ASME International
Provided by IHS under license with ASME
No reproduction or networking permitted without license from IHS Not for Resale

TABLE 2.2
VARIABLE TERMS

Symbol	Description	Value and Units		
		SI	MC	IC
A	Cross-sectional area of stack or duct	m^2	m^2	ft^2
A_n	Cross-sectional area of nozzle	m^2	m^2	ft^2
B_{ws}	Water vapor in the gas stream	percent (volume)	percent (volume)	percent (volume)
c_p	Average specific heat of gas or liquid at constant pressure	$\frac{J}{kg\text{-}K}$	$\frac{cal}{g\text{-}C}$	$\frac{Btu}{lbm\text{-}F}$
C_p	Pitot tube coefficient	(dimensionless)	(dimensionless)	(dimensionless)
C_{SO_2}	SO_2 (including SO_3) concentration, dry basis at standard conditions	kg/m^3	mg/dsm^3	lbm/dscf
G_{SO_2}	Mass emission rate of SO_2	kg/s	g/min	lbm/min
ΔH	Average pressure drop across orifice meter	N/m^2	mm H_2O	in. H_2O
I	Percent isokinetic sampling	percent	percent	percent
kWh	Total kilowatt hours used during sample time	W_s	kWhr	kWhr
L_f	Final level of the reagent tank at the end of the FGD run	m	m	ft
L_i	Initial level of the reagent tank at the start of the FGD run	m	m	ft
M_s	Molecular weight of gas, wet basis	$\frac{kg}{kg\text{-}mole}$	$\frac{g}{g\text{-}mole}$	$\frac{lbm}{lb\text{-}mole}$
M_d	Molecular weight of gas, dry basis	$\frac{kg}{kg\text{-}mole}$	$\frac{g}{g\text{-}mole}$	$\frac{lbm}{lb\text{-}mole}$
M_r	Molecular weight of reagent r	$\frac{kg}{kg\text{-}mole}$	$\frac{g}{g\text{-}mole}$	$\frac{lbm}{lb\text{-}mole}$
M_{rt}	Average total molecular weight of the reagent mixture	$\frac{kg}{kg\text{-}mole}$	$\frac{g}{g\text{-}mole}$	$\frac{lbm}{lb\text{-}mole}$
m	Total average flow rate for the sample time	kg/s	kg/hr	lb/hr
N	Normality of barium perchlorate titrant	. . .	meq/ml	meq/ml
ΔP	Velocity head of gas	N/m^2	mm H_2O	in. Hg
P_{bar}	Barometric pressure (at time of test)	N/m^2	mm Hg	in. Hg
P_g	Absolute flue gas pressure at sample point	N/m^2	mm Hg	in. Hg
P_m	Absolute pressure at meter	N/m^2	mm Hg	in. Hg
P_s	Absolute gas pressure	N/m^2	mm Hg	in. Hg

Copyright ASME International
Provided by IHS under license with ASME
No reproduction or networking permitted without license from IHS
Not for Resale

TABLE 2.2 VARIABLE TERMS (CONT'D.)

Symbol	Description	Value and Units		
		SI	MC	IC
ρ_s	Density of the reagent liquor/slurry as analyzed	kg/m³	g/m³	lbm/gal
%r	Average weight percentage of reagent r in the reagent liquor/slurry analyses for any particular FGDS run	percent	percent	percent
%CO	Percent CO by volume, dry basis	percent	percent	percent
$\%CO_2$	Percent CO_2 by volume, dry basis	percent	percent	percent
$\%N_2$	Percent N_2 by volume, dry basis	percent	percent	percent
$\%O_2$	Percent O_2 by volume, dry basis	percent	percent	percent
%R	Percent SO_2 removal	percent	percent	percent
Q_{sd}	Dry volumetric stack gas flow rate corrected to standard conditions	m³/s	dsm³/hr	dscf/hr
G_r	Average reagent flow rate during any particular FGDS run for reagent r	kg-mole / s	g-mole / min	lb-mole / min
G_{rt}	Average total flow rate of all reagents into the FGDS during any particular FGDS run	kg-mole / s	g-mole / min	lb-mole / min
G_s	Average mass flow rate of reagent corrected for purity	kg/s	g/min	lbm/min
Q_s	Average volumetric flow rate of reagent liquor/slurry discharged into the FGDS during any particular FGDS run	m³/s	m³/min	gal/min
t	Duration of any particular FGDS run	s	min	min
T_G	Absolute average flue gas temperature at sample point	K	K	R
T_i	Inlet stream absolute temperature	K	K	R
T_m	Absolute temperature at meter	K	K	R
T_o	Outlet stream absolute temperature	K	K	R
T_s	Absolute gas temperature	K	K	R
V_a	Volume of sample aliquot titrated	m³	ml	ml
V_f	Final volume of condenser water	m³	ml	ml

Copyright ASME International
Provided by IHS under license with ASME
No reproduction or networking permitted without license from IHS Not for Resale

TABLE 2.2 VARIABLE TERMS (CONT'D.)

Symbol	Description	Value and Units SI	MC	IC
V_i	Initial volume of condenser water	m^3	ml	ml
V_{lc}	Volume of liquid collected in impingers and silica gel	m^3	ml	ml
V_m	Dry gas volume measured by meter	m^3	m^3	ft^3
$V_{m(std)}$	Dry gas volume at standard conditions	m^3	dsm^3	dscf
ΔV_m	Incremental gas volume at each traverse point	m^3	m^3	ft^3
V_{soln}	Total volume of solution in which SO_2 sample is contained	. . .	ml	ml
V_T	Volume of the reagent tank per foot of tank height	m^3/m	m^3/m	gal/ft
V_t	Volume of barium perchlorate titrant used for the sample	. . .	ml	ml
V_{tb}	Volume of barium perchlorate titrant used for the blank	. . .	ml	ml
$V_{wc(std)}$	Volume of water vapor condensed corrected to standard conditions	m^3	sm^3	scf
$V_{wsg(std)}$	Volume of water vapor collected in silica gel at standard conditions	m^3	sm^3	scf
v_s	Average gas velocity	m/s	m/s	ft/s
W_i	Initial silica gel plus impinger weight	kg	g	g
W_f	Final silica gel plus impinger weight	kg	g	g
Y	Dry gas calibration factor	. . .	(dimensionless)	. . .
t_T	Total sampling time	s	min	min
q	Heat input	J/s	cal/s	Btu/hr
h_i	Enthalpy of heating fluid at inlet to heat exchanger	J/g	cal/g	Btu/lbm
h_o	Enthalpy of heating fluid at outlet of heat exchanger	J/g	cal/g	Btu/lbm

Copyright ASME International
Provided by IHS under license with ASME
No reproduction or networking permitted without license from IHS
Not for Resale

SECTION 3 – GUIDING PRINCIPLES

3.1 General

Adherence to this Code is recommended to insure the likelihood of credible results. However, site-specific considerations may make rigorous application of this Code unrealistic or impractical. Compromises to this Code should be made only after careful consideration of the impact on data validity and of the requirements of the parties to the test. All parties shall agree in writing to any such changes. All reported results shall clearly state all variations from the recommendations and requirements of this Code.

3.2 Representatives to the Test

All parties to the test should authorize knowledgeable representatives to be present to verify that the test is conducted in accordance with this Code and its associated written agreements. The parties to the test may mutually designate a party to direct the test and/or serve as arbitrator in the event of a dispute.

3.3 Test Plan

An overall test plan, including detailed test procedures shall be written and approved by all parties to the test. It is important that all parties to the test investigate the field conditions thoroughly before making arrangements for conducting the test.

3.4 Preliminary Runs

One or more preliminary runs may be conducted for the purpose of:

(a) checking instruments;

(b) training personnel; and

(c) making adjustments, the need of which was not evident during preparation for the test.

Any preliminary run, when completed, may be declared by written mutual agreement to be an official run.

3.5 Items of Agreement

The following is a list of items upon which agreement shall be reached by the parties prior to the test. They are listed here for check purposes only.

(a) Object of the test, including establishment of the FGDS boundary (see Appendix E)

(b) Procedures for interpretation of test results

(c) Date and time of making the test

(d) Responsibilities of test personnel

(e) Calibration requirements for all test equipment (including accuracy and precision)

(f) Number, type, and location of sample or test points for each item to be sampled or tested

(g) Instrumentation and method (test procedure) for acquiring samples

(h) Selection of laboratory, laboratory procedures, laboratory instrumentation, and/or methods (primary and secondary) of samples which may include:

(1) reagent liquor/slurry

(2) recirculation liquor/slurry

(3) waste/by-product

(4) water

(5) reagent

(6) fuel

(i) Selection of sampling procedure, preparation, shipment, and storage.

(j) Method and criteria for determining steady-state operating conditions prior to and during testing (including identification of critical operating parameters and allowable variations in each; see para. 3.6)

(k) Number and duration of runs

(l) Period of time between runs

(m) Period of time in which all runs will be completed

(n) Method for determining FGDS loading (e.g., flue gas flow)

(o) FGDS loading (e.g., system capacity) at which test runs are to be made

(p) Process instrumentation to be used (including secondary methods of measurement for verification of primary instrumentation)

(q) Method of recording data

(r) Variables requiring continuous monitoring

Copyright ASME International
Provided by IHS under license with ASME
No reproduction or networking permitted without license from IHS
Not for Resale

ASME PTC*40 91 ■ 0759670 0543027 039 ■

(s) Identification of all reagent streams to be measured shall be identified

(t) Frequency of data acquisition (for variables using intermittent monitoring)

(u) Correction curves for deviation of process parameters from design. The following are examples of correction curves which may be necessary:

(1) alkalinity vs SO_2 removal efficiency;

(2) flue gas pressure drops vs flue gas flow rate.

3.6 Steady State

Testing under this Code is to be performed under steady state conditions and determination of these conditions is critical to the success of the tests. Parameters that are important in establishing steady state conditions, and the means by which the parties will establish whether steady state conditions have been achieved, shall be mutually agreed upon in writing by the parties to the test, along with minimum time periods necessary to establish steady state. These parameters include, but are not limited to, gas flow, inlet SO_2 concentration, pH, percent solids, solid and liquid composition, etc. The allowable variations in each of these parameters shall also be included in this agreement. Any test run in which the data falls outside these allowable variations will be declared invalid and will be repeated. A minimum of three data points within the allowable variation established for each agreed-upon parameter is necessary to establish steady state.

3.7 Condition of Equipment

Satisfactory working order of all equipment (both test equipment and equipment being tested) shall be verified before *and* after the run(s). Equipment which is not operating properly shall be identified and the possible effects of any such defects shall be considered. The parties shall agree in writing to either suspend the testing until corrective measures have been completed, or continue the test and state in the test report the effect of the malfunctioning equipment on the test.

3.8 Number and Duration of Runs

The number and duration of runs should be determined by the operating considerations and the requirements of the parties. As a minimum, three runs shall be made. To obtain statistically credible data, however, nine or more runs should be performed. More than nine runs may be performed and then, at the discretion of the parties to the test, up to three runs may be rejected so long as the total number of runs used to determine performance is at least nine.

The length of the flow measurement and composition sampling runs should be a minimum of eight hours. The duration of energy/power input runs may be longer to permit time averaging.

The duration of the electrical power runs should be 24 hours, but never less than 12 hours, to account for those devices which are in intermittent use. Thermal and pressure runs may be considerably shorter as large swings in these measurements rarely happen. The minimum duration for either a pressure or thermal measurement shall be two hours. The recommended duration is 24 hours.

3.9 Frequency of Readings

Continous monitoring and recording shall be provided as mutually agreed upon. Intermittent data acquisition will require a minimum of three readings for each data point for each run. These readings shall be taken in a mutually agreed period of time.

Flow measurements and composition samples should be taken concurrently for the duration of the run. Energy/power inputs may be time-averaged over longer periods to account for those devices which have intermittent duty cycles.

3.10 Analyzing the Results

Whenever possible, analysis of the samples and measured data should be completed the same day, so as to alert all parties to errors or irregularities in the testing. Due consideration should be given to the effect of time on all samples (e.g., liquid-chemistry changes with time and temperature following sampling). Detailed concerns and restrictions are discussed in Section 4.

3.11 Chemical Analysis

Depending on the FGDS, the reagent to be analyzed will vary. Standard analytical methods of chemical analysis will be employed to determine the active reagent concentration in each sample. All other active SO_2 removal agents present shall also be analyzed and quantitatively reported, as described in Section 4.

Copyright ASME International
Provided by IHS under license with ASME
No reproduction or networking permitted without license from IHS
Not for Resale

ASME PTC*40 91 ■ 0759670 0543028 T75 ■

3.12 Uncertainties

This Code does not include consideration of the *uses* of uncertainties. These are commercial considerations outside the scope of this Code. The test results shall be reported as computed from the test observations, only calibrations having been applied. Some measurements may be subject to appreciable error. The expected limits are stated, where possible, in Section 4. These and other allowances for errors of measurement are permissible, provided they are clearly stated in the test report. Their combined plus-or-minus value, i.e., the uncertainty, shall be taken as the square root of the sum of the squares of the percentage effects of the various limits of error on the results of the test. Whenever allowances for possible errors of measurement are taken into consideration, the reported test results shall be qualified by the statement that the results may be regarded as correct within a given plus-or-minus percentage, this value having been determined in accordance with the foregoing method for computing uncertainties (see PTC 19.1 Measurement Uncertainty).

3.13 References

Unless otherwise specified, all references to other codes refer to ASME Performance Test Codes.

3.14 Special Data

The determination of special data outside the scope of this Code shall be made only with the written agreement of both parties to the test regarding methods of measurement and computation, all of which shall be completely described in the test report.

Copyright ASME International
Provided by IHS under license with ASME
No reproduction or networking permitted without license from IHS
Not for Resale

SECTION 4 — INSTRUMENTS AND METHODS OF MEASUREMENT

4.1 Results To Be Determined

The following results are to be determined as a part of the performance test code:

(a) percent SO_2 removal (%R)

(b) Reagent Ratio (RRI or RRR)

$$\text{RRI} = \text{Reagent Ratio In} = \frac{\text{Moles of Reagent}}{\text{Moles of } SO_2 \text{ In}}$$

$$\text{RRR} = \text{Reagent Ratio Removed} = \frac{\text{Moles of Reagent}}{\text{Moles of } SO_2 \text{ Removed}}$$

(c) energy/power consumption

(d) water consumption and characterization

(e) reagent consumption and characterization

(f) waste/by-product production and characterization

4.2 Methods of Measurement

This Subsection is in separate divisions, each addressing the measurement of a specific process stream to determine the required component.

(a) flue gas stream (see para. 4.2.1)

(b) reagent (see para. 4.2.2)

(c) energy/power (see para. 4.2.3)

(d) water (see para. 4.2.4)

(e) waste/by-product (see para. 4.2.5)

4.2.1 Flue Gas. It is possible that FGDS performance tests may be combined with regulatory compliance tests. In this case, the parties to the test should contact the regulatory agency and determine what test modifications, if any, may be required.

(a) SO_2 Removal. Percent SO_2 removal is defined by Eq. (5.12).

(b) SO_2 Concentration

(1) Recommended Method — The recommended method for determining SO_2 concentrations and mass flowrates is Method PTC 40 as described in Appendix B of this Code. Method PTC 40 is a combination of modified EPA Methods 6 and 8 for SO_2 removal and Methods 1 through 5 for removal of particulates. The principle of this method is the simultaneous collection of particulate matter and the SO_2 gaseous sample by extraction of a known quantity of emission gas from the stack or duct gas stream. The method describes sampling equipment, including an out-of-stack heated filter followed by an impinger SO_2 and SO_3 (reported as SO_2) collection system. The method also requires a multipoint traverse of the stack or duct during sampling in order to account for particulate matter and SO_2 stratification that can occur in FGDS inlet and outlet sampling locations.

This Code does not include a discussion of the role of SO_3 in FGDS testing. This compound does not play a major distinct role because of its reactivity in the presence of water and the relatively much greater abundance of SO_2 under normal testing conditions.

For further discussion, see PTC 19.10 on Flue and Exhaust Gas Analysis.

(2) Alternate Methods — SO_2 concentrations may also be determined by EPA Methods 6, 6A, 6B, or 8.

(3) Continuous Emission Monitoring Systems (CEMS) — The continuous emission monitoring system for measuring SO_2, O_2, and CO_2 may be used to determine SO_2 concentration or emission rate in pounds of SO_2 per million Btu. The CEMS shall be subjected to rigorous quality assurance and quality control measures, including certification as per EPA Performance Specifications 2 and 3 of 40 CFR Part 60, within 90 days prior to the start of the test. Daily, or more frequent instrument drift determinations, and a repeat of the relative accuracy tests following the evaluation of the FGDS data collection shall be done. It is recommended that the averaging time per run be not less than 24 hours, and that at least 22 of the 24 hourly averages be available for each run based on a minimum of four measurement values per hour.

(c) SO_2 Mass Flowrate. Mass flowrate (lbm/hr) of

Copyright ASME International
Provided by IHS under license with ASME
No reproduction or networking permitted without license from IHS
Not for Resale

ASME PTC*40 91 ■ 0759670 0543030 623 ■

SO_2 at the inlet to, and outlet from, the FGDS may be determined by application of EPA Methods 1 and 2. Other methods may be used and may be beneficial under certain circumstances. Agreement by parties to the test is necessary.

Mass flowrate (lbm/hr) of SO_2 at the inlet and at the outlet may be determined by combining the data from paras. 4.2.1 (b), (d), and (e) (see para. 5.1).

(d) O_2 and CO_2 Measurements. EPA Method 3 or ASME PTC 19.10 may be used for determination of O_2 and CO_2 where a CEMS is not available.

(e) Moisture Measurements. EPA Method 4 may be used to determine the moisture content of the flue gas at the FGDS inlet and outlet.

(f) Test Timing and Duration. Test measurements at the FGDS inlet and outlet for each run shall be coincident, of equal time duration, and subject to agreement by parties to the test.

(g) Fuel Analyses. Fuel analysis data may not be used as the sole determinant of FGDS inlet SO_2 concentration. Sulfur content analysis and appropriate combustion calculations can provide valuable background information for interpretation of other required measurement data, but such results alone are not adequate for FGDS evaluations as described in this Code.

(h) Uncertainties. The uncertainties of the recommended PTC 40 Method are as follows (see References, reference 7):

(1) velocity: ±5%
(2) volumetric flowrate: ±5.6%
(3) particulate matter: ±12.1%
(4) SO_2: ±5.8%

4.2.2 Reagent(s)

(a) Items To Be Included as Reagent(s)

(1) Any alkali or reagent addition introduced separately into the system. Such alkali addition shall be that which is separate from the flue gas stream.

(2) Any SO_2 removal secondary chemical flow necessary to regenerate the primary reagent(s).

(3) Any SO_2 removal performance improving additives.

(b) Items Not Included as a Reagent Flow

(1) Chemicals added to aid in the FGD process but which do not result in increased SO_2 removal (such as flocculant as used in a thickener).

(2) Chemicals added to improve process water quality but which do not increase SO_2 removal.

(3) Fly ash alkalinity may be of interest in some processes and may warrant quantification.

(c) Flow Measurement. The quantity of reagent used during the performance test shall be based on either a reagent tank level drop or direct flow recording.

(1) Level Drop. Where the FGDS contains a tank for storage or dilution of reagent or reagent liquor/slurry, prior to system introduction, this tank should be isolated during the run and the tank level recorded at the start and the conclusion of the run. Non-isolable seal water dilution is permitted if the liquor/slurry sample is taken before dilution occurs.

Level measurement can be done by calibrated instrumentation or by manual techniques depending on tank configuration and slurry type. Reagent consumption measurement for FGDS can be accurately measured by change in level if and only if the process is at steady state. Measurement of change in level should be a direct physical measurement. The limitations of the measurement device(s) should be well-known before using this method. It is expected that the measurement uncertainty will be within 1% for this method. Mutual agreement by all parties must be secured for the method employed.

It is assumed that the tank used for such flow measurement contains reagent liquor/slurry in its final form. All dilutions should be conducted before the tank is isolated for the test run. Where sufficient reagent storage is not available to allow the tank to operate during the entire run without additional reagent makeup to the tank, quantity measurement shall be by volumetric flow. If isolation of the tank cannot be obtained during system operation, then quantity measurement shall be by volumetric flow, as described in para. 4.2.2 (c)*(3), Volumetric Flow.*

(2) Dry Mass and Volumetric Flow. Solid reagent flow measurement may use dry mass flow measuring devices, or may be by volumetric flow. It is expected that the measurement uncertainty for dry mass flow measuring devices will be within 2%.

The accuracy of dry volumetric flow measurement will depend on specific conditions such as reagent type and degree of aeration. A detailed discussion of the difficulties with this method is presented in Appendix D of this Code.

(3) Volumetric Flow. Existing flow meters in the FGDS to monitor flow rates of reagents into the FGDS may be used if agreed to by all parties involved in the test or if the level drop method is impractical. Differential pressure meters shall be constructed in conformance with PTC 19.5 and "Fluid Meters," Sixth Edition. Meters not covered in these documents, and agreed for use by the parties to the test, shall be installed and calibrated in accordance with manufacturer's recommendations.

It is expected that the uncertainty for volumetric

Copyright ASME International
Provided by IHS under license with ASME
No reproduction or networking permitted without license from IHS
Not for Resale

ASME PTC*40 91 ■ 0759670 0543031 56T ■

flow measurement will be within 2%.

Volumetric flow measurements shall be recorded at intervals of not longer than five minutes, shall be totalized, and (where possible) continuously recorded.

(d) Chemical Analysis. Principal constituents to be determined in the reagent liquor/slurry may include, but are not limited to, the following:

- CaO
- $Ca(OH)_2$
- $Mg(OH)_2$
- Na_2CO_3
- Na OH
- MgO
- $CaCO_3$
- $MgCO_3$
- $NaHCO_3$

The reagent or reagent liquor/slurry shall be analyzed to determine the weight percent of the sample represented by each constituent reagent compound. Also included in such analysis may be specific reagents particular to a system, including performance additives. Density of any reagent should also be determined.

Where applicable, the primary analytical methods for these constituents will be as described in EPRI Publication CS-3612 (latest amended version and supplements) "FGD Chemistry and Analytical Methods, Volume I and II." Analytical methods not described by the above shall follow "Standard Methods for the Examination of Water and Waste Water" (latest edition), published by the American Public Health Association, as well as the Standard Methods published by the American Society for Testing and Materials.

Measurement uncertainty for the chemical analyses are included as part of the referenced analytical methods.

Methods of analysis and calculation for constituent-compound reporting not described in the above documents are subject to agreement by parties to the test.

(e) Parameters Of Interest. Other parameters which may be of interest in the FGDS process, may include but are not limited to, the following:

- pH
- reagent liquor/ slurry temperature
- organic acids
- alkalinity
- reagent grindability
- catalyst
- reactivity
- weight percent of solids

Methods of determination for the above parameters shall be by methods referenced in para. 4.2.2 *(d), Chemical Analysis.*

4.2.3 Energy/Power Consumption

(a) Introduction

(1) Inputs To Be Included. The energy/power inputs to the FGDS that will be tested will be electrical, thermal, and mechanical energies.

(2) Inputs Not To Be Included. All non-process energy/power loads should be excluded from this test. Examples of non-process loads may include lighting, heating, ventilating, air conditioning, cranes, elevators (if applicable), etc.

(3) Optional Inputs. Potential and kinetic energy/power effects of both gas and liquid streams may be neglected if agreed to by the parties to the test. Chemical heats of reaction may also be treated similarly.

(4) Measurement Duration. All measurements should be made over a period of 24 hours, and then time averaged to account for those devices which have intermittent duty cycles.

(b) Principal Electrical Energy/Power Devices. Devices for which energy/power consumption should be measured may include, but are not limited to, the following:

- material-handling systems
- pumps
- blowers
- feed preparation systems
- waste/by-product systems
- fans (dedicated to FGD)
- agitators

(1) Measurement Methods

(a) During performance testing, shut off all loads deemed to be non-process and attach calibrated watt-hour meters or recording watt meters on the FGDS energy/power supply. For non-process loads which cannot be shut off during testing, connect calibrated watt-hour meters or recording watt meters to equipment power supply (see para. 4.2.3 *(a)(2), Inputs Not To Be Included.*

(b) Connect calibrated watt-hour meters or recording watt meters to non-process loads and the FGDS electrical supply. After the run, deduct the energy values indicated by the non-process watt-hour meters or recording watt meters from the values obtained from the FGDS electrical supply for the same period of time. However, in order to achieve this practically, it may be necessary to separate the electrical feed to process and non-process equipment.

It is expected that the measurement uncertainty for the calibrated meters will be within 1%.

(2) Conformance With Other Codes. The electrical test shall be in accordance with applicable ASME

Copyright ASME International
Provided by IHS under license with ASME
No reproduction or networking permitted without license from IHS
Not for Resale

ASME PTC*40 91 ■ 0759670 0543032 4T6 ■

or IEEE codes. (See IEEE Standard 120 on Electrical Measurements).

(c) Principal Thermal Energy/Power Consideration/ Devices

(1) Thermal Energy/Power, also frequently referred to as heat energy in the context of FGD, is defined as the heat added to the FGDS to sustain a condition which is required by the process design.

(2) Typically, thermal energy/power requirements include, but are not limited to, flue gas reheat and seal or purge air heat.

(3) Sources of thermal energy/power include, but are not limited to, hot air, hot water, steam, hot fluids, and fuels.

(d) Measurement Methods

(1) If thermal heating is accomplished by direct fuel firing, thermal energy/power is obtained by measuring the quantity and heat content of the fuel.

(2) If heating is accomplished by a medium other than fuel, thermal energy/power will be determined by measuring the difference between the heat inputs and outputs of the heating media. The heat inputs and outputs are based on the measured flow, temperature, and pressure of the heating media. Flows are measured in accordance with para. 4.2.2 *(c), Flow Measurement*. Temperatures and pressures are measured in accordance with PTC 19.3 on Temperature Measurement and PTC 19.2 on Pressure Measurement, respectively.

The thermal properties of the heating media should be evaluated in accordance with the latest edition of the ASME Steam Tables if steam or hot water are used. If a heating medium other than steam or hot water is used, the reference for the medium's thermal properties shall be agreed to by the parties to the test.

(e) Principal Mechanical Energy/Power Considerations/Devices. Mechanical energy/power consumption is usually manifested by pressure drop resulting from gas and liquid flow through the FGDS. The gas and liquid flowrates, and hence the pressure drops, are governed by the steam generator load and the FGDS design considerations. The principal pressure drop value of interest is typically that of the flue gas. However, in some instances the pressure drop in water and slurry lines will also be of interest.

Mechanical energy/power consumption is directly related to the product of the fluid (gas or liquid) flowrate, and the total pressure (static + velocity head) drop across the device. However, equipment performance guarantees are usually expressed as pressure drop at a specific flowrate. Measured flowrates are seldom exactly those at which the guarantees are based. Therefore, flowrate-versus-pressure-drop correction curves which are agreeable to all parties to the test may be established to permit determination of compliance at other-than-design flowrates.

(1) Measurement Methods. Gas and liquid flows are measured in accordance with paras. 4.2.1 *(b), SO_2 Concentration* and 4.2.2 *(c), Flow Measurement,* respectively.

All pressure measurements are made in accordance with ASME PTC 19.2. Because of flow separation and large scale turbulent gas flow conditions in large gas ducts, the total pressure should be measured at several locations in ducts. These points should be selected in accordance with para. B.4.1*(b), Preliminary Determinations* of this Code.

4.2.4 Water. Flow measurement and analysis of water inputs to the FGDS may be required depending on the boundaries chosen. Effluent from the FGDS will be considered in para. 4.2.5, *Waste/By-product*. Listed below are constituents and characteristics which may be of interest.

- Calcium
- Sodium
- Chloride
- "P" Alkalinity
- Sulfites
- Total phosphate
- pH
- Total suspended solids
- Magnesium
- Potassium
- Sulfate
- "M" Alkalinity
- Thiosulfates
- Ortho phosphate
- Carbonates
- Total dissolved solids

(a) Measurement Methods. Flow measurement shall be determined as indicated in para. 4.2.2 *(c)(3), Volumetric Flow.*

The analytical methods shall be as described in para. 4.2.2 *(d), Chemical Analysis.*

4.2.5 Waste/By-product. Flow measurement and analysis of waste/by-product may be required depending on the boundaries chosen for the FGDS. Results can provide information on the evaluation of FGDS operation and on the evaluation of disposal requirements. Listed below are constituents and other parameters which may be of interest.

- Iron
- Copper
- Zinc
- Nickel
- Aluminum
- Lead
- Chromium
- Calcium
- Magnesium
- Fluoride
- Sulfite
- Sulfur
- Chloride
- Silica
- Arsenic
- Mercury
- Silver
- Sodium

Copyright ASME International
Provided by IHS under license with ASME
No reproduction or networking permitted without license from IHS
Not for Resale

ASME PTC*40 91 ■ 0759670 0543033 332 ■

- Nitrate
- Nitrite
- Phosphate
- Carbonate
- Sulfate

(a) Measurement Methods

(1) Liquid flow measurement shall be determined as indicated in para. 4.2.2 *(c), Flow Measurement.* The analytical methods shall be as described in para. 4.2.2 *(d), Chemical Analysis.*

(2) Solid flow measurement may be by any of the following methods or by combining any of the following methods.

(a) Direct measurement (e.g., weigh belts, weigh hoppers, load cells or storage tanks, or beam gages which measure strain as a function of stress or load applied).

It is expected that the measurement uncertainty for this method will be within 2%.

(b) Bulk density in silos, bins, or similar storage facilities. This method is only an approximation. Care should be exercised in keeping the solids from compacting in storage (see Appendix D of this Code).

(b) Physical Characteristics. The physical characteristics of waste or by-product may include, but are not limited to, flowrate, solids content, and density. Measurement procedures that require definition include sampling and analysis for particulate and dissolved matter. Measurement procedures as referenced above shall be used.

Additional characteristics which may be of interest include, but may not be limited to, the following:

(1) permeability
(2) particle size
(3) unconfined compressive strength
(4) specific surface (Blaine)
(5) leachability
(6) chemical oxygen demand

Testing for these characteristics is outside of the scope of this Code. However, suitable methods which address these characteristics are published by ASTM.

Copyright ASME International
Provided by IHS under license with ASME
No reproduction or networking permitted without license from IHS
Not for Resale

SECTION 5[1] — COMPUTATION OF RESULTS[2]

5.1 Calculation of Percent SO_2 Removal (%R)

5.1.1 Calculation of Flue Gas Flowrate (Q_{sd})

(a) Water-vapor concentration is determined using Method PTC 40. Examples of forms for data collections are shown in Appendix C.

(1) Volume of water vapor condensed

$$V_{wc(std)} = \frac{(V_f - V_i)\,\rho_w\,R\,T_{std}}{P_{std}\,M_w} = K_1\,(V_f - V_i) \tag{5.1}$$

(2) Volume of water vapor collected in silica gel

$$V_{wsg(std)} = \frac{(W_f - W_i)\,R\,T_{std}}{P_{std}\,M_w} = K_2\,(W_f - W_i) \tag{5.2}$$

(3) Sample gas volume

$$V_m\,(std) = (V_m Y)\left(\frac{T_{std}}{T_m}\right)\left(\frac{P_{bar} + \frac{\Delta H}{13.6}}{P_{std}}\right) = K_3\,V_m\,Y\left(\frac{P_{bar} + \frac{\Delta H}{13.6}}{T_m}\right) \tag{5.3}$$

(4) Water vapor concentration

$$B_{wa} = \frac{V_{wc(std)} + V_{wsg(std)}}{V_{wc(std)} + V_{wsg(std)} + V_{m(std)}} \tag{5.4}$$

(b) Flue Gas Molecular Weight. Flue gas molecular weight is determined using Method PTC 40.

(1) Dry flue gas molecular weight

$$M_d = 0.440\,(\%CO_2) + 0.320\,(\%O_2) + 0.280\,(\%N_2 + \%CO) \tag{5.5}$$

---

[1]See Section 2 for definitions and descriptions of terms.

[2]If para 4.2.1 (c), *SO_2 Mass Flowrate* is used instead of Method PTC 40, suitable adjustments to the calculations will be required and are to be agreed to by the parties to the test.

Copyright ASME International
Provided by IHS under license with ASME
No reproduction or networking permitted without license from IHS
Not for Resale

(2) Actual or wet flue gas molecular weight

$$M_a = M_d (1 - B_{wa}) + 18.0\, B_{wa} \tag{5.6}$$

(c) Flue Gas Volumetric Flowrate. Flue gas volumetric flowrate is determined using Method PTC 40. The data as recorded on Fig. C.3 are used in the following equations:

(1) Average flue gas velocity

If the equation for absolute gas pressure is

$$P_g = P_s = P_{bar} + \frac{\text{Static Pressure}}{13.6} \tag{5.7}$$

(this equation is valid for both metric and industry customary units), then

$$v_s = K_p C_p (\sqrt{\Delta P})_{avg} \left[\frac{T_{s(avg)}}{P_s M_a}\right]^{1/2} \tag{5.8}$$

(2) Average, dry, flue gas, volumetric flowrate

$$Q_{sd} = (3600 \text{ sec/hr})(1 - B_{wa})\, v_s A \left[\frac{T_{std}}{T_{s(avg)}}\right] \left[\frac{P_s}{P_{std}}\right] \tag{5.9}$$

5.1.2 Calculation of SO_2 Concentration. SO_2 concentration is determined using Method PTC 40 or CEMS.

For determination of SO_2 concentration using Method PTC 40, the data as recorded on Figs. C.4 and C.5 are used in the following equations:

(a) Sample gas volume - Same as Eq. (5.3)

(b) SO_2 concentration

$$C_{SO_2} = K_4 N \frac{(V_t - V_{tb}) \dfrac{V_{soln}}{V_a}}{V_{m(std)}} \tag{5.10}$$

5.1.3 Calculation of SO_2 Mass Flowrate. SO_2 mass flowrate is determined using results of paras. 5.1.1 and 5.1.2 and the following equation:

$$G_{SO_2} = \frac{C_{SO_2} Q_{sd}}{K_7} \tag{5.11}$$

5.1.4 Calculation of SO_2 Removal. Percent SO_2 removal is determined using results for inlet and outlet SO_2 mass flowrates as calculated in para. 5.1.3 and the following equation:

$$\%R = \frac{G_{SO_2}\,(\text{entering}) - G_{SO_2}\,(\text{exiting})}{G_{SO_2}\,(\text{entering})}\, 100 \tag{5.12}$$

5.2 Calculation of Reagent Flowrate

5.2.1 Units. Results are to be expressed in lb-moles (gram-moles) of reagent required per minute (G_r) to maintain the measured SO_2 removed as determined during the FGDS performance test.

Copyright ASME International
Provided by IHS under license with ASME
No reproduction or networking permitted without license from IHS Not for Resale

5.2.2 Reagent Liquor/Slurry Flowrate. The first step in determining the individual reagent flow rate is to calculate the reagent liquor/slurry flowrate Q_s. For the level drop method, the Q_s is calculated as follows:

$$Q_s = \frac{(L_i - L_f)\, V_T}{t_T} \tag{5.13}$$

For mass or volumetric flow measurements, the recorded flowrates should be averaged for the duration of the run.

5.2.3 Calculation of Individual Reagent Flowrate. Individual reagent flowrate is computed from the average reagent analysis taken during each run for the individual reagent (r), expressed as a weight percentage by the following relationship:

$$G_r = \frac{Q_s(\%r)\, \rho_s}{M_r} \tag{5.14}$$

For devices which measure mass directly, the average reagent flow is expressed as

$$G_r = \frac{G_s}{M_r} \tag{5.15}$$

5.2.4 Calculation of Total Reagent Flowrate. Total reagent flowrate is the sum of the individual reagent flowrates. For example, reagent flowrates for reagents r_1, r_2, and r_3 can be added together as follows:

$$G_{rt} = G_{r1} + G_{r2} + G_{r3} \tag{5.16}$$

The total reagent flowrate G_{rt} represents the total alkali content available to FGDS for chemical reaction.

5.3 CALCULATION OF ENERGY/POWER CONSUMPTION

5.3.1 Calculation of Thermal Energy/Power

(a) Heating Media Other Than Fuel. If a heating medium other than fuel is used, the calculation of thermal energy/power is of the following form:

$$q = m(h_i - h_o) \tag{5.17}$$

The inlet and outlet enthalpies of the heating fluid are calculated from reference properties (e.g., ASME Steam Tables) based on the measured temperature and pressure of the fluid.

(b) Fuel. If a fuel is used to accomplish heating, the calculation used shall be in accordance with PTC 3.1 on Diesel and Burner Fuels, 3.2 on Solid Fuels, and 3.3 on Gaseous Fuels, as applicable.

5.3.2 Calculation of Mechanical Energy/Power. Mechanical energy/power may be expressed as either pressure drop at a measured flowrate or in horsepower (HP).

(a) Gas Phase. When dealing with gas flow, mechanical energy/power is calculated in one of the following manners. In both cases, when multiple total pressure values are measured across the cross section of large ducts, the total pressure used in the calculation should be the average of the measured values. See PTC 21 on Particulate Matter Collection Equipment for detailed analysis of gas phase pressure drop measurement.

Copyright ASME International
Provided by IHS under license with ASME
No reproduction or networking permitted without license from IHS Not for Resale

(1) Pressure Drop at a Measured Gas Flowrate.

$$\text{Total Pressure Drop } (in.H_2O) = [\text{Total Pressure } (in.H_2O)]_{in} - [\text{Total Pressure } (in.H_2O)]_{out} \quad (5.18)$$

The gas flowrate used as reference for this pressure drop should be the inlet gas flow.

(2) Horsepower

$$HP_{Gas} = (1/6356)\left\{[\text{Gas Flow (acfm)} \times \text{Total Pressure (in water)}]_{in} - [\text{Gas Flow (acfm)} \times \text{Total Pressure (in water)}]_{out}\right\} \quad (5.19)$$

(b) Liquid Phase. When dealing with liquid flow, mechanical energy/power is calculated in one of the following ways:

(1) Pressure Drop at a Measured Liquid Flowrate

$$\text{Total Pressure Drop} = [\text{Total Pressure (ft } H_2O)]_{in} - [\text{Total Pressure (ft } H_2O)]_{out} \quad (5.20)$$

(2) Horsepower

$$HP_L = \frac{SG_l\ (\text{lbm/gal})}{3960}\left\{[\text{Liquid Flow (gpm)} \times \text{Total Pressure (ft water)}]_{in} - [\text{Liquid Flow (gpm)} \times \text{Total Pressure (ft water)}]_{out}\right\} \quad (5.21)$$

where SG_l = Specific gravity of liquid

5.3.3 Calculation of Electrical Energy/Power. The total FGD electrical energy consumption shall be measured by recording the input energy to the FGDS. Energy data (three-phase amps, phase volts, power factor, and kw), to be recorded by a watt-hour meter or a recording watt meter and averaged, should be over 24 hours but never less than 12 hours.

$$\textit{Power} = \textit{Three (Phase volts) (Phase current) (Power factor)}$$

or

$$\textit{Power} = \textit{(Phase volts) (Three phase current) (Power factor)}$$

Finally,

$$\textit{Energy} = \textit{(Power) (Elapsed time)}$$

For further discussion, see IEEE Standard 120.

Copyright ASME International
Provided by IHS under license with ASME
No reproduction or networking permitted without license from IHS
Not for Resale

5.4 CALCULATION OF REAGENT RATIOS

Reagent Ratios shall be calculated as follows.

• *RRI*

$$RRI = \frac{G_{rt}(M_{SO_2})}{G_{SO_2}(\text{entering})} \tag{5.22}$$

• *RRR*

$$RRR = \frac{G_{rt}(M_{SO_2})}{G_{SO_2}\ (\text{entering}) - G_{SO_2}\ (\text{exiting})} \tag{5.23}$$

5.5 CALCULATION OF WATER CONSUMPTION AND WASTE BY-PRODUCT PRODUCTION

These calculations are dependent on the measurement method chosen in Section 4, and the calculation required should be considered in the selection of such methods.

5.6 CALCULATION OF MEASUREMENT UNCERTAINTY

5.6.1 Approach. The uncertainty of a final result depends on the individual measuring instruments chosen and how their corresponding individual uncertainties influence the overall calculation.

When choosing the type of instrument needed for a measurement, the accuracy required should be viewed in terms of sensitivity or how it effects the overall uncertainty. Each instrument should be examined carefully and the actual uncertainty determined. The effect of each individual uncertainty will be determined by calculating the effect caused in the overall calculation.

The overall uncertainty of a final result can be found by taking the square root of the sum of the squares of these individual effects (see PTC 19.1).

5.6.2 Example of Measurement Uncertainty Determination; Calculation of the Lime Consumption Reagent Ratio, RRI

(a) Governing Equations. Fig. 5.1 illustrates a typical FGDS.

(1) The reagent ratio, based on the inlet SO_2 concentration, is defined as the moles of reagent divided by the moles of SO_2 in the gas inlet.

$$RRI = \frac{G_r\, M_{SO_2}}{G_{SO_2}} \tag{5.24}$$

(2) Using Eq. (5.14) to define G_r, and Eq. (5.11) to define G_{SO2}, the following equation results.

$$RRI = \left[\frac{Q_s\left(\%r\right)\rho_s}{M_r}\right] \Big/ \left[\frac{C_{SO_2}\, Q_{sd}}{K_7\, M_{SO_2}}\right] \tag{5.25}$$

$$Q_s = \frac{V_T}{t_T}\,(L_i - L_F)$$

Copyright ASME International
Provided by IHS under license with ASME
No reproduction or networking permitted without license from IHS Not for Resale

(3) Using the tank drop method specified in para. 4.2.2 *(c)(1), Level Drop* for reagent flow measurement.

$$Q_s = \frac{V_T}{t_T} (L_i - L_F) \tag{5.13}$$

(4) Using Method PTC 40 to determine the SO_2 concentration, and flue gas volumetric flowrate.

$$Q_{sd} = (3600 \text{ sec/hr}) (1\text{-}B_{wa}) v_s A \left[\frac{T_{std}}{T_{s(avg)}}\right] \left[\frac{P_s}{P_{std}}\right] \tag{5.9}$$

$$v_s = K_p C_p (\sqrt{\Delta P})_{avg} \left[\frac{T_{s(avg)}}{P_s M_a}\right]^{1/2} \tag{5.8}$$

(b) Example Test Results. Using Fig. 5.1, the following "sample" test results are given:

t_T = Time elapsed = 2 hours
L_i = Initial tank level = 20 ft.
L_f = Final tank level = 12 ft.
V_T = Volume per tank level = 3383.9 gal/ft
ρ_s = Density of reagent = 9.0 lbm/gal
%r = Concentration of reagent flow = 12.0%
M_r = Molecular weight of reagent = 56.0 lbm/lb-mole
C_{SO2} = Inlet concentration of SO_2 = 511 mg/l
Q_{sd} = Dry standard volumetric flow rate = 500,000 ft³/min

(1) Table 5.1 illustrates the individual uncertainties of each test measurement, and their effect on the overall uncertainty of the RRI calculation.

The overall combined uncertainty in the calculation of the Reagent Ratio:

$$= \pm\sqrt{\text{Sum } U^2} = \pm 7.389\%$$

(2) The above example is for illustration purposes only. Instrument selection, calibration, sample location, and/or sampling frequency in an actual test may result in different individual uncertainty contributions to the overall uncertainty. These contributions should be determined prior to testing so changes can be made to minimize the overall uncertainty to within acceptable values.

5.6.3 Review of Results. The test measurements that effect the overall uncertainty significantly should be reviewed to insure that minimum uncertainty will be achieved. Instrument selection, calibration, sample location, and sampling frequency should be determined during test preparation, keeping the effect on the overall uncertainty (sensitivity) in mind.

Copyright ASME International
Provided by IHS under license with ASME
No reproduction or networking permitted without license from IHS Not for Resale

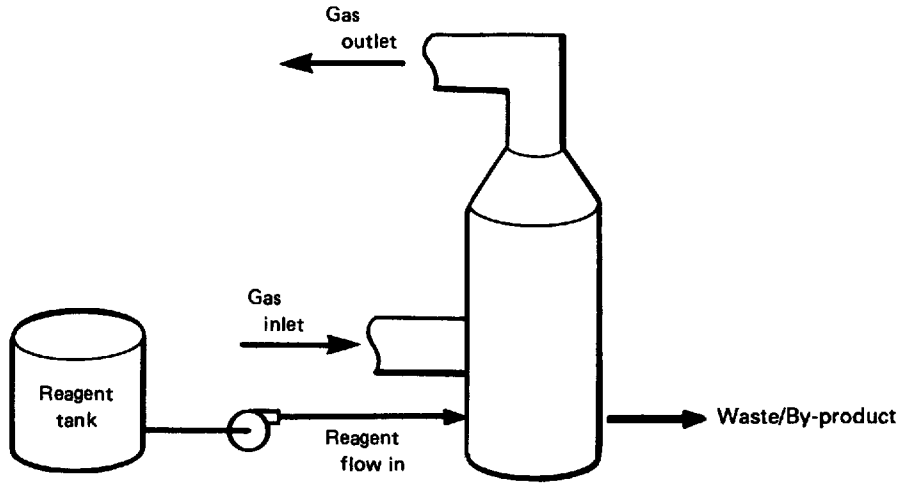

FIG. 5.1 TYPICAL FGDS

TABLE 5.1
TEST MEASUREMENT UNCERTAINTIES AND EFFECTS

Test Measurement [Note (1)]	Uncertainty in Measurement	U, Effect on RRI Uncertainty	U^2
L_f	±0.33 ft	±2.75%	7.56
L_t	±0.33 ft	±1.65%	2.72
ρ_s	±0.10 lbm/gal	±1.11%	1.232
%r	±0.2%	±1.66%	2.756
C_{SO_2}	±20 mg/l	±3.91%	15.319
Q_{sd}	±25,000 ft³/min	±5.00%	25.000

NOTE:
(1) See Table 2.2 for measurement description.

Copyright ASME International
Provided by IHS under license with ASME
No reproduction or networking permitted without license from IHS Not for Resale

SECTION 6 — REPORT OF RESULTS

The report of the results can be presented in the following suggested format. The nature of the information gathered should be complete and thorough in the judgment of the parties. The information should include all raw data, all calculations, the final tabulated reduced data, and as much general information concerning the facility as is deemed relevant to the test.

6.1 INTRODUCTION (one page)

(a) Owner
(b) Designation of unit
(c) Name and location of plant
(d) Brief description of the FGDS
(e) Brief history of unit operation since initial start-up
(f) Object of test
(g) Date(s) of test
(h) Test personnel

6.2 BRIEF SUMMARY OF RESULTS

The summary of results should be a brief report of test results and conclusions (one or two pages). A tabular or graphical presentation may be used to give a quick picture of the essential findings

6.3 FGDS PROCESS DESCRIPTION

(a) Manufacturer
(b) Date of first commercial operation
(c) Equipment description (including design ratings)
(d) Process description
(e) Process flow diagram
(f) Performance requirements

6.4 TEST METHODS AND PROCEDURES

(a) Detailed object(s) of test
(b) Test procedure
(c) Complete detailed description of test (indicating test methods and variations used, and criteria for conducting the test)
  (1) Unit loads
  (2) Time durations
  (3) Determination of steady-state conditions
(d) Any deviations from Code procedure and other significant agreements by parties to the test shall be included
(e) Ancillary equipment (monitoring digital systems etc.)

6.5 PRESENTATION (including all runs), DISCUSSION AND INTERPRETATION OF RESULTS

(a) Percent SO_2 removal (%R)
(b) Reagent ratio (RRI or RRR)
(c) Energy/Power consumption
  (1) Electrical
  (2) Thermal
  (3) Mechanical
(d) Water consumption and characterization
(e) Reagent consumption and characterization
(f) Waste/By-product production and characterization
(g) Comparison of measured performance vs designed performance

6.6 APPENDICES

(a) Field data
(b) Analytical data
(c) Detailed calculations
(d) Other pertinent information

Copyright ASME International
Provided by IHS under license with ASME
No reproduction or networking permitted without license from IHS Not for Resale

SECTION 7 — REFERENCES

[1] Electric Power Research Institute Publication, *Flue Gas Desulfurization Chemistry and Analytical Methods Handbook*, Volumes I and II, CS-3612, (Latest amended revision and supplements).

[2] American Public Health Association, *Standard Methods for the Examination of Water and Wastewater*, (Latest edition), Washington, D.C.
- ASTM D1888 - Standard Test Methods for Particulate and Dissolved Matter, Solids, or Residue in Water.
- ASTM D2458 - Standard Method for Flow Measurement of Water by the Venturi Meter Tube.
- ASTM D3370 - Standard Practices for Sampling Water.
- ASTM D3856 - Standard Guide for Evaluating Laboratories Engaged in Sampling and Analysis of Water and Waste Water.

[3] United States Environmental Protection Agency, 40 CFR Part 60 Appendix A (Methods 1-8) and Appendix B (Performance Specification 2).

[4] ASME PTC Flow Measurement
- PTC 19.5 on Application, Part II of Fluid Meters: Interim Supplement on Instruments and Apparatus
- "Fluid Meters, Their Theory and Application," Sixth Edition, 1971

[5] ASME Performance Test Codes
- PTC 1 on General Instructions
- PTC 2 on Definitions and Values
- PTC 3.1 on Diesel and Burner Fuels
- PTC 3.2 on Solid Fuels
- PTC 3.3 on Gaseous Fuels

[6] ASME PTC Supplements on Instruments and Apparatus
- PTC 19.2 on Pressure Measurement
- PTC 19.3 on Temperature Measurement
- PTC 19.6 on Electrical Measurements (IEEE Standard 120)
- PTC 19.10 on Flue and Exhaust Gas Analyses

[7] EPA Publications on Emissions Test Procedures
- EPA 650/4-74-021

Collaborative Study of Method For The Determination of Particulate Matter Emissions From Stationary Sources (Fossil Fuel Fired Steam Generators)
- EPA 650/4-74-022

Collaborative Study of Method For The Determination of Particulate Matter Emissions From Stationary Sources (Municipal Incinerators)
- EPA 650/4-74-024

Collaborative Study of Method For the Determination of Sulfur Dioxide Emissions From Stationary Sources (Fossil Fuel Fired Steam Generators)
- EPA 650/4-74-029

Collaborative Study of Method For The Determination of Particulate Matter Emissions From Stationary Sources (Portland Cement Plant)

Copyright ASME International
Provided by IHS under license with ASME
No reproduction or networking permitted without license from IHS Not for Resale

APPENDIX A
TYPES OF FLUE GAS DESULFURIZATION (FGD)

A.1 DRY FGD

FGD process comprised of contacting a flue gas containing sulfur oxide with an alkaline material, without saturating the flue gas leaving the reactor with moisture, and thus producing a dry waste product or dry by-product.

A.2 WET FGD

FGD process comprised of contacting a flue gas containing sulfur oxide with an SO_2 sorbent, saturating the flue gas with moisture and producing a wet waste product or wet by-product.

A.3 REGENERABLE FGD

Process that regenerates and recycles the sorption medium.

A.4 NONREGENERABLE OR THROWAWAY FGD

Process that consumes the sorption medium.

Copyright ASME International
Provided by IHS under license with ASME
No reproduction or networking permitted without license from IHS
Not for Resale

APPENDIX B
PTC 40 TEST METHOD
DETERMINATION OF PARTICULATE AND SULFUR DIOXIDE EMISSIONS FROM FLUE GAS DESULFURIZATION SYSTEMS (FGDS)

B.1 PRINCIPLE AND APPLICABILITY

B.1.1 Principle. Particulate matter (PM) and SO_2 are withdrawn isokinetically from the source. PM is collected on a glass fiber filter maintained at a temperature in the range of 120° ±14°C (248° ±25°F) or such other temperature as agreed by parties to the test. SO_2 is measured by the Barium-Thorin titration method.

B.1.2 Applicability. The method is applicable for the determination of PM and SO_2 emissions from inlet and outlet sampling locations of the FGDS.

B.2 EQUIPMENT

B.2.1 Sampling Train. A schematic of the sampling train used in this method is shown in Fig. B.1. Commercial models of this train are available. Since correct usage of the train is important in obtaining valid results, all test personnel should be trained and be familiar with the operation and maintenance practices associated with the method. Such training is commercially available. The sampling train consists of the following components.

(a) Probe Nozzle. Stainless steel (316) or glass with sharp, tapered leading edge. The angle of taper shall be 30° and the taper shall be on the outside to preserve a constant internal diameter. The probe nozzle shall be of the button-hook or elbow design. If made of stainless steel, the nozzle shall be constructed from seamless tubing.

A range of nozzle sizes suitable for isokinetic sampling should be available, eg., 0.32 to 1.27 cm (1/8 to 1/2 in.) — or larger if higher volume sampling trains are used — inside diameter (ID) nozzles in increments of 0.16 cm (1/16 in.). Each nozzle shall be calibrated according to the procedures outlined in para. B.5.

(b) Probe Liner. Borosilicate or quartz glass tubing with a heating system capable of maintaining a gas temperature at the exit end during sampling of 120° ±14°C (248° ±25°F), or such other temperature as specified by agreement by the parties to the test. (The parties to the test may choose to operate the equipment at a temperature lower than that specified.) Since the actual temperature at the outlet of the probe is not usually monitored during sampling, probes constructed according to EPA Document APTD-0581 and the calibration curves of APTD-0576 (or calibrated according to the procedure outlined in APTD-0576) will be considered acceptable.

Either borosilicate or quartz glass probe liner may be used for stack temperatures up to about 480°C (900°F). Quartz liners shall be used for temperatures between 480° and 900°C (900° and 1,650°F). Both types of liners may be used at higher temperatures than specified for short periods of time. The softening temperature for borosilicate is 820°C (1,508°F), and for quartz it is 1,500°C (2,732°F).

Whenever practical, every effort should be made to use borosilicate or quartz glass probe liners. Alternatively, metal liners (e.g., stainless steel (316), Incoloy 825, or other corrosion-resistant metals) made of seamless tubing may be used.

(c) Type S Pitot Tube. The Type S pitot tube (Fig. B.2) shall be made of metal tubing (e.g., stainless steel). It is recommended that the external tubing diameter (dimension D_t of Fig. B.3b) be between 0.48 and 0.95 cm (3/16 and 3/8 in.). There shall be an equal distance from the base of each leg of the pitot

Copyright ASME International
Provided by IHS under license with ASME
No reproduction or networking permitted without license from IHS
Not for Resale

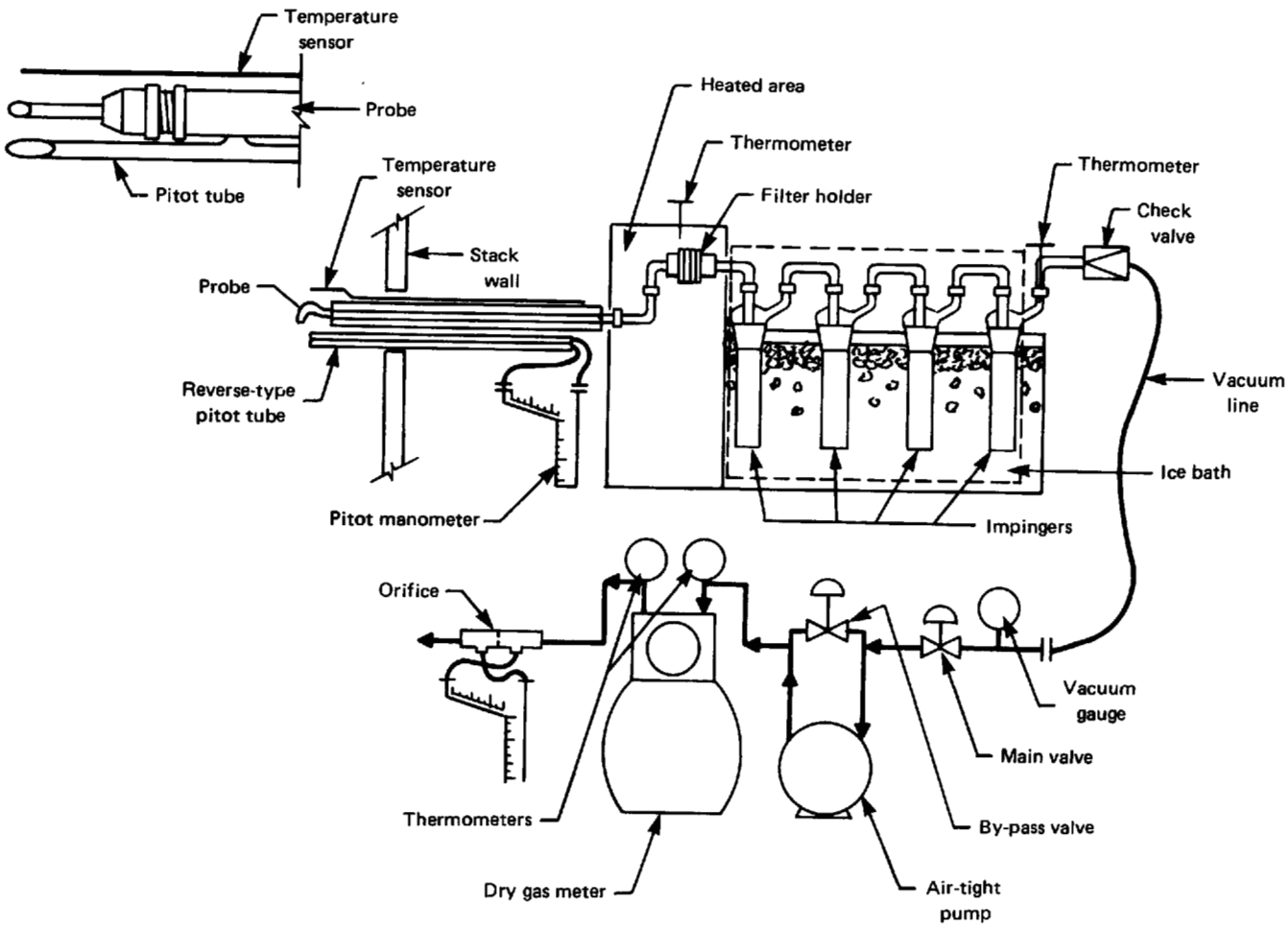

FIG. B.1 PARTICULATE AND SO_2 EMISSIONS SAMPLING TRAIN

Copyright ASME International
Provided by IHS under license with ASME
No reproduction or networking permitted without license from IHS
Not for Resale

tube to its face-opening plane (dimensions P_A and P_B of Fig. B.3b); it is recommended that this distance be between 1.05 and 1.50 times the external tubing diameter. The face openings of the pitot tube shall, preferably, be aligned as shown in Fig. B.3; however, slight misalignments of the openings are permissible (see Fig. B.4).

The Type S pitot tube shall have a known coefficient.

A baseline coefficient value of 0.84 may be assigned to the pitot tube, if the face opening alignment characteristics shown in Fig. B.4 and the pitot construction dimensions described in this paragraph are measured and verified to be within specifications.

Alternatively, the pitot may be calibrated using procedures described in EPA Method 2 (40 CFR Part 60, Appendix A).

(d) Differential Pressure Gauge. An inclined manometer or equivalent device is used. Most sampling trains are equipped with a 10 in. (water column) inclined-vertical manometer, having 0.01 in. H_2O divisions on the 0 to 1 in. inclined scale, and 0.1 in. H_2O divisions on the 1 to 10 in. vertical scale. This type of manometer (or other gage of equivalent sensitivity) is satisfactory for the measurement of Δp values as low as 1.3 mm (0.05 in.) H_2O.

(e) Filter Holder. Borosilicate glass, with a glass frit filter support and a silicone rubber gasket. Other materials of construction (e.g., stainless steel, Teflon, Viton) may be used. The holder design shall provide a positive seal against leakage from the outside or around the filter. The holder shall be attached immediately at the outlet of the probe (or cyclone, if used).

(f) Filter Heating System. Any heating system capable of maintaining a temperature around the filter holder during sampling of 120° ±14°C (248° ±25°F), or such other temperature as specified by agreement of parties to the test. A temperature gauge capable of measuring temperature to within 3° C (5.4°F) shall be installed so that the temperature around the filter holder can be regulated and monitored during sampling.

(g) Impingers. Four, as shown in Fig. B.1. The first and third shall be of the Greenburg-Smith design with standard tips. The second and fourth shall be of the Greenburg-Smith design, modified by replacing the insert with an approximately 13 mm (0.5 in.) ID glass tube, having an unconstricted tip located 13 mm (0.5 in.) from the bottom of the flask. Similar collection systems may be used.

(h) Metering System. Vacuum gauge, leak free pump, thermometers capable of measuring temperature to within 3°C (5.4°F), dry gas meter capable of measuring volume to within 2%, and related equipment, as shown in Fig. B.1. Other metering systems capable of maintaining sampling rates within 10% of isokinetic and of determining sample volumes to within 2% may be used. When the metering system is used in conjunction with a pitot tube, the system shall enable checks of isokinetic rates.

(i) Barometer. Mercury aneroid, or other barometer capable of measuring atmospheric pressure to within 2.5 mm Hg (0.1 in. Hg). In many cases the barometric reading may be obtained from a nearby national weather service station, in which case the station value (which is the absolute barometric pressure) shall be requested, and an adjustment for elevation differences between the weather station and sampling point shall be applied at a rate of minus 2.5 mm Hg (0.1 in. Hg) per 30 m (100 ft) elevation increase or vice versa for elevation decrease.

(j) Gas Density Determination Equipment. Temperature sensor and pressure gauge and gas analyzer, if necessary for determination of major gaseous constituent concentrations. The temperature sensor shall, preferably, be permanently attached to the pitot tube or sampling probe in a fixed configuration, such that the tip of the sensor extends beyond the leading edge of the probe sheath and does not touch any metal. Alternatively, the sensor may be attached just prior to use in the field. Note, however, that if the temperature sensor is attached in the field, the sensor must be placed in an interference-free arrangement with respect to the Type S pitot tube openings.

B.2.2 Sample Recovery. The following items are needed for sample recovery.

(a) Probe-Liner and Probe-Nozzle Brushes. Nylon bristle brushes with stainless steel wire handles. The probe brush shall have extensions (at least as long as the probe) of stainless steel, Nylon, Teflon, or similarly inert material. The brushes shall be properly sized and shaped to brush out the probe liner and nozzle.

(b) Wash Bottles. Two. Glass wash bottles are recommended; polyethylene wash bottles may be used at the option of the tester. It is recommended that acetone not be stored in polyethylene bottles for longer than a month.

(c) Glass Sample Storage Containers. Chemically resistant borosilicate glass bottles for acetone washes, 500 ml or 1000 ml. Screw cap liners shall either be rubberbacked Teflon or shall be constructed so as to be leak free and resistant to chemical attack by acetone. (Narrow mouth glass bottles have been found

Copyright ASME International
Provided by IHS under license with ASME
No reproduction or networking permitted without license from IHS
Not for Resale

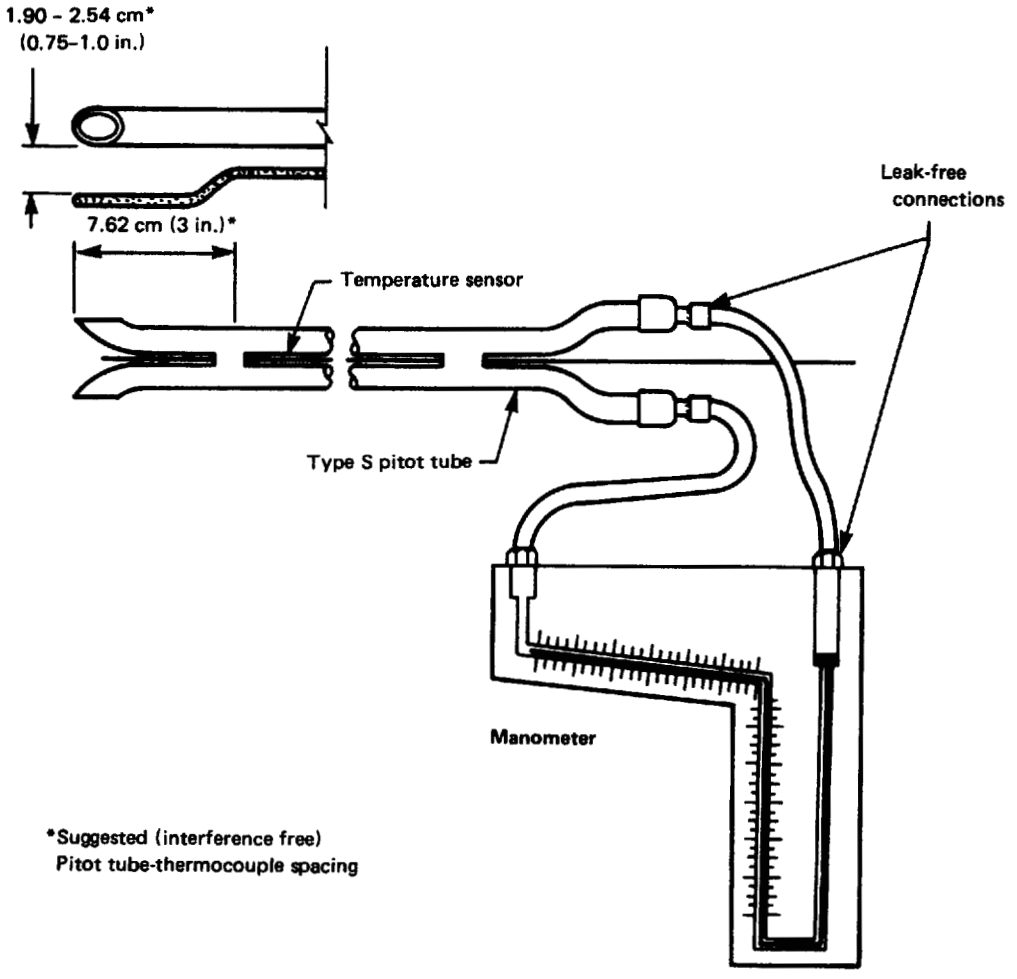

FIG. B.2 TYPE S PITOT TUBE MANOMETER ASSEMBLY

Copyright ASME International
Provided by IHS under license with ASME
No reproduction or networking permitted without license from IHS
Not for Resale

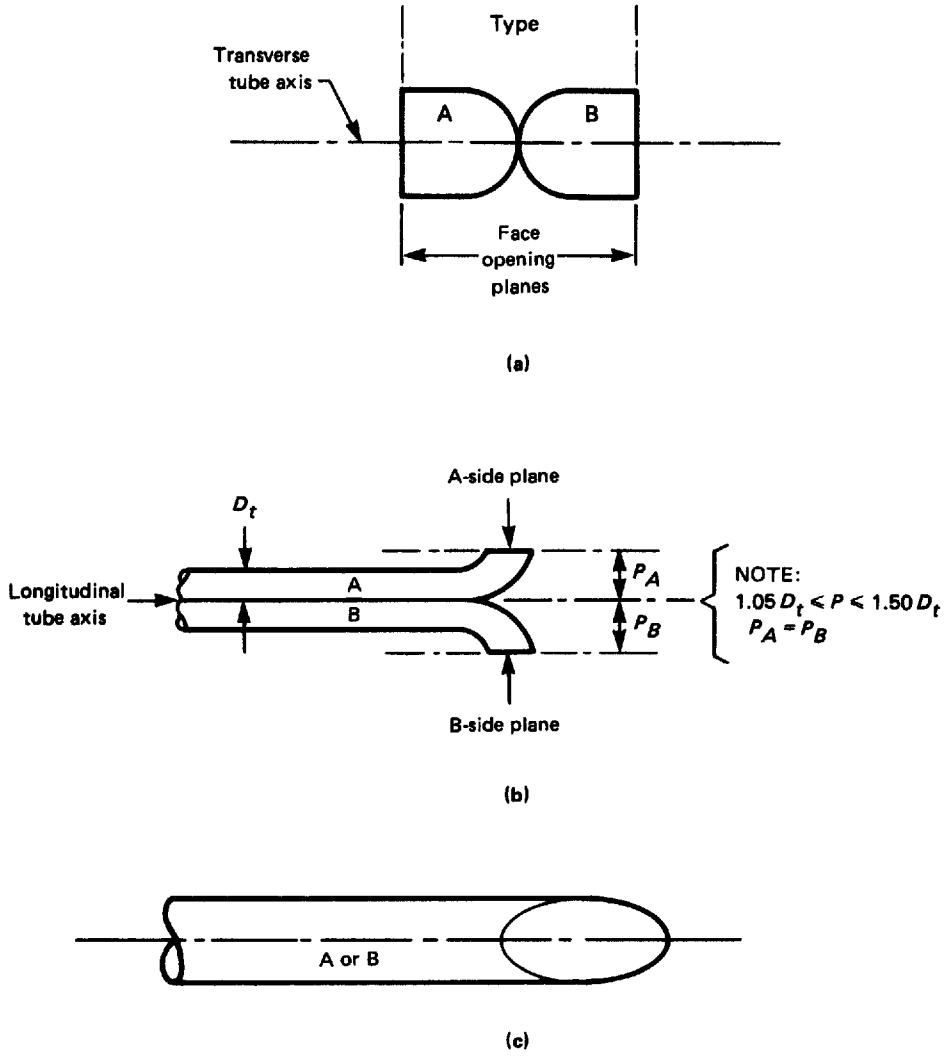

Properly constructed Type S pitot, shown in: (a) end view; face opening planes perpendicular to transverse axis; (b) top view; face opening planes parallel to longitudinal axis; (c) side view, both legs of equal length and centerlines coincident, when viewed from both sides. Baseline coefficient values of 0.84 may be assigned to pitot tubes constructed this way.

FIG. B.3 CONFIGURATIONS OF A PROPERLY CONSTRUCTED TYPE S PITOT TUBE

Copyright ASME International
Provided by IHS under license with ASME
No reproduction or networking permitted without license from IHS
Not for Resale

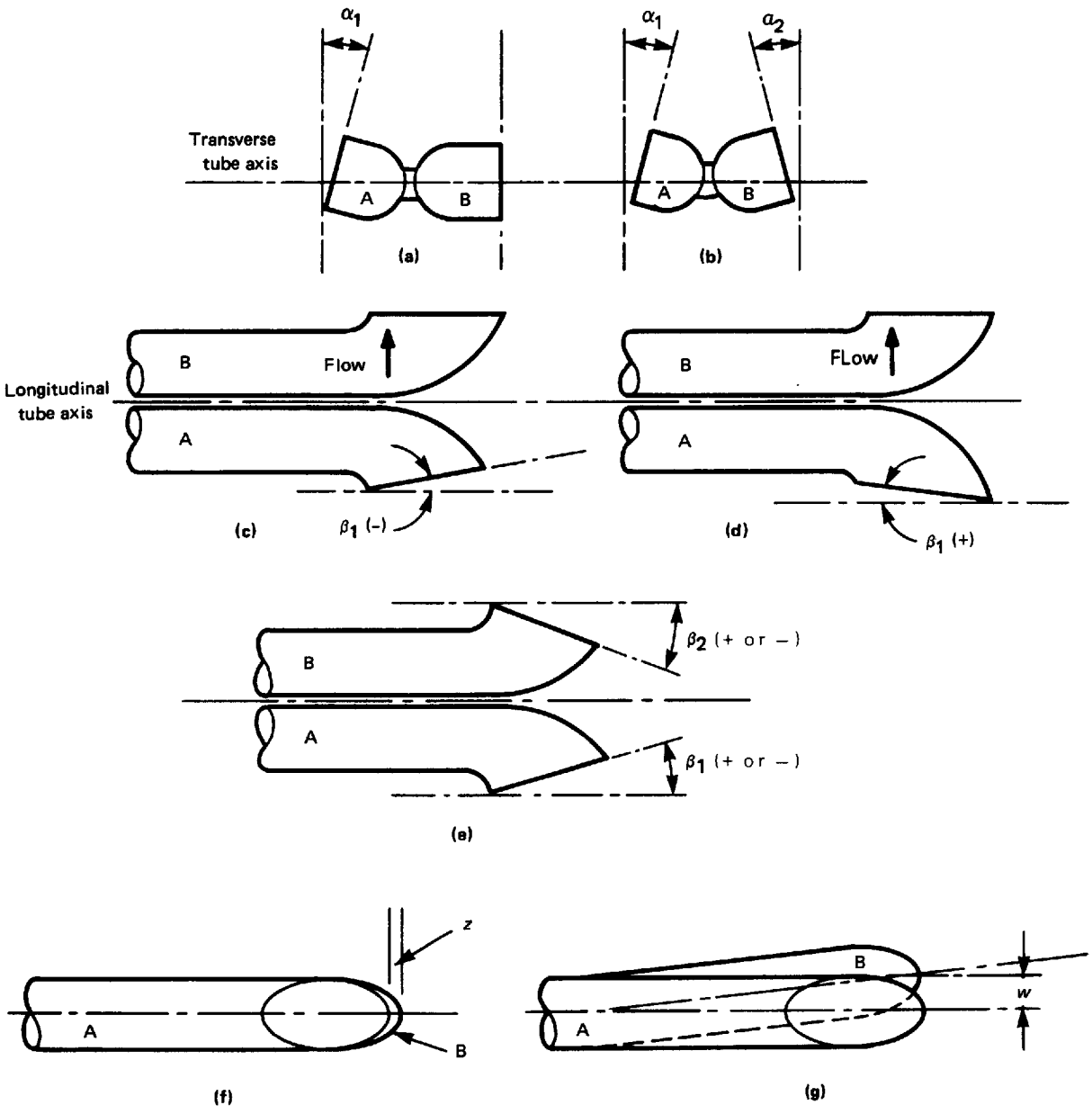

Types of face-opening misalignment that can result from field use or improper construction of Type S pitot tubes. These will not affect the baseline value of Cp (s) so long as α_1 and $\alpha_2 \leq$ 10 deg., β_1 and $\beta_2 \leq$ 5 deg., $z \leq$ 0.32 cm (1/8 in.), and $w \leq$ 0.08 cm (1/32 in.).

FIG. B.4 TYPES OF FACE-OPENING MISALIGNMENT

Copyright ASME International
Provided by IHS under license with ASME
No reproduction or networking permitted without license from IHS
Not for Resale

to be less prone to leakage.) Alternatively, polyethylene bottles may be used.

(d) Petri Dishes. For filter samples, glass or polyethylene, unless otherwise specified by the parties to the test.

(e) Graduated Cylinder and/or Balance. To measure condensed water to within 1 ml or 1 g. Graduated cylinders shall have subdivisions no greater than 2 ml. Most laboratory balances are capable of weighing to the nearest 0.5 g or less. Any of these balances is suitable for use here and in para. B.2.3.*(d)*.

(f) Plastic Storage Containers. Air tight containers to store silica gel.

(g) Funnel and Rubber Policeman. To aid in transfer of silica gel to container; not necessary if silica gel is weighed in the field.

(h) Funnel. Glass or polyethylene, to aid in sample recovery.

B.2.3 Analysis. For analysis, the following equipment is needed.

(a) Glass Weighing Dishes

(b) Desiccator

(c) Analytical Balance. To measure to within 0.1 mg.

(d) Balance. To measure to within 0.5 g.

(e) Beakers. 250 ml.

(f) Hygrometer. To measure the relative humidity of the laboratory environment.

(g) Temperature Gage. To measure the temperature of the laboratory environment.

(h) Pipettes. Volumetric 25 ml, 100 ml.

(i) Burette. 50 ml.

(j) Erlenmeyer Flask. 250 ml (one for each sample blank and standard).

(k) Graduated Cylinder. 100 ml.

(l) Trip Balance. 500 g capacity, to measure to ± 0.5 g.

(m) Dropping Bottle. To add indicator solution, 125 ml size.

B.3 Reagents

B.3.1 Sampling. The following reagents are used in sampling.

(a) Filters. Glass fiber filters, without organic binder, exhibiting at least 99.95 percent efficiency (<0.05 percent penetration) on 0.3 micron dioctyl phthalate smoke particles. The filter efficiency test shall be conducted in accordance with ASTM standard method D2986-71 (Reapproved 1978). Test data from the manufacturer's quality control program are sufficient for this purpose. In sources containing SO_2 or SO_3, the filter material must be of a type that is unreactive to SO_2 or SO_3.

(b) Silica Gel. Indicating type, 6 to 16 mesh. If previously used, dry at 175°C (350°F) for 2 hours. New silica gel may be used as received. Alternatively, other types of desicants (equivalent or better) may be used.

(c) Water. Deionized, distilled to conform to ASTM specification D1193-77, Type 3. At the option of the analyst, the $KMnO_4$ test for oxidizable organic matter may be omitted when high concentrations of organic matter are not expected to be present.

(d) Hydrogen Peroxide. 3 percent. Dilute 100 ml of 30% hydrogen peroxide to 1 liter with deionized, distilled water. Prepare fresh daily.

(e) Crushed Ice

(f) Stopcock Grease. Acetone-insoluble, heat-stable silicone grease. This is not necessary if screw-on connectors with Teflon sleeves, or similar, are used. Alternatively, other types of stopcock grease may be used.

(g) Glass Wool. Borosilicate or quartz.

B.3.2 Sample Recovery

(a) Water. Same as para. B.3.1*(c), Water.*

(b) Acetone. Reagent grade, <0.001% residue, in glass bottles is required. Acetone from metal containers generally has a high residue blank and should not be used. Sometimes, suppliers transfer acetone to glass bottles from metal containers; thus, acetone blanks shall be run prior to field use and only acetone with low blank values (<0.001%) shall be used. In no case shall a blank value of greater than 0.001% of the weight of acetone used be subtracted from sample weight.

B.3.3 Analysis

(a) Water. Same as para. B.3.1(c).

(b) Isopropanol. 100%.

(c) Thorin Indicator. 1-(o-arsonophenylazo) 2-naphtol-3, 6-disulfonic acid, disodium salt, or equivalent. Dissolve 0.20 g in 100 ml of deionized, distilled water.

(d) Barium Perchlorate (0.0100 Normal). Dissolve 1.95g of barium perchlorate trihydrate [$Ba(ClO_4)_2 \cdot 3H_2O$] in 200 ml deionized, distilled water, and dilute to 1 liter with isopropanol; 1.22 g of barium chloride dihydrate [$Ba(ClO_4)_2 \cdot 3H_2O$] may be used instead of the barium perchlorate. Standardize with sulfuric acid as in para. B.5.8. This solution must be protected against evaporation at all times.

(e) Sulfuric Acid Standard (0.0100 N). Purchase or standardize to ± 0.0002 N against 0.0100 N NaOH that has previously been standardized against primary

Copyright ASME International
Provided by IHS under license with ASME
No reproduction or networking permitted without license from IHS
Not for Resale

standard potassium acid phthalate.

(f) Acetone. Same as para. B.3.2.*(b)*

(g) Desiccant. Anhydrous calcium sulfate, indicating type. Alternatively, other types of desiccants may be used.

B.4 PROCEDURE

B.4.1 Sampling. The complexity of this method is such that, in order to obtain reliable results, testers should be trained and experienced with the test procedures.

(a) Pretest Preparation. All the components shall be maintained and calibrated according to the procedure specified herein.

Weigh several 200 to 300 g portions of silica gel in airtight containers to the nearest 0.5 g. Record the total weight of the silica gel plus container, on each container. As an alternative, the silica gel need not be preweighed, but may be weighed directly in the impinger or sampling holder just prior to train assembly.

Check filters visually against light for irregularities and flaws or pinhole leaks. Label filters of the proper diameter on the back side near the edge using numbering machine ink. As an alternative, label the shipping containers (glass or plastic petri dishes) and keep the filters in these containers at all times except during sampling and weighing.

Desiccate the filters at 20° ±5.6° C (68° ±10° F) and ambient pressure for at least 24 hours and weigh at intervals of at least 6 hours to a constant weight, i.e., 0.5 mg change from previous weighing; record results to the nearest 0.1 mg. During each weighing, the filter must not be exposed either to the laboratory atmosphere for a period greater than 2 minutes or a relative humidity above 50%. Alternatively, the filters may be oven dried at 105°C (220°F) for 2 to 3 hours, desiccated for 2 hours, and weighed.

(b) Preliminary Determinations

(1) Selection of Measurement Site. Sampling or velocity measurement is performed at a site located at least eight stack or duct diameters downstream, and two diameters upstream from any flow disturbance such as a bend, expansion, or contraction in the stack, or from a visible flame. If necessary, an alternative location may be selected, at a position at least two stack or duct diameters downstream and a half diameter upstream from any flow disturbance. For a rectangular cross section, an equivalent diameter D_e shall be calculated from the following equation, to determine the upstream and downstream distances:

$$D_e = \frac{2\,LW}{(L + W)}$$

where

L = length
W = width

(2) Determining the Number of Traverse Points. When the eight- and two-diameter criterion can be met, the minimum number of traverse points shall be: (1) twelve, for circular or rectangular stacks with diameters (or equivalent diameters) greater than 0.61 meter (24 in.); (2) eight, for circular stacks with diameters between 0.30 and 0.61 meter (12-24 in.); (3) nine, for rectangular stacks with equivalent diameters between 0.30 and 0.61 meter (12-24 in.).

When the eight- and two-diameter criterion cannot be met, the minimum number of traverse points is determined from Fig. B.5. Before referring to Fig. B.5, however, determine the distances from the chosen measurement site to the nearest upstream and downstream disturbances, and divide each distance by the stack diameter or equivalent diameter, to determine the distance in terms of the number of duct diameters.

Then, determine from Fig. B.5 the minimum number of traverse points that corresponds: (1) to the number of duct diameters upstream; and (2) to the number of diameters downstream. Select the higher of the two minimum number of traverse points, or a greater value, so that for circular stacks the number is a multiple of 4, and for rectangular stacks, the number is one of those shown in Table B.1

(3) Circular Stacks. Locate the traverse points on two perpendicular diameters according to Table B.2 and the example shown in Fig. B.6. Any equation that gives the same values as those in Table B.2 may be used in lieu of Table B.2.

For particulate traverses, one of the diameters must be in a plane containing the greatest expected concentration variation, e.g., after bends, one diameter shall be in the plane of the bend. This requirement becomes less critical as the distance from the disturbance increases; therefore, other diameter locations may be used, subject to agreement by parties to the test.

When any of the traverse points as located in this paragraph, B.4.1, fall within 2.5 cm (1.00 in.) of the stack walls, relocate them away from the stack walls to: (1) a distance of 2.5 cm (1.00 in.); or (2) a distance equal to the nozzle's inside diameter, which-

Copyright ASME International
Provided by IHS under license with ASME
No reproduction or networking permitted without license from IHS
Not for Resale

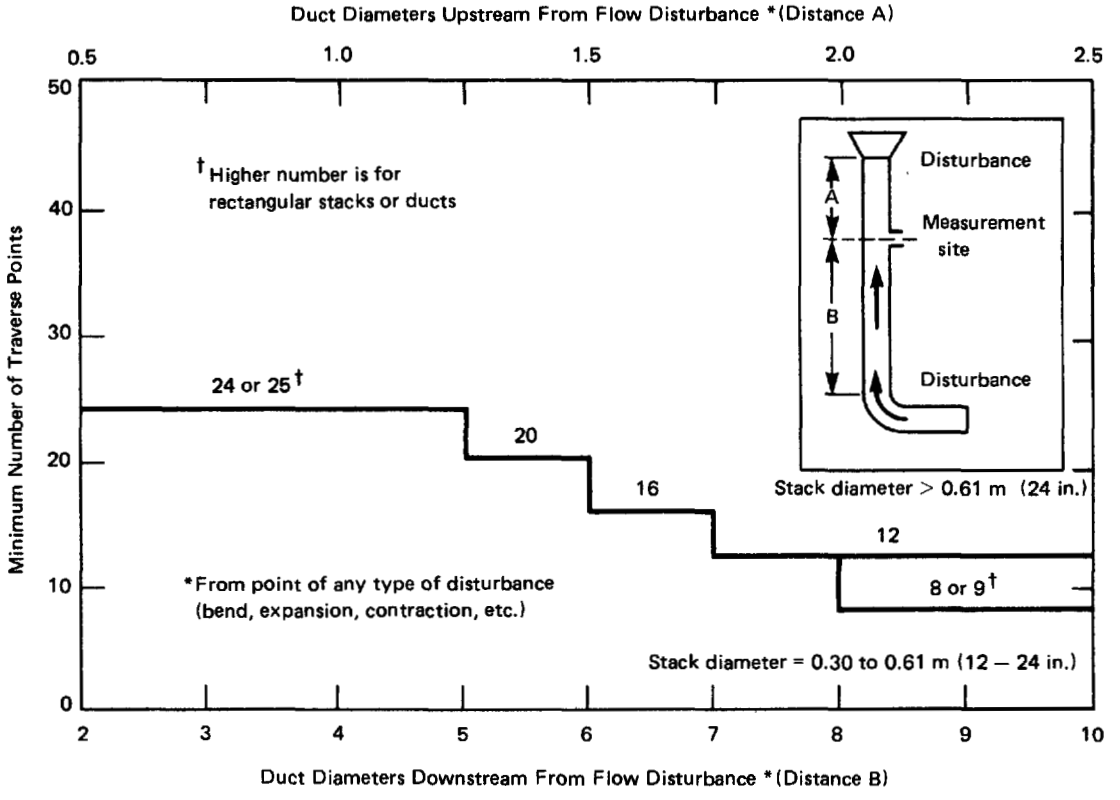

FIG. B.5 MINIMUM NUMBER OF TRAVERSE POINTS FOR PARTICULATE TRAVERSES

Copyright ASME International
Provided by IHS under license with ASME
No reproduction or networking permitted without license from IHS
Not for Resale

Traverse point	Distance % of diameter
1	4.4
2	14.7
3	29.5
4	70.5
5	85.3
6	95.6

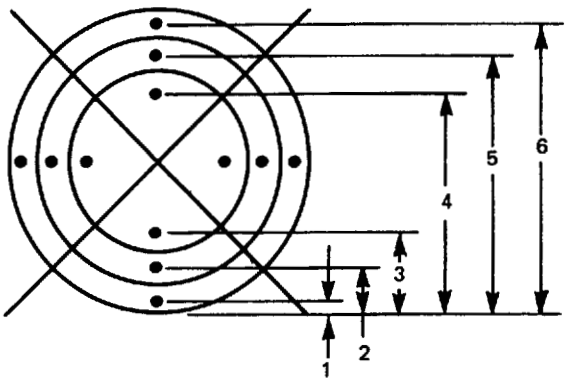

FIG. B.6 EXAMPLE SHOWING CIRCULAR STACK CROSS SECTION DIVIDED INTO 12 EQUAL AREAS, WITH LOCATION OF TRAVERSE POINTS INDICATED

Copyright ASME International
Provided by IHS under license with ASME
No reproduction or networking permitted without license from IHS
Not for Resale

ever is larger. These relocated traverse points (on each end of a diameter) shall be the "adjusted" traverse points.

Whenever two successive traverse points are combined to form a single adjusted traverse point, treat the adjusted point as two separate traverse points, both in the sampling (or velocity measurement) procedure, and in recording the data.

(4) Rectangular Stacks. Determine the number of traverse points as explained in para. B.4.1 *(b)(2), Determining the Number of Traverse Points,* of this method. From Table B.1, determine the grid configuration. Divide the stack cross-section into as many equal rectangular elemental areas as traverse points, and then locate a traverse point at the centroid of each equal area according to the example in Fig. B.7.

If the parties to the test desire to use more than the minimum number of traverse points, expand the "minimum number of traverse points" matrix (see Table B.1) by adding the extra traverse points along one or the other or both legs of the matrix; the final matrix need not be balanced. For example, if a 4 x 3 "minimum number of points" matrix were expanded to 36 points, the final matrix could be 9 x 4 or 12 x 3, and would not necessarily have to be 6 x 6. After constructing the final matrix, divide the stack cross-section into as many equal rectangular, elemental areas as traverse points, and locate a traverse point at the centroid of each equal area.

TABLE B.1
CROSS-SECTION LAYOUT
FOR RECTANGULAR STACKS

Number of Traverse Points	Matrix Layout
9	3 × 3
12	4 × 3
16	4 × 4
20	5 × 4
25	5 × 5
30	6 × 5
36	6 × 6
42	7 × 6
49	7 × 7

(5) Verification of Absence of Cyclonic Flow. In most stationary sources, the direction of stack gas flow is essentially parallel to the stack walls. However, cyclonic flow may exist (1); after such devices as cyclones and inertial demisters following venturi scrubbers, or (2); in stacks having tangential inlets or other duct configurations which tend to induce swirling; in these instances, the presence or absence of

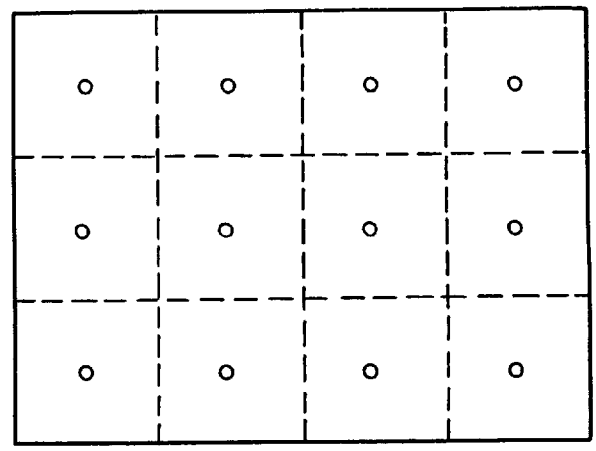

FIG. B.7 EXAMPLE SHOWING RECTANGULAR STACK CROSS SECTION DIVIDED INTO 12 EQUAL AREAS, WITH A TRAVERSE POINT AT CENTROID OF EACH AREA

cyclonic flow at the sampling location must be determined. The following techniques are acceptable for this determination.

Level and zero the manometer. Connect a Type S pitot tube to the manometer. Position the Type S pitot tube at each traverse point, in succession, so that the planes of the face openings of the pitot tube are perpendicular to the stack cross-sectional plane; when the Type S pitot tube is in this position, it is at "0° reference."

Note the differential pressure (Δp) reading at each traverse point. If a null (zero) pitot reading is obtained at 0° reference at a given traverse point, an acceptable flow condition exists at that point. If the pitot reading is not zero at 0° reference, rotate the pitot tube (up to $\pm 90°$ yaw angle), until a null reading is obtained. Carefully determine and record the value of the rotation angle α to the nearest degree. After the null technique has been applied at each traverse point, calculate the average of the absolute values of α; assign α values of 0° to those points for which no rotation was required, and include these in the overall average. If the average value of α is greater than 10°, the overall flow condition in the stack is unacceptable and alternative methodology must be used to perform accurate sample and velocity traverses.

(6) Determination of Sampling Conditions. For the purposes of maintaining isokinetic sampling rates, the following determinations are necessary. These determinations may be conducted using approximation procedures or estimations based on results of previous testing. Procedures as described in

Copyright ASME International
Provided by IHS under license with ASME
No reproduction or networking permitted without license from IHS
Not for Resale

TABLE B.2
LOCATION OF TRAVERSE POINTS IN CIRCULAR STACKS

(Percent of stack diameter from inside wall to traverse point)

Traverse point number on a diameter	Number of traverse points on a diameter											
	2	4	6	8	10	12	14	16	18	20	22	24
1	14.6	6.7	4.4	3.2	2.6	2.1	1.8	1.6	1.4	1.3	1.1	1.1
2	85.4	25.0	14.6	10.5	8.2	6.7	5.7	4.9	4.4	3.9	3.5	3.2
3		75.0	29.6	19.4	14.6	11.8	9.9	8.5	7.5	6.7	6.0	5.5
4		93.3	70.4	32.3	22.6	17.7	14.6	12.5	10.9	9.7	8.7	7.9
5			85.4	67.7	34.2	25.0	20.1	16.9	14.6	12.9	11.6	10.5
6			95.6	80.6	65.8	35.6	26.9	22.0	18.8	16.5	14.6	13.2
7				89.5	77.4	64.4	36.6	28.3	23.6	20.4	18.0	16.1
8				96.8	85.4	75.0	63.4	37.5	29.6	25.0	21.8	19.4
9					91.8	82.3	73.1	62.5	38.2	30.6	26.2	23.0
10					97.4	88.2	79.9	71.7	61.8	38.8	31.5	27.2
11						93.3	85.4	78.0	70.4	61.2	39.3	32.3
12						97.9	90.1	83.1	76.4	69.4	60.7	39.8
13							94.3	87.5	81.2	75.0	68.5	60.2
14							98.2	91.5	85.4	79.6	73.8	67.7
15								95.1	89.1	83.5	78.2	72.8
16								98.4	92.5	87.1	82.0	77.0
17									95.6	90.3	85.4	80.6
18									98.6	93.3	88.4	83.9
19										96.1	91.3	86.8
20										98.7	94.0	89.5
21											96.5	92.1
22											98.9	94.5
23												96.8
24												98.9

Copyright ASME International
Provided by IHS under license with ASME
No reproduction or networking permitted without license from IHS
Not for Resale

this method are also appropriate for these determinations. Determine the stack gas pressure, temperature, and range of velocity heads. Determine the average moisture content and dry gas molecular weight.

This method is also appropriate for these determinations. Determine the stack gas pressure, temperature, and range of velocity heads. Determine the average moisture content and dry gas molecular weight.

Select a nozzle size based on the range of the velocity heads, such that it is not necessary to change the nozzle size in order to maintain isokinetic sampling rates. During the run, do not change the nozzle size. Ensure that the proper differential pressure gage is chosen for the range of velocity heads encountered.

Select a suitable probe liner and probe length such that all traverse points can be sampled. For large stacks, consider sampling from opposite sides of the stack to reduce the length of probes.

Select a total sampling time greater than or equal to the minimum total sampling time as agreed by parties to the test, such that (1) the sampling time per point is not less than 2 minutes and (2) the sample volume taken (corrected to standard conditions) will exceed the required minimum total gas sample volume. The latter is based on an approximate average sampling rate.

It is recommended that the number of minutes sampled at each point be an integer or an integer plus one-half minute, in order to avoid timekeeping errors. The sampling time at each point shall be the same.

(c) Preparation of Collection Train. During preparation and assembly of the sampling train, keep all openings where contamination can occur covered until just prior to assembly or until sampling is about to begin.

Place 100 ml of 3% hydrogen peroxide in both the first and second impingers; retain a portion of the hydrogen peroxide for use as a blank solution. Place about 200 g of silica gel in the fourth impinger.

NOTE: If moisture content is to be determined by impinger analysis, weigh each of the first three impingers (plus absorbing solution) to the nearest 0.5 g and record these weights. The weight of the silica gel (or silica gel plus container) must also be determined to the nearest 0.5 g and recorded.

Using a tweezer or clean disposable surgical gloves, place a labeled (identified) and weighed filter in the filter holder. Be sure that the filter is properly centered and the gasket properly placed so as to prevent the sample gas stream from circumventing the filter. Check the filter for tears after assembly is completed.

When glass liners are used, install the selected nozzle using a Viton A O-ring when stack temperatures are less than 260°C (500°F), and a ceramic or Nextel gasket when temperatures are higher. Other connecting systems using either 316 stainless steel or Teflon ferrules may be used. When metal liners are used, install the nozzle as above or by a leak-free direct mechanical connection. Mark the probe with heat resistant tape or by some other method to denote the proper distance into the stack or duct for each sampling point.

Set up the train as in Fig. B.1, using (if necessary) a very light coat of silicone grease on all ground glass joints, greasing only the outer portion to avoid possibility of contamination by the silicone grease.

Place crushed ice around the impingers.

(d) Leak Check Procedures

(1) Pretest Leak Check. A pretest leak check is recommended, but not required. If the tester opts to conduct the pretest leak check, the following procedure shall be used.

After the sampling train has been assembled, turn on and set the filter and probe heating systems at the desired operating temperatures. Allow time for the temperatures to stabilize. If a Viton A O-ring or other leak free connection is used in assembling the probe nozzle to the probe liner, leak check the train at the sampling site by plugging the nozzle and pulling a 380 mm Hg (15 in. Hg) vacuum.

NOTE: A lower vacuum may be used provided that it is not exceeded during the test.

If a ceramic or Nextel gasket is used, do not connect the probe to the train during the leak check. Instead, leak check the train by first plugging the inlet to the filter holder (cyclone, if applicable) and pulling a 380 mm Hg (15 in. Hg) vacuum (see Note immediately above). Then connect the probe to the train and leak check at about 25 mm Hg (1 in. Hg) vacuum; alternatively, the probe may be leak checked with the rest of the sampling train, in one step, at 380 mm Hg (15 in. Hg) vacuum. Leakage rates in excess of 4% of the average sampling rate or 0.00057 m^3/min (0.02 cfm), whichever is less, are unacceptable.

Start the pump with the bypass valve fully open and with the coarse-adjust valve completely closed. Partially open the coarse-adjust valve and slowly close the bypass valve until the desired vacuum is reached. Do not reverse direction to bypass valve;

Copyright ASME International
Provided by IHS under license with ASME
No reproduction or networking permitted without license from IHS
Not for Resale

this will cause water to back up into the filter holder. If the desired vacuum is exceeded, either leak check at the higher vacuum or end the leak check as described below and start over.

When the leak check is completed, first slowly remove the plug from the inlet to the probe, filter holder, or cyclone (if applicable) and immediately turn off the vacuum pump. This prevents the liquid in the impingers from being forced backward into the filter holder and silica gel from being entrained backward into the third impinger.

(2) Leak Checks During Sample Run. If, during the sampling run, a component (e.g., filter assembly or impinger) change becomes necessary, a leak check shall be conducted immediately before the change is made. The leak check shall be done according to the procedure outlined in para. B.4.1.*(d)(1), Pretest Leak Chart,* except that it shall be done at a vacuum equal to or greater than the maximum value recorded up to that point in the test.

If the leakage rate is found to be no greater than 0.00057 m^3/min (0.02 cfm) or 4% of the average sampling rate (whichever is less), the results are acceptable, and no correction will need to be applied to the total volume of dry gas metered; if, however, a higher leakage rate is obtained, the test shall either record the leakage rate and plan to correct the sample volume as shown in para. B.6.3, or shall void the sampling run.

Immediately after component changes, leak checks are optional; if such leak checks are done, the procedure outlined in para. B.6.4 *Meter Volume Correction*, shall be used.

(3) Post-test Leak Check. A leak check is mandatory at the conclusion of each sampling run. The leak check shall be done in accordance with the procedures outlined in para. B.4.1*(d)(1), Pretest Leak Check,* except that it shall be conducted at a vacuum equal to or greater than the maximum value reached during the sampling run.

If the leakage rate is found to be no greater than 0.00057 m^3/min (0.02 cfm) or 4% of the average sampling rate, whichever is less, the results are acceptable and no correction need be applied to the total volume of dry gas metered. If, however, a higher leakage rate is obtained, the test personnel shall either record the leakage rate and correct the sample volume as shown in para. B.6.4, or shall void the sampling run.

(e) Particulate Train Operation. During the sampling run, maintain an isokinetic sampling rate (within 10% of true isokinetic) and a temperature around the filter of 120° ±14°C (248° ±25°F), or such other temperature specified by the parties to the test.

For each run, record the data required on a data sheet such as the one shown in Table B.3. Be sure to record the initial dry gas meter reading.

Record the dry gas meter readings at the beginning and end of each sampling time increment, when changes in flow rates are made, before and after each leak check, and when sampling is halted. Take other readings required by Table B.3 at least once at each sample point during each time increment, and additional readings when significant changes (20% variation in velocity head readings) necessitate additional adjustments in flow rate. Level and zero the manometer. Because the manometer level and zero may drift due to vibrations and temperature changes, make periodic checks during the traverse.

Clean the porthole prior to the test run to minimize the chance of sampling deposited material. To begin sampling, remove the nozzle cap, verify that the filter and probe heating systems are up to temperature, and that the pitot tube and probe are properly positioned. Position the nozzle at the first traverse point with the tip pointing directly into the gas stream.

Immediately start the pump and adjust the flow to isokinetic conditions. Nomographs are available which aid in the rapid adjustment of the isokinetic sampling rate without excessive computations. These nomographs are designed for use when the Type S pitot tube coefficient is 0.85 ±0.02, and the stack gas equivalent density (dry molecular weight) is equal to 29 ±4. If C_p and M_d are outside the above stated ranges, do not use the nomographs unless appropriate steps are taken to compensate for the deviations.

When the stack is under significant negative pressure (height of impinger stem), take care to close the coarse-adjust valve before inserting the probe into the stack to prevent water from backing into the filter holder. If necessary, the pump may be turned on with the coarse-adjust valve closed.

When the probe is in position, block off the openings around the probe and porthole to prevent unrepresentative dilution of the gas stream.

Traverse the stack cross-section, as required by para. B.4.1*(b)(3), Circular Stacks,* being careful not to bump the probe nozzle into the stack walls when sampling near the walls or when removing or inserting the probe through the portholes; this minimizes the chance of extracting deposited material.

During the test run, make periodic adjustments to keep the temperature around the filter holder at the proper level; add more ice and, if necessary, salt to maintain a temperature of less than 20° C (68° F) at

Copyright ASME International
Provided by IHS under license with ASME
No reproduction or networking permitted without license from IHS
Not for Resale

TABLE B.3
PARTICULATE FIELD DATA

Plant .....
Location .....
Operator .....
Date .....
Run No. .....
Sample box No .....
Meter box No. .....
Meter ΔH@ .....
C factor .....
Pitot tube coefficient, Cp .....

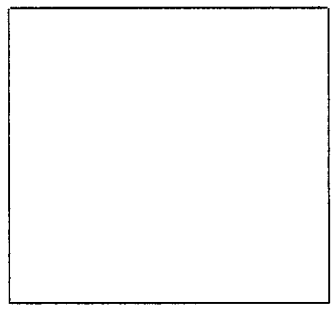

SCHEMATIC OF STACK CROSS SECTION

Ambient temperature .....
Barometric pressure .....
Assumed moisture, % .....
Probe length, m (ft.) .....
Nozzle identification No. .....
Average calibrated nozzle diameter, cm (in.) .....
Probe heater setting .....
Leak rate, m^3/min, (cfm) .....
Probe liner material .....
Static pressure, mm Hg (in. Hg) .....
Filter No. .....

Traverse point number	Sampling time	Vacuum	Stack temperature	Velocity head	Pressure differential across orifice meter	Gas sample volume	Gas sample temperature at dry gas meter		Filter holder temperature	Temperature of gas leaving condenser or last impinger
							Inlet	Outlet		
	(e). min.	mm Hg (in. Hg)	(T_s) °C (°F)	(ΔP_s) mm (in.) H_2O	mm H_2O (in. H_2O)	m^3 (ft^3)	°C (°F)	°C (°F)	°C (°F)	°C (°F)
Total							Avg.	Avg.		
Average							Avg.			

Copyright ASME International
Provided by IHS under license with ASME
No reproduction or networking permitted without license from IHS
Not for Resale

the condenser/silica gel outlet. Also, periodically check the level and zero of the manometer.

If the pressure drop across the filter becomes too high, thereby making isokinetic sampling difficult to maintain, the filter may be replaced in the midst of a sample run. It is recommended that another complete filter assembly be used rather than attempting to change the filter itself. Before a new filter assembly is installed, conduct a leak check (see para. B.4.1*(d)(2), Leak Checks During Sample Run*). The total particulate weight shall include the summation of all filter assembly catches.

A single train shall be used for the entire sample run, except in cases where simultaneous sampling is required in two or more separate ducts or at two or more different locations within the same duct or, where equipment failure necessitates a change of trains.

Note that when two or more trains are used, separate analyses of the front half and (if applicable) impinger catches from each train shall be performed, unless identical nozzle sizes were used on all trains, in which case the front half catches from the individual trains may be combined (as may the impinger catches) and one analysis of front half catch and one analysis of impinger catch may be performed.

At the end of the sample run, turn off the coarse-adjust valve, remove the probe and nozzle from the stack, turn off the pump, record the final dry gas meter reading, and conduct a post-test leak check, as outlined in para. B.4.1*(d)(3), Post-test Leak Check*.

(f) Calculation of Percent Isokinetic. Calculate percent isokinetic (see para. B.6) to determine whether the run was valid or another test run should be made.

B.4.2 Sample Recovery. Proper cleanup procedure begins as soon as the probe is removed from the stack at the end of the sampling period. Allow the probe to cool.

When the probe can be safely handled, wipe off all external particulate matter near the tip of the probe nozzle, and place a cap over it to prevent losing or gaining particulate matter. Do not cap off the probe tip tightly while the sampling train is cooling down as this will create a vacuum in the filter holder, thus drawing water from the impingers into the filter holder.

Before moving the sample train to the cleanup site, remove the probe from the sample train, wipe off the silicone grease, and cap the open outlet of the probe. Be careful not to lose any condensate that might be present. Wipe off the silicone grease from the filter inlet where the probe was fastened and cap it. Remove the umbilical cord from the last impinger and cap the impinger. If a flexible line is used between the first impinger or condenser and the filter holder, disconnect the line at the filter holder and let any condensed water or liquid drain into the impingers. After wiping off the silicone grease, cap off the filter holder outlet and impinger inlet. Either ground glass stoppers, plastic caps, or serum caps may be used to close these openings.

Transfer the probe and filter-impinger assembly to the cleanup area. This area should be clean and protected from the wind so that the chances of contaminating or losing the sample will be minimized.

Save a portion of the acetone used for cleanup as a blank. Take 200 ml of this acetone directly from the wash bottle being used and place it in a glass sample container labeled "acetone blank."

Inspect the train prior to and during disassembly and note any abnormal conditions. Treat the samples as follows.

(a) Container No. 1. Carefully remove the filter from the filter holder and place it in its identified petri dish container. Use a pair of tweezers and/or clean disposable surgical gloves to handle the filter. If it is necessary to fold the filter, do so such that the particulate cake is inside the fold. Carefully transfer to the petri dish any particulate matter and/or filter fibers which adhere to the filter holder gasket, by using a dry nylon bristle brush and/or a sharp-edged blade. Seal the container.

(b) Container No. 2. Taking care to see that dust on the outside of the probe or other exterior surfaces does not get into the sample, quantitatively recover particulate matter or any condensate from the probe nozzle, probe fitting, probe liner, and front half of the filter holder by washing these components with acetone and placing the wash in a glass container. Perform the acetone rinses in the following manner.

Carefully remove the probe nozzle and clean the inside surface by rinsing with acetone from a wash bottle and brushing with a nylon bristle brush. Brush until the acetone rinse shows no visible particles, after which make a final rinse of the inside surface with acetone.

Brush and rinse the inside parts of the compression fitting with acetone in a similar way until no visible particles remain.

Rinse the probe liner with acetone by tilting and rotating the probe while squirting acetone into its upper end so that all inside surfaces will be wetted with acetone. Let the acetone drain from the lower end into the sample container. A funnel (glass or polyethylene) may be used to aid in transferring liquid

Copyright ASME International
Provided by IHS under license with ASME
No reproduction or networking permitted without license from IHS
Not for Resale

washes to the container. Follow the acetone rinse with a probe brush. Hold the probe in an inclined position, squirt acetone into the upper end as the probe brush is being pushed with a twisting action through the probe; hold a sample container underneath the lower end of the probe, and catch any acetone and particulate matter which is brushed from the probe. Run the brush through the probe three times or more until no visible particulate matter is carried out with the acetone or until none remains in the probe liner on visual inspection. With stainless steel or other metal probes, run the brush through in the above prescribed manner at least six times, since metal probes have small crevices in which particulate matter can be entrapped. Rinse the brush with acetone, and quantitatively collect these washings in the sample container. After the brushing, make a final acetone rinse of the probe as described above.

It is recommended that two people be used to clean the probe to minimize sample losses. Between sampling runs, keep brushes clean and protected from contaminations.

After ensuring that all joints have been wiped clean of silicone grease, clean the inside of the front half of the filter holder by rubbing the surfaces with a nylon bristle brush and rinsing with acetone. Rinse each surface three times or more if needed to remove visible particulate. Make a final rinse of the brush and filter holder.

After all acetone washings and particulate matter have been collected in the sample container, tighten the lid on the sample container so that acetone will not leak out when it is shipped to the laboratory. Mark the height of the fluid level to determine whether or not leakage occured during transport. Label the container to clearly identify its contents.

(c) Container No. 3. If a moisture content analysis is to be done, weigh the first three impingers plus contents to the nearest 0.5 g and record this weight.

Also, weigh the spent silica gel (or silica gel plus impinger) to the nearest 0.5 g.

Transfer the solutions from the first and second impingers to a 1000 ml graduated cylinder. Rinse all connecting glassware (including back half of filter holder and third impinger) between the filter and silica gel impinger with deionized, distilled water, and add this rinse water to the cylinder. Dilute to a volume of 1000 ml with deionized, distilled water. Transfer the solution to a storage container. Mark the level of liquid on the container. Seal and identify the sample container.

B.4.3 Analysis. Handle each sample container in the following manner.

(a) Container No. 1. Leave the contents in the shipping container or transfer the filter and any loose particulate from the sample container to a tared glass weighing dish. Desiccate for 24 hours in a desiccator containing anhydrous calcium sulfate. Weigh to a constant weight and report the results to the nearest 0.1 mg. For purposes of this para., B.4.3, the term "constant weight" means a difference of no more than 0.5 mg or 1% of total weight less tare weight, whichever is greater, between two consecutive weighings, with no less than 6 hours of desiccation time between weighings.

Alternatively, the sample may be oven dried at 105°C (220°F) for 2 to 3 hours, cooled in the desiccator, and weighed to a constant weight. The parties to the test may also opt to oven dry the sample at 105°C (220°F) for 2 to 3 hours, weigh the sample, and use this weight as a final weight.

(b) Container No. 2. Note the level of liquid in the container and confirm on the analysis sheet whether or not leakage occurred during transport. If a noticeable amount of leakage has occurred, either void the sample or (use methods to) correct the final results. Measure the liquid in this container either volumetrically to ± 1 ml or gravimetrically to ± 0.5 g. Transfer the contents to a tared 250 ml beaker and evaporate to dryness at ambient temperature and pressure. Desiccate for 24 hours and weigh to a constant weight. Report the results to the nearest 0.1 mg.

(c) Container No. 3. Note the level of liquid in the container and confirm on the analysis sheet whether or not leakage occurred during transport. If a noticeable amount of leakage occurred, either void the sample or use methods to correct the final results.

Thoroughly mix the solution in the container holding the contents of the first and second impingers. Pipette a 10 ml aliquot of sample into a 250 ml Erlenmeyer flask.

Add 40 ml of isopropanol, 2 to 4 drops of thorin indicator, and titrate to a pink endpoint using 0.0100 N barium perchlorate. Repeat the titration with a second aliquot of sample and average the titration values. Replicate titrations must agree within 1% or 0.2 ml, whichever is greater.

(d) Blanks

(1) "Acetone Blank" Container. Measure acetone in this container either volumetrically or gravimetrically. Transfer the acetone to a tared 250 ml beaker and evaporate to dryness at ambient temperature and pressure. Desiccate for 24 hours and weigh to a constant weight. Report the results to the nearest 0.1 mg.

Copyright ASME International
Provided by IHS under license with ASME
No reproduction or networking permitted without license from IHS
Not for Resale

(2) SO_2 Blanks. Prepare SO_2 blanks by pipetting a 10 ml aliquot of the hydrogen peroxide blank solution into a 250 ml Erlenmeyer flask. Add 40 ml of isopropanol. Analyze as in para. B.4.3 *(c), Container No. 3.*

B.5 Calibration. Maintain a laboratory log of all calibrations.

B.5.1 Probe Nozzle. Probe nozzles shall be calibrated before their initial use in the field. Using a micrometer, measure the inside diameter of the nozzle to the nearest 0.025 mm (0.001 in.). Make three separate measurements using different diameters each time, and obtain the average of the measurements. The difference between the high and low numbers shall not exceed 0.1 mm (0.004 in.). When nozzles become nicked, dented, or corroded, they shall be reshaped, sharpened, and recalibrated before use. Each nozzle shall be permanently and uniquely identified.

B.5.2 Pitot Tube. The Type S pitot tube assembly need not be calibrated if constructed as described in para. B.2*(c)* of this method.

B.5.3 Metering System. Before its initial use in the field, the metering system shall be calibrated at five different flow rates (e.g., 0.2, 0.4, 0.6, 0.8, and 1.0 scfm) against a wet test meter. Instead of physically adjusting the dry gas meter dial readings to correspond to the wet test meter readings, calibration factors may be used to mathematically correct the gas meter dial readings to the proper values. Before calibrating the metering system, it is suggested that a leak check be conducted. For metering systems having diaphragm pumps, the normal leak check procedure will not detect leakages within the pump. For these cases, the following leak check procedure is suggested: Make a 10 minute calibration run at 0.0057 m^3/min (0.02 cfm); at the end of the run, take the difference of the measured wet test meter and dry gas meter volumes; divide the difference by 10 to get the leak rate. The leak rate should not exceed 0.00057 m^3/min (0.02 cfm).

After each field use, the calibration of the metering system shall be checked by performing three calibration runs at a single, intermediate orifice setting (based on the previous field test), with the vacuum set at the maximum value reached during the test series. To adjust the vacuum, insert a valve between the wet test meter and the inlet of the metering system. Calculate the average value of the calibration factor. If the calibration has changed by more than 5%, recalibrate the meter over the full range of flow rates.

Note: If the dry gas meter coefficient values obtained before and after a test series differ by more than 5%, the test series shall either be voided, or calculations for test series shall be performed using whichever meter coefficient value (i.e., before or after) gives the lower value of total sample volume.

B.5.5 Temperature Gages. Dial thermometers, such as are used for the dry gas meter and condenser outlet, shall be calibrated against mercury-in-glass thermometers.

B.5.6 Leak Check of Metering System. Shown in Fig. B.1. That portion of the sampling train from the pump to the orifice meter should be leak checked prior to initial use and after each shipment. Leakage after the pump will result in less volume being recorded than is actually sampled. The following procedure is suggested: Close the main valve on the meter box. Insert a one hole rubber stopper with rubber tubing attached into the orifice exhaust pipe. Disconnect and vent the low side of the orifice manometer. Close off the low side orifice tap. Pressurize the system to a 13 to 18 cm (5 to 7 in.) water column by blowing into the rubber tubing. Pinch off the tubing and observe the manometer for one minute. A loss of pressure on the manometer indicates a leak in the meter box; leaks, if present, must be corrected.

B.5.7 Barometer. Calibrate against a mercury barometer.

B.5.8 Barium Perchlorate Solution. Standardize the barium perchlorate solution against 25 ml of standard sulfuric acid to which 100 ml of 100 percent isopropanol has been added. Run duplicate analyses. Calculate the normality using the average of a pair of duplicate analyses where the titrations agree within 1 percent or 0.2 ml which ever is larger.

B.6 CALCULATIONS

Carry out calculations, retaining at least one extra decimal figure beyond that of the acquired data. Round off figures after the final calculation. Other forms of the equations may be used as long as they give equivalent results.

See Section 2 of this Code for definitions of terms.

B.6.1 Isokinetic Variations. (Acceptable isokinetic rate is achieved if $90\% < I < 110\%$).

Copyright ASME International
Provided by IHS under license with ASME
No reproduction or networking permitted without license from IHS
Not for Resale

$$I = \frac{100\, T_s\, [K_5\, V_{lc} + (P_m/T_m)(P_{bar} + \frac{\Delta H}{13.6})]}{60\, t\, p_s\, A_n}$$

where K_5 is the isokinetic equation constant.

$$K_5 = 0.003454\, \frac{(\text{mm Hg})\ (m^3)}{(\text{ml})\ K}$$

for customary metric units

$$= 0.002669\, \frac{(\text{in. Hg})\ (\text{ft}^3)}{(\text{ml})\ (R)}$$

for customary industry units

B.6.2 SO_2 Concentration. (See para. 5.1 of this Code)

B.6.3 Particulate Concentration.

$$C_s = \frac{m_n}{V_{m(std)}}$$

where

C_s = Particulate concentration (mg/m^3)
m_n = Sum of particulate matter collected on filter and acetone washes, less blanks (mg)

B.6.4 Meter Volume Correction. Equation 5.3 of this Code may be used as written unless the leakage rate observed during any of the mandatory leak checks (i.e. the post-test leak check or leak checks conducted prior to component changes) exceeds 0.00057 m^3/min (0.02 cfm) or 4 percent of the average sampling rate, whichever is less. If the acceptable leak rate limit is exceeded, equation 5.3 must be modified as follows:

(a) Case I. No component changes made during sampling run. In this case, replace V_m in Eq. (5.3) with the expression

$$V_m - (l_p - l_a)t$$

where

l_p = leakage rate observed during the post-test leak check, m^3/min (cfm)
l_a = leakage rate limit, 0.00057 m^3/min (0.002 cfm) or 4 percent of average sampling rate, whichever is larger

(b) Case II. One or more component changes made during the sampling run. In this case, replace V_m in Eq. (4.3) with the expression

$$V_m - [\sum_{i=1}^{n} (l_i - l_a)\, t_i] - (l_p - l_a)t_p$$

where

l_i = individual leakage rate observed during the ith component change (i = 1, 2, . . .,n), m^3/min (cfm)
t_i = sampling time interval between start of sampling run and first component change or time interval between two component changes, min
t_p = sampling time interval from final (nth) component change and end of sampling run, min

Copyright ASME International
Provided by IHS under license with ASME
No reproduction or networking permitted without license from IHS
Not for Resale

APPENDIX C
FGD DATA DETERMINATION FORMS

Copyright ASME International
Provided by IHS under license with ASME
No reproduction or networking permitted without license from IHS
Not for Resale

TABLE C.1
FIELD MOISTURE DETERMINATION DATA FORM

Plant.....
Location.....
Operator.....
Date.....
Run No.....
Ambient Temperature.....
Barometric Pressure.....
Probe Length m(ft.).....

	Impinger Volume ml	Silica Gel Weight g
Final		
Initial		
Difference		

SCHEMATIC OF STACK CROSS SECTION

Traverse Point Number	Sampling Time (θ), min.	Stack Temperature °C (°F)	Pressure Differential Across Orifice Meter (ΔH), mm(in.) H_2O	Meter Reading Gas Sample Volume m^3 (ft^3)	ΔV_m m^3 (ft^3)	Gas Sample Temperature At Dry Gas Meter		Temperature of Gas Leaving Condenser or Last Impinger °C(°F)
						Inlet (Tm_{in}), °C (°F)	Outlet (Tm_{out}), °C(°F)	
TOTAL						Avg.	Avg.	
AVERAGE						Avg.		

Copyright ASME International
Provided by IHS under license with ASME
No reproduction or networking permitted without license from IHS
Not for Resale

TABLE C.2
FIELD MOLECULAR WEIGHT DETERMINATION DATA FORM

PLANT .....
DATE .....
SAMPLING TIME (24 hr CLOCK) .....
SAMPLING LOCATION .....
SAMPLE TYPE (BAG, INTEGRATED, CONTINUOUS) .....
ANALYTICAL METHOD .....
AMBIENT TEMPERATURE .....
OPERATOR .....

COMMENTS:

Gas \ Run	1		2		3		Average Net Volume	Multiplier	Molecular Weight of Stack Gas (Dry Basis) M_d, lb/lb-mole
	Actual Reading	Net	Actual Reading	Net	Actual Reading	Net			
CO_2								$^{44}/_{100}$	
O_2(Net is actual O_2 reading minus actual CO_2 reading)								$^{32}/_{100}$	
CO (Net is actual CO reading minus actual O_2 reading)								$^{28}/_{100}$	
N_2 (Net is 100 minus actual CO reading)								$^{28}/_{100}$	
								Total	

Copyright ASME International
Provided by IHS under license with ASME
No reproduction or networking permitted without license from IHS
Not for Resale

TABLE C.3
FIELD GAS VELOCITY DETERMINATION DATA FORM

Plant.....
Date..... Run No. .....
Stack Diameter or Dimensions, m (in.) .....
Barometric Pressure, mm Hg (in. Hg) .....
Cross Sectional Area, $m^2(ft^2)$ .....
Operators.....
Pitot Tube I.D. No.....
Avg. Coefficient, C_p = ...
Last Date Calibrated.....

SCHEMATIC OF STACK CROSS SECTION

Traverse Pt. No.	Vel. Hd., Δp mm (in.) H_2O	Stack Temperature		P_g mm Hg (in. Hg)	$\sqrt{\Delta p}$
		t_s°C (°F)	T_s°K (°R)		
		Average			

Copyright ASME International
Provided by IHS under license with ASME
No reproduction or networking permitted without license from IHS
Not for Resale

TABLE C.4
FIELD SO_2 DETERMINATION DATA FORM

Plant	Probe length	Sheet of
Location	Probe liner material	Nozzle identification number
Operator	Probe heater setting	Nozzle diameter
Date	Ambient temperature	Final leak rate
Run number	Barometric pressure	Vacuum during leak check
Sample box number	Assumed moisture	Remarks:
Meter box number	Static pressure	
Meter ΔH@	C factor	
Meter calibration Y	Reference Δp	
Pitot tube C_p	Maximum ΔH	

Traverse point number	Sampling time (θ), min	Clock time 24 h	Vacuum, mm Hg (in. Hg)	Stack temperature (T_s), °C(°F)	Velocity head (Δp_s), mm H_2O (in. H_2O)	Pressure differential across orifice meter, mm H_2O (in. H_2O)	Gas sample volume, m^3 (ft^3)	Gas sample temperature at dry gas meter		Temperature of gas leaving condenser or last impinger, °C (°F)
								Inlet, °C (°F)	Outlet, °C (°F)	
Total or Avg.										

Copyright ASME International
Provided by IHS under license with ASME
No reproduction or networking permitted without license from IHS
Not for Resale

TABLE C.5
FIELD ANALYSIS FOR SO_2 DETERMINATION DATA FORM

Plant _____ Date _____

Sample location _____ Analyst _____

Volume and normality of barium perchlorate

1. _____ml $Ba(ClO_4)_2$
2. _____ml $Ba(ClO_4)_2$
Blank _____ml $Ba(ClO_4)_2$

N = _____

Sulfur Dioxide Analysis

		Run 1	Run 2	Run 3
V_{soln} - Total volume of solution in which the sulfur dioxide sample is contained, ml				
V_a - Volume of sample aliquot, ml				
V_t - Volume of barium perchlorate titrant used for sample, ml	1st titration			
	2nd titration			
	Average			
V_{tb} [Note (1)] - Volume of barium perchlorate titrant used for blank, ml	1st titration			
	2nd titration			
	Average			

$$\frac{\text{1st titration}}{\text{2nd titration}} = 0.99 \text{ to } 1.01 \text{ or } |\text{1st titration} - \text{2nd titration}| \leq 0.2 \text{ ml}$$

Signature of analyst _____

Signature of reviewer or supervisor _____

NOTE:

1. Volume of blank and sample titrated should be the same; otherwise a volume correction must be made.

Copyright ASME International
Provided by IHS under license with ASME
No reproduction or networking permitted without license from IHS
Not for Resale

TABLE C.6
REAGENT CHARACTERIZATION

Run _____
Date _____
Plant _____
Flowrate Measurement Method _____
Reagent Holding Tank Volume per Foot of Tank Height (V_T) _____

Flow Measurement

Time	Tank Level	Vessel _____	Vessel _____	Vessel _____	Vessel _____	Vessel _____
t_i =	L_i =					
t_f =	L_f =					

Avg. Measured Flow = _____ _____ _____ _____ _____ $\sum$ = _____

Avg. Level Drop Flow = $\frac{(L_i - L_f)V_t}{t_i - t_f} = Q_s$

Sample Analysis

Bottle Tag _____
% Solids _____
Sp. Gravity _____ $= \frac{1}{\rho_s}$

Reagent	Wt percent (% r)	M_r	$G_r = \frac{Q_s(\%r)\rho_s}{M_r K_6}$

$G_{rt} = \sum G_r$ = _____

Copyright ASME International
Provided by IHS under license with ASME
No reproduction or networking permitted without license from IHS
Not for Resale

APPENDIX D
QUANTITY MEASUREMENT OF SOLID WASTE

D.1 PRINCIPLES AND APPLICABILITY

For the purpose of this Code, solids are assumed to be measured as weight per unit time. While specifically addressing the quantity of waste product generated, this Appendix can be used to measure the quantity of any powder generated in an FGDS.

Commercial methods for measuring quantities of dry, free-flowing powders involve the use of weigh belts, weigh hoppers, and load cells on storage tanks or beam gages which measure strain as a function of stress or load applied. Most FGDS which use dry powders as reagent have some method of metering dry products which use one or more of the devices listed above.

Measuring waste products is a monumental task. Not only do they include reacted material from the FGDS but fly ash, bottom ash, stabilizers, or hardeners may also be present. There is always more waste to dispose of than of the reactant which was used to eliminate the SO_2 produced in the process. In addition, the product may contain waters of hydration and absorbed or adsorbed moisture.

D.2 MASS BALANCE METHOD

For simple once-through FGD systems — if enough is known about the compositions of the inlet gas stream, reagent stream, and exhaust gas stream — the quantity of waste generated can be approximated by a mass balance around the system as demonstrated in Fig. D.1 where

$$m_w = [m_i (SO_2)_i] + m_r - [m_o (SO_2)_o]$$

where

m_r = Mass of reagent per unit time
m_i = Mass of flue gas in per unit time
$(SO_2)_i$ = Percent concentration of SO_2 in
m_o = Mass of flue gas out per unit time

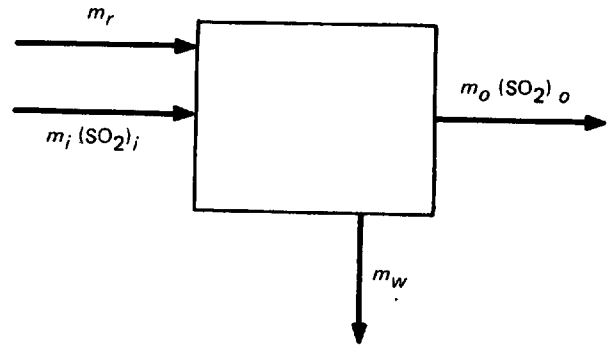

FIG. D.1 MASS BALANCE AROUND THE FGDS

$(SO_2)_o$ = Percent concentration of SO_2 out
m_w = Mass of waste generated per unit time

Other more complex systems, which have particulate-laden gas streams and/or variable removal rate devices, complicate the above analysis making it more difficult to accurately calculate the flow of waste. Most systems to which this Code is applicable unfortunately fall into the second category. For these systems, a direct method measuring the quantity of waste product is needed.

D.3 BULK DENSITY METHODS

An approximation of the weight of waste products based upon apparent bulk density of the solids can be made using an alternate method. In this method, the amount of waste product generated can be determined by measuring the amount of time it takes to fill a truck or other larger container of known volume. Samples of the material are taken to determine bulk density in accordance with ASME PTC 28. The amount of waste per unit time can be determined by multiplying the volume by the apparent bulk density and dividing by the time it takes to fill the container.

Copyright ASME International
Provided by IHS under license with ASME
No reproduction or networking permitted without license from IHS
Not for Resale

In this case

$$m_w = \frac{(Volume)\ (\rho)}{t}$$

where

m_w = Mass of waste generated
Volume = Volume of container into which the waste is placed
t = Time needed to fill the container
ρ = Bulk density of waste material

This method is only a rough approximation, but in the absence of a weigh scale it can give acceptable results if the quantities are sufficiently large. Care should be exercised in keeping the samples from compacting in storage for bulk density determination.

D.4 WEIGH SCALE METHOD

The best method for determining waste product quantities requires the use of available weigh scale or other device capable of weighing a closed container of waste product. A schematic of this is shown in Fig. D.2. In this case, the quantity produced is measured directly by measuring the material from a closed storage container as it was filled.

D.5 OTHER FACTORS

If the waste product is not a dry, free-flowing powder, quantitative measurement of the amount generated can proceed as above, but qualitative determination of the amount of moisture in the product must be made. See paras. 4.2.2*(d), Chemical Analysis* and 4.2.2*(e), Parameters of Interest* for details. Proper sampling techniques and analytical techniques must be used to prevent sample bias. These items should be agreed upon prior to the start of any test.

In planning strategy to determine the quantities of dry waste product, existing process instrumentation should be used whenever possible.

Weigh scales and belts, weigh hoppers, and similar devices should be calibrated at the manufacturer's recommended intervals.

Copyright ASME International
Provided by IHS under license with ASME
No reproduction or networking permitted without license from IHS
Not for Resale

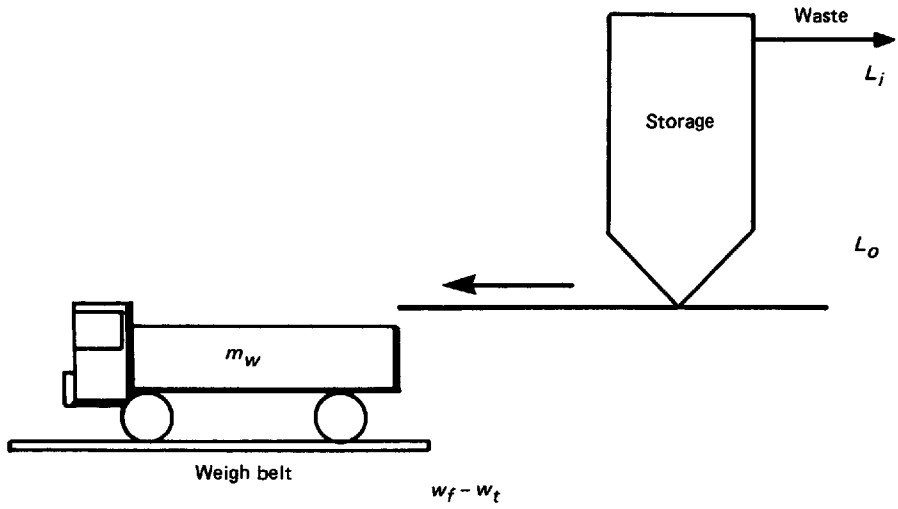

$$m_w = \frac{(w_f - w_t)}{t}$$

where

t = time to fill storage tank from level L_o to L_i
w_f = final truck weight
w_t = truck tare weight
m_w = mass of waste product per unit time

FIG. D.2 THE WEIGH SCALE METHOD

Copyright ASME International
Provided by IHS under license with ASME
No reproduction or networking permitted without license from IHS
Not for Resale

APPENDIX E
EXAMPLE APPLICATION

In applying this Code to a real system, the drawing of the system boundary around the components is a critical first step. In Fig. E.1 is a process schematic for a typical lime/limestone wet scrubbing system. A boundary has been drawn around the system in Fig. E.2 and the inputs and outputs labeled.

In setting the boundaries, consideration must be given to measurement provisions and the physical characteristics of the system. For instance, when the reagent flow must be determined and if the level drop method of flow determination is to be used, the boundary will be at the reagent tank. If flow meters are employed, then the boundary will be at the flow meters. The same holds true for the exit gas measurements.

In most cases, measurement provisions are included in the stack but measurements could occur in the ductwork. Makeup water should be measured at the boundary where possible. Electrical energy can be measured for individual components, such as the ID fan, or for the system as a whole depending on the requirements of the test.

The identification of the boundary line should be formalized in a test plan as developed by the parties to the test. Such a plan should outline the reasons for choosing the proposed boundary and the interface measuring methods.

In a closed loop system, it is generally more economical to calculate reagent ratio based on a waste composition rather than by measuring all the inlet streams, compositions, etc. This may reduce cumulative errors. For this purpose, closed loop is defined as when the only water leaving the FGDS is through the flue gas and the waste/by-product.

Copyright ASME International
Provided by IHS under license with ASME
No reproduction or networking permitted without license from IHS
Not for Resale

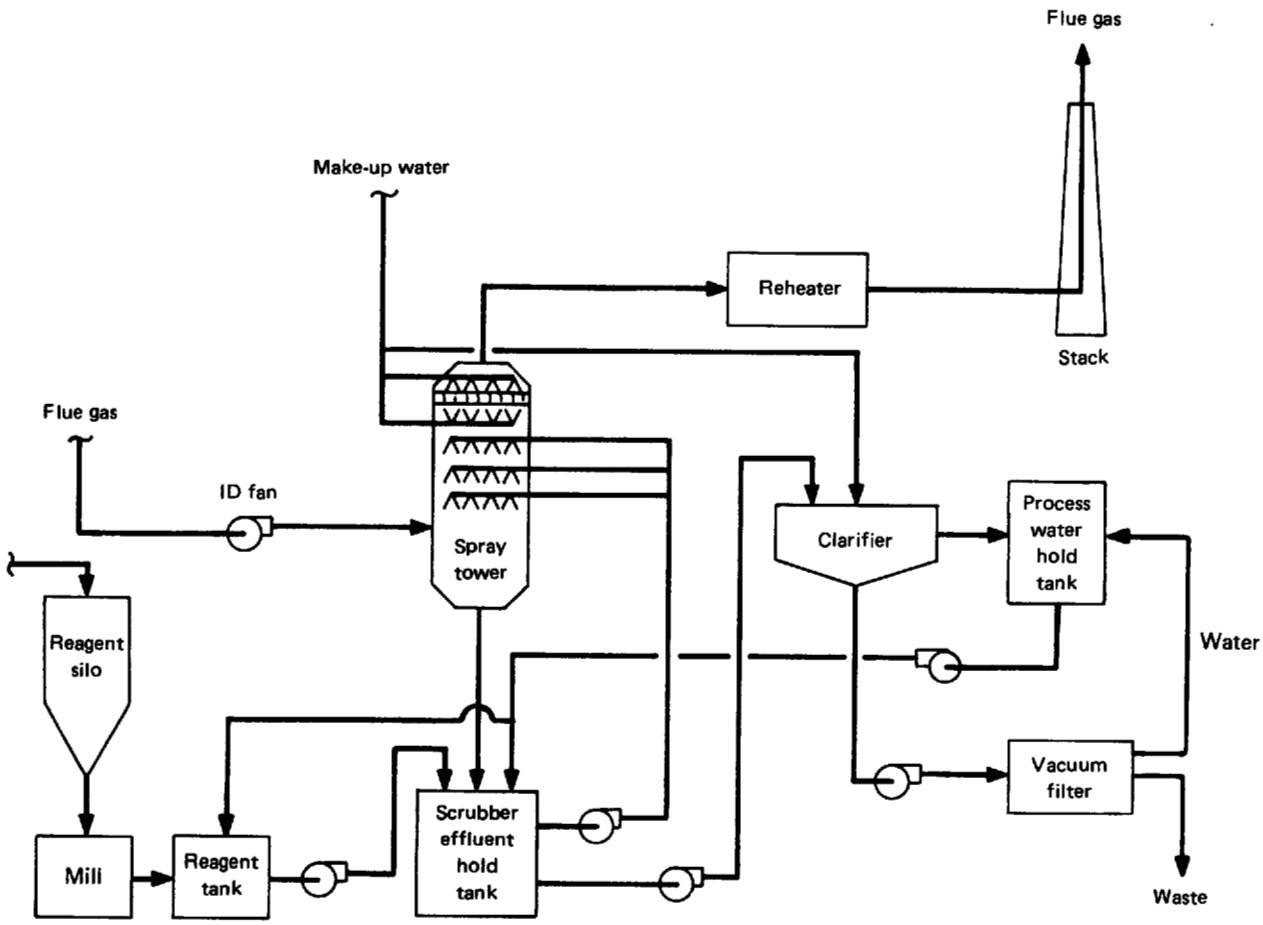

FIGURE E.1
TYPICAL LIME/LIMESTONE SYSTEM

Copyright ASME International
Provided by IHS under license with ASME
No reproduction or networking permitted without license from IHS
Not for Resale

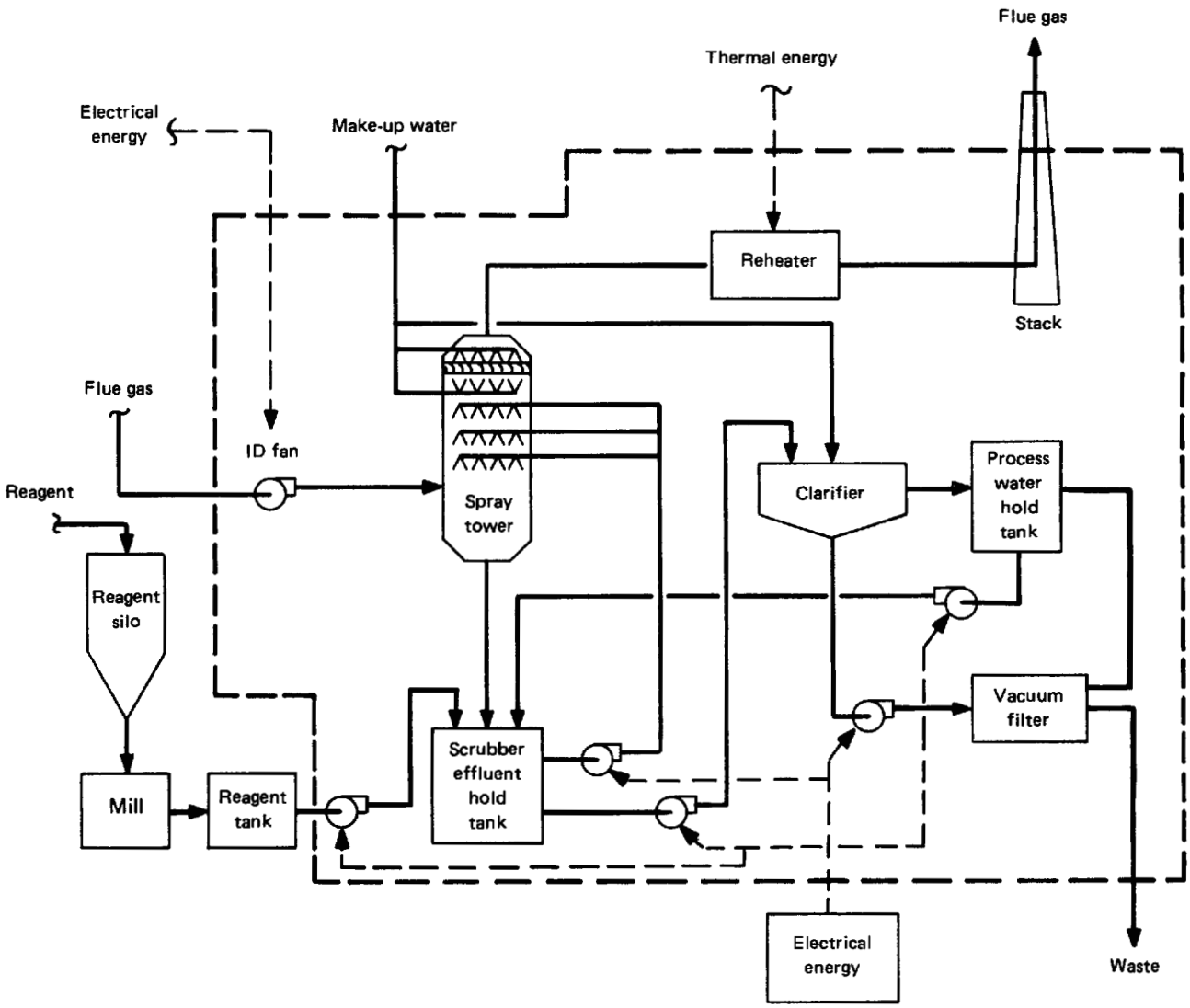

FIGURE E.2
EXAMPLE TEST BOUNDARY

Copyright ASME International
Provided by IHS under license with ASME
No reproduction or networking permitted without license from IHS
Not for Resale

COMPLETE LISTING OF ASME PERFORMANCE TEST CODES

PTC 1 — General Instructions 1991
PTC 2 — Definitions and Values 1980
(R1985)
PTC 3.1 — Diesel and Burner Fuels 1958
(R1985)
PTC 3.2 — Solid Fuels 1954
(R1984)
PTC 3.3 — Gaseous Fuels 1969
(R1985)
PTC 4.1 — Steam-Generating Units (With 1968 and 1969 Addenda) 1964
(R1991)
Diagram for Testing of a Steam Generator, Fig. 1 (Pad of 100)
Heat Balance of a Steam Generator, Fig. 2 (Pad of 100)
PTC 4.1a — ASME Test Form for Abbreviated Efficiency Test — Summary Sheet (Pad of 100) 1964
PTC 4.1b — ASME Test for Abbreviated Efficiency Test — Calculation Sheet (Pad of 100) 1964
PTC 4.2 — Coal Pulverizers 1969
(R1991)
PTC 4.3 — Air Heaters 1968
(R1991)
PTC 4.4 — Gas Turbine Heat Recovery Steam Generators 1981
(R1987)
PTC 5 — Reciprocating Steam Engines 1949
PTC 6 — Steam Turbines 1976
(R1991)
PTC 6A — Appendix A to Test Code for Steam Turbines (With 1958 Addenda) 1982
PTC 6 Report — Guidance for Evaluation of Measurement Uncertainty in Performance Tests of Steam Turbines 1985
(R1991)
PTC 6S Report — Procedures for Routine Performance Tests of Steam Turbines 1988
PTC 6.1 — Interim Test Code for an Alternative Procedure for Testing Steam Turbines 1984
PTC 6 on Steam Turbines — Interpretations 1977—1983
PTC 7 — Reciprocating Steam-Driven Displacement Pumps 1949
(R1969)
PTC 7.1 — Displacement Pumps 1962
(R1969)
PTC 8.2 — Centrifugal Pumps 1990

Copyright ASME International
Provided by IHS under license with ASME
No reproduction or networking permitted without license from IHS
Not for Resale

PTC 9 — Displacement Compressors, Vacuum Pumps and Blowers (With 1972 Errata) 1970 (R1985)
PTC 10 — Compressors and Exhausters 1965 (R1986)
PTC 11 — Fans 1984 (R1990)
PTC 12.1 — Closed Feedwater Heaters 1978 (R1987)
PTC 12.2 — Steam-Condensing Apparatus 1983
PTC 12.3 — Deaerators 1977 (R1990)
PTC 14 — Evaporating Apparatus 1970 (R1991)
PTC 16 — Gas Producers and Continuous Gas Generators 1958 (R1991)
PTC 17 — Reciprocating Internal-Combustion Engines 1973 (R1991)
PTC 18 — Hydraulic Prime Movers 1949
PTC 18.1 — Pumping Mode of Pump/Turbines 1978 (R1984)
PTC 19.1 — Measurement Uncertainty 1985
PTC 19.2 — Pressure Measurement 1987
PTC 19.3 — Temperature Measurement 1974 (R1986)
PTC 19.5 — Application, Part II of Fluid Meters: Interim Supplement on Instruments and Apparatus 1972
PTC 19.5.1 — Weighing Scales 1964
PTC 19.6 — Electrical Measurements in Power Circuits 1955
PTC 19.7 — Measurement of Shaft Power 1980
PTC 19 8 — Measurement of Indicated Horsepower 1970 (R1985)
PTC 19.10 — Flue and Exhaust Gas Analyses 1981
PTC 19.11 — Water and Steam in the Power Cycle (Purity and Quality, Lead Detection and Measurement) 1970
PTC 19.12 — Measurement of Time 1958
PTC 19.13 — Measurement of Rotary Speed 1961
PTC 19.14 — Linear Measurements 1958
PTC 19.16 — Density Determinations of Solids and Liquids 1965
PTC 19.17 — Determination of the Viscosity of Liquids 1965
PTC 19.22 — Digital Systems Techniques 1986
PTC 19.23 — Guidance Manual for Model Testing 1980 (R1985)
PTC 20.1 — Speed and Load Governing Systems for Steam Turbine-Generator Units 1977 (R1988)
PTC 20.2 — Overspeed Trip Systems for Steam Turbine-Generator Units 1965 (R1986)
PTC 20.3 — Pressure Control Systems Used on Steam Turbine-Generator Units 1970 (R1979)

Copyright ASME International
Provided by IHS under license with ASME
No reproduction or networking permitted without license from IHS
Not for Resale

PTC 21 — Particulate Matter Collection Equipment 1991
PTC 22 — Gas Turbine Power Plants 1985
PTC 23 — Atmospheric Water Cooling Equipment 1986
PTC 23.1 — Spray Cooling Systems 1983
PTC 24 — Ejectors 1976 (R1982)
PTC 25.3 — Safety and Relief Valves 1988
PTC 26 — Speed-Governing Systems for Internal Combustion Engine-Generator Units 1962
PTC 28 — Determining the Properties of Fine Particulate Matter 1965 (R1985)
PTC 29 — Speed Governing Systems for Hydraulic Turbine-Generator Units 1965 (R1985)
PTC 30 — Air Cooled Heat Exchangers 1991
PTC 31 — Ion Exchange Equipment 1973 (R1991)
PTC 32.1 — Nuclear Steam Supply Systems 1969 (R1985)
PTC 32.2 — Methods of Measuring the Performance of Nuclear Reactor Fuel in Light Water Reactors 1979 (R1986)
PTC 33 — Large Incinerators 1978 (R1991)
PTC 33a — Appendix to PTC 33-1978 — ASME Form for Abbreviated Incinerator Efficiency Test (Form PTC 33a-1980) 1980 (R1987)
PTC 36 — Measurement of Industrial Sound 1985
PTC 38 — Determining the Concentration of Particulate Matter in a Gas Stream 1980 (R1985)
PTC 39.1 — Condensate Removal Devices for Steam Systems 1980 (R1985)
PTC 40 — Flue Gas Desulfurization Units 1991
PTC 42 — Wind Turbines 1988

The Philosophy of Power Test Codes and Their Development

Copyright ASME International
Provided by IHS under license with ASME
No reproduction or networking permitted without license from IHS
Not for Resale

PERFORMANCE TEST CODES

A complete list of all Performance Test Codes appears at the end of this book.

While providing for exhaustive tests, these Codes are so drawn that selected parts may be used for tests of limited scope.

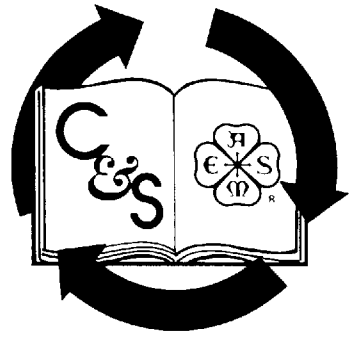

This document is printed on 50% recycled paper.

50% RECOVERED PAPER MATERIAL means paper waste generated after the completion of the papermaking process, such as postconsumer materials, text books, envelopes, bindery waste, printing waste, cutting and converting waste, butt rolls, obsolete inventories, and rejected unused stock.

ISBN #0-7918-2088-9

C05891

Copyright ASME International
Provided by IHS under license with ASME
No reproduction or networking permitted without license from IHS

Not for Resale