STD.ASME PTC 4-ENGL 1998 0759670 0614935 495

AN AMERICAN NATIONAL STANDARD

ASME
PTC 4-1998
[Revision of ASME PTC 4.1-1964(R1991)]

Fired Steam Generators

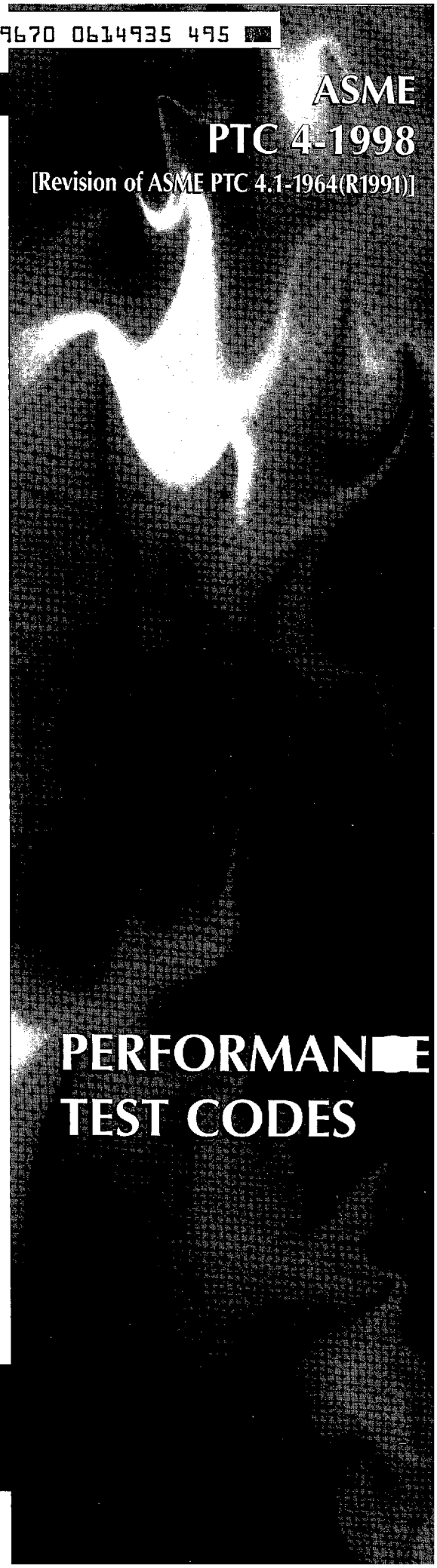

PERFORMANCE TEST CODES

The American Society of Mechanical Engineers

Copyright ASME International
Provided by IHS under license with ASME
No reproduction or networking permitted without license from IHS
Not for Resale

AN AMERICAN NATIONAL STANDARD

ASME
PTC 4-1998
[Revision of ASME PTC 4.1-1964(R1991)]

Fired Steam Generators



The American Society of Mechanical Engineers

PERFORMANCE TEST CODES

Copyright ASME International
Provided by IHS under license with ASME
No reproduction or networking permitted without license from IHS

Not for Resale

Date of Issuance: December 31, 1999

This document will be revised when the Society approves the issuance of a new edition. There will be no Addenda issued to ASME PTC 4-1998.

Please Note: ASME issues written replies to inquiries concerning interpretation of technical aspects of this document. The interpretations are not part of the document. ASME PTC 4-1998 is being issued with an automatic subscription service to the interpretations that will be issued to it up to the publication of the next edition.

ASME is the registered trademark of The American Society of Mechanical Engineers.

This code or standard was developed under procedures accredited as meeting the criteria for American National Standards. The Consensus Committee that approved the code or standard was balanced to assure that individuals from competent and concerned interests have had an opportunity to participate. The proposed code or standard was made available for public review and comment that provides an opportunity for additional public input from industry, academia, regulatory agencies, and the public-at-large.

ASME does not "approve," "rate," or "endorse" any item, construction, proprietary device, or activity.

ASME does not take any position with respect to the validity of any patent rights asserted in connection with any items mentioned in this document, and does not undertake to insure anyone utilizing a standard against liability for infringement of any applicable Letters Patent, nor assume any such liability. Users of a code or standard are expressly advised that determination of the validity of any such patent rights, and the risk of infringement of such rights, is entirely their own responsibility.

Participation by federal agency representative(s) or person(s) affiliated with industry is not to be interpreted as government or industry endorsement of this code or standard.

ASME accepts responsibility for only those interpretations of this document issued in accordance with the established ASME procedures and policies, which preclude the issuance of interpretations by individuals.

No part of this document may be reproduced in any form,
in an electronic retrieval system or otherwise,
without the prior written permission of the publisher.

The American Society of Mechanical Engineers
Three Park Avenue, New York, NY 10016-5990

Copyright © 1999 by
THE AMERICAN SOCIETY OF MECHANICAL ENGINEERS
All Rights Reserved
Printed in U.S.A.

Copyright ASME International
Provided by IHS under license with ASME
No reproduction or networking permitted without license from IHS

Not for Resale

FOREWORD

The Test Code for Stationary Steam Generating Units was one of the group of 10 forming the 1915 Edition of the ASME Power Test codes. A revision of these codes was begun in 1918 and the Test Code for Stationary Steam Generating Units was reissued in revised form in October 1926. Further revisions were issued in February 1930 and January 1936.

In October 1936 the standing Power Test Code Committee requested Committee No. 4 to consider a revision of the Code to provide for heat balance tests on large steam generating units. In rewriting the Code advantage was taken of the experience of the several companies in the utility field which had developed test methods for large modern units including the necessary auxiliary equipment directly involved in the operation of the units. At the same time the needs of the small installations were not overlooked. At the November 3, 1945, meeting of the standing Power Test Codes Committee, this revision was approved and on May 23, 1946, the Code was approved and adopted by the Council.

In view of the continuously increasing size and complexity of steam generating units, it was obvious that changes were required in the 1946 Edition of the Test Code. In May 1958 the technical committee was reorganized to prepare this revision. The completely revised Code, the Test Code for Steam Generating Units, was approved by the Power Test Codes Committee on March 20, 1964. It was further approved and adopted by the Council as a standard practice of the Society by action of the Board on Codes and Standards on June 24, 1964.

The Board on Performance Test Codes (BPTC) in 1980 directed that the Code be reviewed to determine whether it should be revised to reflect current engineering practices. A committee was soon formed and it had its first meeting in May 1981. The Committee soon recognized that the Code should be totally rewritten to reflect several changes in steam generator technology (primarily the increasing usage of fluidized bed combustors and other technologies for emission control) and in performance testing technology (primarily the widespread use of electronic instrumentation and the consideration of test uncertainty analysis as a tool for designing and measuring the quality of a performance test). The Committee decided that the new code should discourage the almost universal use of an abbreviated test procedure (commonly known as "The Short Form"). The Committee reasoned that the best test is that which requires the parties to the test to deliberate on the scope of the performance test required to meet the objective(s) of the test. Measurement uncertainty analysis was selected as the tool whereby the parties could design a test to meet these objectives. As this Code will be applied to a wide configuration of steam generators, from small industrial and commercial units to large utility units, the soundness of this philosophy should be self-evident.

This expanded edition of the Code was retitled Fired Steam Generators to emphasize its limitation to steam generators fired by combustible fuels. The Code was subjected to a thorough review by Industry, including members of the BPTC. Many of their comments were incorporated and the Committee finally approved the Code on June 23, 1998. It was then approved and adopted by the Council as a Standard practice of the Society by action of the Board on Performance Test Codes on August 3, 1998. It was also approved as an American National Standard by the ANSI Board of Standards Review on November 2, 1998.

Calculations associated with the application of this Code can be facilitated by the use of computer software. Software programs that support calculations for this Code may be available on the ASME web site (www.asme.org/pdf). Any such software has not been subject to the ASME consensus process and ASME makes no warranties, express or implied, including, without limitation, the accuracy or applicability of the program.

Copyright ASME International
Provided by IHS under license with ASME
No reproduction or networking permitted without license from IHS
Not for Resale

NOTICE

All Performance Test Codes **MUST** adhere to the requirements of **PTC 1, GENERAL INSTRUCTIONS.** The following information is based on that document and is included here for emphasis and for the convenience of the user of this Code. It is expected that the Code user is fully cognizant of Parts I and III of PTC 1 and has read them prior to applying this Code.

ASME Performance Test Codes provide test procedures which yield results of the highest level of accuracy consistent with the best engineering knowledge and practice currently available. They were developed by balanced committees representing all concerned interests. They specify procedures, instrumentation, equipment operating requirements, calculation methods, and uncertainty analysis.

When tests are run in accordance with a Code, the test results themselves, without adjustment for uncertainty, yield the best available indication of the actual performance of the tested equipment. ASME Performance Test Codes do **not** specify means to compare those results to contractual guarantees. Therefore, it is recommended that the parties to a commercial test agree **before starting the test and preferably before signing the contract** on the method to be used for comparing the test results to the contractual guarantees. It is beyond the scope of any Code to determine or interpret how such comparisons shall be made.

Approved by Letter Ballot #95-1 and BPTC Administartive Meeting of March 13–14, 1995.

Copyright ASME International
Provided by IHS under license with ASME
No reproduction or networking permitted without license from IHS
Not for Resale

PERSONNEL OF PERFORMANCE TEST CODES COMMITTEE NO. 4 ON STEAM GENERATING UNITS

OFFICERS

Philip M. Gerhart, *Chair*
Patrick G. Davidson, *Vice Chair*
Jack H. Karian, *Secretary*

COMMITTEE PERSONNEL

Robert R. Carpenter, Duke Power, retired
Richard Carson, Tennessee Valley Authority
Patrick G. Davidson, Black & Veatch
Deirdre L. Hauser, Alternate to Davidson, Black & Veatch
Matthew J. Dooley, ABB CE Services
Richard J. Dube, D B Riley, Inc.
Jack Entwistle, Consultant
Barry L. Fisher, Kvaerner Pulping Inc.
Donald L. Garver, Alternate to Fisher, Kvaerner Pulping Inc.
Philip M. Gerhart, University of Evansville
Thomas C. Heil, Babcock & Wilcox
Medhat A. H. Higazy, Detroit Edison
Jack H. Karian, ASME International
Dennis K. Kruse, American Society of Naval Engineers
Arnold M. Manaker, Tennessee Valley Authority
Russell N. Mosher, American Boiler Manufacturers Association
James T. Phillips, Black & Veatch
Ernest Sotelo, Consultant
James J. Youmans, Stone & Webster Engineering Corp.

Copyright ASME International
Provided by IHS under license with ASME
No reproduction or networking permitted without license from IHS
Not for Resale

BOARD ON PERFORMANCE TEST CODES

OFFICERS

D. R. Keyser, *Chair*
P. M. Gerhart, *Vice Chair*
W. O. Hays, *Secretary*

COMMITTEE PERSONNEL

R. P. Allen
C. W. Almquist
R. L. Bannister
D. S. Beachler
B. Bornstein
J. M. Burns
J. R. Friedman
G. J. Gerber
R. S. Hecklinger
S. J. Korellis
T. H. McCloskey
J. W. Milton
G. H. Mittendorf
S. P. Nuspl
A. L. Plumley
R. R. Priestley
C. B. Scharp
J. Siegmund
J. A. Silvaggio
R. E. Sommerlad
W. G. Steele
J. C. Westcott
J. G. Yost

Copyright ASME International
Provided by IHS under license with ASME
No reproduction or networking permitted without license from IHS
Not for Resale

CONTENTS

Foreword		iii
Notice		iv
Committee Roster		v
1	Object and Scope	1
	1.1 Object	1
	1.2 Scope	1
	1.3 Typical Uncertainty for Efficiency	2
	1.4 Steam Generator Boundaries	2
2	Definitions and Description of Terms	13
	2.1 Definitions	13
	2.2 Abbreviations	16
	2.3 Units and Conversions	17
3	Guiding Principles	19
	3.1 Introduction	19
	3.2 Performance Test Procedures	22
	3.3 References to Other Codes and Standards	30
	3.4 Tolerances and Test Uncertainties	31
4	Instruments and Methods of Measurement	33
	4.1 Guiding Principles	33
	4.2 Data Required	33
	4.3 General Measurement Requirements	37
	4.4 Temperature Measurement	52
	4.5 Pressure Measurement	58
	4.6 Velocity Traverse	59
	4.7 Flow Measurement	60
	4.8 Solid Fuel and Sorbent Sampling	63
	4.9 Liquid and Gaseous Fuel Sampling	69
	4.10 Sampling of Flue Gas	69
	4.11 Residue Sampling	70
	4.12 Fuel, Sorbent, and Residue Analysis	71
	4.13 Flue Gas Analysis	72
	4.14 Electric Power	73
	4.15 Humidity	73
5	Computation of Results	75
	5.1 Introduction	75
	5.2 Measurement Data Reduction	75
	5.3 Capacity	80
	5.4 Output (QrO), Btu/h (W)	80
	5.5 Input	81
	5.6 Energy Balance	81
	5.7 Efficiency	82
	5.8 Fuel Properties	83
	5.9 Sorbent and Other Additive Properties	84
	5.10 Residue Properties	88
	5.11 Combustion Air Properties	89
	5.12 Flue Gas Products	94

Copyright ASME International
Provided by IHS under license with ASME
No reproduction or networking permitted without license from IHS
Not for Resale

	5.13 Air and Flue Gas Temperature	96
	5.14 Losses	99
	5.15 Credits	106
	5.16 Uncertainty	107
	5.17 Other Operating Parameters	110
	5.18 Corrections to Standard or Guarantee Conditions	111
	5.19 Enthalpy of Air, Flue Gas, and Other Substances Commonly Required for Energy Balance Calculations	119
	5.20 Calculation Acronyms	132
6	Report of Test Results	143
	6.1 Introduction	143
	6.2 Report Contents	143
7	Uncertainty Analysis	145
	7.1 Introduction	145
	7.2 Fundamental Concepts	145
	7.3 Pretest Uncertainty Analysis and Test Planning	151
	7.4 Equations and Procedures for Determining Precision Index	152
	7.5 Equations and Guidance for Determining Bias Limit	157
	7.6 Uncertainty of Test Results	162

Figures

1.4-1	Typical Oil and Gas Fired Steam Generator	4
1.4-2	Typical Pulverized Coal Fired Steam Generator, Alternative 1: Single Air Heater	5
1.4-3	Typical Pulverized Coal Fired Steam Generator, Alternative 2: Bisector Air Heater	6
1.4-4	Typical Pulverized Coal Fired Steam Generator, Alternative 3: Trisector Air Heater	7
1.4-5	Typical Circulating Bed Steam Generator	8
1.4-6	Typical Stoker-Coal Fired Steam Generator	9
1.4-7	Typical Bubbling Bed Steam Generator	10
3.1-1	Steam Generator Energy Balance	20
3.2-1	Repeatability of Runs	24
3.2-2	Illustration of Short-Term (Peak to Valley) Fluctuation and Long-Term Deviation	28
4.4-1	Sampling Grids—Rectangular Ducts	56
4.4-2	Sampling Grid—Circular Ducts	57
4.8-1	Full-Cut Solids Sampling Method	65
4.8-2	Typical "Thief" Probe for Solids Sampling on a Solids Stream	66
5.19-1	Mean Specific Heat of Dry Air Versus Temperature	126
5.19-2	Mean Specific Heat of Water Vapor Versus Temperature	127
5.19-3	Mean Specific Heat of Dry Flue Gas Versus Temperature	129
5.19-4	Mean Specific Heat of Dry Residue Versus Temperature	130
7.2-1	Types of Errors in Measurements	147
7.2-2	Time Dependence of Errors	148
7.2-3	Constant Value and Continuous Variable Models	149
7.5-1	Generic Calibration Curve	159

Copyright ASME International
Provided by IHS under license with ASME
No reproduction or networking permitted without license from IHS
Not for Resale

Tables

1.3-1	Typical Code Test Uncertainties for Efficiency	3
2.3-1	Units and Conversions	17
3.1-1	Comparison of Efficiency Determination	22
3.2-1	Operating Parameter Deviations	25
3.2-2	Minimum Test Run Duration	28
4.2-1	Parameters Required for Efficiency Determination by Energy Balance Method	34
4.2-2	Parameters Required for Efficiency Determination by Input-Output Method	37
4.2-3	Parameters Required for Capacity Determination	38
4.2-4	Parameters Required for Steam Temperature/Control Range Determination	39
4.2-5	Parameters Required for Exit Flue Gas and Air Entering Temperature Determinations	40
4.2-6	Parameters Required for Excess Air Determination	41
4.2-7	Parameters Required for Water/Steam Pressure Drop Determinations	42
4.2-8	Parameters Required for Air/Flue Gas Pressure Drop Determinations	43
4.2-9	Parameters Required for Air Infiltration Determination	44
4.2-10	Parameters Required for Sulfur Capture/Retention Determination	45
4.2-11	Parameters Required for Calcium to Sulfur Molar Ratio Determination	45
4.2-12	Parameters Required for Fuel, Air, and Flue Gas Flow Rate Determinations	46
4.3-1	Potential Instrumentation Bias Limits	48
4.3-2	Potential Bias Limits for Coal Properties	52
4.3-3	Potential Bias Limits for Limestone Properties	53
4.3-4	Potential Bias Limits for Fuel Oil Properties	53
4.3-5	Potential Bias Limits for Natural Gas Properties	54
4.8-1	*F* Distribution	68
5.16-1	Two-Tailed Student's t-Table for the 95 Percent Confidence Level	109
5.20.2-1	Acronyms	134
5.20.2-2	Measurement and Uncertainty Acronyms	141

Nonmandatory Appendices

A	Calculation Forms	163
B	Sample Calculations	201
C	Derivations	241
D	Gross Efficiency	247
E	The Probable Effects of Coal Properties on Pulverized Coal and Coal and Sorbent Properties on Fluidized Bed Steam Generator Design and Performance	249
F	References	261

Copyright ASME International
Provided by IHS under license with ASME
No reproduction or networking permitted without license from IHS
Not for Resale

SECTION 1 — OBJECT AND SCOPE

1.1 OBJECT

The object of this Code is to establish procedures for conducting performance tests of fuel fired steam generators. This Code provides standard test procedures which can yield results giving the highest level of accuracy consistent with current engineering knowledge and practice.

The accuracy of a particular test may be affected by the fuel fired during the test or other factors within the discretion of the operator. A test is considered an ASME Code test only if the following conditions are met:

- test procedures comply with procedures and allowed variations defined by this Code
- uncertainties of test results, determined in accordance with Section 7 of this Code, do not exceed target test uncertainties defined by prior written agreement in accordance with Section 3 of this Code

This Code can be used to determine the following performance characteristics:

- efficiency
- output
- capacity
- steam temperature/control range
- exit flue gas and entering air temperature
- excess air
- water/steam pressure drop
- air/flue gas pressure drop
- air infiltration
- sulfur capture/retention
- calcium to sulfur molar ratio
- fuel, air, and flue gas flow rates

These performance characteristics are typically required for the following purposes:

- comparing actual performance to guaranteed performance
- comparing actual performance to a reference
- comparing different conditions or methods of operation
- determining the specific performance of individual parts or components
- comparing performance when firing an alternate fuel
- determining the effects of equipment modifications

This Code also provides methods for converting certain performance characteristics at test conditions to those which would exist under specified operating conditions.

1.2 SCOPE

1.2.1 General Scope. The rules and instructions presented in this Code apply to fired steam generators. These include coal, oil, and gas fired steam generators as well as steam generators fired by other hydrocarbon fuels. The scope also includes steam generators with integral fuel-sulfur capture utilizing chemical sorbents.

Steam generators which are not fired by coal, oil, or gas may be tested using the concepts of this Code, but it should be noted that the uncertainty caused by variability of the fuel may be difficult to determine and is likely to be greater than the uncertainties in sampling and analysis of coal, oil, or gas.

Gas turbine heat recovery and other heat recovery steam generators designed to operate with supplemental firing should be tested in accordance with Performance Test Code (PTC) 4.4, Gas Turbine Heat Recovery Steam Generators.

This Code does not apply to nuclear steam supply systems, which are specifically addressed in PTC 32.1, Nuclear Steam Supply Systems. This Code does not apply to the performance testing of chemical heat recovery steam generators, municipal waste fired steam generators, pressurized steam generators with gas side pressure greater than 5 atmospheres, or incinerators. Municipal waste fired steam generators can be tested in accordance with PTC 34, Waste Combustors with Energy Recovery.

Testing of auxiliary equipment is not addressed in this Code, but shall be governed by the following Performance Test Codes which apply specifically to the equipment in question:

- PTC 4.2, Coal Pulverizers.
- PTC 4.3, Air Heaters.
- PTC 11, Fans.

Copyright ASME International
Provided by IHS under license with ASME
No reproduction or networking permitted without license from IHS
Not for Resale

Steam purity and quality shall be tested in accordance with PTC 19.11, Water and Steam in the Power Cycle (Purity and Quality, Leak Detection and Measurement).

Methods used by this Code for determining emission related parameters, e.g., sulfur retention and flue gas constituents, are not equivalent to methods required by EPA, New Stationary Source Performance Standards, 40CFR60 and are not intended to be used for evaluating compliance with those standards or any other environmental regulations.

This Code does not prescribe procedures for testing to determine chemical and physical properties of fuels. Applicable procedures may be found in the PTC 3 series or other pertinent standards such as those published by ASTM.

This Code specifically addresses equipment used for the generation of steam; however, the basic principles presented are also applicable to other working fluids.

Certain types and sizes of equipment used for the recovery of heat released by combustion are not addressed in any specific Performance Test Code. This Code can be used as a general guide in developing performance tests for such equipment; however, such specially developed performance tests shall not be considered ASME Code tests.

1.2.2 Design Variations. This Code provides general procedures for conducting combustible fuel fired steam generator performance tests; however, it cannot possibly provide detailed procedures applicable to every steam generator design variation. Design variations considered in developing this Code include subcritical and supercritical once-through steam generators and oil, gas, stoker, cyclone, pulverized, and fluidized bed firing. For each performance test, a competent engineer must study the actual steam generator and its relation to the remainder of the steam cycle, and develop test procedures which are consistent with this Code.

1.2.3 Reports. A test report shall be prepared. See Section 6.

1.2.4 References. Many references provide useful supplemental information in planning for a performance test in accordance with this Code. Those used most frequently are listed in Section 3.3.

1.3 TYPICAL UNCERTAINTY FOR EFFICIENCY

Fossil fuel fired steam generators are custom designed for the most severe characteristics of the fuels expected to be burned. The specific arrangement for any given system may contain different low level heat recovery systems as well air quality equipment located within the steam generator envelop. Chemical additives (sorbent) may be added for control of emissions. These variations in steam generator design influence the energy balance method uncertainty result.

Table 1.3-1 shows typical values of uncertainty in steam generator efficiency as a function of fuel type, unit type, and test method selected. The steam generator sizes are shown to allow for defining a test with a cost consistent with the value of the project in accordance with PTC 1, General Instructions. The utility/large industrial category refers in general to steam generators that supply steam to turbine/generators.

The lower values shown for the energy balance method for a utility/large industrial unit are based upon Code air temperature, gas temperature, and gas sampling grids with a typical electronic sampling rate. The small industrial unit values are based on a small grid and obtaining data manually.

The uncertainty of the input-output method is directly proportional to the uncertainty of measurement of feedwater/steam flow, fuel flow, and fuel heating value. To achieve the uncertainties shown in Table 1.3-1, the metering must be selected, manufactured, installed, and used in strict accordance with the applicable codes and standards. Most importantly, the required straight lengths of differential pressure metering runs and use of flow conditioners must be rigorously adhered to. For coal flow, gravimetric feeders must be calibrated by the direct measurement of coal weight, before and after the test.

With the above guidelines, the input-output uncertainties are based upon the following flow measurement-system uncertainties and fuel sampling criteria:

- Feedwater, Utility/Large Industrial — ASME PTC 6 Flow Nozzle — 0.38% System
- Feedwater, Small Industrial — test orifice/empirical formulation — 0.80% System
- Natural Gas — test orifice/empirical formulation — 0.80% system
- Oil Flow — calibrated positive displacement meter — three viscosities (multiple tests for repeatablility) — 0.63% system
- Rigorous calibration of coal feeders
- Fuel Analysis — multiple samples analyzed individually — ASTM reproduciblity bias plus 0.5% sampling bias for oil and gas and 2% sampling bias for coal

1.4 STEAM GENERATOR BOUNDARIES

Boundaries associated with different steam generator arrangements are shown on Figures 1.4-1 through 1.4-

Copyright ASME International
Provided by IHS under license with ASME
No reproduction or networking permitted without license from IHS
Not for Resale

TABLE 1.3-1
TYPICAL CODE TEST UNCERTAINTIES FOR EFFICIENCY

Type of Steam Generator	Energy Balance Method (Percentage Points)	Input-Output Method (Percentage Points)
Utility/Large Industrial		
- Coal fired [Note (1)]	0.4–0.8	3.0–6.0
- Oil fired	0.2–0.4	1.0
- Gas fired	0.2–0.4	1.0
Fluidized Bed [Note (1)]	0.9–1.3	3.0–6.0
Small Industrial With Heat Trap [Note (2)]		
- Oil	0.3–0.6	1.2
- Gas	0.2–0.5	1.2
Without heat trap		
- Oil	0.5–0.9	1.2
- Gas	0.4–0.8	1.2

NOTES:
(1) It is not recommended to test coal fired units using the input-output method because of the large uncertainties measuring coal flow.
(2) Economizer/air heater.

7. The steam generator boundaries shown on these figures encompass the equipment to be included in the steam generator envelope for each case.

The following numbers are used to designate specific locations.

1.4.1 Fuel/Sorbent

- 1 — Coal Leaving Feeder or Bunker
- 1A — Sorbent Leaving Feeder or Bunker
- 2 — Coal to Burners (leaving pulverizer)
- 3 — Oil to Burners
- 3A — Oil to Oil Heaters
- 4 — Gas to Burners

1.4.2 Air

- 5 — Pulverizer Tempering Air
- 6 — FD Fan Inlet
- 6A — PA Fan Inlet
- 7 — FD Fan Discharge
- 7A — PA Fan Discharge
- 7B — Other Air Entering Unit
- 8 — Combustion (secondary) Air Entering Boundary
- 8A — Primary Air Entering Boundary
- 8B — Combustion Air Leaving APH Coils Within Boundary
- 8C — Primary Air Leaving APH Coils Within Boundary
- 9 — Combustion (secondary) Air Leaving Air Heater
- 9A — Primary Air Leaving Air Heater
- 10 — Secondary Air Entering Steam Generator
- 11 — Pulverizer Inlet Air
- 11A — Pulverizer Outlet Air and Fuel Mixture

1.4.3 Flue Gas

- 12 — Leaving Steam Generating Bank (not shown)
- 13 — Entering Economizer (not shown)
- 14 — Leaving Economizer
- 14A — Entering Secondary Air Heater
- 14B — Entering Primary Air Heater
- 14C — Leaving Hot-Side AQC Equipment
- 15 — Leaving Air Heater(s)
- 15A — Leaving Secondary AH
- 15B — Leaving Primary AH
- 16 — Entering Cold-Side AQC Equipment
- 17 — Leaving Cold-Side AQC Equipment
- 18 — Entering ID Fan
- 19 — Leaving ID Fan
- 20 — Entering Low Level Heat Exchanger (not shown)
- 21 — Leaving Low Level Heat Exchanger (not shown)
- 22 — Entering Gas Recirculation Fan
- 23 — Leaving Gas Recirculation Fan (entering boiler)

1.4.4 Steam/Water

- 24 — Feedwater Entering
- 25 — Superheater Spray Water
- 26 — 1st Reheater Spray Water
- 26A — 2nd Reheater Spray Water (not shown)
- 27 — Feedwater Leaving Economizer
- 28 — Feedwater Entering Drum
- 29 — Steam Generator Water Entering Circulating Pump
- 30 — Steam Generator Water Leaving Circulating Pump
- 31 — Saturated Steam Leaving Drum
- 31A — Entering 1st Stage SH Desuperheater

Copyright ASME International
Provided by IHS under license with ASME
No reproduction or networking permitted without license from IHS Not for Resale

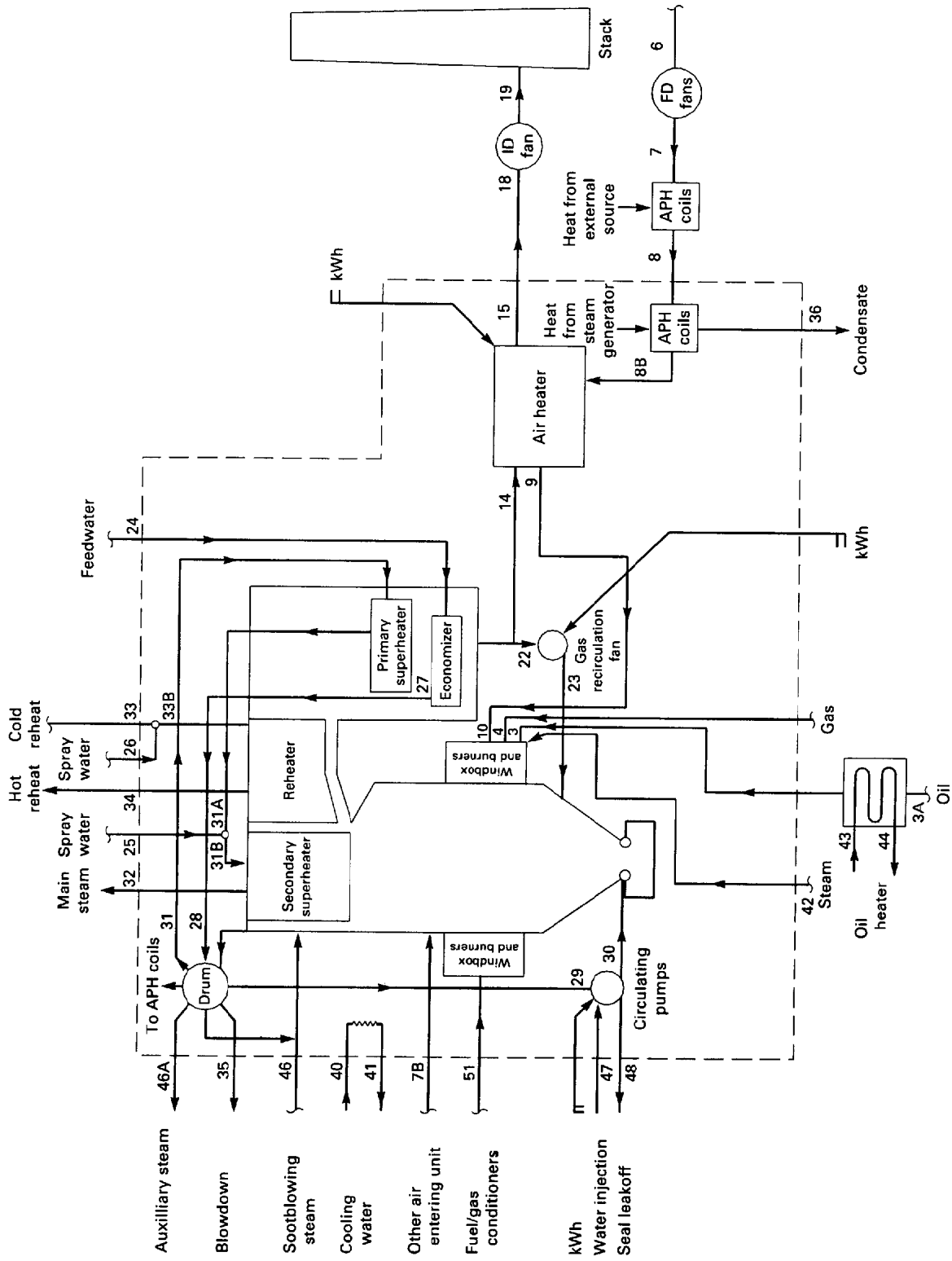

FIG. 1.4-1 TYPICAL OIL AND GAS FIRED STEAM GENERATOR

Not for Resale

Copyright ASME International
Provided by IHS under license with ASME
No reproduction or networking permitted without license from IHS

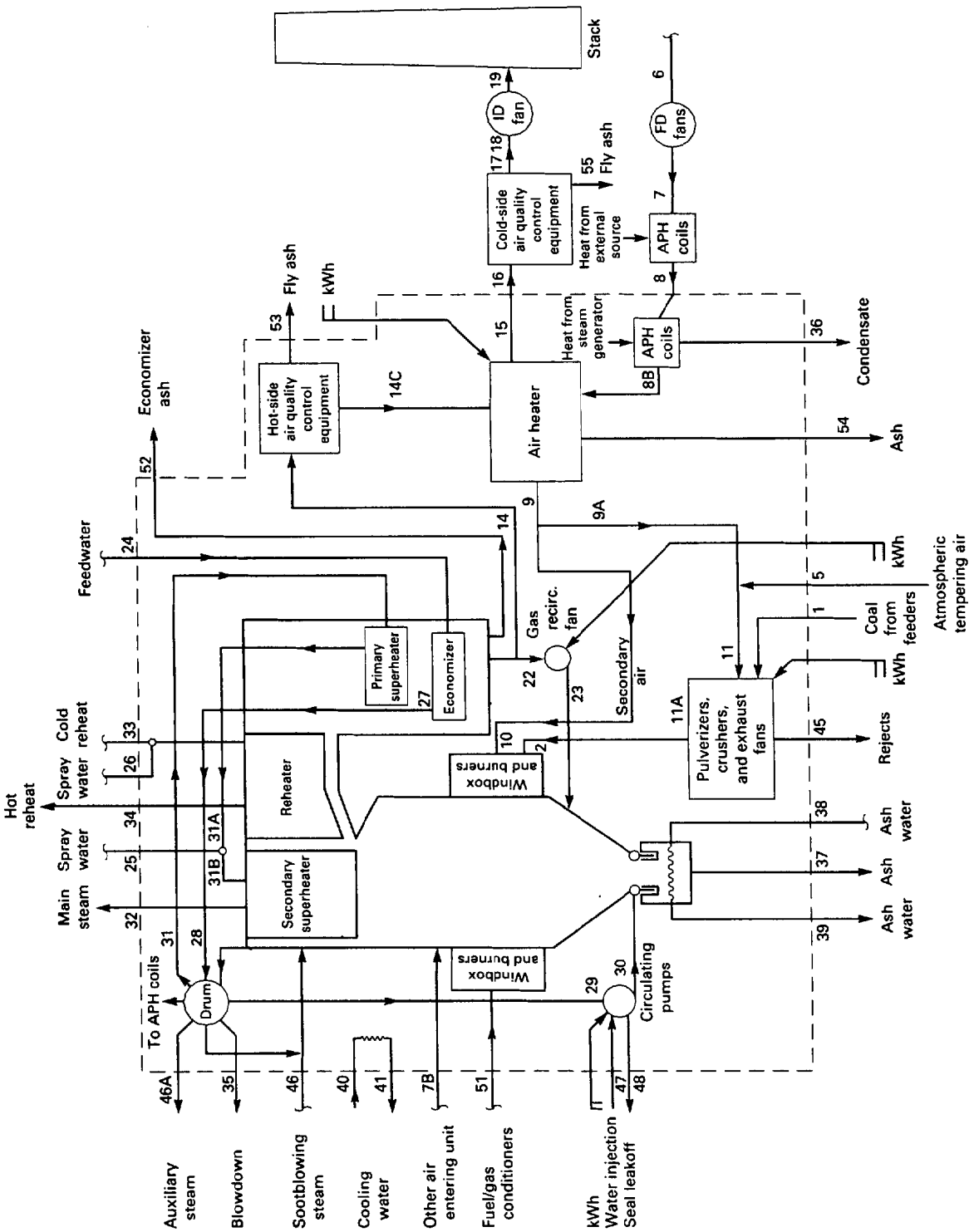

FIG. 1.4-2 TYPICAL PULVERIZED COAL FIRED STEAM GENERATOR
Alternative 1: Single Air Heater

Not for Resale

Copyright ASME International
Provided by IHS under license with ASME
No reproduction or networking permitted without license from IHS

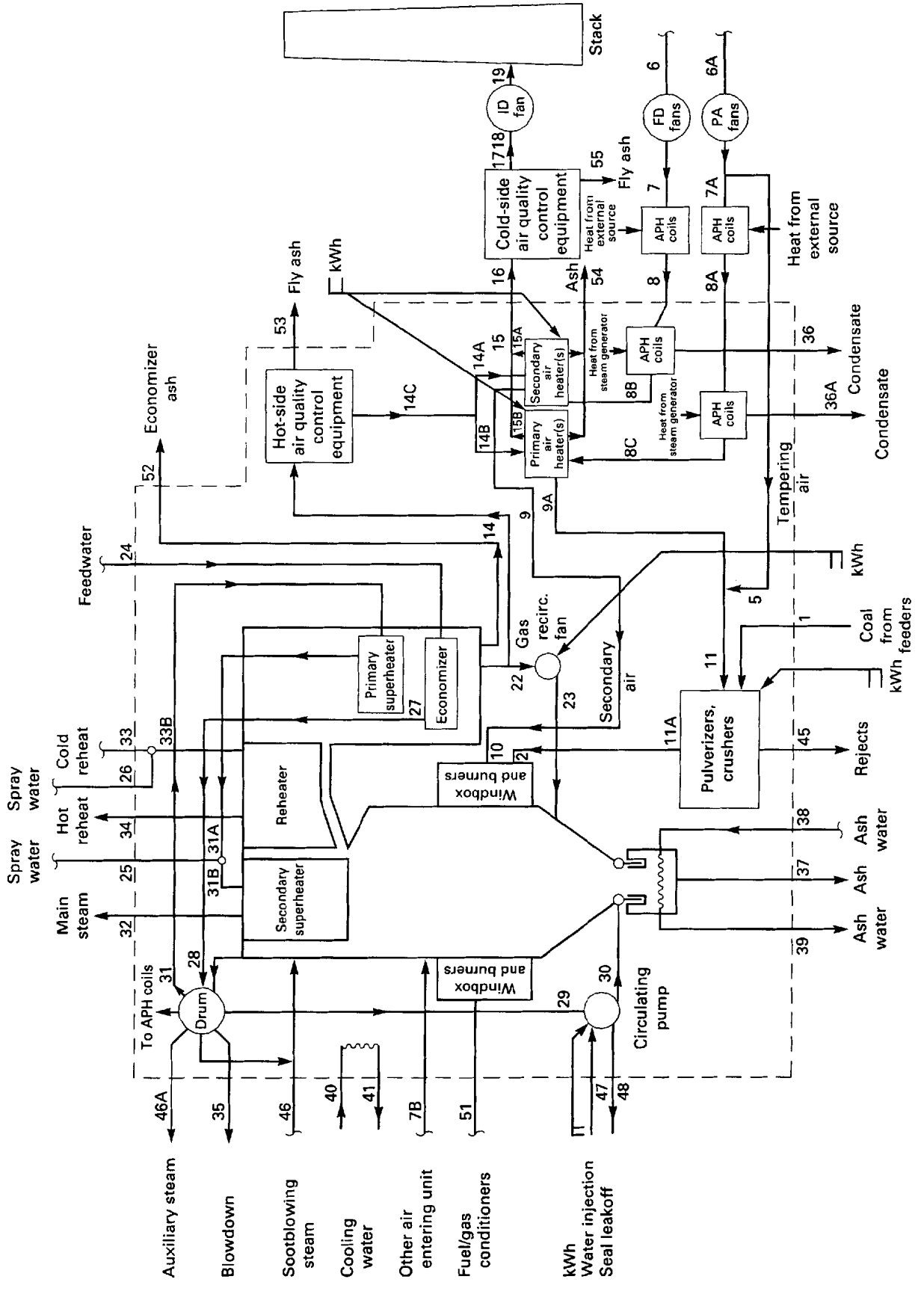

FIG. 1.4-3 TYPICAL PULVERIZED COAL FIRED STEAM GENERATOR
Alternative 2: Bisector Air Heater

Not for Resale

Copyright ASME International
Provided by IHS under license with ASME
No reproduction or networking permitted without license from IHS

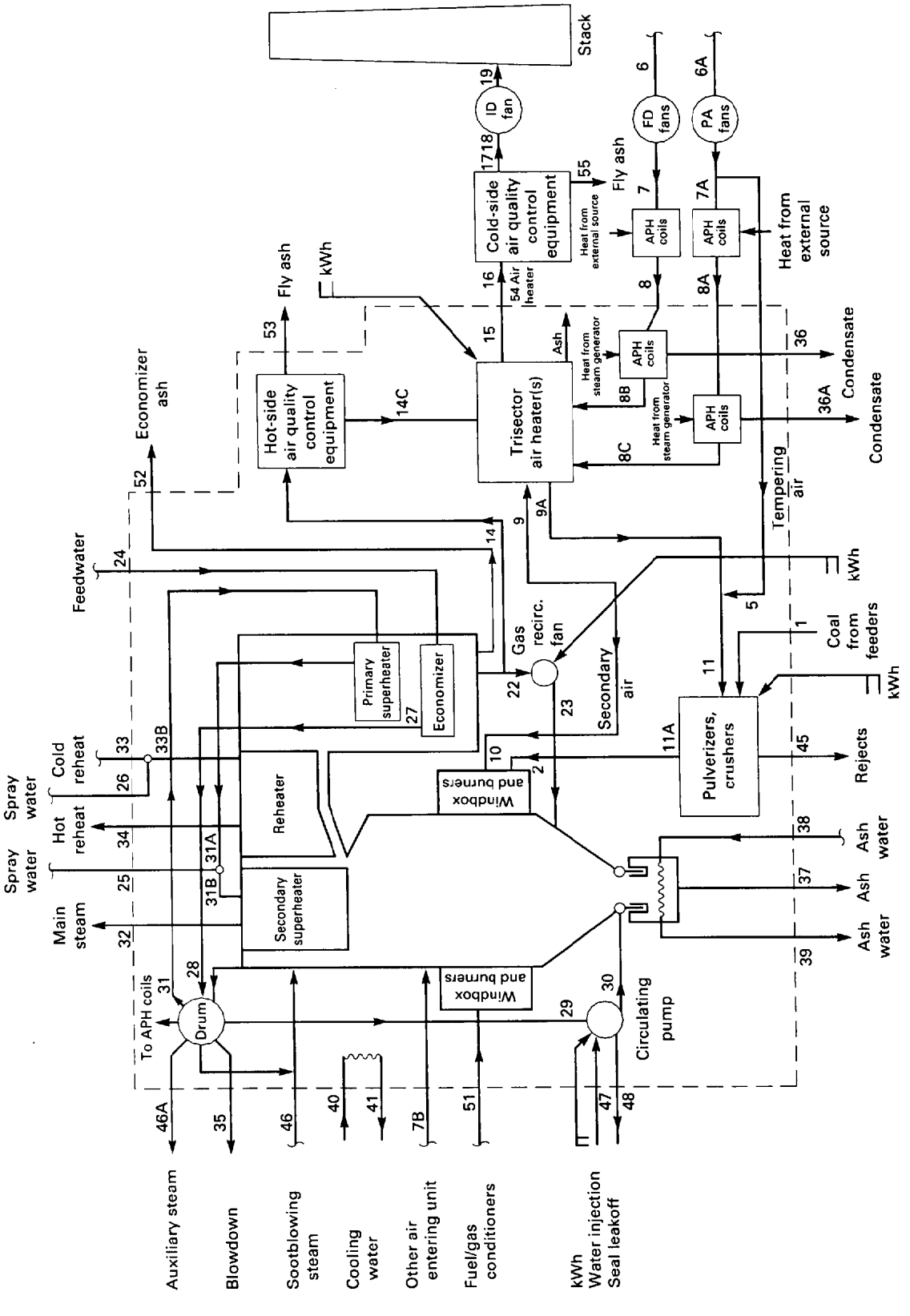

FIG. 1.4-4 TYPICAL PULVERIZED COAL FIRED STEAM GENERATOR
Alternative 3: Trisector Air Heater

Not for Resale

Copyright ASME International
Provided by IHS under license with ASME
No reproduction or networking permitted without license from IHS

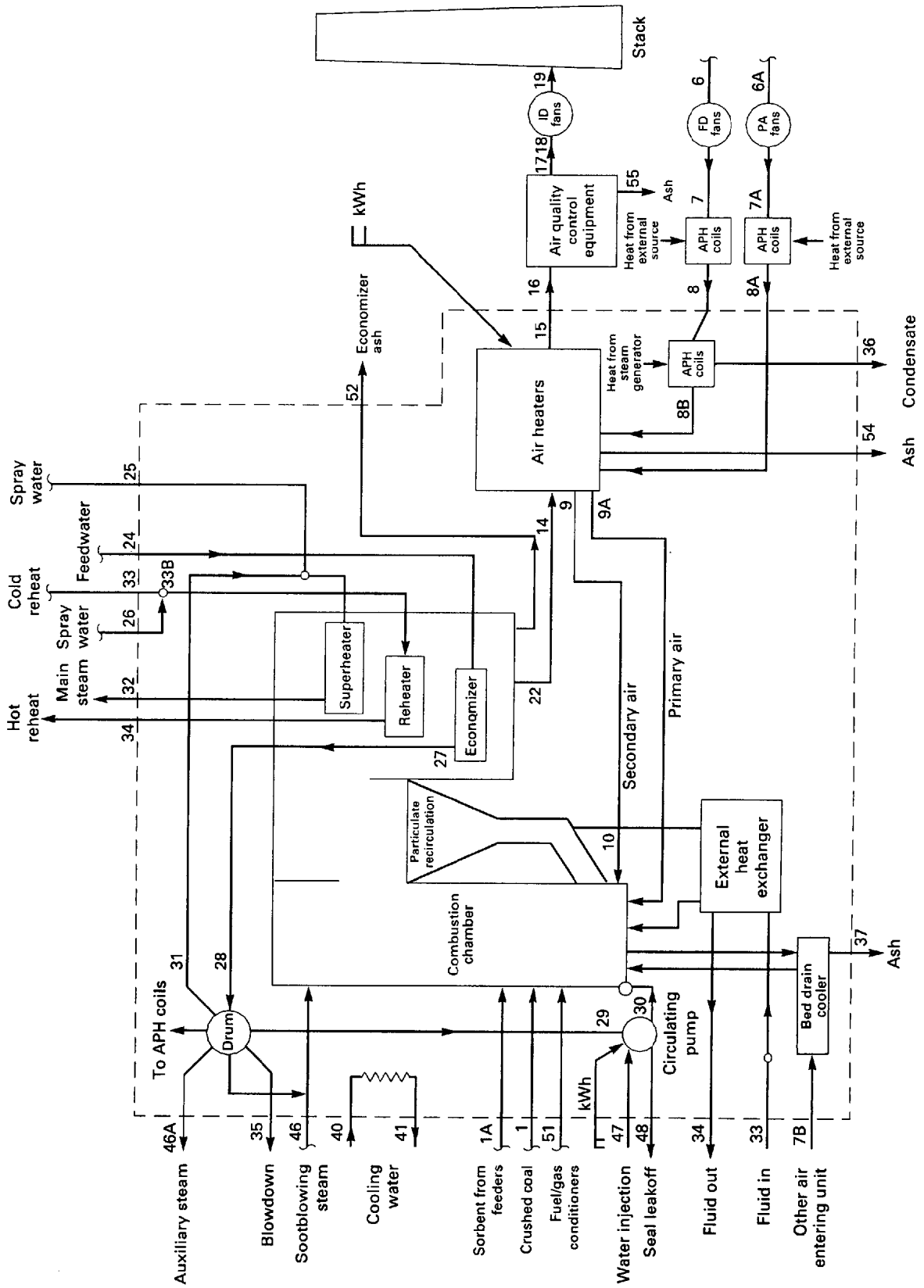

FIG. 1.4-5 TYPICAL CIRCULATING BED STEAM GENERATOR

Not for Resale

Copyright ASME International
Provided by IHS under license with ASME
No reproduction or networking permitted without license from IHS

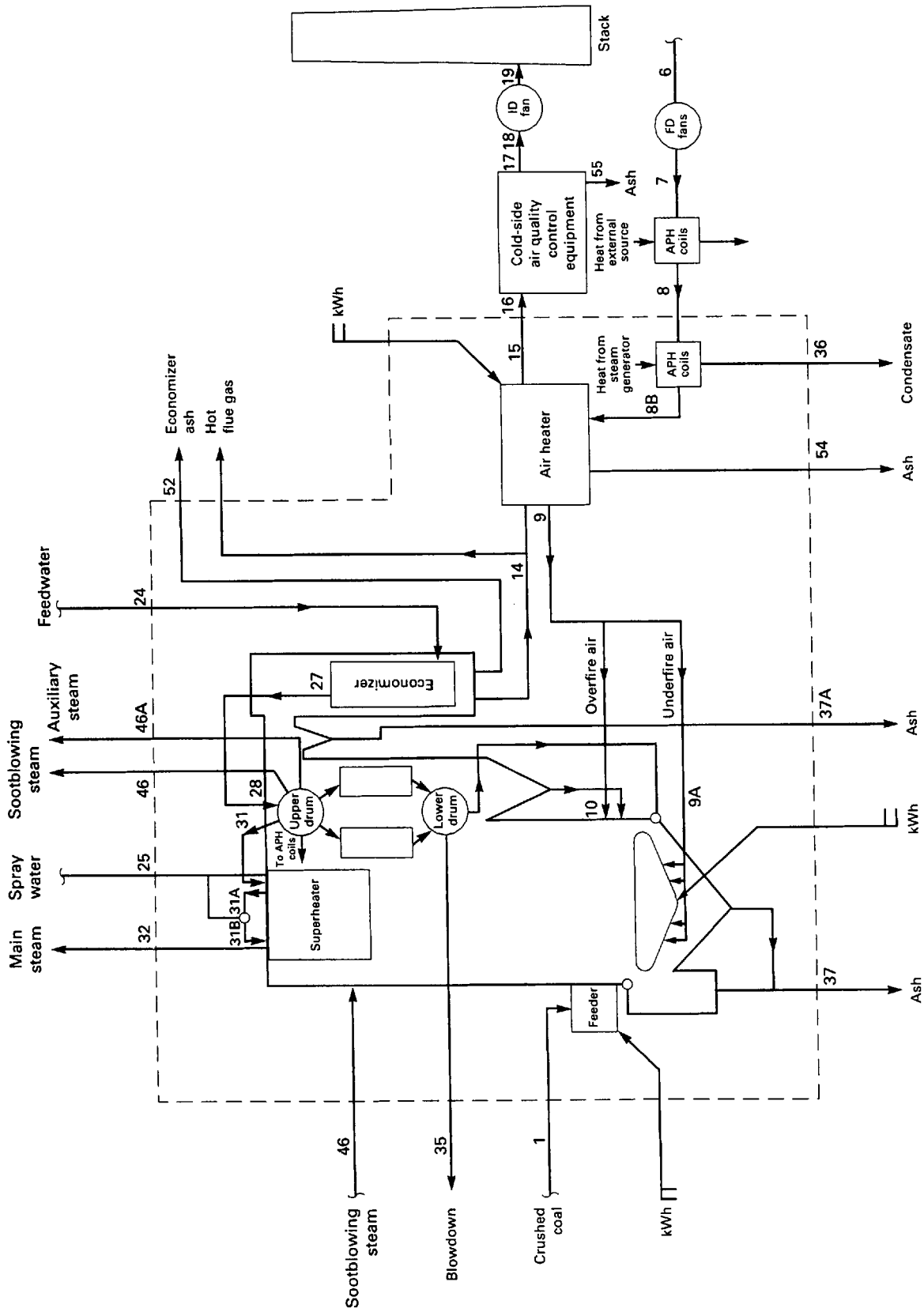

FIG. 1.4-6 TYPICAL STOKER-COAL FIRED STEAM GENERATOR

Not for Resale

Copyright ASME International
Provided by IHS under license with ASME
No reproduction or networking permitted without license from IHS

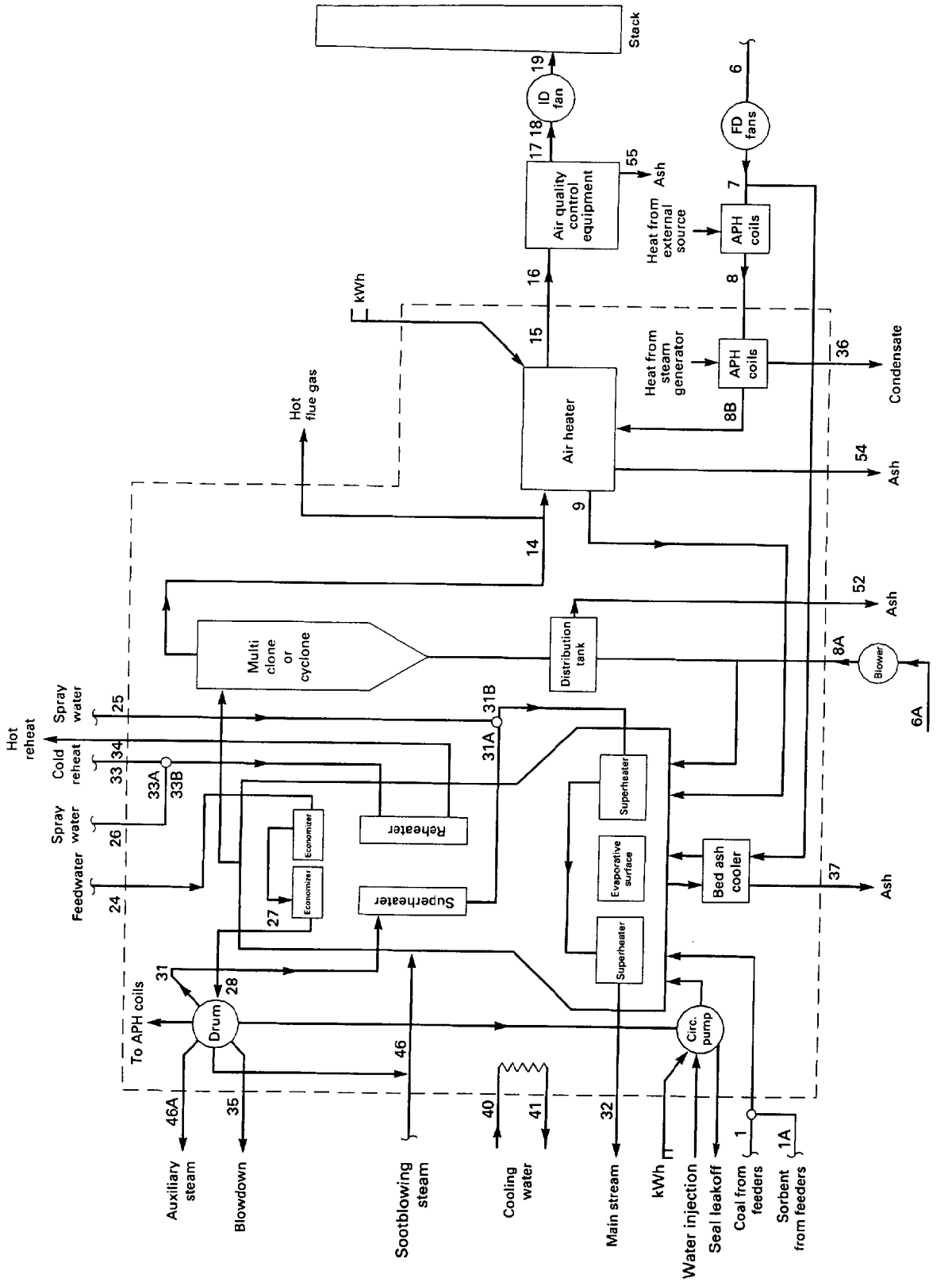

FIG. 1.4-7 TYPICAL BUBBLING BED STEAM GENERATOR

Not for Resale

Copyright ASME International
Provided by IHS under license with ASME
No reproduction or networking permitted without license from IHS

- 31B — Leaving 1st Stage SH Desuperheater
- 31C — Entering 2nd Stage SH Desuperheater (not shown)
- 31D — Leaving 2nd Stage SH Desuperheater (not shown)
- 32 — Main Steam
- 33 — Reheat Steam Entering Boundary
- 33A — Entering 1st Reheat Desuperheater
- 33B — Leaving 1st Reheat Desuperheater
- 33C — Entering 2nd Reheat Desuperheater (not shown)
- 33D — Leaving 2nd Reheat Desuperheater (not shown)
- 34 — Leaving 1st Reheater
- 34A — Leaving 2nd Reheater (not shown)
- 35 — Blowdown
- 36 — Condensate Leaving APH Coils (internal to boundary)
- 36A — Condensate Leaving Primary APH Coils (internal to boundary)

1.4.5 Miscellaneous

- 37 — Furnace Refuse
- 38 — Ash Pit Water In
- 39 — Ash Pit Water Out
- 40 — Cooling Water In
- 41 — Cooling Water Out
- 42 — Atomizing Steam
- 43 — Steam Entering Fuel Oil Heater
- 44 — Steam Leaving Fuel Oil Heater
- 45 — Pulverizer Rejects
- 46 — Soot Blower Steam
- 46A — Auxiliary Steam
- 47 — Boiler Circulating Pump Water Injection
- 48 — Boiler Circulating Pump Water Leakoff
- 49 — Hot Air Recirculation (not shown)
- 50 — Hot Air Bypass (not shown)
- 51 — Fuel/Gas Conditioners
- 52 — Economizer Residue
- 53 — Hot AQC Equipment Residue
- 54 — Air Heater Residue
- 55 — Cold AQC Equipment Residue

Copyright ASME International
Provided by IHS under license with ASME
No reproduction or networking permitted without license from IHS
Not for Resale

SECTION 2 — DEFINITIONS AND DESCRIPTION OF TERMS

This Section contains abbreviations, unique terms, and variations on typically used engineering definitions required for the implementation of this Code.

2.1 DEFINITIONS

additive: a substance added to a gas, liquid, or solid stream to cause a chemical or mechanical reaction to enhance collection efficiency.

air, excess: the air supplied to burn a fuel in addition to the corrected theoretical air. Excess air is expressed as a percentage of the corrected theoretical air in this Code.

air, infiltration: air that leaks into the steam generator casing.

air, primary: the transport and drying air for the coal from the pulverizers to the burners in pulverized coal fired applications. The primary air is often at a temperature different from that of the secondary air as it leaves the regenerative air heaters in large steam generators, and typically represents less than 25% of the total combustion air. Oil and gas fired steam generators usually do not have primary air. Primary air is the air used for fluidizing the bed material at the base of the combustion chamber in circulating fluidized beds.

air, secondary: the balance of the combustion air not provided as primary air in pulverized and fluid bed applications. All of the combustion air leaving the air heater is usually referred to as secondary air in oil and gas fired steam generators. Secondary air may be split into overfire air or other streams as it enters the furnace; however, it remains secondary air up to and including the wind box.

air, other: a number of other combustion air arrangements and splits, e.g., overfire air, tertiary air, encountered in the combustion processes covered by this Code.

air, standard: air at 77°F (25°C) and 29.53 in. of mercury (100 kPa), 1 bar absolute pressure, with a specific humidity of 0.013 lb moisture/lb dry air (kg/kg). Refer to Subsection 5.11.1 for composition of standard dry air.

air, theoretical: the amount of air required to supply the exact amount of oxygen necessary for complete combustion of a given quantity of fuel. Theoretical air and stoichiometric air are synonymous.

air, corrected theoretical: theoretical air adjusted for unburned carbon and additional oxygen required to complete the sulfation reaction.

air heater: a heat exchanger that transfers heat from a high temperature medium such as hot gas to an incoming air stream. Regenerative air heaters include bisector and trisector types, with fixed or rotating heating elements. Recuperative air heaters include tubular, plate, and heat pipe types.

air preheater coils: a heat exchanger that typically uses steam, condensate, and/or glycol to heat air entering the steam generator and is often used to control corrosion in regenerative and recuperative air heaters.

analysis, proximate: laboratory analysis, in accordance with the appropriate ASTM standard, of a fuel sample providing the mass percentages of fixed carbon, volatile matter, moisture, and noncombustibles (ash).

analysis, ultimate: laboratory analysis, in accordance with the appropriate ASTM standard, of a fuel sample providing the mass percentages of carbon, hydrogen, oxygen, nitrogen, sulfur, moisture, and ash.

as-fired fuel: fuel in the condition as it enters the steam generator boundary.

ash: the noncombustible mineral matter constituent of fuel that remains after complete burning of a fuel sample in accordance with appropriate ASTM standards.

ash, bottom: all residue removed from the combustion chamber other than that entrained in the flue gas.

ash, fly: particles of residue entrained in the flue gas leaving the steam generator boundary.

ash, other: residue extracted from the steam generator at locations such as boiler bank hoppers, air heater hoppers, and economizer hoppers.

Previous Page is Blank

Copyright ASME International
Provided by IHS under license with ASME
No reproduction or networking permitted without license from IHS
Not for Resale

ash fusion temperatures: four temperatures (initial deformation, softening, hemispherical, and fluid) determined for a given fuel ash as determined by the appropriate ASTM standard. Frequently used in the singular to indicate only the softening temperature, the temperature at which the test cone has deformed to a shape whose height and width are equal.

ash pit: a pit or hopper located below a furnace where residue is collected and removed.

attemperator: see *desuperheater.*

bias limit: the estimate of error.

calcination: the endothermic chemical reaction which takes place when carbon dioxide is released from calcium carbonate to form calcium oxide, or from magnesium carbonate to form magnesium oxide.

calcium to sulfur molar ratio (Ca/S): the total moles of calcium in the sorbent feed divided by the total moles of sulfur in the fuel feed.

calcium utilization: the percent of calcium in the sorbent that reacts with sulfur dioxide (SO_2) to form calcium sulfate ($CaSO_4$). It is sometimes called sorbent utilization.

capacity: the maximum main steam mass flow rate that the steam generator is capable of producing on a continuous basis with specified steam conditions and cycle configuration (including specified blowdown and auxiliary steam). This is frequently referred to as maximum continuous rating.

capacity, peak: the maximum main steam mass flow rate that the steam generator is capable of producing with specified steam conditions and cycle configuration (including specified blowdown and auxiliary steam) for intermittent operation, i.e., for a specified period of time without affecting future operation of the unit.

combustion chamber: an enclosed space provided for the combustion of fuel.

combustion efficiency: a measure of the completeness of oxidation of all fuel compounds. It is usually quantified as the ratio of actual heat released by combustion to the maximum heat of combustion available.

combustion split: the portion of energy released in the dense bed region of a fluidized bed expressed as a percentage of the total energy released.

control range: the capacity range over which main steam temperature and/or reheat steam temperature can be maintained at the rated conditions.

coverage: the percentage of observations (measurements) of a parameter that can be expected to differ from the true value of the parameter by no more than the uncertainty.

credits: energy entering the steam generator envelope other than the chemical energy in the as-fired fuel. Credits include sensible heat (a function of specific heat and temperature) in the fuel, entering air, and atomizing steam; energy from power conversion in the pulverizers, circulating pumps, primary air fans, and gas recirculation fans; and chemical reactions such as sulfation. Credits can be negative, such as when the air temperature is below the reference temperature.

dehydration: the endothermic chemical reaction which takes place when water is released from calcium hydroxide to form calcium oxide, or from magnesium hydroxide to form magnesium oxide.

desuperheater: apparatus for reducing and controlling the temperature of a superheated vapor (attemperator).

dilute phase: the portion of the bed in a circulating fluidized bed combustion chamber above the secondary air inlet ducts (made up primarily of the circulating particulate material).

efficiency, fuel: the ratio of the output to the input as chemical energy of fuel.

efficiency, gross: the ratio of the output to the total energy entering the steam generator envelope.

energy balance method: sometimes called the heat balance method. A method of determining steam generator efficiency by a detailed accounting of all energy entering and leaving the steam generator envelope. Section 3.1 provides detailed discussion of this method.

error, bias: sometimes called bias. The difference between the average of the total population and the true value. The true systematic or fixed error which characterizes every member of any set of measurements from the population.

error, precision: a statistical quantity that is expected to be normally distributed. Precision error results from the fact that repeated measurements of the same quantity by the same measuring system operated by the same personnel do not yield identical values. Also called random error.

error, total: sum of bias error and precision error.

exit gas temperature: the average temperature of the flue gas leaving the steam generator boundary. This temperature may or may not be adjusted for air heater leakage.

Copyright ASME International
Provided by IHS under license with ASME
No reproduction or networking permitted without license from IHS
Not for Resale

fixed carbon: the carbonaceous residue less the ash remaining in the test container after the volatile matter has been driven off in making the proximate analysis of a solid fuel in accordance with the appropriate ASTM standard. Also see *volatile matter.*

flue gas: the gaseous products of combustion including excess air.

fluidized bed: a bed of suitably sized combustible and noncombustible particles through which a fluid (air in fluidized bed steam generators) is caused to flow upward at a sufficient velocity to suspend the particles and to impart to them a fluid-like motion.

fluidized bed, bubbling: a fluidized bed in which the fluidizing air velocity is less than the terminal velocity of most of the individual particles. Part of the gas passes through the bed as bubbles. This results in a distinct bed region because an insignificant amount of the bed is carried away by the fluidizing air.

fluidized bed, circulating: a fluidized bed in which the fluidizing air velocity exceeds the terminal velocity of most of the individual particles, so that they are carried from the combustion chamber and later reinjected.

freeboard: the volume from the upper surface of the expanded bed to the exit of the furnace. This definition applies to a fluidized bed of dense solids (bubbling bed) in which there is an identifiable bed surface. It does not apply to a circulating fluidized bed.

furnace: an enclosed space provided for the combustion of fuel.

heating value, higher: the total energy liberated per unit mass of fuel upon complete combustion as determined by the appropriate ASTM standards. The higher heating value includes the latent heat of the water vapor. When the heating value is measured at constant volume, it must be converted to a constant pressure value for use in this Code.

heating value, lower: the total heat liberated per unit mass of fuel minus the latent heat of the water vapor in the products of combustion as determined by the appropriate ASTM standards (not used in this Code).

input: the total chemical energy available from the fuel. Input is based on the higher heating value.

input-output method: a method of determining steam generator efficiency by direct measurement of output and input. Referred to as I/O method.

loss on ignition: commonly referred to as LOI. The loss in mass of a dried dust sample, expressed in percent, occurring between two temperature levels. Typically used to approximate unburned carbon in residue.

losses: the energy which exits the steam generator envelope other than the energy in the output stream(s).

maximum continuous rating: see *capacity.*

moisture: water, in the liquid or vapor phase, present in another substance. Moisture in fuel is determined by the appropriate ASTM standards.

outliers: a data point judged to be spurious.

output: energy absorbed by the working fluid that is not recovered within the steam generator envelope, such as energy to heat the entering air.

precision index: the estimate of the precision error.

purge: to introduce air into the furnace or the boiler flue passages in such volume and manner as to completely replace the air or gas-air mixture contained within.

recycle rate: the mass flow rate of material being reinjected into a furnace or combustion chamber.

recycle ratio: the recycle rate divided by the fuel mass flow rate.

reinjection: the return or recycle of material back to the furnace.

residue: the solid material remaining after combustion. Residue consists of fuel ash, spent sorbent, inert additives, and unburned matter.

run: a complete set of observations made over a period of time with one or more of the independent variables maintained virtually constant.

setting infiltration: same as *air, infiltration.*

sorbent: chemical compound(s) that reacts with and captures a pollutant or, more generally, a constituent that reacts with and captures another constituent.

spent sorbent: solids remaining after evaporation of the moisture in the sorbent, calcination/dehydration, and weight gain due to sulfation.

spent bed material: the bed drain residue removed from a fluidized bed.

sulfation: the exothermic chemical reaction which takes place when calcium oxide unites with oxygen and sulfur dioxide to form calcium sulfate.

sulfur capture: see *sulfur retention.*

Copyright ASME International
Provided by IHS under license with ASME
No reproduction or networking permitted without license from IHS
Not for Resale

sulfur retention: the fraction of the sulfur that enters with the fuel that does not leave the steam generator as sulfur dioxide (SO_2).

supplemental fuel: fuel burned to supply additional energy to the steam generator or to support combustion.

test: a single run or the combination of a series of runs for the purpose of determining performance characteristics. A test normally consists of two runs.

tolerance: the acceptable difference between the test result and its nominal or guaranteed value. Tolerances are contractual adjustments to test results or to guarantees and are not part of the Performance Test Codes.

unburned combustible: the combustible portion of the fuel which is not completely oxidized.

uncertainty: the estimated error limit of a measurement or result for a given coverage. Uncertainty defines a band within which the true value is expected to lie with a certain probability.

volatile matter: the portion of mass, except water vapor, which is driven off in a gaseous form when solid fuel is heated in accordance with the applicable ASTM standard. Also see *fixed carbon*.

2.2 ABBREVIATIONS

The following abbreviations are used throughout this Code.

A/D:	analog to digital
AFBC:	atmospheric fluidized bed combustion
AH:	air heater
APC:	air preheat coils
APH:	air preheater
API:	American Petroleum Institute
AQC:	air quality control
Ar:	argon
C:	carbon
Ca/S:	calcium to sulfur ratio
$Ca(OH)_2$:	calcium hydroxide
CaO:	calcium oxide
$CaSO_4$:	calcium sulfate
CB:	gasified carbon
CO:	carbon monoxide
CO_2:	carbon dioxide
CO_3:	carbonate
CT:	current transformer
DCS:	distributed control system
EPA:	Environmental Protection Agency
ESP:	electrostatic precipitator
FC:	fixed carbon
FD:	forced draft
FEGT:	furnace exit gas temperature
FG:	flue gas
FID:	flame ionization detector
FW:	feedwater
H_2:	hydrogen
H_2S:	hydrogen sulfide
HHV:	higher heating value
HHVF:	higher heating value of fuel
HHVGF:	higher heating value gaseous fuels
HVT:	high velocity thermocouple
I/O:	input/output
ID:	induced draft
K_2O:	potassium oxide
kWh:	kilowatt-hour
LOI:	loss on ignition
MB:	megabyte
MAF:	moisture and ash free
$Mg(OH)_2$:	magnesium hydroxide
$MgCO_2$:	magnesium carbonate
MgO:	magnesium oxide
N_2:	nitrogen
N_2O:	nitrous oxide
Na_2O:	sodium oxide
NH_3:	ammonia
NIST:	National Institute of Standards and Technology
NO:	nitric oxide
NO_2:	nitrogen dioxide
NO_x:	nitrogen oxides
O_2:	oxygen
O_3:	ozone
PA:	primary air
PT:	potential transformer
PTC:	Performance Test Code
RAM:	random access memory
RH:	reheater or relative humidity
RTD:	resistance temperature device
S:	sulfur
SDI:	Spatial Distribution Index
SH:	superheater, superheated
SI:	International System of Units
SiO_2:	silicon dioxide, silica
SO_2:	sulfur dioxide
SO_3:	sulfur trioxide
SO_x:	sulfur oxides
TC:	thermocouple
TGA:	thermogravimetric analysis
THC:	total hydrocarbons
VM:	volatile matter

Copyright ASME International
Provided by IHS under license with ASME
No reproduction or networking permitted without license from IHS
Not for Resale

TABLE 2.3-1
UNITS AND CONVERSIONS

Item	Units		Conversion
	US Customary	SI	[Notes (1), (2)]
Area	ft^2	m^2	9.2903 E−02
Convection and/or radiation heat transfer coefficient	$Btu/ft^2 \cdot h \cdot °F$	$W/m^2 \cdot K$	5.6779 E+00
Density	lbm/ft^3	kg/m^3	1.6018 E+01
Electrical energy	kWh	J	3.6000 E+06
Energy per unit area	Btu/ft^2	J/m^2	1.1341 E+04
Energy per unit mass	Btu/lbm	J/kg	2.3237 E+03
Energy, flux	$Btu/ft^2 \cdot h$	W/m^2	3.1503 E+00
Energy, rate	Btu/h	W	2.9307 E−01
Mass per unit energy	lbm/Btu	kg/J	4.3036 E−04
Mass flow rate	lbm/h	kg/s	1.2599 E−04
Mean specific heat	$Btu/lbm \cdot °F$	$J/kg \cdot K$	4.1868 E+03
Moles per unit mass	moles/lbm	Moles/kg	2.2046 E+00
Pressure	in. wg	Pa, gauge	2.491 E+02
Pressure, absolute	psia	Pa	6.8948 E+03
Pressure, gauge	psig	Pa, gauge	6.8948 E+03
Specific gas constant	$ft \cdot lbf/lbm \cdot R$	$J/kg \cdot K$	5.3812 E+00
Temperature	°F	°C	(°F − 32)/1.8
Temperature, absolute	R	K	(°F + 459.67)/1.8
Universal molar gas constant	$ft \cdot lbf/mole \cdot R$	$J/mole \cdot K$	5.3812 E+00

NOTES:
(1) Care should be taken when converting formulas or equations that contain constant terms or factors. The value of these terms must be understood and may also require conversion.
(2) Conversion factors between SI Units and US Customary Units are given in ASME SI-1, Orientation and Guide for Use of SI (Metric) Units (ANSI Z210.1) [1]. Also, refer to Table 2 of ASME SI-9, Guide for Metrication of Codes and Standards SI (Metric) Units [2], for the number of significant digits to be retained when rounding SI.

2.3 UNITS AND CONVERSIONS

The following units and conversions are used throughout this volume. To obtain SI Units, multiply US Customary Units by the conversion factor given in Table 2.3-1.

Copyright ASME International
Provided by IHS under license with ASME
No reproduction or networking permitted without license from IHS
Not for Resale

SECTION 3 — GUIDING PRINCIPLES

3.1 INTRODUCTION

In preparing to conduct a steam generator performance test, the parties to the test must make a number of decisions and establish certain agreements. This Section of the Code describes these decisions and agreements and provides guidance for performing a test in accordance with this Code.

All parties to the test are entitled and encouraged to witness the test to ensure that it is conducted in accordance with this Code and any written agreements made prior to the test.

3.1.1 Steam Generator Performance. The performance of a steam generator at a particular operating condition is usually quantified by three main characteristics:

- capacity — the maximum mass flow rate of steam produced at specified conditions
- output — all energy absorbed by the working fluid except that recovered within the steam generator envelope
- efficiency — the ratio of output energy to input energy

Any method for determining steam generator performance must address the following two equally difficult questions:

- What are the proper definitions of the parameters to be measured and the performance characteristics to be determined (usually by calculation), e.g., exactly what should be included in the input and output?
- What are the most practicable and accurate methods for measuring parameters and calculating performance characteristics and how accurate must they be to achieve the required test quality? [1]

Capacity is easily defined; the main problems associated with its determination arise from measurement. Output, input, and thus efficiency are subject to several possible definitions. This Code uses specific definitions for these quantities. Figure 3.1-1 illustrates the definitions used for input and output. This figure shows that output includes the energy in all working fluid streams that exit the steam generator envelope, thus accounting for all energy absorbed by the working fluid. The figure also shows that energy credits (usually minor) are added to the fuel input to obtain total input for use in calculating gross efficiency in accordance with Appendix D.

3.1.2 Types of Efficiency. Steam generator efficiency is defined by:

$$efficiency = \frac{output}{input} * 100$$

This single definition yields many different values for efficiency depending upon the choice of items to be included as output, items to be included as input, and higher or lower heating value of the fuel. Entwistle et al. discuss this problem at length and demonstrate that at least 14 different values of efficiency can be computed from the same data [2,3].

This Code recognizes two definitions of steam generator efficiency:

- Fuel efficiency includes all energy absorbed by the working fluid as output but counts only chemical energy of the fuel as input. Fuel efficiency on a higher heating value basis is the preferred definition of efficiency for purposes of this Code and is the method supported by the calculations in Section 5.
- Gross efficiency also includes all energy absorbed by the working fluid as output and counts all energy inputs entering the steam generator envelope as input. Thus, gross efficiency is usually less than or equal to fuel efficiency. Procedures for calculating gross efficiency are contained in Appendix D.

Those energies that are considered outputs and inputs (including credits in the case of gross efficiency) are shown on Fig. 3.1-1. In all cases, this Code uses the higher heating value of the fuel to determine fuel energy input.

3.1.3 Methods of Measurement and Computation to Determine Efficiency. Two generally accepted methods for determining the efficiency of a steam generator are the input/output method and the energy balance method.

Previous Page is Blank

Copyright ASME International
Provided by IHS under license with ASME
No reproduction or networking permitted without license from IHS
Not for Resale

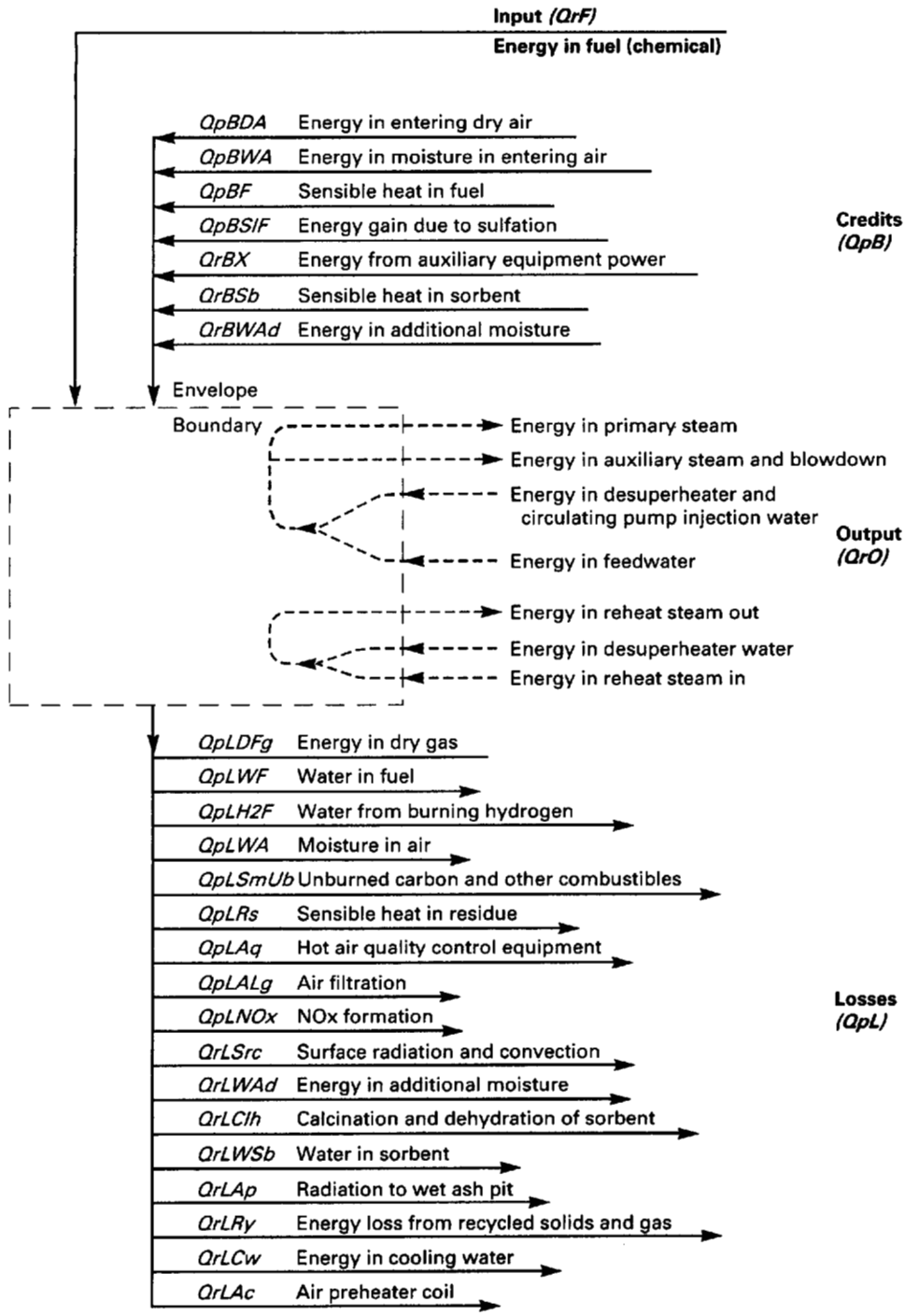

Energy balance:

$$OUTPUT = INPUT - LOSSES + CREDITS$$

$$QrO = QrF - QrL + QrB$$

$$QpL = 100 \times \frac{QrL}{QrF}, \% \qquad QpB = 100 \times \frac{QrB}{QrF}, \%$$

$$\text{Fuel efficiency (percent)} = EF(\%) = 100 \times \frac{OUTPUT}{INPUT} = 100 - QpL + QpB$$

FIG. 3.1-1 STEAM GENERATOR ENERGY BALANCE

Copyright ASME International
Provided by IHS under license with ASME
No reproduction or networking permitted without license from IHS Not for Resale

The input/output method uses the equation:

$$efficiency = \frac{output}{input} * 100$$

Efficiency determination by the input/output method requires direct and accurate measurement of all output as well as all input. The primary measurements required are the following:

- feedwater flow rate entering the steam generator
- desuperheating water flow rates
- flow rates of all secondary output streams such as boiler blowdown, auxiliary steam, etc.
- pressure and temperature of all working fluid streams such as entering feedwater, superheater outlet, reheater inlet and outlets, auxiliary steam, etc.
- additional measurements in the turbine cycle as required to determine reheater flows by energy balance methods
- fuel flow rate
- higher heating value of the fuel
- waste energy input

Further measurements may be required to determine other input credits; however, they usually have a minor effect on the results.

The energy balance method combines the energy balance equation

$$input + credits = output + losses$$

with the efficiency definition to arrive at

$$efficiency = \left(\frac{input - losses + credits}{input}\right) * 100$$

$$= \left(1 - \frac{(losses - credits)}{input}\right) * 100$$

Efficiency determination by the energy balance method requires the identification and measurement (or estimation) of all losses. Figure 3.1-1 illustrates these losses. The primary measurements for efficiency determination by the energy balance method are chemical analysis of the fuel, sorbent, residue, and flue gas; the higher heating value of the fuel; and air and flue gas temperatures.

Many other measurements are required to determine values for all of the losses; however, several of them usually have a minor effect on the results. In many cases, parties to the test may agree to estimate values for certain losses, rather than measuring them; however, the uncertainties of estimated values are usually greater than if the values were measured. Losses are sometimes determined on a "percent input" basis rather than an absolute basis.

Advantages and disadvantages of the input/output and energy balance methods are listed in Table 3.1-1. In many cases, the energy balance method yields lower overall test uncertainty because the quantities used to determine efficiency by the energy balance method, i.e., losses, are a much smaller portion of the total energy than is output, which is used to determine efficiency in the input/output method. Thus, a given uncertainty in measured or estimated values has less effect on the result in the energy balance method [4]. The energy balance method also provides a means of examining the losses to determine potential improvements to the unit or its operation. The energy balance method allows for corrections of test results to standard or guarantee conditions. Accordingly, this Code recommends the energy balance method to determine efficiency when corrections to such conditions are required. In other cases, the choice between the methods should be based upon the available instrumentation and expected test uncertainty.

3.1.4 Unit Design and Construction Considerations to Facilitate Testing. Early planning and frequent follow-up during design and construction of a steam generating unit will help to minimize testing problems and ensure that tests can be performed in accordance with this Code after construction is complete. Ideally, provisions for conducting both acceptance tests and routine performance tests should be included in the design of a unit. Even if it is decided not to run an acceptance test, the provisions will be valuable for gathering information on the unit's operation and performance.

This Code should be used as a guide during preliminary engineering to determine the required test points and sampling provisions. This determination will normally require interaction between the intended parties to the test. The required test points and sampling provisions should be included in the specifications. Periodic reviews during design and construction should ensure that field installation does not jeopardize the test provisions.

One of the problems most commonly encountered in the performance of measurements during testing is interference with other structures. Thermowells, pressure taps, and duct ports for air and gas measurements should be oriented so that test instruments can be installed as required. Bracing and support beam interference with duct sampling must be considered. On large

Copyright ASME International
Provided by IHS under license with ASME
No reproduction or networking permitted without license from IHS Not for Resale

TABLE 3.1-1
COMPARISON OF EFFICIENCY DETERMINATION

Advantages	Disadvantages
Input/Output Method	
Primary parameters from the efficiency definition (output, input) are directly measured	Fuel flow and fuel heating value, steam flow rates, and steam properties need to be measured very accurately to minimize uncertainty
Requires fewer measurements	
Does not require estimation of unmeasurable losses	Does not aid in locating source of possible inefficiency
	Requires the use of energy balance calculation methodology for correction of test results to standard or guarantee conditions. Corrections to standard or guarantee conditions can only be made using the energy balance methodology.
Energy Balance Method	
The primary measurements (flue gas analyses and flue gas temperature) can be made very accurately	Requires more measurements
	Does not automatically yield capacity and output data
Permits corrections of test results to standard or guarantee conditions	Some losses are practically unmeasurable and value must be estimated
The as-tested efficiency often has lower uncertainty because the measured quantities (losses) represent only a small fraction of the total energy	
The effects of fairly substantial errors in secondary measurements and estimated values are minimal	
Sources of large losses are identified	

ducts, overhead clearance for insertion of long sampling probes must also be considered.

Provisions should be made for obtaining the necessary samples of fly ash, bottom ash, pulverizer rejects, sorbent, and fuel. The equipment and procedures to be used in obtaining the samples should be considered in the design of sampling provisions.

Provisions should be made for measurement of auxiliary power used in determining energy credits.

Consideration should be given to the needs of personnel and instrumentation involved in conducting the test. Examples include safe access to test point locations, availability of suitable utilities, and safe work areas for personnel. Potential damage to instrumentation resulting from extreme ambient conditions such as high temperature and vibration should be considered.

3.2 PERFORMANCE TEST PROCEDURES

3.2.1 Determination of Level of Test. Accurate determination of the performance of a steam generator requires a significant expenditure of time and money. Many measurements are required to account for all losses, especially in the determination of efficiency by the energy balance method. At the same time, each individual loss or an error in its determination may have only a small effect on the results or their uncertainty.

It has long been recognized that no single set of procedures can yield the most cost-effective test for all cases. Previous editions of this Code provided for two different levels of test for tests that used the energy balance method. One level was a complete test in which all losses were determined from measurements. The other was an abbreviated test in which only major

Copyright ASME International
Provided by IHS under license with ASME
No reproduction or networking permitted without license from IHS
Not for Resale

losses were determined from measurements while several minor losses were ignored or aggregated into an unmeasured loss term with an estimated numerical value.

This Code permits the parties to elect various levels of testing. While all necessary procedures are specified for the most accurate determination of steam generator performance, the parties to the test are permitted to design a lower level test if appropriate. Typically, a lower level test uses less accurate instruments or fewer instruments or will use assumed or estimated values for certain parameters rather than measuring them. This Code requires calculation of the uncertainties of the results to define the quality level of the test:

- By agreement prior to the test, the parties to the test shall define acceptable values for the uncertainties of the results (for example, they may decide that efficiency will be determined with an uncertainty of ±0.5% and that maximum capacity will be determined with an uncertainty of ±1.0% of the value). These values are called the target uncertainties of the results.
- A performance test must be designed to meet the target uncertainties. The choices of which parameters to measure, which parameters may be estimated, what estimated values to use, and the use of fewer or alternative instruments will strongly influence the ability to meet target uncertainties. Parties to the test should reach agreement on these choices prior to the test. A pretest uncertainty analysis, described in Section 7.3, is strongly recommended to aid in this process.
- The parties to the test shall reach prior agreement on the uncertainties of values that will not be measured and on the bias limits of instruments and measurement methods. This agreement shall be documented in the written agreement required by Subsection 3.2.3.
- After each run has been conducted, the uncertainties of the results must be calculated in accordance with Section 7 and PTC 19.1, as appropriate. If the uncertainties thus calculated are greater than the previously agreed upon target uncertainty values, the run is invalid.

It is strongly emphasized that the test uncertainties thus calculated are not tolerances on steam generator performance. The uncertainties are to be used to judge only the quality of the performance test and not the acceptability of the steam generator.

3.2.2 Number of Runs. A run is a complete set of observations made over a period of time with one or more of the independent variables maintained virtually constant. A test is a single run or the combination of a series of runs for the purpose of determining performance characteristics. A test normally consists of two or more runs.

Conducting more than one run will verify the repeatability of the test results. Results may not be repeatable due to variations in either the test methodology (test variations) or the actual performance of the equipment being tested (process variations). It is recommended that, at the end of each run that meets the criteria for an acceptable run, the data be consolidated and preliminary results calculated and examined to ensure the results are reasonable. If the parties to the test agree, the test may be concluded at the end of any run.

3.2.2.1 Repeatability. The criterion for repeatability between runs is that the normalized results of two or more runs all lie within the uncertainty intervals of each other. Refer to Fig. 3.2-1 for examples of runs that meet or do not meet this criterion. The results should be normalized to a base set of conditions. For example, efficiency for different runs should be calculated using a single representative fuel analysis and should be normalized for inlet air temperature, etc. Refer to Section 5.18. The uncertainty interval calculated for each run is applied to the normalized result for that run for the purpose of evaluating repeatability between runs.

3.2.2.2 Invalidation of Runs. If serious inconsistencies affecting the results are detected during a run or during the calculation of the results, the run must be invalidated completely, or it may be invalidated only in part if the affected part is at the beginning or at the end of the run. A run that has been invalidated must be repeated, if necessary, to attain the test objectives. The decision to reject a run is the responsibility of the designated representatives of the parties to the test.

3.2.2.3 Multiple Runs. The results of multiple runs that meet the criteria for repeatability and other Code requirements are averaged to determine the average test result. The uncertainties shall be reported for each individual run but shall not be reported for the average test result.

3.2.3 Prior Agreements. Prior to the test, the parties to the test shall prepare a definite written agreement. This agreement shall state the specific test objectives including the acceptable range of uncertainty for each result, as well as the method of operation during the test. For acceptance tests, the agreement shall identify any contract requirements pertinent to the test objectives, e.g., guarantee provisions, and it must include estimated values or other clarifications necessary to resolve any omissions or ambiguities in the contract.

Copyright ASME International
Provided by IHS under license with ASME
No reproduction or networking permitted without license from IHS Not for Resale

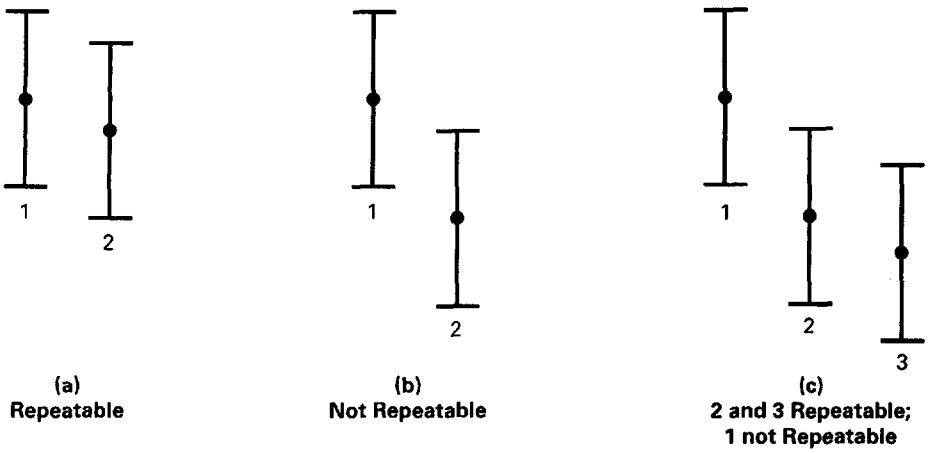

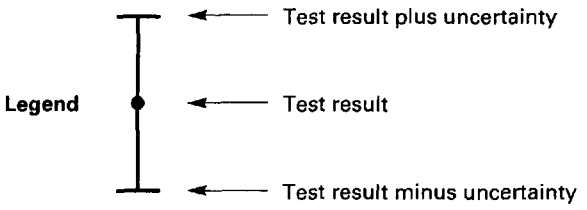

FIG. 3.2-1 REPEATABILITY OF RUNS

This written agreement shall specifically include the following items and should also address other items considered pertinent by the parties to the test. For routine performance tests, some items may not be applicable and may be omitted:

- test objectives (e.g., efficiency, steam temperature)
- designation of a chief-of-test who will direct the test and exercise authority over all test personnel, preferably a registered professional engineer with previous testing and power plant experience, good organizational skills, and a thorough understanding of instrumentation and uncertainty analysis
- designation of representatives from each party to the test
- organization, qualifications, and training of test personnel; arrangements for their direction; arrangements for calculating the test results
- interpretation of any relevant contract requirements
- target test uncertainties (Table 1.3-1 provides typical values for efficiency tests for various types of steam generators)
- whether to conduct a pretest uncertainty analysis and how to apply results of the analysis to improve the test (refer to Subsection 3.2.5.1)
- number of runs
- pretest checkout procedures
- establishment of acceptable operating conditions, allowable variance in operating conditions during the run (based on Table 3.2-1), number of load points, duration of runs, basis for rejection of runs, and procedures to be followed during the test
- means for maintaining constant test conditions
- maximum permissible deviation of average values of controlled parameters from target values during the test
- unit cleanliness prior to the test and how cleanliness is to be maintained during the test (including any soot blowing to be conducted during the test)
- readings and observations to be taken; number and frequency.
- number, location, type, and calibration of instruments
- bias limits of instruments and measurement methods, models for estimating bias, and any precision indexes that are to be set by agreement (refer to Section 7)

Copyright ASME International
Provided by IHS under license with ASME
No reproduction or networking permitted without license from IHS
Not for Resale

TABLE 3.2-1
OPERATING PARAMETER DEVIATIONS

Parameters	Short-Term Fluctuation (Peak to Valley)	Long-Term Deviation
Controlled Parameter		
Steam Pressure		
> 500 psi set point	4% (25 psi max)	3% (40 psi max)
< 500 psi set point	20 psi	15 psi
Feedwater Flow (Drum Unit)	10%	3%
Steam Flow (Once-Through Unit)	4%	3%
O_2 Leaving Boiler/Economizer (by Volume)		
Oil and gas units	0.4 (points of O_2)	0.2 (points of O_2)
Coal units	1.0 (points of O_2)	0.5 (points of O_2)
Steam Temperature (If Controlled)	20°F	10°F
Superheat/Reheat Spray Flow	40% Spray Flow or 2% Main Steam Flow	N/A
Fuel Flow (If Measured)	10%	N/A
Feedwater Temperature	20°F	10°F
Fuel Bed Depth (Stoker)	2 in.	1 in.
Sorbent/Coal Ratio (Feeder Speed Ratio) [Note (1)]	4%	2%
Ash Reinjection Flow	20%	10%
Bed Temperature (Spatial Average/per Compartment) [Note (1)]	50°F	25°F
Bed/Unit Operating Solids Inventory [Note (1)]		
Bed pressure	4 in. wg	3 in. wg
Dilute phase pressure drop	4 in. wg	3 in. wg
Dependedent Parameters		
Steam Flow	4%	3%
SO_2 (Units with Sulfur Removal)	150 ppm	75 ppm
CO (If Measured)	150 ppm	50 ppm
Freeboard Temperature (If Measured)	50°F	25°F

GENERAL NOTE:
N/A – Not Applicable.

NOTE:
(1) Applicable to fluid bed units only.

- parameters to be estimated rather than measured, estimated values to be used, and uncertainties of estimated values
- efficiency determination:
  - — energy balance or input-output method
  - — parameters to be measured
  - — estimated values to be used for unmeasured parameters
  - — exiting streams to be included in output
  - — steam or water flow measurement
  - — duration
- capacity determination:
  - — exiting streams to be included in capacity
  - — steam or water flow measurement
  - — duration
- peak capacity determination:
  - — time limit for operation at peak capacity
  - — specific steam pressures (and temperatures for superheated steam generators) which define peak capacity operation
  - — feedwater pressure and temperature
  - — blowdown rate
- fuel to be fired, method and frequency of obtaining fuel samples, laboratory which will make the fuel analyses, and fuel test method to be used
- equivalence of fuel to standard or contract conditions or procedures for correcting to those conditions
- procedures to be used for sampling and analysis of sorbent and the target sorbent to sulfur ratio (Ca/S molar ratio)

Copyright ASME International
Provided by IHS under license with ASME
No reproduction or networking permitted without license from IHS
Not for Resale

- distribution of residue quantities between various collection points and methods of residue sampling and analysis
- procedures to be used for flue gas sampling and analysis
- whether to determine the need for and methods of flow weighting for flue gas temperature and oxygen content
- method for determining outliers
- corrections to be used for comparison to contract conditions, including any correction curves
- media, methods, and format to be used for recording data and providing copies for parties to the test (refer to Subsection 3.2.8)

3.2.4 Acceptance Test. An acceptance test should be conducted as soon as practical after initial operation of the unit or in accordance with the contract requirements.

Designated representatives of the parties to the test are encouraged to be present to verify that the test is conducted in accordance with this Code and the agreements made prior to the test.

3.2.5 Preparation for the Test

3.2.5.1 Pretest Uncertainty Analysis. A pretest uncertainty analysis should be performed to confirm that the test, as it has been designed and planned, is capable of achieving the target test uncertainties. This uncertainty analysis will help avoid the possibility of conducting a test that does not achieve the target test uncertainties and thus cannot be considered a Code test. In addition to indicating whether the target test uncertainties can be achieved, the pretest uncertainty analysis provides information which can be used to design a more cost-effective test which can still achieve the test uncertainty targets, or it enables setting achievable uncertainty targets.

A sensitivity analysis should be performed as part of the pretest uncertainty analysis to determine the relative sensitivity coefficients, i.e., the relationships of overall test uncertainties to the uncertainty of each parameter for which a value will be either measured or estimated (refer to Sections 5 and 7). All parameters for which the relative sensitivity coefficient is greater than 5% of the value of the highest sensitivity coefficient are considered critical parameters. All critical parameters should be measured using accurate instruments. These instruments should be selected and calibrated in accordance with the criteria in Section 4. However, proper installation of the instruments and proper implementation of the chosen sampling schemes are at least as important as proper calibration in assuring that target test uncertainties are attainable. The sensitivity analysis may also provide opportunities for economies in conducting the test by identifying parameters which are less critical to attainment of target test uncertainties. These parameters might then be candidates for measurement by lower quality instruments and/or the existing plant instrumentation, or they might be considered for estimation of values rather than measurement.

Section 7 provides guidance for conducting uncertainty analysis including determination of sensitivity coefficients.

3.2.5.2 Pretest Checkout. Prior to initiating the test, the following actions must be taken to ensure the steam generator is ready for the test and to help avoid problems which might invalidate the test:

- Parties shall agree that the fuel, sorbent, and additives to be used during the test are satisfactory for the test (refer to Appendix E).
- Any departures from standard or previously specified conditions in the physical state of equipment, cleanliness of heating surfaces, fuel characteristics, or stability of load must be noted and corrected if possible.
- A complete record shall be made, fully identifying the equipment to be tested and the selected testing method.
- All instruments must be checked for proper installation and for operability.
- Parties to the test shall agree that the steam generator is ready for testing, i.e., that its configuration and conditions conform to those specified in the pretest agreement.

In addition to these mandatory actions, the entire steam generator should be visually inspected for abnormal air infiltration. Air heater internal leakage should also be checked (refer to PTC 4.3). Mechanical discrepancies that may contribute to excessive leakage should be corrected prior to the test.

3.2.5.3 Preliminary Run. A preliminary run should be made for the following purposes:

- determining whether the steam generator and the overall plant are in a suitable condition for conducting the test
- making minor adjustments which were not foreseen during preparation for the test, establishing proper combustion conditions for the particular fuel and firing rate to be employed, and confirming that specified operating conditions and stability (in accordance with Subsection 3.2.6.1) are attainable
- checking instruments
- verifying attainability of the target test uncertainty
- acquainting test personnel with the specific facility, test instruments, and procedures

Copyright ASME International
Provided by IHS under license with ASME
No reproduction or networking permitted without license from IHS

Not for Resale

After a preliminary run has been made, it may be declared a test run if agreed to by the parties to the test, provided all the requirements of a test run have been met.

3.2.6 Method of Operation During Test

3.2.6.1 Stability of Test Conditions. Prior to any test run, the equipment must be operated for a sufficient time to establish steady-state conditions. Steady-state sometimes implies that all input and output characteristics, as well as all internal characteristics, do not vary with time. This definition of steady-state is overly restrictive for the purposes of this Code. Steady-state is defined by this Code as an operating condition in which the system is at thermal and chemical equilibrium.

The criterion for thermal equilibrium is that, during the period of the test, there is no net change in energy stored inside the steam generator envelope. Energy can be stored in the water and steam, and in metal, refractories, and other solid materials within the steam generator. If the steam generator is at thermal equilibrium during the test, the average input and average output can be properly calculated and compared. For circulating fluidized bed units, thermal equilibrium includes the requirement that size equilibrium of the recirculating solids be established. The ultimate criterion for steady-state is that the average of the data during the test represents equilibrium between the fuel input and steam generator output.

Fluidized bed units that utilize limestone or other sorbent for reducing sulfur (or other) emissions have a large inventory of reactive material that must reach chemical equilibrium, including the recycled material from hoppers and hold-up bins. To achieve equilibrium between the calcium oxide (CaO) in the unit and sulfur in the fuel (sulfation), the sorbent to fuel ratio during the stabilization period shall be maintained within ±5% of the targeted ratio for the test.

The following are minimum pretest stabilization times typically required for various types of units:

- pulverized coal and gas/oil fired units — 1 hr
- stoker units — 4 hr
- fluidized bed units — 24 to 48 hr

The purpose of the pretest stabilization period is to establish thermal, chemical, and recirculated material size equilibrium of the system at the test conditions. Minor adjustments to operating conditions are permitted as long as they do not interfere with safe operation. However, the entire steam generator should be essentially at test conditions throughout the entire stabilization period. The actual stabilization time required will depend upon the specific unit operating characteristics and the quality of the control system. Table 3.2-1 provides criteria for stability of operating parameters which are indicative of units which have reached equilibrium. For fluidized bed units that use an inert bed material such as sand, the stoker unit criteria should be used. For fluidized bed units which have already been operating at the specified sorbent/fuel ratio for at least 24 hr, a 4 hr stabilization period is sufficient as long as the stability criteria of Table 3.2-1 are met.

Stability is attained when the agreed upon pretest stabilization period has been completed and monitoring indicates the controlled and dependent parameters are maintained within agreed upon maximum operating parameter deviations. The pretest agreement shall include a table of allowable maximum variations in operating parameters similar to Table 3.2-1. Values shown in Table 3.2-1 are typical and may be used directly or modified by agreement between parties to the test. For units utilizing limestone or other sorbent for reducing sulfur emissions, the SO_2 should be monitored continuously and used as an indication of chemical equilibrium between the bed and recycled material, i.e., the SO_2 trend should be reasonably flat. For circulating fluidized bed units, complying with the pretest stabilization period is the primary means of assuring chemical and mechanical equilibrium. Monitoring the dilute phase pressure drop provides a good indicator. Since relative changes are sought, plant instrumentation is acceptable for these trend measurements.

All parameters in Table 3.2-1, and any other conditions designated by the parties to the test in which variations might affect the results of the test, should be, as nearly as possible, the same at the end of the run as at the beginning. However, the primary criterion for steady-state is that the average of the data reflects equilibrium between input from fuel and steam generator output. Thus, gradual changes in the critical operating parameters over a significantly long test period are not necessarily grounds for rejecting a test.

During a complete test run, each observation of an operating condition shall not vary from the reported average for that operating condition by more than the allowable value under the "Long-Term Deviation" column of Table 3.2-1, and the maximum variation between any peak and an adjacent valley in the data shall not exceed the limit shown in the "Short-Term Fluctuation" column. An illustration of the application of these limits is provided on Fig. 3.2-2. These limits may be modified by the parties to the test but, in any event, the established limits shall be tabulated in the pretest agreement. If operating conditions vary during any test run beyond the limits prescribed in that table, the test run is invalid unless the parties to the test agree

Copyright ASME International
Provided by IHS under license with ASME
No reproduction or networking permitted without license from IHS Not for Resale

TABLE 3.2-2
MINIMUM TEST RUN DURATION

Type of Steam Generating Unit	Energy Balance, hr	Input/Output, hr
Gas/Oil	2	2
Stoker	4	10
Pulverized Coal	4	8
Fluidized Bed	4	8

to allow the deviation. Any such allowed deviations shall be explained in the test report.

3.2.6.2 Duration of Test Runs. The duration of a test run must be of sufficient length that the data reflect the average efficiency and/or performance of the unit. This includes consideration for deviations in the measurable parameters due to controls, fuel, and typical unit operating characteristics. The test duration shall not be less than that tabulated in Table 3.2-2.

The chief-of-test and the parties to the test may determine that a longer test period is required. The minimum times shown in Table 3.2-2 are generally based upon continuous data acquisition and utilization

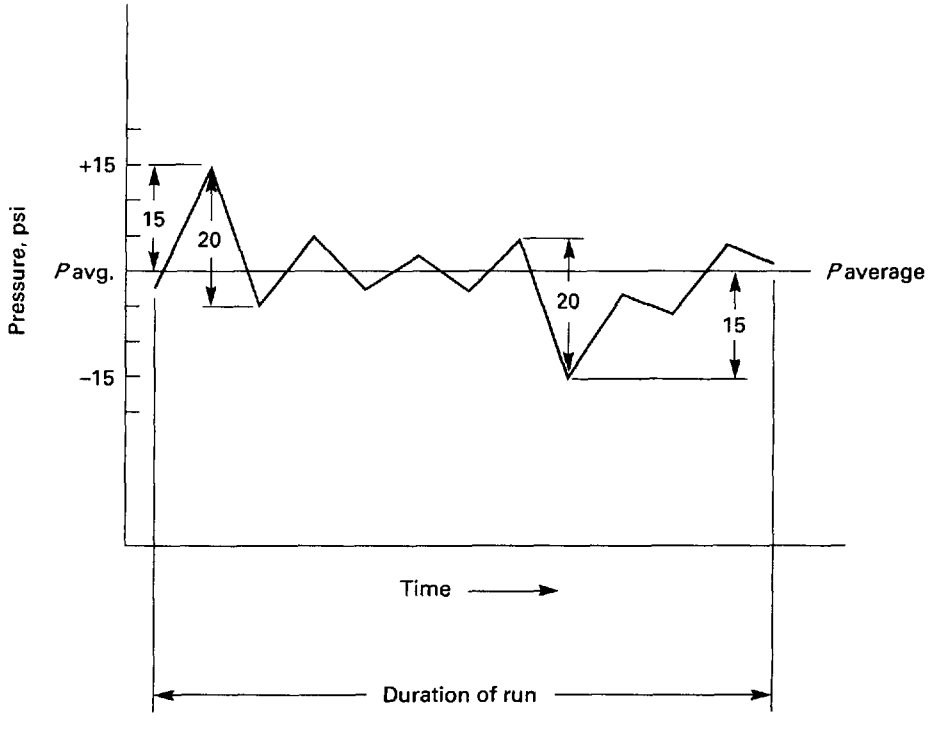

GENERAL NOTE: From Table 3.2-1: controlled parameter steam pressure less than 500 psi set point; peak to valley 20 psi maximum short term (peak to valley) fluctuation; maximum long term deviation ±15 psi; *P*avg. is arithmetic average of data recorded.

FIG. 3.2-2 ILLUSTRATION OF SHORT-TERM (PEAK TO VALLEY) FLUCTUATION AND LONG-TERM DEVIATION

Copyright ASME International
Provided by IHS under license with ASME
No reproduction or networking permitted without license from IHS
Not for Resale

of composite gas sampling grids. Depending upon the personnel available and the method of data acquisition, it may be necessary to increase the length of a test to obtain a sufficient number of samples of the measured parameters to achieve the required test uncertainty. When point by point traverses of large ducts are utilized, the test run should be long enough to complete at least two full traverses. Test runs using blended or waste fuels may also require longer durations if variations in the fuel are significant.

The duration of runs to determine the maximum short period output, when the efficiency is not to be determined, shall be set by agreement of the parties to the test.

The actual duration of all runs from which the final test data are derived shall be recorded.

3.2.6.3 Considerations for Conducting the Test. Each test run should be conducted with the steam generator operating as closely as possible to the specified conditions to avoid the application of corrections to the test results or to minimize the magnitude of the corrections. Critical considerations include type of fuel, flow rates, pressures, and temperatures. For stoker and fluidized bed units, it is particularly important to maintain constant coal quality and size distribution to ensure stability of operating conditions. For units utilizing sorbent, the sorbent to fuel ratio (Ca/S molar ratio) is also particularly important.

The pretest stabilization period, deviation of critical parameters during the test period, and criteria for rejection of tests are defined by the criteria in Subsection 3.2.6.1.

A test operations coordinator should be assigned to facilitate communication between the steam generator operator(s) and the parties to the test. The steam generator operator(s) should be apprised of his responsibilities with respect to the test. This includes the requirements of the pretest stabilization period as well as the specified maximum deviation of critical operating parameters. Communications between the test operations coordinator and the operator(s) should be such that, except under emergency operating situations, the test operations coordinator is consulted prior to changing operating parameters.

If soot blowing would normally be used during the period of a test run, it should be used during the conduct of each test run. The pretest agreement shall define the soot blowing plan for each run. Any soot blowing conducted during a test run shall be recorded and included in the analysis of the test results.

For stoker fired units with a stationary grate, it is essential that major cleaning and conditioning of the fuel bed be accomplished some time before the run starts and again the same length of time before the run is completed. Normal cleaning of the fuel bed is permitted during the run. The ash pit must be emptied either just after the initial and final cleaning and conditioning of the fuel bed or just before the start and end of the run so that the quantity of residue corresponds to the quantity of fuel burned.

In the case of runs to determine the maximum output at which the unit can be operated for a short period, the run should be started as soon as the maximum output is reached and continue until the specified duration of the run is reached unless conditions necessitate terminating the run earlier. Refer to Subsection 3.2.6.2.

3.2.6.4 Frequency of Observations. The following measurement and sampling frequencies are recommended for use during a test. The frequencies may be increased or decreased based on a pretest uncertainty analysis. Refer to Sections 4, 5, and 7 for additional information:

- Readings should be taken at intervals of 15 min or less for all measurements except quantity measurements. Continuous monitoring is permissible.
- If the amount of fuel or feedwater is determined from integrating instruments, the readings should be taken at 1 hr intervals.
- If the quantities to be determined are weighed, the frequency of weighing is usually determined by the capacity of the scales, but the intervals should be such that a total can be obtained for each hour of the test.
- When differential pressure measurement devices are used with venturi tubes, flow nozzles, or orifice plates for subsequently determining quantity measurements, the flow indicating element should be read at intervals of 5 min or less.
- Fuel and residue samples should be taken in accordance with guidance in Section 4.

3.2.6.5 Performance Curves. If runs are made at different outputs, curves may be drawn to relate the test parameters to output. Such curves are useful in appraising the performance of the unit, because the desired outputs are seldom exactly obtained during the test. If there are enough test points to establish characteristic curves, the performance corresponding to intermediate levels of output may be read from the curves.

3.2.7 Corrections to Test Results. Operating conditions at the time of the test may differ from the standard or specified conditions which were used to establish design or guarantee performance levels. Section 5 provides methods for applying corrections during the calcu-

Copyright ASME International
Provided by IHS under license with ASME
No reproduction or networking permitted without license from IHS
Not for Resale

lation of test results to account for many of these differences. Correction factors may be obtained from various sources such as tables, correction curves, or manufacturer's design data. Parties to the test shall record their agreement on the sources of any correction factors to be used and the methods for their application. This Code does not provide a method for calculating the uncertainty of corrected results. Uncertainties calculated in accordance with this Code apply to as-measured results only. A procedure for calculating the uncertainty of corrected results will be provided in a future addendum to this Code when related technical issues are resolved.

3.2.8 Records and Test Reports. Computer data logging is preferred to manual recording, provided all required points are recorded. Following completion of the test, a permanent record of the data shall be submitted in a mutually agreed upon format to each party of the test.

Any manually recorded data shall be entered on previously prepared forms which constitute original log sheets and shall be authenticated by the observers' signatures. Each party to the test shall be given a complete set of unaltered log sheets, recorded charts, or facsimiles. The observations shall include the date and time of day. They shall be the actual readings without application of any instrument calibration corrections. The log sheets and any recorded charts constitute a complete record of the test. It is recommended that sufficient space be left at the bottom of each log sheet to record average reading, correction for instrument calibration, and conversion to desired units for calculations.

Records made during tests must show the extent of fluctuations (i.e., minimum and maximum values of instrument readings) of the instruments so that data will be available for use in determining the influence of such fluctuations on the uncertainty of calculated results.

Every event connected with the progress of a test, however unimportant it may appear at the time, should be recorded on the test log sheets together with the time of occurrence and the name of the observer. Particular care should be taken to record any adjustments made to any equipment under test, whether made during a run or between runs. The reason for each adjustment shall be stated in the test record.

3.3 REFERENCES TO OTHER CODES AND STANDARDS

The necessary instruments and procedures for making measurements are prescribed in Section 4 and should be used in conjunction with the following ASME Performance Test Codes and Supplements on Instruments and Apparatus and other pertinent publications for detailed specifications on apparatus and procedures involved in the testing of steam generating units. These references are based upon the latest information available when this Code was published. In all cases, care should be exercised to refer to the latest revision of the document.

3.3.1 ASME Performance Test Codes

- General Instructions, PTC 1
- Definitions and Values, PTC 2
- Diesel and Burner Fuels, PTC 3.1
- Coal and Coke, PTC 3.2
- Gaseous Fuels, PTC 3.3
- Coal Pulverizers, PTC 4.2
- Air Heaters, PTC 4.3
- Gas Turbine Heat Recovery Steam Generators, PTC 4.4
- Steam Turbines, PTC 6
- Compressors and Exhausters, PTC 10
- Fans, PTC 11
- Instruments and Apparatus: Part 1 Measurement Uncertainty, PTC 19.1
- Instruments and Apparatus: Part 2 Pressure Measurement, PTC 19.2
- Temperature Measurement, PTC 19.3
- Application, Part II of Fluid Meters: Interim Supplement on Instruments and Apparatus, PTC 19.5

NOTE: At the time this Code was published, a revision of PTC 19.5 was being prepared. This revised version or a later version should be consulted.

- Measurement of Shaft Power, PTC 19.7
- Flue and Exhaust Gas Analyses, PTC 19.10
- Steam and Water Sampling, Conditioning, and Analysis in the Power Cycle, PTC 19.11
- Particulate Matter Collection Equipment, PTC 21
- Gas Turbine PTC 22
- Determination of the Concentration of Particulate Matter in a Gas Stream, PTC 38

3.3.2 ASME Standards

- Measurement of Fluid Flow in Pipes Using Orifice, Nozzle, and Venturi, MFC-3M
- Measurement of Gas Flow by Turbine Meters, MFC-4M

3.3.3 ASTM Standard Methods

- Test Method for Chemical Analysis of Limestone, Quicklime, and Hydrated Lime, C 25
- Test Method for Heat of Combustion of Liquid Hydrocarbon Fuels by Bomb Calorimeter, D 240

Copyright ASME International
Provided by IHS under license with ASME
No reproduction or networking permitted without license from IHS
Not for Resale

- Practice for Collection and Preparation of Coke Samples for Laboratory Analysis, D 346
- Test Methods for Collection of a Gross Sample of Coal, D 2234
- Test Method for Carbon Dioxide in Coal, D 1756
- Test Method for Gross Calorific Value, D 1989, D 2015, D 3286
- Method of Preparing Coal Sample for Analysis, D 2013
- Test Method for Heat of Combustion of Hydrocarbon Fuels by Bomb Calorimeter, D 4809
- Test Methods for Forms of Sulfur in Coal, D 2492
- Practice for Ultimate Analysis of Coal and Coke, D 3176
- Test Methods for Instrumental Determination of Carbon, Hydrogen, and Nitrogen in Laboratory Samples of Carbon and Coke, D 5373
- Method for Calculating Calorific Value and Specific Gravity (Relative Density) of Gaseous Fuels, D 3588
- Test Method for Major and Minor Elements in Coal and Coke Ash by X-Ray Fluorescence, D 4326
- Test Method for Total Moisture in Coal, D 3302
- Test Method for Ash in the Analysis Sample of Coal and Coke from Coal, D 3174
- Practice for Calculating Coal and Coke Analyses from As-Determined to Different Bases, D 3180
- Test Method for Total Sulfur in the Analysis Sample of Coal and Coke, D 3177
- Test Method for Sulfur in the Analysis Sample of Coal and Coke Using High Temperature Tube Furnace Combustion Methods, D 4239
- Test Method for the Proximate Analysis of the Analysis Sample of Coal and Coke by Instrumental Procedures, D 5142
- Practice for Manual Sampling of Petroleum and Petroleum Products, D 4057
- Test Method for Water in Petroleum Products and Bituminous Materials by Distillation, D 95
- Test Method for Ash from Petroleum Products, D 482
- Practice for Density, Relative Density (Specific Gravity), or API Gravity of Crude Petroleum and Liquid Petroleum Products by Hydrometer Method, D 1298
- Test Method for Sulfur in Petroleum Products (High-Temperature Method), D 1552
- Test Method for Calorific Value of Gases in Natural Gas Range by Continuous Recording Calorimeter, D 1826
- Test Method for Analysis of Natural Gas by Gas Chromatography, D 1945
- Method for Calculating Calorific Value and Specific Gravity (Relative Density) of Gaseous Fuels, D 3588
- Practice for Automatic Sampling of Gaseous Fuels, D 5287

3.3.4 IEEE Standards

- IEEE Master Test Guide for Electrical Measurements in Power Circuits, ANSI/IEEE Standard 120-1989

3.3.5 National Institute of Standards and Technology

- Methods of Measuring Humidity and Testing Hygrometers, Circular 512

3.3.6 International Organization for Standardization

- Flow Measurement, ISO 5167

3.4 TOLERANCES AND TEST UNCERTAINTIES

Tolerances or margins on performance guarantees are not within the scope of this Code. The test results shall be reported as computed from test observations, with proper corrections for calibrations. The uncertainties of the test results shall be calculated in accordance with Sections 5 and 7. The calculated uncertainties shall be reported with the results of the test and the uncertainty analysis shall be part of the record of the test. Test uncertainties are to be used only for evaluating the quality of the test and the accuracy of the test results. They are not tolerances on performance.

Copyright ASME International
Provided by IHS under license with ASME
No reproduction or networking permitted without license from IHS
Not for Resale

STD·ASME PTC 4-ENGL 1998 ■ 0759670 0614974 135 ■

SECTION 4 — INSTRUMENTS AND METHODS OF MEASUREMENT

4.1 GUIDING PRINCIPLES

This Section provides guidance in test measurement. When planning a test, the engineer has many choices regarding the parameters to be measured, the method of measurement, calculations, assumptions, and values for any assumed variables. Because the technology of test measurement is constantly improving, this Code permits flexibility in the design and selection of test instrumentation, yet maintains a prescribed quality level. A test can be designed within the guidelines provided here to suit the particular needs and objectives of all parties to the test.

This Section addresses three items:

- For each Code objective, the parameters needed to compute the final result are identified.
- The relative importance of each parameter is indicated, and several methods for quantifying the parameter are identified.
- Appropriate bias limits are suggested for each method used to measure the required parameters.

It is the test engineer's responsibility to select the method for measuring each parameter which, when considered with all the other parameters, produces results within the uncertainty requirements of the test. In this Code, where there is a choice among several methods, a preferred method is identified. If a preferred procedure is not selected, the increased bias is quantified for the chosen method. Section 7.5 discusses methods for estimating such biases. Bias limits shall be agreed upon by all parties to the test.

4.2 DATA REQUIRED

This Code addresses the methodology to determine separate performance characteristics including the following:

- efficiency
- output
- capacity
- steam temperature/control range
- exit flue gas and air entering temperatures
- excess air
- water/steam pressure drops
- air/flue gas pressure drops
- air infiltration
- sulfur capture/retention
- calcium to sulfur molar ratio
- fuel, air, and flue gas flows

Tables 4.2-1 through 4.2-12 list the parameters required to determine each of these performance characteristics for typical units as defined by the Steam Generator System Boundaries on Figs. 1.4-1 through 1.4-7 in Section 1. Each table lists the parameters required, their relative importance, and the paragraph in this Section covering the applicable measurement procedure for the specific measurement/test objective. The user of this Code is responsible for identifying any features of the unit to be tested that are not included in the typical examples and for applying the principles of this Code for measuring the appropriate parameters to accomplish the objective of the test.

On the line with the major parameter, the "typical influence" and "typical source" entries relate to the major parameter. The typical sources are either measured, calculated, or estimated. *Measured* is intended to indicate the parameter as determined from direct observation of a physical property such as voltage in a thermocouple or flow from a measured differential pressure. *Calculated* indicates the parameter is inferred from other measured parameters and calculated based on engineering principles. Some examples are flow calculated from an energy balance or a flow determined by difference. *Estimated* indicates that the value of the parameter is estimated or agreed to by the parties to the test. In general, estimated means that a reasonable order of magnitude estimate can be made based on experience from similar units, or, preferably, on previous tests on the unit. Examples are a contractually agreed ash split or radiation loss.

In these tables, the "Typical Influence" column designates those parameters that typically have a major (primary) affect on the result and those items that are

Previous Page is Blank

Copyright ASME International
Provided by IHS under license with ASME
No reproduction or networking permitted without license from IHS
Not for Resale

TABLE 4.2-1
PARAMETERS REQUIRED FOR EFFICIENCY DETERMINATION BY ENERGY BALANCE METHOD

Calculation Acronym	Parameter	Reference Section	Typical Influence [Note (1)]	Typical Source [Note (2)]	Remarks
QpLDFg	DRY GAS LOSS	5.14.1	PRI		
	Fuel Analysis	4.12.3	PRI	M	
	% O_2 in Flue Gas	4.13.4	PRI	M	See Table 4.2-6
	Flue Gas Temperature	4.4.3	PRI	M	See Table 4.2-5
MpUbc	UNBURNED CARBON	5.10.3	SEC	M/E	See *QpLUbc,* Table 4.2.1
	% Carbon in Residue	4.12.3.5	PRI	M	
	Residue Split	4.7.8	PRI	C/M	
	Sorbent Analysis	4.12.3.2	PRI	M	
	Sorbent Rate	4.8	PRI	M	
	Fuel Rate	4.7.7	PRI	C/M	See Table 4.2-12
	% CO_2 in Residue	4.12.3.5	PRI	M	
	SO_2/O_2 in Flue Gas	4.13.4	PRI	M	See Table 4.2-10
QpLH2F	WATER FROM H2 IN FUEL LOSS	5.14.2	PRI	M	
	Fuel Analysis	4.12.3	PRI	M	
	Flue Gas Temperature	4.4.3	PRI	M	See Table 4.2-5
QpLWF	WATER FROM H_2O IN FUEL LOSS	5.14.2	PRI	M	
QpLWvF	Fuel Analysis	4.12.3	PRI	M	
	Flue Gas Temperature	4.4.3	PRI	M	See Table 4.2-5
QpLWA	MOISTURE IN AIR LOSS	5.14.3	SEC	M/E	
	Fuel Analysis	4.12.3	PRI	M	
	Flue Gas O_2	4.13.4	PRI	M	See Table 4.2-6
	Dry-Bulb Temperature	4.15	PRI	M	
	Wet-Bulb Temperature	4.15	PRI	M	
	Or Relative Humidity	4.15	PRI	M	
	Barometric Pressure	4.5.5	SEC	M	
	Flue Gas Temperature	4.4.3	PRI	M	See Table 4.2-5
QpLUbc	UNBURNED CARBON RESIDUE LOSS	5.14.4	PRI	M	
	Fuel Analysis	4.12.3	PRI	M	
	% Carbon in Residue	4.12.3.5	PRI	M	
	Residue Split	4.7.8	PRI	M	
	Sorbent Analysis	4.12.3	PRI	M	
	Sorbent Rate	4.8	PRI	M	See Table 4.2-12
	Fuel Rate	4.7.5	PRI	C/M	
	% CO_2 in Residue	4.12.3	PRI	M	See Table 4.2-10
	SO_2/O_2 in Flue Gas	4.13.4	PRI	M	
QpLH2Rs	UNBURNED H_2 IN RESIDUE LOSS	5.14.4	SEC	E	Normally zero
	Items for *QpLUbc*		PRI	M	See *QpLUbc,* Table 4.2-1
	% H2 in Residue	4.12.3	PRI	M	
QpLCO	CO IN FLUE GAS LOSS	5.14.4	SEC	M/E	
	Items for Excess Air		PRI	M	See Table 4.2-6
	CO in Flue Gas	4.13.3	PRI	M	
QpLPr	PULVERIZER REJECTS LOSS	5.14.4	SEC	E	
	Pulverizer Rejects Rate	4.7.5	PRI	M/E	
	Pulverizer Rejects Analysis	4.12.3	PRI	M/E	
	Pulverizer Outlet Temperature	4.4.3	PRI	M	
	Fuel Rate	4.7.7	PRI	C/M	See Table 4.2-12
	Fuel Analysis	4.12.3	PRI	M	
QpLUbHc	UNBURNED HYDROCARBONS IN FLUE GAS LOSS	5.14.4	SEC	E	
	Hydrocarbons in Flue Gas	4.13.4	PRI	M	
	HHV of Reference Gas	. . .	PRI	M	

(continued)

Copyright ASME International
Provided by IHS under license with ASME
No reproduction or networking permitted without license from IHS
Not for Resale

TABLE 4.2-1 (CONT'D)
PARAMETERS REQUIRED FOR EFFICIENCY DETERMINATION BY ENERGY BALANCE METHOD

Calculation Acronym	Parameter	Reference Section	Typical Influence [Note (1)]	Typical Source [Note (2)]	Remarks
QpLRs	SENSIBLE HEAT OF RESIDUE LOSS	5.14.5	PRI	M/E	
	Residue Split	4.7.8	PRI	M/C/E	
	Temp of Residue	4.4.5.1	PRI	M	
QpLAq	HOT AIR QUALITY CONTROL EQUIPMENT LOSS	5.14.6	PRI	M	
	Flue Gas Temperature Entering	4.4.3	PRI	M	
	Flue Gas Temperature Leaving	4.4.3	PRI	M	
	% O_2 in Flue Gas Entering	4.13.4	PRI	M	See Table 4.2-6
	% O_2 in Flue Gas Leaving	4.13.4	PRI	M	See Table 4.2-6
	Wet Gas Weight Entering	5.12.9	PRI	C	See Table 4.2-12
	Wet Gas Weight Leaving	5.12.9	PRI	C	See Table 4.2-12
QpLALg	AIR INFILTRATION LOSS	5.14.7	SEC	M	Normally N/A
	Infiltrating Airflow	5.14.7	PRI	M	See Table 4.2-12
	Infiltrating Air Temperature	4.4.3	PRI	M	
	Exit Gas Temperature	4.4.3	PRI	M	See Table 4.2-6
QpLNO$_x$	FORMATION OF NO_x LOSS	5.14.8	SEC	M/E	
	NO_x in Flue Gas	4.13.4	PRI	M/E	
	Wet Gas Weight	5.12.9	PRI	C	See Table 4.2-12
QrLSrc	RADIATION AND CONVECTION LOSS	5.14.9	PRI	M/E	Normally estimated based on suface area within envelope. See Subsection 5.14.9
	Steam Generator Surface Area	. . .	PRI	C	
	Local Ambient Air Temperature	4.4.3	PRI	M/E	
	Local Surface Temperature	4.4.3	PRI	M/E	
	Local Surface Air Velocity	4.7	PRI	E	
QrLWAd	ADDITIONAL MOISTURE LOSS	5.14.10	SEC	M/E	
	Mass Flow of Moisture	4.7.4	PRI	M/E	
	Flue Gas Temperature	4.4.3	PRI	M	See Table 4.2-5
	Feedwater Pressure	4.5.4	SEC	M	
	Feedwater Temperature	4.4.4	PRI	M	
	Fuel Flow	4.7.5/4.7.7	PRI	C/M	See Table 4.2-12
QrLClh	CALCINATION DEHYDRATION OF SORBENT LOSS	5.14.11	PRI	M	
	Sorbent Analysis	4.12.3	PRI	M	
	Fuel Rate	4.7.5/4.7.7	PRI	C/M	See Table 4.2-12
	% Carbon in Residue	4.12.3	PRI	M	
	% CO_2 in Residue	4.12.3	PRI	M	
	Residue Split	4.7.8	PRI	M/E	
	SO_2/O_2 in Flue Gas	4.13.4	PRI	M	See Table 4.2-10
QrLWSb	WATER IN SORBENT LOSS	5.14.12	SEC	M	
	Sorbent Analysis	4.12.3	PRI	M	
	Flue Gas Temperature	4.4.3	PRI	M	See Table 4.2-5
QrLAp *QrApW* *QrRsWLv*	WET ASH PIT LOSS	5.14.13	SEC	E	Normally estimated. See Section 5.14.14 for parameters required when measured.
QrLRy	RECYCLED STREAMS LOSS	5.14.14	SEC	M	
	Recycle Flow	4.7	PRI	M/E	
	Recycle Temperature Entering	4.4.3	PRI	M	See Table 4.2-5
	Recycle Temperature Leaving	4.4.3	PRI	M	

(continued)

Copyright ASME International
Provided by IHS under license with ASME
No reproduction or networking permitted without license from IHS Not for Resale

TABLE 4.2-1 (CONT'D)
PARAMETERS REQUIRED FOR EFFICIENCY DETERMINATION BY ENERGY BALANCE METHOD

Calculation Acronym	Parameter	Reference Section	Typical Influence [Note (1)]	Typical Source [Note (2)]	Remarks
QrLCw	COOLING WATER LOSS	5.14.15	SEC	M/E	
	Cooling Water Flow Rate	4.7.4	PRI	M/E	
	Temperature of Water Entering	4.4.4	PRI	M	
	Temperature of Water Leaving	4.4.4	PRI	M	
	Fuel Rate	4.7.5/4.7.7	PRI	C/M	See Table 4.2-12
QrLAc	AIR PREHEAT COIL LOSS (Energy Supplied from within Boundary)	5.14.16	SEC	M	
	APC Condensate Flow Rate	4.7.4	PRI	M/C	
	APC Condensate Temperature	4.4.4	PRI	M	
	APC Condensate Pressure	4.5.4	PRI	M	
	Feedwater Temperature	4.4.4	PRI	M	
	Feedwater Pressure	4.5.4	SEC	M	
QpBDA	ENTERING DRY AIR CREDIT	5.15.1	PRI	M	
	Entering Air Temperature	4.4.3	PRI	M	See Table 4.2-5
	EXCESS AIR	5.11.4	PRI	M	See Table 4.2-6
	Fuel Analysis	4.12.3	PRI	M	
	UNBURNED CARBON	5.10.4	SEC	M/E	See *QpLUbc* Table 4.2-1
	SULFUR CAPTURE	5.9.5	PRI	M	See Table 4.2-10
QpBWA	MOISTURE IN ENTERING AIR CREDIT	5.15.2	SEC	M/E	
	Items for *QpBDA*		PRI	M	
	Moisture in Air	4.15	PRI	M/E	
	Dry-Bulb Temperature	4.15	PRI	M	
	Wet-Bulb Temperature	4.15	PRI	M	
	or Relative Humidity	4.15	PRI	M	
	Barometric Pressure	4.5.5	SEC	M	
QpBF	SENSIBLE HEAT IN FUEL CREDIT	5.15.3	SEC	M	
	Fuel Analysis	4.12.3	PRI	M	
	Fuel Temperature Entering	4.4	PRI	M/E	
QpBSlf	SULFATION CREDIT	5.14.4	PRI	M	
	SO_2/O_2 in Flue Gas	4.13	PRI	M	See Table 4.2-10
	Fuel Analysis	4.12.3	PRI	M	
	Sorbent Analysis	4.12.3	PRI	M	
	Sorbent Rate	4.7.7	PRI	M	
	Fuel Rate	4.7.5	PRI	C/M	See Table 4.2-12
	% Carbon in Residue	4.12.3	PRI	M	
	% CO_2 in Residue	4.12.3	PRI	M	
QrBX	AUXILIARY EQUIPMENT POWER CREDIT	5.15.5	SEC	M/C/E	
	Steam Driven Equipment				
	Mass Flow of Steam	4.7.4	PRI	M	
	Entering Steam Pressure	4.5.4	PRI	M	
	Entering Steam Temperature	4.4.4	PRI	M	
	Exhaust Pressure	4.5.4	PRI	M	
	Drive Efficiency	NA	PRI	E/M	PTC 19.7
	Electrical Driven Equipment				
	For Large Motors:				
	Watt Hour Reading	NA	PRI	M	IEEE Standard 120
	Drive Efficiency	NA	PRI	E/M	PTC 19.7
	For Small Motors:				
	Volts	NA	SEC	M	
	Amps	NA	SEC	M	
QrBSb	SENSIBLE HEAT IN SORBENT CREDIT	5.15.6	SEC	M	
	Sorbent Rate	4.7.5	PRI	M	
	Sorbent Temperature	4.4.5	PRI	M	

(continued)

Copyright ASME International
Provided by IHS under license with ASME
No reproduction or networking permitted without license from IHS
Not for Resale

TABLE 4.2-1 (CONT'D)
PARAMETERS REQUIRED FOR EFFICIENCY DETERMINATION BY ENERGY BALANCE METHOD

Calculation Acronym	Parameter	Reference Section	Typical Influence [Note (1)]	Typical Source [Note (2)]	Remarks
QrBWAd	ENERGY SUPPLIED BY ADDITIONAL MOISTURE CREDIT	5.15.7	SEC	M/E	
	Mass Flow Rate	4.7.4	PRI	M	
	Entering Temperature	4.4.4	PRI	M	
	Entering Pressure	4.5.4	PRI	M	

NOTES:
(1) Typical Influence: PRI = Primary, SEC = Secondary.
(2) Typical Source: M = Measured, C = Calculated, E = Estimated.

TABLE 4.2-2
PARAMETERS REQUIRED FOR EFFICIENCY DETERMINATION BY INPUT-OUTPUT METHOD

Calculation Acronym	Parameter	Reference Section	Typical Influence [Note (1)]	Typical Source [Note (2)]	Remarks
QrF	HEAT INPUT FROM FUEL	5.5	PRI	M	
	Fuel Rate	4.7.5/4.7.7	PRI	M	
	Heating Value of Fuel	4.12	PRI	M	
	Fuel Analysis	4.12.13	PRI	M	
QrO	OUTPUT	5.4	PRI	C	See Table 4.2-3

NOTES:
(1) Typical Influence: PRI = Primary, SEC = Secondary.
(2) Typical Source: M = Measured, C = Calculated, E = Estimated.

required but have a lesser (secondary) affect on result. In some cases, the general parameter may have a secondary impact on the results, but the items required to determine the parameter have a primary impact on the parameter itself. For example, see "Unburned H_2 in Residue Loss" in Table 4.2-1.

The "Typical Source" column identifies acceptable options for determining the parameter. These options are "measured," "calculated," and "estimated." "Typical" indicates what is usual or common industry practice for this measurement. In many cases, the typical source choice may not be relevant for a particular unit; the test engineer's responsibility is then to choose a method which is consistent with the principles of this Code.

The determination of some parameters such as flue gas constituents can be extensive. Either a table or portion of a table is devoted to these types of parameters. When these items are required to determine other characteristics, the general parameter is noted, and the applicable table referenced. When sorbent is used, parameters related to sorbent are grouped separately starting with "Sorbent Analysis" and separated within the major parameter with a line.

4.3 GENERAL MEASUREMENT REQUIREMENTS

The methods for obtaining the required data determine the quality of the test. There are usually several ways to measure any given parameter. Each of these ways has inherent measurement errors attributable to both the process involved and the measurement system used. The test engineer must take all of this into account when designing the test program.

The method of obtaining the data typically involves the use of a measurement system. This measurement system consists of four parts:

- primary element
- sensing device
- data collection/measurement device
- data storage device

Copyright ASME International
Provided by IHS under license with ASME
No reproduction or networking permitted without license from IHS
Not for Resale

TABLE 4.2-3
PARAMETERS REQUIRED FOR CAPACITY DETERMINATION

Calculation Acronym	Parameter	Reference Section	Typical Influence [Note (1)]	Typical Source [Note (2)]	Remarks
QrO	OUTPUT	5.4	PRI	C	
	Saturated Steam Generator	5.4.1.1			
	Saturated Steam Flow	4.7.4	PRI	M	
	Feedwater Flow	4.7.4	PRI	M	
	Blowdown Flow	5.4.5	PRI	M/E	
	Extraction Flow	4.7.4	PRI	M	
	Saturated Steam Pressure	4.4.4	PRI	M	
	Feedwater Temperature	4.4.4	PRI	M	
	Feedwater Pressure	4.5.4	SEC	M	
	Superheated Steam Generator	5.4.1.2			
	Main Steam Flow	4.7.4	PRI	M	
	Feedwater Flow	4.7.4	PRI	M	
	Blowdown Flow	4.7.4	SEC	M/E	
	Extraction Flow	4.7.4	PRI	M	
	Desuperheating Spray Flow	4.7.4	PRI	C/M	
	Main Steam Temperature	4.4.4	PRI	M	
	Main Steam Pressure	4.5.4	PRI	M	
	Feedwater Temperature	4.4.4	PRI	M	
	Feedwater Pressure	4.5.4	SEC	M	
	Desuperheating Spray Water Temperature	4.4.4	PRI	M	
	Desuperheating Spray Water Pressure	4.5.4	SEC	M	
	Reheat Steam Generator	5.4.2			
	Reheat Steam Flow	5.4.2.1	PRI	C/M	See PTC 6
	Reheat Desuperheating Spray Water Flow	4.7.4	PRI	M	
	Feedwater Heater Extraction Flow	5.4.2.1	PRI	C/M	
	Feedwater Heater Extraction Temperature	4.4.4	PRI	M	
	Feedwater Heater Extraction Pressure	4.5.4	PRI	M	
	Feedwater Heater Entering Water Temperature	4.4.4	PRI	M	
	Feedwater Heater Leaving Water Temperature	4.4.4	PRI	M	
	Feedwater Heater Water Pressure	4.5.4	SEC	M	
	Feedwater Water Drain Temperature	4.4.4	PRI	M	
	Turbine Leakage	NA	SEC	E	
	Steam Extraction Flow (Other)	4.7.4	PRI	M	
	Reheat Out Steam Temperature	4.4.4	PRI	M	
	Reheat Out Steam Pressure	4.5.4	PRI	M	
	Reheat In Steam Temperature	4.4.4	PRI	M	
	Reheat In Steam Pressure	4.5.4	PRI	M	
	Reheat Desuperheating Spray Water Temperature	4.4.4	PRI	M	
	Reheat Desuperheating Spray Water Pressure	4.5.4	SEC	M	
	Auxiliary Steam	5.4.3			
	Auxiliary Steam Flow	4.7.4	PRI	M/E	
	Auxiliary Steam Temperature	4.4.4	PRI	M	
	Auxiliary Steam Pressure	4.5.4	PRI	M	
	Feedwater Temperature	4.4.4	PRI	M	
	Feedwater Pressure	4.5.4	SEC	M	

NOTES:
(1) Typical Influence: PRI = Primary, SEC = Secondary.
(2) Typical Source: M = Measured, C = Calculated, E = Estimated.

Copyright ASME International
Provided by IHS under license with ASME
No reproduction or networking permitted without license from IHS
Not for Resale

TABLE 4.2-4
PARAMETERS REQUIRED FOR STEAM TEMPERATURE/CONTROL RANGE DETERMINATION

Calculation Acronym	Parameter	Reference Section	Typical Influence [Note (1)]	Typical Source [Note (2)]	Remarks
	Superheated Steam Generators	5.4.1.2			The primary
	Main Steam Flow	4.7.4	PRI	M	measurements are listed
	Blowdown Flow	4.7.4	PRI	M/E	here. All items needed
	Extraction Flow	4.7.4	PRI	M	for output are required.
	Main Steam Temperature	4.4.4	PRI	M	
	Main Steam Pressure	4.5.4	PRI	M	
	Drum Pressure (if applicable)	4.5.4	PRI	M	
	Drum Level				
	Feedwater Temperature	4.4.4	PRI	M	
	Feedwater Pressure	4.5.4	SEC	M	
	Desuperheated Spray Water Flow	4.7.4	PRI	M	
	Desuperheated Spray Water Temperature	4.4.4	PRI	M	
	Desuperheated Spray Water Pressure	4.5.4	SEC	M	
	Other Items Required to Determine Output	5.4	SEC	M/C/E	
	Reheat Steam Generators	5.4.2			See Table 4.2-3
	Reheat Steam Flow	5.4.2.1	PRI	C/M	
	Reheat Out Steam Temperature	4.4.4	PRI	M	
	Reheat Out Steam Pressure	4.5.4	PRI	M	
	Reheat In Steam Temperature	4.4.4	PRI	M	
	Reheat Out Steam Pressure	4.5.4	PRI	M	
	Reheat Desuperheating Spray Water Flow	4.7.4	PRI	M	
	Reheat Desuperheating Spray Water Temperature	4.4.4	PRI	M	
	Reheat Desuperheating Spray Water Pressure	4.5.4	SEC	M	
	Related Parameters				
	Excess Air	5.11.4		M	
	Gas Proportioning Damper			M	
	Flue Gas Recirculation Flow			M	
	Blowdown	5.4.4			

NOTES:
(1) Typical Influence: PRI = Primary, SEC = Secondary.
(2) Typical Source: M = Measured, C = Calculated, E = Estimated.

The primary element provides access or causes an effect which the sensing device measures, typically by converting it to a proportional electrical signal. This electrical signal is then either converted to a digital value and stored electronically or sent to a chart recorder or analog meter.

4.3.1 Type of Equipment/Installation. In general, measuring equipment should be selected to minimize test uncertainty. In particular, critical parameters should be measured with instruments that have sufficient accuracy to ensure that target uncertainties will be achieved. Typical station recording instruments are designed for reliability and ease of use and maintenance, rather than for accuracy. Therefore, measurements made by station recording instruments may increase test uncertainty beyond agreed-upon limits. All instruments must be checked to verify that they are the specified type, properly installed, working as designed, and functioning over the range of input expected.

4.3.2 Calibration. The parties to the test shall agree on which instruments will be calibrated for the test. This Code requires that, as a minimum, relevant components of all instrumentation loops have been initially aligned (the zero offsets or spans have been adjusted to their respective specifications). Calibrations prior to and following the tests shall be against standards whose calibrations are traceable to the National Institute of Standards and Technology (NIST) or other recognized

Copyright ASME International
Provided by IHS under license with ASME
No reproduction or networking permitted without license from IHS
Not for Resale

TABLE 4.2-5
PARAMETERS REQUIRED FOR EXIT FLUE GAS AND AIR ENTERING TEMPERATURE DETERMINATIONS

Calculation Acronym	Parameter	Reference Section	Typical Influence [Note (1)]	Typical Source [Note (2)]	Remarks
	No Air Heater				
	Flue Gas Temperature Leaving Steam Generator	4.4.3	PRI	M	
	Air Temperature Entering Steam Generator	4.4.3	PRI	M	
	Single Bisector Type Air Heater				
	O_2 Entering Air Heater	4.10	PRI	M	
	O_2 Leaving air Heater	4.10	PRI	M	
	Flue Gas Temperature Entering Air Heater	4.4.3	PRI	M	
	Flue Gas Temperature Leaving Air Heater	4.4.3	PRI	M	
	Air Temperature Entering Air Heater	4.4.3	PRI	M	Flue gas temperature entering is ony required for correction to reference.
	Primary Secondary Air Heaters				
	Items Above for Bisector Air Heater		PRI		
	Plus:				
	Air Temperature Leaving Each Air Heater	4.4.3	PRI	M	
	Primary Air Flow Leaving Air Heater	4.7.3	PRI	C/M	
	Tempering Air Flow	4.7.3	SEC	C	
	Tempering Air Temperature	4.4.3	PRI	M	
	Mixed Air Flow	4.7.3	PRI	C/M	
	Mixed Air Temperature	4.4.3	PRI	M	
	Items Required for Efficiency		PRI		See Table 4.2-1
	Items Required for Output		PRI		See Table 4.2-3
	Trisector Type Air Heaters				
	Items Above for Single Air Heater		PRI		
	Secondary Air Temperature Entering Air Heater	4.4.3	PRI	M	
	Secondary Air Temperature Leaving Air Heater	4.4.3	PRI	M	
	Primary Air Temperature Entering Air Heater	4.4.3	PRI	M	
	Primary Air Temperature Leaving Air Heater	4.4.3	PRI	M	
	Primary Air Flow Leaving Air Heater	4.7.3	PRI	C/M	
	Tempering Air Flow	4.7.3	PRI	M	
	Tempering Air Temperature	4.4.3	PRI	M	
	Mixed Air Flow	4.7.3	PRI	M	
	Mixed Air Temperature	4.4.3	PRI	M	
	Items Required for Efficiency		PRI		See Table 4.2-1
	Items Required for Output		PRI		See Table 4.2-3

NOTES:
(1) Typical Influence: PRI = Primary, SEC = Secondary.
(2) Typical Source: M = Measured, C = Calculated, E = Estimated.

international standard. All measurements should be corrected for any calibrations before use in the performance calculations; otherwise, the bias estimate must be increased to the reference accuracy plus other bias influences described below. Reference accuracy is the bias a user may expect to achieve in the absence of a calibration after the instrument is initially adjusted in accordance with the manufacturer's specification. This bias is reduced when adjustments are made to an instrument to align it to a reference standard. The bias then becomes the accuracy of the reference standard used plus other bias influences. These influences may include environmental influences on the instrument as well as bias introduced due to nonuniformity of measured medium.

Certain instrumentation should be calibrated immediately prior to and immediately following the testing period to determine the amount of drift. If the pretest and post-test calibrations differ, the amount of drift shall be determined and one half added to the bias estimate for the instrument. Drift is assumed to be linear with time. Therefore, the average of the pretest

Copyright ASME International
Provided by IHS under license with ASME
No reproduction or networking permitted without license from IHS
Not for Resale

TABLE 4.2-6
PARAMETERS REQUIRED FOR EXCESS AIR DETERMINATION

Calculation Acronym	Parameter	Reference Section	Typical Influence [Note (1)]	Typical Source [Note (2)]	Remarks
XpA	EXCESS AIR	5.11.4		M	
	Fuel Analysis	4.12.3	PRI	M	
MpUbc	UNBURNED CARBON	5.10.3	PRI	C/E	
	% Carbon in Residue	4.12.3	PRI	M	
	Residue Split	4.7.8	PRI	M/E	
	% O_2 in Flue Gas	4.13.4	PRI	M	
	O_2 WET BASIS				
MFrWA	MOISTURE IN AIR	5.11.2	PRI	C/E	
	Dry-Bulb Temperature	4.15	PRI	M	
	Wet-Bulb Temperature	4.15	PRI	M	
	Or Relative Humidity	4.15	PRI	M	
	Barometric Pressure	4.5.5	SEC	M	
	Additional Moisture	4.7.4	PRI	M	
MoFrCaS	Sorbent Analysis	4.12.3	PRI	M	
	Ca/S MOLAR RATIO	5.9.6	PRI	C/E	
	Sorbent Rate	4.7.7	PRI	M	
	Fuel Rate	4.7.5/4.7.7	PRI	C/M	See Table 4.2-12
MFrClhk	CALCINATION	5.10.8	PRI	C/E	
	% CO_2 in Residue	4.13.4	PRI	M	
MFrSc	SULFUR CAPTURE	5.9.5	PRI	C/E	
	SO_2/O_2 in Flue Gas	4.13.4	PRI	M	See Table 4.2-10

NOTES:
(1) Typical Influence: PRI = Primary, SEC = Secondary.
(2) Typical Source: M = Measured, C = Calculated, E = Estimated.

and post-test calibrations shall be used for the calibration value.

In general, the best methodology for calibrating the test instrumentation is to calibrate the entire system. This is accomplished by introducing a known input to a sensing device and comparing the result on the recording device to the known value. An example of this is the introduction of a known pressure to a transmitter mounted at its measurement location and connected to the data acquisition, measurement, and recording system. Using this approach, effects of the installation such as a high temperature environment or wiring connections are thus included in the calibration experiment. Any calibration should be performed at a minimum of three different points bracketing the highest and lowest value in the range expected to be measured during the test.

4.3.2.1 Temperature. Temperature sensing devices can be calibrated when it is desired to reduce the uncertainty of the parameter. The level of the standard (interlaboratory, transfer, etc.) used in the calibration sets the reference accuracy. The temperature sensing device should be calibrated against a standard which has a calibration traceable to the NIST or other internationally recognized standard. The sensing element should be compared to at least four different temperatures. The temperatures selected for calibration should span the range of the anticipated values expected during the test. Thermocouples must be heat soaked prior to calibration to ensure that shifts in output do not occur after calibration.

4.3.2.2 Pressure or Differential Pressure. The sensing device should be calibrated with an NIST traceable pressure standard at five different pressures. The pressures should be recorded at atmospheric (zero), 25% full scale, 50% full scale, 75% full scale, and full scale. The pressure should be recorded at each point while pressure is increased and again while pressure is decreased and the average should be used. The difference should be considered in the bias estimate.

4.3.2.3 Flue Gas Analysis. Analyzers used to measure oxygen, carbon monoxide, oxides of nitrogen, and total hydrocarbons shall be calibrated immediately prior

Copyright ASME International
Provided by IHS under license with ASME
No reproduction or networking permitted without license from IHS
Not for Resale

TABLE 4.2-7
PARAMETERS REQUIRED FOR WATER/STEAM PRESSURE DROP DETERMINATIONS

Calculation Acronym	Parameter	Reference Section	Typical Influence [Note (1)]	Typical Source [Note (2)]	Remarks
	SUPERHEATER PRESSURE DROP	5.17		M/C	
	Superheater Outlet Pressure	4.5.4	PRI	M	
	Superheater Inlet (Drum) Pressure	4.5.4	PRI	M	
	Main Steam Flow	4.7.4	PRI	M	
	Feedwater Flow	4.7.4	PRI	M	
	Blowdown Flow	4.7.4	SEC	M/E	
	Exraction Flow	4.7.4	PRI	M	
	Superheater Spray Flow	4.7.4	PRI	C/M	
	Superheater Outlet Steam Temperature	4.4.4	SEC	M	
	Superheater Inlet Steam Temperature	4.4.4	SEC	M	Supercritical Units
	REHEATER PRESSURE DROP	5.17		M/C	
	Reheater Inlet Steam Pressure	4.5.4	PRI	M	
	Reheater Outlet Steam Pressure	4.5.4	PRI	M	
	Reheater Steam Flow	5.4.2.1	PRI	C/M	See Table 4.2-3
	Feedwater Heater Extraction Flow	5.4.2.1	PRI	C/M	
	Turbine Leakage	NA	SEC	E	
	Steam Extraction Flow	4.7.4	PRI	M	
	Reheater Spray Water Flow	4.7.4	PRI	M	
	Reheater Inlet Steam Temperature	4.4.4	SEC	M	
	Reheater Outlet Steam Temperature	4.4.4	SEC	M	
	ECONOMIZER PRESSURE DROP	5.17		M/C	
	Economizer Water Inlet Pressure	4.5.4	PRI	M	
	Economizer Water Outlet (Drum) Pressure	4.5.4	PRI	M	
	Feedwater Flow	4.7.4	PRI	M	
	Superheated Spray Water Flow	4.7.4	PRI	M/C	
	Economizer Water Inlet Temperature	4.4.4	SEC	M	
	Economizer Water Outlet Temperature	4.4.4	SEC	M	

NOTES:
(1) Typical Influence: PRI = Primary, SEC = Secondary.
(2) Typical Source: M = Measured, C = Calculated, E = Estimated.

to a test, and calibration shall be checked for drift immediately following a test. These calibrations are performed using certified calibration gases for zero, full span, and midpoint. Calibration gases must be EPA Protocol I quality gases or gases which have been compared to EPA Protocol I gases on a calibrated analyzer. Additionally, no calibration gas shall be used when the pressure in the cylinder is lower than 100 psi to ensure that atmospheric air does not contaminate it. The calibration gas used for full span standard must exceed the largest expected value by 10%. The span gas used for the post-test calibration check must exceed the largest measured value by 10%. If the analyzer is calibrated on one range and the measurement during the test is performed on another, a post-test calibration check shall be performed on the second range. Potential biases introduced by the sampling system should be verified by the introduction of calibration gases into the sampling system at the probe after the instrumentation has been properly calibrated. Any deviation from what the instruments read when the gas is introduced directly versus when fed through the sampling system indicates a sampling system bias. If significant bias is observed, the sampling system design should be reviewed to reduce or eliminate this bias. Certain materials may absorb gases until saturated and then release them

Copyright ASME International
Provided by IHS under license with ASME
No reproduction or networking permitted without license from IHS
Not for Resale

TABLE 4.2-8
PARAMETERS REQUIRED FOR AIR/FLUE GAS PRESSURE DROP DETERMINATIONS

Calculation Acronym	Parameter [Note (1)]	Reference Section	Typical Influence [Note (2)]	Typical Source [Note (3)]	Remarks
	AIR SIDE RESISTANCE	5.17.3		M/C	
	Forced Draft Fan Discharge Pressure	4.5.3	PRI	M	
	Air Heater Air Inlet Pressure	4.5.3	PRI	M	
	Air Heater Air Outlet Pressure	4.5.3	PRI	M	
	Windbox Pressure	4.5.3	PRI	M	
	Furnace Pressure	4.5.3	PRI	M	
	Air Flow	5.11.6	PRI [Note (4)]	C	See Table 4.2-12
	Main Steam Flow	4.7.4	SEC	M	
	Air Temperature	4.4.3	SEC	M	
	GAS SIDE RESISTANCE	5.17.3		M/C	
	Furnace Pressure	4.5.3	PRI	M	
	Superheater Inlet Pressure	4.5.3	PRI	M	
	Superheater Outlet Pressure	4.5.3	PRI	M	
	Reheater Inlet Pressure	4.5.3	PRI	M	
	Reheater Outlet Pressure	4.5.3	PRI	M	
	Generating Bank Inlet Pressure	4.5.3	PRI	M	
	Generating Bank Outlet Pressure	4.5.3	PRI	M	
	Economizer Inlet Pressure	4.5.3	PRI	M	
	Economizer Outlet Pressure	4.5.3	PRI	M	
	Air Quality Control Equipment Inlet Pressure	4.5.3	PRI	M	
	Air Quality Control Equipment Outlet Pressure	4.5.3	PRI	M	
	Air Heater Gas Inlet Pressure	4.5.3	PRI	M	
	Air Heater Gas Outlet Pressure	4.5.3	PRI	M	
	Flue Gas Flow Rate	5.12.9	PRI [Note (4)]	C	See Table 4.2-12
	Main Steam Flow	4.7.4	SEC	M	
	Flue Gas Temperature	4.4.3	SEC	M	

NOTES:
(1) Typical intermediate pressures are shown for evaluation of system resistance.
(2) Typical Influence: PRI = Primary, SEC = Secondary.
(3) Typical Source: M = Measured, C = Calculated, E = Estimated.
(4) Air gas side flow rates are required for corrections to reference conditions.

when concentrations are lower. This hideout phenomenon can be resolved by replacing the offending materials with more inert material.

4.3.3 Frequency of Measurements. Because of fuel variability, control system tuning, and other factors, variations in operational parameters are inevitable. To minimize the uncertainty, more measurements are taken during the test to reduce precision errors in the data collected. The frequency of data collection has a direct correlation to the test uncertainty. Quantity measurements, e.g., fuel measured by volumetric or weigh tanks, are made at a frequency dictated by the collection device. Other data collection should be at a maximum interval of 15 minutes and a preferred interval of 2 minutes or less. If fluctuations are noted on any important parameters during the time data are being collected at greater than 2 minute intervals, the time interval between data collections should be decreased to no longer than 2 minutes. The resulting increase in the quantity of data provides a greater statistical base from which to determine performance, and reduces the precision component of uncertainty.

The use of automated data collection devices is preferred. In most modern data acquisition devices, A/D accuracy is no longer an issue; most have at least 14 bit accuracy. The major issue involves Distributed Control Systems (DCS) which use exception-based reporting. This method utilizes a deadband approach with which no change in the value is reported unless it exceeds a given percentage. This type of system is

Copyright ASME International
Provided by IHS under license with ASME
No reproduction or networking permitted without license from IHS
Not for Resale

TABLE 4.2-9
PARAMETERS REQUIRED FOR AIR INFILTRATION DETERMINATION

Calculation Acronym	Parameter	Reference Section	Typical Influence [Note (1)]	Typical Source [Note (2)]	Remarks
	INFILTRATION BASED ON MEASURED O_2	5.17.6			
	EXCESS AIR ENTERING COMPONENT	5.11.4	PRI	C	See Table 4.2-6
	Flue Gas O_2 Entering Component	4.13.4	PRI	M	
	EXCESS AIR LEAVING COMPONENT	5.11.4	PRI	C	See Table 4.2-6
	Flue Gas O_2 Leaving Component	4.13.4	PRI	M	
	INFILTRATION BY ENERGY BALANCE	5.17.6		C	
	FLUE GAS RATE ENTERING AIR HEATER	5.12.9	PRI	C	See Table 4.2-12
	Flue Gas O_2 Entering Air Heater	4.13.4	PRI	M	
	Fuel Analysis	4.12.3	SEC	M	
	Flue Gas Temperature Entering Air Heater	4.4.3	PRI	M	
	Flue Gas Temperature Leaving Air Heater	4.4.3	PRI	M	
	Air Temperature Entering Air Heater	4.4.3	PRI	M	
	Air Temperature Leaving Air Heater	4.4.3	PRI	M	
	Moisture in Air	4.15	SEC	M/E	

NOTES:
(1) Typical Influence: PRI = Primary, SEC = Secondary.
(2) Typical Source: M = Measured, C = Calculated, E = Estimated.

unacceptable unless the deadband can be set to approximately zero for test measurements.

4.3.4 Weighted Parameters. The flue gas temperature is needed to determine the sensible heat in a flue gas stream. Because the temperature varies across the duct cross section, the proper temperature to use is an integrated average (see Subsection 7.2.3). Because the sensible heat is the objective, the variation in mass flow or stratification should be taken into account. Ideally, this is done by simultaneously measuring the flue gas velocity, oxygen, pressure, and temperature at all points in the grid. Weighting factors based on the relative mass flow in the local area can be applied to the measured temperatures. Weighting factors based on velocity are also applied to flue gas oxygen concentration measurements.

Although the theoretically correct weighting is by mass flow (weighting factors are the product of density and velocity) for temperature and by volume flow (weighting factor is velocity) for oxygen, this Code recommends that only velocity weighting be used in either case so that the procedure is as simple and as practical as possible.

In some cases, flow weighting can decrease the error in the results of a performance test; in other cases, flow weighting can increase the error. This latter case can occur when velocity is not determined simultaneously with temperature and oxygen data, when velocity data are inaccurate, or when the time required to obtain point-by-point data results in fewer complete sets of data being obtained. Therefore, this Code only recommends flow weighting when the bias limit due to flow weighting is significantly large.

4.3.4.1 Applicability of Flow Weighting. The existence of stratification of the flue gas and its effect on uncertainty can be determined by a temperature or by a preliminary traverse.

The temperature traverse is useful when an existing temperature grid is available to eliminate concerns of stratification. Using the temperature data from the grid, an estimate for the flow weighted temperature is made using the ratio of *absolute* temperatures to approximate the velocity weighting factors:

$$\frac{V_1}{\overline{V}} \cong \frac{T_1 + 459.7}{\overline{T} + 459.7}$$

If the difference between the weighted and unweighted temperatures (ΔT) calculated using this approximation exceeds 2°F (i.e., if the bias estimate exceeds 4°F, refer to Subsection 7.5.3.3), the parties to the test may wish to consider a preliminary velocity traverse to aid in deciding whether to employ flow weighting.

A preliminary velocity traverse can also be performed to determine if stratification will result in high bias limit and if flow weighting should be considered. First,

Copyright ASME International
Provided by IHS under license with ASME
No reproduction or networking permitted without license from IHS
Not for Resale

TABLE 4.2-10
PARAMETERS REQUIRED FOR SULFUR CAPTURE/RETENTION DETERMINATION

Calculation Acronym	Parameter	Reference Section	Typical Influence [Note (1)]	Typical Source [Note (2)]	Remarks
MFrSc	SULFUR CAPTURE RETENTION	5.9.5			
	SO_2 in Flue Gas	4.13.4	PRI	M	
	O_2 in Flue (Same Location as SO_2)	4.13.4	PRI	M	
MFrWA	GAS ANALYSIS WET BASIS MOISTURE IN AIR	5.11.2	PRI	C/E	
	Dry-Bulb Temperature	4.15	PRI	M	
	Wet-Bulb Temperature	4.15	PRI	M	
	Or Relative Humidity	4.15	PRI	M	
	Additional Moisture	4.7.4	PRI	M/E	
	Fuel Analysis	4.12.3	PRI	M/E	
MpUbc	UNBURNED CARBON	5.10.3	PRI	C/E	
	% Carbon in Residue	4.12.3	PRI	M	
	Residue Split	4.7.8	PRI	M/E	
	Sorbent Analysis	4.12.3	PRI	M	
MoFrCaS	Ca/S MOLAR RATIO	5.9.6	PRI	C/E	
	Sorbent Rate	4.7.7	PRI	M	
	Fuel Rate	4.7.5	PRI	C	
MFrClhk	CALCINATION	5.10.8	PRI	C/E	
	% CO_2 in Residue	4.12.3	PRI	M	

NOTES:
(1) Typical Influence: PRI = Primary, SEC = Secondary.
(2) Typical Source: M = Measured, C = Calculated, E = Estimated.

TABLE 4.2-11
PARAMETERS REQUIRED FOR CALCIUM TO SULFUR MOLAR RATIO DETERMINATION

Calculation Acronym	Parameter	Reference Section	Typical Influence [Note (1)]	Typical Source [Note (2)]	Remarks
MoFrCaS	Ca/S MOLAR RATIO	5.9.6		C	
	% CO_2 in Residue	4.12.3	PRI	M	
	% Carbon in Residue	4.12.3	PRI	M	
	Residue Split	4.7.8	PRI	F/M	
	Fuel Analysis	4.7.5/4.7.7	PRI	M	
	Sorbent Analysis	4.12.3	PRI	M	
	Sorbent Rate	4.7.7	PRI	M	
	Fuel Rate	4.7.5	PRI	C	
	SULFUR CAPTURE	5.9.5	SEC	C/E	See Table 4.2-10
	SO_2/O_2 in Flue Gas	4.13.4	PRI	M	

NOTES:
(1) Typical Influence: PRI = Primary, SEC = Secondary.
(2) Typical Source: M = Measured, C = Calculated, E = Estimated.

Copyright ASME International
Provided by IHS under license with ASME
No reproduction or networking permitted without license from IHS Not for Resale

TABLE 4.2-12
PARAMETERS REQUIRED FOR FUEL, AIR, AND FLUE GAS FLOW RATE DETERMINATIONS

Calculation Acronym	Parameter	Reference Section	Typical Influence [Note (1)]	Typical Source [Note (2)]	Remarks
QrI	INPUT FROM FUEL	5.5			
	Fuel Rate (measured)	4.7.7	PRI	M	
	Fuel Rate (calculated)	5.7.7	PRI	C	
QrO	Output	5.4	PRI	M	See Table 4.2-3
EF	Fuel Efficiency	5.7.1	PRI	C	See Table 4.2-1
	Fuel Analysis	4.12.3	PRI	M	
MgA	WET AIR FLOW RATE	5.11.6		C	
MrA	EXCESS AIR	5.11.4	PRI	C	See Table 4.2-6
	MOISTURE IN AIR	5.11.2	PRI	C	See Table 4.2-6
MqFg	WET GAS FLOW RATE	5.12.9		C	
MrFg	Fuel Analysis	4.12.3	PRI	M	
	UNBURNED CARBON	5.10.3	PRI	M/E	
	% Carbon in Residue	4.12.3.5	PRI	M	
	Residue Split	4.7.8	PRI	M/E	
	EXCESS AIR	5.11.4	PRI	M/E	See Table 4.2-6
	MOISTURE IN AIR	5.11.2	PRI	M/E	
	Additional Moisture	4.7.4	PRI	M/E	
	Sorbent Analysis	4.12.3	PRI	M	
	Ca/S MOLAR RATIO	5.9.6	PRI	M/E	
	CALCINATION	5.10.8	PRI	M/E	
	SULFUR CAPTURE	5.9.5	PRI	M/E	

NOTES:
(1) Typical Influence: PRI = Primary, SEC = Secondary.
(2) Typical Source: M = Measured, C = Calculated, E = Estimated.

the differences between flow-weighted averages and non-weighted averages are calculated:

$$\Delta T = \text{ABS}(\overline{T}_{FW} - \overline{T}_{UW})$$

$$\Delta O_2 = \text{ABS}(\overline{O}_{2,FW} - \overline{O}_{2,UW})$$

where ABS is the absolute value function. (These differences estimate the bias due to not flow weighting.) Then:

- If ΔT is less than 3°F and/or ΔO_2 is less than 0.2%, flow weighting should not be used.
- If ΔT is greater than 3°F or ΔO_2 is greater than 0.2%, three or more complete traverses are required to validate the velocity distribution, else flow weighting may not be used. If the velocity factors have been verified, then the parties to the test shall decide if flow weighting is to be used.

4.3.4.2 Flow Weighting Method. If it is determined that flow weighting is applicable and the parties elect to flow weight, flow weighting shall be applied as follows.

Prior to any weighting, the "velocity" raw data (typically velocity pressure and pitch and yaw angles) should be reduced to determine velocity normal to the traverse plane. The (space and time) average velocity should be calculated so that the weighting factors are $V_i/\overline{V}$.

Two approaches may be considered for flow weighting using velocity factors. The first is to use the preliminary velocity weighting factors with the test measurements for temperature and (less frequently) oxygen, as discussed in the previous Subsection. The second is to traverse each grid point during the test to measure temperature, velocity, and oxygen. (Sometimes, only temperature and velocity are measured, with oxygen measured as a composite sample and therefore not flow weighted.) Each method has the potential for introducing error in the averages calculated from the data. In addition to the error in velocity determination, the first method introduces error by assuming that the test-time velocities are identical to those measured in

Copyright ASME International
Provided by IHS under license with ASME
No reproduction or networking permitted without license from IHS Not for Resale

the preliminary traverse(s). The error associated with the second method is more subtle. The time required to traverse each point is usually sufficiently large that only a few repeated measurements at each point (that is, only a few repeated traverses) are made, thus increasing the precision error. An additional error may be introduced by the variation of the test conditions over time so that values measured at a point near the end of a traverse do not correspond to those measured at another point near the beginning of the traverse.

The following rules should be used when performing simultaneous velocity, temperature, and oxygen traverses during a test run:

- There should be no fewer than three complete traverses per test run.
- Flow weighting of O_2 should be considered only if ΔO_2 is greater than 0.2% and three or more complete traverses have been performed during the test run.
- The values of ΔT and ΔO_2 must be repeatable between the test runs. If the value for either ΔT or ΔO_2 for any traverse differs by more than 33% from the average value for all traverses, the most likely cause is bad velocity data and data from that traverse must be rejected.

During each test run, a velocity probe should be located at a fixed point where the velocity is approximately equal to the average value, the temperature is approximately equal to the average value, and the oxygen content is approximately equal to the average value. The velocity, temperature, and oxygen at this point should be recorded with the same frequency as the traverse points (that is, the data should be recorded each time the data at any traverse point is recorded). The resulting large number of data for the single point can be used to estimate the precision error of the weighted average, as described in Subsection 7.4.1.3 and Subsection 5.2.4.2.

4.3.5 Determination of Bias Due to Measurements. Estimating the bias is a key step in designing the test and selecting instrumentation. The total bias associated with a particular measurement is the result of several biases in the measurement system. Section 7.5 describes the process of combining the biases. For each parameter in the test program, all possible sources of measurement system error associated with that parameter should be determined. All of the components of the system should be examined to estimate their bias.

Outside factors which influence the measurement should be considered. Factors such as an air leak into a flue gas analyzer should be considered and included as a one-sided bias, since a leak can only dilute the sample. Obviously, all leaks should be found and repaired prior to the beginning of the test, although it is recognized that a small leak could occur during the test, or a very small leak may not be found prior to testing. All of these biases must then be combined into a single value for the parameter.

Since data collection and storage are often the same for many parameters, the biases associated with these portions of the measurement system warrant discussion next. Following the discussion of the data collection system, each of the different types of process measurements will be discussed along with the biases associated with their primary elements and sensing devices. Other sources which may be referenced for typical values of bias include other ASME publications such as MFC-3M, Measurement of Fluid Flow in Pipes Using Orifice, Nozzle, and Venturi; PTC 19.2, Instruments and Apparatus: Part 2 Pressure Measurement; PTC 19.3, Temperature Measurement; ISO 5167, Flow Measurement; appropriate ASTM standards; and instrument manufacturer specifications.

Estimating the bias in a measurement involves the evaluation of all components of a measurement system, such as those listed in Tables 4.3-1 through 4.3-5. These biases, however, may not be representative of any specific measurement situation and tend to be conservative. It would be misleading for this Code to mandate specific values for bias and values must be agreed upon by parties to the test.

Many instrument specifications provide a reference accuracy. This accuracy is only a part of the potential bias of that instrument. Other factors such as drift, nonuniformity of flowing fluid, vibration, and differences between assumed and actual water leg density can influence the measurement. Often the reference accuracy of an instrument can be improved through calibration. After a calibration, the accuracy of the reference standard and the repeatability of the instrument can be combined to determine the new accuracy of the instrument.

The assignment of the appropriate bias requires the full knowledge of the test measurement system, the process being tested, and all other factors which may influence the bias of the measurement. The test engineer is in the best position to evaluate these factors, and can use Tables 4.3-1 through 4.3-5 as a tool to assist in assigning values for measurement biases.

When parameters are estimated rather than measured, the values for estimates and for bias limits shall be agreed upon by the parties to the test. The test engineer can usually arrive at reasonable values by considering that the probability is approximately 19:1 (95% confidence level) that the upper and lower limits will not

Copyright ASME International
Provided by IHS under license with ASME
No reproduction or networking permitted without license from IHS
Not for Resale

TABLE 4.3-1
POTENTIAL INSTRUMENTATION BIAS LIMITS

Instrument	Bias Limits [Note (1)]
Data Acquisition	Note (2)
Digital Data Logger	Negligible
Plant Control Computer	± 0.1%
Hand-Held Temperature Indicator	± 0.25%
Hand-Held Potentiometer (including reference junction)	± 0.25%
Temperature	Note (3)
Thermocouple	
NIST Traceable Calibration	Note (4)
Premium Grade Type E	
32–600°F	± 2°F
600–1,600°F	± 0.4%
Premium Grade Type K	
32–530°F	± 2°F
530–2,300°F	± 0.4%
Standard Grade Type E	
32–600°F	± 3°F
600–1,600°F	± 0.5%
Standard Grade Type K	
32–530°F	± 4°F
530–2,300°F	± 0.8%
Resistance Temperature Device (RTD)	
NIST Traceable Calibration Standard	Note (4)
32°F	± 0.3%
200°F	± 0.8%
400°F	± 1.3%
570°F	± 1.8%
750°F	± 2.3%
930°F	± 2.8%
1,100°F	± 3.3%
1,300°F	± 3.8%
Temperature Gauge	± 2% of span
Mercury-in-Glass Thermometer	± 0.5 gradation
Pressure	Note (5)
Gauge	
Test	± 0.25% of span
Standard	± 1% of span
Manometer	± 0.5 gradation
Transducer and Transmitter	
High Accuracy	± 0.1% of span
Standard	± 0.25% of span
Aneroid Barometer	± 0.05 in. Hg
Weather Station	Note (6)

(continued)

Copyright ASME International
Provided by IHS under license with ASME
No reproduction or networking permitted without license from IHS
Not for Resale

TABLE 4.3-1 (CONT'D)
POTENTIAL INSTRUMENTATION BIAS LIMITS

Instrument	Bias Limits [Note (1)]
Velocity	
Standard Pitot Tube	
Calibrated	± 5% [Note (7)]
Uncalibrated	± 8% [Note (7)]
S-Type Pitot Tube	
Calibrated	± 5% [Note (7)]
Uncalibrated	± 8% [Note (7)]
3-Hole Probe	
Calibrated	± 2% [Note (7)]
Uncalibrated	± 4% [Note (7)]
Hot Wire Anemometer	± 10%
Turbometer	± 2%
Flow (Air and Gas)	
Multipoint Pitot Tube (Within Range)	
Calibrated and Inspected (Directional Velocity Probe)	± 5%
Calibrated with S-Type or Standard	± 10%
Uncalibrated and Inspected	± 8%
Uncalibrated and Uninspected	± 20%
Airfoil	
Calibrated	± 5%
Uncalibrated	± 20%
Flows (Steam and Water)	Note (8)
Flow Nozzle	
PTC 6 (With Flow Straighteners)	
Calibrated and Inspected	± 0.25%
Uncalibrated and Inspected	± 2.5%
Uncalibrated and Uninspected	± 5%
Pipe Taps	
Calibrated and Inspected	± 0.50% steam ± 0.40% water
Uncalibrated and Inspected	± 2.2% steam ± 2.1% water
Uncalibrated and Uninspected	New plant: see above Existing plant: variable
Venturi	
Throat Taps	
Calibrated and Inspected	± 0.50% steam ± 0.40% water
Uncalibrated and Inspected	± 1.2% steam ± 1.1% water
Uncalibrated and Uninspected	New plant: see above Existing plant: variable
Orifice	
Calibrated and Inspected	± 0.50% steam ± 0.40% water
Uncalibrated and Inspected	± 0.75% steam ± 0.70% water
Uncalibrated and Uninspected	New plant: see above Existing plant: variable
Weir	± 5%
Blowdown Valve	± 15%

(continued)

Copyright ASME International
Provided by IHS under license with ASME
No reproduction or networking permitted without license from IHS
Not for Resale

TABLE 4.3-1 (CONT'D)
POTENTIAL INSTRUMENTATION BIAS LIMITS

Instrument	Bias Limits [Note (1)]
Liquid Fuel Flow (Calibrated)	
Flow Meter	
Positive Displacement Meter	± 0.5%
Turbine Meter	± 0.5%
Orifice (for larger pipes, uncalibrated)	± 1.0%
Weigh Tank	± 1%
Volume Tank	± 4%
Gaseous Fuel Flow	Note (1)
Orifice	
Calibrated and Inspected	± 0.5%
Calibrated and Uninspected	± 2%
Uncalibrated and Inspected	± 0.75%
Turbometers	
Non Self-correcting	± 1.0%
Self-correcting	± 0.75%
Solid Fuel and Sorbent Flow	
Gravimetric Feeders	
Calibrated with Weigh Tank	± 2%
Calibrated with Standard Weights	± 5%
Uncalibrated	± 10%
Volumetric Feeders	
Belt	
Calibrated with Weigh Tank	± 3%
Uncalibrated	± 15%
Screw, Rotary Valve, etc.	
Calibrated with Weigh Tank	± 5%
Uncalibrated	± 15%
Weigh Bins	
Weigh Scale	± 5%
Strain Gauges	± 8%
Level	± 10%
Impact Meters	± 10%
Residue Flow	
Isokinetic Dust Sampling	± 10%
Weigh Bins	
Weigh Scale	± 5%
Strain Gauges	± 8%
Level	± 20%
Screw Feeders, Rotary Valves, etc.	
Calibrated with Weigh Tank	± 5%
Uncalibrated	± 15%
Assumed Split (Bottom Ash/Fly Ash)	10% of total ash
Solid Fuel and Sorbent Sampling	Tables 4.3-2 and 4.3-3
Stopped Belt	± 0%
Full Cut	≥ 1%
"Thief" Probe	≥ 2%
Time-Lagged	≥ 5%
Liquid and Gaseous Fuel Sampling	Tables 4.3-4 and 4.3-5

(continued)

Copyright ASME International
Provided by IHS under license with ASME
No reproduction or networking permitted without license from IHS Not for Resale

TABLE 4.3-1 (CONT'D)
POTENTIAL INSTRUMENTATION BIAS LIMITS (Continued)

Instrument	Bias Limits [Note (1)]
Flue Gas Sampling	
Point-by-Point Traverse	Section 7
Composite Grid	Section 7
Residue Sampling	
Isokinetic Dust Sampling	± 5%
"Thief" Probe	± 200%
Bottom Ash	± 50% [Note (9)]
Bed Drain	± 20%
Fuel Handling and Storage	– 10% of Moisture Value
Limestone Handling and Storage	+ 5% of Moisture Value
Residue	0
Flue Gas Analysis	
Oxygen Analyzer	
Continuous Electronic Analyzer	± 1.0% of span
Orsat Analyzer	± 0.2 points
Portable Analyzer	± 5% of reading ± 2% of span
Calibrated on Air	
Calibrated on Cal Gas	
Carbon Monoxide	
Continuous Electronic Analyzer	± 20 ppm
Orsat Analyzer	± 0.2 points
Sulfur Dioxide	
Continuous Electronic Analyzer	± 10 ppm
CEM Electronic Analyzer	± 50 ppm
Oxides of Nitrogen	
Chemiluminescent	± 20 ppm
CEM Electronic Analyzer	± 50 ppm
Hydrocarbons	
Flame Ionization Detector	± 5%
Electric Power	
Voltage or Current	
Current Transformer	± 10%
Potential Transformer	± 10%
Hand-Held Digital Ammeter	± 5%
Watts	
Wattmeter	± 2%
Humidity	
Hygrometer	± 2% RH
Sling Psychrometer	± 0.5 gradation
Weather Station	Note (6)

NOTES:

(1) All bias limits are percent of reading unless noted otherwise.

(2) For thermocouples, error may be introduced depending on the method of correcting for a reference junction. Also, the algorithm for conversion of thermocouple millivolts to temperature may introduce errors.

(3) See ASME PTC 19.3, Temperature Measurement, for applicability.

(4) NIST traceable instruments have a bias limit equal to the accuracy of the calibration device. These bias limits do not include drift.

(5) See ASME PTC 19.2, Pressure Measurement, for applicability.

(6) Must be corrected for elevation and distance from weather station.

(7) These bias limits include user-induced errors such as probe location.

(8) Calibrations at test Reynold's number or use ASME PTC 6 nozzle for extrapolation. For uncalibrated devices, flow coefficients and uncertainties can be taken from PTC 19.5, MFC-3M, or ISO 5167.

(9) Bottom ash carbon content should be very low.

Copyright ASME International
Provided by IHS under license with ASME
No reproduction or networking permitted without license from IHS Not for Resale

TABLE 4.3-2
POTENTIAL BIAS LIMITS FOR COAL PROPERTIES

Coal Property	Analysis Procedure	Bias Limit	Comments
Sampling	ASTM D 2234	± 10% of Ash Content ± 2% of other constituents	< 5% ash ± 0.5%
Sample Preparation	ASTM D 2013	None	
Air Dry Moisture	ASTM D 3302	± 0.31% Bituminous ± 0.33% Subbituminous	
Ash Content	ASTM D 3174	± 0.15% Bituminous with no carbonate ± 0.25% Subbituminous with carbonate ± 0.5% > 12% ash with carbonate and pyrite	
Proximate	ASTM D 5142	Moisture = 0.12 + 0.017x Ash = 0.07 + 0.0115x VM = 0.31 + 0.0235X	Automated Method
Total Moisture	ASTM D 3173	± 0.15% for fuels < 5% moisture ± 0.25% for fuels > 5% moisture	
Carbon	ASTM D 5373 ASTM D 3178	± 1.25% (1 − %H_2O/100) ± 0.3% [Note (1)]	> 100 mg sample
Hydrogen	ASTM D 5373 ASTM D 3178	± 0.15% (1 − %H_2O/100) ± 0.07% [Note (1)]	> 100 mg sample
Nitrogen	ASTM D 5373 ASTM D 3179	± 0.09% (1 − %H_2O/100) ± 0.205x − 0.13	> 100 mg sample Method B
Sulfur	ASTM D 4239 ASTM D 3177	± 0.05% Bituminous ± 0.07% Subbituminous ± 0.5% for fuels < 2% sulfur ± 0.1% for fuels > 2% sulfur	
HHV	ASTM D 2015	± 54 Btu/lb dry basis—Anthracite/Bituminous ± 70 Btu/lb dry basis—Subbituminous/Lignite	
Converting Analysis to Different Basis	ASTM D 3180	None	

GENERAL NOTE:
All bias limits are absolute unless otherwise indicated.

NOTE
(1) Estimated based on repeatability.

be exceeded, and by noting that most processes are governed by well-known physical principles (e.g., radiant heat transfer occurs from a hotter object to a colder object; air can only leak into a sample train held under vacuum).

4.4 TEMPERATURE MEASUREMENT

4.4.1 General. Temperature is typically measured with thermocouples (TCs), resistance temperature devices (RTDs), temperature gauges, or mercury-in-glass thermometers. These devices produce either a direct reading or a signal which can be read with a hand-held meter or data logger.

Data measurement devices must be allowed to reach thermal equilibrium in the environment where the measurements will be taken. Thermocouple lead wires shall be placed in a nonparallel position relative to electrical sources to avoid possible electrical interference.

RTDs have a narrower operating range and a slower response time than thermocouples, but are potentially more accurate.

Mercury-in-glass thermometers are limited to measurement of temperatures lower than the boiling point of mercury and to visual reading only.

Each of these devices has advantages and constraints to its use. Users of this Code are referred to PTC 19.3 for further information on temperature measurement techniques.

Copyright ASME International
Provided by IHS under license with ASME
No reproduction or networking permitted without license from IHS
Not for Resale

TABLE 4.3-3
POTENTIAL BIAS LIMITS FOR LIMESTONE PROPERTIES

Limestone Property	Analysis Procedure	Bias Limits	Comments
Limestone Constituents	ASTM C 25	Calcium Oxide ± 0.16% Magnesium Oxide ± 0.11% Free moisture ± 10% Value Inert by difference ± 5.0% of Value	Test Method 31 Test Method 31
Sampling	Subsection 4.8.2	± 2.0% thief sample ± 5.0% other	

GENERAL NOTES:
(a) All bias limits are absolute unless otherwise indicated.
(b) Free moisture, inerts, and sampling bias are suggested values.

TABLE 4.3-4
POTENTIAL BIAS LIMITS FOR FUEL OIL PROPERTIES

Fuel Oil	Analysis Procedure	Bias Limits			Comments
Sampling	ASTM D 4057	± 0.5% for multiple samples ± 1% for single sample ± 2% for supplier analysis			
API Gravity	ASTM D 1298	± 0.25 API for Opaque (Heavy Oil) ± 0.15 API for Transparent (Distillate) ± 5 API if estimated			
Water Content	ASTM D 95	± 0.1% for fuels < 1% Water ± 5% of measured value for > 1% Water			
Ash	ASTM D 482	± 0.003% for fuels < 0.08% Ash ± 0.012% for fuels 0.08–0.18% Ash			
Sulfur	ASTM D 1552	%S	IR	Iodate	
		< 0.5	0.07%	0.04%	
		0.5 – 1	0.11%	0.06%	
		1 – 2	0.14%	0.09%	
		2 – 3	0.19%	0.13%	
		3 – 4	0.22%	0.20%	
		4 – 5	0.25%	0.27%	
Carbon	ASTM D 5291 ASTM D 3178 [Note (1)]	± $(x + 48.48)$ 0.009 ± 0.3% [Note (2)]			
Hydrogen	ASTM D 5291 ASTM D 3178 [Note (1)]	± $(\sqrt{x})$ 0.1157 ± 0.07% [Note (2)]			
Nitrogen	ASTM D 5291 ASTM D 3228	± 0.23 ± 0.095 $\sqrt{N}$			Reported to 0.00
Heating Value	ASTM D 240 ASTM D 4809	86 Btu/lbm ± 49 Btu/lbm all fuels ± 51 Btu/lbm non-volatiles ± 44 Btu/lbm volatiles			

GENERAL NOTE:
All bias limits are absolute unless otherwise indicated.
NOTES:
(1) Modified for oil.
(2) Estimated based on repeatability.

Copyright ASME International
Provided by IHS under license with ASME
No reproduction or networking permitted without license from IHS Not for Resale

TABLE 4.3-5
POTENTIAL BIAS LIMITS FOR NATURAL GAS PROPERTIES

Natural Gas	Analysis Procedure	Bias Limits	Comments
Sampling	ASTM D 5287	± 0.5% for multiple sample ± 1.0% for single sample ± 2.0% for supplier analysis on-line analysis—use supplier specification for Guidance	
Gas Constituents	ASTM D 1945	Mole % of constituent: 0.0 – 0.1 ± 0.01% 0.1 – 1.0 ± 0.04% 1.0 – 5.0 ± 0.05% 5.0 – 10.0 ± 0.06% > 10 ± 0.08%	
Higher Heating Value, calculated	ASTM D 3588	None	Perturbated with fuel constituents
Higher Heating Value	ASTM D 1826	0.3 – 0.55%	

GENERAL NOTE:
All bias limits are absolute unless otherwise indicated.

4.4.2 Bias for Temperature Measurement. When estimating the bias of a temperature measurement, test personnel should consider the following potential sources. Not all sources are listed, and some of those listed may not be applicable to all measurements. These factors should be considered in conjunction with the factors listed in Table 4.3-1:

- TC type
- RTD type
- calibration
- lead wires
- thermowell location/geometry/condition
- pad weld (insulated/uninsulated)
- stratification of flowing fluid
- grid size
- grid location
- ambient conditions at junctions
- ambient conditions at meter
- intermediate junctions
- electrical noise
- heat conduction and radiation
- potentiometer/voltmeter
- reference junction accuracy
- drift
- thermometer nonlinearity
- parallax

4.4.3 Air and Gas Temperatures. Air and flue gas flowing through a duct have nonuniform velocity, temperature, and composition. This is especially true near a flow disturbance, such as a bend or transition. Generally, temperature uncertainty can be reduced either by sampling more points or by using more sophisticated calculation methods. To compensate for stratification and to obtain a representative average, multiple points must be sampled in a plane perpendicular to the flow. The measurement plane should be located away from bends, constrictions, or expansions of the duct. If the stratification is severe, mass flow weighting as described in Subsection 4.3.4 should be applied to reduce potential errors in the average temperature. Thermocouples shall be read individually and not be grouped together to produce a single output.

If flue gas temperature is measured at a point where the temperature of the gas is significantly different from the temperature of the surrounding surface, an error is introduced. This situation occurs when the gas temperature is high, and the surface is cooled well below the gas temperature. The thermocouple is cooled by radiation to the surrounding surface, and this reduction in measured temperature should be taken into account. A High Velocity Thermocouple (HVT) probe can be used to reduce this error.

4.4.3.1 Method of Measurement. This Code recognizes three different methods for calculating average values from multiple point samples as discussed in Subsection 5.2.3:

- multiple midpoint
- triple midpoint
- composite midpoint

Copyright ASME International
Provided by IHS under license with ASME
No reproduction or networking permitted without license from IHS
Not for Resale

All of these methods require specific placement of sampling points. The minimum number of points is given; in all cases, uncertainty can be reduced by increasing the number of points. The following rules should apply to location of sampling points in all cases.

(a) Rectangular Ducts. Rectangular ducts shall be divided to form a grid with equal areas. Samples shall be taken at the centroid of each equal area. For ducts larger than 9 sq ft, there should be four to 36 sampling points, based on the cross-sectional area of the duct. Each equal area should be no larger than 9 sq ft unless there are more than 35 points. In such cases, the equal areas may be larger than 9 sq ft. The Code does not require more than 36 points.

There should be a minimum of two points spanning each dimension (height and width) of the duct cross section. In ducts with severe stratification, it is recommended that points be added in the direction of the steepest gradient.

According to the bias models suggested in Subsection 7.5.3.2, the bias due to numerical integration decreases as the square of the number of points; therefore, using more points has a significant effect on that component of the uncertainty.

The shape of the equal areas should be one of the following:

- a rectangle with the ratio of height to width the same as that of the cross section of the duct, so that it is of the same geometrical shape as the cross section, as shown on Fig. 4.4-1 sketch (a). This is the preferred method
- any rectangle, as shown on Fig. 4.4-1 sketch (b), that is more nearly square than the geometric shape on Fig. 4.4-1 sketch (a)
- a square, as shown on Fig. 4.4-1 sketch (c)

If the shape of the equal area is not square, the long dimension should align with the long dimension of the cross section. If a greater number of measurement points are being used than is recommended, the additional points may be added without concern for the aspect ratio.

(b) Circular Ducts. Circular ducts should be divided into equal areas of 9 sq ft or less. There should be four to 36 sampling points based on the cross-sectional area of the duct. Parties to the test may agree to divide the cross section into either 4, 6, or 8 sectors. The location of each sampling point must be at the centroid of each equal area. The location of these sampling points may be determined by the method shown in the example on Fig. 4.4-2, which shows the use of 20 points and four sectors. There must be at least one point per sector.

(c) Additional Rules for Using the Triple Midpoint Calculation Method. When the triple midpoint sampling method is being used to determine average value, the guidance regarding rectangular ducts is followed. However, the grid must contain a multiple of three points in each direction, and a circular duct must have six equal sectors.

If the parties to the test agree to use a greater number of points there must still be a multiple of three in each direction for rectangular ducts and three in each sector for circular ducts.

(d) Additional Rules for Using the Composite Midpoint Calculation Method. To use the composite midpoint method to determine the average value, the number of grid points must be a multiple of three in one direction only. This may be in either direction for rectangular ducts. If six sectors are used, there may be any number of points in the sector. If either four or eight sectors are used, the number of points in each sector must be a multiple of three.

If the parties to the test agree to use a greater number of points, a multiple of three must be used in one direction.

4.4.3.2 Estimating Bias. An estimate of the bias from a temperature measurement grid is a combination of bias limits from temperature primary element and sensor type, data acquisition, grid size, temperature distribution, averaging method, and flow weighting. Potential sources of these biases are described in Section 4.3 and Subsection 4.4.2. Models for the estimation of biases due to flow weighting, grid size, and averaging method are suggested in Section 7.5.

When the average entering air temperature or exiting gas temperature is a mass weighted average of two or more streams at different temperatures, the impact of the bias associated with the determination of the mass flow rate shall be included in the overall bias for the average air/gas temperature.

4.4.4 Steam and Water Temperatures. Steam and water flowing in pipes typically have an approximately uniform temperature distribution. A potential exception is in the piping from a desuperheater in which spray impingement could cause nonuniformity.

4.4.4.1 Method of Measurement. Selection of the method of measurement and the temperature measuring instruments depends upon the conditions of the individual case. Steam and water temperatures are usually measured by insertion of the sensing device into a thermowell located in the piping. Alternatively, "pad" or "button" thermocouples can be located around the

Copyright ASME International
Provided by IHS under license with ASME
No reproduction or networking permitted without license from IHS
Not for Resale

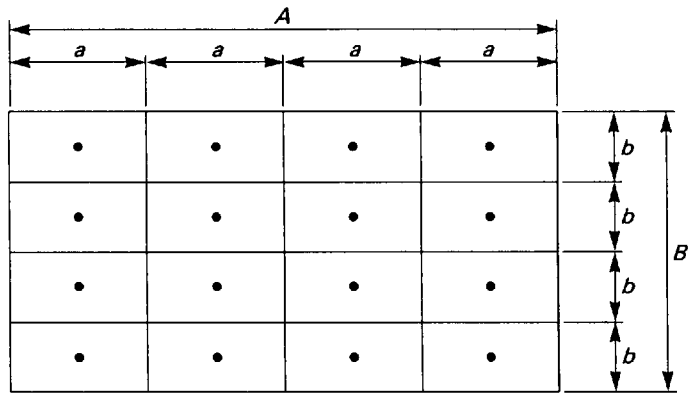

(a) Same Geometric Shape as Cross Section

$$\frac{A}{B} = \frac{a}{b}$$

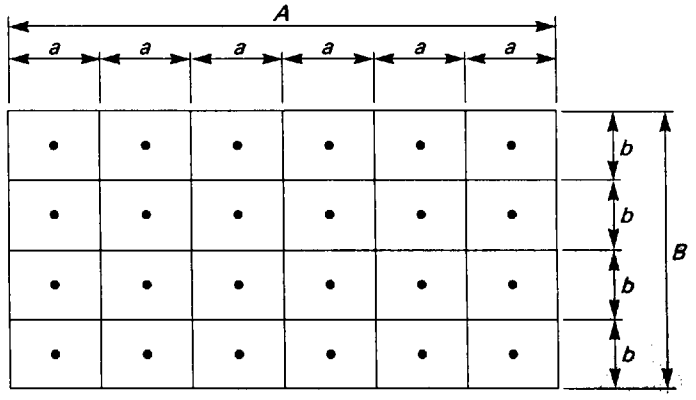

(b) More Nearly Square Than Shown in sketch (a) above

$$\frac{A}{B} > \frac{a}{b} \text{ and } a > b$$

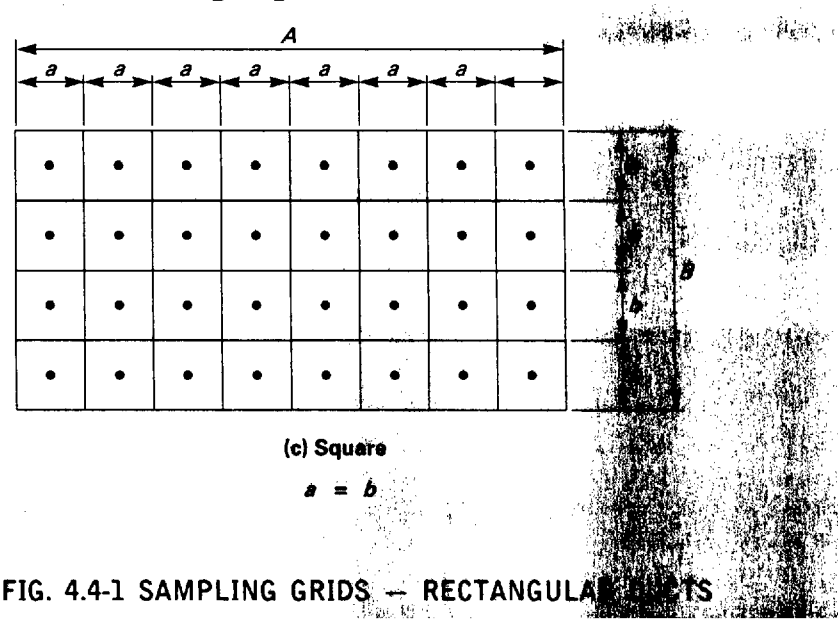

(c) Square

$a = b$

FIG. 4.4-1 SAMPLING GRIDS — RECTANGULAR DUCTS

Copyright ASME International
Provided by IHS under license with ASME
No reproduction or networking permitted without license from IHS
Not for Resale

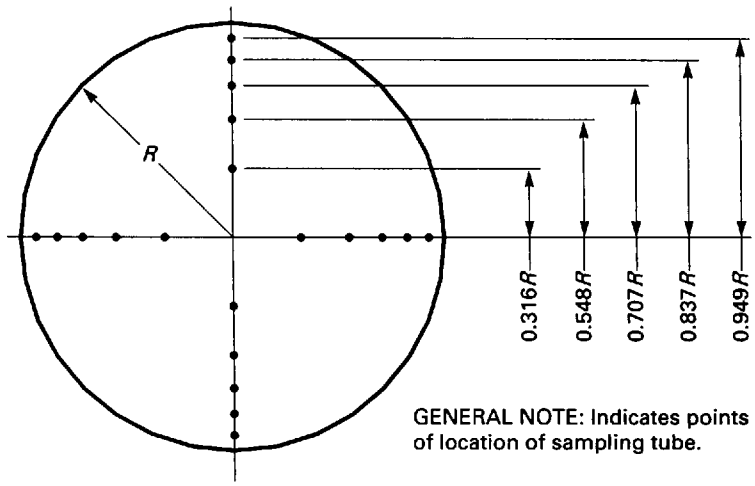

GENERAL NOTE: Indicates points of location of sampling tube.

Formula for determining location points in circular duct:

$$r_p = \sqrt{\frac{2R^2(2p-1)}{n}}$$

where
r_p = distance from center of duct to point p
R = radius of duct
p = sampling point number. To be numbered from center of duct outward. All four points on same circumference have same number.
n = total number of points

NOTE: r_p will be in same units as R.

Example: Duct radius = R; 20 points total; distance to point 3 = r_3.

$$r_3 = \sqrt{\frac{2R^2(2 \cdot 3-1)}{n}} = \sqrt{\frac{2R^2(5)}{20}} = \sqrt{0.5R^2} = 0.707R$$

FIG. 4.4-2 SAMPLING GRID — CIRCULAR DUCTS

Copyright ASME International
Provided by IHS under license with ASME
No reproduction or networking permitted without license from IHS
Not for Resale

pipe and insulated, but use of this method substantially increases the uncertainty of the measurement.

4.4.4.2 Estimating Bias. An estimate of the bias from a temperature measurement is a combination of bias limits from the temperature primary element, sensor type, and data acquisition. Potential sources of these biases are discussed in Section 4.3 and Subsection 4.4.2.

4.4.5 Solid Streams. The temperatures of solid streams entering or leaving the unit are often difficult to measure. The parties to the test should decide whether the temperature of these streams will be assigned a value or measured. If temperatures are to be measured, the temperature probe should be inserted into a flowing stream. The average temperature of multiple solid streams should be mass flow weighted.

4.4.5.1 Method of Measurement. The following locations and methods of measurement shall be used:

(a) Fuel. A rigidly supported temperature measuring instrument should be inserted into the solid fuel stream as close as practical upstream of the point where the primary/transport air is mixed with the fuel.

(b) Sorbent. A rigidly supported temperature measuring instrument should be inserted into the solid sorbent stream as close as practical upstream of the point where the transport air is mixed with the sorbent or the fuel/sorbent mixture.

(c) Residue. Residue that carries over in the flue gas stream (fly ash) can be considered to be the same temperature as the gas at the extraction point. An exception is ash leaving an air heater. The temperature of the gas leaving the air heater excluding leakage shall be used. For bed drains in fluidized bed combustors, the bed temperature may typically be used unless bed drain coolers return heat to the boundary. In that case, the temperature of the bed drain leaving the cooler should be measured. Refer to Section 5.14 for estimating bottom ash temperature. If the residue temperature is measured (such as residue leaving a grate), a rigidly supported temperature measuring instrument should be inserted into each flowing residue stream as close as practical to the point where the residue leaves the boundary.

4.4.5.2 Estimating Bias. An estimate of the bias from a temperature measurement is a combination of bias limits from temperature primary element, sensor type, and data acquisition. Section 4.3 and Subsection 4.4.2 discuss potential sources of these biases. When biases are assigned to parameters which are assumed, typically a larger value for bias is chosen than if the parameter is directly measured. If the mass flows of multiple streams are not approximately equal and the average temperature is not flow weighted, a higher bias should be assigned. If stratification is suspected in the solid stream, this should be incorporated into the bias estimate.

4.4.6 Liquid and Gaseous Fuels. Liquid or gaseous fuels flowing in pipes usually have approximately uniform temperature distribution.

4.4.6.1 Method of Measurement. A temperature measuring instrument should be inserted into the fuel stream at the entrance to the unit, preferably near the flow measurement device. If the fuel is heated by a source external to the unit being tested, the inlet temperature shall be measured after this heater. If the fuel is heated directly from the unit being tested, the temperatures shall be measured before the heater.

4.4.6.2 Estimating Bias. An estimate of the bias from a temperature measurement is a combination of bias limits from temperature primary element, sensor type, and data acquisition. Section 4.3 and Subsection 4.4.2 discuss potential sources of these biases.

4.5 PRESSURE MEASUREMENT

4.5.1 General. Total pressure is the sum of static pressure and velocity pressure. Change in static head is calculated based on the average fluid conditions and local ambient conditions. Velocity pressure is usually calculated from average fluid velocity and density. If velocity is to be measured, refer to Section 4.6 for guidance in making these measurements. This section addresses the measurement of static pressure.

4.5.2 Bias for Pressure Measurement. When estimating the bias of a pressure measurement, test personnel should consider the following list of potential sources. Not all sources are listed, and some of those sources listed may not be applicable to all measurements. These factors should be considered in conjunction with the factors listed in Table 4.3-1.

- gauge type
- manometer type
- transducer type
- calibration
- tap location/geometry/flow impact
- probe design
- stratification of flowing fluid
- number and location of measurements
- water leg
- specific gravity of manometer fluid
- ambient conditions at sensor
- ambient conditions at meter
- hysteresis

Copyright ASME International
Provided by IHS under license with ASME
No reproduction or networking permitted without license from IHS Not for Resale

- electrical noise
- potentiometer/voltmeter
- drift
- transducer nonlinearity
- parallax

4.5.3 Air and Gas — Static and Differential Pressure. The static pressure in air and gas ducts may be required to determine pressure drop. Pressure drop determinations should be performed using differential measuring apparatus rather than two separate instruments.

4.5.3.1 Method of Measurement. Pressure is measured with gauges, manometers, or transducers. The output of these devices is either visual or a signal which can be read with a hand-held meter or data logger. PTC 19.2 provides further information on pressure measurement techniques.

Static pressure connections must be installed to minimize errors resulting from gas velocity impingement. This may be accomplished by proper location of taps around the perimeter of the duct or by use of specially designed probes. Measurements should be made at more than one location in or around the plane. Piping or tubing should be specifically installed for the test, and should be verified leakproof. Provisions should be made for cleaning and draining. Connections from the instrument to the pressure tap should slope downward to allow condensate to flow back into the duct. When this is not possible, provisions must be made to account for condensate water legs. Purging may be used to keep pressure sensing lines clear. If purging is used, a constant low flow should be maintained.

4.5.3.2 Estimating Bias. An estimate of the bias from a pressure measurement is a combination of bias limits from primary element, installation effects, and data acquisition. Potential sources of these biases are addressed in Section 4.3 and Subsection 4.5.2.

4.5.4 Steam and Water — Static and Differential Pressure. The static pressure in steam and water piping may be required to determine fluid properties or pressure drop. To minimize uncertainty, pressure drop determinations should be performed using differential measuring apparatus rather than two separate instruments.

4.5.4.1 Method of Measurement. Pressure measurement devices should be located to minimize the effects of temperature and vibration. Adhere to the following in the installation of pressure measuring devices:

- Pressure measurement connections should be short and direct.
- All pressure measurement connections should be leakproof, with provisions for cleaning and drainage.
- Pressure connections should be located and installed with care to exclude velocity effects.
- Connections from the instrument to the pressure tap should be purged and condensate allowed to fill the lines. Condensate water legs shall be included in the calculations.

4.5.4.2 Estimating Bias. An estimate of the bias from a pressure measurement is a combination of bias limits from primary element, tap type, and data acquisition. Potential sources of these biases are discussed in Section 4.3 and Subsection 4.5.2.

4.5.5 Barometric Pressure. Barometric pressure is required to determine ambient conditions.

4.5.5.1 Method of Measurement. The preferred method for determining barometric pressure is from a barometer at the test site. An alternate method is the use of the barometric pressure, not corrected to sea level, reported at the nearest weather station. The elevation of the weather station's reading and the test site should be noted and corrections made for any differences in elevation.

4.5.5.2 Estimating Bias. The use of a barometer or other such measurement device at the site will be considered to have a negligible bias limit. Data from a weather station are considered the least accurate, and if used an appropriate bias should be assigned.

4.6 VELOCITY TRAVERSE

4.6.1 General. A velocity traverse consists of measurements taken at numerous locations in a plane perpendicular to the flow. These measurements should include at least velocity pressure, static pressure, and temperature, and may also include velocity vector angles. The user should refer to Sections 4.4 and 4.5 related to temperature and pressure measurements for guidelines and specific instructions.

A probe is inserted into the duct, and measurements are made at a number of locations corresponding to the centers of equal areas. The probe is usually one of several types which sense the velocity pressure and pressure differentials indicating yaw and pitch. Users of this Code are referred to PTC 19.5 (see Note below) and PTC 11, Fans, for further information on velocity measurement techniques.

Copyright ASME International
Provided by IHS under license with ASME
No reproduction or networking permitted without license from IHS
Not for Resale

NOTE: At the time this Code was published, a revision of PTC 19.5 was being prepared. This revised version or a later revision should be consulted.

4.6.2 Bias for Velocity Traverse. When estimating the bias of a velocity traverse, test personnel should consider the following potential sources. Not all sources are listed, and some of those listed may not be applicable to all measurements. These factors should be considered in conjunction with the factors listed in Table 4.3-1 and Subsections 4.4.2 and 4.5.2:

- probe type
- calibration
- stratification of flowing fluid
- turbulent/laminar flow conditions
- yaw
- pitch
- grid size
- grid location
- ambient conditions at measurement location
- parallax
- pressure errors
- fluctuation of pressure in time
- temperature errors

4.6.3 Method of Measurement. Measurements are taken at the centers of equal areas. The traverse points must correspond to the temperature or oxygen measurement points. PTC 19.5 and ASME PTC 11 may be consulted for information on velocity measurement. Numerous types of probes are used for velocity measurement, such as standard pitot, S-type, three-hole and five-hole, turbometer mass flow probe, and others. Determination which accounts for the direction of flow at the plane of measurement is preferred.

4.6.4 Estimating Bias. An estimate of the bias from a velocity traverse is a combination of bias limits from probe type, measurement methods, and data acquisition. Section 4.3 and Subsection 4.6.2 include potential sources of these biases. If the probe used for the velocity traverse does not account for the approach angle to the plane of measurement, the velocity may be overestimated, and an appropriate bias limit should be included.

4.7 FLOW MEASUREMENT

4.7.1 General. Numerous methods are employed in industry to determine the flow rate of solid, liquid, or gaseous streams. PTC 19.5 is the primary reference for flow measurements. ASME document MFC-3M, PTC 6, Steam Turbines, and ISO 5167 provide further information on flow measurement techniques. These sources include design, construction, location, and installation of flowmeters, the connecting piping, and computations of flow rates. If an individual stream flow rate is to be determined by velocity traverse refer to Section 4.6.

For multiple streams where the total flow can be calculated more accurately than measured (e.g., air, flue gas, residue, etc.), all but one stream may be measured and the unmeasured stream flow rate calculated by difference. If all streams are measured, the mass flow fraction of each stream shall be calculated from the measured mass flow rate. The mass flow rate of the individual streams is then determined from the product of the mass flow fraction of the individual streams and the total calculated mass flow rate.

4.7.2 Bias for Flow Measurement. Flow is often measured indirectly, i.e., using measured differential pressure, pressure, and temperature; therefore, the measured inputs to the flow calculation must be examined for sources of bias and combined into the bias of the flow measurement. When estimating the bias of a flow measurement, test personnel should consider the following potential sources. Not all sources are listed, and some of those listed may not be applicable to all measurements. These factors should be considered in conjunction with the factors listed in Table 4.3-1:

- calibration of primary element, e.g., orifice, nozzle, venturi, airfoil, and differential sensing probes
- stratification of flowing fluid
- temperature biases
- pressure biases
- installation
- condition of nozzle or orifice
- pressure correction (compensation)
- temperature correction (compensation)
- Reynolds number correction
- measurement location
- fan/pump curve
- valve position
- level accuracy/difference
- heat balance inputs/equations
- weir
- tap location

4.7.3 Air and Flue Gas. The total mass flow of air and flue gas crossing the steam generator boundary is calculated stoichiometrically. It may be necessary to measure the air or flue gas flow in addition to the temperature of the stream to account for an individual air or gas stream that crosses the steam generator

Copyright ASME International
Provided by IHS under license with ASME
No reproduction or networking permitted without license from IHS
Not for Resale

boundary. The energy crossing the boundary in that air or gas stream then may be calculated.

4.7.3.1 Methods of Measurement. There are numerous methods for the measurement of air and gas flow (e.g., venturi, airfoil, velocity traverse, heat balance, etc.). If plant instrumentation is used, it should be calibrated. The flow may be calculated from velocity, as measured according to Section 4.6, the density of the fluid, and the duct cross-sectional area. The use of sophisticated traversing strategies such as Gauss or Tchebycheff distribution of points as described in PTC 19.5 generally leads to more accurate determination of flows.

4.7.3.2 Estimating Bias. The most accurate way to determine the flow of air or gas in most applications is by calculation. The steam generator efficiency, total output, flue gas weight per pound of fuel, and heating value of the fuel can all be determined accurately. The measurement of air and flue gas flow is subject to significant error. Using a standard pitot tube or a Stauschibe (S-type or forward-reverse) tube can result in overestimating the flow if the flow is not perpendicular to the plane of measurement. The area of the duct may also be difficult to determine accurately because of obstructions within the duct or inaccurate dimensions. An estimate of the bias from an air or gas flow measurement is a combination of bias limits from measurement methods and data acquisition. Section 4.3 and Sub section 4.7.2 discuss potential sources of these biases. If the probe used for velocity traverse does not account for the approach angle to the plane of measurement, the velocity may be overestimated, and an appropriate bias limit should be included.

4.7.4 Steam and Water. Certain steam and water flow measurements may be required, depending on the objective of the test. When the determination of output is required, the preferred method is to use a calibrated and inspected flow element such as the ASME throat tap nozzle, as described in PTC 6, Steam Turbines. On large units, the PTC 6 nozzle is preferred because of the potentially high Reynolds numbers of the measured flow. The requirement for the PTC 6 nozzle is eliminated if the flow element can be calibrated at the Reynolds numbers that will be encountered during the test. The PTC 6 flow nozzle should be used if flow coefficients need to be extrapolated to higher Reynolds numbers. While an energy balance calculation is acceptable for determining the superheat desuperheating spray flow, reheat desuperheating spray flow should be directly measured rather than calculated by energy balance. If the reheat desuperheating spray flow is low enough that the differential produced by the orifice or nozzle is at the lower range of the system, a measuring device and transmitter which is accurate at the spray flow rate or an energy balance calculation should be used.

4.7.4.1 Method of Measurement. The following methods of measurement are typically used to determine steam and water flows:

- Flow masurement through a nozzle, venturi, or orifice. One method of measuring flow is to measure pressure drop across a flow nozzle, venturi, or orifice plate. This method is usually the most accurate and should be used for all critical flow measurements.
- Energy and mass balance calculation. Certain flows may be quantified by energy balance calculations. These flows typically include reheat extraction flow to feedwater heaters, and possibly, superheater desuperheating spray flow. The method of calculation is outlined in Section 5.6. Enthalpies shall be determined from the ASME 1967 Steam Tables, using pressures and temperatures measured with test instrumentation.
- Estimated flows. In some cases, it may not be feasible to quantify a flow using any of the methods listed above. In these cases, flow curves relating to either a known flow or a valve position may be used. Steam flow based on first-stage pressure, estimated turbine leakage based on main steam flow, or blowdown flow based on valve turns are examples of this type of flow. Design performance data also may be used. All parties involved in the performance test must agree to the method of calculation prior to the test, and an appropriate uncertainty must be assigned.

4.7.4.2 Estimating Bias. An estimate of the bias from a flow measurement is a combination of bias limits from primary element type, sensor type, and data acquisition installation effect. Section 4.3 and Subsection 4.7.2 discuss potential sources of these biases.

4.7.5 Liquid Fuel. The input-output method for efficiency determination requires the quantity of liquid fuel burned.

4.7.5.1 Method of Measurement. The quantity of fuel may be determined by flow measurement device, weigh tank, or volume tank. Refer to Subsection 4.7.4.1 for discussion of the use of flow nozzles and thin plate orifices. If a level change in a volume tank is utilized to determine the flow measurement, accurate density determination is required. ASTM D 1298 provides procedures to determine API Gravity and density.

Recirculation of fuel between the point of measurement and point of firing shall be measured and accounted

Copyright ASME International
Provided by IHS under license with ASME
No reproduction or networking permitted without license from IHS Not for Resale

for in the flow calculation. Branch connections on the fuel piping shall be either blanked off or provided with double valves.

4.7.5.2 Estimating Bias. An estimate of the bias from a flow measurement is a combination of bias limits from primary element type, sensor type, and data acquisition. Section 4.3 and Subsection 4.7.2 discuss potential sources of these biases.

4.7.6 Gaseous Fuel. For the input-output method, the quantity of gaseous fuel burned must be determined.

4.7.6.1 Method of Measurement. Measurement of the relatively large volumes of gaseous fuel normally encountered while testing steam generators requires the use of an orifice, flow nozzle, or turbine meter. The pressure drop shall be measured using a differential pressure gauge or differential pressure transmitter. Outputs from these devices can be read manually, via hand-held meters, or with data loggers. When gas flow is measured, the temperature and pressure used in the calculation of density are extremely important. Small variations can cause significant changes in the calculated gas density. In addition, the supercompressibility factor has a significant effect on the determination of gas density.

4.7.6.2 Estimating Bias. An estimate of the bias from a flow measurement is a combination of bias limits from primary element type, sensor type, and data acquisition. Section 4.3 and Subsection 4.7.2 discuss potential sources of these biases. The impact of pressure and temperature measurements on the gas density should be evaluated at the test operating conditions because a 10 psi deviation or a 2°F variation can impact flow as much as 1%.

4.7.7 Solid Fuel and Sorbent Flow Measurement. The accurate measurement of solid flow is difficult because of solid material variability.

4.7.7.1 Method of Measurement. Numerous methods are available to measure the flow of solids, such as gravimetric feeders, volumetric feeders, isokinetic particulate sample, weigh bins/timed weights, impact meters, etc. To reduce uncertainty of any of these methods below 5 to 10% requires extensive calibration against a reference. The calibration can involve the collection of the solid material into a container which can be weighted rather than placing weights on the belt. For example, the output of a gravimetric feeder can be directed to a container suspended by load cells, and the rate of feed indicated by the feeder can then be compared to the timed catch in the container.

It is even more difficult to assess the accuracy of volumetric feeders. This assessment requires assumptions about the volume of material passed per revolution and the density of the material. The rotor may not be full, the density may vary as a result of size distribution or other factors, and all these parameters may vary over time.

Calibrations of solid flow measurement devices should be conducted just prior to the testing and at frequent intervals to ensure the minimum bias.

4.7.7.2 Estimate of Bias. The bias from a solid flow measurement is one of the most difficult parameters to determine. Bias limits from instrument response variation resulting from size distribution, uneven loading on the weigh scale, or varying densities should be considered. Section 4.3 and Subsection 4.7.2 discuss other potential sources of biases.

4.7.8 Residue Splits. The amount of residue leaving the steam generator boundary is required to determine the sensible heat loss in the residue streams and the weighted average of unburned carbon (and CO_2 on units that utilize sorbent) in the residue. Typical locations where the residue is removed periodically or continuously are furnace bottom ash (bed drains), economizer or boiler hoppers, mechanical dust collector rejects, and fly ash leaving the unit.

4.7.8.1 Method of Measurement. The calculated total residue mass flow rate is used since it is normally more accurate than a direct measurement. Therefore, the percent of the total residue that leaves each location must be determined. Several methods can be used to determine the split between the various locations:

- The mass flow rate should be measured at each location.
- The residue at one or more locations should be measured (usually the locations with the highest loading) and the quantity at the other locations should be calculated by difference. Where there is more than one unmeasured location, the split between these locations should be estimated.
- The residue percentage leaving each location may be estimated based on the typical results for the type of fuel and method of firing.

The parties to the test shall reach agreement on what streams are to be measured and values for any estimated splits prior to the test.

The fly ash concentration leaving the unit, determined in accordance with Section 4.11, is used to calculate residue mass flow rate leaving the unit. See Section 5 for calculating the mass flow rate from the grain loading.

Copyright ASME International
Provided by IHS under license with ASME
No reproduction or networking permitted without license from IHS Not for Resale

The mass flow rate of residue discharged from hoppers or grates in a dry state may be determined from weigh bins/timed weights, e.g., the number of rotations of rotary feeders, screw speed, impact meters, etc. See Subsection 4.7.7.1 for considerations regarding calibration and sources of uncertainty.

Determining the mass flow rate of residue discharged from sluice systems is even more difficult than determining the dry state. Generally, the total discharge flow must be captured in bins or trucks, free-standing water drained off, and the bin or truck weighed and compared against the tare weight. Since residue is considered to leave the unit in a dry state, moisture content of the sample must be determined, and the measured wet mass flow rate corrected for moisture.

4.7.8.2 Estimating Bias. When splits are estimated, a mean value should be selected such that the same positive and negative estimate of bias can be used. A bias that would produce a split of less than zero or more than 100% must not be used. Refer to Section 4.11 regarding bias for dust loading (residue sampling). Where mass flow is determined from volumetric devices, considerations include repeatability of the fullness of the volume chamber and density and size distribution of the material. Also refer to Subsection 4.7.7.2.

4.8 SOLID FUEL AND SORBENT SAMPLING

4.8.1 General. The methods of sampling shall be agreed upon by all parties to the test and must be described in the test report. An appropriate uncertainty must be assigned for the method of sampling used for a test.

The sampling program conducted during the performance test has a significant effect on the steam generator efficiency result. Of all the data collected during a test, the higher heating value (HHV) of the solid fuel is the variable having the most influence on steam generator efficiency. Further, on some units, unburned combustibles loss in the residue (based on carbon concentration) is a major energy loss. If samples are not representative of the respective solid streams, the steam generator efficiency result is questionable. In addition, the variation in the composition of solids directly affects the uncertainty of the steam generator efficiency. In this Section, the methods used to determine variances, standard deviations, and precision indices for the samples obtained during the test are discussed. The estimation of bias limits is also addressed.

4.8.2 Methods of Solid Sampling. Fuel, sorbent (if applicable), and residue solids shall be sampled from a flowing stream as near to the steam generator as practical to ensure that samples are representative. If it is not possible or practical to sample near the steam generator, a time lag may be incurred between when the sample is taken and when it is actually injected or removed from the steam generator. This time lag must be determined based on estimated flow rates between the sample location and the steam generator. It is important that the time-lagged sample be representative of the actual material injected or removed from the steam generator. "Thief" sampling or taking a partial cut sample from silos or hoppers have large associated bias errors. One possible exception to this is sorbent, which in most cases is homogenous. Parallel streams such as coal feed with belt feeders have the potential for variation from stream to stream because of different flow rates, particle sizes, and chemical composition. Therefore, unless the chemical constituents of the samples can be shown to be uniform, the samples must be taken from each of the parallel streams and combined. If the flows for the parallel streams are unequal, the amount of samples of each parallel stream must be flow weighted for the composite sample. The flow for each of the parallel streams must be continuous throughout the test.

Depending on the costs associated with laboratory analyses and the availability of a historical data base, different options may be selected for different sample constituents (i.e., coal, sorbent, residue).

Fuel or sorbent samples collected from upstream of silos, tanks, or hoppers typically have larger biases than samples collected downstream from the silos, tanks, and hoppers. Samplings from upstream of silos, tanks, and hoppers are classified as alternate procedures because of the possibility of samples not being representative of fuel fired during the test. Alternate procedures should not be used for acceptance tests. For other test purposes, if alternate procedures are used, the parties to the test shall assign appropriate biases.

4.8.2.1 Sample Size. As stated previously, it is extremely important that any sample be as representative of the composition of the actual stream as possible. In addition, since there is a direct correlation between individual sample weight and variance, sufficient weight of individual samples is required to minimize the variance.

Generally, a complete cross section of the flowing stream is the most representative. This criterion, however, can mean different sample size requirements for different types of solid streams. For example, the fly ash residue stream sample should be obtained from isokinetic particulate sampling. This sample is typically

Copyright ASME International
Provided by IHS under license with ASME
No reproduction or networking permitted without license from IHS Not for Resale

very small. However, since it is taken from a complete and controlled traverse of the flue gas duct, the sample is representative. In this case, the small quantity is a minor factor in regard to the reliability of the sample.

Another example of the acceptability of a small quantity of sample is sorbent sampling. The size of sorbent may vary, but it is likely that the chemical composition does not vary across the size range or among different lots of sorbent. Therefore, a small sample can be representative of the entire sorbent feed during the test.

In summary, the actual sample size must be based on several factors, including size distribution, chemical composition variability, feed methods, flow capacities, and number of samples. In general, larger size samples result in lower variances. However, as sample size increases, so do sample preparation costs for reducing to a size for laboratory analysis. For manual sampling of coal or sorbent, samples typically weighting from 2 to 8 lb are collected. For automatic sampling devices, much larger samples can be collected.

The weight of the individual test sample must be equal to or greater than the weight of the samples used from a historical database. Otherwise, the variance of the test database could be greater than the variance of the historical data.

The factors previously noted, combined with good engineering judgment, costs, agreement between parties, and desired accuracy of sample analyses, should be used by the testing participants to determine the proper sample size. Table 2 of ASTM Standard D 2234 provides more information about sample size.

4.8.2.2 Sample Collection. ASTM D 2234 provides guidance on sample collection. The "stopped belt" technique is the preferred or reference method. Zero sampling bias should be assigned if the "stopped belt" technique is used. Using this method, a loaded conveyor is stopped, and a full cross-section cut normal to the flow stream is taken. The width of this cut should not be less than three times the top size of the solid. In many cases, however, stopped belt sampling is not practical; therefore, full-cut sampling should be used. Using full-cut sampling, the sample is taken from a full diverted cut of a moving stream. Figure 4.8-1 shows a typical "full-cut" sampling method. A "thief" probe, as shown on Fig. 4.8-2, may be used for taking a sample from a flowing stream if a full-cut sampling device is not available. A pretest run is recommended to identify and alleviate potential problems in the sampling techniques.

4.8.2.3 Handling Samples. Sampling must be carried out only under the supervision of qualified personnel. The procedure used must be developed and carefully implemented to ensure that representative samples are obtained and to prevent contamination in sampling devices and storage containers. Samples collected outdoors must be protected from external environmental influences during collection. Airtight, noncorrosive storage containers prevent degradation of the sample until it is analyzed. Each sample should be sealed immediately after being taken. Samples should not be mixed in open air prior to analysis for moisture because of the potential for moisture loss.

Samples must be properly labeled and described in terms of their significance to the test. The label should include, as a minimum, the date, time, location, and type of sample taken.

ASTM Standards D 2013 and D 3302 should be followed in the preparation of coal samples. Sorbent analysis procedures are addressed by ASTM D 25.

4.8.3 Bias for Solid Fuel and Sorbent Sampling. When the bias of a sampling procedure is estimated, the test engineer should consider the following potential sources. There may be other sources, and not all sources listed are applicable to all measurements:

- sampling location/geometry
- probe design
- stratification of flowing stream
- number and location of sample points
- ambient conditions at sample location
- fuel/sorbent variability
- fuel/sorbent size
- sample handling/storage
- duration of test
- quantity of sample obtained

An estimate of the bias from a sample is a combination of bias limits from sample acquisition, location, and stream consistency.

Sampling methods other than those recommended must be assigned higher biases.

Before conducting a performance test, it is mandatory that parties to the test make a pretest inspection of the sampling locations, identify the sampling methodology, and make the sampling probes available. Careful attention should be paid to areas where samples might not be representative. Sampling of coal and other solid materials from a moving stream can result in more of one size range of particles during collection. If systematic (bias) errors are present in the sampling system, the errors must be corrected, or the parties must assign conservative (higher) bias limits.

4.8.4 Type of Samples. Coal or sorbent samples may be individual, partial-composite, or full-composite

Copyright ASME International
Provided by IHS under license with ASME
No reproduction or networking permitted without license from IHS
Not for Resale

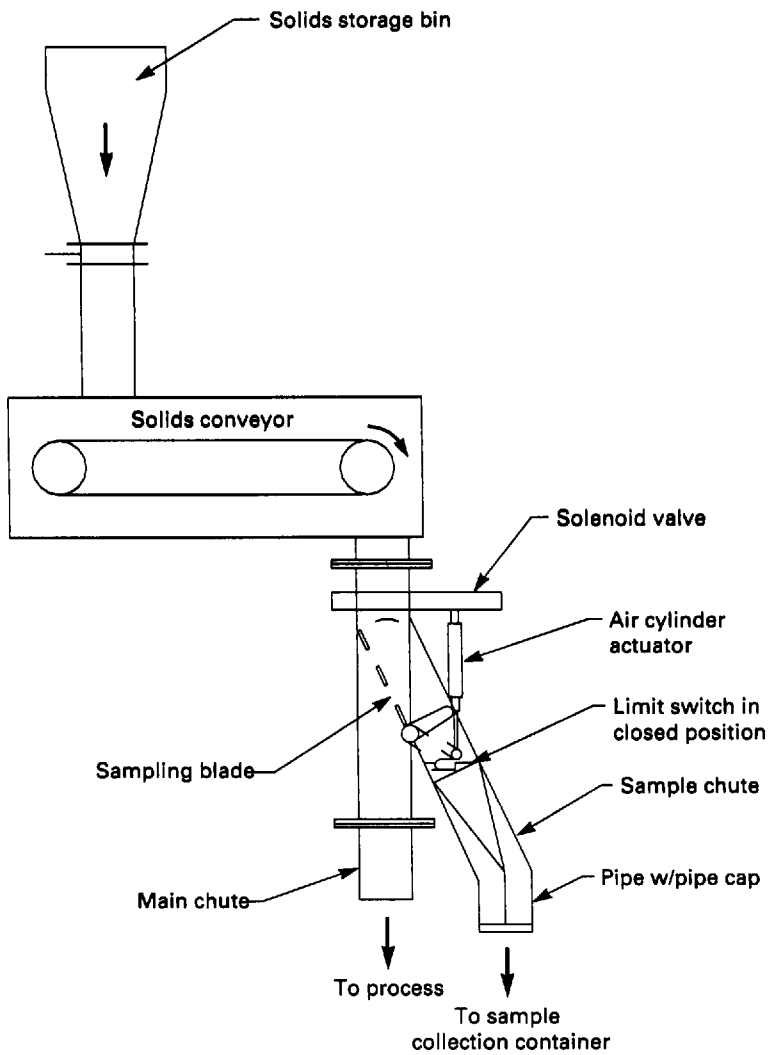

There are five methods for obtaining sample.

(1) Close isolation gate on dust suppression system. This will eliminate fines removal.
(2) Initiate sample diverter gate to sample position. This is done pneumatically.
(3) Adjust timer to obtain a proper sample size.
(4) Throw away the first sample.
(5) Collect 5 gallon bucket and seal container. Prepare for riffling, crush, and size.

FIG. 4.8-1 FULL-CUT SOLIDS SAMPLING METHOD

Copyright ASME International
Provided by IHS under license with ASME
No reproduction or networking permitted without license from IHS
Not for Resale

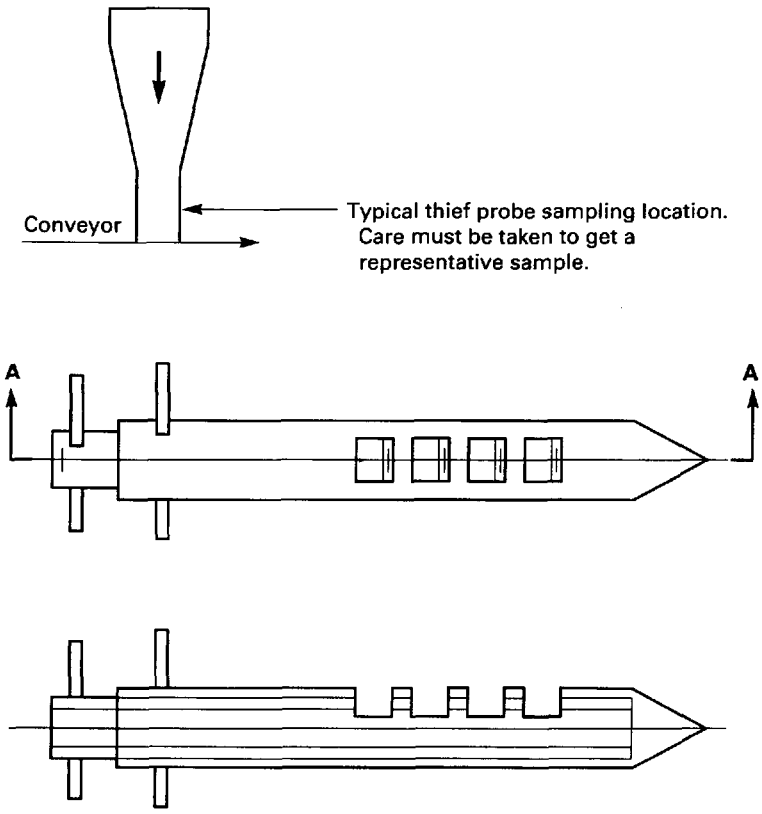

DESIGN:
Consists of two concentric pipes with the same sample hole configuration. The probe is inserted into a flowing solids stream with the sample ports closed. (The inner tube rotates 180 deg relative to the outer tube from the sample position.) The inner tube is rotated to align the sample holes and is rotated back with the inner tube now full of material.

FIG. 4.8-2 TYPICAL "THIEF" PROBE FOR SOLIDS SAMPLING ON A SOLIDS STREAM

Copyright ASME International
Provided by IHS under license with ASME
No reproduction or networking permitted without license from IHS
Not for Resale

samples. Residue samples other than for fly ash should be individual samples. Fly ash samples are covered in Section 4.11.

4.8.4.1 Individual Samples. Separate analysis samples are prepared from individual samples, referred to as "increments" in the terminology of ASTM D 2234, Standard Methods for Collection of a Gross Sample of Coal. The analysis samples are individually analyzed for the applicable constituents, heating value, carbon content, moisture, etc. The average value and precision index of each constituent are calculated using Eqs. (5.2-1) and (5.2-10). This procedure must be used when there are no historical data available to estimate the precision index of the samples.

4.8.4.2 Partial-Composite Samples. This is an alternative to analyzing individual samples, predicated on the availability of valid historical data. The objective is to reduce laboratory costs. The constituents are grouped into "composite" (e.g., carbon, hydrogen, and nitrogen) and "variable" (e.g., water, ash, and possibly sulfur) constituents. The precision indices of the "composite" constituents are taken from valid historical data. The precision indices of the "variable" constituents are based on individual analysis made for the specific test.

The underlying premise for this alternative is that "composite" constituents for both the historical and test data are from the same statistical population. As the constituents are from the same population, a precision index derived from historical data may be used for the test uncertainty analysis. Subsection 7.4.1.4 provides additional background for this alternative.

To simplify this discussion, coal constituents and terminology are used; sorbent constituents and terminology can be substituted as appropriate.

As coal is typically stored outdoors, the moisture content of as-fired coal may have greater variability than as-received coal. This increased variability may invalidate the premise that the historical as-received data and the test data are from the same statistical population. However, changes in moisture content do not affect constituents on a dry-and-ash-free basis. Where sulfur retention is an important consideration in the test, sulfur content should be included in the variable constituents. The variability of sulfur content is often relatively large.

This alternative is not suitable for residue samples. The composition of residue is affected by operating conditions within the steam generator. There is no simple way to ensure that historical and test data for residue would be from the same statistical population.

Historical data should satisfy the following criteria to be valid for estimating precision:

- the historical and test coal (sorbent) are from the same mine/quarry and seam
- historical data are the analyses of individual (not mixed) sample increments for the coal (sorbent)
- the historical and test samples are collected and prepared in accordance with ASTM Standards D 2234, Test Methods for Collection of a Gross Sample of Coal, and D 2013, Method of Preparing Coal Sample for Analysis
- the types of increments of the historical data and the test data are ASTM D 2234 Type 1, Condition A (Stopped-Belt Cut) or Condition B (Full-Stream Cut), with systematic spacing
- the size of the historical samples is the same as the size of the samples collected during the test

If the historical samples were taken at a different location, an additional bias likely has been introduced.

Two sets of individual analysis samples are prepared. One set is individually analyzed for the variable constituents, such as ash and moisture. The average value and precision index of each variable constituent are calculated using Eqs. (5.2-1) and (5.2-10).

The second set of individual analysis samples is thoroughly mixed and analyzed for the composite constituents. The average value of each variable constituent is the measured value of the mixed analysis sample.

The historical analyses are converted to the dry-and-ash-free (daf) basis by multiplying the as-received percentages (other than the variable constituents, ash and moisture) by

$$\frac{100}{100 - MpH_2OF_i - MpAsF_i} \tag{4.8-1}$$

where

MpH_2OF_i = moisture content, in percent, of historical sample increment i

$MpAsF_i$ = ash content, in percent, of historical sample increment i

For carbon content, the conversion equation is

$$MpCFdaf_i = MpCF_i \left(\frac{100}{100 - MpH_2OF_i - MpASF_i} \right) \tag{4.8-2}$$

where

$MpCF_i$ = carbon content of the fuel in percent, as-fired basis

$MpCFdaf_i$ = carbon content of the fuel in percent, dry-and-ash-free basis

Copyright ASME International
Provided by IHS under license with ASME
No reproduction or networking permitted without license from IHS
Not for Resale

MpH_2OF_i = moisture content of the fuel in percent, as-fired basis (average of test analysis)

$MpAsF_i$ = ash content of the fuel in percent, as-fired basis (average of test analysis)

The conversion equations for heating value, hydrogen, nitrogen, sulfur, and oxygen are similar. ASTM D 3180 addresses the conversion of analysis from one basis to another and should be used.

Using the dry-and-ash-free values of the individual historical samples, estimate the maximum probable standard deviation, s_{oj}, of each composite constituent. Use Appendix A2, Method of Estimating the Overall Variance for Increments, of ASTM D 2234 to determine s_{oj}.

The use of this Appendix requires for each composite constituent 20 or more analyses of individual increments. If fewer than 20 are available, calculate the standard deviation, $STDDEV_j$, of each composite constituent using Eq. (5.2-11).

The precision index for each composite constituent, PI_j, is for 20 or more analyses:

$$PI_j = \frac{s_{oj}}{\sqrt{N}} \qquad (4.8\text{-}3)$$

or for less than 20 use:

$$PI_j = \left(\frac{F_{n-1,\infty} * STDDEV_j^2}{N}\right)^{1/2} \qquad (4.8\text{-}4)$$

where

$F_{n-1,\infty}$ = the upper 5% point of the F distribution for $n - 1$ and ∞ degrees of freedom. Table 4.8-1 provides selected values of the distribution

n = the number of sample increments in the historical data

N = the number of sample increments taken during the test

The degrees of freedom of this precision index are infinite.

4.8.4.3 Full-Composite Samples. This is also an alternative to analyzing individual samples. For full-composite samples, none of the constituents are classified as variable constituents. This alternative may be applicable for sorbents and coal when historical data are available and changes in moisture or ash content are either very small or of minor concern.

A composite analysis sample is prepared from the samples taken during the test and analyzed for all constituents. The average value of each constituent is the measured value of the mixed analysis sample.

The criteria and calculations given above for partial-composite samples are applicable to full-composite samples except that the conversion factor (4.8-1) and Eq. (4.8-2) are excluded.

4.8.4.4 Systematic Sampling. With one exception, the samples shall be collected at uniform, not random, intervals. The exception is when it is known that the collection sequence corresponds with "highs" or "lows" in the fines content. In that instance, random time intervals should be used. Each sample should be of the same weight. The elapsed time to collect all coal samples must equal the duration of the test run.

4.8.4.5 Number of Samples. The number of samples to take during a test can be set by trial and error using the precision indices of the constituents. The preferred method uses a complete pretest uncertainty analysis, as discussed in Section 7.3. The number of samples is varied parametrically. A number of samples is selected such that the target test uncertainty can be met.

TABLE 4.8-1
F DISTRIBUTION

$n-1$	F_{n-1}
1	3.8415
2	2.9957
3	2.6049
4	2.3719
5	2.2141
6	2.0896
7	2.0096
8	1.9384
9	1.8799
10	1.8307
12	1.7522
15	1.6664
20	1.5705
40	1.3940
120	1.2214
Infinity	1.0000

Copyright ASME International
Provided by IHS under license with ASME
No reproduction or networking permitted without license from IHS Not for Resale

An alternative method is to examine the direct effect of changing the number of samples on the precision index of a resultant. The result may be steam generator efficiency, a heat credit or loss, or the value of the constituent. A heat credit or loss is a way of highlighting the effect of a constituent. For example, the carbon content of residue has a primary effect on the unburned carbon loss and relatively lower effect on efficiency. The contribution of constituent j to the precision index of a resultant PI_{Rj} is

$$PI_{Rj} = {}_R\Theta_j * PI_j \qquad (4.8\text{-}5)$$

where

${}_R\Theta_j$ = the absolute sensitivity coefficient of constituent i on resultant R

The absolute sensitivity coefficients are obtained from a sensitivity analysis, as detailed in Sections 5 and 7.

When the test samples are to be individually analyzed, the standard deviation used to set the number of samples is estimated. Several possible sources of data for estimating the standard deviation are the following:

- prior individual analysis
- the maximum and minimum values of the constituent. If the data are from analysis of sample increments, an approximation of the standard deviation is to divide the range by six.
- if the data for the ranges are from composite samples, an approximation of the standard deviation is to divide the range by three

When composite samples are to be analyzed for the test, the precision indices described above are used.

4.9 LIQUID AND GASEOUS FUEL SAMPLING

4.9.1 General. A representative sample of the fuel fired during the performance test should be obtained using the methods described in ASTM D 4057 or D 5287. Fuel oil and natural gas typically have more consistent composition than coal or other solid fuels, and therefore require fewer samples. If fuel properties may vary because of outside factors, such as changing source of fuel, a more rigorous sampling program will be required to ensure representative samples.

4.9.2 Bias for Liquid or Gas Sampling. The bias of liquid or gas sampling is similar to the bias of solid fuel and sorbent sampling. See Subsection 4.8.3 for potential sources of bias for liquid or gas sampling.

4.9.3 Methods of Liquid or Gas Sampling. PTC 3.1, Diesel and Burner Fuels, and GPA Standard 2166, Method of Obtaining Natural Gas Samples for Analysis by Gas Chromatography, should be consulted for the proper procedures and equipment for sampling liquid or gas. The type of sample vessel and procedure is illustrated for various cases and types of liquid fuels in PTC 3.1.

An estimate of the bias from a sample is a combination of bias limits from sample acquisition, location, and stream consistency.

4.10 SAMPLING OF FLUE GAS

4.10.1 General. Flue gas flowing through a duct has nonuniform composition distribution. In a plane across the flowing flue gas, this variation in composition or stratification also changes with time because of slight changes in fuel and air flow. The goal of flue gas sampling is to obtain the integrated average in both time and space across that plane of the flue gas composition. This is accomplished by repeatedly sampling a number of representative points in a cross section of the duct.

4.10.2 Bias for Flue Gas Sampling. The bias of a flue gas sampling procedure is similar to the bias for solid fuel and sorbent sampling. Refer to Subsection 4.8.3 for potential sources of bias for flue gas sampling. An estimate of the bias from a sample is a combination of bias limits from sample acquisition, location, and stream consistency. Section 4.3 provides potential sources of these biases. If sampling procedures are performed using a composite sample, the bias error due to spatial nonuniformity may be estimated by making individual measurements at the grid sampling points and computing the spatial distribution index according to Subsection 5.16.4. A sampling system which operates at subatmospheric pressure has a potential for in-leakage which will result in a one-sided bias. If the flue gas is severely stratified, the possibility of bias is increased.

4.10.3 Methods of Flue Gas Sampling. Multiple points in the sampling plane shall be sampled to compensate for stratification and to obtain a representative sample. The flue gas samples must be taken from the same measurement points used for temperature determination. The number of sampling points is chosen as described in Subsection 4.4.3. To minimize the uncertainty, the individual sample points should be combined to form a composite sample, which is then continuously analyzed during the test. The flow from each probe should be equal. Analysis at individual points can be utilized (along with using a greater bias)

Copyright ASME International
Provided by IHS under license with ASME
No reproduction or networking permitted without license from IHS
Not for Resale

when the number of points is not so large as to reduce the number of complete traverses during the test.

4.10.3.1 Sample Collection and Transport. The flue gas should be collected from a sampling grid, and combined into a single sample for each duct or location. The layout of points in the grid must be the same as temperature points described in Subsection 4.4.3.1. The sampling rate from each probe must remain equal, and the system must be checked for leaks prior to and throughout the test.

Large numbers of grid points are not required for SO_2 and total hydrocarbons (THC). These samples require heated sample lines and, therefore, a large number of points is impractical. The parties to the test shall agree on sampling procedures for these two gases. It should be noted that filtering the sample may cause a bias for SO_2 if CaO is present in the particulate filter. CaO reacts with the SO_2 and reduces it. In this case the filters should be cleaned frequently.

4.11 RESIDUE SAMPLING

Those fuels which contain ash necessitate a sample of the various streams leaving the unit containing the ash. These streams typically include fly ash and bottom ash. Obtaining representative samples from each of these streams is a difficult task. Fly ash may be collected in several hoppers as the flue gas makes its way to the stack. The heaviest particles fall out first, with the smaller particles being removed by mechanical forces resulting from the turning of the gas stream. Unfortunately, the carbon is not uniformly distributed throughout the particle size range. The relative distribution of the ash into the various hoppers is also not accurately known. The best method for obtaining a representative fly ash sample is to isokinetically sample the ash in the flue gas upstream of as many ash collection hoppers as possible. This usually means at the economizer outlet. This obtains a sample which has a representative cross section of particle size and carbon content. It also ensures that the sample is representative of the testing period.

The bottom ash also presents challenges in the form of large chunks and poor distribution. A number of samples and several analyses of each sample may be required to obtain representative results. A single sample may contain a chunk of coal not typically found in other samples or may have no carbon content.

4.11.1 General. Fly ash may be sampled isokinetically as particulate by drawing a flue gas sample through a filter and weighing the amount of particulate gathered on the filter. The weight of the sample and the flue gas volume recorded during this process determine the particulate concentration in the flue gas stream. To avoid altering the concentration of the gas stream, the velocity of the stream entering the sample nozzle must equal the velocity of gas at that point in the duct. This process is known as isokinetic sampling. Multiple points are sampled in the testing plane to compensate for nonuniform velocity distributions and stratification of the particulate concentration.

4.11.2 Bias for Residue Sampling. Isokinetic sampling is the reference method prescribed by this Code. The bias associated with this method is assumed to be zero. There is still an associated bias for the ash collected in the bottom ash as well as any hoppers located upstream of the fly ash collection point. If multiple samples are analyzed using multiple analysis for the bottom ash, an estimate of the associated bias can be made from this information. The procedure should also be reviewed to determine if other sources of bias may also be present.

4.11.3 Methods of Sampling Fly Ash. All apparatus and test procedures shall be in accordance with either PTC 38, Determination of the Concentration of Particulate Matter in a Gas Stream, or US EPA Reference Method 17 as described below:

- PTC 38. The particulate sampling train generally consists of a nozzle, probe, filter, condenser, dry gas meter, orifice meter, and vacuum pump or aspirator. PTC 38 illustrates different configurations of sampling trains, and should be consulted for the type of train to be used on specific installations.
- US EPA Method 17. The US Environmental Protection Agency has established two methods for particulate sampling. These reference Methods 5 and 17 are similar except that Method 17 uses an in-stack filter, whereas Method 5 uses an external filter. Method 17 is preferred since all of the particulate catch remains in the filter holder. Method 5 requires an acetone wash of the probe assembly, which may not be suitable for analysis for carbon. Detailed procedures for these methods are contained in 40CFR60 Appendix A.

Isokinetic sampling of the flue gas is both the reference and the preferred method for sampling fly ash. The number of grid points on the traverse sampling plane must be in accordance with PTC 38, Determination of the Concentration of Particulate Matter in a Gas Stream.

4.11.4 Methods of Sampling Bottom Ash. For a bottom ash sluice stream, the preferred method of sample collection is to take the sample with a multiholed

Copyright ASME International
Provided by IHS under license with ASME
No reproduction or networking permitted without license from IHS Not for Resale

probe extending the width of the sluice stream. Pages 2-3, 2-4, and 2-5 of EPRI Report EA-3610 illustrate a multihole probe. Alternatively a portion of the sluice stream may be diverted to a collection device where the ash is allowed to settle and a sample then taken.

4.11.5 Other Residue Streams. In some cases, the parties to the test may decide not to sample from a residue stream that does not contribute significantly to the energy loss. Possible examples of such streams are air heater disposal drains or vent lines, where the flow rate is negligible, or bottom ash drains, which may have insignificant sensible heat and unburned combustible losses. Alternatively, samples of bottom ash sluiced to a settling pond can yield a result which is no more certain than using an assumed value. If a solid stream is not sampled, the appropriate bias limit shall be assigned and the historical evidence documented in the final report.

4.12 FUEL, SORBENT, AND RESIDUE ANALYSIS

4.12.1 General. It is the intent of this Code that the samples be analyzed in accordance with the latest methods and procedures. When choosing a laboratory, the parties to the test should choose a certified laboratory.

4.12.2 Bias for Fuel, Sorbent, and Residue Analysis. ASTM provides guidelines for typical lab to lab reproducibility. These values are listed in Tables 4.3-2 to 4.3-5 for use in estimating the bias of a sample analysis. In general, the bias limit is taken as one-half the reproducibility.

4.12.3 Methods of Fuel, Sorbent, and Residue Analysis

4.12.3.1 Solid Fuels. For solid fuel fired steam generators, the minimum fuel information required to determine efficiency is the ultimate analysis, proximate analysis, and the higher heating value. Tables 4.3-2 to 4.3-5 identify the ASTM procedures to be used for analysis. ASTM D 3180 defines the procedures for converting the analysis from one basis to another. The latest versions of these procedures shall be utilized. If ASTM adds a new or revised procedure which is agreeable to both parties to the test, that procedure may be used.

The determination of other solid fuel qualities such as fusion temperature, free swelling index, grindability, ash chemistry, and fuel sizing are important to judge the equivalence of the test fuel and the specified fuel and may be required for other test objectives. Appendix E, Coal Properties, offers additional information.

4.12.3.2 Sorbent and Other Additives. The minimum information needed to determine the sulfur capture and efficiency is the sorbent ultimate analysis (calcium, magnesium, moisture, and inert). The determination of other solid sorbent qualities such as sorbent sizing may be required, depending on the objectives of the particular test.

4.12.3.3 Liquid Fuel. For liquid fuel fired steam generators, the minimum fuel information needed to determine efficiency is the ultimate analysis and higher heating value of the fuel. The determination of other liquid fuel qualities such as API Gravity and density may be required depending on the objectives of the test. The procedures for these determinations are found in ASTM D 1298.

4.12.3.4 Gaseous Fuel. For gaseous fuel fired steam generators, the minimum fuel information needed to determine efficiency is the constituent volumetric analysis of the fuel. ASTM D 1945 is used for this determination. This analysis is converted to an elemental mass analysis as detailed in Subsection 5.8.2. Higher heating value may be determined by a continuous online calorimeter as defined in ASTM D 1826. The parties to the test shall agree on which method will be used.

4.12.3.5 Residue. Particulate residue samples shall be analyzed for total carbon content according to ASTM D 5373, Instrumental Method, or equivalent, and corrected for carbon dioxide as determined in accordance with ASTM D 1756. Use of a loss on ignition (LOI) analysis is not permitted for the determination of unburned combustible loss, because several reactions may occur in the combustion process which reduce or increase the weight of the sample and which have no heating value.

The test for total carbon in the residue includes the determination of hydrogen, and the hydrogen result may be reported in addition to the carbon. This portion of the test is not mandatory for testing carbon in residue, and experience indicates that H_2 in fuel volatilizes readily and no significant quantity of H_2 exists in residue in the normal combustion process. This test may result in a measured hydrogen content on the order of 0.1% or less. Hydrogen quantities of this order of magnitude should be considered as zero in the combustion and efficiency calculations. A potential source for error in the determination of free hydrogen is that, as with carbon, this test method yields the total percentage of hydrogen in the residue as analyzed and the results present the hydrogen present in the free

Copyright ASME International
Provided by IHS under license with ASME
No reproduction or networking permitted without license from IHS
Not for Resale

moisture accompanying the sample as well as hydrogen present as water of hydration of silicates or calcium oxide [$Ca(OH)_2$].

4.13 FLUE GAS ANALYSIS

4.13.1 General. It is the intent of this Code that the samples be analyzed in accordance with the latest methods and procedures.

4.13.2 Bias for Flue Gas Analysis. A number of factors need to be considered in determining the bias of a flue gas analysis system. Some of the potential sources of bias for the flue gas system are the following:

- analyzer accuracy
- sampling system interference
- analyzer drift
- spatial variation
- time variation
- cal gas accuracy
- sample temperature and pressure influence on analyzer
- undetected leaks
- interference gases
- ambient temperature influence on analyzer
- sample moisture influence on analyzer
- accuracy of dilution ratio, if used

4.13.3 Methods of Flue Gas Analysis. The following Subsections describe methods and equipment operation for measurement of flue gas oxygen (O_2), carbon monoxide (CO), sulfur dioxide (SO_2), oxides of nitrogen (NO_x), and total hydrocarbons (THC).

The equipment needed to conduct a flue gas analysis by extractive sampling is composed of two parts: the sample collection and transport system and flue gas analyzers. The sample collection and transport system is composed of a grid of probes, sample lines, flue gas mixing device, filter, condenser or gas dryer, and pump. The flue gas analyzers each measure a particular flue gas constituent. Since an extractive sample removes water vapor from the sample prior to analysis, this type of analysis is on a dry basis. A nonextractive or "in situ" analysis produces results on a wet basis. Flue gas constituents are analyzed on a volumetric or molar basis, in which the moles of the constituent of interest are divided by the total moles present. The difference between the wet and dry basis is that the wet basis includes both the dry moles and water vapor moles in the denominator.

4.13.4 Flue Gas Analysis. The types of analyzers currently in use are continuous electronic analyzers and manual instruments such as the Orsat analyzer. Although manual instruments are permitted, operator skill, chemical freshness, and other factors related to manual instruments contribute to potentially high biases. In addition, it is recommended that flue gas composition be monitored on a continuous basis throughout the test. Fuel variations, control system tuning, and other factors cause variations in flue gas constituents. Therefore, a continuously analyzed composite sample taken from a representative grid best represents the true average gas composition.

4.13.4.1 Oxygen. Several methods are employed to measure oxygen; among them are paramagnetic, electrochemical cell, fuel cell, and zirconium oxide. The test engineer must ensure that the method selected is appropriate for the application employed. When an electrochemical cell is being used, care must be taken to ensure that other gases such as CO_2 do not interfere with the oxygen measurement. An interfering gas in the calibration gas of the approximate concentration found in the flue gas can be used to minimize the error.

4.13.4.2 Carbon Monoxide. The most common method for carbon monoxide analysis is nondispersive infrared. The main disadvantage of this methodology is that CO, CO_2, and H_2O all have similar infrared wavelength absorption. For accurate CO readings, the sample must be dry and the analyzer must compensate for CO_2 interference. Better quality instruments determine CO_2, then compensate CO for that value; others use a preset CO_2 interference factor. For determining heat loss due to CO, the inaccuracy resulting from neglecting CO_2 (approximately 20 ppm) is minimal. However, an overestimate of 20 ppm may be significant in relation to environmental protection regulations.

4.13.4.3 Sulfur Dioxide. The analysis of sulfur dioxide (SO_2) is typically performed using one of two accepted methods: pulsed fluorescent or ultraviolet. SO_2 is very reactive, and only glass, stainless steel, or teflon can be used in the sampling and analysis system.

4.13.4.4 Oxides of Nitrogen. Chemiluminescent analyzers are the preferred method of analysis. These analyzers first convert NO_2 to NO in a thermal converter, then mix the NO with ozone (O_3) and produce NO_2 in the reaction chamber. This reaction process emits light, which is measured to determine the concentration of NO_2. Even though NO_2 represents a very small percentage of the NO_x emissions (typically less than 5%), NO_x is reported as NO_2. This has negligible effect on steam generator efficiency.

4.13.4.5 Total Hydrocarbons. Total hydrocarbons (THC) measurement by flame ionization detector (FID)

Copyright ASME International
Provided by IHS under license with ASME
No reproduction or networking permitted without license from IHS
Not for Resale

based instrument is the preferred method. Either methane or propane should be used for calibration and the resulting THC value reported as THC ppm methane or THC ppm propane.

4.14 ELECTRIC POWER

4.14.1 General. The accurate measurement of three-phase power is a complex issue. Fortunately, highly accurate electrical measurement is of minor importance for determining steam generator efficiency. If power measurements are used to determine auxiliary power consumption a more exhaustive procedure should be used. The best approach is to measure the current and voltage in each phase of the circuit and sum the power in each phase to determine the total. In practice this is difficult and costly.

4.14.2 Bias for Electrical Power Measurement. When estimating the bias of an electric power measurement, test personnel should consider the following list of potential sources. Not all sources are listed, and some of those listed may not be applicable to all measurements:

- current transformer (CT) accuracy
- potential transformer (PT) accuracy
- power factor on each phase
- wattmeter accuracy
- load imbalance
- frequency of sampling

4.14.3 Method of Measurement. For the measurement of electrical power for steam generator efficiency, measurement of a single phase current and voltage along with the assumption of balanced load for the auxiliaries is sufficiently accurate. Should a highly accurate determination of auxiliary power be required for other purposes, the determination shall be made in accordance with the 2 wattmeter or 3 wattmeter methods. IEEE 120 should be consulted for methods to use in making electrical power measurements.

4.14.4 Estimating Bias. An estimate of the bias from an electrical measurement is a combination of bias limits from primary sensor type, wattmeter, and data acquisition. Section 4.3 and Subsection 4.14.2 provide potential sources of these biases. The uncertainty of protection CTs is typically ±10 to 20%. Measurement CTs vary but usually have uncertainty in the range of 1 to 5%. These CTs are used to send a signal to the operator. Usually only one phase uses a measurement CT and the assumption is made that the power used on the other two phases is the same (balanced load). This assumption is not necessarily accurate due in part to varying power factors.

4.15 HUMIDITY

4.15.1 General. The moisture carried by the entering air must be taken into consideration in calculations of steam generator efficiency.

4.15.2 Bias for Humidity Measurement. When estimating the bias of a humidity measurement, test personnel should consider the following potential sources. Not all sources are listed, and some of those listed may not be applicable to all measurements:

- hygrometer
- wet/dry bulb thermometer type
- calibration
- drift
- thermometer nonlinearity
- parallax

4.15.3 Method of Measurement. The dry-bulb and wet-bulb temperatures should be determined at the atmospheric air inlet to the unit. Since the specific humidity does not change with heat addition unless there is a moisture addition, the specific humidity of the combustion air leaving the air heater is the same as the specific humidity entering. To determine specific humidity, either dry-bulb and wet-bulb, or dry-bulb and relative humidity, are needed. Subsection 5.11.2 addresses absolute or specific humidity (pounds of moisture per pound of dry air). The moisture may be determined with the aid of a sling type psychrometer, hygrometer with temperature or similar device, and an observed barometric pressure reading.

Copyright ASME International
Provided by IHS under license with ASME
No reproduction or networking permitted without license from IHS
Not for Resale

SECTION 5 — COMPUTATION OF RESULTS

5.1 INTRODUCTION

This Section describes the data required and the computation procedures for determining the performance of steam generators covered by this Code. Data acquisition principles, instruments, and methods of measurement are given in Sections 3 and 4. Derivations of certain equations are detailed in Appendix C.

The computation equations use acronyms for variables which consist of alphanumeric characters that may be used directly in computer programs without loss of interpretation. The format for these acronyms, definition of letters or letter combinations, and a summary of developed acronyms are described in Section 5.20. The alphanumerical designations which identify the locations of gaseous, liquid, and solid streams in relation to the steam generator components are listed on the Steam Generator Boundary Data Identification List in Section 1 and shown schematically on Figs. 1.4-1 through 1.4-7.

This Section is generally arranged in the sequence required to compute steam generator performance after completion of a test. The test measurements recorded during a performance test must be reduced to average values before performance and uncertainty calculations are completed. Section 5.2 provides guidance for reducing test measurements to average values. Section 5.2 also presents the equations to determine the precision index for uncertainty analysis calculations. Sections 5.3 through 5.15 present the equations to determine steam generator performance. Section 5.16 presents the equations to determine the bias component of the uncertainty and the remaining equations required to complete the test uncertainty analysis. Sections 5.17 through 5.19 present guidance for determining other operating parameters, corrections to standard or guarantee conditions, and enthalpy calculations.

5.2 MEASUREMENT DATA REDUCTION

5.2.1 Calibration Corrections. When an instrument has been calibrated, the calibration correction should be applied prior to data reduction. An example is a pressure transducer for which an actual pressure versus output reading (e.g., mv output) has been determined statistically via laboratory measurements. Similarly, an error correlation versus mv determined for a thermocouple in a laboratory should be applied to the measured result prior to averaging.

In this same category is any dependent variable, which is a result of multiple measurements. Measurement of fluid flow is a common example. The flow result is a square root function of differential pressure and approximately linear function of temperature and pressure. The calculated result should be used in the data average. The bias and precision error of the instruments required to determine flow should be incorporated in the total precision and bias uncertainty of the measured flow parameter (refer to sensitivity coefficient in Section 5.16).

5.2.2 Outliers. The first step in determining the average value for a measurement is to reject bad data points or outliers. Outliers are spurious data that are believed to be not valid and should not be included as part of the calculations and uncertainty analyses. Causes of outliers are human errors in reading and writing values and instrument errors resulting from electrical interference, etc. Several documents provide guidance and statistical methods for determining outliers; among them are ASME PTC 19.1 and ASTM E178. This Code does not recommend a particular statistical method for determining outliers. It is important to note that the use of statistical methods to determine outliers can produce unrealistic results depending on the method and criteria used. Most outliers are obvious when all data recorded for a given parameter are compared. The rejection of outliers based on engineering judgment and/or pretest agreements by the parties involved in the test is recommended. It is also recommended that the test engineer and all parties involved determine the likely cause of any outliers.

5.2.3 Averaging Test Measurement Data. The average value of a parameter measured during a performance test is determined before or after the rejection of outliers. The average value can provide important information which can be used to determine outliers. If the average value is calculated before determining outliers, it must be recalculated after all outliers are rejected.

Parameters measured during a performance test can vary with respect to time and spatial location. The

Previous Page is Blank

Copyright ASME International
Provided by IHS under license with ASME
No reproduction or networking permitted without license from IHS
Not for Resale

majority can be averaged on the basis that the parameter has perturbations about a constant value. This includes any parameter measured at a single point to determine the value such as steam temperature or pressure. During a steady-state performance test (as defined in Section 3), some single-point parameters may exhibit time dependency. However, for purposes of this Code, such parameters are assumed to have a constant value equal to the arithmetic average.

However, some parameters, measured during a test run, must be considered with respect to space as well as time (i.e., parameters which are not uniform within a plane perpendicular to the direction of flow). This would include any measured parameter determined from more than one point at a given location. Air heater flue gas outlet temperature measurements using a grid of thermocouples is a typical example. Parameters which vary with space as well as time are averaged differently from parameters which vary only with time.

The average value of the parameters, along with their standard deviations of the mean and degrees of freedom, are used to calculate the overall precision uncertainty.

5.2.3.1 Average Value for Spatially Uniform Parameters.[1] The average value of a parameter that is not expected to exhibit spatial variations is calculated by averaging readings taken over time.

For parameters modeled as constant in/over space (e.g., feedwater temperature or pressure), or values of a parameter at a fixed point in space (e.g., exit flue gas temperature at one point in the thermocouple grid), the equation used to calculate average values is:

$$XAVE = \frac{1}{n}(x_1 + x_2 + x_3 + \ldots + x_n) = \frac{1}{n}\sum_{i=1}^{n} x_i \qquad (5.2\text{-}1)$$

where

$XAVE$ = arithmetic average value of a measured parameter

x_i = value of measured parameter i at any point in time

n = number of times parameter x is measured

[1] Some parameters measured at a single point in space may exhibit a time dependency, e.g., combustion air temperature due to ambient air temperature changes. This Code recommends the use of Eq. (5.2-1) to calculate the average value of such parameters and increasing the number of readings to reduce the precision index. However, at the option of the parties to the test, a polynomial may be fitted to the data for a fixed point in space. If a curve fit is utilized, the user must (1) statistically validate the model; (2) mathematically integrate the fitted curve to determine the average value of the parameter; and (3) develop the method for calculating the variance of the average value for determining the precision index.

5.2.3.2 Summary Data. It is common for data acquisition systems to print out (and store on electronic media) average values and standard deviations for measured parameters several times during a test period. These are called summary data. The total set of measurements for a test consists of m sets of measurements. Each set has n readings. The average value, $XAVE_k$, for set k is given by Eq. (5.2-1) with the addition of a subscript to denote the set. The overall average value of such parameters is:

$$XAVE = \frac{1}{m}\sum_{k=1}^{m} XAVE_k \qquad (5.2\text{-}2)$$

Summary data can only be used if individual measured parameter data and standard deviation information are available for each set of measurements. If this information is not available, the subsets should be treated as individual samples.

5.2.3.3 Average Value for Spatially Nonuniform Average Parameters. The average value of parameters having spatial variations can be determined using numerical integration methods. This Code recognizes three methods for this calculation:

- multiple midpoint
- triple midpoint
- composite midpoint

Numerical integration methods are used to average the spatial variations of a parameter. First, the average value at each grid point is determined using either Eq. (5.2-1) or (5.2-2). Next, if the parties to the test agree to use weighted averages, the individual point averages are multiplied by a weighting factor,

$$X_{iw} = F_i X_i \qquad (5.2\text{-}3)$$

where

X_i = arithmetic average value of parameter at measurement point i

[NOTE: If X_i is temperature, it must be in absolute terms]

X_{iw} = weighted average value of parameter at measurement point i

F_i = weighting factor for point i

This Code uses only one type of weighting factor: velocity.

The individual weighting factor is:

Copyright ASME International
Provided by IHS under license with ASME
No reproduction or networking permitted without license from IHS
Not for Resale

$$F_i = \frac{V_i}{\overline{V}} \qquad (5.2\text{-}4)$$

where

V_i = velocity normal to traverse plane at measurement point i

$\overline{V}$ = average velocity at traverse plane

$$\overline{V} = \frac{1}{n}\sum_{i=1}^{n} V_i \qquad (5.2\text{-}5)$$

where

n = number of points on the traverse measuring plane

This Code does not require that integrated-average parameters be mass flow or velocity weighted. If the parameter average is not weighted, an appropriate bias must be assigned in the uncertainty analysis. Subsection 7.5.3 provides guidance for estimating the bias.

Finally, after averaging the parameter at each grid point and applying the weighting factors (if applicable), spatial averaging is computed in accordance with the following methods:

(a) Multiple Midpoint Averaging Method. The multiple midpoint is the simplest and most commonly used numerical integration method. The multiple midpoint integrated average value is the same as the arithmetic average of all individual point measurements, as shown in the following equation:

$$U = (X_{w1} + X_{w2} + X_{w3} + ... + X_{wn})/n$$

or (5.2-6)

$$U = (X_i + X_2 + X_3 + ... + X_n)/n$$

where

U = integrated average value of measured parameter

(b) Triple Midpoint Averaging Method. The triple midpoint numerical integration method can be used if the number of grid points in both the horizontal and vertical directions are multiples of three. The following is a schematic of points in a grid with the number of columns and rows being multiples of three:

0,0	0,1	0,2	0,3	. . .	$0,q-1$
1,0	1,1	1,2	1,3	. . .	$1,q-1$
2,0	2,1	2,2	2,3	. . .	$2,q-1$
. . .	. . .	. . .	. . .	. . .	. . .
$p-1,0$	$p-1,1$	$p-1,2$	$p-1,3$	. . .	$p-1,q-1$

The integrated average value of a parameter using the triple midpoint method is obtained using the following equations:

$$U = \left[\frac{9}{(64pq)}\right]\sum_{k=0}^{q-1}[3\,(Z_{3k} + Z_{3k+2}) + 2\,Z_{3k+1}] \qquad (5.2\text{-}6)$$

and

$$Z_k = \sum_{j=0}^{p-1}[3\,(U_{3j,k} + U_{3j+2,k}) + 2\,U_{3j+1,k}] \qquad (5.2\text{-}7)$$

where

p = number of rows in grid

q = number of columns in grid

$U_{p,q}$ = arithmetic (or flow/velocity weighted if applicable) average value of each row, p, and column, q, measurement point

(c) Composite Midpoint Averaging Method. The composite midpoint numerical integration method can be used if the number of grid points in either the horizontal or vertical direction are multiples of three. The integrated average value of a parameter using the composite midpoint method is obtained using the following equation:

$$U = \left[\frac{3}{(8\,p\,q)}\right]\sum_{k=0}^{q-1} Z_k \qquad (5.2\text{-}8)$$

and

$$Z_k = \sum_{j=0}^{p-1}[3\,(U_{3j,k} + U_{3j+2,k}) + 2\,U_{3j+1,k}] \qquad (5.2\text{-}9)$$

5.2.4 Precision Uncertainty. General guidelines for calculating the precision index for individual measurement parameters are given below. A more detailed description of uncertainty analysis calculations along with derivations is included in Section 7. Section 7 should be reviewed prior to beginning any uncertainty calculations. The precision component of uncertainty must be calculated using several steps. Each measured parameter has a precision index and a certain number of degrees of freedom. There is also an overall precision index and number of degrees of freedom for all measurement parameters combined. These cannot be calculated until after the steam generator performance computations shown in Sections 5.3 through 5.15 are completed. The calculation of the overall test precision index and the precision component of uncertainty are presented in Section 5.16.

Copyright ASME International
Provided by IHS under license with ASME
No reproduction or networking permitted without license from IHS
Not for Resale

The first step in determining the precision index and degrees of freedom for a measured parameter is to calculate the average value and standard deviation using the data recorded during a test. The average value, standard deviation, and degrees of freedom for a measured parameter are calculated differently for parameters which vary in both time and space and those parameters which vary only in time.

5.2.4.1 Precision Index for Spatially Uniform Parameters. For multiple measurements of a parameter which is not expected to exhibit spatial variations, the standard deviation and precision index for the parameter are calculated from:

$$PI = STDDEVMN \tag{5.2-10}$$

$$STDDEVMN = \left(\frac{STDDEV^2}{n}\right)^{1/2} = \left[\frac{1}{n\,(n-1)} \sum_{i=1}^{n} (x_i - XAVE)^2\right]^{1/2} \tag{5.2-11}$$

$$STDDEV = \left[\frac{1}{(n-1)} \sum_{i=1}^{n} (x_i - XAVE)^2\right]^{1/2} \tag{5.2-12}$$

or

$$STDDEV = \left[(PSTDDEV)^2 \frac{n}{(n-1)}\right]^{1/2} \tag{5.2-13}$$

where

PI = precision index for a measured parameter
$STDDEVMN$ = standard deviation of the mean for a measured parameter
$STDDEV$ = standard deviation estimate from the sample measurements
$PSTDDEV$ = population standard deviation for a measured parameter
n = number of times parameter is measured
x_i = value of measured parameter i at any point in time
$XAVE$ = arithmetic average value of a measured parameter

The equations are presented in the above format because some electronic calculators and spreadsheet programs calculate the population standard deviation while others calculate the sample standard deviation. Some also calculate the standard deviation of the mean. It is important that the individual calculating the precision index understands the difference between population standard deviation, sample standard deviation, and standard deviation of the mean. With the use of a computer or scientific calculator, if the function for "sample standard deviation" is used with the measured values of the parameter, the result would be *STDDEV*. If the function for "population standard deviation" is used on these values, the result would be *PSTDDEV*. If the function for standard deviation for the mean or "standard error of the mean" is used, the result would be *STDDEVMN*. An understanding of the differences will help in the use of the correct functions and formulae.

The degrees of freedom for the precision index of a spatially uniform parameter is determined from the following equation:

$$DEGFREE = n - 1 \tag{5.2-14}$$

where

$DEGFREE$ = number of degrees of freedom

For summary data (refer to Subsection 5.2.3.2), the associated standard deviation of set k is:

$$STDDEV_k = \left[\frac{1}{(n-1)} \sum_{i=1}^{n} (x_i - XAVE_k)^2\right]^{1/2} \tag{5.2-15}$$

where n is the number of measurements within each set.

The precision index is given by Eq. (5.2-10), where the standard deviation of the mean is:

$$STDDEVMN = \left(\frac{1}{m\,n\,(m\,n-1)} \sum_{k=1}^{m} ((n-1)\,STDDEV_k^2 + nXAVE_k^2) - mnXAVE^2\right)^{1/2} \tag{5.2-16}$$

where m is the number of sets of data.

The degrees of freedom for the precision index and standard deviation of the mean are:

$$DEGFREE = m\,n - 1 \tag{5.2-17}$$

The overall averages and the standard deviations of the mean of both the summary data and the total $m \cdot n$ measurements have to be the same. The model is a constant value parameter for both.

Copyright ASME International
Provided by IHS under license with ASME
No reproduction or networking permitted without license from IHS
Not for Resale

5.2.4.2 Precision Index for Spatially Nonuniform Parameters. The precision index and degrees of freedom for a parameter with spatial variations must be determined in a manner consistent with the integration methods discussed in the previous Sections and the use of weighted or unweighted averages. The most common integration method is the multiple midpoint rule, for which calculation of the precision index is as shown below. The equations used to calculate precision index and degrees of freedom with the triple midpoint and composite midpoint are presented in Section 7.

The precision index for multiple midpoint rule average is:

$$PI = \frac{1}{m}\left[\sum_{i=1}^{m} PI_i^2\right]^{1/2} \qquad (5.2\text{-}18)$$

The associated degrees of freedom are:

$$DEGFREE = \frac{PI^4}{\sum_{i=1}^{m} \frac{PI_i^4}{m^4\ DEGFREE_i}} \qquad (5.2\text{-}19)$$

where

PI = precision index for average parameter
PI_i = precision index of the parameter at point i
$DEGFREE$ = degrees of freedom for average parameter
$DEGFREE_i$ = degrees of freedom of the parameter at point i
m = number of grid points

The degrees of freedom must fall between a minimum and maximum value based on the number of readings taken at each grid point and the number of grid points. The minimum possible degrees of freedom is the smaller of the following:

- number of points in the grid, m
- number of readings taken at each grid point minus 1, $N - 1$

The maximum possible degrees of freedom is the product of the two items listed above.

Equations (5.2-18) and (5.2-19) are for unweighted averages and also for weighted averages when the weighting factors are measured simultaneously with the parameters so that the precision indexes at the grid points are calculated by using weighted parameters [$X_{FW} = F_i X_i$, see Eq. (5.2-3)]. This calculation should be used for weighted averages only when there are a large enough number of readings at each grid point to assure statistical significance.

If weighted averages are to be employed in performance calculations, with only a small number of simultaneous traverses (fewer than six), giving only a small number of readings at each point, then the precision index of the weighted average is estimated using a single probe as described in Subsection 7.4.1.3. This probe is arranged to simultaneously measure velocity and the parameter of interest (temperature or oxygen) at a fixed point. There are n readings at the single point. The readings are multiplied:

$$X_{FW,i} = \left[\frac{V_i}{VAVE}\right] X_i \qquad (5.2\text{-}20)$$

The sample standard deviation of X_{FW}, $STDDEV$, is calculated from Eq. (5.2-12) or (5.2-13). The precision index for the weighted average parameter is:

$$PI = \frac{F_{n-1,\infty} STDDEV}{N^{1/2}} \qquad (5.2\text{-}21)$$

where

n = readings at the single point
N = number of traverses
$F_{n-1,\infty}$ = F distribution as read in Table 4.8-1

The standard deviation is determined from the standard deviation of the single point. The degrees of freedom for the single point are taken as infinite; therefore, the F-distribution table is used.

If weighted averages are to be employed in performance calculations with weighting factors (velocities) determined separately from the weighted parameter, then the precision index of the weighted average parameter is calculated from:

$$PI = [PIUW^2 + (PARAVEUW - PARAVEFW)^2 \times PIV^2/VAVE^2]^{1/2} \qquad (5.2\text{-}22)$$

where

$PIUW$ = precision index of the *unweighted* average
$PARAVEUW$ = the *unweighted* average value of the parameter
$PARAVEFW$ = the *weighted* average value of the parameter
PIV = the precision index of the velocity
$VAVE$ = the average velocity

If the velocity distribution is determined by a limited number of traverses, PIV can be estimated from a large number of velocity readings taken over time at a single point, as described immediately above, with V_i used in place of $X_{FW,i}$.

Copyright ASME International
Provided by IHS under license with ASME
No reproduction or networking permitted without license from IHS
Not for Resale

5.3 CAPACITY

5.3.1 Capacity. Capacity is the maximum main steam mass flow rate the steam generator is capable of producing on a continuous basis with specified steam conditions and cycle configuration (including specified blowdown and auxiliary steam). This is also frequently referred to as maximum continuous rating (MCR).

5.3.2 Capacity, Peak. Peak capacity is the maximum main steam mass flow rate the steam generator is capable of producing with specified steam conditions and cycle configuration (including specified blowdown and auxiliary steam) for intermittent operation, i.e., for a specified period of time without affecting future operation of the unit.

5.4 OUTPUT (*QrO*), Btu/h (W)

Output is the energy absorbed by the working fluid that is not recovered within the steam generator envelope, such as energy to heat the entering air. It includes the energy added to the feedwater and desuperheating water to produce saturated/superheated steam, reheat steam, auxiliary steam (refer to Subsection 5.4.3) and blowdown. It does not include the energy supplied to preheat the entering air such as air preheater coil steam supplied by the steam generator.

The general form of the output equation is:

$$QrO = \Sigma\, MrStz2(HLvz2 - HEnz1),\ \text{Btu/h (W)} \qquad (5.4\text{-}1)$$

where

MrStz2 = mass flow rate of fluid leaving location *z2*, lbm/h (kg/s)
HLvz2 = enthalpy of fluid leaving location *z2*, Btu/lbm (J/kg)
HEnz1 = enthalpy of fluid entering location *z1*, Btu/lbm (J/kg)

5.4.1 Output in Main Steam. The output energy in main steam is the energy added to the entering high-pressure feedwater (and superheater spray water for superheat units). Refer also to auxiliary steam and blowdown, which are outputs generated from the entering high-pressure feedwater.

5.4.1.1 Saturated Steam Generators. Output in main steam is equal to the steam mass flow rate leaving the unit times the difference between the enthalpy of the steam leaving the unit and the feedwater entering the unit:

$$QrO = MrSt31(HSt31 - HW24),\ \text{Btu/h (W)} \qquad (5.4\text{-}2)$$

5.4.1.2 Superheated Steam Generators. Output in main steam is equal to the difference between the main steam and spray mass flow rates multiplied by the difference between the main steam and feedwater enthalpies and added to the spray mass flow rate multiplied by the difference between the main steam and spray water enthalpies:

$$QrO = (MrSt32 - MrW25)(HSt32 - HW24) + MrW25(HSt32 - HW25),\ \text{Btu/h (W)} \qquad (5.4\text{-}3)$$

5.4.2 Reheat Steam Generators. For reheat steam, a term for each stage of reheat must be added to the output equation. (Refer to Subsection 5.4.2.1 for the logic for determining reheat flow.) The additional output from the first-stage reheat is the reheat mass flow rate times the difference between the reheat enthalpies entering and leaving and added to the reheat spray mass flow rate times the difference between the reheat steam and reheat spray water enthalpies:

$$QRh = MrSt33(HSt34 - HSt33) + MrW26(HSt34 - HW26),\ \text{Btu/h (W)} \qquad (5.4\text{-}4)$$

5.4.2.1 Reheat Flow. For purposes of this Code, first-stage reheat flow is calculated by subtracting from the main steam flow the sum of the extraction flow(s) to feedwater heater(s), turbine shaft and seal leakages, and any other flows extracted after the main steam flow leaves the steam generator boundary and prior to returning to the reheater, and by adding reheat spray flow. The preferred method for determining extraction flow to feedwater heaters is calculated by energy balance. Turbine shaft and seal leakages may be estimated from the manufacturer's turbine heat balances or recent turbine test data. Extraction flows that cannot be calculated by energy balance must be measured, or, if minor, estimated with appropriate uncertainty factors applied.

The logic for calculating second-stage reheat flow is similar to first-stage reheat flow except the calculated first-stage reheat flow leaving the unit is used in lieu of main steam flow.

Consult PTC 6, Steam Turbines, for guidance in determining reheat flow.

5.4.3 Auxiliary Steam. Auxiliary steam includes steam which exits the steam generator envelope as well as miscellaneous steam, such as atomizing steam and

Copyright ASME International
Provided by IHS under license with ASME
No reproduction or networking permitted without license from IHS
Not for Resale

soot blowing steam, and is included in the boiler output. It does not include steam utilized to heat the entering air. For each extraction point, add the following term to the output equation:

$$QrAxSt = MrSt46A(HSt46A - HW24), \text{ Btu/h (W)} \quad (5.4\text{-}5)$$

where *MrSt46A* and *HSt46A* are the mass flow rate and enthalpy at the extraction point.

5.4.4 Blowdown. The term added to the output equation when blowdown is utilized is:

$$QrBd = MrW35(HW35 - HW24), \text{ Btu/h (W)} \quad (5.4\text{-}6)$$

5.5 INPUT

Input is the potential combustion energy. It is the maximum amount of energy available when the fuel is completely burned:

$$QrI = QrF = MrF\ HHVF, \text{ Btu/h (W)} \quad (5.5\text{-}1)$$

where

QrI = input, Btu/h (W)
QrF = input from fuel, Btu/h (W)
MrF = mass flow rate of fuel, lbm/h (kg/s)
HHVF = higher heating value of fuel, Btu/lbm (J/kg). Refer to Section 5.8.

5.6 ENERGY BALANCE

In accordance with the first law of thermodynamics, the energy balance around the steam generator envelope can be stated as:

Energy entering the system – Energy leaving the system = Accumulation energy in the system

Since a steam generator should be tested under steady-state conditions, such that accumulation is zero, the equation is:

Energy entering the system = Energy leaving the system

or

$$QEn = QLv, \text{ Btu/h (W)} \quad (5.6\text{-}1)$$

Energy entering the system is the energy associated with the entering mass flow streams and auxiliary equipment motive power. Energy leaving the system is the energy associated with the leaving mass flow streams and heat transfer to the environment from the steam generator surfaces.

Expressing the energy balance in terms that can be readily measured and calculated, Eq. (5.6-1) becomes:

$$Qrf = QrO + Qb, \text{ Btu/h (W)} \quad (5.6\text{-}2)$$

where

Qb = the energy balance closure. Energy balance closure is the net sum of the energy associated with entering and leaving mass flow streams (excluding input and output), energy due to chemical reactions that occur within the steam generator envelope, motive power energy, and radiative and convective heat transfer to the environment.

In keeping with conventional practice, energy balance closure may be divided into credits and losses:

$$Qb = QrL - QrB, \text{ Btu/h (W)} \quad (5.6\text{-}3)$$

where

QrL = losses, Btu/h (W). Losses are the net sum of energy transferred from the system (excluding external steam output) by mass flow streams leaving the envelope plus endothermic chemical reactions that occur within the steam generator envelope and radiative and convective heat transferred to the environment from envelope surfaces.

QrB = credits, Btu/h (W). Credits are the net sum of energy transferred to the system by mass flow streams entering the envelope (excluding fuel combustion energy) plus exothermic chemical reactions and motive power energy of auxiliary equipment within the steam generator envelope.

Substituting the above in Eq. (5.6-2), the overall energy balance becomes:

$$QrF + QrB = QrO + QrL, \text{ Btu/h (W)} \quad (5.6\text{-}4)$$

where

QrF + *QrB* = the total energy added to the system

Copyright ASME International
Provided by IHS under license with ASME
No reproduction or networking permitted without license from IHS
Not for Resale

5.7 EFFICIENCY

Efficiency is the ratio of energy output to energy input, expressed as a percentage:

$$EF = 100\frac{Output}{Input} = 100\frac{QrO}{QrI} \qquad (5.7\text{-}1)$$

$$= 100\frac{QrO}{QrF}, \%$$

When input (QrI) is defined as the total energy of combustion available from the fuel (QrF), the resulting efficiency is commonly referred to as fuel efficiency (EF).

Fuel efficiency is the preferred method in this Code for expressing efficiency. Another method for expressing efficiency is to consider the total energy input to the steam generator envelope ($QrF + QrB$). This is commonly referred to as gross efficiency (EGr). Appendix D addresses calculation of gross efficiency.

5.7.1 Efficiency — Energy Balance Method. In the energy balance method, the energy closure losses and credits are used to calculate efficiency. Equation (5.6-4) can be rewritten as follows:

$$QrF = QrO + QrL - QrB, \text{ Btu/h (W)} \qquad (5.7\text{-}2)$$

Thus, fuel efficiency expressed in terms of the losses and credits becomes:

$$EF = 100\frac{QrO}{QrF} = 100\frac{QrO}{QrO + QrL - QrB} \qquad (5.7\text{-}3)$$

$$= 100\frac{QrF - QrL + QrB}{QrF}, \%$$

Most losses and credits can be calculated on a percent input from fuel basis in accordance with the following equations:

$$QpL = 100\frac{QrL}{QrF} \text{ and } QpB = 100\frac{QrB}{QrF}, \% \qquad (5.7\text{-}4)$$

thus, combining Eqs. (5.7-3) and (5.7-4), fuel efficiency can also be expressed as:

$$EF = 100\left(\frac{QrF}{QrF} - \frac{QrL}{QrF} + \frac{QrB}{QrF}\right) = 100 \qquad (5.7\text{-}5)$$

$$- QpL + QpB, \%$$

While most losses and credits can be calculated conveniently on a percent input from fuel basis as they are a function of the input from fuel, some losses and credits are calculated more readily on a Btu/h (W) basis. The expression for fuel efficiency using mixed units for losses and credits is:

$$EF = (100 - SmQpL \qquad (5.7\text{-}6)$$

$$+ SmQpB)\left(\frac{QrO}{QrO + SmQrL - SmQrB}\right), \%$$

where

- $SmQpL$ and $SmQpB$ are the sum of the losses and credits calculated on percent input from fuel basis
- $SmQrL$ and $SmQrB$ are the sum of the losses and credits calculated on a Btu/h (W) basis (refer to Appendix C for derivation)

The mass flow rate of fuel (MrF) may be calculated from output and fuel efficiency determined by the energy balance method:

$$MrF = 100\left(\frac{QrO}{EF\ HHVF}\right), \text{ lbm/h (kg/s)} \qquad (5.7\text{-}7)$$

The calculated mass flow rate of solid fuel is generally more accurate than the measured flow.

The energy balance method is the preferred method for determining efficiency. It is usually more accurate than the input-output method (refer to Subsection 5.7.2) because measurement errors impact the losses and credits rather than the total energy. For example, if the total losses and credits are 10% of the total input, a 1% measurement error would result in only a 0.1% error in efficiency, where a 1% error in measuring fuel flow results in a 1% error in efficiency. Another major advantage to the energy balance method is that reasons for variations in efficiency from one test to the next can be identified. Also, it is readily possible to correct the efficiency to reference or contract conditions for deviations from test conditions such as the fuel analysis.

5.7.2 Efficiency — Input-Output Method. Efficiency calculated by the input-output method is based upon measuring the fuel flow and steam generator fluid side conditions necessary to calculate output. The uncertainty of efficiency calculated by the input-output method is directly proportional to the uncertainty of determining the fuel flow, a representative fuel analysis, and steam generator output. Therefore, to obtain reliable results, extreme care must be taken to determine these items accurately:

Copyright ASME International
Provided by IHS under license with ASME
No reproduction or networking permitted without license from IHS Not for Resale

$$EF = 100 \frac{Output}{Input} = 100 \frac{QrO}{MrF\ HHVF}, \% \qquad (5.7\text{-}8)$$

where MrF is the measured mass flow rate of fuel.

5.7.3 Efficiency Calculation Convergence. The calculation procedure is iterative for most types of units. That is, an efficiency or fuel rate (input) is estimated to initiate the efficiency calculations. The calculations are repeated until the efficiency (fuel rate/input) is within an acceptable limit. The calculation process is relatively insensitive to the initial estimate and converges easily.

For calculations to determine efficiency only, where the efficiency result is only required for the first or second decimal place, a convergence limit of 0.1% efficiency is sufficient (1.0% for hand calculations).

For calculations to develop sensitivity coefficients (refer to Section 5.16), the sensitivity coefficient is determined from the difference between the base efficiency and the efficiency calculated with the perturbed data. Since the perturbation may be small, the change in efficiency may be small. For developing sensitivity coefficients, an efficiency convergence limit on the order of 10^{-5}% efficiency is recommended.

5.8 FUEL PROPERTIES

5.8.1 Heating Value of Fuel. Higher heating value, *HHVF* refers to the as-fired higher heating value on a constant pressure basis. For solid and liquid fuels, *HHVF* is determined in a bomb calorimeter, which is a constant volume device. Since fuel is burned in a steam generator under essentially constant pressure conditions, the bomb calorimeter values must be corrected to a constant pressure basis:

$$HHVF = HHVFcv + 2.644\ MpH2F, \quad \text{Btu/lbm (J/kg)} \qquad (5.8\text{-}1)$$

where *HHVFcv* is the higher heating value of the fuel on a constant volume basis as determined from a bomb calorimeter and *MpH2F* is the mass percent of H_2 in the fuel.

The user should ensure that the laboratory performing the fuel analysis has not made this correction. For gaseous fuels, the higher heating value is determined under constant pressure conditions; therefore, the calorimeter values do not need correction.

The calculations throughout this Code utilize higher heating value expressed in units on a mass basis, Btu/lbm (J/kg). For gaseous fuels, the higher heating value is normally expressed on a volume basis, Btu/scf (J/Nm^3), *HHVG*. For compatibility with the units used in the calculation procedure, the higher heating value must be converted to a energy per unit mass basis, Btu/lbm (J/kg):

$$HHVF = \frac{HHVGF}{DnGF}, \text{ Btu/lbm (J/kg)} \qquad (5.8\text{-}2)$$

where

DnGF = density of gas at the standard temperature and pressure conditions used for *HHVGF*, lbm/scf (kg/Nm^3)

For fossil fuels, the reasonableness of the higher heating value can be checked based on the theoretical air calculated from the ultimate analysis (refer to Subsection 5.11.3). Higher heating value based on typical theoretical air values can be estimated using the following equation:

$$HHVF = 10^6 \frac{MFrThA}{MqThAF}, \text{ Btu/lbm (J/kg)} \qquad (5.8\text{-}3)$$

where

MFrThA = theoretical air, lbm/lbm (kg/kg) fuel as-fired

MqThAF = normal value of theoretical air for fuel being checked, lbm/MBtu. (Refer to Subsection 5.11.3 for typical ranges.)

5.8.2 Chemical Analysis of Fuel. An ultimate analysis of solid and liquid fuels is required to determine the mass of the individual elements involved in the combustion process, and the mass of inert ash. The total as-fired moisture content must also be determined. When the ultimate analysis is on an air dried or moisture free basis, it must be converted to an as-fired basis. A gaseous fuel analysis is usually reported on a dry or saturated basis. The amount of moisture as-fired should be determined and the chemical analysis and *HHVGF* should be adjusted to the as-fired condition.

The ultimate analysis of the fuel is used to calculate the quantity of air and products of combustion. When the ultimate analysis is expressed on a percent mass basis, the constituents considered in the calculations are carbon (CF), hydrogen (H_2F), nitrogen (N_2F), sulfur (SF), oxygen (O_2F), water (H_2OF), and ash (AsF). Trace gaseous elements, such as chlorine, which is not considered in the calculations, should be added to the nitrogen in the fuel for calculation purposes. Note that hydrogen is considered on a dry or moisture free basis, i.e., it does not include the hydrogen in the water in the fuel.

Copyright ASME International
Provided by IHS under license with ASME
No reproduction or networking permitted without license from IHS
Not for Resale

For some combustion processes, those involving solid fuels in particular, all of the carbon may not be burned. When there is unburned carbon, the combustion calculations utilize the carbon burned, Cb, rather than the actual carbon in the fuel (refer to Subsection 5.11.3). Similarly, if it is ascertained that there is a significant quantity of unburned hydrogen (greater than 1% of the actual hydrogen in the fuel), the hydrogen burned, H_2b, should be used in the calculations rather than the actual hydrogen available in the fuel. (Refer to Subsection 5.10.3.)

A proximate analysis for solid fuels (typically coal) includes the determination of volatile matter, fixed carbon and ash, as well as the as-fired moisture. The sulfur content may also be reported. A complete proximate analysis is not necessarily required for determination of efficiency. Typical applications for a proximate analysis include:

- A cost-effective means for obtaining the variations in ash, moisture, and sulfur during a test, to better quantify the uncertainty of these constituents. A large number of proximate analyses can be used to determine ash, moisture, and possibly sulfur in lieu of a large number of ultimate analyses.
- For coal, the volatile matter and fixed carbon are required to determine enthalpy of the entering coal. If not determined, dry ash free values may be agreed upon prior to the test and adjusted for the measured ash and moisture content of the as-fired fuel.
- Volatile matter and fixed carbon (frequently expressed as the ratio of fixed carbon to volatile matter) are an indication of how difficult a coal is to burn. In general, the lower the volatile matter with respect to the fixed carbon, the more difficult the fuel is to burn. For guarantee tests, this ratio may be considered when evaluating whether the test fuel is suitably equivalent to the contract fuel.

A gaseous fuel analysis expresses the individual hydrocarbon compounds and the other constituents on a volumetric percentage basis. For the combustion calculations in this Code, the gaseous fuel analysis is converted to a mass basis. The Gaseous Fuel Calculation Form included in Appendix A may be used for this conversion. The calculations follow the general logic below:

$$MpFk = 100 \frac{MvFk}{MwGF}, \% \text{ mass} \qquad (5.8\text{-}4)$$

$$MwGF = \Sigma MvFk, \text{ lbm/mole (kg/mole)} \qquad (5.8\text{-}5)$$

$$MvFk = Mwk \, \Sigma \frac{VpGj \, Mokj}{100}, \qquad (5.8\text{-}6)$$

lbm/mole fuel (kg/mole)

where

k = fuel constituents expressed on a mass basis. For this Code, these are C, H_2, N_2, S, O_2, H_2O. For a gaseous fuel, it is assumed that water is in a vaporous state and the acronym H_2OV is used throughout the calculations.

j = fuel components expressed on a by volume or mole basis, such as CH_4, C_2H_6, etc.

$VpGj$ = as-fired fuel components (such as CH_4, C_2H_6), percent by volume

$Mokj$ = moles of constituent k in component j. For example:
For component $j = C_2H_6$, and k = C, $Mokj = 2$.
For component $j = C_2H_6$, and $k = H_2$, $Mokj = 3$.

Mwk = molecular weight of constituent k, lbm/mole (kg/mole)

$MwGF$ = molecular weight of the gaseous fuel, lbm/mole (kg/mole). This is the sum of each $MVkF$ value on a mass per unit mole (or volume) basis, lbm/mole (kg/mole).

$MvFk$ = mass of constituent k per unit volume of fuel, lbm/mole or lbm/ft^3 (kg/mole or kg/m^3)

$MpFk$ = mass percentage of constituent k

5.8.3 Multiple Fuels. When more than one fuel is fired, the ultimate analysis and higher heating value is the weighted average based upon the mass flow rate of each fuel. For the initial calculation, the total fuel input is estimated from measured fuel flow or calculated from output and estimated efficiency. The input from the primary fuel (fuel with the major input) is calculated by difference from the total input and the input calculated for the fuel(s) for which the measured mass flow rate is used. The mass flow rate of the unmeasured fuel is then calculated from the *HHV* and input from that fuel. The efficiency calculations must be reiterated until the estimated input and the input calculated from measured output and efficiency are within the convergence tolerance discussed in Subsection 5.7.3.

5.9 SORBENT AND OTHER ADDITIVE PROPERTIES

This Section addresses solid and/or gaseous material other than fuel that is added to the gas side of the

Copyright ASME International
Provided by IHS under license with ASME
No reproduction or networking permitted without license from IHS
Not for Resale

steam generator envelope. Additives can impact the efficiency and combustion process in several ways:

- additives may increase the quantity of residue and "sensible heat of residue" losses
- additives may introduce moisture which increases "moisture in flue gas" losses and alters the flue gas specific heat
- additives may undergo a chemical change and alter the flue gas composition or may alter the air requirement
- chemical reactions that are endothermic require heat which is an additional loss
- chemical reactions that are exothermic add heat which is an additional credit

Since limestone is widely used for sulfur removal, this Code specifically addresses the impact of the addition of limestone on the efficiency and combustion calculations. The term "sorbent" is used throughout the Code to refer to any material added to the flue gas (within the steam generator envelope) that is not fuel. The calculations for limestone demonstrate the principles of calculation required for the effect of most additives on efficiency and combustion products. If the effects of other additives on flue gas constituents or particulates are independently demonstrated and measurable or calculable, the parties to the test may include the associated credits and/or losses. In addition to limestone, the calculations address hydrated lime, which consists of calcium hydroxide, $Ca(OH)_2$, and magnesium hydroxide $Mg(OH)_2$, as a potential sorbent for reducing SO_2. When inert materials such as sand are added, the calculations below should be made as if limestone containing only inert material and moisture were used.

5.9.1 *MFrSb* — Mass Fraction of Sorbent, lbm/lbm Fuel (kg/kg). Combustion and efficiency calculations are sensitive to the measured sorbent mass flow rate. Therefore, the mass flow rate of sorbent must be determined accurately.

To simplify the combustion and efficiency calculations, the sorbent mass flow rate is converted to a mass of sorbent/mass of fuel basis. The mass flow rate of fuel is measured or estimated initially. The efficiency calculations are repeated until the estimated and calculated fuel mass flow rates are within the convergence tolerance of Subsection 5.7.3:

$$MFrSb = \frac{MrSb}{MrF}, \text{ lbm/lbm fuel (kg/kg fuel)} \qquad (5.9\text{-}1)$$

where

$MrSb$ = measured mass flow rate of sorbent, lbm/h (kg/s)

MrF = mass flow rate of fuel, lbm/h (kg/s). Repeat efficiency calculation until the calculated MrF converges within the guidelines of Subsection 5.7.3.

5.9.2 *MFrSbk* — Mass of Constituents in Sorbent, lbm/lbm Fuel (kg/kg). The important constituents in the sorbent are the reactive products, the moisture, and the inerts. The mass of each constituent is converted to a mass/mass from fuel basis:

$$MFrSbk = MFrSb \frac{MpSbk}{100}, \text{ lbm/lbm fuel (kg/kg)} \qquad (5.9\text{-}2)$$

where

k = constituent in the sorbent. The reactive constituents specifically addressed are:

$CaCO_3$ = calcium carbonate (Cc)

$MgCO_3$ = magnesium carbonate (Mc)

$Ca(OH)_2$ = calcium hydroxide (Ch)

$Mg(OH)_2$ = magnesium hydroxide (Mh)

$MpSbk$ = percent of constituent k in the sorbent

5.9.3 *MqCO2Sb* — Gas From Calcination of Sorbent, lbm/Btu (kg/J). When heat is added to calcium carbonate and magnesium carbonate, CO_2 is released. This increases the dry gas weight:

$$MoCO2Sb = \Sigma MoFrClhk \frac{MFrSbk}{Mwk}, \qquad (5.9\text{-}3)$$

moles/lbm fuel (moles/kg)

$$MFrCO2Sb = 44.01\ MoCO2Sb, \qquad (5.9\text{-}4)$$

lbm/lbm fuel (kg/kg)

$$MqCO2Sb = \frac{MFrCO2Sb}{HHVF}, \text{ lbm/Btu (kg/J)} \qquad (5.9\text{-}5)$$

where

k = constituents that contain carbonates, typically calcium carbonate (Cc) and magnesium carbonate (Mc)

$MoFrClhk$ = calcination fraction for constituent k, moles CO_2 released/mole of constituent. Two constituents are addressed directly by this Code. Magnesium carbonate (Mc) calcines readily at partial pressures of CO_2 typical of combustion with air

Copyright ASME International
Provided by IHS under license with ASME
No reproduction or networking permitted without license from IHS
Not for Resale

and normal operating temperatures of atmospheric fluidized bed steam generators and thus the calcination fraction is normally considered to be 1.0. Not all of the $CaCO_3$ (Cc) is converted to CaO and CO_2, however. Refer to Subsection 5.10.8 for determination.

Mwk = molecular weight of constituent *k*, lbm/mole (kg/mole)

MoCO2Sb = moles of gas (CO_2) from sorbent, moles/lbm fuel (moles/kg)

MFrCO2Sb = mass fraction of gas (CO_2) from sorbent, lbm/lbm fuel (kg/kg), and where 44.01 is the molecular weight of carbon dioxide

MqCO2Sb = mass of gas (CO_2) from sorbent on an input from fuel basis, lbm/Btu (kg/J)

5.9.4 *MqWSb* — Water From Sorbent, lbm/Btu (kg/J). The total moisture added due to sorbent is the sum of the moisture in the sorbent and the moisture released due to the dehydration of calcium hydroxide and magnesium hydroxide:

$$MoWSb = \frac{MFrH2OSb}{18.015} + \Sigma\frac{MFrSbk}{Mwk}, \quad \text{moles/lbm fuel (moles/kg)} \tag{5.9-6}$$

$$MFrWSb = 18.015 MoWSb, \text{ lbm/lbm fuel (kg/kg)} \tag{5.9-7}$$

$$MqWSb = \frac{MFrWSb}{HHVF}, \text{ lbm/Btu (kg/J)} \tag{5.9-8}$$

$$MrWSb = MFrWSb\ MrF, \text{ lbm/h (kg/s)} \tag{5.9-9}$$

where

k = constituents that contain water or hydroxides that are dehydrated, typically calcium hydroxide (Ch) and magnesium hydroxide (Mh)

MFrH2OSb = mass fraction of the water in sorbent, lbm/lbm fuel (kg/kg)

MoWSb = total moles of water from sorbent, moles/lbm fuel (moles/kg)

MFrWSb = mass fraction of total water from sorbent, lbm/lbm fuel (kg/kg)

MqWSb = mass of total water from sorbent on an input from fuel basis, lbm/Btu (kg/J)

MrWSb = mass flow rate of total water from sorbent, lbm/h (kg/s)

5.9.5 *MFrSc* — Sulfur Capture/Retention Ratio, lbm/lbm (kg/kg). The sulfur capture/retention ratio is the mass of sulfur removed divided by the total mass of sulfur available. The sulfur capture/retention ratio is determined from the measured O_2 and SO_2 in flue gas.

5.9.5.1 *MFrSc* When SO_2 and O_2 Are Measured on a Dry Basis

$$MFrSc = \frac{1 - \left(\frac{DVpSO2\ (MoDPcu + 0.7905\ MoThAPcu)}{100\ (1 - DVpO2/20.95) MoSO2}\right)}{\left(1 + 0.887\left(\frac{DVpSO2/100}{1 - DVpO2/20.95}\right)\right)}, \quad \text{lbm/lbm (kg/kg)} \tag{5.9-10}$$

$$MoThAPcu = \frac{1}{0.2095}\left(\frac{MpCb}{1201} + \frac{MpH2F}{403.2} + \frac{MpSF}{3206.4} - \frac{MpO2F}{3200}\right), \quad \text{moles/mass fuel} \tag{5.9-11}$$

$$MoDPcu = \frac{MpCb}{1201} + \frac{MpSF}{3206.4} + \frac{MpN2F}{2801.3} + MoCO2Sb, \text{ moles/mass fuel} \tag{5.9-12}$$

$$MoSO2 = \frac{MpSF}{3206.4}, \text{ moles/lbm fuel (moles/kg)} \tag{5.9-13}$$

where

MoDPcu = moles of dry products from the combustion of fuel (CO_2, SO_2, N_2 from fuel) with 100% conversion of the sulfur to SO_2 plus the dry gas from sorbent (CO_2), moles/mass fuel

MoThAPcu = moles of theoretical air required for the gasified products in the fuel with total conversion of the sulfur in fuel to SO_2, moles/mass of fuel. The constituents in the fuel, CB (carbon burned), H_2, S, and O_2 are on a percent mass basis.

Copyright ASME International
Provided by IHS under license with ASME
No reproduction or networking permitted without license from IHS
Not for Resale

MoSO2 = moles of SO_2 per lbm fuel that would be produced with 100% conversion of the sulfur in the fuel to SO_2, moles/lbm fuel (moles/kg)

DVpO2,

DVpSO2 = measured O_2 and SO_2 in the flue gas, percent volume. They must be measured at the same location and expressed on a dry basis. SO_2 is usually measured in ppm. To convert to a percent basis, divide ppm by 10,000.

5.9.5.2 *MFrSc* When SO_2 and O_2 Are Measured on a Wet Basis

$$MFrSc = \frac{1 - \left(\frac{VpSO2\ [MoWPcu + MoThAPcu\ (0.7905 + MoWA)]}{100[1 - (1 + MoWA)\ VpO2/20.95]MoSO2}\right)}{1 + K\left(\frac{VpSO2/100}{1 - (1 + MoWA)\ VpO2/20.95}\right)},$$

lbm/lbm (kg/kg) (5.9-14)

$$MoWPcu = MoDPcu + \frac{MpH2F}{201.6} + \frac{MpWF}{1801.6} + \frac{MFrWAdz}{18.016} + MoWSB, \text{ moles/mass fuel} \quad (5.9\text{-}15)$$

$$K = 2.387\ (0.7905 + MoWA) - 1.0 \quad (5.9\text{-}16)$$

$$MoWA = 1.608\ MFrWA, \text{ moles/mole} \quad (5.9\text{-}17)$$

MoWPcu = *MoDPcu* plus moles of water from flue, plus moles of water from sorbent, plus moles of additional water, moles/mass fuel

MFrWA = mass of moisture in air per mass of dry air, lbm/lbm (kg/kg)

MoWA = moles moisture per mole of dry air, moles/mole

MFrWAdz = additional moisture at location *z*, such as atomizing steam and sootblowing steam, lbm/lbm fuel as-fired. Also refer to Subsection 5.12.7.

VpO2,

VpSO2 = measured O_2 and SO_2 in the flue gas, percent volume. They must be measured at the same location and expressed on a wet basis. SO_2 is usually measured in ppm. To convert to a percent basis, divide ppm by 10,000.

5.9.6 *MoFrCaS* — Calcium to Sulfur Molar Ratio, moles/mole

$$MoFrCaS = MFrSb \frac{MwS}{MpSF} \Sigma \frac{MpCak}{MwCak}, \quad (5.9\text{-}18)$$

moles/mole

where

MpCak = percent of calcium in sorbent in form of constituent *k*, percent mass

MwCak = molecular weight of calcium compound *k*, lbm/mole (kg/mole)

$CaCO_3$ = calcium carbonate (Cc) *MW* = 100.089

$Ca(OH)_2$ = calcium hydroxide (Ch) *MW* = 74.096

MwS = molecular weight of sulfur, 32.064 lbm/mole

5.9.7 *MFrSsb* — Mass Fraction Spent Sorbent, lbm/lbm Fuel (kg/kg). Spent sorbent is the solid residue remaining from the sorbent after evaporation of the moisture in the sorbent, calcination/dehydration and mass gain due to sulfation:

$$MFrSsb = MFrSb - MFrCO2Sb - MFrWSb + MFrSO3, \quad (5.9\text{-}19)$$

lbm/lbm fuel (kg/kg)

$$MFrSO3 = 0.025\ MFrSc\ MPSF, \quad (5.9\text{-}20)$$

lbm/lbm fuel (kg/kg)

where

MFrSO3 = mass fraction of SO_3 formed in the sulfation (sulfur capture) process, lbm/lbm fuel (kg/kg). The constant 0.025 is the molecular weight of sulfur divided by the molecular weight of SO_3 and divided by 100 to convert percent mass to mass fraction.

Copyright ASME International
Provided by IHS under license with ASME
No reproduction or networking permitted without license from IHS Not for Resale

5.10 RESIDUE PROPERTIES

Residue is the ash and unburned fuel removed from the steam generating unit. When a sorbent such as limestone or an inert material such as sand is introduced, the residue includes the spent sorbent (solid sorbent products remaining after evaporation of the moisture in the sorbent, calcination/dehydration, and weight gain due to sulfation). Residue is analogous to refuse when used to refer to the solid waste material removed from a fossil fuel fired steam generator.

5.10.1 *MFrRs* — Mass of Residue, lbm/lbm Fuel (kg/kg). The ash in fuel and spent sorbent are converted to a mass of residue per mass of fuel basis:

$$MFrRs = \frac{MpAsF + 100\ MFrSsb}{(100 - MpCRs)}, \text{ lbm/lbm fuel (kg/kg)} \qquad (5.10\text{-}1)$$

where

MpAsF = ash in fuel, percent mass
MFrSsb = mass fraction of spent sorbent per mass of fuel, lbm/lbm fuel (kg/kg)
MpCRs = unburned carbon in the residue, percent mass

5.10.2 *MqRsz* — Mass of Residue at Location *z*, lbm/Btu (kg/J). The mass of residue exiting the steam generator envelope must be determined for the energy balance calculations and for the intermediate residue calculations below:

$$MqRsz = \frac{MpRsz\ MFrR}{100\ HHVF}, \text{ lbm/Btu (kg/J)} \qquad (5.10\text{-}2)$$

where *MpRsz* is the percent of total residue exiting the steam generator envelope at location *z*, percent.

It may be impractical to measure the residue collected at all extraction points. In such cases, the unmeasured residue may be calculated by difference from the total calculated residue and the measured residue. The estimated split between the unmeasured locations must be agreed upon by all parties to the test:

$$MpRsz = 100\ \frac{MrRsz}{MFrRs\ MrF}, \text{ \% mass} \qquad (5.10\text{-}3)$$

where

MpRsz = residue collected at location *z*, percent
MrRsz = measured mass flow rate of residue at location *z*, lbm/h (kg/s)
MrF = mass flow rate of fuel, lbm/h (kg/s). The mass flow rate of fuel should be measured or estimated initially and the calculations repeated until the calculated mass flow rate of fuel based on efficiency is within the guidelines of Subsection 5.7.3.

The most universal measurement location for the mass of residue is the dust loading or fly ash leaving the unit, refer to Section 4.11. The results of this test procedure are normally reported on a mass per volume of flue gas basis. While the dust loading result from this test is considered accurate, the flue gas mass flow calculation from this test is not considered as accurate as the gas mass flow calculated stoichiometrically by this Code. Accordingly, the mass flow rate of residue based on dust loading results is calculated as follows:

$$MrRsz = \frac{MvRs\ MrFg}{C1\ DnFg}, \text{ lbm/h (kg/s)} \qquad (5.10\text{-}4)$$

where

MvRs = dust loading results tested in accordance with Section 4.11, grains/ft^3 (g/m^3)
MrFg = mass flow rate of wet flue gas, refer to Subsection 5.12.9, lbm/h (kg/s)
DnFg = density of wet flue gas at conditions MVR above reported, lbm/ft^3 (kg/m^3)
C1 = 6,957 grains/lbm (US Customary), 1,000 g/kg (SI)

5.10.3 *MpCRs* — Unburned Carbon in the Residue, percent. The unburned carbon in the residue, *MpCRs*, refers to the free carbon and is used to determine unburned carbon from fuel. The residue contains carbon in the form of carbonates as well as free carbon when limestone is utilized, as well as from fuels with a high carbonate content in the ash. The standard tests for carbon in the residue determine total carbon (*MpToCRs*). It is also necessary to determine the carbon dioxide content in the residue (*MpCO2Rs*), and correct the total carbon results to a free carbon basis (*MpCRs*). Refer to Section 4.12 regarding the analysis methods to be specified. If the lab analysis is not clear whether total carbon (*MpToCRs*) or free carbon (*MpCRs*) is reported, it should be clarified. When sorbent with calcium carbonate is utilized, the CO_2 in residue is required to calculate the quantity of $CaCO_3$ in the residue and the calcination fraction of calcium carbonate in the sorbent:

$$MpCRs = MpToCRs - \frac{12.01}{44.01} MpCO2Rs, \text{ lbm/100 lbm residue} \qquad (5.10\text{-}5)$$

Copyright ASME International
Provided by IHS under license with ASME
No reproduction or networking permitted without license from IHS
Not for Resale

When residue is collected at more than one location, the weighted average of carbon and carbon dioxide in residue is calculated from:

$$MpCRs = \Sigma \frac{MpRsz\ MpCRsz}{100},\ \%\ \text{mass} \qquad (5.10\text{-}6)$$

$$MpCO2Rs = \Sigma \frac{MpRsz\ MpCO2Rsz}{100},\ \%\ \text{mass} \qquad (5.10\text{-}7)$$

NOTE: If measured, unburned hydrogen is to be reported on a dry basis. On units utilizing limestone sorbent, there is a strong potential that hydrogen in the residue is from the water of hydration of calcium oxide which will not be detected by the normal method of testing for free moisture. If it is ascertained that unburned hydrogen in the residue is real and significant and it cannot be corrected by operating techniques, the hydrogen in the fuel should be corrected for unburned hydrogen for the combustion and efficiency calculations in the same manner as unburned carbon. Refer also to Subsection 5.10.5.

5.10.4 *MpUbC* — Unburned Carbon in Fuel, percent mass. The unburned carbon in the residue is used to calculate the percent of the carbon in the fuel that is unburned:

$$MpUbC = MpCRs\ MFrRs,\ \%\ \text{mass} \qquad (5.10\text{-}8)$$

5.10.5 *MpCb* — Carbon Burned, percent mass. The actual percent carbon in the fuel that is burned is the difference between the carbon in the fuel from the ultimate analysis and the unburned carbon. The actual carbon burned (*MpCb*) is used in the stoichiometric combustion calculations in lieu of carbon in fuel (*MpCF*):

$$MpCb = MpCF - MpUbC,\ \%\ \text{mass} \qquad (5.10\text{-}9)$$

NOTE: If it is determined that there is unburned hydrogen, *MpUbH2*, the actual hydrogen burned, *MpH2b*, must be used in the combustion and efficiency calculations in lieu of *MpH2F*:

$$MpH2b = MpH2F - MpUbH2$$

Refer to Subsection 5.10.3.

5.10.6 *MpCbo* — Carbon Burnout, percent. Carbon burnout is the carbon burned divided by the carbon available and expressed as a percentage:

$$MpCbo = 100\frac{MpCb}{MpCF},\ \% \qquad (5.10\text{-}10)$$

5.10.7 *ECm* — Combustion Efficiency, percent. The combustion efficiency is 100 minus the unburned combustible losses on Section 5.14 (excluding the loss due to pulverizer rejects):

$$ECm = 100 - QpLUbC - QpLCO - QpLH2Rs - QpLUbHc,\ \% \qquad (5.10\text{-}11)$$

5.10.8 *MoFrClhCc* — Calcination Fraction of Calcium Carbonate, moles CO_2/mole $CaCO_3$. Calcination is the endothermic chemical reaction when carbon dioxide is released from compounds containing carbonate (CO_3) such as calcium carbonate to form calcium oxide and magnesium carbonate to form magnesium oxide. Magnesium carbonate, $MgCO_3$ (Mc), calcines readily under the normal operating conditions of atmospheric fluidized bed boilers. However, not all of the calcium carbonate, $CaCO_3$ (Cc), is converted to CaO and CO_2. The calcination fraction is determined from the measured CO_2 in the residue. Assuming that the principal carbonates in the sorbent are magnesium carbonate and calcium carbonate, these calculations assume that the CO_2 in the residue is in the form of calcium carbonate. If a sorbent is used that contains significant amounts of a carbonate that is more difficult to calcine than calcium carbonate, the principles of this Code should be followed but the amount of CO_2 in the residue should be proportioned among the carbonate compounds in view of the difficulty of calcination:

$$MoFrClhCc = 1 - \frac{MrRs\ MpCO2Rs\ MwCc}{MFrSb\ MpSbCc\ MwCO2} \qquad (5.10\text{-}12)$$

where

MpCO2Rs = mass of CO_2 in residue, percent mass
MFrSb = mass fraction of sorbent, lbm/lbm fuel (kg/kg)
MpSbCc = mass of $CaCO_3$ (Cc) in sorbent, percent
MwCc = molecular weight of $CaCO_3$ (Cc), 100.089 lbm/mole (kg/mole)
MwCO2 = molecular weight of CO_2, 44.01 lbm/mole (kg/mole)

5.11 COMBUSTION AIR PROPERTIES

5.11.1 Physical Properties. The calculations and derivation of constants used in this Code are based upon

Copyright ASME International
Provided by IHS under license with ASME
No reproduction or networking permitted without license from IHS
Not for Resale

a composition of air as follows [1]: 0.20946 O_2, 0.78102 N_2, 0.00916 Ar, 0.00033 CO_2 moles per mole of air (and other trace elements), yielding an average molecular weight of 28.9625. For simplification of the calculations (N_2) includes the argon and other trace elements, and is referred to as "atmospheric nitrogen" (N_{2a}), having an equivalent molecular weight of 28.158.

Below is a summary of the nominal properties of air used in this Code:

- volumetric composition: 20.95% oxygen, 79.05% nitrogen
- gravimetric composition: 23.14% oxygen, 76.86% nitrogen

5.11.2 *MFrWDA* — Moisture in Air, lbm/lbm Dry Air (kg/kg). The moisture in air is determined from measured inlet air wet-bulb and dry-bulb temperature or dry-bulb temperature and relative humidity in conjunction with psychrometric charts, or calculated from vapor pressure as determined from Carrier's Eq. (5.11-2) when wet-bulb temperature is measured or Eq. (5.11-3) when relative humidity is measured:

$$MFrWDA = 0.622 \frac{PpWvA}{(Pa - PpWvA)}, \quad \text{lbm } H_2O\text{/lbm dry air (kg/kg)} \tag{5.11-1}$$

$$PpWvA = PsWTwb - \frac{(Pa - PsWvTwb)(Tdbz - Twbz)}{2830 - 1.44\ Twbz}, \text{ psia} \tag{5.11-2}$$

$$PpWvA = 0.01\ RHMz\ PsWvTdb, \text{ psia} \tag{5.11-3}$$

$$PsWvTz = C1 + C2T + C3T^2 + C4T^3 + C5T^4 + C6T^5, \text{ psia} \tag{5.11-4}$$

where

PpWvA = partial pressure of water vapor in air, psia. This may be calculated from relative humidity or wet- and dry-bulb temperature.

PsWvTz = saturation pressure of water vapor at wet-bulb temperature (*PsWvTwb*) or dry-bulb temperature (*PsWvTdb*), psia. The curve fit is valid for temperatures from 32°F to 140°F:

C1 = 0.019257
C2 = 1.289016E–3
C3 = 1.211220E–5
C4 = 4.534007E–7
C5 = 6.841880E–11
C6 = 2.197092E–11

Pa = barometric pressure, psia. To convert in. Hg to psia, divide by 2.0359.

Tdbz = temperature of air (dry-bulb) at location *z*, °F

Twb = temperature of air (wet-bulb) at location *z*, °F

Rhmz = relative humidity at location *z*

5.11.3 *MqThACr* — Theoretical Air (Corrected), lbm/Btu (kg/J). Theoretical air is defined as the ideal minimum air required for the complete combustion of the fuel, i.e., carbon to CO_2, hydrogen to H_2O, and sulfur to SO_2. In the actual combustion process, small amounts of CO and nitrous oxides (NO_x) are formed and commonly measured. Also, small amounts of SO_3 and gaseous hydrocarbons are formed but less frequently measured. The impact of these minor species is negligible on the combustion calculations addressed by this Code. Refer to Appendix C for a rigorous treatment of CO and NO_x which may be used if CO and/or NO_x is significant (greater than 1,000 ppm):

$$MqThAf = \frac{MFrThA}{HHVF}, \text{ lbm/Btu (kg/J)} \tag{5.11-5}$$

$$MFrThA = 0.1151\ MpCF + 0.3430\ MpH2F + 0.0431\ MpSF - 0.0432\ MpO2F, \text{ lbm/lbm fuel (kg/kg)} \tag{5.11-6}$$

where fuel constituents *MpCF*, *MpH2F*, *MpSF*, and *MpO2F* are on a percent mass basis.

For typical fossil fuels, the value of calculated theoretical air is a good check on the reasonableness of the fuel analysis. Expressed on a lbm/million Btu (MBtu) basis (*MQTHA* × 10^6), a valid fuel analysis should fall within the ranges of theoretical air shown below:

Coal (VM_{maf} > 30%)	735–775 lbm/MBtu
Oil	735–755 lbm/MBtu
Natural Gas	715–735 lbm/MBtu

Copyright ASME International
Provided by IHS under license with ASME
No reproduction or networking permitted without license from IHS
Not for Resale

The theoretical air for carbon and hydrogen, 816 and 516 lbm/MBtu respectively, are the practical maximum and minimum values for hydrocarbon fuels.

For monitoring operation and analysis of combustion, the theoretical air required to produce the gaseous products of combustion is more meaningful than the ideal value defined above. In commercial applications, particularly for solid fuels, it is not feasible to burn the fuel completely. The gaseous products of combustion are the result of the fuel that is burned or gasified. When additives are used, secondary chemical reactions may also occur. For example, when CaO reacts with SO_2 in the flue gas to form $CaSO_4$ (a method of sulfur reduction), additional O_2 supplied from air is required. Therefore, for purposes of the calculations in this Code, corrected theoretical air which accounts for the actual combustion process is used.

Corrected theoretical air is defined as the amount of air required to complete the combustion of the gasified fuel and support secondary chemical reactions with zero excess O_2. By definition, the theoretical products of combustion would have no CO or gaseous hydrocarbons:

$$MqThACr = \frac{MFrThACr}{HHVF}, \text{ lbm/Btu (kg/J)} \qquad (5.11\text{-}7)$$

$$MFrThACr = 0.1151\ MpCb + 0.3430\ MpH2F + 0.0431\ MpSF\ (1 + 0.5\ MFrSc) - 0.0432\ MpO2F, \text{ lbm/lbm fuel as-fired} \qquad (5.11\text{-}8)$$

$$MoThACr = \frac{MFrThACr}{28.963}, \text{ moles/mass fuel as-fired} \qquad (5.11\text{-}9)$$

where

MqThACr = theoretical air (corrected), lbm/Btu. Note that when a sulfur removal process is employed, the excess air and combustion calculations are dependent upon where the sulfur removal occurs in relation to the flue gas composition measurements.

MoThACr = theoretical air (corrected), moles/mass fuel as-fired

MpCb = *MpCF* − *MpUbC* = carbon burned on a mass percentage basis

MFrSc = sulfur capture ratio, lbm/lbm. This item is normally assumed to be zero when the sulfur removal occurs external to the steam generator envelope. Refer to Subsection 5.9.5 for calculation.

5.11.4 *XpA* — Excess Air, percent. Excess air is the actual quantity of air used, minus the theoretical air required, divided by the theoretical air, and expressed as a percentage:

$$XpA = 100\ \frac{(MFrDA - MFrThACr)}{MFrThACr} = 100\ \frac{(MqDA - MqThACr)}{MqThACr}, \% \qquad (5.11\text{-}10)$$

In this Code, corrected theoretical air [Eq. (5.11-7)] is used as the basis for calculating excess air. Defined as such, zero percent O_2 in the flue gas corresponds to zero percent excess air. Excess air may also be defined based on ideal theoretical air, and calculated by substituting ideal theoretical air [Eq. (5.11-5) or (5.11-6)] in Eq. (5.11-10) above.

For efficiency calculations, excess air must be determined at the steam generator exit (14), as well as air heater exits (15), (15A), and (15B), if applicable; and air heater gas inlets (14A) and (14B), if different from the steam generator exit. Refer to Figs. 1.4-1 through 1.4-7, and Section 1.4 for boundary data identification numbers. Excess air is determined from the volumetric composition of the flue gas. It may be calculated stoichiometrically based on O_2 or CO_2, and analytically based on CO_2 and *MpCb/S* ratio in the fuel. Measurement of O_2 is the most common and preferred continuous analysis method. O_2 is used as the basis for calculation of excess air in this Code. An additional advantage of using measured O_2 is that for a given type of fuel (coal, oil, gas, etc.), excess air depends only on O_2 and not on the specific analysis. Conversely, the relationship between CO_2 and excess air is strongly dependent on the fuel analysis due to the amount of CO_2 produced being dependent on the carbon/hydrogen ratio of the fuel. When O_2 is measured on a wet basis, an additional variable is introduced (H_2O in the flue gas). However, even on a wet basis, O_2 versus excess air is essentially constant for typical variations in moisture in flue gas produced from a given fuel source.

5.11.4.1 O_2 Analysis on DRY BASIS Where the Moisture in the Flue Gas Is Condensed Such as When an Extractive Sampling System Is Used

$$XpA = 100\ \frac{DVpO2(MoDPc + 0.7905\ MoThACr)}{MoThACr(20.95 - DVpO2)}, \% \qquad (5.11\text{-}11)$$

Copyright ASME International
Provided by IHS under license with ASME
No reproduction or networking permitted without license from IHS
Not for Resale

$$MoDPc = \frac{MpCb}{1201} + (1 - MFrSc)\frac{MpSF}{3206.4} + MpN2\frac{F}{2801.3} + MoCO2Sb, \text{ moles/mass fuel} \quad (5.11\text{-}12)$$

where

$DVpO2$ = oxygen concentration in the flue gas, percent by volume, dry basis

$MoDPc$ = moles of dry products from the combustion of fuel (CO_2 from carbon burned, actual SO_2 produced (excluding sulfur retained due to SO_2 capture techniques), N_2 from fuel and the dry gas from sorbent, CO_2, moles/mass fuel

$MFrSc$ = mass fraction of sulfur capture, lbm/lbm fuel (kg/kg)

$MoCO2Sb$ = moles of gas from sorbent, moles/lbm fuel (moles/kg). Refer to Section 5.9 for calculation.

5.11.4.2 Calculation of *DVpO2, DVpCO2, DVpSO2, DVpN2f,* and *DVpN2a* on a DRY BASIS When Excess Air Is Known

$$DVpO2 = \frac{XpA\ MoThACr\ 0.2095}{MoDFg}, \% \quad (5.11\text{-}13)$$

$$DVpCO2 = \left(\frac{\frac{MpCb}{12.01} + 100\ MoCO2Sb}{MoDFg}\right), \% \quad (5.11\text{-}14)$$

$$DVpSO2 = \frac{\frac{MpSF}{32.064}(1 - MFrSc)}{MoDFg}, \% \quad (5.11\text{-}15)$$

$$DVpN2f = \frac{\left(\frac{MpN2F}{28.013}\right)}{MoDFg}, \% \quad (5.11\text{-}16)$$

$$DVpN2a = 100 - DVpO2 - DVpCO2 - DVpSO2 - DVpN2f, \% \quad (5.11\text{-}17)$$

$$MoDFg = MoDPc + MoThACr\left(0.7905 + \frac{XpA}{100}\right), \text{ moles/mass fuel} \quad (5.11\text{-}18)$$

where

$DVpCO2$ = carbon dioxide in the flue gas, percent. Note that for comparison to an Orsat analysis, $DVpSO2$ must be added.

$DVpSO2$ = sulfur dioxide in the flue gas, percent volume

$DVpN2f$ = nitrogen from fuel in the flue gas, percent volume. This term is shown separately from the atmospheric nitrogen from the air to note the technical distinction between the two. Since the quantity of nitrogen from the fuel is generally insignificant compared to the nitrogen in the air, calculation of this term is sometimes omitted.

$DVpN2a$ = atmospheric nitrogen (refer to Subsection 5.11.1) in the flue gas, percent volume

$MoDFg$ = moles of dry gas per lbm of fuel as-fired

5.11.4.3 O_2 Analysis on WET BASIS Where the Flue Gas Sample Includes Moisture, Such as In-Situ Monitors and Heated Extractive Systems

$$XpA = 100\left[\frac{VpO2[MoWPc + MoThACr(0.7905 + MoWA)]}{MoThACr(20.95 - VpO2(1 + MoWA))}\right], \% \quad (5.11\text{-}19)$$

$$MoWA = 1.608\ MFrWA, \text{ moles/mole dry air} \quad (5.11\text{-}20)$$

$$MoWPc = MoDPc + \frac{MpH2F}{201.6} + \frac{MpWF}{1801.5} + \frac{MFrWAdz}{18.015} + MoWSb, \text{ moles/lbm fuel} \quad (5.11\text{-}21)$$

where

$MFrWA$ = moisture in air, lbm H_2O/lbm dry air

Copyright ASME International
Provided by IHS under license with ASME
No reproduction or networking permitted without license from IHS
Not for Resale

MoWA = moles of moisture in air, moles H_2O/mole dry air
1.608 = molecular weight of dry air divided by the molecular weight of water
MpWF = H_2O in fuel, percent mass basis
MFrWAdz = additional moisture at location *z*, such as atomizing steam and sootblowing steam, lbm/lbm fuel as-fired. Refer to Subsection 5.12.7. Measured values of steam and fuel flow are usually sufficiently accurate for this calculation. If the mass flow rate of fuel is reiterated based on calculated efficiency, this item should be included.
MoWPc = *MoDPc* plus moles of wet products from the combustion from fuel, plus the wet products from sorbent, plus any additional moisture, moles/mass fuel
VpO2 = oxygen concentration in the flue gas, percent by volume, wet basis
MoWSb = total water from sorbent, moles/lbm fuel. Refer to Section 5.9.

5.11.4.4 Calculation of *VpO2, VpCO2, VpSO2, VpH$_2$O, VpN2f,* and *VpN2a* on a WET BASIS When Excess Air Is Known

$$VpO2 = \frac{XpA\ MoThACr\ 0.2095}{MoFg},\ \% \qquad (5.11\text{-}22)$$

$$VpCO2 = \left(\frac{\frac{MpCb}{12.01} + 100\ MoCO2Sb}{MoFg}\right),\ \% \qquad (5.11\text{-}23)$$

$$VpSO2 = \frac{\frac{MpSF}{32.064}(1 - MFrSc)}{MoWG},\ \% \qquad (5.11\text{-}24)$$

$$VpH2O = \left[\frac{MpH2F}{2.016} + \frac{MpH2OF}{18.015} + \frac{MFrWAdz}{0.18015} + 100\ MoWSb + \left(100 + XpA\right) MoThACr\ MoWA\right] \Big/ MoFg,\ \% \qquad (5.11\text{-}25)$$

$$VpN2f = \frac{\left(\frac{MpN2F}{28.013}\right)}{MoFg},\ \% \qquad (5.11\text{-}26)$$

$$VpN2a = 100 - VpO2 - VpCO2 - VpSO2 - VpH2O - VpN2f,\ \% \qquad (5.11\text{-}27)$$

$$MoFg = MoWPc + MoThACr\left[0.7905 + MoWA + \frac{XpA}{100}(1 + MoWA)\right] \qquad (5.11\text{-}28)$$

where
MoFg = moles of wet gas per lbm fuel as-fired

5.11.5 *MqDAz* — Dry Air, lbm/Btu (kg/J). The quantity of dry air entering the steam generator ahead of location *z* is calculated from the excess air determined to be present at location *z* as follows:

$$MqDAz = MqThACr\left(1 + \frac{XpAz}{100}\right),\ \text{lbm/Btu (kg/J)} \qquad (5.11\text{-}29)$$

$$MFrDAz = MFrThACr\left(1 + \frac{XpAz}{100}\right),\ \text{lbm/lbm fuel (kg/kg)} \qquad (5.11\text{-}30)$$

5.11.6 *MrAz* — Wet Air, lbm/h (kg/s). The quantity of wet air at any location *z* is, the sum of the dry air plus moisture in air:

$$MqAz = (1 + MFrWA)\ MqDAz,\ \text{lbm/Btu (kg/J)} \qquad (5.11\text{-}31)$$

$$MrAz = MqAz\ QrF,\ \text{lbm/h (kg/s)} \qquad (5.11\text{-}32)$$

where
QrF = input from fuel, Btu/h (W)

Copyright ASME International
Provided by IHS under license with ASME
No reproduction or networking permitted without license from IHS
Not for Resale

Note that to determine the air mass flow rate leaving the air heaters (to the burners), the excess air leaving the boiler or economizer must be reduced by the estimated amount of setting infiltration.

5.11.7 *DnA* — Density of Air, lbm/ft³ (kg/m³). The density of wet air is calculated using the ideal gas relationship:

$$DnA = \frac{C1(C2\ Pa + PAz)}{Rk\ (C3 + TAz)},\ \text{lbm/ft}^3\ (\text{kg/m}^3) \qquad (5.11\text{-}33)$$

$$Rk = \frac{R}{Mwk}, \frac{\text{ft} \cdot \text{lbm}}{\text{lbm} \cdot \text{R}}\left(\frac{\text{J}}{\text{kg} \cdot \text{K}}\right) \qquad (5.11\text{-}34)$$

$$MwA = \frac{1 + MFrWA}{\frac{1}{28.963} + \frac{MFrWA}{18.015}},\ \text{lbm/mole (kg/mole)} \qquad (5.11\text{-}35)$$

where

R = universal molar gas constant, 1,545 ft · lbf/lbm-mole · R (8314.5 J/kg · mole · K)

Rk = specific gas constant for gas k, $\frac{\text{ft} \cdot \text{lbf}}{\text{lbm} \cdot \text{R}}\left(\frac{\text{J}}{\text{kg} \cdot \text{K}}\right)$

MwA = molecular weight of wet air, lbm/mole (kg/mole)

Pa = barometric pressure, psia (Pa). To convert in. Hg to psia, divide by 2.0359.

PAz = static pressure of air at point z, in. wg (Pa)

TAz = temperature of air at point z, °F (°C)

$C1$ = 5.2023 lbf/ft (US Customary), 1.0 J/m³ (SI)

$C2$ = 27.68 in. wg/psi (US Customary), 1.0 Pa/Pa (SI)

$C3$ = 459.7°F (US Customary), 273.2°C (SI)

5.12 FLUE GAS PRODUCTS

Flue gas quantity is calculated stoichiometrically from the fuel analysis and excess air. Computations are not valid if significant quantities (in comparison to flue gas weight) of unburned hydrogen or other hydrocarbons are present in the flue gas.

The total gaseous products are referred to as "wet flue gas." Solid products, such as ash from the fuel, unburned carbon, and spent sorbent, are considered separately and are not a part of the wet flue gas mass. Wet flue gas is required for calculations such as air heater leakage, hot air quality control equipment energy losses and draft loss corrections. The total gaseous products excluding moisture are referred to as "dry flue gas," and are used in the energy balance efficiency calculations. The general logic of this Section is that wet flue gas is the sum of the wet gas from fuel (fuel less ash, unburned carbon and sulfur captured), combustion air, moisture in the combustion air, and any additional moisture, such as atomizing steam and moisture and gas added from the addition of sorbent. Dry flue gas is determined by subtracting all moisture from the wet flue gas.

5.12.1 *MqFgF* — Wet Gas From Fuel, lbm/Btu (kg/J)

$$MqFgF = \frac{(100 - MpAsF - MpUbC - MFrSc\ MpSF)}{100\ HHVF},$$

$$\text{lbm/Btu (kg/J)} \qquad (5.12\text{-}1)$$

where

$MpAsF$ = ash in fuel, percent mass

$MpUbC$ = unburned carbon, percent mass

$MFrSc$ = mass fraction of sulfur capture, lbm/lbm (kg/kg)

$MpSF$ = sulfur in fuel, percent mass

5.12.2 *MqWF, MqWvF* — Moisture From H_2O (water) in Fuel, lbm/Btu (kg/J)

$$MqWF = \frac{MpWF}{100\ HHVF},\ \text{lbm/Btu (kg/J)} \qquad (5.12\text{-}2)$$

where $MpWF$ is the water in the fuel, percent mass.

For gaseous fuels, moisture is assumed to be in a vaporous state. Water vapor from fuel ($MpWvF$) must be accounted for separately from liquid water for the energy balance calculations.

5.12.3 *MqWH2F* — Moisture From the Combustion of Hydrogen in the Fuel, lbm/Btu (kg/J)

$$MqWH2F = \frac{8.937\ MpH2F}{100\ HHVF},\ \text{lbm/Btu (kg/J)} \qquad (5.12\text{-}3)$$

5.12.4 *MqCO2Sb* — Gas From Sorbent, lbm/Btu (kg/J)

Copyright ASME International
Provided by IHS under license with ASME
No reproduction or networking permitted without license from IHS
Not for Resale

$$MqCO2Sb = \frac{MFrCO2Sb}{HHVF}, \text{ lbm/Btu (kg/J)} \quad (5.12\text{-}4)$$

5.12.5 *MqWSb* — Water From Sorbent, lbm/Btu (kg/J)

$$MqWSb = \frac{MFrWSb}{HHVF}, \text{ lbm/Btu (kg/J)} \quad (5.12\text{-}5)$$

5.12.6 *MqWAz* — Moisture in Air, lbm/Btu (kg/J). Moisture in air is proportional to excess air and must be calculated for each location z where excess air is determined.

$$MqWAz = MFrWA\ MqDAz, \text{ lbm/Btu (kg/J)} \quad (5.12\text{-}6)$$

5.12.7 *MqWAdz* — Additional Moisture in Flue Gas, lbm/Btu (kg/J). This item accounts for any moisture added to the flue gas not accounted for above. Typical sources are atomizing steam and sootblowing steam. Additional moisture measured on a mass flow basis is converted to a mass per unit mass of fuel basis for the stoichiometric calculations. For the initial calculations, either the measured or an estimated fuel rate is used. Where the quantity of additional moisture is small compared to the total moisture, this is usually sufficiently accurate. If the efficiency calculations are reiterated for other purposes, the mass fraction of additional moisture with respect to mass rate of fuel should be also corrected:

$$MqWAdz = \frac{MFrWAdz}{HHVF}, \text{ lbm/Btu (kg/J)} \quad (5.12\text{-}7)$$

$$MFrWAdz = \frac{MrStz}{MrF}, \text{ lbm/lbm fuel (kg/kg)} \quad (5.12\text{-}8)$$

where $MrStz$ is the summation of the measured additional moisture sources entering the steam generator upstream of location z, lbm/h.

Moisture due to evaporation of water in the ash pit is considered negligible with regard to the mass flow rate of flue gas, and ignored in this calculation. However, if measured, it should be included here.

5.12.8 *MqWFgz* — Total Moisture in Flue Gas, lbm/Btu (kg/J). The total moisture in flue gas at any location z is the sum of the individual sources:

$$MqWFgz = MqWF + MqWvF + MqWH2F + MqWSb + MqWAz + MqWAdz, \text{ lbm/Btu (kg/J)} \quad (5.12\text{-}9)$$

5.12.9 *MqFgz* — Total Wet Flue Gas Weight, lbm/Btu (kg/J). The total wet gas weight at any location z is the sum of the dry air, moisture in air, wet gas from the fuel, gas from sorbent, water from sorbent and any additional moisture:

$$MqFgz = MqDAz + MqWAz + MqFgF + MqCO2Sb + MqWSb + MqWAdz, \text{ lbm/Btu (kg/J)} \quad (5.12\text{-}10)$$

The mass flow rate of wet flue gas at any location z may be calculated from:

$$MrFgz = MqFgz\ QrF = MqFgz\ MrF\ HHVF, \text{ lbm/h (kg/s)} \quad (5.12\text{-}11)$$

5.12.10 *MqDFgz* — Dry Flue Gas Weight, lbm/Btu (kg/J). The dry flue gas weight is the difference between the wet flue gas and the total moisture:

$$MqDFgz = MqFgz - MqWFgz, \text{ lbm/Btu (kg/J)} \quad (5.12\text{-}12)$$

5.12.11 *MpWFgz* — Moisture in Flue Gas, percent mass. The percent moisture in wet flue gas is required for determining the flue gas enthalpy:

$$MpWFgz = 100\ \frac{MqWFgz}{MqFgz}, \%\text{ mass} \quad (5.12\text{-}13)$$

5.12.12 *MpRsFg* — Residue (Solids) in Flue Gas, percent mass. The solids in flue gas add to the enthalpy of flue gas. When the mass of residue exceeds 15 lbm/MBtu input from fuel or when sorbent is utilized, the mass of solids in gas should be accounted for:

$$MpRsFgz = \frac{MpRsz\ MFrRs}{MqFgz\ HHVF}, \%\text{ mass} \quad (5.12\text{-}14)$$

where $MpRsz$ is the percent of total residue (solids) in the flue gas at location z, percent wet gas.

5.12.13 *DnFg* — Density of Wet Flue Gas, lbm/ft³ (kg/m³). The density of wet flue gas is calculated using the ideal gas relationship. Refer to Section 5.11

Copyright ASME International
Provided by IHS under license with ASME
No reproduction or networking permitted without license from IHS
Not for Resale

for calculation of the flue gas constituents on a volumetric basis and calculation of the density of air:

$$DnFgz = \frac{C1(C2\ Pa + PFg)}{Rk(C3 + TFg)},\ \text{lbm/ft}^3\ (\text{kg/m}^3) \quad (5.12\text{-}15)$$

$$Rk = \frac{R}{MwFg}, \frac{\text{ft} \cdot \text{lbf}}{\text{lbm} \cdot \text{R}} \left(\frac{\text{J}}{\text{kg} \cdot \text{K}}\right) \quad (5.12\text{-}16)$$

When the flue gas constituents have been calculated on a wet basis, the molecular weight of wet flue gas is calculated as follows:

$$MwFg = 0.32\ VpO2 + 0.4401\ VpCO2 + 0.64064\ VpSO2 + 0.28013\ VpN2F + 0.28158\ VpN2a + 0.18015\ VpH2O,\ \text{mass/mole} \quad (5.12\text{-}17)$$

When the flue gas constituents have been calculated on a dry basis, the molecular weight of wet flue gas can be calculated as follows:

$$MwFg = MwDFg \frac{MoDFg}{MoFg},\ \text{lbm/mole (kg/mole)} \quad (5.12\text{-}18)$$

$$MwDFg = 0.32\ DVpO2 + 0.4401\ DVpCO2 + 0.64063\ DVpSO2 + 0.28013\ DVpN2F + 0.28158\ DVpN2a + 0.18015\ DVpH2O,\ \text{mass/mole} \quad (5.12\text{-}19)$$

$$DVpH2O = 100 \frac{MoFg - MoDFg}{MoDFg},\ \%O_2\ \text{dry} \quad (5.12\text{-}20)$$

where

R = universal molar gas constant, 1,545 ft · lbf/lbm-mole · R (8,314.5 J/kg-mole · K)
Rk = specific gas constant for gas k, $\frac{\text{ft} \cdot \text{lbf}}{\text{lbm} \cdot \text{R}}$ (J/kg · K)
$MwFg$ = molecular weight of wet flue gas, lbm/mole (kg/mole)
$MwDFg$ = molecular weight of dry flue gas, lbm/mole (kg/mole)
Pa = barometric pressure, psia (Pa). To convert in. Hg to psia, divide by 2.0359.
$PFgz$ = static pressure of flue gas at point z, in. wg (Pa)
$TFgz$ = temperature of flue gas at point z, °F (°C)
$MoDFg$ = moles dry gas. Refer to Eq. (5.11-18) for calculation.
$MoFg$ = moles wet gas. Refer to Eq. (5.11-28) for calculation.
$C1$ = 5.2023 lbf/ft (US Customary), 1.0 J/m^3 Pa (SI)
$C2$ = 27.68 in. wg/psi (US Customary), 1.0 Pa/Pa (SI)
$C3$ = 459.7°F (US Customary), 273.2°C (SI)

5.13 AIR AND FLUE GAS TEMPERATURE

5.13.1 *TRe* — Reference Temperature, °F (°C). The reference temperature is the base temperature to which streams (air, fuel, and sorbent) entering the steam generator envelope are compared for calculation of sensible heat losses and credits. The reference temperature for this Code is 77°F (25°C).

5.13.2 *TMnAEn* — Average Entering Air Temperature, °F (°C). The air temperature entering the steam generator envelope is required to calculate the credit due to the difference between the entering air temperature and the reference temperature. When air preheating coils are utilized and the energy is supplied from outside the envelope, the entering air temperature is the temperature leaving the air preheating coils (*TA8*). When the energy to an air preheating coil is supplied from within the envelope (steam from the steam generator), the entering air temperature is the temperature entering the air preheating coils (*TA7*). When there is more than one fan of the same type, such as two forced draft fans, it is normally sufficiently accurate to assume balanced air flows between the fans and use the arithmetic average of the air temperatures in each stream. When there is evidence of unbalance, weighted averages should be used. When there is more than one source of air entering at different temperatures, the average entering air temperature must be determined. The general philosophy for determining the mass fraction of individual streams is that all air streams may be measured or some streams may be measured (and/or calculated by energy balance) and the balance calculated by difference from the total air flow (calculated

Copyright ASME International
Provided by IHS under license with ASME
No reproduction or networking permitted without license from IHS
Not for Resale

stoichiometrically). It should be noted that some amount of air (usually not more than 2 or 3% at full load) enters the unit as leakage through the setting and the actual temperature is indeterminate. Unless otherwise specified or agreed to by the parties to the test, the infiltration air is considered to enter the unit at the same temperature as the measurable air streams and the uncertainty accounted for in the measurement bias.

Typical examples of units with multiple air sources are pulverized coal fired units with cold primary air fans (*TA8A*) or pulverizer tempering air supplied from the environment (*TA5*). The weighted average air temperature entering the unit *TMnAEn*, must be calculated:

$$TMnAEn = MFrAz1\ TAz1 + MFrAz2\ TAz2 \ldots + MFrAzi\ TAzi, \text{ °F (°C)} \quad (5.13\text{-}1)$$

When the entering air temperature at the various locations differs significantly, it is more correct to determine the average entering air temperature from the average entering enthalpy of the entering air:

$$HMnAEn = MFrAz1\ HAz1 + MFrAz2\ HAz2 \ldots + MFrAzi\ HAzi, \text{ Btu/lbm (J/kg)} \quad (5.13\text{-}2)$$

where

HMnAEn = average enthalpy of wet air entering the boundary, Btu/lbm (J/kg). The average air temperature is determined from the average enthalpy.

MFrAz = mass flow rate fraction of wet air entering at location *z* to total wet air flow leaving the steam generator based on excess air at location (14), lbm/lbm (kg/kg)

TAz = temperature of wet air at location *z*, °F (°C)

HAz = enthalpy of wet air at temperature *TAz*, Btu/lbm (J/kg)

For pulverized coal units with cold primary air fans, the mass flow fraction of the primary air, *MFrA11*, may be calculated as follows:

$$MFrA11 = \frac{MrA11}{MqA14\ MrF\ HHVF}, \quad \text{lbm/lbm (kg/kg)} \quad (5.13\text{-}3)$$

where

MrF = fuel mass flow rate, lbm/h (kg/s). Estimate or use the measured mass flow rate initially. The efficiency calculations are repeated until the estimated and calculated fuel mass flow rates are within the convergence tolerance of Subsection 5.7.3.

MqA14 = total wet air entering steam generator envelope upstream of location (14), lbm/Btu (kg/J)

MrA11 = measured primary air flow to pulverizers, lbm/h (kg/s)

where secondary air is the only other significant source of air, the mass flow fraction of the remaining air equals (1 – *MFrA11*). For the equation above, it is assumed that the tempering air to the pulverizers is the same temperature as the air entering the primary air heater. Refer to the tempering air calculation below if it is not.

For units with hot primary air fans or exhauster fans, and where pulverizer tempering air is supplied from the environment (*TA5*), the mass flow rate of the tempering air may be calculated as follows:

$$MFrA5 = \frac{MrA5}{MqA14\ MrF\ HHVF}, \quad \text{lbm/lbm (kg/kg)} \quad (5.13\text{-}4)$$

$$MrA5 = \frac{MrA11(HA9A - HA11)}{HA9A - HA5}, \quad \text{lbm/h (kg/s)} \quad (5.13\text{-}5)$$

where

MrA5 = pulverizer tempering air mass flow rate, lbm/h (kg/s)

5.13.3 *TFgLvCr* — Corrected Gas Outlet Temperature (Excluding Leakage), °F (°C). On units with air heaters, air leakage within the air heater depresses the exit gas temperature without performing any useful work. For the efficiency calculations, the measured gas temperature leaving the air heater must be corrected to the temperature that would exist if there were no air heater leakage, *TFgLvCr*.

The correction calculation method below utilizes the nomenclature and products of combustion calculated in the preceding Section. Refer to Appendix C for the derivation of the Eq. (5.13-6). For alternate calculation methods, refer to PTC 4.3, Air Heaters.

When there are two or more air heaters with approximately the same gas flow through each, the air and gas temperatures may be averaged, and one corrected

Copyright ASME International
Provided by IHS under license with ASME
No reproduction or networking permitted without license from IHS
Not for Resale

gas temperature calculated. However, when there are two or more air heaters with different gas flows, such as a primary and secondary air heater, the corrected gas temperature must be calculated separately for each and a weighted average used for efficiency. Refer to Subsection 5.13.4 below.

$$TFgLvCr = TFgLv + \frac{MnCpA}{MnCpFg}\left(\frac{MqFgLv}{MqFgEn} - 1\right) \times (TFgLv - TAEn),\ °F\ (°C) \quad (5.13\text{-}6)$$

$$MnCpA = \frac{HATFgLv - HAEn}{TFgLv - TAEn},\ \text{Btu/lbm F (J/kg K)} \quad (5.13\text{-}7)$$

where

MnCpA = mean specific heat of *wet* air between *TAEn* and *TFgLv*, Btu/lbm, °F (J/kg K). This is equal to the enthalpy of wet air at the measured gas outlet temperature minus the enthalpy of wet air at the air inlet temperature divided by the temperature difference.

MnCpFg = mean specific heat of *wet* flue gas between *TGLv* and *TFgLvCr*, Btu/lbm, °F (J/kg K). If using the curves of Section 5.19 (as opposed to the computer code that calculates specific heat), use the *instantaneous* specific heat for the mean temperature.

TAEn = air temperature entering the air heater, °F (°C). Location (7), (7A), (8), or (8A), Figs. 1.4-1 through 1.4-7. For air heaters that have two air inlets and one gas outlet (a trisector air heater, for example), this item is the weighted average of the air temperature leaking to the gas side of the air heater. Use the manufacturer's estimated leakage split to calculate the average air temperature of the leakage air.

TFgLv = gas temperature leaving the air heater, °F (°C). Location (15) or (15A), Figs. 1.4-1 through 1.4-7.

MqFgEn = wet gas weight entering the air heater from Subsection 5.12.8 using the excess air entering the air heater, lbm/Btu

MqFgLv = wet gas weight leaving the air heater from Subsection 5.12.8 using the excess air leaving the air heater, lbm/Btu

5.13.4 *TMnFgLvCr* — Average Exit Gas Temperature (Excluding Leakage), °F (°C). The average exit gas temperature (excluding leakage) is used to calculate the losses associated with constituents leaving the unit in the flue gas (e.g., dry gas loss, water from fuel loss, etc.). On units where the flue gas exits at more than one location, the weighted average gas temperature must be determined. The general philosophy for determining the mass fraction of individual flue gas streams is that all gas streams may be measured or some streams may be measured (and/or calculated by energy balance) and the balance calculated by difference from the total (calculated stoichiometrically). On units with two or more air heaters of the same type and size, it is normally sufficiently accurate to assume equal gas flows, and use the arithmetic average of the gas temperature leaving each air heater (excluding leakage), *TFgLvCr*. When there is evidence of unbalance, weighted averages should be used. For units with multiple air heaters not of the same type where the gas mass flow *and* gas temperature leaving the air heaters is not the same, for example, separate primary and secondary air heaters for pulverized coal fired units with cold primary air fans, the gas flow distribution between the air heaters must be determined to calculate a weighted average exit gas temperature (excluding leakage). On some units, gas may be extracted upstream of the air heater(s) or other stream generator heat trap(s) and must be included in the determination of the average exit gas temperature.

The following addresses pulverized coal fired units with separate primary air heater(s) (used to heat the air to the pulverizers) and secondary air heater(s) and is a typical example of how the calculations for two different types of air heaters might be handled. The methodology is based upon measuring the primary air flow to the pulverizers and calculating the gas flow through the primary air heaters by energy balance:

$$TMnFgLvCr = MFrFg14B\ TFg15BCr + (1 - MFrFg14B)TFg15ACr,\ °F\ (°C) \quad (5.13\text{-}8)$$

When there is a significant difference in the gas temperature at the various exiting locations, the average gas temperature, *TMnFgLvCr*, should be determined from the average enthalpy of the exiting wet gas:

Copyright ASME International
Provided by IHS under license with ASME
No reproduction or networking permitted without license from IHS
Not for Resale

$$HMnFgLvCr = MFrFg14B\ HFg15BCr + (1 - MFrFg14B)HFg15ACr, \quad (5.13\text{-}9)$$

Btu/lbm (J/kg)

$$MFrFg14B = \frac{MrFg14B}{MqFg14\ MrF\ HHVF}, \quad (5.13\text{-}10)$$

lbm/lbm (kg/kg)

where

HMnFgLvCr = average enthalpy of wet gas leaving the boundary (excluding leakage), Btu/lbm (J/kg). The average temperature is determined from the average enthalpy.

MFrFg14B = mass fraction of wet gas entering the primary air heater to total wet gas entering the air heaters, lbm/lbm (kg/kg)

MqFg14 = total wet gas entering air heaters, Subsection 5.12.8, lbm/Btu (kg/J)

MrF = fuel mass flow rate, lbm/h (kg/s). Estimate or use the measured mass flow rate initially. Refer to Subsection 5.7.3 regarding convergence tolerance.

MrFg14B = mass flow rate of wet gas entering the primary air heater, lbm/h (kg/s). This item may be calculated by energy balance.

$$MrFg14B = MrA11 \frac{(HA11 - HA8A)}{(HFg14B - HFg15BCr)}, \quad (5.13\text{-}11)$$

lbm/h (kg/s)

where

MrA11 = measured primary air mass flow rate, lbm/h (kg/s)

HFg15BCr = enthalpy of wet gas for the gas temperature leaving the primary air heater excluding leakage (corrected), using the moisture in wet gas entering the air heater

HA11 = average enthalpy of wet air entering pulverizers. If the pulverizers are not operating at the same primary air flow, this should be a flow weighted average rather than an arithmetic average.

5.14 LOSSES

The calculation of losses falls into two categories in accordance with the method in which they are measured and conveniently calculated. In the first category are losses that are a function of input from fuel and can be readily expressed in terms of loss per unit of input from fuel, i.e., expressed as a percentage of fuel input. Losses due to products of combustion (dry gas, water from fuel, etc.), are expressed in these units. In the second category are losses not related to fuel input, which are more readily calculated on an energy per unit of time basis, such as the loss due to surface radiation and convection. The losses in each category are grouped generally in order of significance and universal applicability with applicability taking preference.

The logic for calculating losses that are a function of fuel input is described below:

$$QpLk = 100\ Mqk \times (HLvk - HRek) = 100\ Mqk \times MnCpk \times (TLvk - TRe),\ \% \quad (5.14\text{-}1)$$

$$QpLk = 100 \times \frac{\text{lbm constituent}}{\text{Btu fuel input}} \times \frac{\text{Btu}}{\text{lbm °F}} \times \text{°F} = \frac{\text{Btu loss}}{\text{100 Btu In}},\ \% \quad (5.14\text{-}2)$$

where

QpLk = loss from constituent *k*, percent of input from fuel, Btu/100 Btu input from fuel (J/100 J)

Mqk = mass of constituent *k* per Btu input in fuel. This is the unit system used throughout this Code for items that are related to the fuel such as air and gas quantities.

TLvk = temperature of constituent *k* leaving the steam generator envelope, °F (°C)

TRe = reference temperature, °F (°C). The reference temperature is 77°F (25°C).

MnCpk = mean specific heat of constituent *k* between temperatures *TRe* and *TLvk*, Btu/lbm, °F (J/kg · K). Whenever practical, enthalpy is used in lieu of the mean specific heat and the difference in temperature.

HLvk = enthalpy of constituent *k* at temperature *TLvk*, Btu/lbm (J/kg)

HRek = enthalpy of constituent *k* at temperature *TRe*, Btu/lbm (J/kg). For water that enters the steam generator envelope as liquid

Copyright ASME International
Provided by IHS under license with ASME
No reproduction or networking permitted without license from IHS
Not for Resale

and leaves the envelope as steam (water vapor), the ASME Steam Tables are used for enthalpy and are based on a 32°F reference temperature for enthalpy. The enthalpy of water at *TRe* is 45 Btu/lbm (105 kJ/kg). For all other constituents, the enthalpy is based upon the Code reference temperature of 77°F (25°C). Thus, the reference enthalpy is zero and does not appear in the loss/credit energy balance equation as shown above.

5.14.1 *QpLDFg* — Dry Gas Loss, percent

$$QpLDFg = 100\ MqDFg\ HDFgLvCr,\ \%\qquad (5.14\text{-}3)$$

where

MqDFg = dry gas mass flow leaving the steam generator based on the excess air at location (13) or (14). Note that when hot air quality control equipment (e.g., precipitator) is located between the steam generator exit and the air heater gas inlet, there may be a dry gas loss due to air infiltration. This loss is included in the loss calculated for the hot AQC equipment.

HDFgLvCr = enthalpy of dry gas at the temperature leaving the boundary corrected for leakage (excluding leakage). Refer to Subsection 5.19.3 for curve fit.

5.14.2 *QpLH2F, QpLWF, QpLWvF* — Water From Fuel Losses, percent

5.14.2.1 Loss Due to Water Formed From the Combustion of H_2 in the Fuel

$$QpLH2F = 100\ MqWH2F\ (HStLvCr - HWRe),\ \%\qquad (5.14\text{-}4)$$

5.14.2.2 Loss Due to Water (H_2O) in a Solid or Liquid Fuel.

This may also be applicable to manufactured gaseous fuels:

$$QpLWF = 100\ MqWF\ (HStLvCr - HWRe),\ \%\qquad (5.14\text{-}5)$$

5.14.2.3 Loss Due to Water Vapor in a Gaseous Fuel

$$QpLWvF = 100\ MqWvF\ HWvLvCr,\ \%\qquad (5.14\text{-}6)$$

where

HStLvCr = enthalpy of steam (water vapor) at 1 psia at temperature *TFgLvCr* or *TMnFgLvCr*. The enthalpy of steam (water vapor) does not vary significantly at the low partial pressures of water vapor in air or flue gas, and thus, specifically calculating the actual partial pressure of water vapor is not warranted. Refer to Subsection 5.19.5 for curve fit.

HWvLvCr = enthalpy of water vapor at *TFgLvCr* or *TMnFgLvCr*, Btu/lbm (J/kg). The distinction of enthalpy of steam (*HSt*) versus the enthalpy of water vapor (*HWv*), is that *HSt* is the enthalpy of *vapor* with respect to *liquid* water at 32°F (0°C) as the reference in accordance with ASME Steam Tables, and includes the latent heat of vaporization of water, where *HWv* is the enthalpy of water *vapor* with respect to the enthalpy of water *vapor* at 77°F (25°C) as the reference (which is zero). Refer to Subsection 5.19.4 for curve fit.

HWRe = enthalpy of water at the reference temperature *TRe*, Btu/lbm (J/kg)

HWRe = *TRe* − 32 = 45, Btu/lbm

5.14.3 *QpLWA* — Loss Due to Moisture in Air, percent

$$QpLWA = 100\ MFrWA\ MqDA\ HWLvCr,\ \%\qquad (5.14\text{-}7)$$

where

MqDA = mass of dry air corresponding to the excess air used for dry gas loss, lbm/Btu (kg/J)

5.14.4 *QpLSmUb* — Summation of Losses Due to Unburned Combustibles, percent.

The loss due to unburned combustibles is the sum of the applicable losses for the individual unburned constituents.

5.14.4.1 Loss Due to Unburned Carbon in Residue, percent

$$QpLUbC = MpUbC\ \frac{HHVCRs}{HHVF},\ \%\qquad (5.14\text{-}8)$$

where *HHVCRs* is the heating value of carbon as it occurs in residue.

When unburned hydrogen in the residue is considered insignificant (normal case, refer to unburned hydrogen

Copyright ASME International
Provided by IHS under license with ASME
No reproduction or networking permitted without license from IHS
Not for Resale

below), a value of 14,500 Btu/lbm (33,700 kJ/kg) should be used for *HHVCRs*. Any unburned carbon is expected to be in an amorphous form. The *NBS Technical Notes* does not list the heat of formation of carbon in the amorphous form; only the heats of formation of carbon in the graphite and diamond forms are listed [2]. The higher heating value for carbon in the residue adopted by ASME PTC 4.1-1964 has been retained in this Code. When it is determined that unburned hydrogen is present in the residue and is accounted for separately, a value of 14,100 Btu/lbm (32,800 kJ/kg) shall be used based on the heat of formation of CO_2.

5.14.4.2 Loss Due to Unburned Hydrogen in Residue, percent. Refer to Subsection 5.10.3. Where it is established that unburned hydrogen is present and cannot be eliminated by operating adjustments:

$$QpLH2Rs = \frac{MrRs\ MpH2Rs\ HHVH2}{MrF\ HHVF}, \%\qquad (5.14\text{-}9)$$

where *MpH2Rs* is the mass weighted average of unburned hydrogen in residue, percent, and *HHVH2* = 61,100 Btu/lbm (142,120 kJ/kg).

5.14.4.3 Loss Due to Carbon Monoxide in Flue Gas, percent

$$QpLCO = DVpCO\ MoDFg\ MwCO\ \frac{HHVCO}{HHVF}, \%$$

or (5.14-10)

$$QpLCO = VpCO\ MoFg\ MwCO\ \frac{HHVCO}{HHVF}, \%$$

where

DVpCO = quantity of CO measured on a dry basis, percent volume

VpCO = quantity of CO measured on a wet basis, percent volume

MoDFg = moles of dry gas with excess air measured at the same location as the CO, moles/lbm fuel (moles/kg). Refer to Section 5.11 for calculation.

MoFg = moles of wet gas with excess air measured at the same location as the CO, moles/lbm fuel (moles/kg). Refer to Section 5.11 for calculation.

MwCO = molecular weight CO, 28.01 lbm/mole (kg/mole)

HHVCO = higher heating value of CO, 4,347 Btu/lbm (10,111 kJ/kg)

5.14.4.4 Loss Due to Pulverizer Rejects, percent. This loss includes the chemical and sensible heat loss in pulverizer rejects:

$$QpLPr = 100\ MqPr\ (HHVPr + HPr), \%\qquad (5.14\text{-}11)$$

$$MqPr = \frac{MrPr}{MrF\ HHVF}, \text{ lbm/Btu (kg/J)}\qquad (5.14\text{-}12)$$

where

MrPr = measured mass flow rate of pulverizer rejects, lbm/h (kg/s)

HHVPr = higher heating value of pulverizer rejects from laboratory analysis of representative sample, Btu/lbm (J/kg)

HPr = sensible heat or enthalpy of pulverizer rejects leaving the pulverizer, Btu/lbm (J/kg). Use the enthalpy of ash at the mill outlet temperature.

5.14.4.5 Loss Due to Unburned Hydrocarbons in Flue Gas, percent. Where it is established that unburned hydrocarbons are present and cannot be eliminated by operating adjustments:

$$QpLUbHc = DVpHc\ MoDFg\ MwHc\ \frac{HHVHc}{HHVF}, \%$$

or (5.14-13)

$$QpLUbHc = VpHc\ MoFg\ MwHc\ \frac{HHVHc}{HHVF}, \%$$

where

DVpHc = quantity of hydrocarbons in flue gas measured on a dry basis, percent volume

VpHc = quantity of hydrocarbons in flue gas measured on a wet basis, percent volume

HHVHc = higher heating value of the reference gas used to determine the volume percentage of total hydrocarbons, Btu/lbm (J/kg)

5.14.5 *QpLRs* — Loss Due to Sensible Heat of Residue, percent. For units with a wet furnace ash hopper, refer to Subsection 5.14.13:

$$QpLRs = 100\ \Sigma\ MqRsz\ HRsz, \%\qquad (5.14\text{-}14)$$

where

MqRsz = mass flow rate of residue at location *z*, lbm/Btu

Copyright ASME International
Provided by IHS under license with ASME
No reproduction or networking permitted without license from IHS
Not for Resale

(kg/J) from Section 5.10. For units with a wet furnace ash hopper, when the total ash pit losses are tested, the wet ash pit loss, *QrLAp,* includes the sensible heat of residue, and the sensible heat of residue to the ash hopper should be omitted here. When the loss due to radiation to the wet ash pit is estimated, *QrLRsAp,* the loss due to sensible heat in residue leaving the ash pit is calculated in accordance with this paragraph.

HRsz = enthalpy of residue at location *z*, Btu/lbm (J/kg). For locations other than bottom ash, the residue can be assumed to be at gas temperature. For dry bottom ash, use 2,000°F (1,100°C) if not measured. For wet bottom ash, a typical enthalpy of 900 Btu/lbm (2,095 kJ/kg) is recommended. Refer to Subsection 5.19.3 for curve fit.

5.14.6 *QpLAq* — Loss From Hot Air Quality Control Equipment, percent. This item refers to flue gas cleanup equipment located between the boiler exit and air heater gas inlet, such as a mechanical dust collector or hot precipitator. The calculation below is the total of the dry gas loss due to air infiltration, moisture in infiltration air loss, and surface radiation and convection loss. Refer to Appendix C for derivation.

$$QpLAq = 100\,[MqFgEn\,(HFgEn - HFgLv) - (MqFgLv - MqFgEn)\,(HAAqLv - HALvCr)],\ \% \qquad (5.14\text{-}15)$$

where

MqFgEn = mass of wet gas entering with excess air entering, lbm/Btu (kg/J)

MqFgLv = mass of wet gas leaving with excess air leaving, lbm/Btu (kg/J)

HFgEn = enthalpy of wet gas entering with a moisture content entering and a residue content leaving, Btu/lbm (J/kg)

HFgLv = enthalpy of wet gas leaving with a moisture content entering and a residue content leaving, Btu/lbm (J/kg)

HAAqLv = enthalpy of wet air at a temperature corresponding to the gas temperature leaving the hot AQC device, Btu/lbm (J/kg)

HALvCr = enthalpy of wet air at the average gas temperature (excluding leakage) leaving the steam generator envelope, Btu/lbm (J/kg)

5.14.7 *QpLALg* — Loss Due to Air Infiltration, percent. This item refers to air infiltration between the point where dry gas weight is determined (normally the boiler exit) and the air heater flue gas inlet, excluding air infiltration in hot AQC equipment which is accounted for separately:

$$QpLALg = 100\,MqALg\,(HALvCr - HALgEn),\ \% \qquad (5.14\text{-}16)$$

where

MqALg = mass rate of wet infiltration air, lbm/Btu (kg/J). Refer to Subsection 5.11.6.

HALgEn = enthalpy of infiltrating wet air, normally air inlet temperature, Btu/lbm (J/kg).

5.14.8 *QpLNO$_x$* — Loss Due to the Formation of NO$_x$, percent. This item refers to the loss associated with the formation of NO_x during the combustion process. This loss is usually small, 0.04% for 0.5 lb/million Btu (335 ppm) NO_x, and may be estimated if not measured. This calculation procedure assumes that the analyzer converts the NO_2 in the gas sample to NO and gives a total reading of NO_x as NO. The equations below assume that NO_2 is negligible and are based on the heat of formation of NO. For most units, N_2O is also considered negligible. If measured separately, the loss may be calculated by substituting the heat of formation of N_2O in the equation below:

$$QpLNOx = DVpNOx\,MoDFg\,\frac{HrNOx}{HHVF} \qquad (5.14\text{-}17)$$

$$\text{or } VpNOx\,MoFg\,\frac{HrNOx}{HHVF},\ \%$$

$$QpLNOx = 100\,MqNOx\,\frac{HrNOx}{MwNOx},\ \% \qquad (5.14\text{-}18)$$

where

$DVpNO_x$ = quantity of NO_x as NO on a dry basis, percent volume. NO_x is normally measured on a ppm basis. Divide by 10,000 to convert to percent.

$VpNO_x$ = quantity of NO_x as NO on a wet basis, percent volume

$MqNO_x$ = quantity of NO_x expressed on an energy basis, lbm/Btu (kg/J). When expressed on an energy basis, the units used are usually MBtu (J). Divide by 1E6 to convert to Btu (J).

Copyright ASME International
Provided by IHS under license with ASME
No reproduction or networking permitted without license from IHS
Not for Resale

$MoDFg$ = moles of dry gas with excess air measured at the same location as the NO_x, moles/lbm fuel (moles/kg)

$MoFg$ = moles of wet gas with excess air measured at the same location as the NO_x, moles/lbm fuel (moles/kg)

$HrNO_x$ = heat of formation of NO, 38,600 Btu/lb mole (89,850 kJ/kg). The heat of formation of N_2O is 35,630 Btu/lb mole (82,880 kJ/kg).

$MwNO_x$ = molecular weight of NO, 30.006 lb/mole (kg/mole). The molecular weight of N_2O is 44.013 lb/mole (kg/mole).

5.14.9 *QrLSrc* — Loss Due to Surface Radiation and Convection. This loss is determined indirectly by measuring[2] the average surface temperature of the steam generator and the ambient conditions near it. Surface temperature, ambient temperature, and ambient air velocity should be determined at a sufficient number of locations to determine representative average values. Alternatively, the parties to the test may decide to determine this loss based on the actual area of the unit and the standard surface and ambient conditions described below. The parties to the test shall decide whether to measure the surface and ambient conditions,[3] including the number and location of measurements, or to use the standard conditions described below. Use of surface and ambient conditions as specified for design of unit insulation shall not be permitted for loss evaluation; test conditions or the standard values specified herein are the only allowable options.

The loss is calculated by:

$$QrLSrc = Cl \; \Sigma \, (Hcaz + Hraz) \, Afz \, (TMnAfz - TMnAz), \text{ Btu/h (W)} \qquad (5.14\text{-}19)$$

where

$$Hcaz = \text{the larger of } 0.2 \, (TMnAfz - TMnAz)^{1/3} \text{ or } 0.35 VAz^{4/5} \qquad (5.14\text{-}20)$$

$$Hraz = 0.847 + 2.367\text{E}{-3} \, TDi + 2.94\text{E}{-6} \, TDi^2 + 1.37\text{E}{-9} \, TDi^3 \qquad (5.14\text{-}21)$$

where

$Hcaz$ = convection heat transfer coefficient for area z, Btu/ft^2 · h · F. The constants used in this correlation are based upon using US Customary Units. The characteristic length is approximately 10 ft. A bias uncertainty for the correlation of ±20% is suggested.

$Hraz$ = radiation heat transfer coefficient for area z, Btu/ft^2 · h · F. The constants used in this equation are based upon using US Customary Units (°F). This correlation is based on an ambient temperature of 77°F (25°C) and an emissivity of 0.80. A bias uncertainty for the correlation of ±20% is suggested. The uncertainty includes variations in emissivity and the impact of surrounding objects such as support steel.

Afz = flat projected surface area of the casing/lagging over the insulation (circumferential area for circular surfaces) for location z, ft^2. For protuberances such as buckstays, only the flat projected area of the face adjacent to the hot surface is to be included in the flat projected surface area. The areas to be considered are the steam generator, flues and ducts within the envelope, major piping (i.e., size with respect to the steam generator), and major equipment such as pulverizers. Hot air quality control equipment (such as hot precipitators) should not be included if this loss is accounted for separately.

$TMnAfz$ = average surface temperature of area z

$TMnAz$ = average ambient air temperature at location z, °F. The local ambient air temperature is the temperature within 2 to 5 ft of the surface.

$TDi = (TAfz - TAz)$ = temperature difference

VAz = average velocity of air near surface, typically within 2 to 5 ft of the surface, ft/sec (m/s)

Cl = 1.0 (US Customary Units); Cl = 0.293 W h/Btu (SI Units).

If values for TAf, TA, and VA are not measured, this loss should be calculated using the actual component areas and the following standard values:

[2] "Measure" is used in the general sense in this paragraph and does not preclude estimation of parameters by qualified personnel.

[3] It is not mandatory that this test be performed in conjunction with the efficiency test. It may be performed separately to establish the actual setting heat loss and the results corrected to standard or guarantee conditions in accordance with Section 5.18 for use with an efficiency test performed at a different time. When so used, the corrected $QrLRc$ results shall meet the criteria for repeatability in Section 3.

Copyright ASME International
Provided by IHS under license with ASME
No reproduction or networking permitted without license from IHS
Not for Resale

(a) VA = 1.67 ft/sec (100 ft/min);

(b) TDi, the differential temperature, should be 50°F or, if the situation warrants it for components where personnel safety is not a problem, a larger value used. For example, where it is not practical to design for a temperature differential of 50°F or less (PC piping and hot cyclones, for example), the expected differential should be used.

This calculation method applies to estimation of the efficiency loss and is not intended for use in designing casing insulation. If the standard conditions are used, a bias limit of ± 50% is suggested for *QRLRC.*

5.14.10 *QrLWAd* — Loss Due to Additional Moisture, Btu/h (W). Additional moisture is water or steam injected in the gas side of the steam generator and not accounted for separately. Typical examples of additional moisture are atomizing and soot blowing steam. It is noted that when air is utilized as the atomizing or soot blowing medium, the loss is included in the dry gas and moisture in air loss since it is included in the measured O_2 in the flue gas:

$$QrLWAd = \Sigma\, MrStz(HStLvCr - HWRe), \text{ Btu/h (W)} \quad (5.14\text{-}22)$$

where

MrStz = mass flow rate of additional moisture at location *n*, lbm/h (kg/s)

HStLvCr = enthalpy of steam in gas leaving the boundary (excluding leakage), Btu/lbm (J/kg). Refer to Subsection 5.14.2.

HWRe = enthalpy water at the reference temperature, Btu/lbm (J/kg)

5.14.11 *QrLClh* — Loss Due to Calcination and Dehydration of Sorbent, Btu/h (W)

$$QrLC1h = \Sigma\, MrSbk\ MFrC1hk\ Hrk, \text{ Btu/h (W)} \quad (5.14\text{-}23)$$

where

MrSbk = mass flow rate of reactive constituents *k,* lbm/h (kg/s)

Hrk = heat of reaction for calcination of calcium or magnesium carbonate or dehydration of calcium or magnesium hydroxide

$CaCO_3$ (Cc) 766 Btu/lbm (1,782 kJ/kg)
$MgCO_3$ (Mc) 652 Btu/lbm (1,517 kJ/kg)
$Ca(OH)_2$ (Ch) 636 Btu/lbm (1,480 kJ/kg)
$Mg(OH)_2$ (Mh) 625 Btu/lbm (1,455 kJ/kg)

MFrClhk = mass fraction of calcination of constituent *k.* Refer to Subsection 5.10.8 for $CaCO_3$. Use 1.0 for other constituents.

Heats of reaction were calculated from the heats of formation and the molecular weights given in the *NBS Technical Notes* [2]. $MgCO_3$ is assumed to be in its most common form, dolomite, $CaCO_3 \cdot MgCO_3$.

5.14.12 *QrLWSb* — Loss Due to Water in Sorbent, Btu/h (W)

$$QrLWSb = MrWSb\ (HStLvCr - HWRe), \text{ Btu/h (W)} \quad (5.14\text{-}24)$$

5.14.13 *QrLAp* — Wet Ash Pit Loss, Btu/h (W). On units with a wet ash pit, there is a loss due to heat absorbed by the water from radiation through the furnace hopper throat, in addition to the sensible heat in residue loss. The test procedure for this loss requires the measurement of the mass flow rate and temperature of the water entering and leaving the ash pit, the mass flow rate of the residue/water mixture leaving the ash pit, and a laboratory determination of the water in the residue leaving the ash pit.

Due to the difficulty of determining the mass flow rate of the residue leaving the ash pit and the uncertainty of determining the water in the residue, the parties to the test may agree to estimate this loss. The procedure for estimating this loss is described in Subsection 5.14.13.2

5.14.13.1 *QrLAp* — Wet Ash Pit Loss When Tested. By energy balance, the ash pit loss is the sum of the energy gain by the water leaving the ash pit, energy loss due to evaporation of pit water and sensible heat in the residue/water mixture as it leaves the pit. Note that if measured, the sensible heat loss of residue to the ash pit in Subsection 5.14.5 should be omitted:

$$QrLAp = QrApW + QrApEv + QrRsWLv, \text{ Btu/h (W)} \quad (5.14\text{-}25)$$

5.14.13.1.1 Energy Increase in Ash Pit Water

$$QrApW = MrW39(HW39 - HW38), \text{ Btu/h (W)} \quad (5.14\text{-}26)$$

Copyright ASME International
Provided by IHS under license with ASME
No reproduction or networking permitted without license from IHS
Not for Resale

5.14.13.1.2 Loss Due to Evaporation of Pit Water

$$QrApEv = \left(MrW38 - MrW39 + MrRsW37\left(\frac{MFrWRs}{1 + MfWRs}\right)\right)(HStLvCr - HW38), \text{ Btu/h (W)} \quad (5.14\text{-}27)$$

5.14.13.1.3 Sensible Heat in Residue/Water Mixture Leaving the Ash Pit

$$QrRsWLv = MrRsW\frac{37}{1 + MFrWRs}(HRs37 + MFrWsR\,(HW31 - HW38)), \text{ Btu/h (W)} \quad (5.14\text{-}28)$$

where

$MrRsW37$ = mass flow rate of the residue/water mixture leaving the ash pit, lbm/h (kg/h)

$MFrWRs$ = mass fraction of water in residue in the residue/water mixture leaving location (37), lbm H_2O/lbm dry residue (kg/kg)

$HRs37$ = enthalpy of dry residue at the temperature of the residue/water mixture leaving the ash pit, Btu/lbm (J/kg)

HWz = enthalpy of water at location z, Btu/lbm (J/kg)

5.14.13.2 *QrLAp* — Estimated Loss Due to Radiation to the Ash Pit. If agreed to by the parties to the test, the loss due to radiation to the ash pit may be estimated. When the loss due to radiation to the ash pit is estimated, the sensible heat in residue loss must also be calculated (estimated) in accordance with Subsection 5.14.5.

$$QrLAp = QrAp\,ApAf, \text{ Btu/h (W)} \quad (5.14\text{-}29)$$

where

$QrAp$ = equivalent heat flux through furnace hopper opening absorbed by ash pit water. Based on limited data of apparent water usage, an estimated equivalent heat flux of 10,000 Btu/ft^{2}h (31,500 W/m^2) is recommended. A bias limit of ±50% is suggested.

$ApAf$ = flat projected area of hopper opening, ft^2 (m^2)

5.14.14 *QrLRy* — Loss From Recycled Streams, Btu/h (W). The loss due to recycled streams is the sum of the loss due to recycled solids and recycled gas.

$$QrLRy = QrLRyRs + QrLRyFg, \text{ Btu/h (W)} \quad (5.14\text{-}30)$$

5.14.14.1 Recycled Solids. Residue may be recycled to utilize unburned carbon in the residue and/or reduce the amount of sorbent added. If the recycle piping and hold up bins are included in the area used to calculate the surface radiation and convection loss ($QrLSrc$), Subsection 5.14.9, then this calculation is omitted.

$$QrLRyRs = MrRyRs\,(HRsLv - HRsEn), \text{ Btu/h (W)} \quad (5.14\text{-}31)$$

where

$MrRyRs$ = mass flow rate of recycled residue, lbm/h (kg/s)

$HRsLv$ = enthalpy of the residue where it is collected, Btu/lbm (J/kg)

$HRsEn$ = enthalpy of the residue when it is readmitted to the steam generator, Btu/lbm (J/kg)

5.14.14.2 Recycled Gaseous Streams. An example of a recycled gaseous stream is flue gas recirculation after the air heater (typically ID fan gas recirculation). However, this loss is applicable to any gaseous stream added to the steam generator from an external source. Refer to Appendix C if the excess air in the recycled gaseous stream is different from the excess air upon which the dry gas weight is based.

$$QrLRyFg = MrRyFg\,(HFgCr - HFgEn), \text{ Btu/h (W)} \quad (5.14\text{-}32)$$

where

$MrRyFg$ = mass flow rate of the recycled gas, lbm/h (kg/s)

$HFgLv$ = enthalpy of wet flue gas at the average gas temperature leaving the unit (excluding leakage), Btu/lbm (J/kg)

$HFgEn$ = enthalpy of the recycled flue gas entering the steam generator, Btu/lbm (J/kg)

5.14.15 *QrLCw* — Loss From Cooling Water, Btu/h (W). This loss occurs when cooling water (external to the steam generator steam/water circuits) removes energy from the steam generator envelope. Typical equipment that uses cooling water are water cooled doors, ash coolers, and boiler circulating pumps. Care should be taken not to consider a loss twice. For example, if the sensible heat in residue is based upon the temperature of residue entering the ash cooler, there would be no

Copyright ASME International
Provided by IHS under license with ASME
No reproduction or networking permitted without license from IHS
Not for Resale

loss associated with the ash cooler; however, if the temperature of the residue is measured after the ash cooler, the energy absorbed by the ash cooler must be added to the steam generator losses:

$$QrLCw = \Sigma\, MrCwn\ (HWLv - HWEn), \quad \text{Btu/h (W)} \qquad (5.14\text{-}33)$$

where

$MrCwz$ = mass flow rate of cooling water at location z, lbm/h (kg/s)

5.14.16 *QrLAc* — Loss Due to Internally Supplied Air Preheater Coil, Btu/h (W). When an air preheater coil is supplied by steam from the steam generator, the steam generator envelope is defined to include the air preheat coils. The loss is the product of the condensate flow from the air preheat coils and the difference in enthalpy of the air preheat coils condensate and entering feedwater. The condensate flow should not be included in the boiler output:

$$QrLAc = MrSt36\ (HW36 - HW24), \quad \text{Btu/h (W)} \qquad (5.14\text{-}34)$$

5.14.17 Conversion of Loss on Rate Basis to Percent Input Fuel Basis. The loss calculated on a rate or unit of time basis may be used to calculate efficiency. If the loss on a percent input from fuel basis is desired, it may be calculated after completion of the efficiency calculations using the calculated fuel input:

$$QpLk = 100\,\frac{QrLk}{QrF},\ \% \qquad (5.14\text{-}35)$$

5.15 CREDITS

As in the loss section, the calculation of credits falls into two categories in accordance with the method in which they are measured and conveniently calculated. In the first category are those credits that can be readily expressed as a percent of input from fuel, such as energy in entering air; and second, those which are more readily calculated on an energy per unit of time basis, such as energy supplied by auxiliary equipment power. The credits are arranged in approximate order of significance and universal applicability, with the latter taking precedence.

5.15.1 *QpBDA* — Credit Due to Entering Dry Air, percent

$$QpBDA = 100\ MqDA\ HDAEn,\ \% \qquad (5.15\text{-}1)$$

where

$MqDA$ = total dry air entering the steam generator corresponding to the excess air leaving the boiler used to calculate dry gas weight, lbm/Btu (kg/J)

$HDAEn$ = enthalpy of dry air at the average air temperature entering the steam generator envelope ($TMnAEn$), Btu/lbm (J/kg). This is the weighted average of the various sources of the airflow contributing to $MqDA$ as defined above. Note that when an air preheating coil is supplied from the steam generator, the air temperature entering the air preheater coil is used for that portion of the air entering the steam generator.

5.15.2 *QpBWA* — Credit Due to Moisture in Entering Air, percent

$$QpBWA = 100\ MFrWA\ MqDA\ HWvEn,\ \% \qquad (5.15\text{-}2)$$

where

$HWvEn$ = the enthalpy of water vapor at the average air temperature entering the steam generator envelope ($TMnAEn$), Btu/lbm (J/kg)

5.15.3 *QpBF* — Credit Due to Sensible Heat in Fuel, percent

$$QpBF = \frac{100}{HHVF}\ HFEn,\ \% \qquad (5.15\text{-}3)$$

where

$HFEn$ = enthalpy of the fuel at the temperature of fuel entering the steam generator envelope at locations (1), (3), or (4), Btu/lbm (J/kg)

5.15.4 *QpBSlf* — Credit Due to Sulfation, percent. Sulfation is the reaction of sulfur dioxide (SO_2) with calcium oxide (CaO) and oxygen to form calcium sulfate ($CaSO_4$). The reaction is exothermic:

$$QpBSlf = MFrSc\,\frac{MpSF}{HHVF}\ HRSlf,\ \% \qquad (5.15\text{-}4)$$

where

$HrSlf$ = heat generated in the reaction of sulfur dioxide, oxygen, and calcium oxide to form calcium

Copyright ASME International
Provided by IHS under license with ASME
No reproduction or networking permitted without license from IHS
Not for Resale

sulfate per pound of sulfur capture, 6,733 Btu/lbm (15,660 kJ/kg)

MFrSc = mass fraction of sulfur capture, lbm/lbm (kg/kg)

5.15.5 *QrBX* — Credit Due to Auxiliary Equipment Power, Btu/h (W). Typical auxiliary equipment includes pulverizers, gas recirculating fans, hot primary air fans, and boiler circulating pumps. Note that credits shall not be calculated for forced draft fans, cold primary air fans, and other equipment when credits are calculated based on the measured fluid temperature exiting the equipment. For example, when a credit is calculated for entering air in accordance with Subsection 5.15.1, the energy added by the forced draft and primary air fans is included; thus, adding the credit for fan power would be accounting for the energy added twice.

5.15.5.1 For Steam Driven Equipment

$$QrBX = \frac{MrStX\ (HStEn - HStLv)\ EX}{100}, \quad \text{Btu/h (W)} \qquad (5.15\text{-}5)$$

where

HStEn = enthalpy of the steam supplied to drive the auxiliaries, Btu/lbm (J/kg)

HStLv = enthalpy at the exhaust pressure and the initial entropy of steam supplied to drive the auxiliaries, Btu/lbm (J/kg)

EX = overall drive efficiency, percent; includes turbine and gear efficiency

5.15.5.2 For Electrically Driven Equipment

$$QrBX = QX\ Cl\ \frac{EX}{100}, \text{ Btu/h (W)} \qquad (5.15\text{-}6)$$

where

QX = energy input to the drives, kWh (J)

EX = overall drive efficiency, percent; includes such items as motor efficiency, electric and hydraulic coupling efficiency, and gear efficiency

Cl = 3,412 Btu/kWh (1 J/J)

5.15.6 *QrBSb* — Credit Due to Sensible Heat in Sorbent, Btu/h (W)

$$QrBSb = MrSb\ HSbEn, \text{ Btu/h (W)} \qquad (5.15\text{-}7)$$

where

MrSb = mass flow rate of sorbent, lbm/h (kg/s)

HSbEn = enthalpy of the sorbent entering the steam generator envelope, Btu/lbm (J/kg)

5.15.7 *QrBWAd* — Credit Due to Energy Supplied by Additional Moisture, Btu/h (W). Typical examples of additional moisture are soot blowing and atomizing steam:

$$QrBWAd = \Sigma\ MrStz\ (HStEnz - HWRe), \quad \text{Btu/h (W)} \qquad (5.15\text{-}8)$$

where

MrStEnz = mass flow rate of additional moisture, lbm/h (kg/s) at location *z*

HStzEnz = enthalpy of additional moisture entering the envelope, Btu/lbm (J/kg)

HWRe = enthalpy of water at the reference temperature, Btu/lbm (J/kg)

5.15.8 Conversion of Credits on Rate Basis to Percent Input Fuel Basis. The credit calculated on a rate or unit of time basis may be used to calculate efficiency directly. If the credit on a percent input from fuel basis is desired, it may be calculated after completion of the efficiency calculations using the calculated fuel input:

$$QpB = 100\ \frac{QrBk}{QrF}, \%$$ (5.15-9)

5.16 UNCERTAINTY

Section 5.2, Data Reduction, discussed calculation of the precision index and degrees of freedom for individual parameters. This Section presents calculations for overall precision index and degrees of freedom for the test. This Section also presents calculation methods for sensitivity coefficients and the precision and bias components of uncertainty. For post-test uncertainty calculation, all steam generator performance calculations must be complete prior to the beginning of the uncertainty calculations presented in this Section. The uncertainty calculations presented in this Section, as well as those presented in Subsection 5.2.3, can be used for pretest as well as post-test uncertainty analysis.

The pretest uncertainty analysis can provide important information and reduce the effort required to calculate uncertainty after completion of a performance test. Refer to Section 7 for additional guidance on pretest uncertainty analysis. The majority of bias limit estimates can be made prior to starting a performance test. Precision indexes can be estimated based on preliminary observation of equipment operating conditions. Pretest estimates of the parameter standard deviation and degrees of freedom can be used to determine the frequency and number of measurements required for a given

Copyright ASME International
Provided by IHS under license with ASME
No reproduction or networking permitted without license from IHS
Not for Resale

variable during the test. This Code does not require a pretest uncertainty analysis; however, it is important to note that waiting until after a performance test is complete to calculate uncertainty can result in actual test uncertainties in excess of expected or agreed upon values.

This Section provides general guidelines for calculating the uncertainty associated with a steam generator performance test. A more detailed description of uncertainty analysis calculations along with derivations is included in Section 7, which should be reviewed prior to beginning any uncertainty calculations.

5.16.1 Sensitivity Coefficients. Sensitivity coefficients represent the absolute or relative effect of a measured parameter on the calculated steam generator efficiency. Sensitivity coefficients can also be used for determining the effect of a parameter on an intermediate calculation such as steam generator output. Sensitivity coefficients are important for pretest uncertainty analysis to determine what parameters have the largest impact on the desired result (e.g., efficiency, output, gas temperature).

Sensitivity coefficients are calculated by arbitrarily perturbing the value of a parameter. The change in the value of a measured parameter can be calculated from:

$$CHGPAR = \frac{(PCHGPAR\ XAVE)}{100} \text{ or } \frac{(PCHGPAR\ U)}{100} \qquad (5.16\text{-}1)$$

where

CHGPAR = incremental change in the value of a measured parameter

PCHGPAR = percent change in the value of a measured parameter. The recommended value of *PCHGPAR* is 1.0%. If the average value of the measured parameter is zero, enter any small incremental change.

XAVE = arithmetic average value of a measured parameter. For development of sensitivity coefficients, care must be taken to use units that will not be zero such as absolute temperature and pressure.

U = integrated average value of a measured parameter. Refer to note above regarding units.

Alternatively, such as when *XAVE* is very small or zero, *CHGPAR* can be any convenient small increment of *XAVE*.

Absolute sensitivity coefficients are calculated for each measured parameter from the following equation:

$$ASENSCO = \frac{RECALEF - EF}{CHGPAR} \qquad (5.16\text{-}2)$$

where

ASENSCO = absolute sensitivity coefficient for a measured parameter, percent efficiency per measured parameter units

EF = steam generator fuel efficiency, calculated for the actual (measured) parameter

RECALEF = recalculated steam generator fuel efficiency using (*X* + *CHGPAR*) or (*U* + *CHNGPAR*) in place of *X* (or *U*) while all other measured parameters are held fixed

In no case shall an absolute sensitivity coefficient smaller than the efficiency convergence tolerance be considered. If smaller, it should be considered zero. Refer to Subsection 5.7.3 regarding the efficiency convergence tolerance.

The above equation gives the sensitivity coefficient associated with steam generator efficiency. However, this form of equation can be used for any calculated result such as output, fuel flow, calcium/sulfur ratio, etc., by substituting the result for *EF* and *RECALEF*.

Relative sensitivity coefficients are calculated for each measured parameter from the following equation:

$$RSENSCO = \frac{(ASENSCO\ XAVE)}{PFE} \text{ or } \frac{(ASENSCO\ U)}{PFE} \qquad (5.16\text{-}3)$$

where

RSENSCO = relative sensitivity coefficient for a measured parameter, percent change in result per percent change in measured parameter

The above equation is shown for efficiency but can be used for other calculated results.

5.16.2 Precision Index and Degrees of Freedom. The precision index of the calculated steam generator efficiency is obtained by combining the precision indexes of all measured parameters according to the root-sum-square rule:

$$PIR = \sum_{i=1}^{N} (ASENSCO_i PI_i)^2]^{1/2} \qquad (5.16\text{-}4)$$

where

PIR = overall precision index of test

PI_i = precision index for measured parameter *i*

Copyright ASME International
Provided by IHS under license with ASME
No reproduction or networking permitted without license from IHS
Not for Resale

$ASENSCO_i$ = absolute sensitivity coefficient for measured parameter i

N = number of measured parameters

The number of degrees of freedom for the overall test result is calculated from the following equation:

$$DEGFREER = \frac{PIR^4}{\sum_{i=1}^{N} \frac{(ASENSCO_i PI_i)^4}{DEGFREE_i}} \qquad (5.16\text{-}5)$$

where

$DEGFREER$ = overall number of degrees of freedom for test

$DEGFREE_i$ = degrees of freedom for measured parameter i

5.16.3 Precision Component of Uncertainty. The precision component of uncertainty is calculated from the precision index and degrees of freedom of the result using the following equation:

$$UPC = STDTVAL\ PIR \qquad (5.16\text{-}6)$$

where

UPC = precision component of uncertainty

$STDTVAL$ = two-tailed Student's t-value.

The two-tailed Student's t-value is based on the 95th percentile point distribution and the degrees of freedom of the result. Table 5.16-1 shows the Student's t-value as a function of degrees of freedom. Interpolation in the table is done using reciprocal degrees of freedom.

A curve fit for t is:

$$t = 1.9588 + \frac{2.3717}{DEGFREE} + \frac{3.1213}{DEGFREE^2} + \frac{0.7993}{DEGFREE^3} + \frac{4.4550}{DEGFREE^4} \qquad (5.16\text{-}7)$$

5.16.4 Bias Limit. Bias limits for uncertainty calculations are estimated based on the method used to determine the values of a measured parameter. Recommended procedures for estimating bias limits are presented in Sections 4 and 7. Elementary bias limits for each measured parameter are combined according to the root-sum-square rule:

$$BIAS_i = \left(\sum_{j=1}^{M} BIAS_j^2 \right)^{1/2} \qquad (5.16\text{-}8)$$

where

$BIAS_i$ = bias limit of measured parameter i. The units of bias are the same as the units of the measured parameter.

$BIAS_j$ = bias limit of individual components used to determine the value of parameter i. Refer to note on units above.

M = number of components in the measurement system of parameter i

NOTE: "Measure" and "measurement system" are used in a general sense and do not exclude estimation of parameters.

5.16.4.1 Bias Limit Associated With Spatially Nonuniform Parameters. The bias limits associated with spatially nonuniform parameters which vary in both space and time are discussed in detail in Sections 4 and 7. Section 7 presents models which can be used to estimate the bias limit associated with these types of parameters. These models use a variable called Spatial Distribution Index (SDI). Spatial Distribution Index is calculated from the following equation:

$$SDI = \left[\frac{1}{N} \sum_{i=1}^{N} (z_i - Z)^2 \right]^{1/2} \qquad (5.16\text{-}9)$$

Eq. (5.16-10) is suggested for multiple midpoint average:

TABLE 5.16-1
TWO-TAILED STUDENT'S t-TABLE FOR THE 95% CONFIDENCE LEVEL

Degrees of Freedom	t	Degrees of Freedom	t
1	12.706	16	2.120
2	4.303	17	2.110
3	3.182	18	2.101
4	2.776	19	2.093
5	2.571	20	2.086
6	2.447	21	2.080
7	2.365	22	2.074
8	2.306	23	2.069
9	2.262	24	2.064
10	2.228	25	2.060
11	2.201	26	2.056
12	2.179	27	2.052
13	2.160	28	2.048
14	2.145	29	2.045
15	2.131	30 or more	1.960

Copyright ASME International
Provided by IHS under license with ASME
No reproduction or networking permitted without license from IHS
Not for Resale

$$\text{Multiple Midpoint } BIAS_i = \frac{SDI}{(N-1)^2} \qquad (5.16\text{-}10)$$

where

SDI = spatial distribution index

N = number of points in the measurement grid

z = time averaged value of the measured parameter

Z = integrated average value of z

It should be noted that although SDI is calculated identically to standard deviation, there is a significant statistical difference between the two variables.

5.16.4.2 Bias Limit of Result. The bias limit of a result is also calculated according to the root-sum-square rule:

$$BIASR = \left[\sum_{i=1}^{N} (ABSENCO_i\ BIAS_i)^2\right]^{1/2} \qquad (5.16\text{-}11)$$

where

$BIASR$ = overall bias limit of the test result

The bias limit of the result can be positive and/or negative. If the positive and negative bias limits are not symmetrical, the positive and negative values must be calculated separately. The sign of the *product* ($ABSENCO_i \times BIAS_i$) determines whether the term is summed with the positive or negative bias limits.

5.16.5 Total Uncertainty. The total uncertainty of a test is calculated from the overall test precision and bias limit components:

$$UNC = (UPC^2 + BIASR^2)^{1/2} \qquad (5.16\text{-}12)$$

where

UNC = total uncertainty

The total uncertainty must be calculated separately for both positive and negative ranges if the bias limits are not symmetrical.

5.17 OTHER OPERATING PARAMETERS

It is sometimes desirable to test a steam generator for performance parameters other than rated capacity and efficiency. This Section covers such tests.

Instruments to be used, methods of measurement, and acceptable values for uncertainty of results shall be the subject of pretest agreements. Instruments and methods of measurement are described in Section 4.

To ensure that operating and equipment condition, and control system adjustments do not adversely affect the tests, particular attention should be given to the recommendations in Subsections 3.2.5.2, 3.2.5.3, and 3.2.6.

5.17.1 Peak Capacity. Peak capacity is defined as the maximum steam mass flow rate, at a specific pressure and temperature, that the steam generator is capable of producing (including specified blowdown and auxiliary steam) for a limited time period without damaging the steam generator components.

Peak capacity can be either measured directly (*MrSt31* for saturated steam generators, *MrSt32* for superheated steam generators) or calculated from feedwater, desuperheater water, and blowdown mass flow rates.

When desuperheater water flow is not measured, it may be determined by an energy balance. When blowdown flow is not measured, it may be determined from the setting of a calibrated valve or by energy balance around a blowdown heat recovery system.

Data required for peak capacity determination are summarized in Table 4.2-3.

Prior to the test, the following shall be defined and agreed upon:

- Duration of the "limited time period." This determines the minimum run time.
- Steam pressure and temperature for superheated steam generators
- Steam pressure for saturated steam generators
- Feedwater pressure and temperature
- Blowdown rate

5.17.2 Steam Temperature. Data required for the determination of superheater and/or reheater steam temperature characteristics and control ranges are given in Table 4.2-4.

5.17.3 Pressure Loss. Instruments and methods of measurement for steam and water differential pressure tests, i.e., pressure loss across the steam generator or a particular section of the steam generator, are given in Subsection 4.5.4. Instruments and methods of measurement for air or flue gas differential pressure tests, i.e., draft loss across the steam generator or a particular section of the generator, are given in Subsection 4.5.3.

5.17.4 Static Pressures. Instruments and methods of measurement for steam water static pressure tests are given in Subsection 4.5.4. Instruments and methods of measurement for air and gas static pressure tests are given in Subsection 4.5.3.

5.17.5 Exit Gas Temperature. Data required for exit gas temperature tests are given in Table 4.2-5. Instruments and methods of gas temperature measurement are given in Subsection 4.4.3.

Copyright ASME International
Provided by IHS under license with ASME
No reproduction or networking permitted without license from IHS
Not for Resale

Computational procedures for obtaining the corrected gas outlet temperature (*TFgLvCr*) are given in Subsection 5.18.2. Computational procedures for obtaining the average exit gas temperature (*TMnFgLvCr*) are given in Subsection 5.13.3.

5.17.6 Air Leakage or Air Infiltration. Determination of the amount of air leakage (as across an air heater), or infiltration through the steam generator casing, or any section of the casing downstream of the furnace exit, is accomplished by comparing excess air or air mass flow rate. Data required for excess air determination are given in Table 4.2-9. Excess air and mass flow rate computational procedures are given in Section 5.11.

The amount of air infiltration, or leakage, is expressed in terms of the increase in percent excess air:

$$MpAhLg = 100\ (XpAz2 - XpAz1),\ \% \qquad (5.17\text{-}1)$$

where

MpAhLg = mass percent air infiltration
XpAz2 = mass percent of excess air at the downstream sampling location
XpAz1 = mass percent of excess air at the upstream sampling location

The previous paragraph addressed calculating air infiltration between two points where the O_2 in the flue gas can be measured entering and leaving the section in question, for example, a hot precipitator. On units with recuperative air heaters (air to gas heat exchangers), the setting infiltration between the air heater air exit and the point of measuring O_2 in the flue gas can be calculated. The combustion airflow to the burners (and pulverizers, if applicable) can be calculated by energy balance around the air heater based on the flue gas flow entering the air heater(s) and measured air and gas temperature entering and leaving the air heater(s). Setting infiltration between the air heater air outlet and the point of measuring O_2 (excess air) in the flue gas (usually boiler or economizer gas outlet) can be calculated from the difference between the wet airflow determined at the point of O_2 measurement and the wet airflow leaving the air heater. All airflows and gas flows are calculated stoichiometrically in accordance with Sections 5.11 and 5.12. When there is more than one air heater of the same type, it is usually sufficiently accurate to assume equal flows between the air heaters. If gas flow or airflow is measured to determine the imbalance, the ratio of the results should be used to correct the gas flow/airflow calculated stoichiometrically. For pulverized coal fired units with cold primary air systems, refer to Section 5.13 for calculation of air and gas weights.

5.18 CORRECTIONS TO STANDARD OR GUARANTEE CONDITIONS

It is usually not possible to test a unit with the standard or guarantee fuel and at the exact standard or guarantee operating conditions. By correcting the test results to standard or contract conditions, it is possible to make a more meaningful comparison and evaluation of efficiency and performance.

The corrections to efficiency described in this Section specifically address efficiency calculated by the energy balance method. Subsection 5.18.10 discusses correcting input-output efficiency test results to contract conditions.

Corrections to efficiency described in this Section consist of using the standard or guarantee air inlet temperature, correcting air heater gas outlet temperature for deviations between the test and standard conditions, and repeating the efficiency calculations utilizing the standard or guarantee fuel and other operating variables described below. The corrections described herein are for the most common variables. In accordance with Subsection 3.2.3, the parties to the test shall agree upon other corrections for a specific unit, including correction curves.

The corrections address off-design test conditions, not changes in load. Variations between the targeted test load and actual test load should not be more than 5%. It is expected that the difference between the test efficiency and corrected efficiency will usually be no more than two to three percentage points.

5.18.1 Entering Air Temperature. Corrections to the credits for changes in test entering air temperature to standard or guarantee conditions are made by substituting the standard or guarantee temperature for the test temperature in the applicable credit equations.

5.18.2 Exit Gas Temperature. When correction of the exit gas temperature is applicable, corrections to the losses are made by substituting the corrected exit gas temperature for the test conditions in the applicable loss equations.

5.18.2.1 Units Without Air to Gas Heat Exchanger Type Air Heater(s). The exit gas temperature may be corrected based upon the manufacturer's correction curves for deviations from design conditions if agreed upon between the parties to the test. Examples of deviation from design conditions when in excess of those for which the thermal performance is unaffected (refer to Subsection 5.18.3) might include deviations from design fuel, significant difference in entering air temperature, and feedwater inlet temperature.

Copyright ASME International
Provided by IHS under license with ASME
No reproduction or networking permitted without license from IHS
Not for Resale

5.18.2.2 Units With Air to Gas Heat Exchanger Type Air Heater(s). The exit gas temperature shall be corrected for the standard or guarantee conditions based upon the test air heater performance for deviations from standard or guarantee conditions. The parties to the test may agree to use PTC 4.3, Air Heaters, as described below, or a different model if the corrections described can be accomplished:

$$TFgLvCrd = TFgLvCr + TDiTAEn + TDiTFgEn + TDiMrFgEn + TDiXr,\ °F\ (°C) \quad (5.18\text{-}1)$$

where

$TFgLvCrd$ = exit gas temperature corrected to design conditions, °F (°C)

$TFgLvCr$ = exit gas temperature corrected for air heater leakage and used for calculation of efficiency (as tested), °F (°C)

$TDiTAEn$ = temperature correction for entering air temperature, °F (°C)

$TDiTFgEn$ = temperature correction for entering gas temperature, °F (°C)

$TDiMrFgEn$ = temperature correction for entering gas mass flow, °F (°C)

$TDiXr$ = temperature correction for off-design X-ratio, °F (°C)

PTC 4.3-1968, Air Heaters, does not cover corrections to trisector air heaters (partitioned sections to separate primary and secondary air). Until PTC 4.3-1968, Air Heaters, is revised, this Code will handle the corrections as a standard bisector air heater. The airflow is the sum of the primary and secondary air leaving the air heater. The entering air temperature is the mass weighted average air temperatures entering the primary and secondary air heaters, weighted on the basis of the airflow mass flow rates leaving the primary and secondary air heaters. The corrected air temperature leaving the air heater is required for some calculations such as pulverizer tempering airflow for the corrected conditions. It is sufficiently accurate for these correction calculations to assume the primary and secondary air temperatures leaving the air heater change by the same amount as the predicted change in average air temperature leaving the air heater.

The terms for Eq. (5.18-1) and other considerations for determining this correction are shown in (a) through (f) below:

(a) Entering Air Temperature:

$$TDiTAEn = \frac{TAEnd(TFgEn - TFgLvCr) + TFgEn(TFgLvCr - TAEn)}{(TFgEn - TAEn)} - TFgLvCr,\ °F\ (°C) \quad (5.18\text{-}2)$$

where

$TAEnd$ = design entering air temperature, °F (°C). Refer to Subsection 5.18.1.

$TAEn$ = air temperature entering air heater(s), °F (°C)

$TFgEn$ = gas temperature entering air heater(s), °F (°C)

(b) Entering Gas Temperature. Correction for entering gas temperature shall be agreed upon by the parties to the test. Examples for which corrections due to the entering gas temperature may be applicable include:

(1) Equipment within the steam generator envelope not supplied by the steam generator vendor, such as hot air quality control equipment. The specified temperature drop across the terminal points shall be used to determine the corrected air heater entering gas temperature based on the measured gas temperature entering such equipment.

(2) Feedwater inlet temperature. The entering feedwater temperature is significantly different from the standard or guarantee conditions.

(3) Deviations from contract fuel. The test fuel is significantly different from the contract fuel.

The exit gas temperature correction due to off-design entering gas temperature may be calculated from the following equation:

$$TDiTFgEn = \frac{TFgEnCrd(TFgLvCr - TAEn) + TAEn(TFgEn - TFgLvCr)}{(TFgEn - TAEn)} - TFgLvCr,\ °F\ (°C) \quad (5.18\text{-}3)$$

where

$TFgEnCrd$ = entering gas temperature corrected to design conditions, °F (°C)

(c) Entering Gas Mass Flow. For determining corrected efficiency, the air heater exit gas temperature may be corrected for the difference in the gas mass flow entering the air heater for the test conditions and the gas mass flow entering the air heaters for the contract conditions.

An example of when this correction may be necessary is when equipment between the steam generator air inlet and gas outlet is not supplied by the steam generator vendor and the equipment does not perform as specified. An example is hot air quality control equipment in which the tested air infiltration across

Copyright ASME International
Provided by IHS under license with ASME
No reproduction or networking permitted without license from IHS
Not for Resale

the equipment may be different than specified. The air heater gas outlet temperature shall be corrected for the gas mass flow entering the air heater that would occur using the specified infiltration and the gas mass flow that would occur with efficiency and operating conditions corrected to guarantee conditions.

For units with separate primary air heaters and secondary air heaters (for the remainder of the combustion air), it is recommended for simplification of the calculations that the test gas mass flow be used for the primary air heater for the corrected conditions (assuming normal operation); thus, no correction is required for the primary air heater. The balance of the difference in the gas mass flow is used to correct the secondary air heater exit gas temperature.

Because of the possibility of abnormal coal or other operating considerations during the test, the parties to the test should agree upon how to determine the split between the air heaters for the corrected conditions.

TDiMrFgEn is obtained from a correction curve, usually provided by the air heater vendor.

(d) Heat Capacity or X-Ratio. For determining corrected efficiency, the air heater exit gas temperature may be corrected for the difference in the heat capacity ratio for the test conditions and the heat capacity ratio calculated for the corrected efficiency and the contract steam generator output. The most typical reason for the heat capacity ratio to be different from design is air bypassing the air heater(s). Examples of cases in which this may occur are excessive setting infiltration (normally older units) and excessive pulverizer tempering airflow. For units with separate primary and secondary air heaters (as described above), if the test is conducted with the target primary air heater exit gas temperature and corrections to pulverizer tempering airflow are not required because of the difference in the moisture between the test and contract coal, it is recommended for simplification of the calculations that the test *X*-ratio be used for the secondary air heater. This eliminates the need for calculating a primary air heater correction. Subparagraph (f) below addresses calculation of corrected pulverizer tempering airflow and corrected mass flow rate of flue gas entering the primary air heater.

TDiXr is obtained from a correction curve, usually provided by the air heater vendor.

(e) Corrections for Pulverizer Tempering Airflow, Units Without Primary Air Heater. The air temperature leaving the air heater may be significantly different from the test conditions which could impact the amount of pulverizer tempering air required. When tempering air is normally utilized, the corrected air temperature leaving the air heater shall be calculated by energy balance based on the corrected conditions. A corrected tempering airflow and corresponding corrected secondary airflow should be determined for the corrected air temperature leaving the air heater and test or design pulverizer inlet air temperature (Subsection 5.18.3). The revised *X*-ratio correction and revised corrected air heater exit gas temperature should be determined. This process is iterative and should be repeated until the corrected exit gas temperature is within 0.5°F (0.3°C).

(f) Corrections for Pulverizer Tempering Airflow, Units With Primary Air Heater. When required, this correction should be performed before the entering gas flow and *X*-ratio corrections. Refer to Subsection 5.18.2.2(e) and Subsection 5.18.3 regarding when corrections for pulverizer tempering airflow may be required. Corrections for tempering airflow can generally be solved directly (as opposed to iteratively) for units with separate primary air heaters that are controlled to a fixed exit gas temperature. The parties to the test shall agree upon the controlled primary exit gas temperature (normally the test temperature) and design pulverizer entering air temperature. Since the primary airflow to the pulverizers is constant and the primary air heater inlet and outlet flue gas temperatures are known, the required primary air heater gas flow can be solved for directly as follows:

$$MrFg14BCr = MrA11 \frac{HA11d - HA8Ad}{HFg14Bd - HFg15Bd}, \quad \text{lbm/h (kg/s)} \qquad (5.18\text{-}4)$$

where

MrFg14BCr = corrected mass flow rate of flue gas entering primary air heater, lbm/h (kg/s)
MrA11 = primary airflow entering pulverizers, lbm/h (kg/s)
HA11d = enthalpy of the design air temperature entering the pulverizer, Btu/lbm (J/kg)
HA8Ad = enthalpy of the design air temperature entering the air heater, Btu/lbm (J/kg)
HFg14Bd = enthalpy of the design gas temperature entering the primary air heater, Btu/lbm (J/kg)
HFg15BCrd = enthalpy of the design gas temperature leaving the primary air heater (excluding leakage), Btu/lbm (J/kg)

This energy balance procedure is only valid if the air heater surface and performance characteristics are capable of producing the design air temperature leaving. This can be verified by calculating the corrected air heater exit gas temperature utilizing the design boundary conditions. If the corrected exit gas temperature is higher than the desired control exit gas temperature, the actual air temperature leaving will be lower than

Copyright ASME International
Provided by IHS under license with ASME
No reproduction or networking permitted without license from IHS
Not for Resale

the required pulverizer inlet temperature. This indicates that the air heater is not capable of performing in accordance with the energy balance, and the actual expected performance will have to be calculated iteratively using the correction procedure parameters as the air heater model.

5.18.3 Fuel Analysis. Corrections to credits, losses (efficiency), and air and flue gas mass flow rates for differences in fuel constituents between the test and contract fuel are made by utilizing the standard or contract fuel analysis in the applicable computations.

Corrections to air heater performance for pulverized coal fired units (units with controlled air temperature for drying the fuel) and air and gas resistance resulting from differences in air and flue gas mass flow rates are described below. Additional corrections should not be required if the test and contract fuels are equivalent; i.e., have similar ultimate and proximate analyses and similar slagging, fouling, and combustion characteristics. Refer to Appendix E for guidance regarding equivalent fuels.

Equivalent fuels do not affect the thermal performance of the steam generator. Thermal performance with regard to efficiency refers to the gas temperature exiting the steam generator pressure parts, but also applies to furnace, superheat, and reheat absorption and may include other parameters such as steam temperature and spray attemperation.

The differences in the slagging and fouling characteristics have the most significant impact on thermal performance. Differences in fuel moisture content (on the order of ±5 points) and ash content (±10 points) have minimal impact on the gas temperature leaving the pressure parts, but may affect component absorptions.

For manufactured or process gases and/or synthetic fuels, differences in constituents may impact flue gas mass flow rate and yet have a minimal impact on the gas temperature leaving the pressure parts. However, if the corrected flue gas mass flow rate is different by more than 2 or 3%, absorptions may be affected.

This Code requires that the parties to the test agree that the test fuel is equivalent to the contract fuel, or that they reach a pretest agreement as to a method for correcting the thermal performance of the steam generator for differences between the test fuel and the standard or contract fuel.

On pulverized coal fired units, the air temperature entering the pulverizer is controlled to maintain a design pulverizer air-coal outlet temperature. The required pulverizer inlet air temperature is a function of the moisture in the coal. If the test coal is appreciably off design (more than two or three percentage points of water in coal) the pulverizer tempering airflow and air heater performance should be corrected for the mill inlet temperature required for the design coal. High moisture coals generally do not require pulverizer tempering air, and corrections for coal moisture are not required unless tempering air is utilized during the test. The parties to the test shall agree upon whether this correction is required, and if it is required, either agree upon a design mill inlet air temperature or a method of correcting the test mill inlet temperature for off-design moisture in coal.

5.18.4 Sorbent Analysis and Sorbent Reactions. The actual sulfur content of the coal during a test is not known until after the test. Therefore, the calcium to sulfur molar ratio during the test is likely to be different from the agreed upon target value for the test. Deviation from the target calcium to sulfur molar ratio impacts the sulfur capture/retention result. Also, differences between the test and the standard or contract sulfur content of the fuel and sorbent analysis impact the sorbent mass flow rate required (Ca/S ratio) as well as the sulfur capture/retention. These differences also impact efficiency and air and flue gas mass flow rates.

5.18.4.1 Corrections for Sorbent Analysis and Sorbent Reactions. In accordance with Subsection 5.18.4.2, agreed upon values for the calcium to sulfur (Ca/S) molar ratio and sulfur capture are used to make the corrected combustion and efficiency calculations. The calcium to sulfur molar ratio is used in conjunction with the standard or contract fuel analysis to calculate the corrected sorbent rate, lbm/lbm fuel (kg/kg fuel). The corrected sorbent rate, agreed upon sulfur capture/retention, standard or contract sorbent analysis, and calcination fraction determined from the test are all substituted for the test values to calculate the required input data for the corrected efficiency calculations.

5.18.4.2 Guidelines for Establishing a Standard or Reference Ca/S Molar Ratio and Sulfur Capture. It is desirable that the sorbent rate versus sulfur capture/retention characteristics of the unit be determined prior to an efficiency test. This allows the parties to the test to establish a target calcium to sulfur molar ratio for operating the unit during the test. This agreed upon value would normally be used as the value for corrections to standard or contract conditions in conjunction with the tested sulfur capture/retention result. There may be occasions when the target value for the test does not reflect steam generator capability such as off-design fuel sulfur content, sorbent characteristics versus the design sorbent, overfeeding of sorbent to meet a lower than contract sulfur emissions level, etc. In such cases,

Copyright ASME International
Provided by IHS under license with ASME
No reproduction or networking permitted without license from IHS
Not for Resale

it may be necessary for the parties to the test to agree upon calcium to sulfur molar ratio and sulfur capture/retention values to use for the corrected efficiency results. The test calcium to sulfur molar ratio (Ca/S) may be corrected for the changes between the test and the standard or contract sulfur capture and sulfur content of the fuel by use of correction curves or equations agreed to by the parties to the test. Note that the purpose of this Section is to calculate a normalized efficiency that reflects the unit's capability.

5.18.5 Residue. The considerations for residue are losses related to unburned combustible in the residue, sensible heat of residue losses, residue split between the various boiler collection points, the quantity of ash in the fuel, and the quantity of spent sorbent, which are discussed in the following sections.

5.18.5.1 Unburned Carbon Loss. Unless otherwise agreed to, the test unburned carbon loss is to be used for the corrected conditions. The unburned carbon mass per mass of fuel basis for the standard or guaranteed fuel is calculated by multiplying the unburned carbon measured during the test by the ratio of the higher heating value of the standard or guarantee fuel divided by the higher heating value of the test fuel.

5.18.5.2 Residue Quantity. The residue quantity is the sum of the ash in the fuel, unburned carbon, and spent sorbent, and is calculated for the standard or guarantee conditions using the reference fuel and sorbent analysis, and other corrected conditions in the same manner as calculated for the test conditions.

5.18.5.3 Residue Split. The residue split between the various collection locations should be assumed to be the same as tested unless otherwise agreed upon. For fluidized bed units, the quantity of ash in the fuel and sorbent used can impact the ash split. In cases where this may be significant, a correction curve or procedure should be agreed upon.

5.18.5.4 Sensible Heat in Residue Loss. The sensible heat in residue loss at each location is calculated based upon the total mass of residue calculated for the standard or guarantee conditions, using the residue split in accordance with Subsection 5.18.5.3 and temperatures (corrected to standard or guarantee conditions, if applicable).

5.18.6 Excess Air. Minor deviations in excess air between the test and standard or contract value that are due to variability of establishing test conditions may be corrected to the standard, contract, or other agreed upon value. Corrections to losses or credits due to excess air are made by substituting the target value in the applicable equations.

If the unit must operate at an excess air level other than the standard or contract value to meet other performance parameters such as unburned carbon, emissions, steam temperature, etc., then no correction to the "as tested" excess air value should be applied.

5.18.7 Other Entering Streams

5.18.7.1 Moisture in Air. Substitute the standard or guarantee value for the test value in the applicable calculations.

5.18.7.2 Fuel Temperature. Substitute the standard or guarantee value for the test value.

5.18.7.3 Sorbent Temperature. Substitute the standard or guarantee value for the test value.

5.18.8 Surface Radiation and Convection Loss. When this item is measured, the results shall be corrected to the standard or guarantee ambient conditions (air temperature and velocity). This is a three step process. For each incremental area measured:

- Solve for the insulation and lagging heat transfer coefficient, *Hwz*, based on the measured parameters.
- Based on the assumption that *Hwz* is constant, solve for the corrected surface temperature, *TMnAfCrz*, for the standard or guarantee ambient conditions.
- With the corrected surface temperature and standard or guarantee ambient conditions, solve for the corrected surface convection and radiation loss, *QrLSrcCrz*.

5.18.8.1 Insulation and Lagging Heat Transfer Coefficient, *Hwz*

$$Hwz = \frac{\left(\frac{QrLSrcz}{Afz}\right)}{Thfz - TMnAfz}, \text{ Btu/ft}^2\text{h°F (W/m}^2\text{s°C)} \quad (5.18\text{-}5)$$

where *Thfz* is the hot face temperature of the insulation and lagging (steam generator wall, flue, duct, etc.).

5.18.8.2 Corrected Surface Temperature, *TMnAfCrz*. The corrected surface temperature requires the solution of the following equation:

$$Hwz\ (Thfz - TMnAfCrz) = Hrcaz\ (TMnAfCrz - TMnARe) \quad (5.18\text{-}6)$$

where *Hrcaz* is the sum of the radiation and convection heat transfer coefficients for *TMnAfCrz* and the reference

Copyright ASME International
Provided by IHS under license with ASME
No reproduction or networking permitted without license from IHS
Not for Resale

ambient air temperature, *TMnARe,* and reference surface velocity.

An iterative solution is required to solve Eq. (5.18-6) using the standard method for calculating *Hrcaz.* The solution can be simplified by using a linear curve fit for *Hrcaz* in the range of the corrected surface temperatures and reference ambient air temperature and reference velocity. The following curve fit predicts a surface temperature within 0.5% for a range of surface temperatures from 130°F to 280°F for standard reference ambient conditions:

$$Hrcaz \approx 1.4254 + 0.00593\ (TMnAfCrz - TMnARe) \quad (5.18\text{-}7)$$

The user should develop a similar curve fit if different standard conditions are used. This simplification allows for solving for the corrected surface temperature directly from the following equation:

$$TMnAfCrz = \frac{-B + \sqrt{B^2 - 4\,A\,C}}{2\,A},\ °F\ (°C) \quad (5.18\text{-}8)$$

where

$A = 0.00593$

$B = 1.4254 - 2.0 \times 0.00593\ TMnARe + Hwz$ (5.18-9)

$C = -1.4254\ TMnARe - Hwz\ Thfz + 0.00593\ TMnARe^2$ (5.18-10)

where *TMnARe* is the reference surrounding air temperature.

5.18.8.3 Corrected Surface Radiation and Convection Loss, *QrLSrcCrz.* Solve for the corrected surface radiation and convection loss in accordance with Subsection 5.14.9 using the corrected surface temperature and the standard or guarantee ambient conditions.

5.18.9 Miscellaneous Efficiency Corrections. Other minor losses and/or credits that are measured should be reviewed by the parties to the test and agreement reached as to whether corrections to the efficiency are applicable.

5.18.10 Corrected Input-Output Efficiency. When efficiency is determined by the input-output method, the test result is corrected to the standard or guarantee conditions by adding the difference between the corrected efficiency and test efficiency (both as calculated by the energy balance method) to the input-output test results. Design boundary conditions (such as entering air and exit gas temperatures) shall be used if they are not measured. The most significant corrections are typically fuel analysis, entering air temperature and exit gas temperature corrected for entering air temperature (for unit with air-to-gas-heat exchangers). Correcting for the test fuel versus the design fuel requires that the ultimate analysis be determined for the test fuel as well as the heating value. For units with air to gas heat exchangers, if the entering air temperature is measured, the exit gas temperature (expected temperature if not measured) should be corrected in accordance with Subsection 5.18.2. Any other corrections discussed above can be applied if measurements of necessary parameters are made.

5.18.11 Air and Gas Resistance. The measured resistance shall be corrected to standard or guarantee conditions for the difference in mass flow of the flowing fluid and the specific volume of the fluid between the test condition and the standard conditions. The general equations for correcting air resistance or draft loss are:

$$PDiAFgCr = C1\left((PDiAFg - Se)\left(\frac{MrAFgCr}{MrAFg}\right)^2 + Se\right),\ \text{in. wg (Pa)} \quad (5.18\text{-}11)$$

$$Se = C2\,\frac{2.31}{12}\,Ht(DnAFg - DnA),\ \text{in. Wg (Pa)} \quad (5.18.12)$$

where

PDiAFgCr = corrected air resistance or draft loss, in. wg (Pa)

PDiAFg = measured air resistance or draft loss, in. wg (Pa)

MrAFg = mass flow rate of air or flue gas for test conditions, lbm/h (kg/s)

MrAFgCr = corrected mass flow rate of air or flue gas, lbm/h (kg/s)

Se = stack effect or difference in static pressure between the air/gas side of boiler and surrounding ambient air. *Se* will be negative if the fluid is flowing upward.

Ht = height between the pressure locations, i.e., the difference in elevation between the downstream and upstream pressure locations, ft (m). *Ht* will be positive if the fluid is flowing upward.

Copyright ASME International
Provided by IHS under license with ASME
No reproduction or networking permitted without license from IHS
Not for Resale

$C1$ = unit conversion factor, 1.0 for in. wg (2.4884E + 02 for Pa)

$C2$ = unit conversion factor, 1.0 for in. wg (2.4884E + 02 for Pa)

$DnAFg$ = density of air or flue gas, lbm/ft^3 (kg/m^3). For the furnace shaft, use a value of 0.0125 lbm/ft^3 (0.20 kg/m^3).

DnA = density of ambient air in vicinity of pressure measurement, lbm/ft^3 (kg/m^3)

The pressure drop characteristics of each system must be examined in detail and a detailed pressure drop correction procedure for the specific system be developed. The above general pressure drop equation may not be applicable for all equipment (pulverizers, for example) and systems (for example, where pressure drop is controlled, such as cyclone furnaces).

5.18.12 Steam or Water Pressure Loss. The general equations for correcting steam/water pressure drop between the test and design or contract conditions are as follows:

$$PDiStCr = (PDiSt - C1\ Ht\ DnSt)\frac{DnSt}{DnStd}\left(\frac{MrStd}{MrSt}\right)^2 + C1\ Ht\ DnStd - VhCr, \text{ psi (pa)} \quad (5.18\text{-}13)$$

where

$PDiSt$ = the measured pressure drop, psi (Pa)

$PDiStCr$ = the corrected pressure drop, psi (Pa)

Ht = height between the pressure locations, i.e., the difference in elevation between the downstream and upstream pressure locations, ft (m). Ht will be positive if the fluid is flowing upward.

$DnSt$ = density of the steam/water at the test conditions, lbm/ft^3 (kg/m^3)

$DnStd$ = density of the steam/water at the design conditions, lbm/ft^3 (kg/m^3)

$C1$ = unit conversion factor, 0.00694 for psi (4.788026E + 01 for Pa)

$MrSt$ = mass flow rates of the steam/water at the test condition, lbm/h (kg/s)

$MrStd$ = mass flow rates of the steam/water at the design condition (for feedwater flow and intermediate superheater flows, calculated based on the corrected spray water flow), lbm/h (kg/s)

$VhCr$ = velocity head correction (if applicable) calculated as follows:

$$VhCr = C2\frac{1}{DnSt}\left\{\left[\left(\frac{MrStd}{Aid}\right)^2 - \left(\frac{MrStd}{Aidd}\right)^2\right] + VhCf\left(\frac{MrStd}{Aidd}\right)^2\right\}, \text{ psi (pa)} \quad (5.18\text{-}14)$$

where

$VhCf$ = loss coefficient for the change in cross section geometry involved based on the diameter of the pipe at the terminal point. Parties to test to agree upon value based on geometry involved utilizing fluid flow reference text.

$Aidd$ = area of the pipe at the contractual terminal point, ft^2 (m^2)

Aid = area of the pipe where pressure tap is installed, ft^2 (m^2)

$C2$ = unit conversion factor, 8.327E–12 for psi (5.741E–8 for Pa)

The measured pressure differential across a steam generating unit or a portion of the unit shall be corrected to standard or guarantee conditions due to the difference in mass flow of the flowing fluid and the specific volume between the test condition and the reference conditions. A correction for velocity pressure may also be required if the static pressure measurement tap is located at a point with a cross sectional area different from the terminal point for the guarantee.

5.18.13 Steam Temperature and Desuperheating Spray. Steam temperature and desuperheating spray guarantees must be evaluated based on actual and design superheater (and reheater if applicable) absorptions rather than actual temperature due to potential deviations from the target steam temperature during the test and/or deviations from the design cycle conditions. The actual main steam and reheat mass flow rates utilized to calculate actual absorptions are corrected for off-design test conditions. In general:

- The steam temperature shall be evaluated by comparing the actual superheater/reheater absorption to the design required superheater/reheater absorption.
- Desuperheating spray shall be evaluated based on the calculated spray required for the actual versus design required superheater/reheater absorption.
- The test main steam and reheat mass flow rates utilized to calculate actual absorptions are corrected for off-design load by multiplying by the ratio of the design main steam flow divided by the test main steam flow, $MfStCr$.
- Main steam temperature and superheater spray attemperation for once-through steam generators are not functions of surface arrangement, and corrections are not necessary. Main steam temperature is a matter of

Copyright ASME International
Provided by IHS under license with ASME
No reproduction or networking permitted without license from IHS
Not for Resale

steam generator controls and should be acknowledged as achievable unless there are other limiting design considerations.

- Certain designs, such as divided gas flow units, may require test and/or correction procedures not addressed by this Code (a simplified approach for divided gas flow units is presented below).

Actual and design required superheat and reheater absorptions are defined below. The main steam and reheat steam mass flow rates used to calculate actual absorptions are corrected for off-design main steam flow by multiplying the test main steam/reheat steam flow by the ratio of the design main steam flow divided by the test main steam flow (*MfStCr*). The resulting absorption term generally referred to as "actual absorption" above is referred to as corrected absorption in the following Sections. While a second stage of reheat is not addressed directly, the same principles apply as for the first stage of reheat.

5.18.13.1 Superheater Absorption Corrected, *QrShCr.* The superheater absorption corrected for design main steam flow is calculated from:

$$QrShCr = MrSt32d\ (HSt32 - HSt31) + MrW25\ (HSt31 - HW25) + MrSt46A\ (HSt46A - HSt31),\ \text{Btu/h (W)} \quad (5.18\text{-}15)$$

where

MrSt32d = design main steam flow, lb/h (kg/s)
MrW25 = desuperheating water flow for the test conditions, lb/h (kg/s)
MrSt46A = superheater extraction flow for the test conditions, lb/h (kg/s)

5.18.13.2 Required Superheater Absorption, *RqQrSh.* The required superheater absorption for the design main steam flow is calculated from:

$$RqQrSh = MrSt32d\ (HSt32d - HSt31Cr) + MrSt46Ad\ (HSt46A - HSt31Cr),\ \text{Btu/h (W)} \quad (5.18\text{-}16)$$

where

HSt46A = enthalpy of auxiliary or extraction steam at the test conditions, Btu/lbm (J/kg)
HSt31Cr = enthalpy of saturated steam calculated from the design superheater outlet pressure and corrected superheater pressure drop

Other terms are based on design conditions.

5.18.13.3 Reheater Absorption Corrected, *QrRhCr.* The reheater absorption corrected for design main steam flow is calculated from:

$$QrRhCr = MfStCr\ MrSt33\ (HSt34 - HSt33) + MrW26\ (HSt34 - HW26),\ \text{Btu/h (W)} \quad (5.18\text{-}17)$$

where *MfStCr* is the ratio of the design main steam flow divided by the test main steam flow

5.18.13.4 Required Reheater Absorption, *RqQrRh.* The required reheater absorption for the design main steam flow is calculated from:

$$RqQrRh = MrSt33d\ (HSt34d - Hst33d),\ \text{Btu/h (W)} \quad (5.18\text{-}18)$$

where all terms are the contract or design conditions for the design main steam flow.

5.18.13.5 Corrected Superheat and Reheat Steam Temperature and Desuperheating Spray. When the corrected component absorption is equal to or exceeds the required component absorption, the corrected steam temperature is considered to be the design temperature. The required superheat and reheat spray is based on excess absorption of the specific component and is calculated in accordance with the following equations:

$$MrW25Cr = \left(\frac{QrShCr - RqQrSh}{HSt31Cr - HW25d}\right),\ \text{lbm/h (kg/s)} \quad (5.18\text{-}19)$$

$$MrW26Cr = \left(\frac{QrRhCr - RqQrRh}{HSt34d - HW26d}\right),\ \text{lbm/h (kg/s)} \quad (5.18\text{-}20)$$

Subsection 5.18.13.6 discusses divided gas flow units where steam temperature is controlled by exchanging energy between the reheater and superheater.

If the corrected component absorption is less than the required absorption, the corrected spray flow is zero. The corrected outlet temperature is determined from the outlet enthalpy calculated from the corrected component absorption, design steam and extraction flows, and the design (or corrected) inlet conditions as follows:

Copyright ASME International
Provided by IHS under license with ASME
No reproduction or networking permitted without license from IHS
Not for Resale

$$HSt32Cr = HSt31Cr + \frac{QrShCr - QrAxStCr}{MrSt32d},$$

Btu/lbm (J/kg) (5.18-21)

$$QrAxStCr = MrSt46Ad\ (HSt46A - HSt31Cr),$$

Btu/h (W) (5.18-22)

$$HSt34Cr = HSt33d + \frac{QrRhCr}{MrSt34d},\ \text{Btu/lbm (J/kg)} \quad (5.18\text{-}23)$$

where

$QrAxStCr$ = energy in the superheated auxiliary or extraction steam, Btu/h (W)

5.18.13.6 Corrected Superheat and Reheat Steam Temperature and Desuperheating Spray, Divided Gas Flow Units. On divided gas flow units, reheat steam temperature is controlled by exchanging energy between the reheater and superheater by biasing gas flow between the reheat and superheat pass. Tests are normally conducted by controlling to the design reheat temperature. Superheat absorption can be impacted if the reheat boundary conditions are different from the design conditions. Therefore, superheat and reheat absorption must be evaluated collectively.

For differences in corrected versus required reheat absorption on the order of 5%, a direct exchange in energy between the superheat and reheat can be assumed. The following corrected results are based on this assumption.

An alternate test method is to control to a target reheat outlet steam temperature and/or reheater attemperation flow equivalent to the design required reheat absorption, *RqQrRh*. This method may be required if the differences between the corrected and required reheat absorption are larger than 5%. Due to normal deviations between the desired set point and actual performance, a minor correction in accordance with this Section is still expected. The disadvantage of this test method is that the required versus corrected reheat absorption may not be known at the time of the test.

Main steam and reheat steam temperature are deemed to be met if the sum of the corrected superheat and corrected reheat absorption is greater than the sum of the required superheat and required reheat absorption and the reheat absorption is controllable.

The reheat absorption is deemed to be controllable if the gas biasing dampers are within an operating range capable of achieving the required change in reheat absorption. The required change in reheat absorption is the difference between the corrected reheat absorption and the required reheat absorption, $QrRhCr - RqQrRh$.

Based upon these assumptions, the corrected superheater spray is calculated from the following equation:

$$MrW25Cr = \left(\frac{(QrShCr - RqQrSh) + (QrRhCr - RqQrRh)}{HSt31Cr - HW25d}\right), \quad (5.18\text{-}24)$$

lbm/h (kg/s)

For corrected steam temperature for under absorption conditions, the main steam temperature is normally deemed to be met and the reheat outlet steam temperature determined from the enthalpy calculated based upon the design reheat inlet conditions and the difference in the sum of the corrected reheat and superheat absorption less the required superheat absorption.

$$HSt34Cr = HSt33d + \frac{QrRhCr + (QrShCr - RqQrSh)}{MrSt33}, \quad (5.18\text{-}25)$$

Btu/lbm (J/kg)

5.18.14 Uncertainty of Corrected Results. The uncertainty values calculated and used in this Code are for the as-measured test results only. Several technical issues need to be resolved regarding uncertainty of corrected results. So as not to delay the issuance of this Code, this calculation is not included. When such a procedure is developed, it will be issued as an addendum and become a part of this Code.

5.19 ENTHALPY OF AIR, FLUE GAS, AND OTHER SUBSTANCES COMMONLY REQUIRED FOR ENERGY BALANCE CALCULATIONS

The specific energy (energy per unit mass) of many different flow streams is required to evaluate energy losses and credits for efficiency calculation. A few of the streams are steam, water, air, flue gas, sorbent, coal, and residue (ash and spent sorbent). Specific

Copyright ASME International
Provided by IHS under license with ASME
No reproduction or networking permitted without license from IHS Not for Resale

energy of a flow stream is evaluated by the enthalpy of the flowing material.

The measured quantities that allow determination of enthalpy of substances are the temperature and pressure. Enthalpy is related to temperature and pressure by relationships that are simple for some ranges of temperature and pressure and complicated for other ranges. Accurate determination of enthalpy at all values of temperature and pressure requires the use of tables, charts, or computer software. Engineers who deal with steam almost invariably obtain the enthalpy of steam using tables or software.

Frequently, changes of specific energy of streams other than steam are evaluated using the specific heat and temperature difference:

$$Hn - Hp = MnCpk\,(Tn - Tp)$$

where

$MnCpk$ = the mean specific heat between the two temperatures

The mean specific heat is usually taken as the value at the mean temperature:

$$Tmn = (Tn + Tp)/2$$

In reality, specific heat and enthalpy are both nonlinear functions of temperature and are related by:

$$Hn - Hp = \int_{Tp}^{Tn} MnCpk\,dT$$

As specific heat is usually nonlinear, $MnCpk$ is not equal to the specific heat at temperature Tmn. The differences are slight for small temperature differences; however, a steam generator test may require evaluation of enthalpy differences between temperatures typical of inlet air (50°F) and of flue gas leaving an economizer (700°F).

To gain accuracy, as well as be more "theoretically" correct, this Code requires that enthalpy of substances other than steam be evaluated directly from temperature via enthalpy-temperature curve fits. Pressure effects are neglected because all streams other than water/steam are at low and nearly constant pressure:

When the mean specific heat is required, it is obtained from

$$MnCpk = [H(Tn) - H(Tp)]/(Tn - Tp)$$

The enthalpy correlations presented in this Section are recommended for users interested in general heat transfer calculations involving air and flue gas.

Unless otherwise noted, the reference source is the JANAF Thermochemical Tables [3], and curve fit coefficients developed in accordance with NASA Publication SP-273 [4]. Abbreviated JANAF/NASA correlations are presented below.

For convenience in hand calculations, curves are provided at the end of this Section for calculating enthalpy of air, flue gas, water vapor, and residue. Refer to Subsection 5.19.12 for a description of how these curves are used.

Unless otherwise noted, the curve fits for enthalpy in this Section are in US Customary Units of Btu/lbm. To convert to J/kg, multiply the result by 2,326.

5.19.1 Enthalpy of Air, Btu/lbm (J/kg). Enthalpy of air is a function of the mass of the mixture of dry air and water vapor in air. To determine the enthalpy of dry air, use a water vapor content of zero:

$$HA = (1 - MFrWA)\,HDA + MFrWA\,HWv, \text{ Btu/lbm (J/kg)} \quad (5.19\text{-}1)$$

$$MFrWA = MFrWDA/(1 + MFrWDA), \text{ lbm/lbm (kg/kg)} \quad (5.19\text{-}2)$$

where

HA = enthalpy of wet air, Btu/lbm (J/kg)

HDA = enthalpy of dry air, Btu/lbm (J/kg). Refer to Subsection 5.19.10 below.

HWv = enthalpy of water vapor, Btu/lbm (J/kg). Refer to Subsections 5.19.4 and 5.19.10 below.

$MFrWDA$ = mass fraction of water vapor in dry air, lbm H_2O/lbm dry air (kg/kg). This is the standard method for expressing moisture in air.

$MFrWA$ = mass fraction of water vapor in wet air, lbm H_2O/lbm wet air (kg/kg)

5.19.2 Enthalpy of Flue Gas, Btu/lbm (J/kg). "Wet flue gas" as defined by the calculations in this Code is composed of dry gaseous products of combustion and water vapor. Solid residue may also be entrained in the gas stream. The enthalpy of wet flue gas accounts for the enthalpies of all of these components. If the

Copyright ASME International
Provided by IHS under license with ASME
No reproduction or networking permitted without license from IHS
Not for Resale

enthalpy of dry flue gas is desired, the water and solid residue components are zero:

$$HFg = (1 - MFrWFg)\ HDFg + MFrWFg\ HWv + MFrRsFg\ HR, \text{ Btu/lbm J/kg} \quad (5.19\text{-}3)$$

where

HFg = enthalpy of wet flue gas, Btu/lbm (J/kg)
$HDFg$ = enthalpy of dry flue gas, Btu/lbm (J/kg). Refer to Subsection 5.19.10 below.
HRs = enthalpy of residue, Btu/lbm (J/kg). Refer to Subsections 5.19.3 and 5.19.10 below.
$MFrWFg$ = mass fraction of water in wet gas, lbm H_2O/lbm wet gas (kg/kg). Refer to Subsection 5.12.10 for calculation.
$MFrRsFg$ = mass fraction of residue in wet gas, lbm/lbm wet gas (kg/kg). Refer to Subsection 5.12.11 for calculation. The sensible heat of residue may be omitted if sorbent is not utilized and the ash in the fuel is less than 15 lbm/MBtu input (i.e., where 10,000 × $MpAsF/HHVF$ is less than 15).

5.19.3 Enthalpy of Dry Residue, Btu/lbm. Residue is composed of numerous complex compounds and may include spent sorbent products when sorbent is utilized. One approach for determining enthalpy of residue would be to determine or estimate (calculate) the major constituents in the residue and use a mass weighted average of the enthalpy for each component to determine the average enthalpy. In the interest of simplicity and considering the insignificant impact of inaccuracies in calculating the enthalpy of residue on the energy balance calculations within the scope of this Code compared to the error in measuring the mass flow rate of residue streams, this Code adopts the curve fit below for all dry residue streams. It was developed from data for SiO_2, 77°F (25°C) reference temperature and is applicable from 0°F to 2,000°F (–20°C to 1,100°C). This Code adopts the fifth order correlations described in Subsection 5.19.10 for all dry residue streams. The following abbreviated equation developed from the fifth order curve fit may be used for hand calculations:

$$HRs = 0.16T + 1.09\text{E}{-4}\ T^2 - 2.843\text{E}{-8}\ T^3 - 12.95, \text{ Btu/lbm} \quad (5.19\text{-}4)$$

where

T = temperature, °F

5.19.4 Enthalpy of Water Vapor, Btu/lbm. The coefficients for the JANAF/NASA fifth order curve fit are given in Subsection 5.19.10 below. The following simplified curve fit for calculating credits and losses due to moisture may also be used. The results are within 0.3% of the JANAF values for temperatures between 0°F and 1,000°F (–20°C–540°C):

$$HWv = 0.4408T + 2.381\text{E}{-5}\ T^2 + 9.638\text{E}{-9}\ T^3 - 34.1, \text{ Btu/lbm} \quad (5.19\text{-}5)$$

where

T = temperature, °F

NOTE: The reference temperature is 77°F (25°C).

5.19.5 Enthalpy of Steam/Water at 1 psia, Btu/lbm. The enthalpy of steam at 1 psia is required to determine the loss/credit of water that enters the boundary in the liquid state and leaves the boundary in the flue gas in a vaporous state. An example is the calculation of the water from fuel losses. The following equation may be used in lieu of the ASME Steam Tables for temperatures from 200°F to 1,000°F (95°C to 540°C):

$$HSt = 0.4329T + 3.958\text{E} - 5T^2 + 1062.2, \text{ Btu/lbm} \quad (5.19\text{-}6)$$

$$HW = T - 32, \text{ Btu/lbm} \quad (5.19\text{-}7)$$

where

T = temperature, °F

NOTE: The reference temperature is 32°F (0°C).

5.19.6 Enthalpy of Coal, Btu/lbm. The correlation for enthalpy of coal is based upon the constituents in coal as determined from a Proximate Analysis. It is developed from N.Y. Kirov's correlation as reported in *Chemistry of Coal Utilization* [5]. The original specific heat equations were integrated to obtain enthalpy at a reference temperature of 77°F (25°C). The polynomial for fixed carbon was reduced by one order for simplicity. The enthalpy of ash was developed from SiO_2 for consistency with enthalpy of residue.

The correlation is not applicable for frozen coal or for temperatures above which devolatization occurs:

$$HCoal = MFrFc\ HFc + MFrVm1\ HVm1 + MFrVm2\ HVm2 \quad (5.19\text{-}8)$$

Copyright ASME International
Provided by IHS under license with ASME
No reproduction or networking permitted without license from IHS
Not for Resale

$$+ MFrWF\ HW + MFrAsF\ HR, \text{ Btu/lbm}$$

$$HFc = 0.152T + 1.95\ \text{E}{-4}\ T^2 - 12.860, \text{ Btu/lbm} \quad (5.19\text{-}9)$$

$$HVm1 = 0.38T + 2.25\text{E}{-4}\ T^2 - 30.594, \text{ Btu/lbm} \quad (5.19\text{-}10)$$

$$HVm2 = 0.70T + 1.70\text{E}{-4}\ T^2 - 54.908, \text{ Btu/lbm} \quad (5.19\text{-}11)$$

$$HRs = 0.17T + 0.80\text{E}{-4}\ T^2 - 13.564, \text{ Btu/lbm} \quad (5.19\text{-}12)$$

$$HW = T - 77, \text{ Btu/lbm} \quad (5.19\text{-}13)$$

$$MFrVm = MFrVm1 + MFrVm2, \text{ lbm/lbm fuel as-fired} \quad (5.19\text{-}14)$$

$$MFrVmCr = MFrVm1/(1 - MFrAsF - MFrWF), \text{ lbm/lbm fuel dry-ash free} \quad (5.19\text{-}15)$$

If $MFrVmCr \leqq 0.10$, then

$$MFrVm2 = MFrVm \quad (5.19\text{-}16)$$

$$MFrVm1 = 0.0 \quad (5.19\text{-}17)$$

If $MFrVmCr > 0.10$, then

$$MFrVm2 = 0.10(1 - MFrAsF - MFrWF) \quad (5.19\text{-}18)$$

$$MFrVm1 = MFrVm - MFrVm2 \quad (5.19\text{-}19)$$

where

$MFrFc$ = mass fraction of fixed carbon, lbm/lbm coal as-fired
$MFrAsF$ = mass fraction of ash, lbm/lbm coal as-fired
$MFrWF$ = mass fraction of water, lbm/lbm coal as-fired
$MFrVm$ = mass fraction of volatile water, lbm/lbm coal as-fired
$MFrVm1$ = mass fraction of primary volatile matter, lbm/lbm coal as-fired
$MFrVm2$ = mass fraction of secondary volatile matter, lbm/lbm coal, as-fired
$MFrVmCr$ = mass fraction of volatile matter on a dry and ash free basis, lbm/lbm coal, dry-ash free
T = temperature, °F
Hk = enthalpy of coal component k, Btu/lbm

5.19.7 Enthalpy of Fuel Oil, Btu/lbm. The enthalpy of fuel oil has been correlated as a function of specific gravity at 60°F (16°C) in °API[6].

$$HFo = C1 + C2\ API + C3\ T + C4\ API\ T + (C5 + C6\ API)T^2, \text{ Btu/lbm} \quad (5.19\text{-}20)$$

$$API = (141.5 - 131.5Sg)/Sg \quad (5.19\text{-}21)$$

$$Sg = Dn/62.4 \quad (5.19\text{-}22)$$

where

HFo = enthalpy of fuel oil, Btu/lbm
T = temperature, °F
API = density at 60°F (16°C), °API
Dn = density at 60°F (16°C), lbm/ft^3
Sg = specific gravity at 60°F (16°C), lbm/lbm
$C1$ = −30.016
$C2$ = −0.11426
$C3$ = +0.373
$C4$ = +0.143E−2
$C5$ = +0.2184E−3
$C6$ = +7.0E−7

5.19.8 Enthalpy of Natural Gas, Btu/lbm. The following curve fit was developed from the JANAF/NASA data for a typical natural gas fuel analysis of 90%

Copyright ASME International
Provided by IHS under license with ASME
No reproduction or networking permitted without license from IHS
Not for Resale

methane (CH_4), 5% ethane (C_2H_6), and 5% nitrogen. It is valid from 0°F to 500°F. Natural gas is normally near the reference temperature of 77°F (25°C), and thus utilizing a typical analysis for natural gas is sufficiently accurate for efficiency calculations. For manufactured gases that enter the steam generator at an elevated temperature, the enthalpy should be determined based upon the actual constituents in the gas.

$$HGF = 0.4693T + 0.17523E{-}3T^2 + 0.4326E{-}7T^3 - 37.2, \text{ Btu/lbm} \quad (5.19\text{-}23)$$

where

T = temperature, °F

5.19.9 Enthalpy of Limestone Sorbent, Btu/lbm. The following correlation is based upon JANAF/NASA data for $CaCO_3$ with a correction for water. It is valid from 0°F to 200°F:

$$HSb = (1 - MFrH2OSb)\,HCc + MFrH2OSb\,(T - 77), \text{ Btu/lbm} \quad (5.19\text{-}24)$$

$$HCc = 0.179T + 0.1128E - 3T^2 - 14.45, \text{ Btu/lbm} \quad (5.19\text{-}25)$$

where

$MFrWSb$ = mass fraction of water in sorbent, lbm/lbm sorbent

T = temperature, °F

5.19.10 Enthalpy Coefficients for Abbreviated JANAF/NASA Correlation. The enthalpy/temperature curves in this Section are based upon the following abbreviated enthalpy correlation and the coefficients tabulated below. The reference temperature is 77°F (25°C):

$$Hk = C0 + C1\,TK + C2\,TK^2 + C3\,TK^3 + C4\,TK^4 + C5\,TK^5, \text{ Btu/lbm} \quad (5.19\text{-}26)$$

$$TK = (T + 459.7)/1.8, \text{ K} \quad (5.19\text{-}27)$$

where

Hk = enthalpy of the constituents, Btu/lbm

T = temperature, °F

TK = temperature, K

Coefficients for dry air are based upon the composition of air as defined in this Code.

Coefficients for dry air for temperatures from 255 K to 1,000 K:

$C0$ = −0.1310658E+03	$C1$ = +0.4581304E+00
$C2$ = −0.1075033E−03	$C3$ = +0.1778848E−06
$C4$ = −0.9248664E−10	$C5$ = +0.16820314E−13

Coefficients for dry air temperature above 1000 K:

$C0$ = −0.1177723E+03	$C1$ = +0.3716786E+00
$C2$ = +0.8701906E−04	$C3$ = −0.2196213E−07
$C4$ = +0.2979562E−11	$C5$ = −0.1630831E−15

Coefficients for water vapor temperatures from 255 K to 1000 K:

$C0$ = −0.2394034E+03	$C1$ = +0.8274589E+00
$C2$ = −0.1797539E−03	$C3$ = +0.3934614E−06
$C4$ = −0.2415873E−09	$C5$ = +0.6069264E−13

Coefficients for water vapor temperatures above 1000 K:

$C0$ = −0.1573460E+03	$C1$ = +0.5229877E+00
$C2$ = +0.3089591E−03	$C3$ = −0.5974861E−07
$C4$ = +0.6290515E−11	$C5$ = −0.2746500E−15

Coefficients for dry flue gas are based on a flue gas composition of 15.3% CO_2, 3.5% O_2, 0.1% SO_2, and 81.1% atmospheric nitrogen by volume. The enthalpy of *dry* flue gas does not vary significantly for fossil fuels because atmospheric nitrogen is the predominant component. It varies between 80% for coal to approximately 88% for natural gas. The difference is predominately CO_2 and O_2, which have similar heat capacity characteristics which are not significantly different from those of atmospheric nitrogen. For typical hydrocarbon fuels combusted with less than 300% excess air, the following coefficients are sufficiently accurate for most heat transfer calculations. For unusual fuels such as manufactured gases, hydrogen and/or combustion processes utilizing an oxidizing medium other than air, refer to Subsection 5.19.11 below.

Coefficients for dry flue gas for temperatures from 255 K to 1,000 K:

Copyright ASME International
Provided by IHS under license with ASME
No reproduction or networking permitted without license from IHS
Not for Resale

$C0$ = −0.1231899E+03 $C1$ = +0.4065568E+00
$C2$ = +0.5795050E−05 $C3$ = +0.6331121E−07
$C4$ = −0.2924434E−10 $C5$ = +0.2491009E−14

Coefficients for dry flue gas for temperatures above 1,000 K:

$C0$ = −0.1180095E+03 $C1$ = +0.3635095E+00
$C2$ = +0.1039228E−03 $C3$ = −0.2721820E−07
$C4$ = +0.3718257E−11 $C5$ = −0.2030596E−15

Coefficients for residue of unknown composition and sand for temperatures from 255 K to 1,000 K. The following coefficients are based upon a smoothed curve fit for SiO_2 around the discontinuous point at approximately 1,000 K:

$C0$ = −0.3230338E+02 $C1$ = −0.2431404E+00
$C2$ = +0.1787701E−02 $C3$ = −0.2598230E−05
$C4$ = +0.2054892E−08 $C5$ = −0.6366886E−12

Coefficients for residue of unknown composition and sand for temperatures above 1,000 K:

$C0$ = +0.1822637E+02 $C1$ = +0.3606155E−01
$C2$ = +0.4325735E−03 $C3$ = −0.1984149E−06
$C4$ = +0.4839543E−10 $C5$ = −0.4614088E−14

5.19.11 Enthalpy Coefficients for Gaseous Mixtures — General. For normal flue gas mixtures, refer to coefficients for dry flue gas above. The enthalpy coefficients for gaseous mixtures not covered above may be calculated from the mass fraction of the constituents, MFr_k, in the gaseous mixture in accordance with:

$$Cf_{i\,mix} = \Sigma MFr_k\, Cf_{ik} \qquad (5.19\text{-}28)$$

where

Cf_{ik} = coefficient i for the constituent k as listed in this text or derived from an appropriate source

If the long procedure is used to derive coefficients for a specific flue gas mixture from a specific fuel (or oxidant), it is recommended that the mixture be on a dry gas basis based on a typical excess air. The moisture content (and residue, if applicable) at the location in question can then be used in conjunction with the dry flue gas to calculate the enthalpy of wet flue gas in accordance with Subsection 5.19.2. The enthalpy coefficients for dry flue gas are applicable over a wide range of excess air; therefore, it is usually only necessary to calculate the dry flue gas coefficients once for an average fuel.

Coefficients for O_2 temperatures from 255 K to 1,000 K:

$C0$ = −0.1189196E+03 $C1$ = +0.4229519E+00
$C2$ = −0.1689791E−03 $C3$ = +0.3707174E−06
$C4$ = −0.2743949E−09 $C5$ = +0.7384742E−13

Coefficients for O_2 temperatures above 1,000 K:

$C0$ = −0.1338989E+03 $C1$ = +0.4037813E+00
$C2$ = +0.4183627E−04 $C3$ = −0.7385320E−08
$C4$ = +0.9431348E−12 C5 = −0.5344839E−16

Coefficients for N_2 (elemental) temperatures from 255 K to 1,000 K:

$C0$ = −0.1358927E+03 $C1$ = +0.4729994E+00
$C2$ = −0.9077623E−04 $C3$ = +0.1220262E−06
$C4$ = −0.3839777E−10 $C5$ = −0.3563612E−15

Coefficients for N_2 (elemental) temperatures above 1,000 K:

$C0$ = −0.1136756E+03 $C1$ = +0.3643229E+00
$C2$ = +0.1022894E−03 $C3$ = −0.2678704E−07
$C4$ = +0.3652123E−11 $C5$ = −0.1993357E−15

Coefficients for N_{2a} (atmospheric) temperatures from 255 K to 1,000 K:

$C0$ = −0.1347230E+03 $C1$ = +0.4687224E+00
$C2$ = −0.8899319E−04 $C3$ = +0.1198239E−06
$C4$ = −0.3771498E−10 $C5$ = −0.3502640E−15

Coefficients for N_{2a} (atmospheric) temperatures above 1,000 K:

$C0$ = −0.1129166E+03 $C1$ = +0.3620126E+00
$C2$ = +0.1006234E−03 $C3$ = −0.2635113E−07
$C4$ = +0.3592720E−11 $C5$ = −0.1960935E−15

Coefficients for CO_2 temperatures from 255 K to 1,000 K:

$C0$ = −0.8531619E+02 $C1$ = +0.1951278E+00
$C2$ = +0.3549806E−03 $C3$ = −0.1790011E−06

Copyright ASME International
Provided by IHS under license with ASME
No reproduction or networking permitted without license from IHS
Not for Resale

$C4$ = +0.4068285E–10 $C5$ = +0.1028543E–16

Coefficients for CO_2 temperatures above 1,000 K:

$C0$ = –0.1327750E+03 $C1$ = +0.3625601E+00
$C2$ = +0.1259048E–03 $C3$ = –0.3357431E–07
$C4$ = +0.4620859E–11 $C5$ = –0.2523802E–15

Coefficients for Ar temperatures from 255 K to 1,000 K:

$C0$ = –0.6674373E+02 $C1$ = +0.2238471E+00
$C2$ = +0.0000000E+00 $C3$ = +0.0000000E+00
$C4$ = +0.0000000E+00 $C5$ = +0.0000000E+00

Coefficients for Ar temperatures above 1,000 K:

$C0$ = –0.6674374E+02 $C1$ = +0.2238471E+00
$C2$ = +0.0000000E+00 $C3$ = +0.0000000E+00
$C4$ = +0.0000000E+00 $C5$ = +0.0000000E+00

Coefficients for SO_2 temperatures from 255 K to 1,000 K:

$C0$ = –0.6741655E+02 $C1$ = +0.1823844E+00
$C2$ = +0.1486249E–03 $C3$ = +0.1273719E–07
$C4$ = –0.7371521E–10 $C5$ = +0.2857647E–13

Coefficients for SO_2 temperatures above 1,000 K:

$C0$ = –0.1037132E+03 $C1$ = +0.2928581E+00
$C2$ = +0.5500845E–04 $C3$ = –0.1495906E–07
$C4$ = +0.2114717E–11 $C5$ = –0.1178996E–15

Coefficients for CO temperatures 255 K to 1,000 K:

$C0$ = –0.1357404E+03 $C1$ = +0.4737722E+00
$C2$ = –0.1033779E–03 $C3$ = +0.1571692E–06
$C4$ = –0.6486965E–10 $C5$ = +0.6117598E–14

Coefficients for CO temperatures above 1,000 K:

$C0$ = –0.1215554E+03 $C1$ = +0.3810603E+00
$C2$ = +0.9508019E–04 $C3$ = –0.2464562E–07
$C4$ = +0.3308845E–11 $C5$ = –0.1771265E–15

Coefficients for H_2 temperatures from 255 K to 1,000 K:

$C0$ = –0.1734027E+04 $C1$ = +0.5222199E+01
$C2$ = +0.3088671E–02 $C3$ = –0.4596273E–05
$C4$ = +0.3326715E–08 $C5$ = –0.8943708E–12

Coefficients for H_2 temperatures above 1,000 K:

$C0$ = –0.1529504E+04 $C1$ = +0.5421950E+01
$C2$ = +0.5299891E–03 $C3$ = –0.9905053E–09
$C4$ = –0.9424918E–11 $C5$ = +0.8940907E–15

Coefficients for H_2S temperatures from 255 K to 1,000 K:

$C0$ = –0.1243482E+03 $C1$ = +0.4127238E+00
$C2$ = –0.2637594E–04 $C3$ = +0.1606824E–06
$C4$ = –0.8345901E–10 $C5$ = –0.1395865E–13

Coefficients for H_2S temperatures above 1,000 K:

$C0$ = –0.1001462E+03 $C1$ = +0.2881275E+00
$C2$ = +0.2121929E–03 $C3$ = –0.5382326E–07
$C4$ = +0.7221044E–11 $C5$ = –0.3902708E–15

5.19.12 Curves for Calculating Enthalpy. The abbreviated JANAF/NASA correlations for air and flue gas are fifth order polynomials. For convenience in hand calculations, specific heat curves for dry air, water vapor, dry flue gas and residue are provided on Figs. 5.19-1 through 5.19-4. These curves show the *mean* specific heat of the constituent between the temperatures desired and 77°F (25°C). To obtain enthalpy (H) for any of the constituents (77°F reference), multiply the mean specific heat times the temperature (T) minus 77°F:

$$Hk = MnCpk\ (T - 77),\ \text{Btu/lbm} \qquad (5.19\text{-}29)$$

The resolution of the curves is such that the calculated result will be within 0.1 Btu/lbm of the actual correlations. Explanations are given above for calculation of enthalpy of mixtures such as wet air and wet flue gas.

For some calculations, the instantaneous specific heat (as an approximation of mean specific heat over a small temperature band) at a specific temperature is required, such as for the calculation of corrected air heater exit gas temperature. Instantaneous specific heat can be obtained from the mean specific heat curves by entering the curve with a temperature (Tc) equal to two times the temperature (T) desired minus 77°F:

Copyright ASME International
Provided by IHS under license with ASME
No reproduction or networking permitted without license from IHS Not for Resale

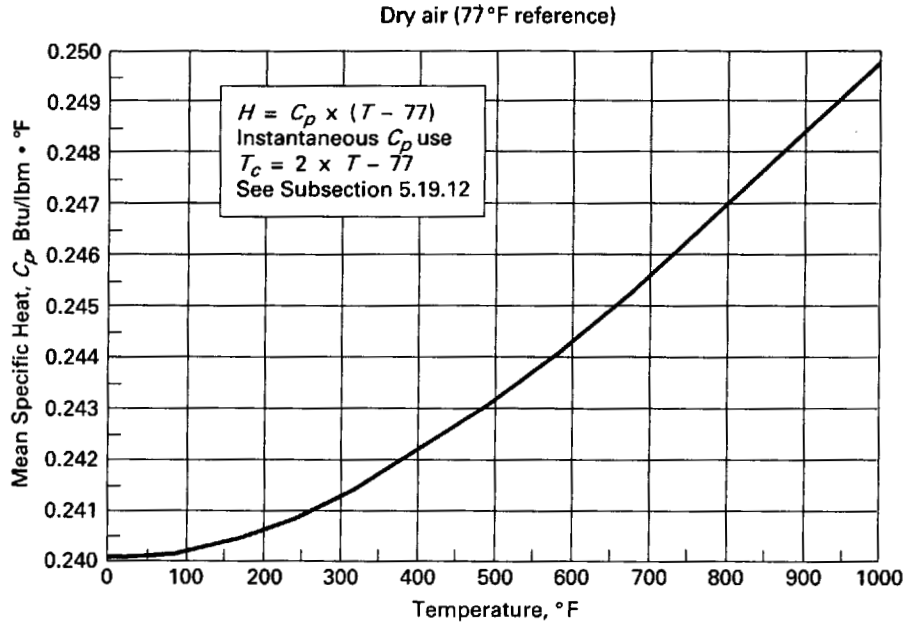

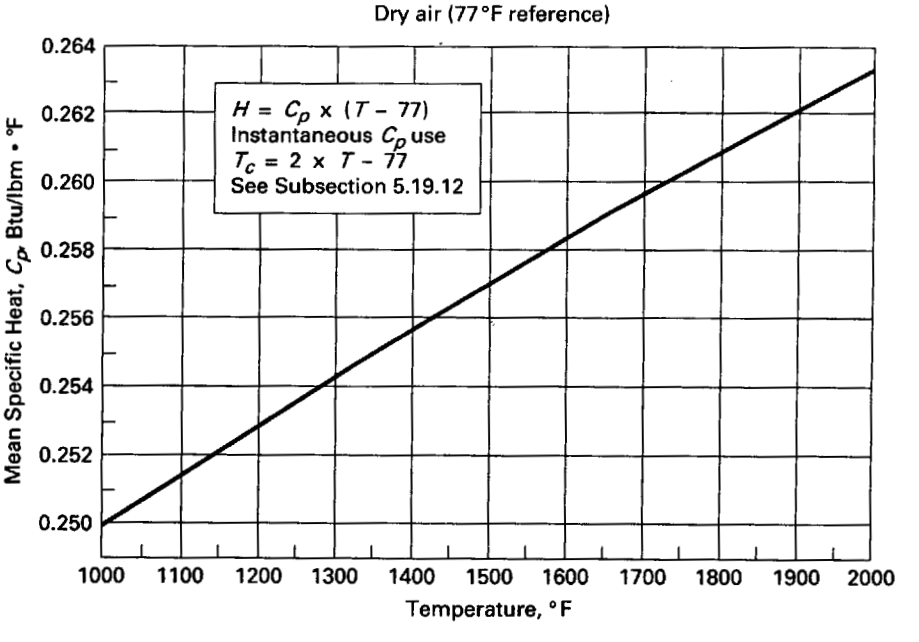

FIG. 5.19-1 MEAN SPECIFIC HEAT OF DRY AIR VERSUS TEMPERATURE

Copyright ASME International
Provided by IHS under license with ASME
No reproduction or networking permitted without license from IHS
Not for Resale

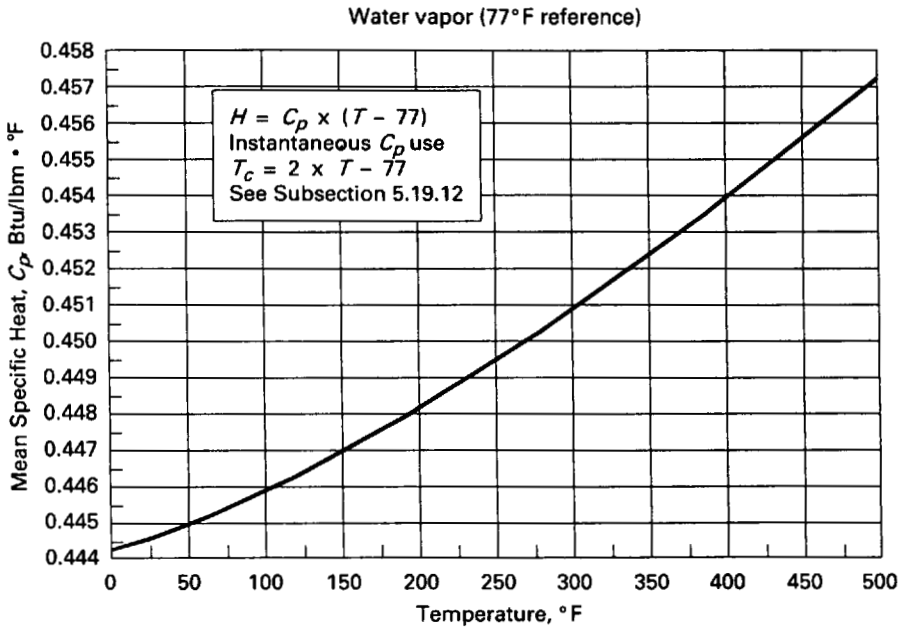

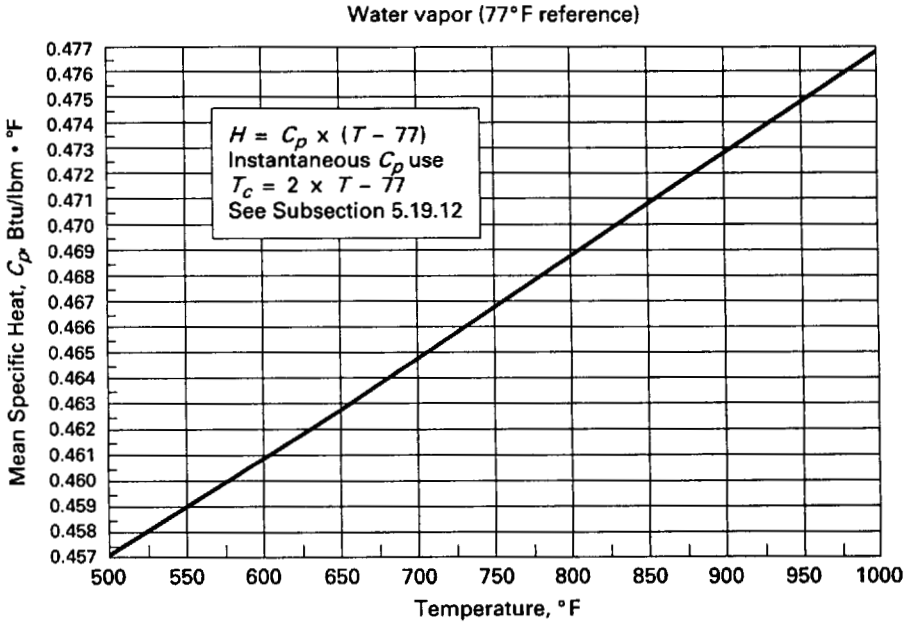

FIG. 5.19-2 MEAN SPECIFIC HEAT OF WATER VAPOR VERSUS TEMPERATURE

Copyright ASME International
Provided by IHS under license with ASME
No reproduction or networking permitted without license from IHS
Not for Resale

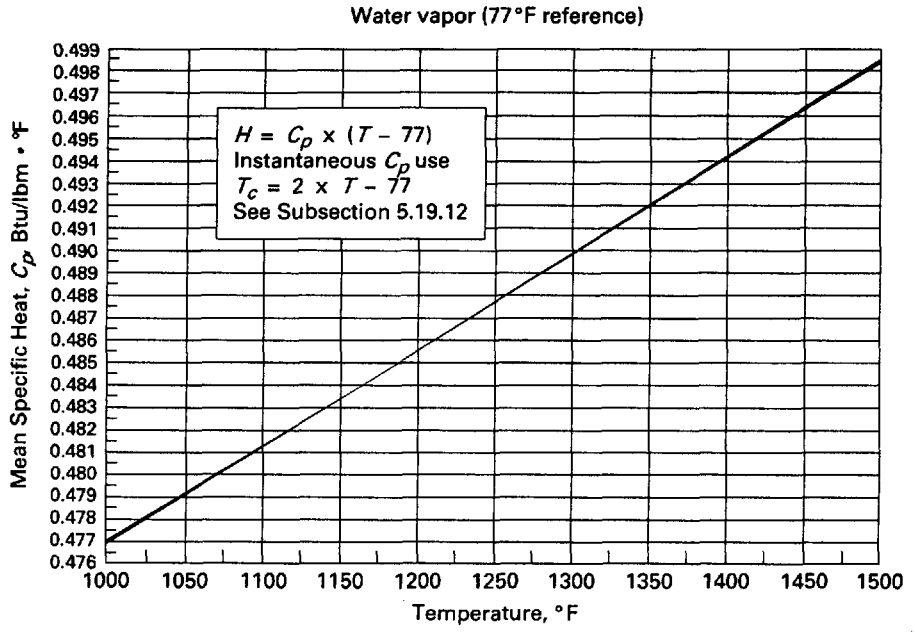

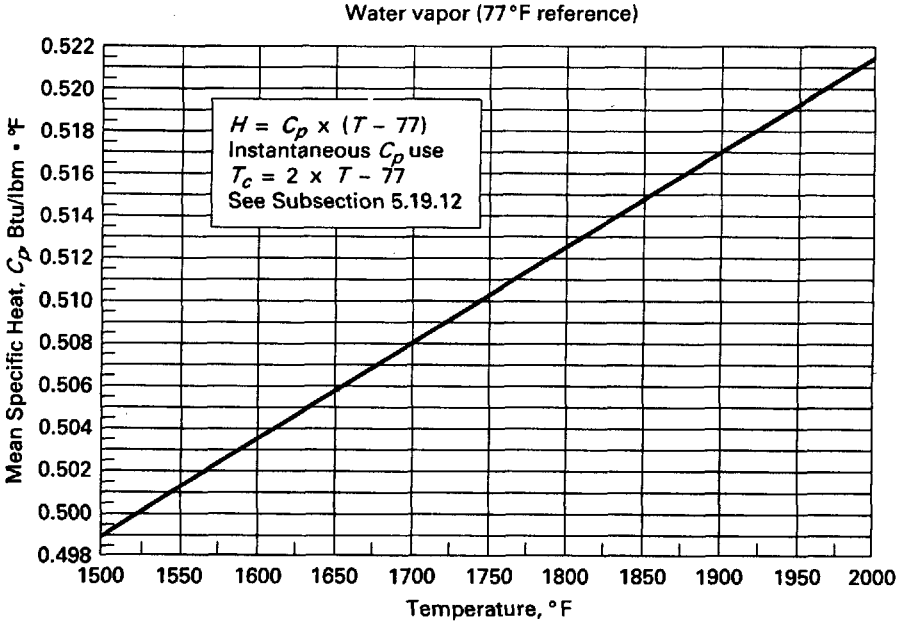

FIG. 5.19-2 MEAN SPECIFIC HEAT OF WATER VAPOR VERSUS TEMPERATURE (CONT'D)

Copyright ASME International
Provided by IHS under license with ASME
No reproduction or networking permitted without license from IHS Not for Resale

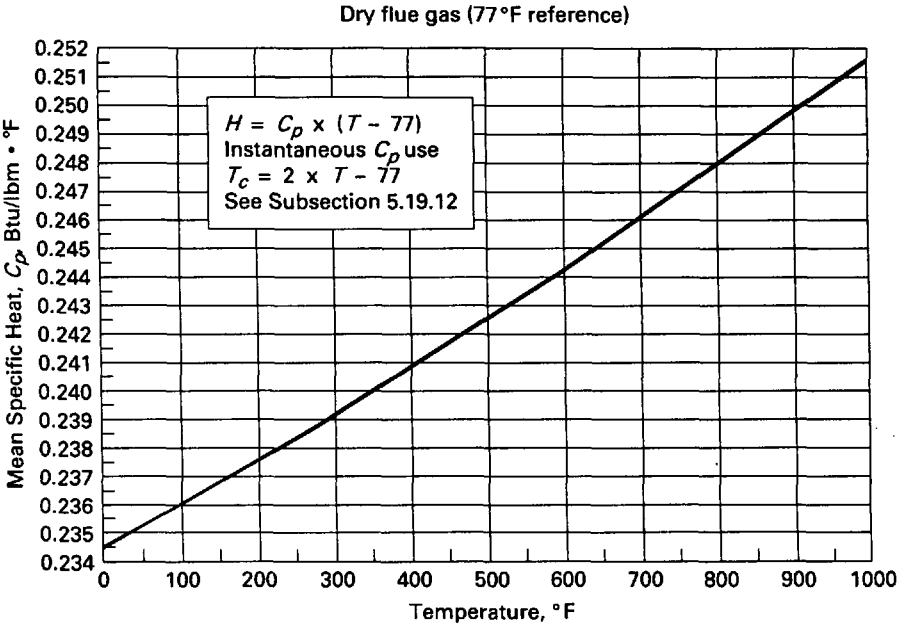

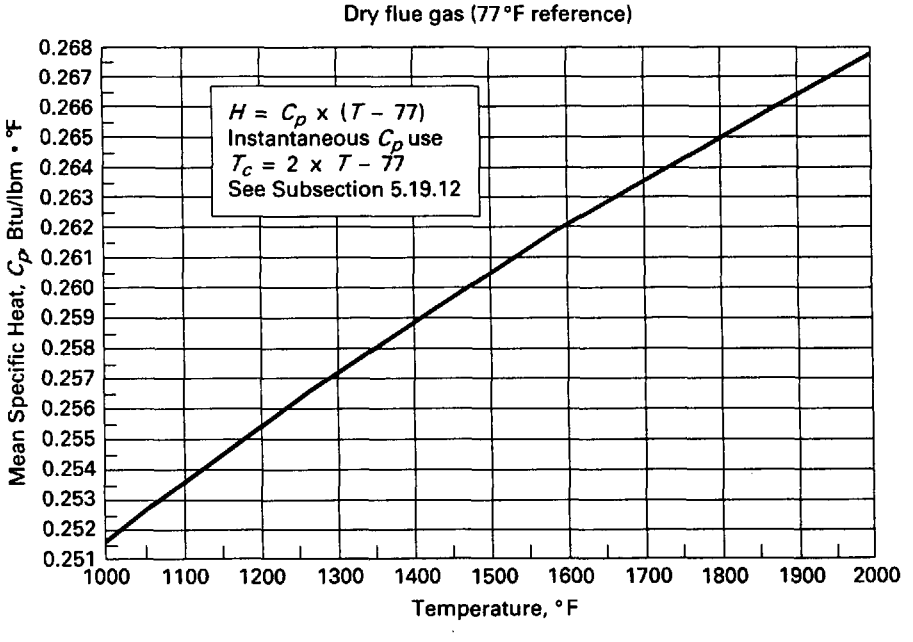

FIG. 5.19-3 MEAN SPECIFIC HEAT OF DRY FLUE GAS VERSUS TEMPERATURE

Copyright ASME International
Provided by IHS under license with ASME
No reproduction or networking permitted without license from IHS
Not for Resale

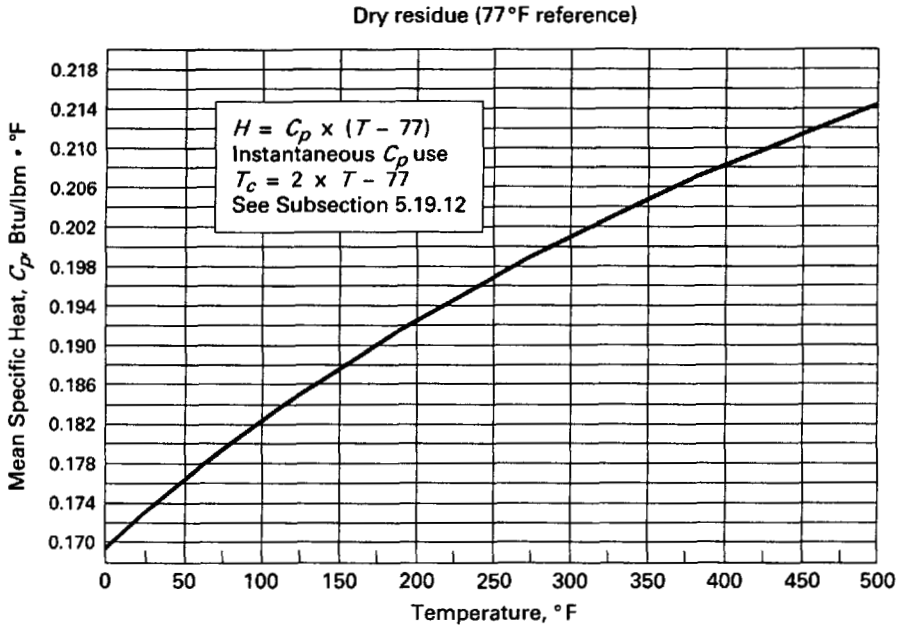

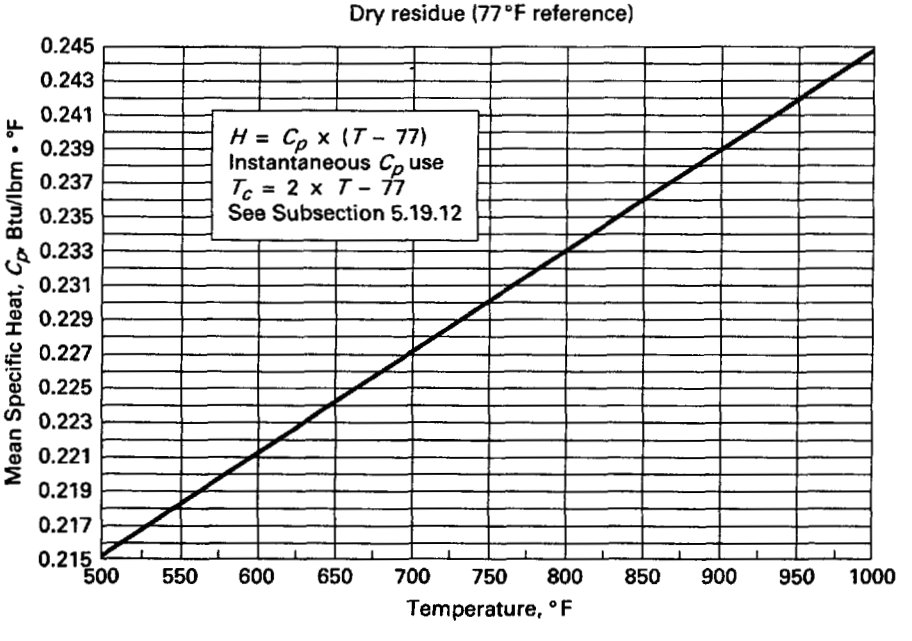

FIG. 5.19-4 MEAN SPECIFIC HEAT OF DRY RESIDUE VERSUS TEMPERATURE

Copyright ASME International
Provided by IHS under license with ASME
No reproduction or networking permitted without license from IHS
Not for Resale

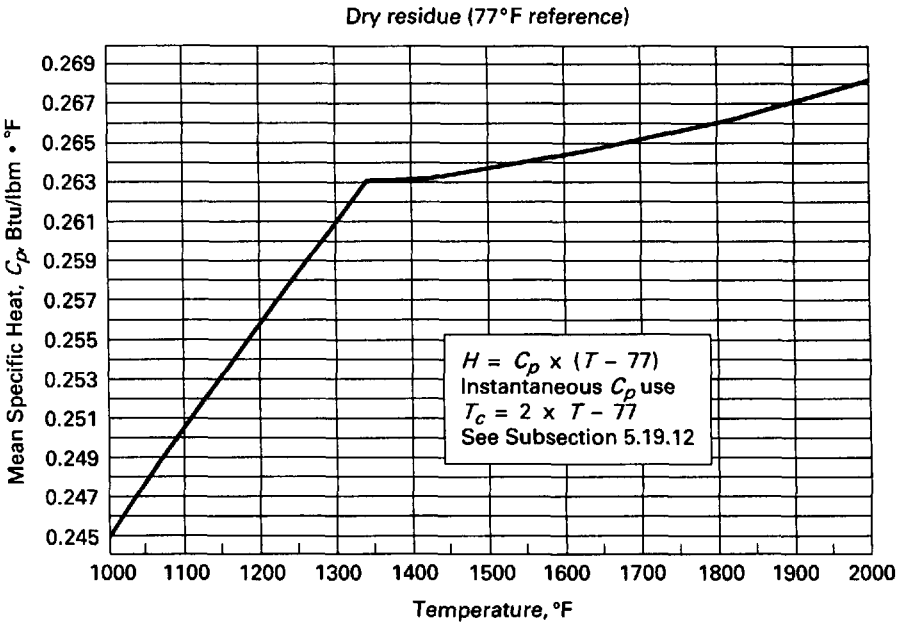

FIG. 5.19-4 MEAN SPECIFIC HEAT OF DRY RESIDUE VERSUS TEMPERATURE (CONT'D)

Copyright ASME International
Provided by IHS under license with ASME
No reproduction or networking permitted without license from IHS
Not for Resale

$$Tc = 2T - 77, °F \qquad (5.19\text{-}30)$$

For example, to obtain the instantaneous specific heat at 300°F, enter the mean specific heat curve with a temperature of 523°F.

5.20 CALCULATION ACRONYMS

5.20.1 Basis for Section 5 Acronyms. The acronyms used throughout this Section (except for uncertainty) are built from symbols from the following groups and arranged in the following sequence:

PROPERTY > FUNCTION > (EQUIPMENT, STREAM, EFFICIENCY) > (LOCATION, COMPONENT, CONSTITUENT) > CORRECTION

5.20.1.1 Property Symbols

Af	Flat projected surface area
Aid	Area, inside dimension
Cp	Mean specific heat at constant pressure
D	Dry
Dn	Density
H	Enthalpy
Hca	Convection heat transfer coefficient
HHV	Higher heating value, mass basis
HHVcv	Higher heating value, constant volume basis
HHVv	Higher heating value, volume basis
Hra	Radiation heat transfer coefficient
Hrca	Combined radiation and convection heat transfer coefficient
Ht	Height
Hw	Insulation heat transfer coefficient
M	Mass
Mo	Mole
Mp	Percent mass
Mq	Mass per unit of energy
Mr	Mass rate
Mv	Mass volume
Mw	Molecular weight
P	Pressure
Pa	Atmospheric pressure
Pp	Partial pressure
Ps	Saturation pressure
Q	Energy
Qp	Percent fuel input energy
Qr	Heat transfer rate
R	Universal gas constant
Ra	Radiation
Rhm	Relative humidity
Rq	Required
Se	Stack effect
Sg	Specific gravity
T	Temperature
Tdb	Dry-bulb temperature
Thf	Hot face temperature
Twb	Wet-bulb temperature
V	Velocity
Vh	Velocity head
Vp	Percent Volume

5.20.1.2 Function Symbols

Ad	Additional
Di	Difference (Delta)
Fr	Fractional
Mn	Mean
Sm	Sum

5.20.1.3 Equipment, Stream, and Efficiency Symbols

A	Air
Ac	Air preheater coil
Ah	Air heater
Al	Air leakage
Ap	Ash pit
Aq	Air quality control equipment
As	Ash
B	Credit
Bd	Blowdown
C	Carbon
Ca	Calcium
Cb	Carbon burned
Cbo	Carbon burnout
Cc	Calcium carbonate
Cf	Coefficient
Ch	Calcium hydroxide
Clh	Calcination and/or hydration
Cm	Combustion
CO	Carbon monoxide
CO2	Carbon dioxide
Coal	Coal
Cw	Cooling water
E	Efficiency, percent
Ec	Economizer
El	Electrical
Ev	Evaporation
F	Fuel
Fc	Fixed carbon
Fg	Flue gas
Fo	Fuel oil
G	Gaseous fuel
Gr	Gross
Hc	Hydrocarbons, dry basis
I	Input
In	Inerts
L	Loss
Lg	Leakage

Copyright ASME International
Provided by IHS under license with ASME
No reproduction or networking permitted without license from IHS
Not for Resale

Mc	Magnesium carbonate
Mh	Magnesium hydroxide
N_2	Nitrogen
N_{2a}	Atmospheric nitrogen
NO_x	Nitrous oxides
O	Output
O_2	Oxygen
Pc	Products of combustion
Pcu	Products of combustion uncorrected for sulfur capture
Pr	Pulverizer rejects
Rh	Reheat
Rs	Residue
Ry	Recycle
S	Sulfur
Sb	Sorbent
Sc	Sulfur capture
Sh	Superheat
Slf	Sulfation
SO_2	Sulfur dioxide
Src	Surface radiation and convection
Ssb	Spent sorbent
St	Steam
Th	Theoretical
To	Total
Ub	Unburned
W	Water
Wv	Water vapor
X	Auxiliary
Xp	Percent excess
Xr	*X*-ratio

5.20.1.4 Location, Area, Component, Constituent Symbols

d	Design
En	Inlet or entering
f	Fuel, specific or related
j	Fuel, sorbent component
k	Fuel, sorbent constituent
Lv	Outlet, exit, or leaving
Re	Reference
z	Location (refer to Figs. 1.4-1 through 1.4-7 for specific locations)

5.20.1.5 Correction Symbol

Cr	Reading or computational correction

5.20.2 List of Acronyms Used

See Tables 5.20.2-1 and 5.20.2-2.

Copyright ASME International
Provided by IHS under license with ASME
No reproduction or networking permitted without license from IHS
Not for Resale

TABLE 5.20.2-1
ACRONYMS

Acronyms	Description	Units
Afz	Flat projected surface area for location *z*	ft² (m²)
ApAf	Flat projected area of ash pit hopper opening	ft² (m²)
API	Density of oil	Degrees API
DnA	Density of wet air	lbm/ft³ (kg/m³)
DnAFg	Density of wet air or flue gas	lbm/ft³ (kg/m³)
DnFg	Density of wet flue gas	lbm/ft³ (kg/m³)
DnGF	Density of gaseous fuel	lbm/ft³ (kg/m³)
DnSt	Density of steam/water	lbm/ft³ (kg/m³)
DVpCO	Percent CO in flue gas, dry basis	% volume
DVpCO₂	Percent CO_2 in flue gas, dry basis	% volume
DVpHc	Percent hydrocarbons in flue gas, dry basis	% volume
DVpN2a	Percent nitrogen (atmospheric) in flue gas, dry basis	% volume
DVpN2f	Percent nitrogen from fuel in flue gas, dry basis	% volume
DVpNOx	Percent NO_x in flue gas, dry basis	% volume
DVpO2	Percent O_2 in flue gas, dry basis	% volume
DVpSO2	Percent SO_2 in flue gas, dry basis	% volume
ECm	Combustion efficiency	%
EF	Fuel efficiency	%
EGr	Gross efficiency	%
EX	Combined efficiency of auxiliary drive, coupling, and gears	%
HA	Enthalpy of wet air	Btu/lbm (J/kg)
HAAqLv	Enthalpy of wet air at gas temperature leaving AQC device	Btu/lbm (J/kg)
HAEn	Enthalpy of wet air entering, general	Btu/lbm (J/kg)
HALgEn	Enthalpy of infiltrating wet air entering	Btu/lbm (J/kg)
HALvCr	Enthalpy of wet air at average gas temperature leaving envelope	Btu/lbm (J/kg)
HATFgLv	Enthalpy of air at the gas outlet temperature	Btu/lbm (J/kg)
Hcaz	Convection heat transfer coefficient for location *z*	$Btu/ft_2 \cdot h \cdot F$ $(J/m_2 \cdot s \cdot C)$
Hcc	Enthalpy of calcium carbonate (limestone)	Btu/lbm (J/kg)
HCoal	Enthalpy of coal	Btu/lbm (J/kg)
HDA	Enthalpy of dry air	Btu/lbm (J/kg)
HDAEn	Enthalpy of dry air at the average entering air temperature	Btu/lbm (J/kg)
HDFg	Enthalpy of dry flue gas	Btu/lbm (J/kg)
HDFgLvCr	Enthalpy of dry flue gas leaving, excluding leakage	Btu/lbm (J/kg)
HEn	Enthalpy entering, general	Btu/lbm (J/kg)
HFc	Enthalpy of fixed carbon	Btu/lbm (J/kg)
HFEn	Enthalpy of the fuel at the temperature of fuel	Btu/lbm (J/kg)
HFg	Enthalpy of wet flue gas	Btu/lbm (J/kg)
HFgEn	Enthalpy of wet flue gas entering	Btu/lbm (J/kg)
HFgLv	Enthalpy of wet flue gas leaving	Btu/lbm (J/kg)
HFo	Enthalpy of fuel oil	Btu/lbm (J/kg)
HGF	Enthalpy of natural gas	Btu/lbm (J/kg)
HHVC	Higher heating value of carbon	Btu/lbm (J/kg)
HHVCO	Higher heating value of carbon monoxide	Btu/lbm (J/kg)
HHVCRs	Higher heating value of carbon in residue	Btu/lbm (J/kg)
HHVF	Higher heating value of fuel at constant pressure	Btu/lbm (J/kg)
HHVFcv	Higher heating value of fuel at constant volume	Btu/lbm (J/kg)
HHVGF	Higher heating value of gaseous fuel, volume basis	Btu/ft³ (J/m³)
HHVH2	Higher heating value of unburned hydrogen	Btu/lbm (J/kg)
HHVHc	Higher heating value of unburned hydrocarbons	Btu/lbm (J/kg)
HHVPr	Higher heating value of pulverizer rejects	Btu/lbm (J/kg)
Hk	Enthalpy of constituent *k*	Btu/lbm (J/kg)
Hkz	Enthalpy of constituent *k* at location *z*	Btu/lbm (J/kg)
HLv	Enthalpy leaving, general	Btu/lbm (J/kg)

Copyright ASME International
Provided by IHS under license with ASME
No reproduction or networking permitted without license from IHS
Not for Resale

TABLE 5.20.2-1
ACRONYMS

Acronyms	Description	Units
HMnA	Average enthalpy of wet air	Btu/lbm (J/kg)
HMnFg	Average enthalpy of wet gas	Btu/lbm (J/kg)
HMnFgLvCr	Average enthalpy of wet gas at *TMnLvCr*	Btu/lbm (J/kg)
HPr	Enthalpy of pulverizer rejects leaving pulverizer	Btu/lbm (J/kg)
Hraz	Radiation heat transfer coefficient for location *z*	Btu/ft_2 · h · F (J/m_2 · s · C)
HRe	Enthalpy at reference temperature	Btu/lbm (J/kg)
Hrk	Heat of reaction for constituent *k*	Btu/lbm (J/kg)
HrNO_x	Heat of formation of NO (or N_2O)	Btu/lb mole (J/kg)
HRs	Enthalpy of residue	Btu/lbm (J/kg)
HRsEn	Enthalpy of residue entering	Btu/lbm (J/kg)
HrSlf	Heat generated due to sulfation	Btu/lbm (J/kg)
HRsLv	Enthalpy of residue leaving	Btu/lbm (J/kg)
HSb	Enthalpy of sorbent	Btu/lbm (J/kg)
HSbEn	Enthalpy of sorbent entering steam generator envelope	Btu/lbm (J/kg)
HStEnz	Enthalpy of additional moisture (steam) entering flue gas	Btu/lbm (J/kg)
HStLvCr	Enthalpy of steam (based on ASME Steam Tables), at corrected exit gas temperature	Btu/lbm (J/kg)
HStz	Enthalpy of steam at location *z*	Btu/lbm (J/kg)
HStzd	Enthalpy of steam at location *z*, design conditions	Btu/lbm (J/kg)
Ht	Height, elevation difference between pressure measurements	ft (m)
HVk	Heat of reaction for calcination or hydration of constituent *k*	Btu/lbm (J/kg)
HVmi	Enthalpy of volatile matter, *i*, where *i* is 1 or 2	Btu/lbm (J/kg)
HW	Enthalpy of water (based on ASME Steam Tables)	Btu/lbm (J/kg)
HWRe	Enthalpy of water at reference temperature	Btu/lbm (J/kg)
HWv	Enthalpy of water vapor (JANAF/NASA reference)	Btu/lbm (J/kg)
HWvEn	Enthalpy of water vapor at average entering air temperature	Btu/lbm (J/kg)
Hwz	Heat transfer coefficient for insulation and lagging	Btu/ft_2 · h · F (J/m_2 · s · C)
HWzd	Enthalpy of water at location *z*, design conditions	Btu/lbm (J/kg)
MFrAsF	Mass fraction of ash in fuel	mass/mass fuel
MFrAz	Mass fraction of air at location *z* to total air	mass/mass
MFrClhk	Mass fraction of calcination or hydration constituent *k*	mass CO_2/ mass const
MFrCO2Sb	Mass of gas (CO_2) from sorbent per mass fuel	mass/mass fuel
MFrFc	Mass fraction of fixed carbon	mass/mass fuel
MFrFgz	Mass fraction of wet gas at location *z*	mass/mass fuel
MFrH_2O*Sb*	Mass fraction of the water in sorbent	mass/mass sorbent
MFrInSb	Mass of inerts in sorbent per mass fuel	mass/mass fuel
MFrRs	Total mass of residue per mass fuel	mass/mass fuel
MFrSb	Mass of sorbent per mass of fuel	mass/mass fuel
MFrSbk	Mass of reactive constituent *k* in sorbent	mass/mass sorbent
MFrSc	Sulfur capture ratio	lbm/lbm (kg/kg)
MFrSO_3	Mass fraction of SO_3 formed in the sulfation	mass/mass fuel
MFrSsb	Mass of spent sorbent per mass fuel	mass/mass fuel
MFrStCr	Ratio of design main steam flow divided by test main steam flow	lbm/lbm (kg/kg)
MFrThA	Theoretical air, ideal	mass/mass fuel
MFrThACr	Mass of theoretical air corrected per	mass/mass fuel
MFrVm	Mass fraction of volatile matter	mass/mass fuel
MFrVm1	Mass fraction of primary volatile matter	mass/mass fuel
MFrVm2	Mass fraction of secondary volatile matter	mass/mass fuel
MFrVmCr	Mass fraction of volatile matter, dry-ash free	mass/mass fuel

Copyright ASME International
Provided by IHS under license with ASME
No reproduction or networking permitted without license from IHS
Not for Resale

TABLE 5.20.2-1
ACRONYMS

Acronyms	Description	Units
MFrWAdz	Additional water at location *z* per mass fuel	mass/mass fuel
MFrWDA	Mass fraction of moisture in dry air, mass H_2O/mass dry air	lbm/lbm (kg/kg)
MFrWF	Mass fraction of water in fuel	mass/mass fuel
MFrWRs	Mass fraction of water in dry residue	mass/mass residue
MFrWSb	Water from sorbent per mass fuel	mass/mass fuel
MnCpA	Mean specific heat of wet air	Btu/lbm °F (J/kg K)
MnCpDFg	Mean specific heat of dry flue gas	Btu/lbm °F (J/kg K)
MnCpFg	Mean specific heat of wet flue gas	Btu/lbm °F (J/kg K)
MnCpk	Mean specific heat of constituent *k*	Btu/lbm °F (J/kg K)
MoCO$_2$Sb	Moles of dry gas (CO_2) from sorbent per mass fuel	moles/mass fuel
MoDFg	Moles dry gas per mass fuel	mass/mass fuel
MoDPc	Moles dry products from fuel (CO_2, N_2F, and actual SO_2 produced)	moles/mass fuel
MoDPcu	Moles dry products from fuel (CO_2, N_2F, and total conversion of SO_2 in fuel)	moles/mass fuel
MoFg	Moles wet gas per mass fuel	moles/mass fuel
MoFrCaS	Calcium to sulfur molar ratio	moles/mole
MoFrClhCc	Calcination fraction of calcium carbonate	moles CO_2/mole $CaCO_3$
MoFrClhk	Calcination fraction of constituent *k*	moles CO_2/mole const
Mokj	Moles of fuel constituent *k* in gaseous component *j*	moles/mass fuel
MoSO2	Maximum theoretical SO_2 per mass fuel	moles/mass fuel
MoThACr	Moles of theoretical air required (corrected)	moles/mass fuel
MoThAPcu	Theoretical air required for gasified fuel products	moles/mass fuel
MoWA	Moles of moisture in air	moles/mass air
MoWPc	*MoDPc* plus moles H_2O from fuel, sorbent and any additional moisture	moles/mass fuel
MoWPcu	*MoDPcu* plus moles H_2O from fuel, sorbent and any additional moisture	moles/mass fuel
MoWSb	Moles moisture in sorbent	moles/mass fuel
MpAhLg	Air heater leakage, percent of entering flue gas weight	% mass
MpAsF	Percent ash in fuel	% mass
MpCak	Percent of sorbent calcium in the form of constituent *k* (CO_3 or OH)	% mass
MpCb	Carbon burned	% mass
MpCbo	Percent carbon burnout	% mass
MpCF	Percent carbon in fuel	% mass
MpCO$_2$Rs	Percent carbon dioxide in residue	% mass
MpCO$_2$Rs	Percent carbon dioxide in residue	% mass
MpCRs	Percent free carbon in residue	% mass
MpFk	Percent fuel constituent *k*	% mass
MpH$_2$b	Percent hydrogen burned	% mass
MpH$_2$F	Percent hydrogen in fuel	% mass
MpH$_2$OF	Percent water in fuel	% mass
MpInSb	Percent of sorbent inert material	% mass
MpN$_2$F	Nitrogen in fuel	% mass
MpO2F	Oxygen in fuel	% mass
MpRsFgz	Solids in flue gas at location *z*, percent of wet gas	% mass
MpRsz	Mass of residue collected at location *z*	% mass
MpSbk	Percent of constituent *k* in sorbent	% mass
MpSF	Sulfur in fuel	% mass
MpToCRs	Total carbon content in residue sample, includes CO_2	% mass

Copyright ASME International
Provided by IHS under license with ASME
No reproduction or networking permitted without license from IHS
Not for Resale

TABLE 5.20.2-1
ACRONYMS

Acronyms	Description	Units
MpUbC	Percent unburned carbon	% mass
MpUbH$_2$	Percent unburned hydrogen	% mass
MpWFgz	Moisture in flue gas at location *z*, percent of wet flue gas	% mass
MqAl	Mass rate of wet infiltration air	lbm/Btu (kg/J)
MqAz	Mass wet air at location *z* on input from fuel basis	lbm/Btu (kg/J)
MqCO$_2$*Sb*	Mass of dry gas (CO_2) from sorbent, input from fuel basis	lbm/Btu (kg/J)
MqDAz	Mass dry air at location *z* on input from fuel basis	lbm/Btu (kg/J)
MqDFgz	Mass dry gas at location *z* on input from fuel basis	lbm/Btu (kg/J)
MqFgEn	Mass wet flue gas entering on input from fuel basis	lbm/Btu (Kg/J)
MqFgF	Wet gas from fuel	lbm/Btu (kg/J)
MqFgz	Mass of wet gas at location *z*, input from fuel basis	lbm/Btu (kg/J)
Mqk	Mass of constituent *k* on input from fuel basis	lbm/Btu (kg/J)
MqNOx	Mass of NO_x in flue gas expressed on input from fuel basis	lbm/Btu (kg/J)
MqPr	Mass of pulverizer rejects on input from fuel basis	lbm/Btu (kg/J)
MqRsz	Mass of residue collected at location *z*	lbm/Btu (kg/J)
MqSb	Mass of sorbent on input from fuel basis	lbm/Btu (kg/J)
MqSbk	Mass of sorbent constituent *k*, input from fuel basis	lbm/Btu (kg/J)
MqThA	Theoretical air, ideal, on input from fuel basis	lbm/Btu (kg/J)
MqThACr	Theoretical air corrected on input from fuel basis	lbm/Btu (kg/J)
MqThAf	Typical value of theoretical air for fuel *f* (ideal)	lbm/Btu (kg/J)
MqWA	Water from moisture in air	lbm/Btu (kg/J)
MqWAdz	Additional water at location *z*, input from fuel basis	lbm/Btu (kg/J)
MqWF	Water from H_2O in fuel	lbm/Btu (kg/J)
MqWFgz	Total moisture in flue gas at location *z*	lbm/Btu (kg/J)
MqWH$_2$*F*	Water from combustion of hydrogen in fuel	lbm/Btu (kg/J)
MqWSb	Water from sorbent on input from fuel basis	lbm/Btu (kg/J)
MqWvF	Water from H_2O vapor in fuel	lbm/Btu (kg/J)
MrAFg	Mass flow rate of air or flue gas, general	lbm/h (kg/s)
MrAFgCr	Mass flow rate of air or flue gas, corrected for fuel and efficiency	lbm/h (kg/s)
MrAz	Mass flow rate of wet air at location *z*	lbm/h (kg/s)
MrCwz	Mass flow rate of cooling water at location *z*	lbm/h (kg/s)
MrDA	Mass flow rate of dry air	lbm/h (kg/s)
MrF	Mass flow rate of fuel	lbm/h (kg/s)
MrFgz	Mass flow rate of wet gas at location *z*	lbm/h (kg/s)
MrPr	Mass flow rate of pulverizer rejects	lbm/h (kg/s)
MrRsW	Mass flow rate of residue/water mixture	lbm/h (kg/s)
MrRsz	Mass flow rate of residue at location *z*	lbm/h (kg/s)
MrRyFg	Mass flow rate of recycled flue gas	lbm/h (kg/s)
MrRyRs	Mass flow rate of recycled residue	lbm/h (kg/s)
MrSb	Mass flow rate of sorbent	lbm/h (kg/s)
MrStd	Mass flow rate of steam, design value	lbm/h (kg/s)
MrStEnz	Mass flow rate of additional moisture (steam) entering flue gas	lbm/h (kg/s)
MrStX	Mass flow rate of auxiliary equipment steam	lbm/h (kg/s)
MrStz	Mass flow rate of steam at location *z*	lbm/h (kg/s)
MrStzd	Mass flow rate of steam at location *z*, design value	lbm/h (kg/s)
MrWSb	Mass flow rate water in sorbent	lbm/h (kg/s)
MrWz	Mass flow rate water at location *z*	lbm/h (kg/s)
MrWzCr	Mass flow rate of feedwater corrected	lbm/h (kg/s)
MvFk	Mass fuel constituent *k* per mole gaseous fuel	mass/mole
MvRs	Mass per unit volume, used in dust loading	grains/ft^3 (g/m^3)
MwA	Molecular weight of wet air	mass/mole
MwCak	Molecular weight of sorbent calcium compound *k*	mass/mole
MwCc	Molecular weight of calcium carbonate	mass/mole
MwCo	Molecular weight of carbon monoxide, CO	mass/mole
MwCO$_2$	Molecular weight of carbon dioxide, CO_2	mass/mole

Copyright ASME International
Provided by IHS under license with ASME
No reproduction or networking permitted without license from IHS Not for Resale

TABLE 5.20.2-1
ACRONYMS

Acronyms	Description	Units
MwDFg	Molecular weight of dry flue gas	mass/mole
MwFg	Molecular weight of wet flue gas	mass/mole
MwGF	Molecular weight of gaseous fuel	mass/mole
MwHc	Molecular weight of hydrocarbons	mass/mole
Mwk	Molecular weight of constituent *k*	mass/mole
$MwNO_x$	Molecular weight of NO	mass/mole
MwS	Molecular weight of sulfur	mass/mole
Pa	Barometric pressure	psia (Pa)
PAz	Static pressure of air at point *z*	in. wg (Pa)
PDiAFg	Pressure differential, air (air resistance) or flue gas (draft loss)	in. wg (Pa)
PDiAFgCr	Pressure differential, air or flue gas corrected to contract	in. wg (Pa)
PFgk	Static pressure of flue gas at point *k*	in. wg (Pa)
PpWvA	Partial pressure of water vapor in air	psia (Pa)
PsWTdb	Saturation pressure of water vapor at dry-bulb temperature	psia (Pa)
PsWTwb	Saturation pressure of water vapor at wet-bulb temperature	psia (Pa)
PsWvTz	Saturation pressure of water vapor at temperature *T*	psia (Pa)
Qb	Energy balance closure	Btu/h (W)
QEn	Energy entering the system	Btu/h (W)
QLv	Energy leaving the system	Btu/h (W)
QpB	Credits calculated on a % input from fuel basis, general	% fuel input
QpBDA	Credit due to energy in entering dry air	% fuel input
QpBF	Credit due to sensible heat in fuel	% fuel input
QpBk	Credit due to constituent *k*	% fuel input
QpBSlf	Credit due to sulfation	% fuel input
QpBWA	Credit due to moisture in entering air	% fuel input
QpL	Losses calculated on a % input from fuel basis, general	% fuel input
QpLALg	Loss due to air infiltration	% fuel input
QpLAq	Loss from hot air quality control equipment	% fuel input
QpLCO	Loss due to carbon monoxide (CO) in flue gas	% fuel input
QpLDFg	Loss due to dry gas	% fuel input
$QpLH_2F$	Loss due to water formed from combustion of H_2 in fuel	% fuel input
$QpLH_2Rs$	Loss due to unburned hydrogen in residue	% fuel input
QpLk	Loss due to constituent *k*	% fuel input
QpLNOx	Loss due to the formation of NO_x	% fuel input
QpLPr	Loss due to pulverizer rejects	% fuel input
QpLRs	Loss due to sensible heat of residue	% fuel input
QpLSmUb	Summation of losses due to unburned combustibles	% fuel input
QpLUbC	Loss due to unburned carbon in residue	% fuel input
QpLUbHc	Loss due to unburned hydrocarbons in flue gas	% fuel input
QpLWA	Loss due to moisture in air	% fuel input
QpLWF	Loss due to water in fuel	% fuel input
QpLWvF	Loss due to water vapor in gaseous fuel	% fuel input
QrAp	Equivalent heat flux through furnace hopper	Btu/h (W)
QrApEv	Loss due to evaporation of ash pit water	Btu/h (W)
QrApW	Energy increase in ash pit water	Btu/h (W)
QrAxSt	Energy in auxiliary steam	Btu/h (W)
QrB	Credits calculated on an energy basis, general	Btu/h (W)
QrBd	Energy increase in output for blowdown water	Btu/h (W)
QrBk	Credit due to constituent *k*	Btu/h (W)
QrBSb	Credit due to sensible heat in sorbent	Btu/h (W)
QrBWAd	Credit due to energy supplied by additional moisture	Btu/h (W)
QrBX	Credit due to auxiliary equipment power	Btu/h (W)
QrF	Potential energy of combustion available from fuel	Btu/h (W)
QRh	Reheat absorption	Btu/h (W)
QrI	Energy input (*QrF* for input from fuel)	Btu/h (W)
QrIGr	Energy input gross, energy input from fuel plus credits	Btu/h (W)

Copyright ASME International
Provided by IHS under license with ASME
No reproduction or networking permitted without license from IHS
Not for Resale

TABLE 5.20.2-1
ACRONYMS

Acronyms	Description	Units
QrL	Losses calculated on an energy basis, general	Btu/h (W)
QrLAc	Loss due to air preheater coil supplied from the steam generator	Btu/h (W)
QrLAp	Total wet ash pit losses when tested	Btu/h (W)
QrLClh	Loss due to calcination and dehydration of sorbent	Btu/h (W)
QrLCw	Loss from cooling water	Btu/h (W)
QrLk	Loss due to constituent *k*	Btu/h (W)
QrLRy	Loss from recycled streams	Btu/h (W)
QrLRyFg	Loss from recycled flue gas	Btu/h (W)
QrLRyRs	Loss from recycled residue	Btu/h (W)
QrLSrc	Loss due to surface radiation and convection	Btu/h (W)
QrLWAd	Loss due to additional moisture	Btu/h (W)
QrLWSb	Loss due to water in sorbent	Btu/h (W)
QrO	Total heat output	Btu/h (W)
QrRhCr	Corrected reheat absorption for contract conditions	Btu/h (W)
QrRsWLv	Sensible heat in residue/water leaving the ash pit	Btu/ft^2 · (W/m^2)
QrShCr	Superheater absorption corrected for design conditions	Btu/h (W)
QSh	Superheat absorption	Btu/h (W)
QX	Energy input to auxiliary equipment drives	kWh (J)
R	Universal molar gas constant	ft lbf/mole · R
Rhmz	Relative humidity at location *z*	mass/mass
Rk	Specific gas constant for gas *k*	ft/R (J kg/K)
RqQrRhd	Required reheater absorption, design	Btu/h (W)
RqQrShd	Required superheater absorption, design	Btu/h (W)
Se	Stack effect	in. wg (Pa)
Sg	Specific gravity	mass/mass
SmQpB	Total credits calculated on a % input from fuel basis	% fuel input
SmQpL	Total losses calculated on a % input from fuel basis	% fuel input
SmQrB	Total heat credits calculated on an energy basis	Btu/h (W)
SmQrL	Total losses calculated on an energy basis	Btu/h (W)
TAEn	Entering air temperature	°F (°C)
TAEnd	Design entering air temperature	°F (°C)
TAfz	Average surface temperature of area *z*	°F (°C)
TAz	Temperature of wet air at location *z*	°F (°C)
Tc	Temperature on *X*-axis of enthalpy figures	°F (°C)
TDAz	Temperature of dry air at location *z*	°F (°C)
Tdb	Dry-bulb temperature	°F (°C)
TDi	Temperature difference	°F (°C)
TDiFgEn	Air heater temperature correction for entering gas temperature	°F (°C)
TDiMrFgEn	Air heater temperature correction for entering gas mass flow	°F (°C)
TDiTAEn	Air heater temperature correction for entering air temperature	°F (°C)
TDiXr	Air heater temperature correction for off design *X*-ratio	°F (°C)
TFg	Temperature of flue gas	°F (°C)
TFgEn	Temperature of flue gas entering component	°F (°C)
TFgEnCrd	Gas temperature entering air heater corrected to design conditions	°F (°C)
TFgLv	Temperature of flue gas leaving	°F (°C)
TFgLvCr	Corrected gas outlet temperature (excluding leakage)	°F (°C)
TFgLvCrd	Exit gas temperature corrected to design conditions	°F (°C)
Thfz	Hot face (wall) temperature at location *z*	°F (°C)
TK	Temperature in *K*	°F (°C)
Tkz	Temperature of constituent *k* at location *z*	°F (°C)
TLvk	Temperature of constituent *k* leaving the steam	°F (°C)
TMnAEn	Average entering air temperature	°F (°C)

Copyright ASME International
Provided by IHS under license with ASME
No reproduction or networking permitted without license from IHS
Not for Resale

TABLE 5.20.2-1
ACRONYMS

Acronyms	Description	Units
TMnAfCrz	Average surface temperature corrected to design at location *z*	°F (°C)
TMnAfz	Average surface temperature at location *z*	°F (°C)
TMnARe	Reference surrounding air temperature	°F (°C)
TMnAz	Average surrounding air temperature	°F (°C)
TMnFgLvCr	Average corrected gas outlet temperature	°F (°C)
TRe	Reference temperature	°F (°C)
TStz	Temperature of steam at location *z*	°F (°C)
Twb	Wet-bulb temperature	°F (°C)
VAz	Average velocity of air	ft/sec (m/s)
VpCO$_2$	Percent of CO_2 in flue gas, wet basis	% volume
VpCOz	Percent CO in flue gas at location *z*, wet basis	% volume
VpGj	Gaseous fuel component *j*	Btu/ft^2 (J/m^2)
VpH2O	Percent water in flue gas, wet basis	% volume
VpHc	Percent hydrocarbons in flue gas, wet basis	% volume
VpN2a	Percent N_2 (atmospheric) in flue gas, wet basis	% volume
VpN2f	Percent N_2 from fuel in flue gas, wet basis	% volume
VpNOx	Percent NO_x in flue gas, wet basis	% volume
VpO2	Percent of O_2 in flue gas, wet basis	% volume
VpSO2	Percent of SO_2 in flue gas, wet basis	% volume
XpAz	Percent excess air at location *z*	% mass

Copyright ASME International
Provided by IHS under license with ASME
No reproduction or networking permitted without license from IHS
Not for Resale

TABLE 5.20.2-2
MEASUREMENT AND UNCERTAINTY ACRONYMS

Acronyms	Description
ASENSCO	Absolute sensitivity coefficient
BIAS	Bias error
BIASR	Overall bias error
CHGPAR	Incremental change in value of measured parameter
DEGREE	Number of degrees of freedom
DEGFREER	Overall degrees of freedom for test
F	Weighting factor
i	Measured parameter
m	Number of sets of data or grid points
n	Number of times parameter is measured
PCHGPAR	Percent change in value of measured parameter
PI	Precision index
PIR	Overall precision index
PSTDDEV	Population standard deviation
Pv	Velocity pressure measurement
RECALEF	Recalculated fuel efficiency
RSENSCO	Relative sensitivity coefficient
SDI	Spatial distribution index
STDDEV	Standard deviation of the sample
STDDEVMN	Standard deviation of the mean
STDVAL	Two-tailed Student's *t*-value
U	Integrated average value of measured parameter
$U_{p,q}$	Arithmetic (or velocity weighted if applicable) average value of each row, *p*, and column, *q*, measurement point
UNC	Total uncertainty
UPC	Precision component of uncertainty
XAVE	Arithmetic average value
X_i	Value of a measured parameter at time *i*
Z	Summation, integrated average value of *z*
z	Time averaged value of the measured parameter
ϕ	Pitch angle
ψ	Yaw angle

Copyright ASME International
Provided by IHS under license with ASME
No reproduction or networking permitted without license from IHS Not for Resale

SECTION 6 — REPORT OF TEST RESULTS

6.1 INTRODUCTION

The performance test report documents the data, calculations, and processes employed in conducting the performance test. The report presents specific information to demonstrate that all objectives of the test have been met and to describe the test procedures and pertinent results. This Section presents guidance on both content and format of information typically included in this report

6.2 REPORT CONTENTS

Although the materials prepared for the performance test reports may vary somewhat, the contents will typically be organized and include the information as described below:

- Title Page. The title page contains the title of the test, the name of the plant on which the test is being conducted and its location, the unit designation, the names of those who conducted the test and approved it, and the date the report was prepared.
- Table of Contents. The table of contents lists major subdivisions of the reports to the third level, as well as titles of tables, figures, and appendices.
- General Information. This portion of the report gives the reader information needed to understand the basis of the test and must include the following:
  - — title of test
  - — owner
  - — steam generator manufacturer
  - — steam generator size
  - — date of first commercial operation
  - — elevation of steam generator above mean sea level
  - — manufacturer's predicted performance data sheets
  - — guaranteed performance data
  - — name of chief-of-test
  - — test personnel, their affiliations and test responsibilities
  - — dates of the test
- Summary. This Section briefly describes the objectives, results, and conclusions of the test.
- Introduction. The introduction states the purpose of the test and relevant background information such as age, unusual operating characteristics, problems, etc., on the unit to be tested.
- Objectives and Agreements. This section addresses the objectives of the test, required test uncertainty, guarantees, operating conditions, and any other stipulations.
- Test Descriptions and Procedures. This section includes the following:
  - — a schematic of the steam generator system boundary showing the locations of all measured parameters
  - — a list of the equipment and auxiliaries being tested, including nameplate data
  - — a list and description of the test instruments identified in the system diagram
  - — a summary of key observations
  - — the magnitude of primary uncertainties in measurement and sampling, and the methods of calculation and correction factors. Sample calculations are also presented.
- Results. Test results are presented on the basis of operating conditions and as corrected to specified conditions. Test uncertainty is also stated in the results.
- Uncertainty Analysis. This section provides sufficient detail to document the target uncertainty and demonstrate that the test has met this target.
- Conclusions and Recommendations. This section includes conclusions directly relevant to the test objectives as well as other conclusions or recommendations drawn from the test.
- Appendices. Test logs, test charts, data sheets, instrument calibration sheets and corrections curves, records of major fluctuations and observations, laboratory analyses, computations, computer printouts, and uncertainty analyses are among the kinds of materials which are included in the appendices.

Previous Page is Blank

Copyright ASME International
Provided by IHS under license with ASME
No reproduction or networking permitted without license from IHS
Not for Resale

STD·ASME PTC 4-ENGL 1998 ■ 0759670 0615083 9T7 ■

SECTION 7 — UNCERTAINTY ANALYSIS

7.1 INTRODUCTION

Uncertainty analysis is a procedure by which the accuracy of test results can be quantified. Because it is required that the parties to the test agree to the quality of the test (measured by test uncertainty), pretest and post-test uncertainty analyses are an indispensable part of a meaningful performance test.

PTC 19.1, Measurement Uncertainty, is the primary reference for uncertainty calculations and any uncertainty analysis method that conforms to PTC 19.1 is acceptable. This Section provides specific methods which are tailored for use in conducting uncertainty analysis specific to this Code. This Section addresses the following:

- determining precision uncertainties
- estimating bias uncertainties
- propagating the precision and bias uncertainties
- obtaining the test uncertainty

Additional information on uncertainty is available in PTC 19.1, Measurement Uncertainty.

7.1.1 General List of Symbols for Section 7. The following symbols are generally used throughout Section 7. Some symbols are used only in a specific paragraph and are defined or redefined locally:

A	(cross-sectional) area
a_0, a_1	polynomial coefficients
B	bias limit
C	a constant
F	statistical parameter
$f()$	(mathematical) function
N	number of measurements or number of points
n	number of data points used in calculating standard deviation
m	number of grid points or number of different measurement locations
O_2	oxygen concentration
PI	precision index
R	a result (such as efficiency, output)
r	number of readings or observations
S	precision index, standard deviation of the mean
s	sample standard deviation (s^2 is the sample variance)
SDI	spatial distribution index
T	temperature
t	Student's t-statistic
U	uncertainty
u	any parameter
V	velocity
v	any parameter
w	any parameter
x	any parameter
y	any parameter
z	any parameter
$\delta()$	small change of ()
${}_R\Theta_x$	sensitivity coefficient for parameter x on result R (${}_R\Theta_x = \partial R/\partial x$)
υ	degrees of freedom
σ	population standard deviation (σ^2 is the population variance)
$\sum_a^b ()_i$	sum of $()_i$ from $i = a$ to $i = b$
τ	time

7.1.1.1 Subscripts

B	bias
I	instrument, instrumentation
i	index of summation, a specific point
j	index of summation, a specific point
k	index of summation, a specific point
n	pertaining to numerical integration
P	precision
R	pertaining to result R
r	real
x	pertaining to parameter x
w	weighted (average)

7.1.1.2 Superscript

$-$	average

7.2 FUNDAMENTAL CONCEPTS

7.2.1 Benefits of Uncertainty Analysis. The benefits of performing an uncertainty analysis are based on the following facts about uncertainty:

- Uncertainty analysis is the best procedure to estimate the error limit in a set of measurements or test results.

Previous Page is Blank

Copyright ASME International
Provided by IHS under license with ASME
No reproduction or networking permitted without license from IHS
Not for Resale

- There is a high probability (usually 95%) that a band defined by the measured value plus or minus the uncertainty includes the true value.
- The uncertainty of a test result is a measure of the quality of the test.
- Uncertainty analysis performed after a test is run allows the test engineer to determine those parameters and measurements that were the greatest contributors to testing error.
- Uncertainty analysis performed while a test is being planned (using nominal or estimated values for primary measurement uncertainties) identifies potential measurement problems and permits designing a cost-effective test.
- A performance test code based on a specified uncertainty level is much easier to adapt to new measurement technology than a code tied to certain types of instruments [1].

This Code allows the parties to a steam generator test to choose among many options for test instruments and procedures and even to choose between two different methods (energy balance or input/output) for evaluating steam generator efficiency. Uncertainty analysis helps the parties to the test make these choices.

7.2.2 Uncertainty Analysis Principles. This Section reviews fundamental concepts of uncertainty analysis.

It is an accepted principle that all measurements have errors. Any results calculated from measured data, such as the efficiency of a steam generator, also contain errors, resulting not only from the errors in the data but also from approximations or errors in the calculation procedure. The methods of uncertainty analysis require the engineer to first determine the error/uncertainty of the basic measurements and data reduction procedures and then to propagate those uncertainties into the uncertainty of the result.

Note the following definitions:

- *Error* is the difference between the true value of a parameter and the measured or calculated value of the parameter. Error is unknown because the true value is unknown. Obviously, if the error were known, the test results could be based on the true value, not the measured or calculated value.
- *Uncertainty* is the estimated error limit of a measurement or result.[1]
- *Coverage* is the percentage of observations (measurements) that can be expected to differ from the true value by no more than the uncertainty. Stated another way, a typical value, say 95% coverage, means that the true value will be bounded by the measured value plus or minus the uncertainty for 95% of the measurements. The concept of coverage is necessary in uncertainty analysis since the uncertainty is only an estimated error limit.

The calculated average value of a parameter plus or minus the uncertainty thus defines a band in which the true value of the parameter is expected to lie, with a certain coverage.

Error and uncertainty are similar in many respects. There are many types and sources of error, but when a number is assigned to error, it becomes an uncertainty. Accuracy is used interchangeably with uncertainty; however, the two are not synonymous since high accuracy implies low uncertainty.

Measurements contain two types of error, which are illustrated on Fig. 7.2-1. The total error of any specific measurement is the sum of a fixed bias error and a random precision error. Other names for bias and precision error are systematic error and random error, respectively. The characteristics of these two types of error are quite different.

Precision is manifested by the fact that repeated measurements of the same quantity by the same measuring system operated by the same personnel do not yield identical values. Precision is a random quantity and is expected to be described by a normal (Gaussian) probability distribution.

Bias is a characteristic of the measurement system. Bias is not random; it is an essentially fixed (although unknown) quantity in any experiment or test[2] that uses a specific instrument system and data reduction and calculation procedures.

When the magnitude and sign of a bias is known, it must be handled as a correction to the measured value with the corrected value used to calculate test result. Bias estimates considered in uncertainty analysis attempt to cover those biases whose magnitudes are unknown. Examples of biases that are intended to be included in uncertainty analysis are drift in calibration of a flue gas analyzer, the bias resulting from using an uncalibrated flow meter, the bias arising from the deteriorated condition of a previously calibrated flow meter, errors resulting from calculation procedure approximations, and the potential errors made in estimating values for unmeasured parameters.

It is not always easy to classify a specific uncertainty as bias or precision. Usually precision uncertainties

[1] Note that measurement uncertainty is *not* a tolerance on equipment performance.

[2] Note that bias may change slowly over the course of a test, such as calibration drift of an instrument.

Copyright ASME International
Provided by IHS under license with ASME
No reproduction or networking permitted without license from IHS
Not for Resale

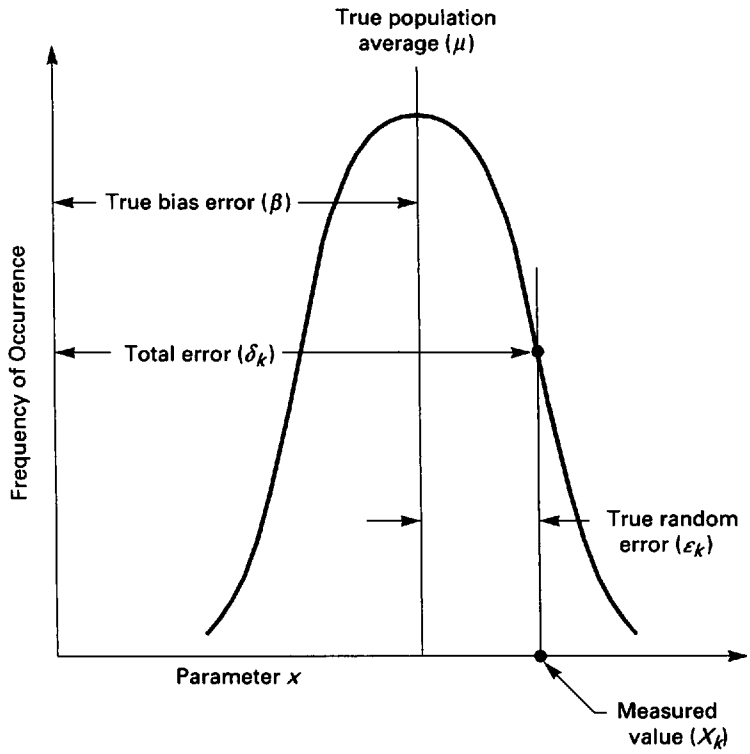

FIG. 7.2-1 TYPES OF ERRORS IN MEASUREMENTS

are associated with variability in time, whereas bias uncertainties are considered fixed in time as shown on Fig. 7.2-2. Variability in space (such as temperature stratification or non-uniform gas velocity in a flue gas duct) has been treated as precision [2] or bias [3] in different works. This Code treats spatial variability as a potential source of bias.

A complete uncertainty analysis requires determining values for both precision and bias in the basic measurements, their propagation into the calculated results, and their combination into the overall uncertainty of the results. Uncertainty analysis can be performed before a test is run (pretest analysis) and/or after a test is run (post-test analysis).

7.2.3 Averaging and Models for Variability. Instruments used in performance testing measure parameters such as temperature and concentration of certain constituents in a gas stream. Most instruments are capable of sensing the value of a parameter only at a single point or within a limited region of space and at discrete instants or over limited "windows" of time. It is well known that parameters such as gas temperature and composition vary in space (stratification) and time (unsteadiness). It should be realized that this variation is primarily due to physical processes rather than experimental error. For example, the laws of physics dictate that the velocity of a flowing fluid must be zero at the walls of a duct while the velocity nearer the center of the duct is usually not zero.

In a performance test, engineers sample several points in space and time and then use *averages* of the data to calculate test results. The averages are the best available estimates, and the differences between the average value of a parameter and its instantaneous and/or local values are used to estimate the error in the measurements and in any results calculated from them. The method of calculating the average and the method of calculating the uncertainty in the average depend on the model selected for the variability of the parameter. The choice is between a "constant value" model, in which the parameter is assumed to be constant in time and/or space, and a "continuous variable" model, in which it is assumed that the parameter has some continuous variation in time and/or space (refer to Subsection 5.2.3.1).

Consider the velocity of gas in a duct. The proper model for the variation over time of gas velocity at a

Copyright ASME International
Provided by IHS under license with ASME
No reproduction or networking permitted without license from IHS
Not for Resale

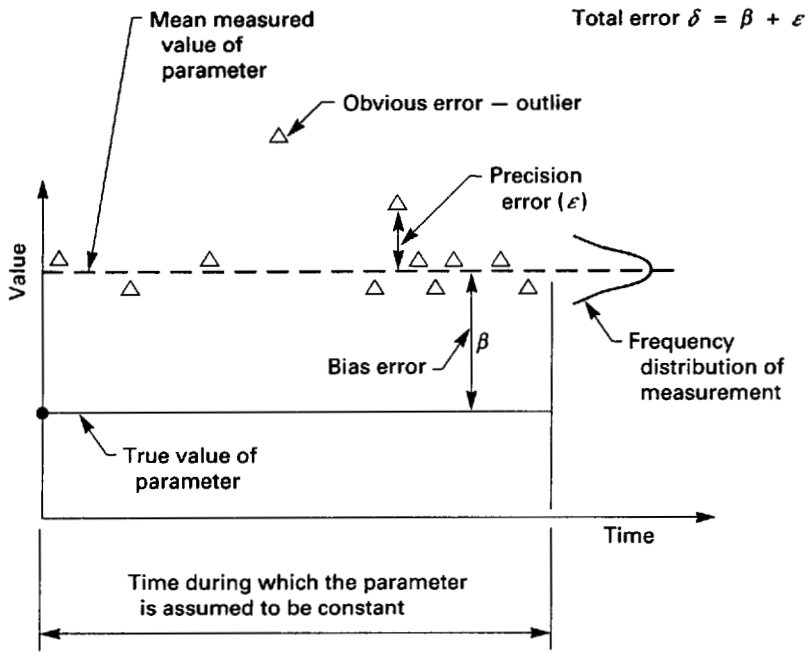

FIG. 7.2-2 TIME DEPENDENCE OF ERRORS

fixed point in the center of the duct may be a constant value; however, it is improper to adopt a constant value model for the variability of gas velocity over the duct cross section because the laws of physics dictate that it must be otherwise. Figure 7.2-3 illustrates these concepts. All of the variability in the actual data for a constant value model parameter is taken as error; however, only the scatter about the continuous variation should be considered error for a continuous-variable model.

The proper average value for a constant value model is the familiar arithmetic average

$$\bar{x} = \frac{1}{N}\sum_{i=1}^{N} x_i \qquad (7.2\text{-}1)$$

and the population standard deviation of the mean or its estimate, the sample standard deviation of the mean

$$S = \left[\frac{1}{N-1}\sum_{1}^{N}(x_i - \bar{x}^2)\right]^{1/2} \Big/ N^{1/2} \qquad (7.2\text{-}2)$$

is the proper index of the precision error.

The proper average for a continuous-variable model parameter is an integrated average. For time variation, the proper average is

$$\bar{y} = \frac{1}{\tau}\int_0^{\tau} y\, dt$$

and for area variation it is

$$\bar{y} = \frac{1}{A}\int_0^{A} y\, dA$$

Because data are obtained only at discrete points in space and/or instants of time, numerical integration schemes are typically used to approximate the integrated average. If the data are sampled at the midpoints of equal time or area increments, the integrated average may be calculated with Eq. (7.2-1); however, the precision index is not calculated by Eq. (7.2-2) because a constant value model is inappropriate. It must also be emphasized that alternative, more accurate, numerical integration schemes can be developed that do not use Eq. (7.2-1) to calculate the average.

The experimental error in an integrated average is due to two sources: error in the point values of the data, and error due to the numerical integration. The first type is the "ordinary" experimental error due to process variations, instrument errors, etc. The second type results from the imperfect representation of the continuous variable by a set of discrete points and the

Copyright ASME International
Provided by IHS under license with ASME
No reproduction or networking permitted without license from IHS
Not for Resale

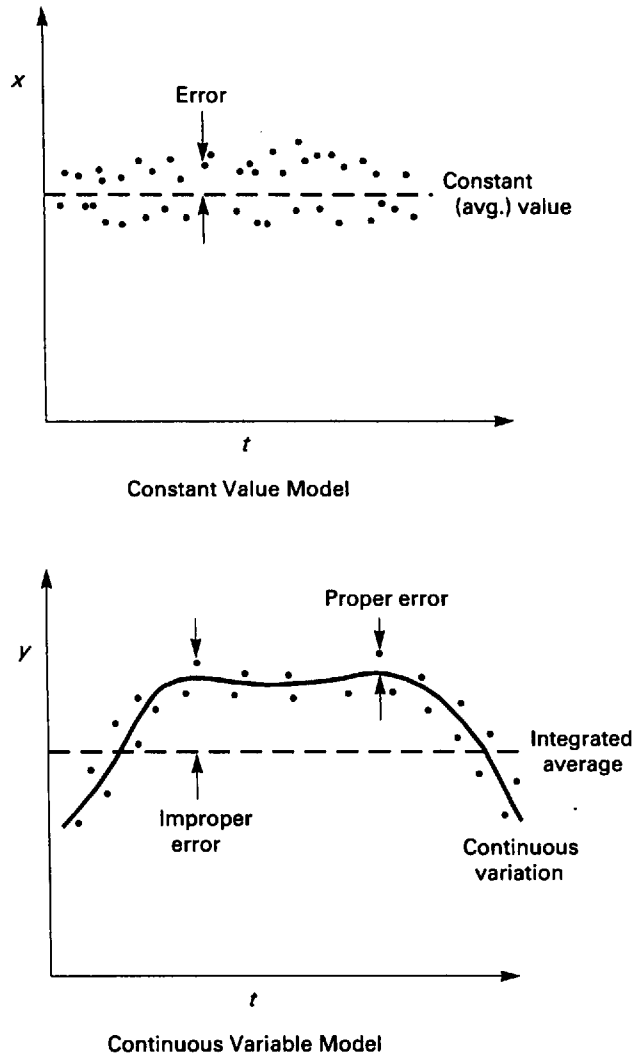

FIG. 7.2-3 CONSTANT VALUE AND CONTINUOUS VARIABLE MODELS

approximations in the integration scheme. The first error is precision. Special equations must be used to propagate the point precision error into the error of the integrated average. In this Code, the second (numerical integration) error is taken as bias.

7.2.4 Overview of Procedures for Determining Precision and Bias and Their Propagation. The working equations and procedures for calculating uncertainties for steam generator test results are given in Sections 7.4 through 7.6. This section gives an overview of the procedures and emphasizes certain critical concepts. An especially critical concept, the distinction between constant value and continuous variable parameters, was discussed in Subsection 7.2.3.

Precision errors are the result of random variations during the test. Precision errors can be estimated by taking numerous readings and applying the methods of statistics to the results. The following discussion of these methods is based on the assumption that the reader has an understanding of elementary statistics. Statistical concepts for performance test code work are discussed in PTC 19.1 and Benedict and Wyler [4]. Not all methods advocated in these references have been adopted in this Code.

Analysis of precision errors is based on the assumption that they follow a Gaussian (normal) probability distribution. One important result of this assumption is the root-sum-square method for combining errors due to individual sources.

Two important concepts concerning precision error are *independence* and *degrees of freedom.*

Parameters are independent if a change in one does not imply a change in another. If this is not true, the parameters are dependent. As an example, the dry gas loss depends on both the gas temperature and the oxygen content of the gas. Any error in temperature is unconnected with oxygen content; the two are independent. On the other hand, the results of a fuel analysis are given as percentages of various constituents. Since all of the percentages must add to 100, the constituent percentages are dependent. Physically, if the percentage of one component, (e.g., carbon), is lower than the percentage of another component (e.g., ash), the percentage of another component(s) must be higher.

Measurement errors can also be independent or dependent. The independence or dependence of errors can be different from the independence or dependence of the measured parameters. If all constituents of a fuel sample are determined independently from different procedures applied to different subsamples, then the errors are independent, even though the constituents themselves are dependent. If, however, one constituent is determined by difference rather than by direct analysis, then the error of that constituent is obviously dependent on the errors of the remaining constituents.

Special care must be taken in dealing with dependent parameters or dependent errors. When parameters are dependent, this dependence must be accounted for in the sensitivity coefficients. When errors are dependent, the cross-correlation between them must be considered.

Problems with parameter and error dependence can be minimized by reducing measurements and result calculations to sets involving only independent parameters and measurements. For example, the closure relationship between fuel constituent percentages should

Copyright ASME International
Provided by IHS under license with ASME
No reproduction or networking permitted without license from IHS
Not for Resale

be used to eliminate one measurement and its error. This Code generally follows this approach; therefore it is usually not necessary to include consideration of dependent parameters and dependent errors.

The degrees of freedom of a set of data is a measure of the amount of independent information in the data. A set of 10 temperature readings begins with 10 degrees of freedom. The number of degrees of freedom of a particular statistic calculated from the data is reduced by the number of other statistics used to calculate the particular statistic. The mean temperature calculated from 10 readings has 10 degrees of freedom. To calculate the sample standard deviation of the temperature,

$$S = \left[\frac{1}{N-1}\sum_{i=1}^{N}(T-\overline{T})^2\right]^{1/2} \qquad (7.2\text{-}3)$$

requires use of the calculated mean, $\overline{T}$, so the standard deviation has only 9 degrees of freedom. (This is why the division is $N - 1$ rather than N.)

A somewhat cumbersome formula is needed to determine the resulting degrees of freedom when a result depends on several parameters, each with a different number of degrees of freedom. Fortunately, if all parameters have a large number of degrees of freedom, the effects of degrees of freedom disappear from the calculations. (A "large sample" has more than about 25 degrees of freedom.) It is important to note that if a few parameters have small degrees of freedom, these can dominate the degrees of freedom of the result.

The precision uncertainty of a result is the product of the *precision index* of the result and the appropriate *Student's t-statistic*. The Student's t-statistic is based on the degrees of freedom of the precision index of the result and the probability level selected (95% in this Code). The precision index of a single set of data is the standard deviation of the mean of the single set of data. The precision index of a result is obtained by combining the values of the precision indexes of all the parameters that affect the result according to the equations given in Section 7.4.

Bias is "frozen" in the measurement system and/or the data reduction and result calculation process and cannot be revealed by analysis of the data. For a given set of measurements using a given measurement system, the bias is fixed and is not a random variable. Bias errors are those fixed errors that remain even after instrument calibration (bias error can be no smaller than the precision error of the calibration experiment). It is sometimes possible to conduct experimental tests for bias. Most often, however, it is necessary to estimate values for bias. The problem of estimating uncertainty was discussed by Kline and McClintock [5]. Note that, although the actual biases are not random variables, *estimates* of bias are random variables.

Bias estimates must be based on experience and good judgment. PTC 19.1 provides a few general guidelines for estimating bias. Obviously, the person in the best position to estimate bias is the person who conducted the test. The recommended practice in estimating bias is to estimate the value that is expected to provide 95% coverage. This estimated value is called the *bias limit*.

There are also times when it is necessary to estimate precision indexes. Obviously, a pretest uncertainty analysis must use estimated values of the precision indexes, since the test data from which to calculate them do not yet exist. In some cases, it is not feasible to obtain multiple observations of the data during a test. If only one observation of each measurement is available, the precision uncertainty of the data must also be estimated.

It is sometimes necessary to use "data" in a performance test that are based on estimates rather than on measurements. Likewise, it is sometimes more cost-effective to assign reasonable values to certain parameters rather than measure them. Examples include the distribution fractions ("splits") of combustion residue between various hoppers or the amount of heat radiated to an ash pit. It is also necessary to assign uncertainties to such data. It is perhaps an academic question whether such assigned values of uncertainty are labeled as bias or precision. In this Code, uncertainties in estimated parameters are generally treated as bias.

After values for both precision and bias uncertainties have been determined, it is necessary to determine the uncertainty in any results calculated from the data. This process is called *propagation of uncertainties*. Because precision and bias uncertainties are different types of quantities, it is customary to propagate them separately and combine them as the final step in an uncertainty calculation. The calculation procedure is straightforward, if somewhat tedious. Assume that a result (R) is calculated by

$$R = f(x_1, x_2, \ldots, x_M)$$

where

x_1 through x_M = *independent* measured quantities

Each x has both precision and bias uncertainty. For either type of uncertainty, the basic propagation equation is

Copyright ASME International
Provided by IHS under license with ASME
No reproduction or networking permitted without license from IHS Not for Resale

$$e_R = \left[\left(\frac{\partial f}{\partial x_1} e_{x_1}\right)^2 + \left(\frac{\partial f}{\partial x_2} e_{x_2}\right)^2 + \ldots + \left(\frac{\partial f}{\partial x_m} e_{x_M}\right)^2\right]^{1/2} \quad (7.2\text{-}4)$$

where

e = the precision index (PI) for precision

or

e = the bias limit (B) for bias

M = the number of independent measured quantities

The root-sum-square addition of errors is theoretically correct for random quantities (precision uncertainty) and is assumed to be proper for bias as well [2,5].

The propagation equation can be written in the following dimensionless form:

$$\frac{e_R}{R} = \left[\sum_{i=1}^{M}\left[\left(\frac{x_i}{R}\frac{\partial f}{\partial x_i}\right)\left(\frac{e_{x_i}}{x_i}\right)\right]^2\right]^{1/2} \quad (7.2\text{-}5)$$

where e_{x_i} is the uncertainty (precision or bias) in x_i. The coefficients

$$\left(\frac{x_i}{R}\frac{\partial f}{\partial x_i}\right)$$

are called *relative sensitivity coefficients*.

Since the calculation procedure is often complicated, it is often impossible to analytically evaluate the required partial derivatives. These derivatives are usually estimated by a numerical perturbation technique

$$\frac{\partial f}{\partial x_i} \approx \frac{f(x_1, \ldots, x_i + \delta x_i, \ldots, x_M) - f(x_1, \ldots, x_i, \ldots, x_M)}{\delta x_i} \quad (7.2\text{-}6)$$

One at a time, each parameter (x_i) is changed by a small amount (δx_i, typically 0.1 to 1%) and the result is recalculated with the perturbed parameter replacing the nominal value. All other parameters are held constant for the recalculation. The difference between the result with the perturbed value and the nominal result, divided by the perturbation, estimates the partial derivative. Since this procedure requires recalculation of the result many times (one recalculation for each independent parameter), an automated calculation procedure is highly desirable.

The precision uncertainty is then

$$U_P = \pm\, (t_{\nu,0.025})\, PI_R \quad (7.2\text{-}7)$$

where ν is the degrees of freedom of the result, and the bias uncertainty is

$$U_B = U_R \quad (7.2\text{-}8)$$

The final step in uncertainty analysis combines the bias uncertainty (or bias limit) and precision uncertainty (Student's t-times precision index) into the total uncertainty. This Code adopts the root-sum-square combination, in order to obtain 95% coverage

$$U = (U_P^2 + U_B^2)^{1/2} \quad (7.2\text{-}9)$$

7.3 PRETEST UNCERTAINTY ANALYSIS AND TEST PLANNING

A pretest uncertainty analysis is an excellent aid in test planning. The parties to a test can use a pretest uncertainty analysis to assist in reaching many of the agreements required in Section 3. Decisions regarding number and types of instruments, number of readings, number of sampling points in a grid, and number of fuel and/or sorbent samples can be made based on their predicted influence on the uncertainty of the test results.

A careful pretest uncertainty analysis can help control the costs of testing by keeping the number of readings or samples at the minimum necessary to achieve the target uncertainty and by revealing when it is not necessary or cost-effective to make certain measurements. For example, it may be possible to achieve the agreed upon target test uncertainty by using a nine point flue gas sampling grid rather than a 16 point grid or by using historical data rather than multiple laboratory analyses for fuel and sorbent properties.

The methodology of a pretest uncertainty analysis is formally identical to that for a post-test analysis with one exception. Since the actual test data are not yet available, elementary precision indexes must be estimated rather than calculated from test statistics. This makes it possible to "decompose" the precision error into its various components (process variations, primary sensor, data acquisition, etc.). Precision estimates, like estimates of bias in both pretest and post-test analyses, should be the best estimates of experienced persons. Values obtained from similar tests are often a good starting point.

A complete pretest uncertainty analysis may require several repetitions of the calculations as basic instrument

Copyright ASME International
Provided by IHS under license with ASME
No reproduction or networking permitted without license from IHS
Not for Resale

uncertainties, numbers of readings, and numbers of samples are all varied in an effort to obtain the target uncertainty in the most cost-effective manner. Computer support is essential to do this effectively.

Sotelo provides an excellent discussion of pretest uncertainty analysis and test planning [6].

7.4 EQUATIONS AND PROCEDURES FOR DETERMINING PRECISION INDEX

This Section contains equations and procedures for calculating the precision index. The required post-test uncertainty analysis uses actual data from the performance test. The recommended pretest uncertainty analysis uses predicted values for the parameter averages and precision indexes. The equations and procedures of this Section are aimed at a post-test uncertainty analysis, for which actual test data are available.

Process parameters (such as exit gas temperature or steam pressure) naturally exhibit perturbations about their true (or average) values. These perturbations are the *real variations* of the parameters. For a set of measurements of the process parameters, the instrumentation system superimposes further perturbations on the average values of the parameters. These instrumentation based perturbations are assumed to be independent random variables with a normal distribution. The variance of the measured value of a parameter is

$$\sigma_x^2 = \sigma_{xr}^2 + \sigma_I^2 \qquad (7.4\text{-}1)$$

where

σ_x^2 = the (population) variance of the measured value of parameter x

σ_{xr}^2 = the real (population) variance of parameter x

σ_I^2 = the (population) variance of the instrumentation system

The precision of an instrument is sometimes called the reproducibility of the instrument. Reproducibility includes hysteresis, deadband, and repeatability [7]. The instrumentation variance is often estimated from published data because testing of a specific instrument for its precision can rarely be justified.

For a post-test uncertainty analysis, the instrumentation variances are not specifically required, because they are already imbedded in the data. Knowledge of instrumentation variances may be needed when instrumentation alternatives are compared in a pretest uncertainty analysis. In most instances, an instrument's variance is small enough relative to the real variance of the parameter that the instrumentation variance may be ignored. If the instrumentation variance is less than one-fifth of the real variance of a measured parameter, the instrumentation precision error can be ignored.

7.4.1 Precision Index of Individual Parameters. The precision index of an individual parameter depends on the type of parameter, integrated-average or constant-value, and the method used to measure the parameter. Some of the methods are as follows:

- multiple measurements made over time at a single location, e.g., main steam pressure and power input to a motor driver
- multiple measurements made at several locations in a given plane, e.g., flue gas temperature, flue gas constituents, and air temperature at air heater inlet
- the sum of averaged measurements, e.g., total coal flow rate when multiple weigh feeders are used
- measurements on samples taken in multiple increments, e.g., fuel and sorbent characteristics
- multiple sets of measurements at weigh bins or tanks to determine the average flow rates, e.g., solid residue flow rates
- a single measurement
- the sum of single measurements

7.4.1.1 Multiple Measurements at a Single Point. For multiple measurements of a constant value parameter made over time at a single location, the precision index is

$$PI = S_x = \sqrt{\frac{s_x^2}{N}} \qquad (7.4\text{-}2)$$

where

$$s_x^2 = \left(\frac{1}{N-1}\right) \sum_{i=1}^{N} (x_1 = \bar{x})^2 \qquad (7.4\text{-}3)$$

The number of degrees of freedom is

$$\upsilon_x = N - 1 \qquad (7.4\text{-}4)$$

7.4.1.2 Integrated Average Parameters (Unweighted Averages). Examples of integrated average parameters are flue gas temperature and oxygen content. Multiple measurements are made over time at each of several points in a grid. The measurements over time at each point are averaged to determine the value of the parameter at the point:

Copyright ASME International
Provided by IHS under license with ASME
No reproduction or networking permitted without license from IHS
Not for Resale

$$x_i = \frac{1}{N}\sum_{j=1}^{N}(x_j)_i \qquad (7.4\text{-}5)$$

where N is the number of readings over time and i identifies the point in the grid. For *unweighted* averages x is the measured parameter, such as temperature or oxygen.

The sample standard deviations, sample standard deviations of the mean, and degrees of freedom are calculated *at each grid point* as if the parameter exhibited a constant value; that is by Eqs. (7.4-3), (7.4-2), and (7.4-4).

The precision index of the integrated average parameter depends on the averaging rule used.

For *multiple midpoint rule averages*, the precision index is:

$$PI = \frac{1}{m}\left[\sum_{i=1}^{m}(S_{x_i})^2\right]^{1/2} \qquad (7.4\text{-}6)$$

The associated degrees of freedom is

$$\upsilon = \frac{PI^4}{\sum_{i=1}^{m}\left[\frac{S_{x_i}^4}{(m^4\upsilon_i)}\right]} \qquad (7.4\text{-}7)$$

where

S_{x_i} = the precision index of the parameter at point i [from Eq. (7.4-2)]
m = the number of grid points
υ_i = the degrees of freedom of S_{x_i} which is the number of readings at point i minus one

For *triple midpoint rule averages*, the precision index is determined in two steps:

$$S_{wk}^2 = \sum_{j=0}^{\frac{p}{3}-1}\left[\frac{9S_{x3j,k}^2}{r_{3j,k}} + \frac{4S_{x3j+1,k}^2}{r_{3j+1,k}} + \frac{9S_{x3j+2,k}^2}{r_{3j+2,k}}\right] \qquad (7.4\text{-}8)$$

$$PI = \left[\frac{81}{4096p^2q^2}\sum_{k=0}^{\frac{q}{3}-1}(9S_{w3k}^2 + 4S_{w3k+1}^2 + 9S_{w3k+2}^2)\right]^{1/2} \qquad (7.4\text{-}9)$$

where

S_{wk} = the sample standard deviation of the kth set of measurements
$S_{xj,k}$ = the sample standard deviation with respect to time at point j,k [from Eq. (7.4-3)]
$r_{j,k}$ = the number of readings at j,k
p = the number of points in the x-direction
q = the number of points in the y-direction

The associated degrees of freedom is also determined in two steps:

$$\upsilon_{wk} = \frac{S_{wk}^4}{\sum_{j=0}^{\frac{p}{3}-1}\left[\frac{81S_{x3j,k}^4}{R_{3j,k}} + \frac{16S_{x3j+1,k}^4}{R_{3j+1,k}} + \frac{81S_{x3j+2,k}^4}{R_{3j+2,k}}\right]} \qquad (7.4\text{-}10)$$

where

$$\upsilon_x = \frac{S_x^4\,(64\,pq)^4}{6561\sum_{k=0}^{\frac{q}{3}-1}\left[\frac{81S_{w3k}^4}{\upsilon_{w3k}} + \frac{16S_{w3k+1}^4}{\upsilon_{w3k+1}} + \frac{81S_{w3k+2}^4}{\upsilon_{w3k+2}}\right]} \qquad (7.4\text{-}11)$$

$$R_{j,k} = r_{j,k}^2\,(r_{j,k} - 1)$$

For the *composite midpoint rule average*, the precision index is

$$PI = \left[\frac{9}{64p^2q^2}\sum_{k=0}^{q}\sum_{j=0}^{\frac{p}{3}-1}\left(\frac{9S_{x3j,k}^2}{r_{3j,k}} + \frac{4S_{x3j+1,k}^2}{r_{3j+1,k}} + \frac{9S_{x3j+2,k}^2}{r_{3j+2,k}}\right)\right]^{1/2} \qquad (7.4\text{-}12)$$

The associated degrees of freedom is

$$\upsilon_x = \frac{(8pq)^4}{81\sum_{j=0}^{\frac{p}{3}-1}A_j} \qquad (7.4\text{-}13)$$

where

$$A_j = \frac{81S_{x3j,k}^4}{R_{3j,k}} + \frac{16S_{x3j+1,k}^4}{R_{3j+1,k}} + \frac{81S_{x3j+2,k}^4}{R_{3j+2,k}} \qquad (7.4\text{-}14)$$

7.4.1.3 Integrated Average Parameters (Weighted Averages). Parameters such as flue gas temperature or oxygen are sometimes calculated as weighted averages. The weighting factor is the fluid velocity fraction evaluated at the same point as the parameter measurement. Calculation (or estimation) of the precision index for a flow-weighted integrated average depends on the available data for the velocity distribution.

Velocity measured simultaneously with the parameter, with several complete traverses. The number of readings at each point in the grid must be large enough to assure statistical significance. Generally six or more

Copyright ASME International
Provided by IHS under license with ASME
No reproduction or networking permitted without license from IHS
Not for Resale

readings are required. In this case, the precision index and degrees of freedom are calculated using Eqs. (7.4-2) through (7.4-14), as appropriate, with the parameter $x_{j,i}$ being the weighted value. For temperature, for example,

$$x_{j,i} = \left(\frac{V_{j,i}}{\overline{V}}\right) T_{j,i} \qquad (7.4\text{-}15)$$

where $\overline{V}$ is the space- and time-averaged velocity.

Velocity Measured Simultaneously With the Parameter with a Small Number of Complete Traverses. In this case, the precision index is estimated from a large number of readings taken at a single point. Instruments must be provided to simultaneously measure the velocity and the parameter at a single fixed point. The point should be selected so that the expected values of velocity and the parameter are approximately the average values. Data should be recorded with a frequency comparable to that for other data.

The instantaneous values from the point are multiplied to give a variable x_j:

$$x_j = \left(\frac{V_j}{\overline{V}}\right) T_j \qquad (7.4\text{-}16)$$

The sample standard deviation for x is calculated from Eq. (7.4-3). This sample standard deviation is used together with the statistical F distribution to estimate the standard deviation for the integrated average parameter following the method described in Subsection 7.4.1.4 using Eq. (7.4-18) and Table 4.8-1.

Velocity Measured Separately from the Parameter. The precision index of the weighted *average parameter* is:

$$PI_{FW} = \left[PI_{UW}^2 + (\overline{P}_{UW} - \overline{P}_W)^2 \frac{PI_v^2}{\overline{V}^2}\right]^{1/2} \qquad (7.4\text{-}17)$$

where

FW = the weighted average

UW = the unweighted average

P = the parameter (temperature or oxygen)

PI_{UW} is calculated as described in Subsection 7.4.1.2.

Ideally, the precision index of velocity is evaluated from multiple readings over time at each point in the velocity measuring grid. If such readings are not available, the precision index of velocity is estimated from multiple readings at a single point, together with the statistical F distribution, as described in the previous paragraph.

7.4.1.4 Measurements on Samples Taken in Multiple Increments. Samples of material streams are obtained and analyzed to determine the chemical composition of the streams. These streams may be gaseous (such as flue gas) or solid (such as coal, sorbent, and residue). Usually, these samples are obtained in increments; that is a finite sample is taken at periodic intervals. The sample locations may be separated in space, as in sampling multiple coal feeders or multiple points in a flue gas duct cross section, as well as in time. It should be noted that in this Code, solids composition is treated as a constant value parameter and flue gas composition is treated as a spatially nonuniform parameter. A second major difference between solid streams and gaseous streams is that the gaseous samples are usually analyzed "online" during the test while solid samples are usually analyzed in a laboratory at a later time.

There are two alternative means for determining the average properties of material samples taken in increments; therefore, there are two means for determining the precision index. The first method for determining the average properties uses a separate analysis of each individual sample. The average value for all samples (the value to be used in the performance calculations) is then determined as the mean of all of the individual sample results. In the second method, the individual samples are mixed together into a composite sample and an analysis is made of the composite sample. While there may be replicated analyses of the composite sample, there is still only one sample for analysis.

Often, a combination of both methods is the most cost-effective approach. Some constituents can be determined from a single analysis of a gross sample while other constituents are determined from analysis of individual samples. For example, when the steam generator fires coal from a single seam, the moisture and ash can be highly variable while the other constituents, expressed on a moisture-and-ash-free basis, are relatively constant. In this case, as-fired moisture and ash, and their precision indexes, should be determined from analysis of several individual samples, while the average values for the other constituents (on a moisture-and-ash-free basis) can be determined from a single analysis of a mixed gross sample. The following paragraphs describe determination of precision in these two cases.

Increments Individually Analyzed. If each incremental sample is properly mixed, reduced, and divided separately, the average value of a constituent is the mean of the analysis measurements. The precision index and degrees of freedom are determined from Eqs. (7.4-2) and (7.4-4).

Copyright ASME International
Provided by IHS under license with ASME
No reproduction or networking permitted without license from IHS
Not for Resale

Increments Mixed Prior to Analysis. If the sample increments are mixed prior to analysis, the various increments are mechanically averaged (an example is the "ganging" of several flue gas sampling lines into a mixing chamber or bubbler prior to analysis). If proper procedures have been followed in mixing and reducing the gross sample, the results of the analysis of the mixed sample may be considered a proper average. As there is only one set of results, the precision index cannot be calculated from statistics and must therefore be estimated.[3] It is often possible to obtain accurate estimates using historical data or, sometimes, limited measurements, for determining precision.

Estimates from Historical Data. Cases where this method can be used include those where past test data are available or when fuel or sorbent used during the test has been obtained from a source whose characteristics have been previously established. One criterion for a proper estimate is that the historical data and the test data are taken from the same measurement population. If this is the case, the data have the same *population* mean μ and the same *population* standard deviation σ. Moisture-and-ash-free constituents for coal mined from a single seam should satisfy this condition so that historical data from the same seam can be used to estimate the precision for the test data.

If a number of measurements are made from the same population, it is unlikely that the *sample* standard deviations will be the same. Suppose that historical data on a particular parameter (e.g., carbon content) are available. The historical data are based on n_H observations and have sample standard deviation s_H. Now imagine that a different set of data is available, consisting of n observations with sample standard deviation s. According to statistical theory,

$$\frac{s^2_{\max}}{s^2_{\min}} \le F_{n\max-1,\, n\min-1,5\%}$$

where $s_{\max}$ and $s_{\min}$ are the larger and smaller values of (s_H,s) and $F_{n\max-1,n\min-1,5\%}$ is the upper 5% point of the F distribution for $n_{\max}$ and $n_{\min}$ degrees of freedom (note that $F > 1$). Values for F are given in Table 4.8-1.

Now suppose that the number of readings in the second set is very large ($n \to \infty$). We can generate an estimate of the probable maximum value of the *population* standard deviation (σ) by assuming that s_H is the smaller of (s_H,σ). The precision index can be conservatively estimated by:

$$PI = \frac{[F_{nH-1,\infty} * s_H^2]^{1/2}}{N^{1/2}} \qquad (7.4\text{-}18)$$

where N is the number of individual samples that were mixed. The degrees of freedom for this estimate can be taken as infinite. Refer to Subsection 4.8.2 for additional requirements when using this method to estimate coal-constituent precision.

Estimates from Limited Measurements. To illustrate this approach, consider the precision of flue gas oxygen concentration, O_2. While samples are typically taken from several grid points in a duct cross section, seldom are the individual point samples analyzed; instead, samples are mixed and passed to a single analyzer. As flue gas oxygen concentration is a spatially nonuniform parameter, the mixing simulates the integrated-averaging process. If equal extraction rates are taken from each grid point, the process most closely matches multiple midpoint averaging. The point-to-point variation in O_2, although not revealed by the composite sample, is considered a bias due to numerical integration by this Code.

Even though the point-to-point variation is not considered as precision error, the variation over time at each point does contribute to precision error. Information on this variation is revealed only in the composite sample. It is assumed that several composite samples are taken and analyzed over time. The precision index and degrees of freedom should be calculated from Eqs. (7.4-2) and (7.4-4) and the results for the mixed samples as if the parameter (e.g., spatially averaged oxygen concentration) were a constant value parameter.[4]

7.4.1.5 A Single Measurement or the Sum of Single Measurements. For parameters determined by a single measurement or the sum of single measurements, the precision index is the square root of the estimate of the instrumentation variance. The magnitude of the precision index is likely to be small enough so that it can be neglected. The spatial and time variations of such parameters should be considered as biases, with appropriate estimates made for their magnitude. The problem of uncertainty of single measurements was considered extensively by Kline and McClintock [5].

[3] It should be noted that *multiple analyses* of the same gross sample can give the precision index of the analytical instruments and procedures but give *no information* about the real variation in the material properties or the sampling variation. In most cases, these latter two sources of variability dominate the precision of material properties.

[4] While it may be argued that the precision index and degrees of freedom are better than those calculated by Eqs. (7.4-2) and (7.4-4) because several points are sampled, it is impossible to determine these "better" values after the samples are mixed.

Copyright ASME International
Provided by IHS under license with ASME
No reproduction or networking permitted without license from IHS
Not for Resale

7.4.2 Precision Index and Degrees of Freedom for Intermediate Results. Frequently, a parameter used as if it were measured data is actually calculated from more primary measurements. Two examples are fluid flow rate, which is often determined from differential pressure measurements, and enthalpy, which is determined from temperature (and sometimes, pressure) measurements. There are two possibilities for calculating the precision index of these intermediate results. One is to use the "propagation of error" formula, Eq. (7.2-4), together with the equation(s) relating the intermediate result to the primary measurements. This is not as difficult as it appears because the equations connecting the intermediate results to the data are usually simple. The second option is to transform the data into the intermediate result prior to averaging and then calculate the precision index of the result. The following describes specific cases.

7.4.2.1 Parameters of the Form $z = C\sqrt{x}$. The measurements, x_i, should first be converted to z_i. Then the average and the sample variance of z can be calculated from the z_i. Differential pressure flow meters exhibit this type of parameter relationship.

7.4.2.2 Parameters of the Form $z = a_0 + a_1\bar{x} + a_2\bar{x}^2 + \ldots + a_n\bar{x}^n$. Equation (7.2-4) is applicable to functions of one variable; in this case the variable is $\bar{x}$. The sensitivity coefficient for $\bar{x}$ is

$$ {}_z\Theta_x = \frac{\partial z}{\partial x} = a_1 + 2a_2\bar{x} + \ldots + na_n\bar{x}^{n-1} \qquad (7.4\text{-}19) $$

The precision index is

$$ PI = ({}_z\Theta_x)\,(S_x^2) \qquad (7.4\text{-}20) $$

The degrees of freedom for z is the same as for x.

The most common occurrence of this form of equation in steam generator performance testing is an enthalpy-temperature relationship.

7.4.2.3 Parameters of the Form $z = C\bar{u}\bar{v}$. For this type of parameter, two choices are available. The first is to transform the primary data values (u_i, v_i) into the intermediate result (z_i) and then average the values of the intermediate result and calculate their precision index and degrees of freedom.

The second alternative calculates z from the averages of u and v

$$ z = C\bar{u}\bar{v} $$

and uses the "propagation of error" formula. The sensitivity coefficients are

$$ ({}_z\Theta_u) = C\bar{v} \text{ and } ({}_z\Theta_v) = C\bar{u} \qquad (7.4\text{-}21) $$

The precision index is

$$ PI = [(C\bar{v}\,S_u)^2 + (C\bar{u}S_v)^2]^{1/2} \qquad (7.4\text{-}22) $$

The degrees of freedom is

$$ \nu = \frac{\left(\frac{PI}{C}\right)^4}{\bar{v}^4\frac{S_u^4}{\nu_u} + \bar{u}^4\frac{S_v^4}{\nu_v}} \qquad (7.4\text{-}23) $$

7.4.2.4 Flow Rates Using Weigh Bins or Tanks. Weigh bins or tanks are used as integrating devices to smooth out variances in the flow rate. The desired flow rate generally is one occurring upstream of a component with storage capacity. For example, the catch of a baghouse can be determined by a weigh bin on the disposal line from the baghouse hoppers. If weight and time readings are taken at the beginning and the end of the test period, the average flow rate, w, is:

$$ w = \frac{u_2 - u_1}{\tau_2 - \tau_2} \qquad (7.4\text{-}24) $$

where

u_1, u_2 = the initial and final weight readings, respectively

τ_1, τ_2 = the initial and final time readings, respectively

As multiple measurements are not typically made of the weights and times, the precision of w depends on the instrumentation precision. The precision index is:

$$ PI = \left\{ 2\left[\left(\frac{w}{u_2 - u_1}\right)^2 \sigma_{ul}^2 + \left(\frac{w}{\tau_2 - \tau_1}\right)^2 \sigma_{\tau l}^2 \right] \right\}^{1/2} \qquad (7.4\text{-}25) $$

Generally, the magnitude of the instrumentation variances is small and the precision index can be neglected. The instrumentation *biases* are likely to be significant.

7.4.3 Precision Index and Degrees of Freedom of Test Results. If the test result is a measured parameter, such as the temperature of the flue gas exiting the steam generator, then the precision index and degrees

Copyright ASME International
Provided by IHS under license with ASME
No reproduction or networking permitted without license from IHS
Not for Resale

of freedom of the result are just the values for the parameter itself. If the test result must be computed from the measured data, such as steam generator efficiency, then the precision index and degrees of freedom of the result must be calculated from their values for the individual parameters.

7.4.3.1 Combining Precision Indexes. The precision index of a calculated result is obtained by combining the precision indexes of all of the parameters that affect the result according to the root-sum-square rule

$$PI_R = \left[\sum_{i=1}^{k} ({}_R\Theta_{x_i}\, PI_{x_i})^2 \right]^{1/2} \qquad (7.4\text{-}26)$$

where

${}_R\Theta_{x_i} = (\partial R/\partial x_i)$ = the sensitivity coefficient of parameter x_i on result R and k is the total number of parameters that are used to calculate R

7.4.3.2 Combining Degrees of Freedom. The degrees of freedom of the precision index of R is computed by:

$$\nu_R = \frac{PI_R^4}{\sum_{i=1}^{k} \dfrac{({}_R\Theta_{x_i}\, PI_{x_i})^4}{\nu_{x_i}}} \qquad (7.4\text{-}27)$$

7.4.3.3 Sensitivity Coefficients. The sensitivity coefficients are the partial derivatives of the result with respect to the parameter:

$$({}_R\Theta_{x_i}) = \left(\frac{\partial R}{\partial x_i}\right)_{x_i = \bar{x}} \qquad (7.4\text{-}28)$$

in accordance with Eq. (7.2-4).

Sometimes, it may be more convenient to work with a *relative sensitivity coefficient,* which is calculated by:

$$({}_R\Theta_{x_i}) = \left(\frac{\bar{x}_i}{R}\right)({}_R\Theta_{x_i}) \qquad (7.4\text{-}29)$$

The relative sensitivity coefficient is useful in a pretest analysis when judging the relative influence of the error in a particular parameter on the uncertainty of the test result.

7.4.3.4 Calculation of Sensitivity Coefficients. For test results such as steam generator efficiency, calculating the sensitivity coefficients analytically is cumbersome. An alternative is to calculate them by numerical methods using a computer. If a computer program is available to calculate the test resultant, R, from the parameters $x_1, \ldots, x_k$, then the sensitivity coefficients can be approximated by perturbing each parameter, one at a time, by a small amount (δx_i), keeping the value of the other parameters constant and evaluating the change in the calculated value of the test resultant, δR. The sensitivity coefficient is then

$$({}_R\Theta_{x_i}) = \left(\frac{\partial R}{\partial x_i}\right) \approx \frac{\delta R}{\delta x_i} \qquad (7.4\text{-}30)$$

δx_i is a small value such as $x_i/100$ or $x_i/1{,}000$.

For a pretest uncertainty analysis, predicted performance data are used for the average values. The actual average values of the measured parameters are used for a post-test analysis.

7.5 EQUATIONS AND GUIDANCE FOR DETERMINING BIAS LIMIT

Bias is a systematic or "built-in" component of the error. The bias error is what remains after all reasonable attempts to eliminate it (such as calibrating instruments) have been made. An essential characteristic of bias is that it cannot be determined directly from the test data. It is always necessary to estimate bias. Sometimes, models based on the test data or observations of conditions during the test can be used in making estimates, but they remain estimates nevertheless. A second essential fact concerning bias is that its value(s) is unique to the measurement system employed in a specific test and to the process and ambient conditions during the test.

This Section gives certain mandatory rules for making bias estimates and for mathematical manipulation of them. It also provides guidance and some models for estimating values of bias limits. Users of this Code are free to adopt, modify, or reject any models for bias set forth in this Section, provided that the parties to the test agree to do so and that they agree on an appropriate substitute.

7.5.1 General Rules

Bias limits used in this Code have the following characteristics:

- bias limits shall be agreed upon by the parties to the test
- bias limits should be estimated at a 95% confidence level; the maximum conceivable values of bias should not be used
- bias estimates may be one-sided or nonsymmetrical if the physical process so suggests and the parties to the

Copyright ASME International
Provided by IHS under license with ASME
No reproduction or networking permitted without license from IHS
Not for Resale

test agree that such estimates are the best available. If nonsymmetrical or one-sided bias limits are used, then it is necessary to propagate positive and negative values separately into the result.

Although the actual bias in any measurement or result is a fixed value, an *estimate* of the bias is a random variable. This Code specifies that bias estimates (bias limits) shall be combined by using the root-sum-square principle.

Generally, the same bias limits will be used for both pretest and post-test uncertainty analyses. Observations of conditions during the test may indicate that it is allowable to decrease one or more bias limits or that it is advisable to increase one or more bias limits. This shall be permitted if both parties to the test agree.

7.5.2 Biases in Measured Parameters Due to Instrumentation

There are a number of sources of instrumentation bias in any measurement; among those are: primary element, primary sensor, transducer, amplifier, analog/digital converter, recording device, and environmental effects. ISA Standard ANSI/ISA S51.1 may be consulted for general information about instrumentation bias [7].

Section 4 gives guidance for estimating bias limits due to specific instrumentation systems. This section provides general guidelines and rules for combining these elemental biases.

If separate components of an instrumentation loop or the entire loop has been calibrated and the calibration data (biases) are incorporated into the test data, the biases shall be excluded from the uncertainty analysis. Estimated biases resulting from drift in calibration, ambient effects, etc., are included in the uncertainty analysis.

7.5.2.1 Bias Due to a Single Component. If a *typical* calibration curve for an instrumentation component is available, the magnitude of the component's bias can be estimated. Figure 7.5-1 is a generic calibration curve. The deviation is the difference between the input, as measured by a standard, and the output of the device under steady-state conditions.

The deviation is expressed in a number of ways: units of the measured variable, percent of span, percent of output reading, etc. Figure 7.5-1 shows an envelope within which repeated readings at the same input have been made. The width of the envelope, A, is a measure of the precision of the device and is sometimes called the reproducibility of the device. Reproducibility includes hysteresis error, deadband, repeatability, and, occasionally, limited time drift.

The maximum positive or negative deviation from the zero deviation line, C, is sometimes called the "reference accuracy." The reference accuracy of a typical device can be used as an estimate of the corresponding biases of similar devices. Bias limits estimated from reference accuracy do not include the effects of drift, installation, etc.

If the curve is for a *specific* device, then the values to the midpoints, B, of the envelope at various inputs are to be used as calibration corrections in the data reduction. In this case, the bias limit is estimated as (A/2). Note that such estimates may not include biases arising from drift, ambient effects, etc.

If an instrument or an entire instrumentation loop has been calibrated for a test, the bias limit is estimated as the root-sum-square of the precision index of the calibration curve (the Standard Error of Estimate of the fitted curve) and the bias limit of the reference instrument. Refer to PTC 19.1, Measurement Uncertainty, for further information.

7.5.2.2 Combining Biases From Several Components. If an instrument system has several components and each has a separate bias limit, the combined bias limit of the measurement is

$$B = (B_1^2 + B_2^2 + \ldots + B_m^2)^{1/2} \qquad (7.5\text{-}1)$$

where subscripts 1, 2 . . . m represent the various components of the system. Because this root-sum-square rule is used, biases whose estimated magnitude is less than one-fifth of the largest in a specific loop may be ignored in calculating the bias of the parameter.

7.5.2.3 Multiple Measurements With a Single Instrument. For multiple measurements at a single location with a single instrument (such as measuring the temperature at several points in a flue gas duct cross section with the same thermocouple system) the instrumentation bias of the average value of the parameter is equal to the instrumentation bias of a single measurement:

$$B_x = B_{x_i} \qquad (7.5\text{-}2)$$

7.5.2.4 Multiple Measurements With Multiple Instruments at Several Locations. The most common example is the use of a fixed grid of thermocouples to measure (average) flue gas temperature. Two different situations may be present.

The first situation is when all instrument loops (each thermocouple plus lead wire, data logger, etc., consti-

Copyright ASME International
Provided by IHS under license with ASME
No reproduction or networking permitted without license from IHS
Not for Resale

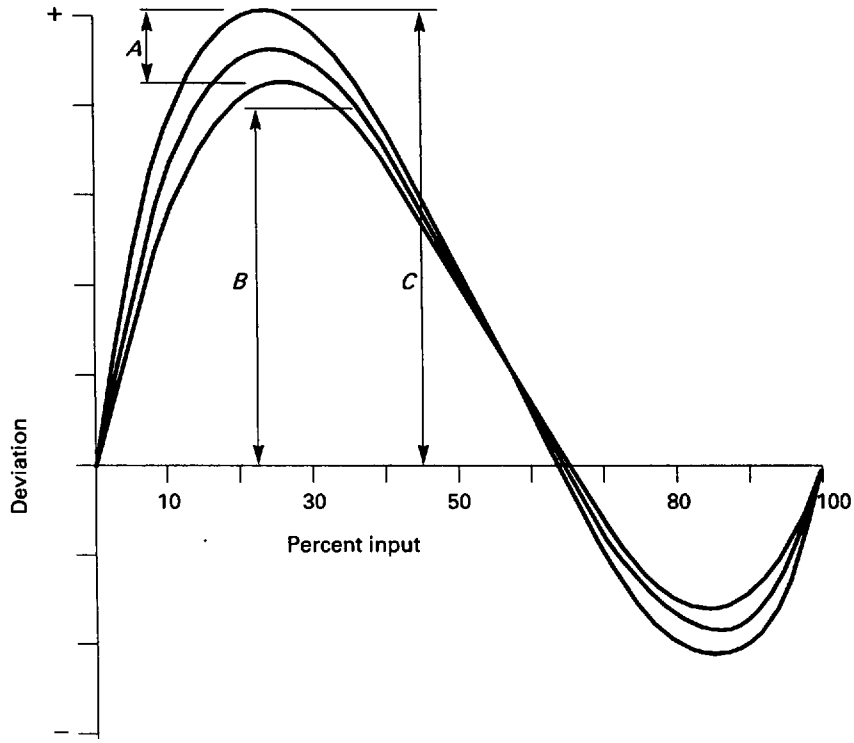

FIG. 7.5-1 GENERIC CALIBRATION CURVE

tutes one loop) are judged to have the same bias. This would typically occur when all thermocouples are of the same type and quality and all other components of each loop are identical. In this case, the instrument bias in the *average* parameter (temperature) is equal to the instrument bias for any one of the loops:

$$B_x = B_{x_i} \text{ (any } i\text{)} \qquad \text{(7.5-3A)}$$

The second situation is when different loops are judged to have different biases. This would occur if the thermocouples were of different types, or for a variety of other reasons. In this case, the instrument bias for the average parameter is the *average* of the biases for each loop:

$$B_{\bar{x}} = \frac{1}{N}\sum_{x=1}^{N} B_{x_i} \qquad \text{(7.5-3B)}$$

where

N = the number of different instrument loops

B_{x_i} = the bias of a single instrument loop i

7.5.3 Bias in Spatially Nonuniform Parameters. Certain parameters in a steam generator performance test, namely flue gas and air temperatures at the steam generator envelope boundaries and flue gas composition, should be evaluated as flow weighted integrated average values [8] (refer to Subsections 4.3.4 and 7.2.3).

In practice, integrated averages are approximated by sampling at a finite number of points and using a numerical approximation to the necessary integral. In addition to this approximation, the parties to the test may agree to forego measurement of the velocity and omit the flow weighting. In certain cases, e.g., flue gas composition, the samples may be mixed and mechanically averaged prior to analysis. Each of these approximations introduces an error which this Code treats as bias. These biases are in addition to instrumentation biases discussed in Subsection 7.5.2.

If measurements are made at only a few points (sometimes as few as one or two), then the methods suggested below for estimating these biases cannot be used. Likewise, these methods cannot be used for multipoint samples which are mixed prior to analysis.

Copyright ASME International
Provided by IHS under license with ASME
No reproduction or networking permitted without license from IHS
Not for Resale

In both cases, the bias in integrated averages must be estimated and assigned by agreement between parties to the test. Experience and data from previous tests on similar units can serve as the basis for a model. Bias estimates must be large enough to account for the indeterminate errors present in small samples.

7.5.3.1 Spatial Distribution Index. It is possible to make mathematically elegant estimates of numerical integration error; however, these estimates require knowledge of the exact distribution. Since this information is usually not available, a heuristic model is proposed for numerical integration bias. The model *assumes* that numerical integration errors are proportional to the following *spatial distribution index*:

$$SDI = \left[\frac{1}{A}\int (z - \bar{z})^2\, dA\right]^{1/2}$$

where z is the *time* averaged value of the continuously distributed parameter (temperature, oxygen content, etc.) and $\bar{z}$ is the *integrated* average value of z. Since *SDI* is itself an integral, it must be calculated by a numerical integration method. While it is probably advantageous to use the same integration rule that is used to calculate z for the performance calculations, the value calculated by the multiple midpoint rule is satisfactory:

$$SDI = \left[\frac{1}{m}\sum_{i=1}^{m} (z_i - \bar{z})^2\right]^{1/2} \qquad (7.5\text{-}4)$$

where m is the number of points in the measurement grid. In the case of a single stream (e.g., flue gas) divided between two or more separate ducts, *SDI* is calculated for each duct. It should be noted that although *SDI* as calculated by Eq. (7.5-4) appears to be identical to the "standard deviation," it does not have the same statistical significance.

If reliable historical data or data from a preliminary traverse are available, the parties to the test may agree to estimate the *SDI* for one or more parameters from this data.

7.5.3.2 Bias Due to Numerical Integration. Subsection 5.2.3.3 describes three numerical integration schemes (averaging rules). The recommended bias limits for each method are:

Triple Midpoint Rule

$$B_n = 0$$

Composite Midpoint Rule

$$B_n = \left[\frac{0.5}{(m-1)^2}\right] SDI \qquad (7.5\text{-}5)$$

Multiple Midpoint Rule

$$B_n = \left[\frac{1.0}{(m-1)^2}\right] SDI \qquad (7.5\text{-}6)$$

where m is the number of points in the measurement grid. The coefficients in Eqs. (7.5-5) and (7.5-6) were selected by the Code committee to reflect the relative magnitude of the biases and the dependence of the bias on the number of grid points but have no other theoretical basis. In the case of a single stream (e.g., flue gas) divided between two or more separate ducts, the model is applied to each duct. If historical or preliminary traverse data are used to estimate *SDI*, these bias estimates should be increased as appropriate to the applicability of the preliminary data to the actual test.

7.5.3.3 Bias Associated with Flow Weighting. Although the theoretically proper averages for some parameters such as flue gas temperature and oxygen content are flow-weighted, it is often not advisable to use flow weighting in a performance test because the errors associated with velocity determination may be greater than the error made by not flow weighting. There are, therefore, two different types of bias error associated with flow weighting:

- If flow weighting is used in the performance calculations, then there is a bias error due to the bias in the velocity data used for weighting.
- If flow weighting is not used in the performance calculations, then there is a (bias) error of method. This error is equal to the difference between the (true) weighted average and the unweighted average actually used in the calculations.

It is clear that only one of these two types of errors can be present in any one data set (either the average is weighted or it is not). This Code treats either type as flow weighting bias.

Flow Weighting Bias When Flow Weighting Is Used. There are two options in this case: (1) the velocity used for flow weighting is measured simultaneously with the parameter being weighted (temperature or oxygen content); and (2) the velocity used for flow weighting is measured in one or more preliminary traverses. In either case, it is assumed that the velocity data are deemed sufficiently accurate and statistically valid (see Subsection 4.3.4 for rules regarding use of velocity data for flow weighting).

Copyright ASME International
Provided by IHS under license with ASME
No reproduction or networking permitted without license from IHS
Not for Resale

For the *first option*, where the velocity is measured simultaneously with the parameter being averaged, the flow weighting bias estimate is:

$$B_{FW} = (\overline{P}_{UW} - \overline{P}_{FW}) \frac{B_V}{\overline{V}} \qquad (7.5\text{-}7)$$

where

$\overline{P}$ = the (integrated) average parameter (either temperature or oxygen concentration)
UW = unweighted averages
FW = weighted averages
B_V = bias limit for velocity
$\overline{V}$ = average velocity

For the *second option*, where the velocity is determined by preliminary traverse(s), the following is recommended:

$$B_{FW} = 2(\overline{P}_{UW} - \overline{P}_{FW}) \frac{B_V}{\overline{V}} \qquad (7.5\text{-}8)$$

The terms in this equation have the same meaning as above.

Flow Weighting Bias When Flow Weighting Is Not Used. In this case, the bias estimate is an estimate of the difference between the weighted and unweighted averages. Again, there are two options: (1) there are no reliable velocity data, or (2) preliminary velocity traverse data exist, but the parameters are nevertheless not flow weighted.

For the *first option*, where there are no reliable velocity data available, the bias limit for temperature is estimated as follows. First, a weighted average is estimated by:

$$\overline{T}_{FW} = \frac{1}{m} \sum_{i=1}^{m} \frac{\theta_i}{\theta} T_i \qquad (7.5\text{-}9)$$

where

m = number of points in the traverse plane
θ = absolute temperature ($\theta = T$ °F + 459.7)

The bias estimate is:

$$B_{T,FW} = 2(\overline{T}_{UW} - \overline{T}_{FW}) \qquad (7.5\text{-}10)$$

The bias limit for oxygen concentration is taken as the same percentage of the average value as the temperature bias:

$$\frac{B_{O_2,FW}}{\overline{O}_2} = \frac{B_{T,FW}}{\overline{T}} \qquad (7.5\text{-}11)$$

For the *second option*, where preliminary velocity data are available, but not used to calculate a weighted average, the recommended bias model is:

$$B_{FW} = P_{UW} - P_{FW} \qquad (7.5\text{-}12)$$

where the velocity data are used to calculate an estimate of the weighted average, P_{FW}.

7.5.3.4 Combined Bias for Integrated Averages. The combined bias for integrated average values is

$$B_{IA} = (B_I^2 + B_n^2 + B_{FW}^2)^{1/2} \qquad (7.5\text{-}13)$$

where B_I is the instrumentation bias discussed in Subsection 7.5.2.

7.5.4 Bias Due to Assumed Values for Unmeasured Parameters. The midpoint between reasonable "limiting" values of an assumed parameter normally should be used as the value of the parameter in performance calculations. Half the difference between the "limiting" values is normally used as a bias in uncertainty analyses. If, for example, the bottom ash flow rate was taken as a percentage of the total ash produced in a pulverized coal fired boiler, the percentage would be an assumed parameter. It would be the midpoint between the "limiting" values set, of course, by judgment and agreed to by the parties to the test.

In some cases, unsymmetrical bias limits may be used if physical considerations imply it. For example, an ash split cannot be 10% ±15%, as a negative 5% is unrealistic. Likewise, bias due to air infiltration into an oxygen sampling system cannot be positive (the true value can be lower than the measurement but not higher).

7.5.5 Bias Limit for Test Results. The total bias limit for a result calculated from the measured and assumed parameters is

$$B_R = \left[\sum_{i=1}^{k} ({}_R\Theta_{x_i} B_{x_i})^2 \right]^{1/2} \qquad (7.5\text{-}14)$$

Bias limits are independent parameters. If unsymmetrical bias limits are used, they must be carried separately to the final result. The sign of the product $({}_R\Theta_{x_i})(B_{x_i})$ determines the classification as positive or negative.

Copyright ASME International
Provided by IHS under license with ASME
No reproduction or networking permitted without license from IHS
Not for Resale

7.6 UNCERTAINTY OF TEST RESULTS

The precision index and the bias limit of a test result are combined into the test uncertainty according to:

$$U_R = [(t_{u,0.0025} PI_R)^2 + B_R^2]^{1/2} \qquad (7.6\text{-}1)$$

where

$t_{u0.025}$ = the percentile point of Student's t-distribution for $\nu = \nu_R$ degrees of freedom and a 95% confidence limit and is taken from Table 5.16-1 or Eq. (5.16-7). In addition to the value for U_R, the test report shall also state the values of PI_R, ν_R, and B_R

Copyright ASME International
Provided by IHS under license with ASME
No reproduction or networking permitted without license from IHS
Not for Resale

NONMANDATORY APPENDIX A
CALCULATION FORMS

A.1 INTRODUCTION

Calculation forms are provided at the end of this Appendix to aid the user in performing calculations in a logical sequence. The forms also are an instructional aid. Even when a computer program is used, it is suggested that the first-time user perform a set of calculations by hand. Brief instructions have been prepared for each calculation form; these should be supplemented by the main text, Sections 4, 5, and 7.

Due to the wide variety of the types of units and fuels addressed by this Code, several calculation forms have been developed for specific requirements. The purpose of each form is described briefly below:

- EFF — EFFICIENCY CALCULATIONS. Used to calculate efficiency by the energy balance method. It is necessary that the combustion calculation forms be completed first.
- CMBSTN — COMBUSTION CALCULATIONS. Used for the general combustion calculations such as excess air, dry gas weight, etc.
- GAS — GASEOUS FUELS. Used to convert the ultimate analysis of gaseous fuels from a percent volume basis to a percent mass basis. All calculations requiring a fuel analysis are on a percent mass basis.
- RES — UNBURNED CARBON AND RESIDUE CALCULATIONS. Used to calculate the weighted average of carbon in the residue, unburned carbon, and sensible heat of residue loss. When sorbent is used, this form is used to calculate the weighted average of carbon and carbon dioxide in the residue. These results are used in conjunction with the sorbent calculation forms to calculate unburned carbon and calcination fraction of calcium carbonate.
- SRB — SORBENT CALCULATION SHEET, MEASURED C AND CO_2 IN RESIDUE. Used in conjunction with the unburned carbon and residue calculation form to calculate unburned carbon in the residue and calcination. Percent sulfur capture, calcium to sulfur molar ratio, and losses and credits associated with sorbent and sulfur capture are also calculated.
- OUTPUT — OUTPUT. Used to calculate unit output. Provision is made for calculating superheater spray water flow by energy balance. For units with reheat, calculation of feedwater heater steam extraction flow, cold reheat flow, and reheat absorption are provided for.
- PREC — PRECISION DATA REDUCTION WORK SHEET. Used to average each data point with respect to time and to calculate the standard deviation. Conversion from digital (mv, ma, etc.) to English units and calibration correction factors are also performed on this form.
- BIAS — BIAS DATA REDUCTION WORK SHEET. Used to account for and calculate the bias limit for each measurement device, including all the components of the measurement.
- UNCERTa — UNCERTAINTY WORK SHEET NO. 1. Contains the input information for data reduction and information required for determination of the precision component of uncertainty. This work sheet is set up for spatially uniform parameters, i.e., parameters which vary with respect to time only. Form INTAVG should be used for spatially nonuniform parameters first. Separate forms are included for output and efficiency.
- UNCERTb — UNCERTAINTY WORK SHEET NO. 2. Contains the information required to calculate total uncertainty. Separate forms are provided for output and efficiency. The work sheet is set up for calculating the uncertainty effect on output and efficiency; however, this sheet can be used for any calculated item such as fuel flow, calcium/sulfur ratio, etc.
- INTAVG — UNCERTAINTY WORK SHEET INTEGRATED AVERAGE VALUE PARAMETERS. Contains the input information for data reduction and information required for determination of the precision component of uncertainty for spatially nonuniform parameters; i.e., any parameter which varies with both space and time, such as flue gas temperature in a large duct cross section.

A.2 SYSTEM OF UNITS

Fuel efficiency is a function of the percent input from fuel. Therefore, calculations that are related to

Copyright ASME International
Provided by IHS under license with ASME
No reproduction or networking permitted without license from IHS

Not for Resale

the fuel, such as airflow, use units of lbm/lbm of fuel or lbm/Btu input from fuel. The latter is a convenient system of units because, in effect, it is a normalized result. For example, 10% ash in the fuel has a meaning only when fuels with similar higher heating values (*HHV*) are compared. If the *HHV* of a fuel is 10,000 Btu/lbm fuel, 10% ash would be 10 lbm/million Btu. For a 5,000 Btu/lbm fuel, 10% ash would be 20 lbm/million Btu, or twice as much actual ash as the higher Btu fuel.

In the interest of space on the forms and convenient numbers to work with, the units used on the forms are abbreviated and are some multiple of the basic mass/mass or mass/unit of heat input. Some of the more frequently used abbreviations are described below:

- lbm/lbm — pound mass of one constituent per pound mass of another constituent or total. For example, lbm ash/lbm fuel is the mass fraction of ash in the fuel.
- lb/100 lb — pound mass of one constituent per 100 pound mass of another constituent or total. For example, lbm ash/100 lbm fuel is the same as percent ash in fuel.
- lb/10KBtu — pound mass per 10,000 Btu input from fuel. These are convenient units to use for the combustion calculations.
- lb/10KB — abbreviation for lb/10KBtu
- Klb/h — 1,000 pound mass per hour
- MKBtu/h — million Btu/h
- MKB — abbreviation for million Btu/h

A.3 ORDER OF CALCULATIONS

The calculation sequence is described below for three levels of complexity, depending upon fuel type. Prior to these calculations, the user will have to complete the following preliminary calculations:

- average the data with respect to time, Form PREC
- output — calculate the boiler output for the test conditions, Form OUTPUT
- temperature grids — calculate the average gas and air temperatures for each of the air and gas temperature grids as described in Section 5.17, Form INTAVG
- average entering air temperature — if air enters the steam generator envelope at different temperatures, for example, primary and secondary air, calculate the weighted average entering the air temperature. Refer to Section 5.13.
- average exit gas temperature (excluding leakage) — if the gas temperature leaves the steam generator envelope at different temperatures, for example, units with primary and secondary air heaters, the weighted average exit gas temperature is required. Refer to Subsection 5.13 and the input instructions for Form EFF. This item requires that the combustion calculations be completed first and is mentioned here only because it might require reiteration.
- gaseous fuels — calculate the ultimate analysis and *HHV* on a percent mass basis
- estimate the total input from fuel — the following calculations require an estimated fuel input. Refer to the input instructions for Form CMBSTN regarding estimating input. The estimated total input must be compared to the calculated result when the efficiency results are completed and the calculations reiterated if the difference is greater than 1%. Refer to Subsection 5.7.3.
- multiple fuels — calculate a composite fuel analysis and weighted average *HHV* based on the percent mass flow rate of each fuel. Use the measured fuel flow for the fuel(s) with the lesser input and calculate the fuel flow for the fuel with the major input by the difference between the total input and the input from the measured fuel flow.

A.3.1 Order of Calculations for Low Ash Fuels (Oil and Gas)

Step 1. Complete the combustion calculation forms, CMBSTN.

Step 2. Complete the efficiency calculation forms, EFF.

Step 3. If the unit configuration or fuel required estimating total input as described in Section A.3 above, repeat the calculations until convergence is obtained.

A.3.2 Order of Calculations for Fuels with Ash (Coal) — No Sorbent

Step 1. Complete the residue calculation form, RES.

Step 2. Complete the combustion calculation forms, CMBSTN.

Step 3. Complete the efficiency calculation forms, EFF.

Step 4. If the unit configuration or fuel required estimating total input as described in Section A.3 above, or the residue split was measured at some but not all locations as described for RES, repeat the calculations until convergence is obtained.

A.3.3 Order of Calculations When Sorbent Is Used. These instructions assume that the residue mass flow rate leaving the steam generator envelope is measured at some locations and calculated by difference for the unmeasured location. (Refer to instructions for RES.)

Copyright ASME International
Provided by IHS under license with ASME
No reproduction or networking permitted without license from IHS
Not for Resale

Step 1. Complete Items [1] through [10], Form RES.

Step 2. Complete the calculations on Forms SRBa and SRBb. The calculations are iterative until convergence on unburned carbon and calcination is obtained.

Step 3. Repeat Steps 1 and 2 until convergence is obtained for the mass rate of residue.

Step 4. Complete the remaining items on Form RES.

Step 5. Complete the calculations on the combustion calculation forms, CMBSTN.

Step 6. Complete the efficiency calculations on Forms EFF and SRBc.

Step 7. Compare the estimated fuel flow (input) to that calculated on EFFb, and repeat calculations in Section A.3 (if applicable) and Steps 1 through 6 until convergence is obtained.

A.4 EFFICIENCY CALCULATIONS — INSTRUCTIONS FOR EFF FORMS

The efficiency calculation forms are used to calculate efficiency as tested as well as efficiency corrected to standard or contract conditions. The combustion calculation forms, CMBSTN, must be completed prior to performing the efficiency calculations. These instructions are intended as an aid to completing the calculation form. The user should refer to Section 5 for details regarding the definition and calculation of individual losses and credits.

A.4.1 Form EFFa. This form contains the input data required for the efficiency calculations. Some efficiency calculations are performed on other calculation forms, if applicable, and so noted under the specific efficiency loss or credit items.

Items 1–6 Temperatures, °F. These items require that the user enter the temperature and determine an enthalpy for certain constituents. Calculation of enthalpy for wet air and wet flue gas requires data from the combustion calculation form (Items [10] through [25] below). Refer to Section 5 for calculation of enthalpies.

Item 1 Reference Temperature. The standard reference temperature for efficiency calculations in accordance with this Code is 77°F (25°C).

Item 2 Average Entering Air Temperature. Enter the average air temperature entering the steam generator envelope. Where more than one source of air, such as primary and secondary air, enters at different temperatures, the average entering air temperature is the weighted average of the different sources. Refer to Items [35] through [44] below.

Item 3 Average Exit Gas Temperature (Excluding Leakage). Enter the average gas temperature leaving the steam generator envelope. When an air to gas heat exchanger is used and there is air leakage from the air to gas side of the air heater, this is the gas temperature corrected for leakage (gas temperature excluding leakage). When gas leaves the steam generator envelope at different temperatures, such as on a unit with primary and secondary air heaters, this is the weighted average of the gas temperature leaving each location (excluding leakage if leaving air heater). Refer to Items [45] through [51] below.

Item 4 Fuel Temperature. Enter the temperature of the fuel entering the steam generator envelope. This item is required to calculate the enthalpy of fuel. For multiple fuel firing, calculate an average enthalpy based on the percent input of each fuel.

Items 5, 6 Hot Air Quality Control Equipment. These items refer to equipment such as hot precipitators where there is a combined efficiency loss due to surface radiation and convection, and air infiltration. If applicable, enter the gas temperature entering and leaving the equipment.

Items 10–25 Results From Combustion Calculation Form CMBSTN. These items are calculated on the combustion calculation forms and the item number from those forms is indicated in brackets.

Item 10 Dry Gas Weight [77]. Enter the dry gas weight leaving the boiler, economizer, or entering the air heater (no hot AQC equipment). This is normally the boiler operating control point for excess air. This item is used to calculate the dry gas loss. The loss due to air infiltration beyond this point will be accounted for by either the air heater gas outlet temperature corrected for leakage, hot AQC equipment loss, or separately as an additional air infiltration loss. This should be a mass weighted value for units with separate air heaters.

Copyright ASME International
Provided by IHS under license with ASME
No reproduction or networking permitted without license from IHS
Not for Resale

Item 11	Dry Air Weight [69]. Enter the dry air weight corresponding to the same location as Item [10] above. This should be a mass weighted value for units with separate air heaters.
Items 12–14	Water from Fuel. Enter results from combustion calculation form as indicated.
Item 15	Moisture in Air, lb/lb DA [7]. This item is required to calculate the enthalpy of wet air.
Item 16	Moisture in Air, lb/10KB [72]. Enter the moisture in air on an input from fuel basis corresponding to the same location as Item [10] above.
Item 17	Fuel Rate Estimated, Klb/h [3]. Enter the estimated mass flow rate of fuel. Refer to Item [3] on Combustion Form a.
Items 18, 19	Enter values as described.
Items 20–23	Hot AQC Equipment. Refer to Items [5] and [6] for applicability. The item "E" refers to entering the equipment, and "L" refers to leaving the equipment.
Item 25	Excess Air Leaving Steam Generator, %. Enter the calculated excess air leaving the steam generator and entering the air heater(s). This should be a mass weighted value for units with separate air heaters.
Item 30	Unit Output, MKBtu/h. Enter the unit output in units of million Btu per hour.
Item 31	Auxiliary Equipment Power, MKBtu/h. Enter the input to the steam generator envelope from auxiliary equipment in units of million Btu per hour. This item is the credit for energy supplied by auxiliary equipment power. If applicable, this item must be calculated and the result entered here. Refer to Section 5. Note that energy added to the envelope is credited; the power to the driving equipment must be reduced by the overall drive efficiency which includes the motor, coupling, and gear drive efficiency.
Items 32–33	Loss Due to Surface Radiation and Convection, %. Items [33A] through [33D] can be used if this loss is calculated.

The calculations of Items [35] through [44] are required only when two or more air streams enter the unit at different temperatures. Units with separate primary and secondary air streams and pulverized coal fired units with atmospheric tempering air are examples of units that require these calculations.

Item 35A	Primary Air Temperature Entering, °F. This is the temperature of the primary air as it enters the boundary and normally the same as Item [16B] on Form CMBSTNa.
Item 35B	Calculate the enthalpy of wet air based on the moisture in air content indicated for Item [7], CMBSTNa.
Item 36A	Primary Air Temperature Leaving Air Heater, °F. This item is required only when pulverizer tempering air calculations are required for pulverized coal fired units. Refer to Item [38A].
Item 36B	Calculate the enthalpy of wet air. Refer to Item [35B].
Item 37A	Average Air Temperature Entering Pulverizers, °F. This item is required only when pulverizer tempering air calculations are required for pulverized coal fired units. Refer to Item [38A].
Item 37B	Calculate the enthalpy of wet air. Refer to Item [35B].
Item 38A	Average Pulverizer Tempering Air Temperature, °F. This item is required to calculate pulverizer tempering airflow for pulverized coal fired units. When the pulverizer tempering air temperature is different from the entering primary air temperature, Item [35A], it is necessary to calculate the pulverizer tempering airflow to obtain the average entering air temperature. The temperature of pulverizer tempering airflow may also be helpful in evaluating air heater performance.
Item 38B	Calculate the enthalpy of wet air. Refer to Item [35B].
Item 39	Secondary Air Temperature Entering, °F. Enter value from Form CMBSTNa, Item [16A].
Item 40	Primary Airflow (Entering Pulverizer), Klb/h. Enter the measured primary airflow. For pulverized coal fired units, this is the total airflow to the pulverizers, including tempering airflow.
Item 41	Pulverizer Tempering Airflow, Klb/h. Calculate the pulverizer tempering airflow by energy balance as indicated. Note that the calculations assume that the measured primary airflow includes the tempering airflow.
Item 42	Total Airflow, Klb/h. Enter the calculated value from Form CMBSTNc, Item [96], based on the excess air leaving the pressure part boundary.

Copyright ASME International
Provided by IHS under license with ASME
No reproduction or networking permitted without license from IHS Not for Resale

Item 43 Secondary Airflow, Klb/h. Calculate the secondary airflow by difference.

Item 44 Average Entering Air Temperature, °F. Calculate the weighted average entering air temperature.

The calculations of Items [45] through [51] are required only for units with separate primary and secondary air heaters.

Item 45A Flue Gas Temperature Entering Primary Air Heater, °F. Enter measured flue gas temperature from CMBSTNb Item [50].

Item 45B Calculate the enthalpy of wet flue gas based on the flue gas moisture and solids content determined on Form CMBSTNc, Items [78] and [81].

Item 46A Flue Gas Temperature Leaving Primary Air Heater. Enter calculated value excluding air heater leakage from Form CMBSTNc, Item [88].

Item 46B Calculate the enthalpy of wet flue gas. Refer to Item [45B].

Item 47 Flue Gas Temperature Leaving Secondary Air Heater. Enter calculated value excluding air heater leakage from Form CMBSTNc, Item [88].

Item 48 Total Gas Entering Air Heaters, Klb/h. Enter calculated value from Form CMBSTNc, Item [93].

Item 49 Flue Gas Flow Entering Primary Air Heater, Klb/h. Calculate by energy balance as indicated.

Item 50 Gas Flow Entering Secondary Air Heater. Calculate by difference as indicated.

Item 51 Average Exit Gas Temperature, °F. Calculate the weighted average exit gas temperature.

The above calculations or Item [51] must be iterated to determine the primary/secondary air split. An air split must initially be assumed and then recalculated until convergence occurs.

A.4.2 Form EFFb

Calculation of the major and most universally applicable losses and credits are provided for on this form. The losses and credits are separated into those that can be conveniently calculated on a percent input from fuel basis and those that can be calculated on a Btu/h basis (units of million Btu per hour are used). The efficiency is then calculated directly in accordance with the equation for Item [100]. For losses or credits calculated on a percent input from fuel basis, enter the result in Column B, %. For losses or credits calculated on input basis, enter the results in Column A, MKB (million Btu/h). Upon completion of the input from fuel calculation, Item [101], those items calculated on an input basis can be converted to a percent fuel efficiency basis by dividing the result by the input from fuel and multiplying by 100. Each section of losses and credits contains an item titled "Other," which refers to the results from Form EFFc.

The calculation of losses and credits is generally self-explanatory with the aid of the instructions for the input form, EFFa. Refer to Section 5 for definitions and explanations.

Item 75 Surface Radiation and Convection Loss. This is the one item on this form for which a complete calculation form has not been provided. Refer to Items [33A] through [33D] from EFFa for required measured parameters. If a test has been performed, enter the test result. Refer to Section 5 for estimating a value to use for contract or reference conditions.

Item 100 Fuel Efficiency, %. Calculate fuel efficiency in accordance with the equation. This equation allows the direct computation of efficiency using losses and credits calculated in mixed units.

Item 101 Input from Fuel, MKB. Calculate the input from fuel in million Btu per hour in accordance with the equation.

Item 102 Fuel Rate, Klbm/h. Calculate the mass flow rate of fuel based on the measured efficiency and measured output. For some units, an estimated mass flow rate of fuel (input) is required for the calculations. This item should be compared to Form EEFa Item [17], and if the result is not within 1% (refer to Section A.3 or Subsection 5.7.3 for convergence tolerance based on application), the CMBSTN (and applicable accompanying calculations) should be repeated until convergence is obtained. Examples of where fuel rate is required (but not necessarily limited to) are:

- more than one source of entering air temperature, not all sources measured (use calculated total airflow to calculate weighted average)
- more than one source of exiting gas temperature, not all sources measured (use calculated total gas flow to calculate weighted average)

Copyright ASME International
Provided by IHS under license with ASME
No reproduction or networking permitted without license from IHS
Not for Resale

- residue mass flow rate measured at some locations and calculated result used to determine total
- sorbent used
- multiple fuel firing

A.4.3 Form EFFc. This form provides for entering the results of losses and credits that are not universally applicable to all fossil fired steam generators and are usually minor. Refer to Section 5 for the definition of the losses. For any unit to be tested, if the losses/credits are applicable, it should be indicated whether they were tested or estimated. The calculated or estimated result should be entered where appropriate. It is noted that it is not possible to identify all potential losses/credits in a changing technology. This form should also be used to record the results of losses and credits that are not currently identified.

A.5 COMBUSTION CALCULATIONS — INSTRUCTIONS FOR CMBSTN FORMS

The combustion calculation forms are used to perform all combustion calculations. They are useful for normal power plant performance monitoring calculations and for efficiency calculations. Users will find this calculation form readily adaptable to a spreadsheet program as well as a subroutine(s) for a larger program.

The calculations on this form include the following:

- excess air for O_2, wet or dry basis
- O_2, CO_2, and SO_2 on a wet or dry basis for excess air (commonly used for a stoichiometric check on orsat and/or analyzer results)
- conversion of O_2, CO_2, and SO_2 from a wet to dry or dry to wet basis
- dry gas weight, used for efficiency calculations
- wet gas weight, used for energy balance calculations
- dry and/or wet air weight
- determination of air infiltration
- calculation of corrected air heater exit gas temperature (temperature excluding air heater leakage)
- percent moisture in flue gas, used for determining enthalpy of flue gas
- percent residue in flue gas, used for determining of enthalpy of flue gas (high ash fuels or when sorbent used)
- fuel, residue, flue gas, and air mass flow rate when input is known
- fuel analysis check based on theoretical air. This is a check on whether the fuel analysis is reasonable. Refer to Section 5.

A.5.1 Form CMBSTNa. This form contains most of the input required to complete the three combustion calculation forms. Some of the general input and impacting combustion/efficiency calculations required for other calculation forms are also contained here. Below are supplementary comments to assist the user. Refer to Section 5 of the Code if more in-depth explanation is required.

Item 1	HHV — Higher Heating Value of Fuel, Btu/lbm As Fired. This item must be consistent with the fuel analysis in Item [30]. When multiple fuels are fired simultaneously, this is the weighted average HHV based on percent mass flow rate from each fuel. (Refer to Section 5.)
Item 2	UBC — Unburned Carbon, lbm/100 lbm fuel from RES or SRBb Form. Also enter in Item [30B]. For gaseous and liquid fuels, this item is normally zero. For solid fuels with ash and/or when sorbent is used, completion of the residue calculation form, RES, is required if UBC is tested. For general combustion and excess air calculations, use a typical value for the type unit.
Item 3	Fuel Flow, Klbm/h [4a] or [4b]. For some intermediate calculations (in particular when residue mass flow rates are measured and/or when sorbent is used), the calculations require a fuel flow. For the first interaction, the fuel flow is estimated. The calculations are reiterated using the calculated fuel flow until convergence is obtained. For the first estimate, the user may use measured fuel flow, Item [4a], or calculated fuel flow, Item [4b], from measured output and estimated efficiency. If the operating characteristics of a unit are known, the calculated fuel flow based on an estimated fuel efficiency is usually better than the measured fuel flow.
Item 4a	Measured Fuel Flow, Klbm/h. Refer to Item [3].
Item 4b	Calculated Fuel Flow, Klbm/h. Refer to Item [3]. Calculated result, Option 4b, and used for subsequent efficiency calculation iterations when fuel flow is required.

Copyright ASME International
Provided by IHS under license with ASME
No reproduction or networking permitted without license from IHS
Not for Resale

Item 5 Output, MKBtu/h. Required to calculate fuel flow, Option 4b, and used for subsequent efficiency calculation iterations when fuel flow is required.

Item 6 Fuel Efficiency, % (estimate initially). Required to calculate fuel flow, Option 4b, and used for subsequent efficiency calculation iterations when fuel flow is required.

Item 7 Moisture in Air, lbm/lbm Dry Air. This item is required for the general gas and air mass flow calculations and is required for excess air/O_2 calculations on a wet basis. Refer to Items [8] through [11]. If moisture in air is not measured, a standard value may be used. The standard US industry value is 0.013 lbm H_2O/lbm dry air (80°F ambient and 60% relative humidity).

Items 8–11 These items are required to calculate moisture in air. Moisture in air may be determined from relative humidity and dry-bulb temperature and/or wet- and dry-bulb temperature. Refer to Section 5 for calculation procedure.

Item 12 Summation Additional Moisture Measure, Klbm/h. Enter any moisture introduced into the air/flue gas in the spaces above. When steam soot blowers are used, enter the average value for the test period.

Item 13 Additional Moisture, lbm/100 lbm Fuel. Convert the additional moisture to an lbm moisture per 100 lbm fuel basis. When atomizing steam is the only source of additional moisture, this value is frequently measured and/or agreed upon prior to a test on a lbm H_2O/100 lbm fuel basis, in which case this agreed upon value would be entered here.

Item 14 Additional Moisture, lbm/10KBtu. Convert additional moisture above to lbm/10KBtu basis.

Item 15 Gas Temperature Leaving Air Heater, °F; Primary/Secondary or Main. This item is used for the calculation of gas temperature leaving the air heater(s) corrected for no leakage (excluding leakage). If there is no air heater, this item may be ignored. If applicable, enter the measured gas temperature (including leakage). Space is provided for two types of air heaters. Values for multiple air heaters of the same type are usually averaged for efficiency calculations but may be calculated individually for more detailed analysis of individual air heater performance and leakage and the results averaged later. Refer to Items [45] through [51] on EFFa for separate air heaters with different flow rates.

Item 16 Air Temperature Entering Air Heater, °F, Primary/Secondary or Main. Refer above for multiple air heaters. Enter air temperature entering each air heater compatible with format above. This temperature is used to calculate the corrected gas temperature leaving the air heater (excluding leakage). For a trisector air heater (two air streams entering air heater with one gas stream leaving), enter the weighted average air temperature of the infiltrating air based on the expected air to gas leakage splits for each entering air stream supplied by the manufacturer (refer to Item [18C] below).

Item 17 O_2 Entering Air Heater, Primary/Secondary or Main. Enter the measured oxygen content entering each air heater.

Item 18 O_2 Leaving Air Heater, Primary/Secondary or Main. Enter the measured oxygen content leaving each air heater.

Item 18C Enter the weighted average air to flue gas leakage split. This would normally be based on the manufacturer's data.

Fuel Analysis, % Mass as Fired. Enter in Column [30]. This analysis must correspond to the *HHV* in Item [1]. For multiple fuel firing, this is the composite analysis. Refer to Item [1].

Item 19 Mass Ash, lbm/10Kbtu. The mass fraction of total residue is required at specific locations to determine the enthalpy of flue gas. For low ash fuels when sorbent is not used, the sensible heat of ash in flue gas can be ignored when the enthalpy of flue gas is determined.

If sorbent is not used and the result of the calculation for Item [19] is less than 0.15 lbm/10KBtu, enter zero for Item [79] for each column where O_2 is entered.

If the result of Item [19] is greater than 0.15 lbm/10KBtu or sorbent is used, enter the mass fraction of residue in the flue gas with respect to the total residue leaving the steam generator envelope under

Copyright ASME International
Provided by IHS under license with ASME
No reproduction or networking permitted without license from IHS Not for Resale

Item [79] for each column where O_2 is entered. This normally can be calculated from Item [8] on the residue form (RES) depending upon whether sorbent is used. For example, if there is 75% residue leaving the air heater, enter 0.75 under Item [79] for entering and leaving the air heater.

Items 20–25 These items are applicable only if sorbent is used. Enter zero if not applicable. It is noted that any addition of solids other than fuel qualifies as sorbent for calculation purposes. If applicable, the residue (RES) and sorbent (SRB) calculation sheets must be completed and the results entered for these items.

A.5.2 Form CMBSTNb

Items 30–34 Complete calculations as indicated. The term K refers to the constant in the column under the Item number. Refer to Section 5 for the significance of the individual columns. If the sorbent calculation forms (SRB) were used, Items [31], [32], and [33] are the same as SRBa Items [16], [17], and [18], and the previously calculated results may be copied.

Item 35 Total Theoretical Air Fuel Check, lb/10KB. All fossil fuels have a statistical theoretical air range that should be checked to ensure that the fuel analysis is reasonable. Refer to Section 5.

A.5.2.1 Corrections for Sorbent Reactions and Sulfur Capture

Items 40–44 The calculations are descriptive and self-explanatory. Enter zero for Items [40] through [42] if sorbent is not used.

Items 46–48 Theoretical air expressed in different units. Calculations are in a logical progression, and different units are required for convenience of other calculations.

Item 49 Wet Gas from Fuel, lbm/10KB. This is the mass of gaseous combustion products from fuel on an input from fuel basis.

A.5.2.2 Calculation of Excess Air Based on Measured O_2. Items [50] through [60] on CMBSTNb are used to calculate excess air when O_2 is measured. The CMBSTN calculation forms may also be used to calculate O_2, CO_2, SO_2, air, and gas weights when excess air is known, such as when calculating dry gas weight for efficiency corrected to contract conditions. If excess air is known, proceed to Item [60] on CMBSTNc.

LOCATION Enter description such as "AH IN," "AH OUT," "SAH IN," etc., in accordance with input from Item [16].

Item 50 Enter the measured flue gas temperature entering the air heater(s).

Item 51 Enter the measured combustion air temperature leaving the air heater(s).

Item 52 Enter the flue gas O_2 entering and leaving the air heater(s). This should be the sum values entered on EFFa, Items [17A], [17B], [18A], and [18B].

Item 53 Moisture in air. If O_2 at location is on a dry basis, enter zero. If O_2 at location is on a wet basis, enter the result of the calculation.

Item 54 Enter the appropriate value depending upon whether the O_2 for the location is on a wet or dry basis.

Item 55 If O_2 at location is on a dry basis, enter zero. If on a wet basis and there is additional moisture (refer to Item [13]), perform calculation.

Items 56–58 These calculations are reduced to several steps to simplify the calculation of excess air by using a calculator.

Item 60 The calculation process yields excess air, %.

A.5.3 Form CMBSTNc

Item 60 Enter excess air calculated on CMBSTNb or, if combustion calculations are desired for a specific excess air, such as corrections to contract conditions, enter the known excess air.

Items 61–68 These items are used to calculate CO_2 and SO_2 stoichiometrically, such as to check orsat or analyzer readings and to calculate O_2 when excess air is known. These items are not required for the remaining combustion calculations and may be skipped.

If the stoichiometric O_2, CO_2, and SO_2 results are desired, complete items [62] and [64] to obtain O_2, CO_2, and SO_2 on a dry basis and items [63] and [65] to obtain O_2, CO_2, and SO_2 on a wet basis. When orsat CO_2 results are checked, the orsat CO_2 reading is actually $CO_2 + SO_2$ since the orsat CO_2 sorbent also absorbs SO_2.

Copyright ASME International
Provided by IHS under license with ASME
No reproduction or networking permitted without license from IHS
Not for Resale

A.5.3.1 Flue Gas Products, lbm/10KBtu

Items 69–74 The mass of the products that make up wet flue gas on an lbm/10KBtu input from fuel basis.

Item 75 The mass of wet flue gas is the sum of the products in the wet flue gas on an lbm/10KBtu basis.

Item 76 The sum of water in the flue gas on an lbm/10KBtu basis.

Item 77 The mass of dry flue gas is the difference between the mass of wet flue gas less the total mass of water in wet flue gas.

Item 78 The moisture in wet flue gas expressed on a percent mass basis. This item is used to determine the enthalpy or specific heat of wet flue gas.

Items 79–81 Required to determine the enthalpy of wet flue gas. For gas, oil, and other low ash fuels, these calculations may be omitted. Refer to Item [19].

Item 79 The mass fraction of residue in flue gas at location with respect to the total residue leaving the steam generator envelope. Refer to Item [19].

Item 80 The mass of residue leaving the steam generator envelope on an lbm/10KBtu basis. It is the sum of the ash in fuel, unburned carbon, and spent sorbent products. If residue is recycled from a point downstream of the location, the mass of recycled residue must be added.

Item 81 The mass fraction of residue in wet flue gas, lbm/lbm wet gas.

Item 82 Leakage, % Gas Entering. This item is used to calculate the air infiltration between two locations, for example, when the O_2 entering and leaving the air heater(s) has been entered. Item [75E] is the wet gas weight entering and Item [75L] is the wet gas weight leaving as calculated above.

Items 83–88 Used to calculate the gas temperature leaving an air heater corrected for no leakage, or gas temperature excluding leakage. These items may be skipped if there is no air heater or temperature is not measured.

Item 83 Enter (from Item [15]) the measured temperature of the gas leaving the air heater.

Item 84 Enter (from Item [16]) the temperature of the air entering the air heater.

Item 85 Enter the enthalpy of wet air based on the temperature of the gas leaving the air heater (in Item [83]) and the moisture in air (in Item [7]).

Item 87 Enter the specific heat of wet flue gas based on the temperature of the gas leaving the air heater (in Item [83]), moisture in flue gas entering the air heater (in Item [78E]), and residue in wet flue gas entering the air heater (in Item [81E]). If the corrected temperature of the gas leaving the air heater is significantly higher than the measured gas temperature, use the average between the measured and corrected gas temperature to determine the mean specific heat of flue gas.

Item 88 Calculate the corrected air heater gas outlet temperature or gas temperature excluding leakage. This is the temperature of the gas leaving the steam generator envelope that is used for the energy balance efficiency calculations.

A.5.3.2 Air, Gas, Fuel Mass Flow Rates, Klbm/h.

These items are calculated after the efficiency calculations have been completed but are included on this form since the calculations fall under the general category of combustion calculations.

Item 90 Enter the input from fuel from the efficiency calculation form in million Btu/h.

Items 91–93 Calculate the fuel rate, residue rate, and wet flue gas rate in Klb/h.

Item 95 Enter the percent excess air if calculating the total air weight to the boiler is desired. This item is commonly required to calculate the weighted average air inlet temperature for determining efficiency when air is supplied from two sources such as primary and secondary air fan. It may also be required to correct air resistance to contract conditions. O_2 (excess air) is usually measured at the boiler exit; most units have some setting infiltration and/or seal air, and thus the calculated value using the excess air leaving the boiler will be higher than the actual flow through the forced draft fan(s). For air resistance and/or fan power corrections, an allowance for setting infiltration may be desired.

Item 96 Calculate the total wet airflow based on the excess air in Item [95].

Copyright ASME International
Provided by IHS under license with ASME
No reproduction or networking permitted without license from IHS
Not for Resale

A.6 GASEOUS FUELS — INSTRUCTIONS FOR GAS FORM

The gaseous fuel calculation form is used to convert a gaseous fuel analysis from a percent volume basis to a percent mass basis. The ultimate analysis of a gaseous fuel is reported in terms of the as-fired fuel components (such as CH_4, C_2H_6) on a percent volume basis. The higher heating value of a gaseous fuel is reported on a volume or Btu/ft^3 basis. The calculations in this Code require an elemental fuel analysis on a percent mass basis and a higher heating value on a mass or Btu/lbm basis. The components of the elemental analysis are C, H_2, O_2, N_2, S, and H_2Ov.

Item 1 Fuel Type. This item is provided to allow the user to identify the fuel source.

Item 2 Ultimate Analysis, % by Volume. Enter the percent by volume of each gaseous component in Column 5. Space is provided for additional components.

Item 3 Density of Constituent, lbm/ft^3. The reference conditions for density are 60°F (15.6°C) and 30 in. Hg (762 mm) in accordance with the standard reference temperature for reporting the higher heating value of gaseous fuels.

Item 4 Density of Gas. Multiply Columns 2 and 3 to obtain the gas density of each constituent.

Item 5 The higher heating value of each constituent is provided. Refer to Item [3].

Item 6 Higher Heating Value of Gas. Multiply Columns 2 and 5 to obtain the *HHV* of each constituent.

Items 7–12 Elemental Constituents, moles/100 moles gas. Calculate the molar percentage of the elemental constituents and enter the sum for each constituent on Line 14. The constant *K* refers to the constant in each column and is the number of moles of each elemental constituent in the fuel component. Note that water, H_2Ov, is considered to be in the vapor state.

Item 14 MW, lbm/mole. The molecular weight of each elemental constituent is given on this line.

Item 15 Mass, lbm/100 moles. Calculate the mass of each elemental constituent and enter the result for each column of Line 16.

Item 16 Summation of Line 16. Enter the summation Line 16.

Item 17 Analysis, % mass. Calculate the ultimate analysis of each elemental constituent and enter the result on this line. The calculated result of the largest constituent should be rounded so that the summation of the constituents equals 100.00%.

Item 18 Density at 60°F and 30 in. Hg, lbm/ft^3. Calculation of the density is based on the sum of Column 4.

Item 19 Higher Heating Value, Btu/ft^3. Calculate the higher heating value on a volume basis. This is the total of Column 6 divided by 100.

Item 20 Higher Heating Value, Btu/lbm. The higher heating value is calculated as indicated.

A.7 UNBURNED CARBON AND RESIDUE CALCULATIONS — INSTRUCTIONS FOR RES FORM

This form is used to calculate the weighted average of carbon in the residue, unburned carbon, and sensible heat of residue loss. When sorbent is used, this form is used to calculate the weighted average of carbon and carbon dioxide in the residue. These results are used in conjunction with the sorbent calculation forms to calculate unburned carbon and calcination fraction of calcium carbonate.

Determine where ash is removed from the unit, and enter the description under "Location." Typical locations are furnace bottom ash (bed drains), economizer or boiler hoppers, and multiclone rejects and fly ash leaving the unit.

It is necessary to know the quantities of ash leaving the unit at each location in order to determine the weighted average of carbon (and carbon dioxide for units with sorbent) in the residue and sensible heat loss for each location. There are several methods for determining the quantities of residue leaving each location.

- The mass of residue leaving each location may be measured, in which case the measured values for each location would be entered in Column 5.
- The residue at one or more locations may be measured and the quantity at the other locations calculated by difference. For example, the quantity of residue leaving the boiler may be measured by dust loading and the split of the remaining residue estimated for the other locations.
- The percent residue leaving each location may be estimated on the basis of typical results for the type of fuel being used and the method of firing. For example, for a stoker fired unit, 90% furnace bottom ash and

Copyright ASME International
Provided by IHS under license with ASME
No reproduction or networking permitted without license from IHS
Not for Resale

10% fly ash leaving the boiler may be assumed. In this case, the assumed residue split would be entered in Column 8. The larger the total residue mass rate and/or the difference in carbon in the residue at each location, the greater the uncertainty of both unburned carbon and sensible heat loss, and thus the test.

Item 1 Ash in Fuel, %. Enter percent ash in fuel.

Item 2 *HHV* Fuel, Btu/lb as-fired. Enter the higher heating value of the fuel as-fired.

Item 3 Fuel Mass Flow Rate, Klbm/h. Not required if residue split is measured or measured at all locations. When residue is measured at some locations, the total residue rate is dependent upon fuel rate. Use measured or estimated fuel rate initially. Refer to Form CMBSTNa. It will be necessary to recalculate the residue (RES) and sorbent (SRB) forms after completion of the efficiency calculations until the efficiency result converges. For efficiency calculations this is generally within 1% of the fuel rate used for the calculations. Refer to Subsection 5.7.3.

Item 5 Residue Mass Flow, Klbm/h. If residue split is estimated or measured at all locations, enter the split in Item [8]. When residue is measured at some locations, enter the measured residue mass flow rate for the applicable locations. Enter the total residue (from Item [21]) under Item [5F]. Estimate the total residue, Item [5F], initially from the sum of the sorbent flow rate plus Item [1] x Item [3]/100. For locations where residue mass flow rate was not measured, enter the estimated mass flow rate. This is calculated from the difference between the total residue mass flow rate, Item [5F], and the sum of the measured mass flow rates times the estimated split for the remaining residue locations. The column for calculated residue mass flow rate is used if the residue splits are entered in Item [8].

Item 6 C in Residue, %. Enter the free carbon (carbon corrected for CO_2) in the residue for each location.

Item 7 CO_2 in Residue, %. Required only for units using sorbent. Enter the carbon dioxide for each location.

Item 8 Residue Split, %. If the residue quantity is measured at all locations, calculate the percent residue split for each location. If the residue split is estimated, enter the assigned value in this column. Refer to Item [5].

Item 9 C Weighted Average, %. Calculate the unburned carbon in residue for each location and enter the sum under Item [9F].

Item 10 CO_2 Weighted Average, %. Calculate the carbon dioxide in refuse for each location and enter the sum under Item [10F].

A.7.1 Units Without Sorbent

Item 11 Unburned Carbon, lbm/100 lbm Fuel. Calculate the average unburned carbon. This item is used on the combustion calculation and efficiency forms.

Item 20 Total Residue, lbm/100 lbm Fuel. The total residue is the sum of the ash in fuel and unburned carbon.

A.7.2 Units With Sorbent

Enter the average carbon, C, and carbon dioxide, CO_2, in residue, Items [9F] and [10F], on Form SRBa (Items [4] and [5]) and complete the sorbent calculation forms.

Item 11 Unburned Carbon, lbm/100 lbm Fuel. Enter the calculated value from Form SRBb, Item [49].

Item 20 Total Residue, lbm/100 lbm Fuel. Enter the total residue calculated on Form SRBb, Item [50].

A.7.3 Total Residue

Item 21 Total Residue, Klbm/h. Calculate the total residue in Klbm/h. Compare Item [21] to Item [5F]. Repeat Items [5] through [21] (including sorbent forms if applicable) until Item [5F] and Item [21] are within 2%.

Item 22 Total Residue, lbm/10KBtu. Convert residue to lbm/10KBtu input from fuel basis.

A.7.4 Sensible Heat Residue Loss, %

Item 24 Enter the temperature of the residue leaving the unit for each location and calculate the enthalpy of residue for each temperature. Using the residue splits in Column 8, calculate the sensible heat of residue loss for each location.

Item 25 Sensible Heat Residue Loss, %. Enter the summation of the loss for each location.

Copyright ASME International
Provided by IHS under license with ASME
No reproduction or networking permitted without license from IHS Not for Resale

A.8 SORBENT CALCULATION SHEET — MEASURED C AND CO_2 IN RESIDUE

The sorbent calculation forms SRBa and SRBb are used to calculate sulfur capture, calcination of calcium carbonate ($CaCO_3$), unburned carbon (C), mass flow rate of spent sorbent and residue, and the calcium-to-sulfur molar ratio. These two forms are used in conjunction with the unburned carbon and residue calculation form for units with sorbent, RES. Sorbent Form SRBc is used to calculate the efficiency losses and credits related to sorbent, including losses and credits due to sorbent chemical reactions and sulfur capture. The sensible heat loss from residue, which includes spent sorbent, is calculated on Form RES.

The calculations are based upon measuring C in the residue to determine unburned carbon, and carbon dioxide (CO_2) in the residue to determine percent calcination of the $CaCO_3$ in the sorbent. As a result, the calculations on Forms SRBa and SRBb are iterative. It is necessary to estimate unburned carbon, Item [15B], and percent calcination, Item [23A], initially and reiterate until the estimated values agree within 2% of the calculated values. It will be found that these items converge readily.

Items marked with an asterisk (*) are the items that are estimated initially and results are reiterated using the last calculated values.

Items marked with a plus sign (+) are the calculation results that must be recalculated after each iteration.

The results of this form are also required for general combustion/efficiency calculations, such as for corrections to contract conditions or performance monitoring. For general combustion/efficiency calculations when the C and CO_2 in residue are not measured, enter typical values for unburned carbon, Item [15B], and calcination, Item [23A]. Typical values for sulfur capture may be used, or calculations of sulfur capture may be based on measured SO_2 and O_2 and a typical fuel analysis. For corrections to contract conditions, refer to Section 5.

A.8.1 Form SRBa

A.8.1.1 Data Required

*Item 1 — Fuel Rate, Klb/h. Initially enter the measured or estimated fuel mass flow rate. Refer to Form CMBSTNa. It will be necessary to recalculate the residue and sorbent using the RES and SRB forms after completion of the efficiency calculations until the estimated fuel flow used for these calculations agrees within 1% of the fuel flow calculated from the efficiency results. Refer to Section A.3 or Subsection 5.7.3 for convergence tolerance for different applications.

Item 2 — Sorbent Rate, Klb/h. Enter the measured sorbent mass flow rate.

+Item 3 — Sorbent/Fuel Ratio. The sorbent-to-fuel ratio (lbm sorbent/lbm fuel) is used to convert the sorbent mass flow rate to a fuel rate or input from fuel basis which is used for all calculations related to input from fuel. It is calculated by dividing Item [2] by Item [1].

Item 4 — Carbon in Residue, %. This is the weighted average of carbon in all the residue streams leaving the steam generator envelope. Enter the result calculated for Item [9F] on Form RES. For general performance calculations when the C and CO_2 in the residue are not measured, enter zero to indicate not measured.

Item 5 — CO_2 in Residue, %. This is the weighted average of carbon dioxide in all the residue streams leaving the steam generator envelope. Enter the result calculated for Item [10F] on Form RES. For general performance calculations when the C and CO_2 in the residue are not measured, enter zero to indicate not measured.

Item 6 — Moisture in Air, lbm/lbm Dry Air. Enter the moisture in air from CMBSTNa, Item [7]. This item is not required if the O_2 and SO_2 analyses are measured on a dry basis.

Items 7, 8 — Sulfur capture is calculated from O_2 and SO_2 measured at the same location. The method of measurement should be on the same basis, i.e., wet or dry. Although this is not described, if they are not on the same basis, the conversion ratio from wet to dry may be assumed to convert the constituent measured on a wet basis to a dry basis and the calculations reiterated until the assumed wet-to-dry conversion ratio agrees with the calculated ratio.

Item 7 — SO_2 Flue Gas. Enter the measured value of SO_2 in ppm in Item [7A] and convert to percent and enter in Item [7B].

Item 8 — O_2 Flue Gas at Loc SO_2, %. Enter the measured value of O_2 measured at the same location as the SO_2 above.

Item 9 — SO_2 and O_2 Basis Wet or Dry. Enter "wet" or "dry," depending upon the method of measurement for Items [7] and [8].

Copyright ASME International
Provided by IHS under license with ASME
No reproduction or networking permitted without license from IHS
Not for Resale

Item 10 Additional Moisture, lb/100 lb Fuel. Enter the total additional moisture from CMBSTNa, Item [13]. This item is not required if Items [7] and [8] are measured on a dry basis.

A.8.1.2 Combustion Products

Item 15 Ultimate Analysis, % Mass. Enter the ultimate fuel analysis. Enter the estimated value for unburned carbon, Item [15B]. Item [15C] is the carbon burned, [15A] minus [15B]. When carbon in the residue is measured, it will be necessary to repeat the calculations until the assumed unburned carbon is within 2% of the estimated value.

Items 16–18 Complete calculations as indicated. The term *K* refers to the constant in the column under the item number. These items are the same as Items [31] through [33] from Form CMBSTNb. Refer to instructions for CMBSTNb for more details.

A.8.1.3 Sorbent Products

Item 20 % Mass. Enter the sorbent analysis on a percent mass basis.

Item 21 MW. Molecular weight of the sorbent products; used for calculation of Item [22].

Item 22 Ca Mol/100 lb. Calculate the moles of calcium per 100 lbm sorbent (unshaded items) and enter the sum under Item [22I]. This item is used to calculate the calcium-to-sulfur molar ratio, Item [52].

*Item 23 Calcination Fraction. Enter the estimated calcination fraction for $CaCO_3$, Item [23A]. When CO_2 in residue is measured, it is necessary to repeat the calculations until the assumed calcination fraction is within 2% of the calculated value.

+Item 25 CO_2, lb/100 lb Sorbent. This item is the CO_2 added to the flue gas from the sorbent. Complete the calculation for the unshaded items and enter the sum under Item [25I].

Item 26 H_2O, lb/100 lb Sorbent. This item is the H_2O added to the flue gas from the sorbent. Complete the calculation for the unshaded items and enter the sum under Item [26I].

A.8.2 Form SRBb

A.8.2.1 Sulfur Capture Based on Gas Analysis

Items 30–45 Calculate sulfur capture based on SO_2 and O_2 in the flue gas. These calculations have been divided into several steps to simplify the calculation of sulfur capture when a calculator is used. For general combustion calculations, if sulfur capture is estimated or assigned a value for corrections to contract conditions, enter the assigned value under Item [45] and skip Items [30] through [40].

Items 30–33 If O_2 and SO_2 are measured on a dry basis, enter the values indicated in the "Dry" column. If measured on a wet basis, perform the calculations in the "Wet" column.

A.8.2.2 Unburned Carbon, Calcination, and Other Sorbent/Residue Calculations

+Item 47 SO_3 Formed, lb/100 lb Fuel. Calculate the SO_3 formed in the calcium oxide ($CaO + SO_3$) reaction to form $CaSO_4$ on a 100 lbm fuel basis.

+Item 48 Spent Sorbent, lb/100 lb Fuel. Calculate the mass of spent sorbent added less the CO_2 and H_2O released plus the SO_3 in the $CaO + SO_3$ sulfur capture reaction to form $CaSO_4$

+Item 49 Unburned Carbon, lb/100 lb Fuel. Calculate the unburned carbon in fuel. If carbon in residue is not measured, enter the estimated value from Item [15B].

+Item 50 Residue Rate, lb/100 lb Fuel. Calculate the total mass of residue on a 100 lbm fuel basis. Residue is the sum of the ash in the fuel, unburned carbon, and spent sorbent.

+Item 51 Calcination, lb/lb $CACO_3$. Calculate the mass fraction of $CaCO_3$ converted to CaO. If CO_2 in residue is not measured, enter the estimated value from Item [23A].

Item 52 Ca/S Molar Ratio, Mols Ca/Mol S. Calculate the calcium-to-sulfur molar ratio. This is an important operating parameter when sorbent is used for sulfur capture.

Compare the calculated unburned carbon and calcination fraction to the values estimated. Repeat the calcula-

Copyright ASME International
Provided by IHS under license with ASME
No reproduction or networking permitted without license from IHS Not for Resale

tions of Items [15] through [51] marked with a plus sign (+) until estimate is within 2% of the calculated result.

Refer to the instructions for Form RES. Enter the results of Item [50] above under Item [20] on Form RES and complete the calculations on Form RES. If the residue mass flow rate was measured for some locations and calculated by difference for the remaining locations, Item [21] on RES must be within 2% of Item [5F]. If not, repeat the residue calculations, RES Items [5] through [10], revise Items [4] and [5] on SRBa, and repeat the sorbent form calculations for the items marked with a plus sign (+) until convergence is obtained.

A.8.3 Sorbent Calculation Form SRBc — Efficiency Calculations

Calculation of efficiency losses and credits related to sorbent, including losses and credits due to sorbent chemical reactions and sulfur capture, are provided for on this form. The sensible heat loss from residue, which includes spent sorbent, is calculated on Form RES. The calculation of average exit gas temperature requires that the combustion calculation forms, CMBSTNa through CMBSTNc, be completed first. It is suggested that this form be completed after completing the input for the efficiency calculation forms.

Item 61 Sorbent Temperature, °F. Enter the temperature of the sorbent. Calculate the enthalpy of sorbent (77°F reference temperature) based on the constituents in the sorbent in accordance with Section 5. For limestone, refer to calculations at bottom of SRBc.

Item 62 Average Exit Gas Temperature (Excluding Leakage). Refer to Item [3] on efficiency calculation Form EFFa. Enter enthalpy of steam @ 1 psia (32°F reference temperature) under Item [62A], which is the same as Item [3b] on Form EFFa.

Item 63 *HHV* Fuel, Btu/lbm as fired. Enter the higher heating value of fuel as fired.

Item 65 Water from Sorbent Loss, MKBtu/h. Calculate water from sorbent loss and enter result on Form EFFb, Item [59], in Column A (MKB).

Items 71–77 Losses from Calcination/Dehydration, MKBtu/h. Calculate the losses for the individual constituents in the sorbent and enter the sum under Item [77] and on Form EFFb, Item [58], in Column A (MKB).

Item 80 Credit Due to Sulfation, % fuel input. Calculate credit due to sulfation and enter result on Form EFFb, Item [66], in Column B (%).

Item 85 Credit Due to Sensible Heat from Sorbent, MKBtu/h. Calculate credit due to sensible heat from sorbent and enter result on Form EFFb, Item [73], in Column A (MKB).

A.9 OUTPUT — INSTRUCTIONS FOR FORM OUTPUT

This form is used to calculate unit output. The form consists of two parts. The first portion deals with the calculation of output from the main steam or high-pressure side of the boiler. Provision is made for calculation of superheater spray flow by energy balance if the flow is not measured. For units with reheat, the second portion of the form deals with the calculation of reheat steam flow and reheat output. For units with two stages of reheat, the calculations for the second stage are similar to the first reheat stage except reheat-2 flow is calculated by subtracting the reheat-2 extraction and turbine seal flow and shaft leakage from the sum of the cold reheat-1 flow plus reheat-1 spray water flow.

Enter all applicable measured flows, temperatures and pressures in the lightly shaded blocks. Determine the enthalpy for each applicable parameter and enter in Column H. For the applicable high-pressure parameters, calculate the absorption, Q, with respect to the entering feedwater.

A.9.1 High-Pressure Steam Output

Item 1 Feedwater. The steam mass flow throughput is determined from either measured feedwater flow or measured steam flow with feedwater flow usually having the lowest uncertainty. When SH spray water is supplied from the feedwater, for purposes of accounting in these instructions, the feedwater flow in Item [1] should not include SH spray water flow.

Item 2 SH Spray Water. When SH spray water is supplied from feedwater, enter the flow, pressure, and temperature. The flow may be calculated by energy balance. Refer to Items [3] through [8]. Note that when the spray water temperature is lower than the feedwater temperature, the energy with respect to the feedwater, Q, is nega-

Copyright ASME International
Provided by IHS under license with ASME
No reproduction or networking permitted without license from IHS Not for Resale

tive. This item is not applicable to units where the spray water is from a sweet water condenser internal to the steam generator envelope.

Items 3–8 These items are used to calculate SH spray water by energy balance. If SH spray is not measured, enter the applicable data and perform the calculations.

Items 9–14 Internal Extraction Flows. These are steam/water extraction flows internal to the steam generator and are considered as part of the boiler output. These items are provided to calculate main steam flow from feedwater flow (or feedwater flow from main steam flow); therefore, only the flows are required to calculate output. Provision for entering temperature and pressure is provided should the user desire to calculate the absorption related to these items.

Items 15–17 Auxiliary Extraction Flows. These are steam extraction flows that are considered as part of the boiler output and are in addition to the output from main steam calculated in Item [18].

Item 18 Main Steam. When feedwater flow is measured, main steam flow is the sum of the feedwater flow and SH spray water flow less the blowdown flow, internal extraction flows, and miscellaneous auxiliary extraction flows.

Item 19 High-Pressure Steam Output. The high-pressure steam output is the sum of the energy in the main steam, internal extraction flows, miscellaneous auxiliary extractions, and energy added to the superheater spray water. Note that the term for the latter, *Q2*, is negative due to the method of accounting in Item [2].

A.9.2 Units with Reheat

Item 20 Reheat Outlet. Enter the reheat outlet temperature and pressure and calculate the enthalpy.

Item 21 Cold Reheat Entering Desuperheater. Enter the temperature and pressure upstream of the reheat desuperheater and calculate the enthalpy.

Item 22 RH Spray Water. Enter the spray water flow, temperature, and pressure, and calculate the enthalpy. It is recommended the flow be measured rather than calculated by energy balance due to the difficulty of obtaining a representative temperature downstream of the desuperheater.

Item 23 Cold Reheat Extraction Flow. Enter any extraction flows between the point where main steam flow (Item [18], Column W) was determined and the reheat desuperheater inlet in addition to feedwater heater extraction flow(s) and turbine seal flow and shaft leakages. This flow would normally be an additional measured flow.

Item 24 Turbine Seal Flow and Shaft Leakage. This item is normally estimated from the manufacturer's turbine heat balances or turbine test data.

Items 25–29 FW Heater No. 1. The highest pressure feedwater heater is considered to be the No. 1 FW heater. Enter the feedwater flow, temperatures, and pressures indicated, and calculate enthalpy. The steam extraction flow is calculated by energy balance in Item [29].

Items 30–34 FW Heater No. 2. Applicable for units where the second point heater extraction is from the cold reheat (usually first point heater supplied from intermediate high-pressure turbine extraction point). Enter the feedwater flow and temperatures and pressures indicated, and calculate enthalpy. The steam extraction flow is calculated by energy balance in Item [34].

Item 35 Cold Reheat Flow. The cold reheat flow is calculated from the main steam flow less the feedwater heater extraction flow(s), turbine seal flow and shaft leakages, and any other miscellaneous extraction flows.

Item 36 Reheat Output. The reheat output is the sum of the energy added to the cold reheat flow and the energy added to the reheater spray water flow

Item 37 Total Output. Total output is the sum of the high-pressure steam output plus the reheat steam output. Note that if there is a second stage of reheat, the output for the second stage must be calculated by following the same principles as for the first stage reheater and added to the total output above.

Copyright ASME International
Provided by IHS under license with ASME
No reproduction or networking permitted without license from IHS
Not for Resale

A.10 DATA REDUCTION WORK SHEETS — INSTRUCTIONS FOR DATA FORMS

A.10.1 Form PREC, Precision Data Reduction Work Sheet

This form is used to average each data point with respect to time and calculate the standard deviation for use in determining the precision component of uncertainty. This form is also used to average each data point within a sampling grid before the average for the grid is determined. One of these forms needs to be completed for each measured parameter.

Item 1	Enter each data reading for a single data point in the first column. This may be an analog value or a digital value, such as millivolts. If the value in Column 1 is a digital value, convert it to an analog value in Column 2. If the instrument has a calibration factor, enter this in Column 3 and calculate the calibrated value and enter in Column 4.
Item 2	Calculate the average value for the test period.
Item 3	Calculate the standard deviation for this data point as indicated. Refer to Subsection 5.2.4.1 for information on standard deviation.

A.10.2 Form BIAS — Bias Data Reduction Work Sheet

This data sheet is used to account for and calculate the bias limit for each measurement device, which includes all the instrument components required for the measurement. Therefore, if pressures are read by two different qualities of pressure transducers or some thermocouples are read with an automated voltmeter and others read with a hand-held potentiometer, more than one data sheet would be required for both pressure and temperature. Refer to Section 4 for suggestions on what should be considered and typical values.

Item 1	List all of the potential sources of bias error. For spatially nonuniform parameters, such as temperature grids in large ducts, include the spatial distribution index to account for the finite coverage of the grid.
Items 2, 3	Enter agreed upon values for both positive and negative bias. Two columns are provided for each positive and negative bias. The bias may be entered as a percent of the reading or in the same units as the measured parameter. Note that the units must be the same as the units for the average value of the measured parameter. For spatially nonuniform parameters, enter the result of the spatial distribution index, Item [43], on Form INTAVG.
Items 2A,2B, 3A,3B	Calculate the total positive and negative bias limit and enter the result.

A.11 UNCERTAINTY CALCULATIONS — INSTRUCTIONS FOR UNCERTAINTY WORK SHEET FORMS

The uncertainty work sheet forms are used to calculate overall test uncertainty. These forms can be used to estimate pretest uncertainty or to calculate the as-tested uncertainty. All other calculation forms should be completed before the uncertainty calculations are performed. The user should refer to Section 5 of the Code for details on the uncertainty calculation procedures. The user should refer to Sections 4 and 7 of the Code for details on uncertainty analysis as well as guidance on determining precision and bias errors for measured parameters.

A.11.1 Form UNCERTa — Uncertainty Work Sheet No. 1

Two similar work sheets have been provided, one for output and one for efficiency. Each work sheet form contains the input information for data reduction and information required for determination of the precision component of uncertainty. As noted on the form, this work sheet is set up for spatially uniform parameters, i.e., parameters which vary with time only. Form INTAVG should be completed first for spatially nonuniform parameters to obtain input for this form.

Items a–z	Measured Parameters. These items should include all parameters which are measured and/or estimated for use in calculating output or efficiency (or any other calculated result such as fuel flow).
Item 1	Average Value. Enter the average value of each measured parameter from Form PREC, Item [2], or Form INTAVG, Item [40].
Item 2	Standard Deviation. Enter the standard deviation of each measured parameter from Form PREC, Item [3].

Copyright ASME International
Provided by IHS under license with ASME
No reproduction or networking permitted without license from IHS
Not for Resale

BIAS Sheet Number — Enter the BIAS Sheet Number. The same BIAS data can often be used for measured parameters using similar instrumentation.

Item 3 — Total Positive BIAS Limit. Enter the applicable positive bias information from the BIAS work sheet.

Item 4 — Total Negative BIAS Limit. Enter the applicable negative bias information from the BIAS work sheet.

Item 5 — Number of Readings. Enter the number of times each parameter was measured during the test period.

Item 6 — Calculate the precision index for each measured parameter in accordance with the equation. If Form INTAVG was used, enter the result from Item [41].

Item 7 — Degrees of Freedom. The degrees of freedom for each measured parameter is one less than the number of readings. If Form INTAVG was used, enter the result from Item [42].

Item 8 — Percent Change. Enter the percent change in the average value of each measured parameter. The recommended percent change is 1.0% (1.01).

Item 9 — Incremental Change. Calculate the incremental change for each measured parameter in accordance with the equation. If the average value of the measured parameter is zero, enter any small incremental change. It is important that the incremental change be in the same units as the average value.

A.11.2 Form UNCERTb — Uncertainty Work Sheet No. 2

Two similar work sheets are provided, one for output and one for efficiency. Each work sheet form contains the information required to calculate total uncertainty. The nomenclature used on these work sheets refers to output and efficiency; however, the sheet can be used for any calculated item such as fuel flow, calcium/sulfur ratio, etc.

Items a–z — Measured Parameters. These items should include all parameters which are measured and/or estimated for use in calculating efficiency (or any other calculated result such as output). These parameters should correspond to the items on Form UNCERTa.

Item 10 — Recalculated Efficiency. Enter the recalculated efficiency (or other calculated item such as output) based on the incremental change in the measured parameter from Item [7]. The average value of all other measured parameters should not change during the recalculation for each measured parameter.

Item 11 — Absolute Sensitivity Coefficient. Calculate the absolute sensitivity coefficient in accordance with the equation.

Item 12 — Relative Sensitivity Coefficient. Calculate the relative sensitivity coefficient in accordance with the equation.

Item 13 — Precision Index of Result Calculation. Enter the product of Items [11] and [6].

Item 14 — Overall Degrees of Freedom Contribution. Calculate the numerator of Eq. (5.16-5) in accordance with the equation.

Item 15 — Positive Bias Limit of Result. Calculate the positive bias limit of result using the equation shown. This converts the percentage bias numbers to the measured units for each measured parameter.

Item 16 — Negative Bias Limit of Result. Calculate the negative bias limit of result using the equation shown. This converts the percentage bias numbers to the measured units for each measured parameter.

Item 20 — Base Output or Efficiency. Enter Item [37] from Form OUTPUT or Item [80] from Form EFFb, calculated with the average value of all measured parameters.

Item 21 — Precision Index of Result. Calculate the precision index of the result in accordance with the equation.

Item 22 — Overall Degrees of Freedom. Calculate the overall degrees of freedom in accordance with the equation.

Item 23 — Student's t-Value. Enter the Student's t-value determined from Table 5.16-1 in the Code.

Item 24 — Precision Component of Uncertainty. Calculate the precision component of uncertainty in accordance with the equation.

Items 25, 26 — Positive and Negative Bias Limit of Result. Calculate in accordance with the equation for each item.

Items 27, 28 — Total Positive and Negative Uncertainty. Calculate the final positive and negative uncertainty result in accordance with the equation for each item.

Copyright ASME International
Provided by IHS under license with ASME
No reproduction or networking permitted without license from IHS
Not for Resale

A.11.3 Form INTAVG, Uncertainty Work Sheet No. 3 — Spatially Nonuniform Parameters

This work sheet form contains the input information required for the data reduction of each grid point as well as the information required for determination of the precision component of uncertainty and the spatial distribution index for spatially nonuniform parameters. This includes any parameter which varies with both space and time such as the temperature in a large duct. On large units, there may be more than one flue or duct, such as two or more air heater gas outlets. This sheet should be filled out for each flue or duct and the average result of each flue or duct then averaged together. Refer to Section 5.13 for considerations regarding averaging multiple ducts. This form is set up for averaging using the multiple midpoint rule for the integrated average. Refer to Section 5 for other types of integrated averaging.

Item 30 Number of Points Wide. Enter the number of grid points in the horizontal (X) direction.

Item 31 Number of Points High. Enter the number of grid points in the vertical (Y) direction.

Item 32 Number of Points Total. Enter the total number of grid points.

Item 33 Number of Readings per Point. Enter the number of measurement readings recorded at each grid point from Form PREC.

Item 34 Degrees of Freedom per Point. The degrees of freedom per point is one less than the number of readings.

Grid Point Identify each grid point location.

Item 35 Average Value. Enter the average value with respect to time for each grid point from Form PREC.

Item 36 Standard Deviation. Enter the standard deviation with respect to time for each grid point from Form PREC.

Item 37 Precision Index. Calculate the precision index for each grid point in accordance with the equation.

Item 38 Degrees of Freedom Calculation. Calculate a component of the degrees of freedom equation for each grid point in accordance with the equation.

Item 39 Spatial Distribution Index Calculation. Calculate a component of the spatial distribution index in accordance with the equation.

Item 40 Average Value of Grid. Calculate the average value of the grid measurement in accordance with the equation.

Item 41 Precision Index of Grid. Calculate the precision index of the grid in accordance with the calculation.

Item 42 Degrees of Freedom for Grid. Calculate the degrees of freedom for the grid in accordance with the equation.

Item 43 Spatial Distribution Index for Grid. Calculate the spatial distribution index for the grid in accordance with the equation. Include the result with the biases on Form BIAS.

Item 44 Bias for Integrated Average. Enter the bias based on the method used for determining the integrated average. Refer to Sections 5 and 7 of the Code.

Item 45 Bias for No Flow Weighting. Enter the agreed upon bias if no flow weighting is used.

Item 46 Bias for Thermocouple Type. Enter the appropriate bias based on the type of instrumentation used to measure the temperature.

Item 47 Estimated System Bias. Enter the estimated system bias. A value of 0.1% of the average is recommended.

Item 48 Estimated Total Bias of Grid. Calculate the total bias of the grid from Items [44] through [47].

After this form is completed, Items [40] through [42] and [48] should be entered on Form UNCERTa, Items [1], [6], [7], and [3] and [4], respectively, and treated the same as spatially uniform parameters starting with Item [8]. For units with more than one duct per measured parameter, the parameter, precision index, and spatial distribution must be averaged and that result entered on Form UNCERTa. Refer to Section 5.13 regarding air and gas temperatures.

Copyright ASME International
Provided by IHS under license with ASME
No reproduction or networking permitted without license from IHS Not for Resale

FORM EFFa EFFICIENCY CALCULATIONS
Data Required

	TEMPERATURES, F				
1	Reference Temperature	77	1A	Enthalpy Water (32 F Ref)	45
2	Average Entering Air Temp from CMBSTNa [16] or EFFa [44]		2A	Enthalpy Dry Air	
			2B	Enthalpy Water Vapor	
3	Average Exit Gas T (Excl Lkg) from CMBSTNa [15] or EFFa [51]		3A	Enthalpy Dry Gas	
			3B	Enthalpy Steam @ 1 PSIA	
			3C	Enthalpy Water Vapor	
4	Fuel Temperature		4A	Enthalpy Fuel	
	HOT AIR QUALITY CONTROL EQUIPMENT				
5	Entering Gas Temperature		5A	Enthalpy Wet Gas	
6	Leaving Gas Temperature		6A	Enthalpy of Wet Gas	
			6B	Enthalpy of Wet Air	
			6C	Enthalpy of Wet Air @ T = [3]	
	RESULTS FROM COMBUSTION CALCULATION FORM CMBSTN				
10	Dry Gas Weight [77]		18	Unburned Carbon, % [2]	
11	Dry Air Weight [69]		19	HHV Btu/lbm as-fired [1]	
12	Water from H2 Fuel [34E]			**HOT AQC EQUIPMENT**	
13	Water from H2O Fuel [34F]		20	Wet Gas Entering [75E]	
14	Water from H2Ov Fuel [34G]		21	H2O in Wet Gas, % [76E]	
15	Moisture in Air lb/lb DA [7]		22	Wet Gas Leaving [75L]	
16	Moisture in Air lb/10KB [72]		23	Residue in Wet Gas, % [81E]	
17	Fuel Rate Est. Klb/hr [3]				
			25	Excess Air, % [60]	
	MISCELLANEOUS				
30	Unit Output, MKBtu/hr		31	Aux Equip Power, MKBtu/hr	
32	Loss Due to Surface Radiation and Convection, %				
33A	Flat Projected Surface Area, ft2		33C	Average Surface Temperature, F	
33B	Average Velocity of Air Near Surface, ft/sec		33D	Average Ambient Temperature Near Surface, F	
	ENT AIR TEMP (Units with primary and secondary air flow)			**Item Nos. CMBSTN**	
35A	Pri Air Temp Entering, F CMBSTNa [16B]		35B	Enthalpy Wet Air, Btu/lb	
36A	Pri Air Temp Leaving Air Htr, F CMBSTNa [51]		36B	Enthalpy Wet Air, Btu/lb	
37A	Average Air Temp Entering Pulverizers, F		37B	Enthalpy Wet Air, Btu/lbm	
38A	Average Pulverizer Tempering Air Temp, F		38B	Enthalpy Wet Air, Btu/lbm	
39	Sec Air Temp Entering, F CMBSTNa [16A]		40	Primary Airflow (Ent Pulv), Klb/hr	
41	Pulverizer Tempering Airflow, Klb/hr	[40] × ([36B] – [37B])/([36B] – [38B])			
42	Total Airflow, Klb/hr Form CMBSTNc [96]		43	Secondary Airflow, Klb/hr [42] – [40]	
44	Average Entering Air Temperature, F	([35A] × ([40] – [41]) + [39] × [43] + [38A] × [41])/[42]			
	GAS FLOW ENT PRI AH AND AVG EXIT GAS TEMP (Units with primary and secondary AH's)				
45A	Flue Gas Temp Ent Pri AH, F CMBSTNb [50]		45B	Enthalpy Wet Flue Gas, Btu/lbm	
46A	Flue Gas Temp Lvg Pri AH, F CMBSTNc [88]		46B	Enthalpy Wet Flue Gas, Btu/lbm	
47	Flue Gas Temp Lvg Sec AH, F CMBSTNc [88]		48	Total Gas Ent Air Htrs, Klb/hr CMBSTNc [93]	
49	Flue Gas Flow Ent Pri Air Htr, Klb/hr	[40] × ([37B] – [35B])/([45B] – [46B])			
50	Flue Gas Flow Ent Sec Air Htr, Klb/hr [48] – [49]				
51	Average Exit Gas Temperature, F	([46A] × [49] + [47] × [50])/[48]			
	Iteration of flue gas split, % primary AH flow Initial Estimate			Calculated	

NAME OF PLANT ASME PTC 4 MASTER FORM	UNIT NO.
TEST NO. DATE	LOAD
TIME START: END:	CALC BY
	DATE
	SHEET OF

Copyright ASME International
Provided by IHS under license with ASME
No reproduction or networking permitted without license from IHS
Not for Resale

FORM EFFb EFFICIENCY CALCULATIONS

	LOSSES, % Enter Calculated Result in % Column [B]	A MKB	B %
60	Dry Gas [10] × [3A] / 100 × / 100		
61	Water from H2 Fuel [12] × ([3B] – [1A]) / 100 × (– 45) / 100		
62	Water from H2O Fuel [13] × ([3B] – [1A]) / 100 × (– 45) / 100		
63	Water from H2Ov Fuel [14] × [3C] / 100 × / 100		
64	Moisture in Air [16] × [3C] / 100 × / 100		
65	Unburned Carbon in Ref [18] × 14500 / [19] = × 14500 /		
66	Sensible Heat of Refuse – from Form RES		
67	Hot AQC Equip ([20] × ([5A] – [6A]) – ([22] – [20]) × ([6B] – [6C])) / 100 (× (–) – (–) × (–)) / 100		
68	Other Losses, % Basis – from Form EFFc Item [110]		
69	Summation of Losses, % Basis		
	LOSSES, MKBtu/hr Enter in MKB Column [A]		
75	Surface Radiation and Convection – from Form EFFa Item [32]		
76	Sorbent Calcination/Dehydration – from Form SRBc Item [77]		
77	Water from Sorbent – from Form SRBc Item [65]		
78			
79			
80	Other Losses, MKBtu/hr Basis – from Form EFFc Item [111]		
81	Summation of Losses, MKBtu/hr Basis		
	CREDITS, % Enter Calculation Result in % Column [B]		
85	Entering Dry Air [11] × [2A] / 100 × / 100		
86	Moisture in Air [16] × [2B] / 100 × / 100		
87	Sensible Heat in Fuel 100 × [4A] / [19] 100 × /		
88	Sulfation – from Form SRBc Item [80]		
89	Other Credits, % Basis – from Form EFFc Item [112]		
90	Summation of Credits, % Basis		
	CREDITS, MKBtu/hr Enter Calculated Result in MKB Column [A]		
95	Auxiliary Equipment Power [31]		
96	Sensible Heat from Sorbent – from Form SRBc Item [85]		
97	Other Credits, MKBtu/hr Basis – from Form EFFc Item [113]		
98	Summation of Credits, MKBtu/hr Basis		
100	Fuel Eff, % (100 – [69] + [90]) × [30] / ([30] + [81] – [98]) (100 – +) × / (– +)		
101	Input from Fuel, MKB 100 × [30] / [100] = 100 × /		
102	Fuel Rate, Klbm/hr 1000 × [101] / [19] = 1000 × /		

NAME OF PLANT ASME PTC 4 MASTER FORM	UNIT NO.
TEST NO. DATE	LOAD
TIME START: END:	CALC BY
	DATE
	SHEET OF

Copyright ASME International
Provided by IHS under license with ASME
No reproduction or networking permitted without license from IHS Not for Resale

FORM EFFc EFFICIENCY CALCULATIONS
Other Losses and Credits

The losses and credits listed on this sheet are not universally applicable to all fossil fired steam generators and are usually minor. Losses/credits that have not been specifically identified by this Code but are applicable in accordance with the intent of the Code should also be recorded on this sheet.
Parties to the test may agree to estimate the losses or credits in lieu of testing. Enter a 'T' for tested or 'E' for estimated in the second column, and result in appropriate column. Enter the sum of each group on Form EFFb.
Refer to the text of PTC 4 for the calculation method.

Itm	T or E	LOSSES, % Enter Calculated Result in % Column [B]	A MKB	B %
110A		CO in Flue Gas		
110B		Formation of NOx		
110C		Pulverizer Rejects		
110D		Air Infiltration		
110E		Unburned Hydrocarbons in Flue Gas		
110F				
110G				
110		Summation of Other Losses, % Basis		
		LOSSES, MKBtu/hr Enter in MKB Column [A]		
111A		Wet Ash Pit		
111B		Sensible Heat in Recycle Streams — Solid		
111C		Sensible Heat in Recycle Streams — Gas		
111D		Additional Moisture		
111E		Cooling Water		
111F		Air Preheater Coil (supplied by unit)		
111G				
111		Summation of Other Losses, MKBtu/hr Basis		
		CREDITS, % Enter Calculation Result in % Column [B]		
112A				
112		Summation of Credits, % Basis		
		CREDITS, MKBtu/hr Enter Result in MKB Column [A]		
113A		Heat in Additional Moisture (external to envelope)		
113B				
113		Summation of Credits, MKBtu/hr Basis		

NAME OF PLANT ASME PTC 4 MASTER FORM	UNIT NO.
TEST NO. DATE	LOAD
TIME START: END:	CALC BY
	DATE
	SHEET OF

Copyright ASME International
Provided by IHS under license with ASME
No reproduction or networking permitted without license from IHS
Not for Resale

FORM CMBSTNa COMBUSTION CALCULATIONS

	DATA REQUIRED				
1	HHV — Higher Heating Value of Fuel, Btu/lbm as fired				
2	UBC — Unburned Carbon, lbm/100 lbm fuel from RES or SRBb Form				
3	Fuel Flow, Klbm/hr [4b]				
4	a. Measured Fuel Flow				
4	b. Calculated Fuel Flow 100,000 × [5] / [6] / [1]				
5	Output, MKBtu/hr from OUTPUT Item [37]				
6	Fuel Efficiency, % (estimate initially)				
7	Moisture in air, lbm/lbm Dry Air				
8	Barometric Pressure, in Hg pwva =				
9	Dry Bulb Temperature, F pswvd =				
10	Wet Bulb Temperature, F pswvw =				
11	Relative Humidity, % pwva =				
	Additional Moisture (Measured)	Klbm/hr			
	Atomizing Steam from OUTPUT Item [14]				
	Sootblowing Steam from OUTPUT Item [11]				
	Other				
12	Summation Additional Moisture				
13	Additional Moisture, lbm/100 lbm Fuel 100 × [12] / [3]				
14	Additional Moisture, lbm/10 KBtu [13] / ([1] / 100)				
	If Air Heater (Excl Stm/Wtr Coil) Enter following				
15	Gas Temp Lvg AH, F Primary / Secondary or Main	15B		15A	
16	Air Temp Ent AH, F Primary / Secondary or Main	16B		16A	
17	O2 Entering Air Heater Primary / Secondary or Main	17B		17A	
18	O2 Leaving Air Heater Primary / Secondary or Main	18B		18A	
18C	Pri air to gas/Sec air to gas leakage split for Trisector Type AH			18C	
	Fuel Analysis, % Mass as fired — Enter in Col [30]				
19	Mass Ash, lbm/10KBtu 100 × [30J] / [1]				
	If mass of ash (Item [19]) exceeds 0.15 lbm/10KBtu or Sorbent				
	utilized, Enter Mass Fraction of Refuse in Col [79] for each location				
	SORBENT DATA (Enter 0 if Sorbent not Used)				
20	Sorbent Rate, Klbm/hr				
21	CO2 from Sorbent, lbm/100 lbm Sorb	from SRBa Item [25I]			
22	H2O from Sorbent, lbm/100 lbm Sorb	from SRBa Item [26I]			
23	Sulfur Capture, lbm/lbm Sulfur	from SRBb Item [45]			
24	Spent Sorbent, lbm/100 lbm fuel	from SRBb Item [48]			
25	Sorb/Fuel Ratio, lbm Sorb/lbm Fuel	[20] / [3]			

NAME OF PLANT ASME PTC 4 MASTER FORM	UNIT NO.
TEST NO. DATE	LOAD
TIME START: END:	CALC BY
	DATE
	SHEET OF

Copyright ASME International
Provided by IHS under license with ASME
No reproduction or networking permitted without license from IHS Not for Resale

FORM CMBSTNb COMBUSTION CALCULATIONS

COMBUSTION PRODUCTS													
30	Ultimate Analysis % Mass			31	Theo Air F lbm/100 lbm Fuel [30] x K		32	Dry Prod F Mol/100 lbm Fuel [30] / K		33	Wet Prod F Mol/100 lbm Fuel [30] / K		34	H2O Fuel lbm/10KB [30] x K/([1]/100)	
A	C														
B	UBC														
C	Cb				11.51			12.011							
D	S				4.31			32.066							
E	H2				34.29						2.016			8.937	
F	H2O										18.015			1.0	
G	H2Ov										18.015			1.0	
H	N2							28.013							
I	O2				-4.32										
J	ASH														
K	VM														
L	FC														
M	TOTAL			31			32			33			34		

35	Total Theo Air Fuel Check, lb/10KB	([31M] + [30B] x 11.51) / ([1] / 100)	

CORRECTIONS FOR SORBENT REACTIONS AND SULFUR CAPTURE			
40	CO2 from Sor lb/100 lb fuel	[21] x [25]	
41	H2O from Sor lb/100 lb fuel	[22] x [25]	
42	SO2 Reductio Mol/100 lb fuel	[32D] x [23]	
43	Dry Prod Com Mol/100 lb fuel	[32M] + [40] / 44.01 – [42]	
44	Wet Prod Co Mol/100 lb fuel	[33M] + [41] / 18.016 + [43]	
46	Theo Air Corr, lb/100 lb fuel	[31M] + 2.16 x [30D] x [23]	
47	Theo Air Corr, Mol/100 lb fuel	[46] / 28.966	
48	Theo Air Corr, lb/10KBtu	[46] / ([1]/100)	
49	Wet Gas from Fuel, lb/10KBtu	(100 – [30J] – [30B] – [30D] x [23])/([1]/100)	

LOCATION		Pri AH In	Pri AH Out	Sec AH IN	Sec AH Out
50	Flue Gas Temperature Entering Air Heater, F				
51	Air Temperature Leaving Air Heater, F				
52	Flue Gas Oxygen Content, %				
	From EFFa Items [17A], [17B], [18A], and [18B]				

FLUE GAS ANALYSIS, Mol/100 lb Fuel		Dry	Wet				
53	Moisture in Air	0	[7] x 1.608				
54	Dry/Wet Products Comb	[43]	[44]				
55	Additional Moisture	0	[13]/18.015				
56	[47] x (0.7905 + [53])						
57	Summation [54] + [55] + [56]						
58	20.95 – [50] x (1 + [53])						
60	Excess Air, % 100 x [50] x [57] / [47] / [58]						

NAME OF PLANT ASME PTC 4 MASTER FORM	UNIT NO.
TEST NO. DATE	LOAD
TIME START: END:	CALC BY
	DATE
	SHEET OF

Copyright ASME International
Provided by IHS under license with ASME
No reproduction or networking permitted without license from IHS
Not for Resale

FORM CMBSTNc GENERAL COMBUSTION CALCULATIONS

	LOCATION				Pri AH In	Pri AH Out	Sec AH In	Sec AH Out
60	Excess Air, %							
	O2, CO2, SO2, WHEN EXCESS AIR KNOWN							
61								
62	Dry [47] × (0.7905 + [60]/100)							
63	Wet [47] × (0.7905 + [53] + (1 + [53]) × [60]/100)							
64	Dry Gas, Mol/100 lb Fuel [43] + [62]							
65	Wet Gas, Mol/100 lb Fuel [44] + [63]							
			Dry	Wet				
66	O2, % [60] × [47] × 0.2095/		[64]	[65]				
67	CO2, % ([30C]/.1201 + [40]/.4401)/		[64]	[65]				
68	SO2, % (1 – [23]) × [30D]/.32064/		[64]	[65]				
	FLUE GAS PRODUCTS, lbm/10KBtu							
69	Dry Air	(1 + [60]/100) × [48]						
70	Wet Gas from Fuel	[49]						
71	CO2 from Sorbent	[40]/([1]/100)						
72	Moisture in Air	[7] × [69]						
73	Water from Sorbent	[41]/([1]/100)						
74	Additional Moisture	[14]						
75	Total Wet Gas	[69] + [70] + [71] + [72] + [73] + [74]						
76	H2O in Wet Gas	[34M] + [72] + [73] + [74]						
77	Dry Gas	[75] – [76]						
78	H2O in Wet Gas, % Mass 100 × [76]/[75]							
79	Residue, lb/lb Total Refuse at each location							
80	Residue, lb/10KBtu ([30J] + [2] + [24])/([1]/100)							
81	Residue in Wet Gas, lb/lb Wet Gas [79] × [80]/[75]							
82	Leakage, % Gas Entering 100 × ([75L] – [75E])/[75E]							
	GAS TEMPERATURE CORRECTION FOR AH LEAKAGE							
83	Gas Temp Lvg (INCL LKG), F [15]							
84	Air Temp Ent, F [16]							
85	H Air Lvg, Btu/lbm	T = [83], H2O = [7]						
86	H Air Ent, Btu/lbm	T = [84], H2O = [7]						
87	Cpg, Btu/lbm F	T = [83], H2O = [78E], RES = [81E]						
88	Corrected AH Gas Outlet Temperature [83] + ([82]/100 × ([85] – [86])/[87])							
	AIR, GAS, FUEL & RESIDUE MASS FLOW RATES, Klbm/hr							
90	Input from Fuel from Efficiency Form, Million Btu/hr							
91	Fuel Rate, Klb/hr	1000 × [90]/[1]						
92	Residue Rate, Klb/hr	[80] × [90]/10						
93	Wet Flue Gas, Klb/hr	[75] × [90]/10						
95	Excess Air Lvg Blr, %	As Applicable from [60]						
96	Total Air to Blr, Klbm/hr	(1 + [95]/100) × (1 + [7]) × [48] × [90]/10						

NAME OF PLANT ASME PTC 4 MASTER FORM	UNIT NO.
TEST NO. DATE	LOAD
TIME START: END:	CALC BY
	DATE
	SHEET OF

Copyright ASME International
Provided by IHS under license with ASME
No reproduction or networking permitted without license from IHS Not for Resale

FORM GAS GASEOUS FUELS

1 Fuel Type

	2 Ultimate Analysis % by Volume	3 Density of Const. lb/cu ft	4 Density of Gas [2] x [3] lb/100 cu ft	5 HHV of Const. Btu/lbm	6 HHV of Gas [2] x [5] Btu/lbm	7 C K x [2] mol/100 mol Gas	8 H2 K x [2] mol/100 mol Gas	9 O2 K x [2] mol/100 mol Gas	10 N2 K x [2] mol/100 mol Gas	11 S K x [2] mol/100 mol Gas	12 H2Ov K x [2] mol/100 mol Gas
CH4		0.0423		1010.0		1	2				
C2H2		0.0686		1474.3		2	1				
C2H4		0.0739		1599.8		2	2				
C2H6		0.0792		1769.6		2	3				
C3H6		0.1109		2333.0		3	3				
C3H8		0.1162		2516.1		3	4				
C4H8		0.1479		3079.9		4	4				
C4H10		0.1532		3257.1		4	5				
C5H12		0.1901		4003.0		5	6				
C6H6		0.2058		3741.8		6	3				
C6H14		0.2271		4747.0		6	7				
C7H8		0.2428		4475.0		7	4				
C8H10		0.2798		5212.0		8	5				
C10H8		0.3749		7742.9		10	4				
N2		0.0738		0.0					1		
NH3		0.0449		434.3			1.5		0.5		
CO		0.0738		320.5		1		0.5			
CO2		0.1160		0.0		1		1			
SO2		0.1688		0.0				1		1	
H2		0.0053		324.2			1				
H2S		0.0898		637.1			1			1	
H2Ov		0.0475		0.0							1
O2		0.0843		0.0				1			
13 TOTAL											

14	MW, lbm/mole		12.01	2.016	32.00	28.02	32.06	18.02
15	Mass, lbm/100 moles	[13] x [14]						
16	Summation Line [16]							
17	Analysis, % Mass	100 x [15]/[16]						

18	Density at 60°F and 30 in. Hg	lbm/cu ft	[4]/100	
19	Higher Heating Value,	Btu/cu ft	[6]/100	
20	Higher Heating Value,	Btu/lbm	[18]/[19]	

NAME OF PLANT ASME PTC 4 MASTER FORM	UNIT NO.
TEST NO. DATE	LOAD
TIME START: END:	CALC BY
	DATE
	SHEET OF

Copyright ASME International
Provided by IHS under license with ASME
No reproduction or networking permitted without license from IHS
Not for Resale

FORM RES UNBURNED CARBON & RESIDUE CALCULATIONS

DATA REQUIRED FOR RESIDUE SPLIT

1	Ash in Fuel, %	from Form CMBSTNb [30J]		2	HHV Fuel, Btu/lb as fired from Form CMBSTNa [1]
3	Fuel Mass Flow Rate, Klbm/hr	from Form CMBSTNa [4b]			

a Item [3] — Use measured or estimated value initially. (See CMBSTNa)
Recalculate after boiler efficiency has been calculated until estimated value is within 1% of calculated value
b Residue splits estimated — Enter value in Col [8] and calculate Col [5]
Residue rate measured — Enter measured mass flow rates in Col [5]. When residue not measured at all locations, estimate split and flow for measured locations. Reiterate until estimated total residue is withn 2% of calculated.
c Enter the % free carbon in Col [6] (total carbon correcter for CO2). Units with sorbent — Enter the % CO2 in Col [7].

	Location	5 Residue Mass Flow Input Klbm/hr	5 Residue Mass Flow Calculated Klbm/hr	6 C in Residue %	7 CO2 in Residue %	8 Residue Split % Input	8 Residue Split % Calculated 100 × [5]/[5F]	9 C Wtd Ave % [6] × [8]/100	10 CO2 Wtd Ave % [7] × [8]/000
A	Furnace								
B	Econ								
C	Precipitator								
D									
E									
F	TOTAL	5				8		9	10

UNITS WITHOUT SORBENT

11	Unburned Carbon,	lbm/100 lbm Fuel	[1] × [9F]/(100 – [9F])	0.000
20	Total Residue,	lbm/100 lbm Fuel	[1] + [11]	0.00

UNITS WITH SORBENT

d Enter average C and CO2 in residue, [9F] & [10F] above or SRBa (Items [4] & [5]) and complete Sorbent Calculation Forms.

11	Unburned Carbon,	lbm/100 lbm Fuel	from Form SRBb Item [49]	
20	Total Residue,	lbm/100 lbm Fuel	from Form SRBb Item [50]	

TOTAL RESIDUE

21	Total Residue,	Klbm/hr	[20] × [3]/100	

e When all residue collection locations are measured, the measured residue split is used for calculations. If a portion of the residue mass is estimated, repeat calculation above until Col [5F] and Item [21] agree within 2%.

22	Total Residue, lbm/10KBtu	100 × [20]/[2]	

23 SENSIBLE HEAT RESIDUE LOSS, %

	Location	24 Temp Residue	[8], % × [22], lbm/10KBtu × H Residue, Btu/lbm /1000	Loss %
A	Furnace		× × /10000	
B	Econ		× × /10000	
C	Precipitator		× × /10000	
D			× × /10000	
E			× × /10000	
			Total 25	

H residue = 0.16 × T + 1.09E – 4 × T^2 – 2.843E – 8 × T^3 – 12.95

NAME OF PLANT ASME PTC 4 MASTER FORM	UNIT NO.
TEST NO. DATE	LOAD
TIME START: END:	CALC BY
	DATE
	SHEET OF

Copyright ASME International
Provided by IHS under license with ASME
No reproduction or networking permitted without license from IHS
Not for Resale

FORM SRBa SORBENT CALCULATION SHEET
Measured C and CO2 in Residue

	DATA REQUIRED							
1	Fuel Rate, Klbm/hr frm CMBSTNa [4b]	*		4	Carbon in Residue, % from Form RES [9F]			
2	Sorbent Rate, Klbm/hr frm CMBSTNa [20]			5	CO2 in Residue, % from Form RES [10F]			
3	Sorb/Fuel Ratio [2]/[1]	+		6	Moisture in Air, lb/lb Dry Air frm CMBSTNa [7]			
7	SO2 Flue Gas, ppm	7A			[7A]/10,000 %	7B		
8	O2 Flue Gas @ Loc SO2, %			9	SO2 & O2 Basis Wet(1) or Dry(0)			
10	Additional Moisture, lb/100 lb Fuel (CMBSTNa, Item [13])							

Item [1] — Use measured or estimated value initially. Recalculate after boiler efficiency has been calculated until estimated value is within 1% of calc.
Enter fuel analysis in Col [15].
Enter sorbent analysis in Col [20].
* Estimate Unburned Carbon [15B], and Calcination [23A] initially. Reiterate until estimated value is within 2% of calculated value.
\+ Items that must be recalculated for each iteration.

COMBUSTION PRODUCTS

	15 Unimate Analysis % Mass from CMBSTNb [30]			16 Theo Air F lbm/100 lbm Fuel [15] x K		17 Dry Prod F Mol/100 lbm Fuel [15]/K		18 Wet Prod F Mol/100 lbm Fuel [15]/K	
A	C								
B	UBC		*						
C	Cb		+	11.51	+	12.011	+		
D	S			4.31		32.066			
E	H2			34.29				2.016	
F	H2O							18.015	
G	H2Ov							18.015	
H	N2					28.013			
I	O2			−4.32	(−)				
J	ASH								
K									
L									
M	TOTAL			16 +		17 +		18	

SORBENT PRODUCTS

		20 % Mass	21 MW	22 Ca Mol/100 lb [20]/[21]	23 Calcination Fraction	24 MW	25 CO2 lb/100 lb Sorb [22] x [23] x [24]	26 H2O lb/100 lb Sorb [22] x [23] x [24]
A	CaCO3		100.087		*	44.011	+	
B	Ca(OH)2		74.093		1.0	18.015		
C	MgCO3		84.314		1.0	44.011		
D	Mg(OH)2		58.320		1.0	18.015		
E	H2O		18.015		1.0	18.015		
F	INERT							
G								
H								
I	TOTAL Ca, Mol/100 lb Sorb					TOTAL	+	

NAME OF PLANT ASME PTC 4 MASTER FORM	UNIT NO.
TEST NO. DATE	LOAD
TIME START: END:	CALC BY
	DATE
	SHEET OF

Copyright ASME International
Provided by IHS under license with ASME
No reproduction or networking permitted without license from IHS
Not for Resale

FORM SRBb SORBENT CALCULATION SHEET
Measured C and CO2 in Residue

	SULFUR CAPTURE BASED ON GAS ANALYSIS					
	Select Column per Item [9]			Dry	Wet	Dry
30	Moisture in Air	Mols/Mol DA		0.0	[6] x 1.608	
31	Additional Moisture			0.0	[10]/18.015	
32	Products Combustion Fuel			[17M]	[17M] + [18M]	+
33	H2O Sorb	[3] x [26I]/18.016		0.0	Calc	
34	CO2 Sorb	[3] x [25I]/44.01				+
35		(0.7905 + [30]) x [16M]/28.963				+
36	Summation	[31] thru [35]				+
37	1.0 – (1.0 + [30]) x [8]/20.95					
38	(0.7905 + [30]) x 2.387 – 1.0					
39	[7B] x [36]/[17D]/[37]					+
40	[38] x [7B]/[37]					
45	Sulfur Capture, lb/lb Sulfur		(100 – [39])/(100 + [40])			+
	UNBURNED CARBON, CALCINATION AND OTHER SORBENT/RESIDUE CALCULATIONS					
47	SO3 Formed,	lb/100 lb Fuel	[45] x [17D] x 80.064			+
48	Spent Sorbent,	lb/100 lb Fuel	[47] + (100 – [25I] – [26I]) x [3]			+
49	Unburned Carbon,	lb/100 lb Fuel	([48] + [15J]) x [4]/(100 – [4])			+
50	Residue Rate,	lb/100 lb Fuel	[49] + [48] + [15J]			+
51	Calcination,	lb/lb CaCO3	1 – [50] x [5] x 0.0227/[20A]/[3]			+
52	Ca/S Molar Ratio,	Mols Ca/Mol S	[3] x [22I] x 32.0646/[15D]			

Compare the following, reiterate if initial estimate not within 2% calculated

		Initial Est	Calculated
Unburned Carbon,	lb/100 lb Fuel	[15B]	[49]
Calcination,	Mol CO2/Mol CaCO3	[23A]	[51]

Enter result of Item [50] on Form RES, Item [20].

If residue mass flow rate not measured at all locations, recalculate RES and SRBa and SRBb until convergence on refuse rate of 2%.

NAME OF PLANT ASME PTC 4 MASTER FORM	UNIT NO.
TEST NO. DATE	LOAD
TIME START: END:	CALC BY
	DATE
	SHEET OF

Copyright ASME International
Provided by IHS under license with ASME
No reproduction or networking permitted without license from IHS
Not for Resale

FORM SRBc SORBENT CALCULATION SHEET
Efficiency

	DATA REQUIRED				
60	Reference Temperature, F	77	60A	Enthalpy Water (32 F Ref)	45
61	Sorbent Temperature, F		61A	Enthalpy Sorbent (77 F Ref)	
62	Ave Exit Gas Temp (Excl Lkg)		62A	Enthalpy Steam @ 1 PSIA	
63	HHV Fuel, Btu/lbm as fired				

LOSSES MKBtu/hr

65	Water from Sorbent	[2] × [26I] × ([62A] – [60A])/100000 × × (–)/100000	

Calcination/Dehydration

71	CaCO3	[20A]	×	[23A]	×	[2]	×	0.00766	=	0.00	×	0.00	×	0.00766	
72	Ca(OH)2	[20B]	×	1.0	×	[2]	×	0.00636	=	0.00	×	1.0	×	0.00	×	0.00636	
73	MgCO3	[20C]	×	1.0	×	[2]	×	0.00652	=	0.00	×	1.0	×	0.00	×	0.00652	
74	Mg(OH)2	[20D]	×	1.0	×	[2]	×	0.00625	=	0.00	×	1.0	×	0.00	×	0.00625	
75																	
76																	
77	Summation of Losses Due to Calcination/Dehydration									SUM [71] – [76]							

CREDITS, %

80	Sulfation	6733 × [45] × [15D] / [63] 6733 × × /

CREDITS, MKBtu/hr

85	Sensible Heat from Sorbent	[2] × [61A] / 1000 × / 1000

Enthalpy of Limestone — See text for other sorbents

HCACO3 = [61] × (0.179 + 0.1128E – 3 × [61]) – 14.45
× (0.179 + 0.1128E – 3 ×) – 14.45

[61A] = (1 – [20E] / 100) × HCACO3 + [20E] × ([61] – 77) / 100
= (1 – / 100) × + × (– 77) / 100

NAME OF PLANT ASME PTC 4 MASTER FORM	UNIT NO.
TEST NO. DATE	LOAD
TIME START: END:	CALC BY
	DATE
	SHEET OF

Copyright ASME International
Provided by IHS under license with ASME
No reproduction or networking permitted without license from IHS
Not for Resale

FORM OUTPUT

	PARAMETER	W FLOW Klbm/hr	T TEMPERATURE F	P PRESSURE PSIG	H ENTHALPY Btu/lbm	Q ABSORPTION MKBtu/hr Wx(H-H1)/1000
1	FEEDWATER (Excluding SH Spray)					
2	SH SPRAY WATER					
3	Ent SH-1 Attempt					
4	Lvg SH-1 Attempt					
5	SH-1 Spray Water Flow		W3 × (H3 – H4)/(H4 – H2) or W4 × (H3 – H4)/(H3 – H2)			
6	Ent SH-2 Attempt					
7	Lvg SH-2 Attempt					
8	SH-2 Spray Water Flow		W6 × (H6 – H7)/(H7 – H2) or W7 × (H6 – H7)/(H6 – H2)			
	INTERNAL EXTRACTION FLOWS					
9	Blowdown					
10	Sat Steam Extraction					
11	Sootblowing Steam					
12	SH Steam Extraction 1					
13	SH Steam Extraction 2					
14	Atomizing Steam					
	AUXILIARY EXTRACTION FLOWS					
15	Aux Steam 1					
16	Aux Steam 2					
17						
18	MAIN STEAM					
19	HIGH PRESS STEAM OUTPUT	Q18 + Q2 + Q9 through Q17				
	REHEAT UNITS					
20	REHEAT OUTLET					
21	COLD REHEAT ENT ATTEMPERATOR					
22	RH SPRAY WATER					
23	COLD REHEAT EXTRACTION FLOW					
24	TURB SEAL FLOW & SHAFT LKG					
	FW HEATER NO. 1					
25	FW Entering					
26	FW Leaving					
27	Extraction Steam					
28	Drain					
29	FW HEATER NO. 1 FLOW		W25 × (H26 – H25)/(H27 – H28)			
	FW HEATER NO. 2					
30	FW Entering					
31	FW Leaving					
32	Extraction Steam					
33	Drain					
34	FW HEATER NO. 2 FLOW		W30 × [(H31 – H30) – W29 × (H28 – H33)]/(H32 – H33)			
35	COLD REHEAT FLOW		W18 – W23 – W24 – W29 – W34			
36	REHEAT OUTPUT	W35 × (H20 – H21) + W22 × (H20 – H22)				
37	TOTAL OUTPUT	Q19 + Q36				

NAME OF PLANT ASME PTC 4 MASTER FORM	UNIT NO.
TEST NO. DATE	LOAD
TIME START: END:	CALC BY
	DATE
	SHEET OF

Copyright ASME International
Provided by IHS under license with ASME
No reproduction or networking permitted without license from IHS Not for Resale

FORM PREC PRECISION DATA REDUCTION WORKSHEET

	Measured Parameter:			
1	Measured Data	Conversion to English Units	Correction Factor	Calibrated Data
a				
b				
c				
d				
e				
f				
g				
h				
i				
j				
k				
l				
m				
n				
o				
p				
q				
r				
s				
t				
u				
v				
w				
x				
y				
z				
2	Average Value	([1a] + [1b] + [1c] + . . . [1z])/z		
3	Standard Deviation			
	((1/(z − 1)) × (([1a] − [2])^2 + ([1b] − [2])^2 + . . . + ([1z] − [2])^2))^(1/2)			

NAME OF PLANT ASME PTC 4 MASTER FORM	UNIT NO.
TEST NO. DATE	LOAD
TIME START: END:	CALC BY
	DATE
	SHEET OF

Copyright ASME International
Provided by IHS under license with ASME
No reproduction or networking permitted without license from IHS Not for Resale

FORM BIAS BIAS DATA REDUCTION WORKSHEET

Measured Parameter:					Worksheet No:	
Estimate of Bias Limit						
1 Measured Parameter Individual Biases		Source of Bias Limit	2 Positive Percent*	Positive Unit of Meas	3 Negative Percent*	Negative Unit of Meas
a						
b						
c						
d						
e						
f						
g						
h						
i						
j						
k						
l						
m						
n						
o						
Total Bias Limit (a^2 + b^2 + c^2 + . . .)^(1/2)			2A	2B	3A	3B

* This is a percent of reading

NAME OF PLANT ASME PTC 4 MASTER FORM	UNIT NO.
TEST NO. DATE	LOAD
TIME START: END:	CALC BY
	DATE
	SHEET OF

Copyright ASME International
Provided by IHS under license with ASME
No reproduction or networking permitted without license from IHS Not for Resale

FORM UNCERTa OUTPUT — UNCERTAINTY WORK SHEET NO. 1

	Measured Parameter (from DATA)	1 Average Value (Item [2] on PREC form)	2 Standard Deviation (Item [3] on PREC form)	Bias Sheet No.	3 Total Positive Bias Limit (Item [2] on BIAS form) %	Unit	4 Total Negative Bias Limit (Item [2] on BIAS form) %	Unit	5 No. of Readings (Item [1] on PREC form)	6 Precision Index (([2]^2)/[5])^1/2	7 Degrees of Freedom [5] – 1	8 Percent Change	9 Incremental Change* [8] × [1]/100
a													
b													
c													
d													
e													
f													
g													
h													
i													
j													
k													
l													
m													
n													
o													
p													
q													
r													
s													
t													
u													
v													
w													
x													
y													
z													

(Continued)

Copyright ASME International
Provided by IHS under license with ASME
No reproduction or networking permitted without license from IHS Not for Resale

STD.ASME PTC 4-ENGL 1998 ■ 0759670 0615134 199 ■

FORM UNCERTa OUTPUT — UNCERTAINTY WORK SHEET NO. 1 (CONT'D)

	Measured Parameter (from DATA)	1 Average Value (Item [2] on PREC form)	2 Standard Deviation (Item [3] on PREC form)	Bias Sheet No.	3 Total Positive Bias Limit (Item [2] on BIAS form) %	Unit	4 Total Negative Bias Limit (Item [2] on BIAS form) %	Unit	5 No. of Readings (Item [1] on PREC form)	6 Precision Index (([2]^2)/[5])^1/2	7 Degrees of Freedom [5] − 1	8 Percent Change	9 Incremental Change* [8] × [1]/100
aa													
ab													
ab													

This work sheet is set up for constant value parameters.
See Section 5.2 of the Code for calculation of average value, degrees of freedom, and precision index for integrated average value parameters.

* The value used for incremental change can be any increment of the average value.
The recommended increment is 1.0% (0.01 times the average value).
If the average value of the measured parameter is zero, use any small incremental change.
It is important to note that the incremental change must be in the same units as the average value.

NAME OF PLANT ASME PTC 4 MASTER FORM	UNIT NO.
TEST NO. DATE	LOAD
TIME START: END:	CALC BY
	DATE
	SHEET OF

Copyright ASME International
Provided by IHS under license with ASME
No reproduction or networking permitted without license from IHS
Not for Resale

Copyright ASME International
Provided by IHS under license with ASME
No reproduction or networking permitted without license from IHS

FORM UNCERTb OUTPUT — UNCERTAINTY WORK SHEET NO. 2

	Measured Parameter	10 Recalc Output *	11 Absolute Sensitivity Coefficient ([10] – [20])/[9]	12 Relative Sensitivity Coefficient [11] × [1]/[20]	13 Precision Index of Result Calculation [11] × [6]	14 Overall Deg of Freedom Contribution ([11] × [6])^4/[7]	15 Positive Bias Limit of Result (([1] × [2A]/100)^2 + [2B]^2)^1/2 × [11]	16 Negative Bias Limit of Result (([1] × [3A]/100)^2 + [3B]^2)^1/2 × [11]
a								
b								
c								
d								
e								
f								
g								
h								
i								
j								
k								
l								
m								
n								
o								
p								
q								
r								
s								
t								
u								
v								
w								
x								
y								
z								
aa								
ab								
ab								

* This uncertainty work sheet is set up for calculating the uncertainty effect on efficiency; however, this sheet can be used for any calculated item such as output, fuel flow, calcium/sulfur ratio, etc.

20	* Base Output	from Item [80] on EFFb form
21	Precision Index of Result	([13a]^2 + [13b]^2 + ...)^1/2
22	Overall Degrees of Freedom	[21]^4/([14a] + [14b] + ...)
23	Student *t* Value	from Table 5.16-1 in Code
24	Precision Component of Uncertainty	[21] × [23]
25	Positive Bias Limit of Result	([15a]^2 + [15b]^2 + ...)^1/2
26	Negative Bias Limit of Result	([16a]^2 + [16b]^2 + ...)^1/2
27	Positive Total Uncertainty	([24]^2 + [25]^2)^1/2
28	Negative Total Uncertainty	([24]^2 + [26]^2)^1/2

NAME OF PLANT ASME PTC 4 MASTER FORM	UNIT NO.
TEST NO. DATE	LOAD
TIME START: END:	CALC BY
	DATE
	SHEET OF

Not for Resale

FORM UNCERTa EFFICIENCY — UNCERTAINTY WORK SHEET NO. 1

	Measured Parameter (from DATA)	1 Average Value (Item [2] on PREC form)	2 Standard Deviation (Item [3] on PREC form)	Bias Sheet No.	3 Total Positive Bias Limit (Item [2] on BIAS form) %	Unit	4 Total Negative Bias Limit (Item [2] on BIAS form) %	Unit	5 No. of Readings (Item [1] on PREC form)	6 Precision Index (([2]^2)/[5])^1/2	7 Degrees of Freedom [5] – 1	8 Percent Change	9 Incremental Change* [8] x [1]/100
a													
b													
c													
d													
e													
f													
g													
h													
i													
j													
k													
l													
m													
n													
o													
p													
q													
r													
s													
t													
u													
v													
w													
x													
y													
z													
aa													
ab													
ab													

This work sheet is set up for constant value parameters. See Section 5.2 of the code for calculation of average value, degrees of freedom, and precision index for integrated average value parameters.

* The value used for incremental change can be any increment of the average value. The recommended increment is 1.0% (0.01 times the average value). If the average value of the measured parameter is zero, use any small incremental change. It is important to note that the incremental change must be in the same units as the average value.

NAME OF PLANT ASME PTC 4 MASTER FORM UNIT NO.

TEST NO. DATE LOAD

TIME START: END: CALC BY

DATE

SHEET OF

Copyright ASME International
Provided by IHS under license with ASME
No reproduction or networking permitted without license from IHS
Not for Resale

FORM UNCERTb EFFICIENCY — UNCERTAINTY WORK SHEET NO. 2

	Measured Parameter	10 Recalc Output *	11 Absolute Sensitivity Coefficient ([10] – [20])/[9]	12 Relative Sensitivity Coefficient [11] × [1]/[20]	13 Precision Index of Result Calculation [11] × [6]	14 Overall Deg of Freedom Contribution ([11] × [6])^4/[7]	15 Positive Bias Limit of Result (([1] × [2A]/100)^2 + [2B]^2)^1/2 × [11]	16 Negative Bias Limit of Result (([1] × [3A]/100)^2 + [3B]^2)^1/2 × [11]
a								
b								
c								
d								
e								
f								
g								
h								
i								
j								
k								
l								
m								
n								
o								
p								
q								
r								
s								
t								
u								
v								
w								
x								
y								
z								
aa								
ab								
ab								

* This uncertainty work sheet is set up for calculating the uncertainty effect on efficiency; however, this sheet can be used for any calculated item such as output, fuel flow, calcium/sulfur ratio, etc.

20	* Base Efficiency	from Item [80] on EFFb form
21	Precision Index of Result	([13a]^2 + [13b]^2 + ...)^1/2
22	Overall Degrees of Freedom	[21]^4/([14a] + [14b] + ...)
23	Student *t* Value	from Table 5.16-1 in Code
24	Precision Component of Uncertainty	[21] × [23]
25	Positive Bias Limit of Result	([15a]^2 + [15b]^2 + ...)^1/2
26	Negative Bias Limit of Result	([16a]^2 + [16b]^2 + ...)^1/2
27	Positive Total Uncertainty	([24]^2 + [25]^2)^1/2
28	Negative Total Uncertainty	([24]^2 + [26]^2)^1/2

NAME OF PLANT ASME PTC 4 MASTER FORM

TEST NO. DATE

TIME START: END:

UNIT NO.

LOAD

CALC BY

DATE

SHEET OF

Copyright ASME International
Provided by IHS under license with ASME
No reproduction or networking permitted without license from IHS

Not for Resale

FORM INTAVG UNCERTAINTY WORK SHEET
Integrated Average Value Parameters

	Grid Location:	
30	No. of Points Wide	
31	No. of Points High	
32	No. of Points Total [30] x [31]	
33	No. of Readings Per Point	
34	Degrees of Freedom Per Point [33] – 1	

	Grid Point X, Y	35 Average Value	36 Standard Deviation	37 Precision Index ([36]^2/[33])^1/2	38A Degrees of Freedom Per Point	38B Degrees of Freedom Calculation [37]^4/([32]^4*[38A])	39 Spatial Distribution Index Calculation [35] – [40]
a							
b							
c							
d							
e							
f							
g							
h							
i							
j							
k							
l							
m							
n							
o							
p							
q							
r							
s							
t							
u							
v							
w							
x							
y							
z							

40	Average Value of Grid	([35a] + [35b] + ...)/[32]	
41	Precision Index of Grid	([37a]^2 + [37b]^2 + ...)^1/2)/[32]	
42	Degrees of Freedom of Grid	[41]^4/([38a] + [38b] + ...)	
43	Spatial Distribution Index		
44	Bias for Integrated Average		
45	Bias for No Flow Weighting		
46	Bias for Thermocouple Type		
47	Estimated System Bias (0.1% of average)		
48	Estimated Total Bias for Grid	([44]^2 + [45]^2 + [46]^2 + [47]^2.)^1/2	

NAME OF PLANT ASME PTC 4 MASTER FORM	UNIT NO.
TEST NO. DATE	LOAD
TIME START: END:	CALC BY
	DATE
	SHEET OF

Copyright ASME International
Provided by IHS under license with ASME
No reproduction or networking permitted without license from IHS Not for Resale

NONMANDATORY APPENDIX B
SAMPLE CALCULATIONS

This Appendix presents examples which demonstrate the calculation methods outlined or recommended in this Code. The calculations in this Appendix focus primarily on uncertainty calculations. The efficiency and output calculations are discussed in Section 5 and Appendix A — Calculation Forms. This Appendix includes the following example problems:

- B.1 Temperature Measurement
- B.2 Pressure Measurement
- B.3 Flow Measurement
- B.4 Output Calculation
- B.5 Coal Fired Steam Generator
- B.6 Oil Fired Steam Generator

The sample calculations presented in Sections B.1 through B.4 are building blocks for the coal fired steam generator example in Section B.5. The first three sections illustrate temperature, pressure, and flow measurements for feedwater to the steam generator.

In order to emphasize that bias limits must be assigned by knowledgeable parties to a test, bias limits used in the following examples do not always agree with the potential values listed in Section 4.

B.1 TEMPERATURE MEASUREMENT

This example illustrates how feedwater temperature can be measured and the uncertainty determined. Figure B.1-1 shows the temperature measuring system. The following temperatures were recorded during the test: 440°F, 440°F, 439°F, 439°F, 440°F, and 439°F.

The average value and standard deviation for these six measurements were 439.5°F and 0.55°F, respectively. The Precision Data Reduction Work Sheet provided with this Code can be used to perform this calculation or the procedures presented in Section 5 can be followed. A completed Precision Data Reduction Work Sheet for feedwater temperature is shown in Table B.1-1. The standard deviation is required as part of the overall precision error calculation shown in Section B.4.

The bias error for this measurement is determined by evaluating the measurement system shown on Figure B.1-1. Subsection 4.4.2 of the Code was reviewed to determine possible bias errors. The following individual bias errors were evaluated for this example:

- thermocouple type
- calibration
- lead wires
- ice bath
- thermowell location
- stratification of fluid flow
- ambient conditions at junctions
- intermediate junctions
- electrical noise
- conductivity
- drift

Section 4 of this Code provides additional bias errors which could be applicable for a temperature measurement. Several of the above bias errors may not be applicable for a particular temperature measurement. As this example illustrates, most of the above bias errors are very small and can be ignored.

The Bias Data Reduction Work Sheet provided with this Code can be used to summarize the bias errors and calculate the overall bias error for this measurement. A completed Bias Data Reduction Work Sheet for water temperature is shown in Table B.1-2.

The feedwater temperature was measured with a standard grade Type E thermocouple. This thermocouple has a bias error of ±3°F. This value is determined from published manufacturers' accuracy data. The bias error for the lead wire is assumed to be ±1.0°F based on engineering judgment and experience from similar measurement systems. Depending on the location and fluid stratification where the temperature is measured, there can be a bias error. The ambient conditions at the thermocouple and junction boxes were assumed to have no effect on the measurement. In addition, electrical noise and conductivity were assumed to have a negligible effect. The thermocouple was not recalibrated after the test, so a drift of 0.1°F was assumed.

Copyright ASME International
Provided by IHS under license with ASME
No reproduction or networking permitted without license from IHS

Not for Resale

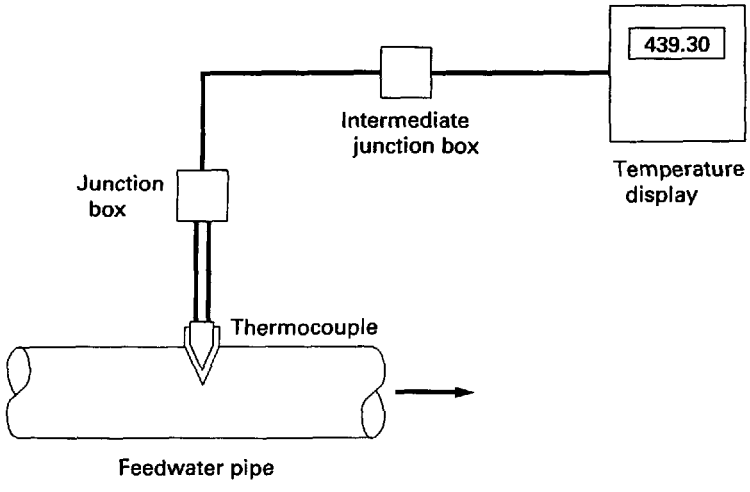

FIG. B.1-1 TEMPERATURE MEASUREMENT

Based on the above bias errors, the overall bias error of the feedwater temperature was calculated to be ±3.16°F.

It should be noted that there are a number of ways to reduce the bias error of this example, including post-test calibration or using a premium grade thermocouple.

B.2 PRESSURE MEASUREMENT

This example illustrates how feedwater pressure can be measured and the uncertainty determined. Figure B.2-1 shows the pressure measuring system. The following pressures were recorded during the test: 1,672; 1,674; 1,668; 1,678; and 1,691 psig.

The average value and standard deviation for these five measurements were 1,676.6 and 8.82 psig, respectively. The Precision Data Reduction Work Sheet provided with this Code can be used to perform this calculation or the procedures presented in Section 5 can be followed. A completed Precision Data Reduction Work Sheet for feedwater pressure is shown in Table B.2-1. The standard deviation is required as part of the overall precision error calculation shown in Section B.4.

The bias error for this measurement is determined by evaluating the measurement system shown on Figure B.2-1. Subsection 4.5.2 of the Code was reviewed to determine possible bias errors. The following individual bias errors were evaluated for this example:

- transmitter
- calibration
- location
- ambient conditions at transmitter
- ambient conditions at junctions
- electrical noise
- drift
- static and atmospheric pressure

Section 4 of this Code provides additional bias errors which could be applicable for a pressure measurement. Several of the above bias errors may not be applicable for a particular pressure measurement. As this example illustrates, several of the above bias errors are very small and could be ignored.

The Bias Data Reduction Work Sheet, provided with this Code, can be used to summarize the bias errors and calculate the overall bias error for this measurement. A completed Bias Data Reduction Work Sheet for feedwater pressure is shown in Table B.2-2.

The feedwater pressure was measured with a standard transmitter. This transmitter has a span of 800 to 2,400 psig and a bias error of ±1% for reference accuracy. This value is determined from published manufacturers' accuracy data. The transmitter was calibrated prior to the test which included corrections for static pressure and ambient pressure. Depending on the location where the pressure is measured, there could be a bias error; however, this problem assumed the location effect was negligible.

Published manufacturers' data were also used to determine the drift and ambient temperature effects. This bias of 9.6 psi was based on ±1% of maximum scale per 100°F. In addition, electrical noise was assumed to have a negligible effect. The transmitter was

Copyright ASME International
Provided by IHS under license with ASME
No reproduction or networking permitted without license from IHS
Not for Resale

TABLE B.1-1
FEEDWATER TEMPERATURE PRECISION DATA REDUCTION WORK SHEET

Measured Parameter:	FEEDWATER TEMPERATURE, F			
1	Measured Data	Conversion to English Units	Correction Factor	Calibrated Data
a	440.00			
b	440.00			
c	439.00			
d	439.00			
e	440.00			
f	439.00			
g				
h				
i				
j				
k				
l				
m				
n				
o				
p				
q				
r				
s				
t				
u				
v				
w				
x				
y				
z				
2	Average Value	([1a] + [1b] + [1c] + . . . [1z])/z		439.50
3	Standard Deviation			0.5477
((1/(z − 1)) × (([1a] − [2])^2 + ([1b] − [2])^2 + . . . + ([1z] − [2])^2))^(1/2)				

NAME OF PLANT	ASME PTC 4 Example Problems B.1 AND B.5	UNIT NO.	
TEST NO.	DATE	LOAD	
TIME START:	END:	CALC BY	
		DATE	
		SHEET	OF

Copyright ASME International
Provided by IHS under license with ASME
No reproduction or networking permitted without license from IHS
Not for Resale

TABLE B.1-2
FEEDWATER TEMPERATURE BIAS DATA REDUCTION WORK SHEET

Measured Parameter:	Water Temperature, F	Work Sheet No: 1D			
Estimate of Bias Limit					
1 Measured Parameter Individual Biases		Source of Bias Limit	2 Positive Percent*	2 Positive Unit of Meas	3 Negative Percent*	3 Negative Unit of Meas
a	TC or RTD type	Manufacturers Data		3.00		3.00
b	Calibration	Included in Item a		0.00		0.00
c	Lead Wires	Engineering judgment		1.00		1.00
d	Ice bath	Negligible		0.00		0.00
e	Thermowell location/geometry	Negligible		0.00		0.00
f	Pad weld (insulated/uninsulated)	Not Applicable		0.00		0.00
g	Stratification of flowing liquid	Negligible		0.00		0.00
h	Ambient conditions at junction	Negligible		0.00		0.00
i	Ambient conditions of thermocouple	Negligible		0.00		0.00
j	Intermediate junctions	Negligible		0.00		0.00
k	Electrical noise	Negligible		0.00		0.00
l	Conductivity	Negligible		0.00		0.00
m	Drift	Engineering judgment		0.10		0.10
n						
o						
Total Bias Limit (a^2 + b^2 + c^2 + . . .) ^ (1/2)			2A 0.00	2B 3.16	3A 0.00	3B 3.16

* This is a percent of reading

NAME OF PLANT	ASME PTC 4 EXAMPLE PROBLEMS B.1 AND B.5	UNIT NO.
TEST NO.	DATE	LOAD
TIME START:	END:	CALC BY
		DATE
		SHEET OF

Copyright ASME International
Provided by IHS under license with ASME
No reproduction or networking permitted without license from IHS
Not for Resale

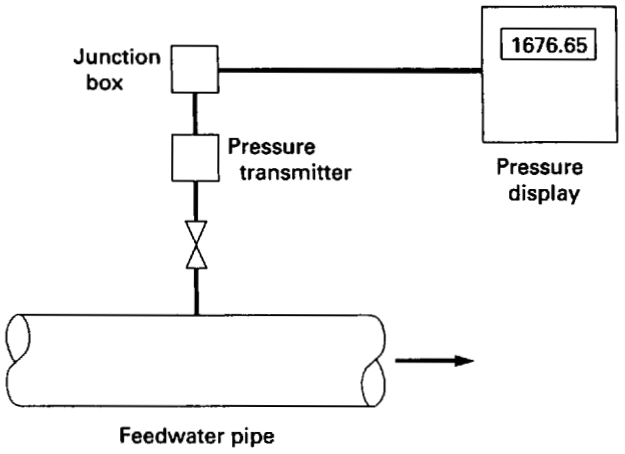

FIG. B.2-1 PRESSURE MEASUREMENT

not recalibrated after the test so a drift of 2 psi, based on 0.25% of maximum scale per 6 months, was used.

Based on the above bias errors, the overall bias error of the feedwater pressure was calculated to be ±1% and 9.81 psi.

It should be noted that there are a number of ways to reduce the bias error of this example, including using a more accurate measurement device.

B.3 FLOW MEASUREMENT

This example illustrates how feedwater flow can be measured and the uncertainty determined. Figure B.3-1 shows the flow measuring system. The following flows were recorded during the test: 437.0, 437.1, 433.96, 428.7, 461.9, 428.3, 434.8, 438.28, 431.2, 427.5, 426.93, 430.3, 424.6, 435.2, 431.48, 425.9, 438.7, 427.5, 434.43, and 441.7 Klb/h.

The average value and standard deviation for these 20 measurements were 433,774 and 8,191.39 lb/h, respectively. The Precision Data Reduction Work Sheet provided with this Code can be used to perform this calculation or the procedures presented in Section 5 can be followed. A completed Precision Data Reduction Work Sheet for feedwater flow is shown in Table B.3-1. The standard deviation is required as part of the overall precision error calculation shown in Section B.4.

The bias error for this measurement is determined by evaluating the measurement system shown on Figure B.3-1. Subsection 4.7.2 of the Code was reviewed to determine possible bias errors. The following individual bias errors were evaluated for this example:

- calibration of primary element
- stratification
- temperature bias
- pressure bias
- installation
- condition of nozzle
- nozzle thermal expansion
- pressure correction (density effect)
- temperature correction (density effect)
- Reynolds number correction
- measurement location

Section 4 of this Code provides additional bias errors which could be applicable for a flow measurement. Several of the above bias errors may not be applicable for a particular flow measurement. As this example illustrates, several of the above bias errors are very small and can be ignored.

The Bias Data Reduction Work Sheet, provided with this Code, can be used to summarize the bias errors and calculate the overall bias error for this measurement. A completed Bias Data Reduction Work Sheet for feedwater flow is shown in Table B.3-2.

The feedwater flow was measured with a calibrated flow nozzle with pipe taps. The nozzle was inspected prior to the test. This type of nozzle has a bias error of ±0.4%. The test was run at a flow with a Reynolds number similar to the laboratory calibration results; therefore, the bias is considered negligible. The nozzle is provided with flow straighteners, so the stratification and installation effects are considered negligible. The nozzle was not inspected after the test, so a bias error of ±0.5% was assigned. The differential pressure transmitter bias is ±0.12% based on an accuracy of ±0.25%. The feedwater pressure bias was determined to be 9.81 psi, but has a negligible impact on feedwater density. The feedwater temperature bias was determined to have a bias of ±3.16°F, which has an impact of ±0.27% on feedwater density for an uncertainty ±0.14% measured feedwater flow. There is a bias of ±0.10% due to thermal expansion and a measurement system bias of ±0.10% was assigned.

Based on the above bias errors, the overall bias error of the feedwater flow was calculated to be ±0.68%.

It should be noted that there are a number of ways to reduce the bias error of this example, including a more accurate measurement device.

B.4 OUTPUT CALCULATION

The purpose of this example is to illustrate how steam generator output is calculated and the uncertainty of the result determined. This Code recommends that

Copyright ASME International
Provided by IHS under license with ASME
No reproduction or networking permitted without license from IHS Not for Resale

TABLE B.2-1
FEEDWATER PRESSURE PRECISION DATA REDUCTION WORK SHEET

Measured Parameter:	FEEDWATER PRESSURE, psig			
1	Measured Data	Conversion to English Units	Correction Factor	Calibrated Data
a	1672.00			
b	1674.00			
c	1668.00			
d	1678.00			
e	1691.00			
f				
g				
h				
i				
j				
k				
l				
m				
n				
o				
p				
q				
r				
s				
t				
u				
v				
w				
x				
y				
z				
2	Average Value	([1a] + [1b] + [1c] + . . . [1z])/z		1676.60
3	Standard Deviation			8.8204

{(1/(z − 1)) × (([1a] − [2])^2 + ([1b] − [2])^2 + . . . + ([1z] − [2])^2)}^(1/2)

NAME OF PLANT	ASME PTC 4 EXAMPLE PROBLEMS B.2 AND B.5	UNIT NO.	
TEST NO.	DATE	LOAD	
TIME START:	END:	CALC BY	
		DATE	
		SHEET	OF

Copyright ASME International
Provided by IHS under license with ASME
No reproduction or networking permitted without license from IHS
Not for Resale

TABLE B.2-2
FEEDWATER PRESSURE BIAS DATA REDUCTION WORK SHEET

Measured Parameter:	Feedwater Pressure, psig	Work Sheet No: 2A

Estimate of Bias Limit

1	Measured Parameter Individual Biases	Source of Bias Limit	2 Positive		3 Negative	
			Percent*	Unit of Meas	Percent*	Unit of Meas
a	Gauge, Manomtr or Transmitter Type	Manufacturers Data	1.00		1.00	
b	Calibration	Included in Item 1a				
c	Tap location/geometry/flow impact	Negligible				
d	Amb conditions at transmitter	Manufacturers data		1.00		1.00
e	Amb conditions at junction	Negligible				
f	Electrical noise	Negligible				
g	Drift	Manufacturers data		2.00		2.00
h	Static and atmospheric pressure	Included in calibration				
i						
j						
k						
l						
m						
n						
o						

Total Bias Limit (a^2 + b^2 + c^2 + . . .) ^ (1/2)	2A	2B	3A	3B
	1.00	2.24	1.00	2.24

* This is a percent of reading

NAME OF PLANT	ASME PTC 4 EXAMPLE PROBLEMS B.2 AND B.5	UNIT NO.
TEST NO.	DATE	LOAD
TIME START:	END:	CALC BY
		DATE
		SHEET OF

Copyright ASME International
Provided by IHS under license with ASME
No reproduction or networking permitted without license from IHS Not for Resale

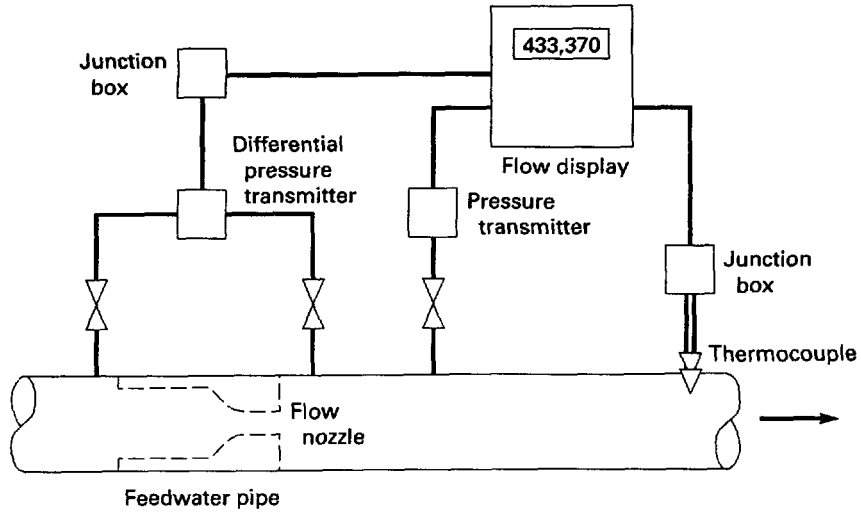

FIG. B.3-1 FLOW MEASUREMENT

the uncertainty of steam generator output be calculated independent of efficiency for several reasons:

- The output is typically a calculated parameter that is guaranteed or determined independently of efficiency.
- The individual measured parameters associated with output typically have a very small effect on efficiency. However, the overall uncertainty of output can have a larger effect, especially in the case of steam generators that use sorbent.
- Determining output uncertainty simplifies the calculations required for efficiency uncertainty.

Figure B.4-1 shows a schematic of the steam generator and the measurements recorded to determine output. The following measurements were recorded:

- barometric pressure
- feedwater flow
- feedwater temperature
- feedwater pressure
- main steam spray flow
- main steam spray temperature
- main steam spray pressure
- main steam temperature
- main steam pressure
- hot reheat outlet temperature
- hot reheat outlet pressure
- cold reheat temperature
- cold reheat pressure
- cold reheat extraction flow

The steam generator output was calculated to be 558.22 Btu/h using the output calculation form shown in Table B.4-1. The use of this calculation form is discussed in Appendix A. Sections B.1 through B.3 show how the feedwater measurements and uncertainty were determined. The uncertainty for the other parameters was determined in a similar manner.

The Output Uncertainty Work Sheets provided with this Code can be used to calculate the uncertainty for the output measurements. The completed Output Uncertainty Work Sheets are included in Tables B.4-2 and B.4-3. The average value, standard deviation, number of readings, and positive and negative bias limit for each of the measurements is required to complete the calculations.

The output total uncertainty was calculated to be +6.51 Btu/h and −6.51 Btu/h. This includes a precision component of 4.84 and a bias limit of +7.73 and −7.73 Btu/h.

B.5 COAL FIRED STEAM GENERATOR

The purpose of this example is to illustrate how steam generator efficiency is calculated and the uncertainty of the result determined.

Figure B.5-1 shows a schematic of the steam generator and the measurements recorded to determine efficiency. The following measurements were assumed or measured:

Copyright ASME International
Provided by IHS under license with ASME
No reproduction or networking permitted without license from IHS
Not for Resale

TABLE B.3-1
FEEDWATER FLOW PRECISION DATA REDUCTION WORK SHEET

Measured Parameter:	FEEDWATER FLOW, lb/hr × 1,000			
1	Measured Data	Conversion to English Units	Correction Factor	Calibrated Data
a	437000			
b	437100			
c	433960			
d	428700			
e	461900			
f	428300			
g	434800			
h	438280			
i	431200			
j	427500			
k	426930			
l	430300			
m	424600			
n	435200			
o	431480			
p	425900			
q	438700			
r	427500			
s	434430			
t	441700			
u				
v				
w				
x				
y				
z				
2	Average Value	([1a] + [1b] + [1c] + . . . [1z])/z		433774.00
3	Standard Deviation			8191.3905
((1/(z − 1)) × (([1a] − [2])^2 + ([1b] − [2])^2 + . . . + ([1z] − [2])^2))^(1/2)				

NAME OF PLANT	ASME PTC 4 EXAMPLE PROBLEMS B.3 AND B.5	UNIT NO.	
TEST NO.	DATE	LOAD	
TIME START:	END:	CALC BY	
		DATE	
		SHEET	OF

Copyright ASME International
Provided by IHS under license with ASME
No reproduction or networking permitted without license from IHS Not for Resale

TABLE B.3-2
FEEDWATER FLOW BIAS DATA REDUCTION WORK SHEET

Measured Parameter:	Feedwater Flow, lb/hr	Work Sheet No:	3C

Estimate of Bias Limit

1	Measured Parameter Individual Biases	Source of Bias Limit	2 Positive		3 Negative	
			Percent*	Unit of Meas	Percent*	Unit of Meas
a	Calibration of primary element	Calibration	0.40		0.40	
b	Stratification	Negligible	0.00		0.00	
c	DP Transmitter	Calculation	0.12		0.12	
d	Installation	Negligible	0.00		0.00	
e	Condition of nozzle or orifice	Engineering judgment	0.50		0.50	
f	Pressure correction	Calculation	0.00		0.00	
g	Temperature correction	Calculation	0.14		0.14	
h	Reynolds number correction	Negligible	0.00		0.00	
i	Measurement location	Negligible	0.00		0.00	
j	Thermal expansion	Engineering judgment	0.10		0.10	
k	Systems Error	Engineering judgment	0.10		0.10	
l						
m						
n						
o						

Total Bias Limit (a^2 + b^2 + c^2 + . . .) ^ (1/2)	2A	2B	3A	3B
	0.68	0.00	0.68	0.00

* This is a percent of reading

NAME OF PLANT	ASME PTC 4 EXAMPLE PROBLEMS B.3 AND B.5	UNIT NO.
TEST NO.	DATE	LOAD
TIME START:	END:	CALC BY
		DATE
		SHEET OF

Copyright ASME International
Provided by IHS under license with ASME
No reproduction or networking permitted without license from IHS
Not for Resale

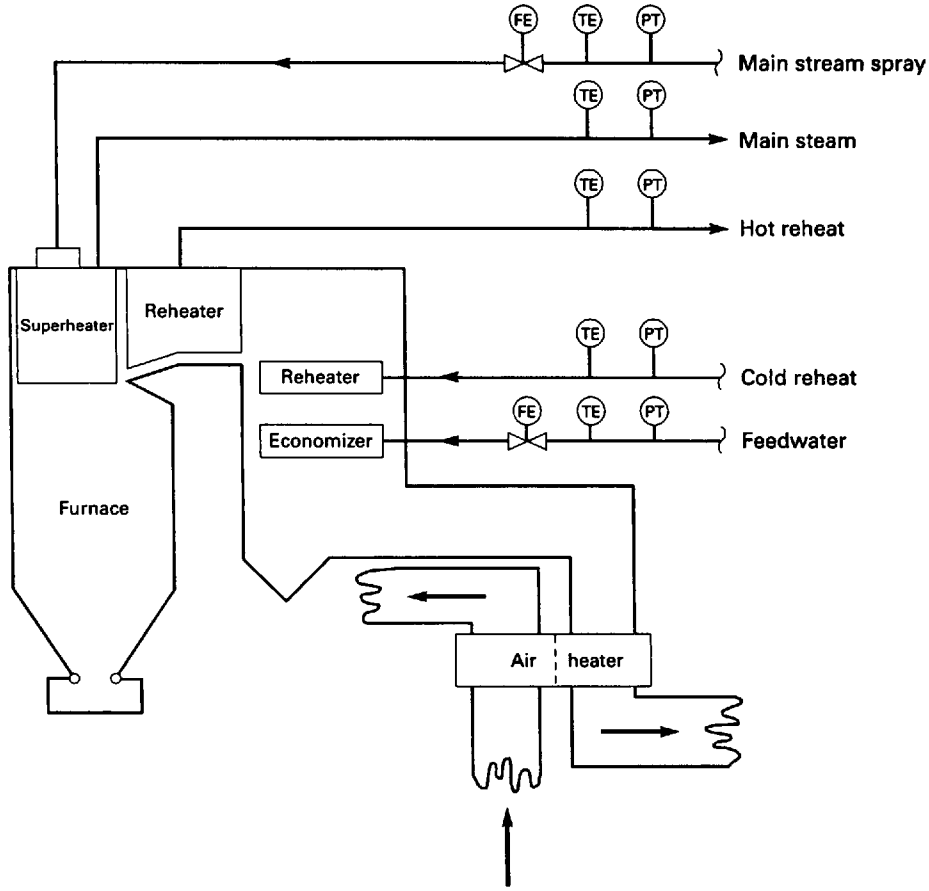

FIG. B.4-1 OUTPUT SCHEMATIC

- fuel higher heating value
- fuel flow
- barometric pressure
- ambient dry-bulb temperature
- relative humidity
- flue gas temperature leaving air heater
- combustion air temperature entering air heater
- flue gas leaving air heater oxygen content
- flue gas entering air heater oxygen content
- combustion air temperature leaving air heater
- fuel carbon content
- fuel sulfur content
- fuel hydrogen content
- fuel moisture content
- fuel nitrogen content
- fuel oxygen content
- fuel ash content
- flue gas temperature entering air heater
- combustion air temperature leaving air heater
- furnace ash flow
- economizer ash flow
- precipitator ash flow
- furnace ash carbon content
- economizer ash carbon content
- precipitator as carbon content
- bottom ash residue temperature
- economizer ash residue temperature
- precipitator ash residue temperature
- fuel temperature

The steam generator efficiency was calculated to be 89.21% using the calculation forms included at the end of this section (Sheets 1 through 8). The uses of these calculation forms are discussed in Appendix A. In addition to the above parameters, the steam generator output was calculated as described in Section B.4. The uncertainty for the above parameters as well as output

Copyright ASME International
Provided by IHS under license with ASME
No reproduction or networking permitted without license from IHS
Not for Resale

TABLE B.4-1
STEAM GENERATOR OUTPUT CALCULATION FORM

	PARAMETER	W FLOW Klbm/hr	T TEMPERATURE F	P PRESSURE PSIG	H ENTHALPY Btu/lbm	Q ABSORPTION MKBtu/hr Wx(H – H1)/1000
1	FEEDWATER (Excluding SH Spray)	433.774	439.5	1676.6	419.49	
2	SH SPRAY WATER	26.431	312.5	2006.4	286.14	–3.52
3	Ent SH-1 Attemp	0.000	0.0	0.0	0.00	
4	Lvg SH-1 Attemp	0.000	0.0	0.0	0.00	
5	SH-1 Spray Water Flow	0.000	W3 x (H3 – H4)/(H4 – H2) or W4 x (H3 – H4)/(H3 – H2)			
6	Ent SH-2 Attemp	0.000	0.0	0.0	0.00	
7	Lvg SH-2 Attemp	0.000	0.0	0.0	0.00	
8	SH-2 Spray Water Flow	0.000	W6 x (H6 – H7)/(H7 – H2) or W7 x (H6 – H7)/(H6 – H2)			
	INTERNAL EXTRACTION FLOWS					
9	Blowdown	0.000		0.0	0.00	0.00
10	Sat Steam Extraction	0.000		0.0	0.00	0.00
11	Sootblowing Steam	0.000	0.0	0.0	0.00	0.00
12	SH Steam Extraction 1	0.000	0.0	0.0	0.00	0.00
13	SH Steam Extraction 2	0.000	0.0	0.0	0.00	0.00
14	Atomizing Steam	0.000	0.0	0.0		0.00
	AUXILIARY EXTRACTION FLOWS					
15	Aux Steam 1	0.000	0.0	0.0	0.00	0.00
16	Aux Steam 2	0.000	0.0	0.0	0.00	0.00
17		0.000				
18	MAIN STEAM	460.205	1005.4	1517.2	1492.31	493.72
19	HIGH PRESS STEAM OUTPUT	Q18 + Q2 + Q9 through Q17				490.19
	REHEAT UNITS					
20	REHEAT OUTLET		1001.7	365.0	1524.76	
21	COLD REHEAT ENT ATTEMPERATOR		651.5	369.0	1337.75	
22	RH SPRAY WATER	0.000	0.0	0.0	0.00	
23	COLD REHEAT EXTRACTION FLOW	96.460				
24	TURB SEAL FLOW & SHAFT LKG	0.000				
	FW HEATER NO. 1					
25	FW Entering	0.000	0.0	0.0	0.00	
26	FW Leaving		0.0	0.0	0.00	
27	Extraction Steam		0.0	0.0	0.00	
28	Drain		0.0	0.0	0.00	
29	FW HEATER NO. 1 FLOW	0.000	W25 x (H26 – H25)/(H27 – H28)			
	FW HEATER NO. 2					
30	FW Entering	0.000	0.0	0.0	0.00	
31	FW Leaving		0.0	0.0	0.00	
32	Extraction Steam		0.0	0.0	0.00	
33	Drain		0.0	0.0	0.00	
34	FW HEATER NO. 2 FLOW	0.000	W30 x [(H31 – H30) – W29 x (H28 – H33)]/(H32 – H33)			
35	COLD REHEAT FLOW	363.745	W18 – W23 – W24 – W29 – W34			
36	REHEAT OUTPUT	W35 x (H20 – H21) + W22 x (H20 – H22)				68.02
37	TOTAL OUTPUT	Q19 + Q36				558.22

NAME OF PLANT ASME PTC 4 EXAMPLE PROBLEMS B.4 AND B.5	UNIT NO.
TEST NO. DATE	LOAD
TIME START: END:	CALC BY
	DATE
	SHEET OF

Copyright ASME International
Provided by IHS under license with ASME
No reproduction or networking permitted without license from IHS
Not for Resale

Copyright ASME International
Provided by IHS under license with ASME
No reproduction or networking permitted without license from IHS

TABLE B.4-2
OUTPUT UNCERTAINTY WORK SHEET NO. 1A

	Measured Parameter (from DATA)	1 Average Value (Item [2] on Form PREC)	2 Standard Deviation (Item [3] on Form PREC)	Bias Sheet No.	3 Total Positive Bias Limit (Item [2] on Form BIAS) %	3 Total Positive Bias Limit (Item [2] on Form BIAS) Unit	4 Total Negative Bias Limit (Item [2] on Form BIAS) %	4 Total Negative Bias Limit (Item [2] on Form BIAS) Unit	5 No. of Readings (Item [1] on Form PREC	6 Precision Index (([2]^2)/[5])^1/2	7 Degrees of Freedom [5] − 1	8 Percent Change	9 Incremental Change* [8] x [1]/100
a	Barometric Pressure	29.5	0.0361	4B	0.00	0.32	0.00	0.32	3	0.02	2	1.00	0.30
b	Feedwater Flow	433774	8191.39	3C	1.23	0.00	1.23	0.00	20	1831.65	19	1.00	4337.74
c	Feedwater Temp	439.50	0.5477	1E	0.00	3.16	0.00	3.16	6	0.22	5	1.00	4.40
d	Feedwater Press	1676.60	8.8204	2A	1.00	2.24	1.00	2.24	5	3.94	4	1.00	16.77
e	Main Steam Spray Flow	26431	718.84	3D	2.00	1.41	2.00	1.41	20	160.74	19	1.00	264.31
f	Main Steam Spray Temp	312.50	0.5222	1E	0.00	3.16	0.00	3.16	12	0.15	11	1.00	3.13
g	Main Steam Spray Press	2006.40	9.8133	2A	1.00	2.24	1.00	2.24	5	4.39	4	1.00	20.06
h	Main Steam Temp	1005.4	0.55	1D	0.00	3.16	0.00	3.16	5	0.24	4	1.00	10.05
i	Main Steam Press	1517.20	2.05	2A	1.00	2.24	1.00	2.24	5	0.92	4	1.00	15.17
j	Hot Reheat Outlet Temp	1001.7	0.82	1D	0.00	3.16	0.00	3.16	6	0.33	5	1.00	10.02
k	Hot Reheat Outlet Press	365.00	0.71	2A	1.00	2.24	1.00	2.24	5	0.32	4	1.00	3.65
l	Cold Reheat Temp Ent Attemp	651.5	1.00	1D	0.00	3.16	0.00	3.16	12	0.29	11	1.00	6.52
m	Cold Reheat Press Ent Attemp	369.00	1.00	2A	1.00	2.24	1.00	2.24	5	0.45	4	1.00	3.69
n	Cold Reheat Extraction Flow	96460.0	1643.94	3E	0.87	0.00	2.12	0.00	20	367.60	19	1.00	964.60
o													
p													
q													
r													
s													
t													
u													
v													
w													
x													
y													
z													
aa													
ab													
ab													

This work sheet is set up for constant value parameters.
See Section 5.2 of the Code for calculation of average value, degrees of freedom, and precision index for integrated average value parameters.

* The value used for incremental change can be any increment of the average value.
The recommended increment is 1.0% (0.01 times the average value).
If the average value of the measured parameter is zero, use any small incremental change.
The incremental change must be in the same units as the average value.

NAME OF PLANT ASME PTC 4 EXAMPLE PROBLEMS B.4 AND B.5	UNIT NO.
TEST NO. DATE	LOAD
TIME START: END:	CALC BY
	DATE
	SHEET OF

Not for Resale

Copyright ASME International
Provided by IHS under license with ASME
No reproduction or networking permitted without license from IHS

TABLE B.4-3
OUTPUT UNCERTAINTY WORK SHEET NO. 2A

	Measured Parameter	10 Recalc Output *	11 Absolute Sensitivity Coefficient ([10] − [20])/[9]	12 Relative Sensitivity Coefficient [11] × [1]/[20]	13 Precision Index of Result Calculation [11] × [6]	14 Overall Deg of Freedom Contribution ([11] × [6])^4/[7]	15 Positive Bias Limit of Result (([1] × [3A]/100)^2 + [3B]^2)^1/2 × [11]	16 Negative Bias Limit of Result (([1] × [4A]/100)^2 + [4B]^2)^1/2 × [11]
a	Barometric Pressure	558.216	−0.0000	−0.0000	−0.0000	0.0000	0.32	0.32
b	Feedwater Flow	563.681	0.0013	0.9790	2.3076	1.4923	2954.76	2954.76
c	Feedwater Temp	555.874	−0.5330	−0.4196	−0.1192	0.0000	3.16	3.16
d	Feedwater Press	558.209	−0.0004	−0.0012	−0.0016	0.0000	16.91	16.91
e	Main Steam Spray Flow	558.514	0.0011	0.0533	0.1811	0.0001	132.16	132.16
f	Main Steam Spray Temp	558.300	0.0270	0.0151	0.0041	0.0000	3.16	3.16
g	Main Steam Spray Press	558.217	0.0000	0.0002	0.0002	0.0000	20.19	20.19
h	Main Steam Temp	560.975	0.2744	0.4943	0.0672	0.0000	3.16	3.16
i	Main Steam Press	558.000	−0.0142	−0.0387	−0.0130	0.0000	15.34	15.34
j	Hot Reheat Outlet Temp	560.165	0.1946	0.3491	0.0649	0.0000	3.16	3.16
k	Hot Reheat Outlet Press	558.180	−0.0099	−0.0064	−0.0031	0.0000	4.28	4.28
l	Cold Reheat Temp Ent Attemp	556.899	−0.2022	−0.2360	−0.0584	0.0000	3.16	3.16
m	Cold Reheat Press Ent Attemp	558.306	0.0244	0.0161	0.0109	0.0000	4.31	4.31
n	Cold Reheat Extraction Flow	558.036	−0.0002	−0.0323	−0.0687	0.0000	835.37	835.37
o								
p								
q								
r								
s								
t								
u								
v								
w								
x								
y								
z								
aa								
ab								
ab								

* This uncertainty work sheet is set up for calculating the uncertainty effect on efficiency; however, this sheet can be used for any calculated item such as output, fuel flow, calcium/sulfur ratio, etc.

20	*Base Output	from item [37] on OUTPUT form	558.216
21	Precision Index of Result	([13a]^2 + [13b]^2 + ...)^1/2	2.3214
22	Overall Degrees of Freedom	[21]^4/([14a] + [14b] + ...)	19.4592
23	Student t Value	from Table 5.16-1 in Code	2.0891
24	Precision Component of Uncertainty	[21] × [23]	4.8496
25	Positive Bias Limit of Result	([15a]^2 + [15b]^2 + ...)^1/2	4.3488
26	Negative Bias Limit of Result	([16a]^2 + [16b]^2 + ...)^1/2	4.3488
27	Positive Total Uncertainty	([24]^2 + [25]^2)^1/2	6.5139
28	Negative Total Uncertainty	([24]^2 + [26]^2)^1/2	6.5139

NAME OF PLANT ASME PTC 4 EXAMPLE PROBLEMS B.4 AND B.5	UNIT NO
TEST NO. DATE	LOAD
TIME START: END:	CALC BY
	DATE
	SHEET OF

Not for Resale

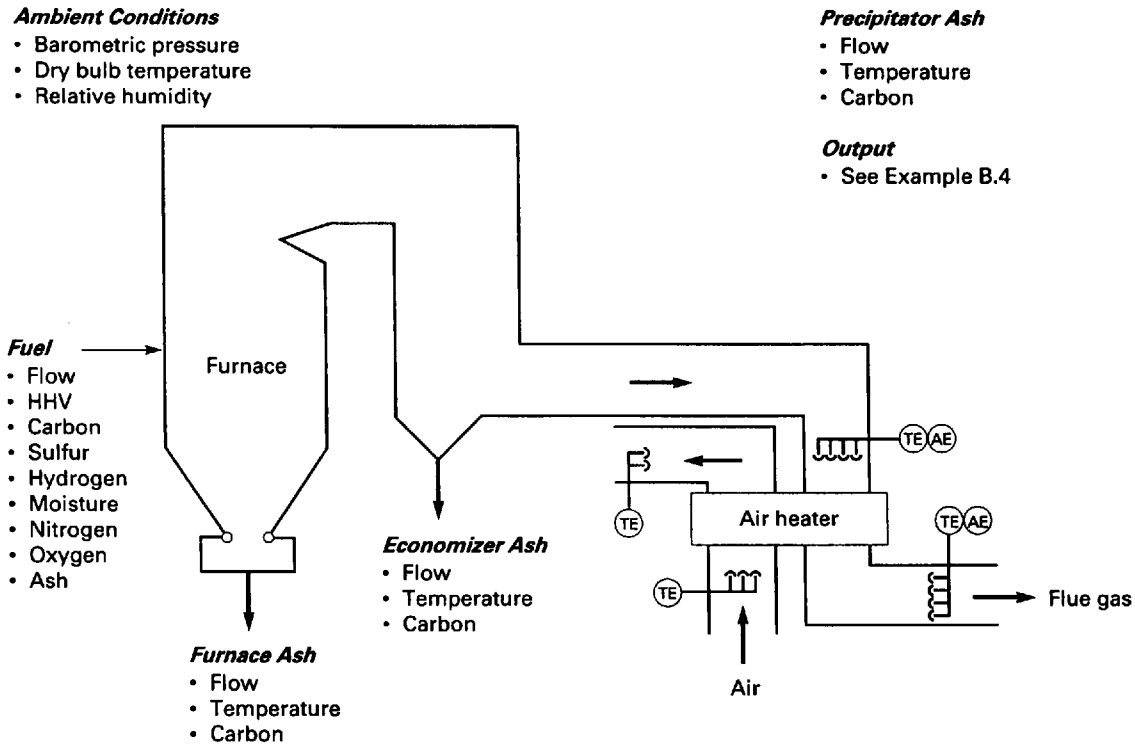

FIG. B.5-1 EFFICIENCY SCHEMATIC

were determined in a manner similar to the methods described in Sections B.1 through B.4.

The Efficiency Uncertainty Work Sheets provided with this Code can be used to calculate the uncertainty for the efficiency measurements. The completed Efficiency Uncertainty Work Sheets are included at the end of this section. The average value, standard deviation, number of readings, and positive and negative bias limit for each of the measurements is required to complete the calculations.

The efficiency total uncertainty was calculated to be +0.43% and −0.43%. This includes a precision component of 0.10 and a bias limit of +0.42% and −0.42%.

Also included at the end of this section are four Input Data Sheets. These sheets are used to document all measured or assumed parameters for the test. These input sheets are primarily for use in the computer spreadsheet which was developed to complete the calculations.

B.6 OIL FIRED STEAM GENERATOR

In this example, the efficiency of an oil fired unit is determined by both the input-output method and the energy balance method. The uncertainty of the efficiency is also calculated for each method in order to evaluate the quality of each test method.

The same steam generator and boundary conditions used for the coal fired steam generator in Section B.5 are used except for the following differences which are related to the fuel:

- fuel properties
- fuel residue flow and associated properties are deemed to be negligible
- unburned combustibles are deemed to be negligible

B.6.1 Efficiency by the Input-Output Method. The required data for this method consists of those measurements necessary to determine output (Section B.4) and input. Input is calculated from measured fuel flow and the fuel higher heating value.

Higher heating value (*HHV*) fuel was sampled during the test in accordance with Section 4, the samples were mixed and one sample analyzed. The average higher heating value for the test was determined to be 17,880 Btu/lbm. The biases for the higher heating value were considered to consist of the ASTM reproducibility interval (89 Btu/lbm per ASTM D4809) and a 0.5%

Copyright ASME International
Provided by IHS under license with ASME
No reproduction or networking permitted without license from IHS
Not for Resale

EFFICIENCY CALCULATIONS
Data Required

	TEMPERATURES, F				
1	Reference Temperature	77	1A	Enthalpy Water (32 F Ref)	45
2	Average Entering Air Temp from CMBSTNa [16] or EFFa [44]	85.7	2A	Enthalpy Dry Air	2.10
			2B	Enthalpy Water Vapor	3.89
3	Average Exit Gas T (Excl Lkg) from CMBSTNa [15] or EFFa [51]	298.8	3A	Enthalpy Dry Gas	53.00
			3B	Enthalpy Steam @ 1 PSIA	1195.08
			3C	Enthalpy Water Vapor	99.98
4	Fuel Temperature	84.0	4A	Enthalpy Fuel	1.42
	HOT AIR QUALITY CONTROL EQUIPMENT				
5	Entering Gas Temperature	0.0	5A	Enthalpy Wet Gas	0.00
6	Leaving Gas Temperature	0.0	6A	Enthalpy of Wet Gas	0.00
			6B	Enthalpy of Wet Air	0.00
			6C	Enthalpy of Wet Air @ T = [3]	0.00
	RESULTS FROM COMBUSTION CALCULATION FORM CMBSTN				
10	Dry Gas Weight [77]	9.470	18	Unburned Carbon, % [2]	0.616
11	Dry Air Weight [69]	9.118	19	HHV Btu/lbm as-fired [1]	11447.6
12	Water from H2 Fuel [34E]	0.337		**HOT AQC EQUIPMENT**	
13	Water from H2O Fuel [34F]	0.088	20	Wet Gas Entering [75E]	0.00
14	Water from H2Ov Fuel [34G]	0.000	21	H2O in Wet Gas, % [76E]	0.00
15	Moisture in Air lb/lb DA [7]	0.009	22	Wet Gas Leaving [75L]	0.00
16	Moisture in Air lb/10KB [72]	0.085	23	Residue in Wet Gas, % [81E]	0.00
17	Fuel Rate Est. Klb/hr [3]	54.76			
			25	Excess Air, % [60]	22.10
	MISCELLANEOUS				
30	Unit Output, MKBtu/hr	558.22	31	Aux Equip Power, MKBtu/hr	0.0
32	Loss Due to Surface Radiation and Convection, %				0.00
33A	Flat Projected Surface Area, ft2	0	33C	Average Surface Temperature, F	0.0
33B	Average Velocity of Air Near Surface, ft/sec	0.0	33D	Average Ambient Temperature Near Surface, F	0.0
	ENT AIR TEMP (Units with primary and secondary air flow)			**Item No's CMBSTN**	
35A	Pri Air Temp Entering, F CMBSTNa [16B]	84.9	35B	Enthalpy Wet Air, Btu/lb	1.9
36A	Pri Air Temp Leaving Air Htr, F CMBSTNa [51]	511.4	36B	Enthalpy Wet Air, Btu/lb	106.5
37A	Average Air Temp Entering Pulverizers, F	511.4	37B	Enthalpy Wet Air, Btu/lbm	106.5
38A	Average Pulverizer Tempering Air Temp, F	84.9	38B	Enthalpy Wet Air, Btu/lbm	1.9
39	Sec Air Temp Entering, F CMBSTNa [16A]	85.9	40	Primary Airflow (Ent Pulv), Klb/hr	83.2
41	Pulverizer Tempering Airflow, Klb/hr	[40] × ([36B] – [37B])/([36B] – [38B])			0.0
42	Total Airflow, Klb/hr Form CMBSTNc [96]	576.6	43	Secondary Airflow, Klb/hr [42] – [40] – [41]	493.7
44	Average Entering Air Temperature, F	([35A] × ([40] – [41]) + [39] × [43] + [38A] × [41])/[42]			85.7
	GAS FLOW ENT PRI AH AND AVG EXIT GAS TEMP (Units with primary and secondary AH's)				
45A	Flue Gas Temp Ent Pri AH, F CMBSTNb [50]	658.5	45B	Enthalpy Wet Flue Gas, Btu/lbm	150.1
46A	Flue Gas Temp Lvg Pri AH, F CMBSTNc [88]	293.5	46B	Enthalpy Wet Flue Gas, Btu/lbm	54.4
47	Flue Gas Temp Lvg Sec AH, F CMBSTNc [88]	299.7	48	Total Gas Ent Air Htrs, Klb/hr CMBSTNc [93]	617.8
49	Flue Gas Flow Ent Pri Air Htr, Klb/hr	[40] × ([37B] – [35B])/([45B] – [46B])			90.9
50	Flue Gas Flow Ent Sec Air Htr, Klb/hr [48] – [49]	617.8			
51	Average Exit Gas Temperature, F	([46A] × [49] + [47] × [50])/[48]			298.8
	Iteration of flue gas split, % primary AH flow Initial Estimate	0.1		Calculated	14.7

NAME OF PLANT ASME PTC 4 EXAMPLE PROBLEM B.5	UNIT NO.
TEST NO. DATE	LOAD
TIME START: END:	CALC BY
	DATE
	SHEET OF

Copyright ASME International
Provided by IHS under license with ASME
No reproduction or networking permitted without license from IHS
Not for Resale

EFFICIENCY CALCULATIONS

	LOSSES, % Enter Calculated Result in % Column [B]	A MKB	B %
60	Dry Gas [10] × [3A] / 100 × / 100		5.08
61	Water from H2 Fuel [12] × ([3B] – [1A]) / 100 × (– 45) / 100		3.87
62	Water from H2O Fuel [13] × ([3B] – [1A]) / 100 × (– 45) / 100		1.01
63	Water from H2Ov Fuel [14] × ([3C] / 100 × / 100		0.00
64	Moisture in Air [16] × [3C] / 100 × / 100		0.08
65	Unburned Carbon in Ref [18] × 14500 / [19] = × 14500 /		0.78
66	Sensible Heat of Refuse – from Form RES		0.11
67	Hot AQC Equip ([20] × ([5A] – [6A]) – ([22] – [20]) × ([6B] – [6C])) / 100 (× (–) – (–) × (–)) / 100		0.00
68	Other Losses, % Basis – from Form EFFc Item [110]		0.28
69	Summation of Losses, % Basis		11.16
	LOSSES, MKBtu/hr Enter in MKB Column [A]		
75	Surface Radiation and Convection – from Form EFFa Item [32]	0.000	
76	Sorbent Calcination/Dehydration – from Form SRBc Item [77]	0.000	
77	Water from Sorbent – from Form SRBc Item [65]	0.000	
78			
79			
80	Other Losses, MKBtu/hr Basis – from Form EFFc Item [111]	0.000	
81	Summation of Losses, MKBtu/hr Basis	0.000	
	CREDITS, % Enter Calculation Result in % Column [B]		
85	Entering Dry Air [11] × [2A] / 100 × / 100		0.19
86	Moisture in Air [16] × [2B] / 100 × / 100		0.00
87	Sensible Heat in Fuel 100 × [4A] / [19] 100 × /		0.01
88	Sulfation – from Form SRBc Item [80]		0.00
89	Other Credits, % Basis – from Form EFFc Item [112]		0.00
90	Summation of Credits, % Basis		0.21
	CREDITS, MKBtu/hr Enter Calculated Result in MKB Column [A]		
95	Auxiliary Equipment Power [31]	0.000	
96	Sensible Heat from Sorbent – from Form SRBc Item [85]	0.000	
97	Other Credits, MKBtu/hr Basis – from Form EFFc Item [113]	0.000	
98	Summation of Credits, MKBtu/hr Basis	0.000	
100	Fuel Eff, % (100 – [69] + [90]) × [30] / ([30] + [81] – [98]) (100 – +) × / (– +)		89.05
101	Input from Fuel, MKB 100 × [30] / [100] = 100 × /	626.9	
102	Fuel Rate, Klbm/hr 1000 × [101] / [19] = 1000 × /		54.76

NAME OF PLANT ASME PTC 4 EXAMPLE PROBLEM B.5	UNIT NO.
TEST NO. DATE	LOAD
TIME START: END:	CALC BY
	DATE
	SHEET OF

Copyright ASME International
Provided by IHS under license with ASME
No reproduction or networking permitted without license from IHS Not for Resale

EFFICIENCY CALCULATIONS
Other Losses and Credits

The losses and credits listed on this sheet are not universally applicable to all fossil fired steam generators and are usually minor. Losses/credits that have not been specifically identified by this Code but are applicable in accordance with the intent of the Code should also be recorded on this sheet.
Parties to the test may agree to estimate the losses or credits in lieu of testing. Enter a 'T' for tested or 'E' for estimated in the second column, and the result in the appropriate column. Enter the sum of each group on Form EFFb. Refer to the text of PTC 4 for the calculation method.

Itm	T or E	LOSSES, % Enter Calculated Result in % Column [B]	A MKB	B %
110A		CO in Flue Gas		0.05
110B		Formation of NOx		0.00
110C		Pulverizer Rejects		0.09
110D		Air Infiltration		0.00
110E		Unburned Hydrocarbons in Flue Gas		0.00
110F		Radiation Loss to Hopper		0.14
110G				0.00
110		Summation of Other Losses, % Basis		0.28
		LOSSES, MKBtu/hr Enter in MKB Column [A]		
111A		Wet Ash Pit	0.000	
111B		Sensible Heat in Recycle Streams — Solid	0.000	
111C		Sensible Heat in Recycle Streams — Gas	0.000	
111D		Additional Moisture	0.000	
111E		Cooling Water	0.000	
111F		Air Preheater Coil (supplied by unit)	0.000	
111G			0.000	
111		Summation of Other Losses, MKBtu/hr Basis	0.000	
		CREDITS, % Enter Calculation Result in % Column [B]		
112A				0.00
112		Summation of Credits, % Basis		0.00
		CREDITS, MKBtu/hr Enter Result in MKB Column [A]		
113A		Heat in Additional Moisture (external to envelope)	0.000	
113B			0.000	
113		Summation of Credits, MKBtu/hr Basis	0.000	

NAME OF PLANT ASME PTC 4 EXAMPLE PROBLEM B.5	UNIT NO.
TEST NO. DATE	LOAD
TIME START: END:	CALC BY
	DATE
	SHEET OF

Copyright ASME International
Provided by IHS under license with ASME
No reproduction or networking permitted without license from IHS Not for Resale

EFFICIENCY UNCERTAINTY WORK SHEET NO. 1B

	Measured Parameter (from DATA)	1 Average Value (Item [2] on Form PREC)	2 Standard Deviation (Item [3] on Form PREC)	Bias Sheet No.	3 Total Positive Bias Limit (Item [2] on Form BIAS) %	3 Total Positive Bias Limit (Item [2] on Form BIAS) Unit	4 Total Negative Bias Limit (Item [2] on Form BIAS) %	4 Total Negative Bias Limit (Item [2] on Form BIAS) Unit	5 No. of Readings (Item [1] on Form PREC)	6 Precision Index (([2]^2)/[5])^1/2	7 Degrees of Freedom [5] - 1	8 Percent Change	9 Incremental Change* [8] x [1]/100
a	Output	558.22				4.28		4.28		2.32	19.5	1.00	5.58
b	Fuel HHV	11447.55	0.0707	6A	2.00	107.00	2.00	107.00	2	0.0500	1	1.00	114.48
c	Fuel Flow	61901.30	655.8452	3A	5.10	0.00	5.10	0.00	20	146.6515	19	1.00	619.01
d	Barometric Pressure	29.50	0.0361	4B	0.00	0.32	0.00	0.32	3	0.02	2	1.00	0.30
e	Amb Dry Bulb Temp	83.17	1.1690	1A	0.00	1.12	0.00	1.12	6	0.4773	5	1.00	0.83
f	Relative Humidity	38.00	0.8944	4A	0.00	0.71	0.00	0.71	6	0.37	5	1.00	0.38
g	Flue Gas Temp Lvg Pri AH	276.01		1C	0.00	3.27	0.00	3.27		0.09	92.5	1.00	2.76
h	Comb Air Temp Ent Pri Air Htr	84.88		1B	0.00	1.23	0.00	1.23		0.10	80.5	1.00	0.85
i	02 in FG Ent Sec Air Htr	3.88		5A	0.00	0.14	0.00	0.14		0.01	79.8	1.00	0.04
j	02 in FG Ent Pri Air Htr	3.91		5A	0.00	0.14	0.00	0.14		0.01	79.8	1.00	0.04
k	02 in FG Lvg Sec Air Htr	5.59		5B	0.00	0.14	0.00	0.14		0.05	80.2	1.00	0.06
l	02 in FG Lvg Pri Air Htr	5.51		5B	0.00	0.14	0.00	0.14		0.05	80.2	1.00	0.06
m	Fuel Carbon	63.68	0.0707	6B	3.21	0.00	3.21	0.00	2	0.05	1	1.00	0.64
n	Fuel Sulfur	2.93	0.0071	6C	2.01	0.00	2.01	0.00	2	0.00	1	1.00	0.03
o	Fuel Hydrogen	4.32	0.0071	6D	2.01	0.00	2.01	0.00	2	0.01	1	1.00	0.04
p	Fuel Moisture	10.05	0.0707	6E	2.09	0.00	2.09	0.00	2	0.05	1	1.00	0.10
q	Fuel Nitrogen	1.24	0.0071	6D	2.01	0.00	2.01	0.00	2	0.00	1	1.00	0.01
r	Fuel Oxygen	732	0.0071	6D	2.01	0.00	2.01	0.00	2	0.01	1	1.00	0.07
s	Fuel Ash	10.48	0.0071	6F	10.00	0.00	10.00	0.00	2	0.00	1	1.00	0.10
t	FG Temp Ent Pri Air Htr	658.50		1H	0.00	3.23	0.00	3.23		0.39	29.8	1.00	6.59
u	Comb Air Temp Lvg Pri Air Htr	511.22		1J	0.00	3.20	0.00	3.20		0.29	80.3	1.00	5.11
v	Furnace Residue Flow, %	15	0.00	3F	0.00	10.00	0.00	10.00	2	0.00	1	1.00	0.15
w	Economizer Residue Flow, %	10	0.00	INPUT	0.00	0.00	0.00	0.00	2	0.00	1	1.00	0.10
x	Precipitator Residue Flow, %	75	0.00	3G	0.00	20.00	0.00	20.00	2	0.00	1	1.00	0.75
y	Fuel Volumetric Matter	10.00	0.10	INPUT	0.00	0.00	0.00	0.00	3	0.06	2	1.00	0.10
z	Fuel Fixed Carbon	45.00	1.00	INPUT	0.00	0.00	0.00	0.00	3	0.58	2	1.00	0.45
aa													
ab	Flue Gas Temp Lvg Sec AH	280.68		1C	0.00	3.27	0.00	3.27		0.09	92.527	1.00	2.81
ac	Comb Air Temp Ent Sec Air Htr	85.88		1B	0.00	1.23	0.00	1.23		0.10	80.515	1.00	0.86

This work sheet is set up for constant value parameters.
See Section 5.2 of the Code for calculation of average value, degrees of freedom, and precision index for integrated average value parameters.

* The value used for incremental change can be any increment of the average value. The recommended increment is 1.0% (0.01 times the average value).
If the average value of the measured parameter is zero, use any small incremental change. It is important to note that the incremental change must be in the same units as the average value.

NAME OF PLANT ASME PTC 4 EXAMPLE PROBLEM B.5	UNIT NO.
TEST NO. DATE	LOAD
TIME START: END:	CALC BY
	DATE
	SHEET OF

Copyright ASME International
Provided by IHS under license with ASME
No reproduction or networking permitted without license from IHS
Not for Resale

EFFICIENCY UNCERTAINTY WORK SHEET NO. 2B

	Measured Parameter	10 Recalc Efficiency *	11 Absolute Sensitivity Coefficient ([10] – [20])/[9]	12 Relative Sensitivity Coefficient [11] × [1]/[20]	13 Precision Index of Result Calculation [11] × [6]	14 Overall Deg of Freedom Contribution ([11] × [6])^4/[7]	15 Positive Bias Limit of Result ([1] × [3A]/100)^2 + [3B]^2)^1/2 × [11]	16 Negative Bias Limit of Result ([1] × [4A]/100)^2 + [4B]^2)^1/2 × [11]
a	Output	89.0485	0.0000	0.0000	0.0000	0.0000	4.28	4.28
b	Fuel HHV	89.1541	0.0009	0.1186	0.0000	0.0000	252.72	252.72
c	Fuel Flow	89.0485	0.0000	0.0000	0.0000	0.0000	3156.36	3156.36
d	Barometric Pressure	89.0493	0.0028	0.0009	0.0001	0.0000	0.32	0.32
e	Amb Dry Bulb Temp	89.0462	−0.0027	−0.0025	−0.0013	0.0000	1.12	1.12
f	Relative Humidity	89.0477	−0.0022	−0.0009	−0.0008	0.0000	0.71	0.71
g	Flue Gas Temp Lvg Pri AH	89.0374	−0.0040	−0.0125	−0.0003	0.0000	3.27	3.27
h	Comb Temp Ent Pri Air Htr	89.0515	0.0035	0.0033	0.0003	0.0000	1.23	1.23
i	O_2 in FG Ent Sec Air Htr	89.0472	−0.0325	−0.0014	−0.0005	0.0000	0.14	0.14
j	02 in FG Ent Pri Air Htr	89.0500	0.0392	0.0017	0.0006	0.0000	0.14	0.14
k	02 in FG Lvg Sec Air Htr	89.0335	−0.2686	−0.0169	−0.0123	0.0000	0.14	0.14
l	02 in FG Lvg Pri Air Htr	89.0461	−0.0443	−0.0027	−0.0020	0.0000	0.14	0.14
m	Fuel Carbon	89.0073	−0.0647	−0.0463	−0.0032	0.0000	2.04	2.04
n	Fuel Sulfur	89.0478	−0.0242	−0.0008	−0.0001	0.0000	0.06	0.06
o	Fuel Hydrogen	89.0038	−1.0357	−0.0502	−0.0052	0.0000	0.09	0.09
p	Fuel Moisture	89.0390	−0.0949	−0.0107	−0.0047	0.0000	0.21	0.21
q	Fuel Nitrogen	89.0485	−0.0016	−0.0000	−0.0000	0.0000	0.02	0.02
r	Fuel Oxygen	89.0502	0.0229	0.0019	0.0001	0.0000	0.15	0.15
s	Fuel Ash	89.0401	−0.0805	−0.0095	−0.0004	0.0000	1.05	1.05
t	FG Temp Ent Pri Air Htr	89.0481	−0.0001	−0.0005	−0.0000	0.0000	3.23	3.23
u	Comb Air Temp Lvg Pri Air Htr	89.0452	−0.0007	−0.0037	−0.0002	0.0000	3.20	3.20
v	Furnace Residue Flow, %	89.0478	−0.0048	−0.0008	0.0000	0.0000	10.00	10.00
w	Economizer Residue Flow, %	89.0477	−0.0084	−0.0009	0.0000	0.0000	0.00	0.00
x	Precipitator Residue Flow, %	89.0406	−0.0105	−0.0088	0.0000	0.0000	20.00	20.00
y	Fuel Volumetric Matter	89.0485	0.0000	0.0000	0.0000	0.0000	0.00	0.00
z	Fuel Fixed Carbon	89.0486	0.0001	0.0001	0.0001	0.0000	0.00	0.00
aa								
ab	Flue Gas Temp Lvg Sec AH	88.9821	−0.0237	−0.0746	−0.0020	0.0000	3.27	3.27
ac	Comb Air Temp Ent Sec Air Htr	89.0667	0.0212	0.0204	0.0021	0.0000	1.23	1.23

* This uncertainty work sheet is set up for calculating the uncertainty effect on efficiency; however, this sheet can be used for any calculated item such as output, fuel flow, calcium/sulfur ratio, etc.

20	* Base Efficiency	from Item [37] Output Form	
21	Precision Index of Result	([13a]^2 + [13b]^2 + ...)^1/2	0.0002
22	Overall Degrees of Freedom	[21]^4/([14a] + [14b] + ...)	0.0000
23	Student t Value	from Table 5.16-1 in Code	
24	Precision Component of Uncertainty	[21] × [23]	
25	Positive Bias Limit of Result	([15a]^2 + [15b]^2 + ...)^1/2	0,1406
26	Negative Bias Limit of Result	([16a]^2 + [16b]^2 + ...)^1/2	0.1406
27	Positive Total Uncertainty	([24]^2 + [25]^2)^1/2	
28	Negative Total Uncertainty	([24]^2 + [26]^2)^1/2	

NAME OF PLANT ASME PTC 4 EXAMPLE PROBLEM B.5	UNIT NO.
TEST NO. DATE:	LOAD
TIME START: END:	CALC BY
	DATE
	SHEET OF

Copyright ASME International
Provided by IHS under license with ASME
No reproduction or networking permitted without license from IHS
Not for Resale

EFFICIENCY UNCERTAINTY WORK SHEET NO. 1C

	Measured Parameter (from DATA)	1 Average Value (Item [2] on Form PREC)	2 Standard Deviation (Item [3] on Form PREC)	Bias Sheet No.	3 Total Positive Bias Limit (Item [2] on Form BIAS %	3 Total Positive Bias Limit (Item [2] on Form BIAS Unit	4 Total Negative Bias Limit (Item [2] on Form BIAS) %	4 Total Negative Bias Limit (Item [2] on Form BIAS) Unit	5 No. of Readings (Item [1] on Form PREC)	6 Precision Index (([2]^2)/[5])^1/2	7 Degrees of Freedom [5] − 1	8 Percent Change	9 Incremental Change* [8] x [1]/100
a	Furn Residue Carbon Content	0.1	0.00	7A	0.00	0.40	0.00	0.40	2	0.00	1	1.00	0.00
b	Econ Residue Carbon Content	4.8	0.45	7A	0.00	0.40	0.00	0.40	6	0.19	5	1.00	0.05
c	Precip Residue Carbon Content	6.8	0.51	7A	0.00	0.40	0.00	0.40	6	0.21	5	1.00	0.07
d	Furnace Residue Temp	2000.0	100.00	INPUT	0.00	50.00	0.00	50.00	3	5.77	2	1.00	20.00
e	Economizer Residue Temp	653.8	4.79	1B	0.00	3.27	0.00	3.27	4	2.39	3	1.00	6.54
f	Precipitator Residue Temp	276.5	1.29	1B	0.00	3.27	0.00	3.27	4	0.65	3	1.00	2.77
g	Fuel Temp	84.0	1.0	1F	0.00	3.16	0.00	3.16	3	0.58	2	1.00	0.84
h													
i	Avg Air Temp Ent Pulverizer	511.4	0.84	1J	0.00	3.20	0.00	3.20	10	0.27	9	1.00	5.11
j	Avg Pulv Tempering Air Temp	84.9	0.49	1A	0.00	1.12	0.00	1.12	10	0.15	9	1.00	0.85
k	Pri Air Flow (Ent Pulverizer)	83.2	0.79	3H	5.39	0.00	5.39	0.00	10	0.25	9	1.00	0.83
l													
m	FG Temp Ent Sec Air Htr	660.0		1H	0.00	3.23	0.00	3.23		0.39	29.78	1.00	6.60
n	Comb Air Temp Lvg Sec Air Htr	493.9		1J	0.00	3.20	0.00	3.20		0.29	80.32	1.00	4.94
o													
p													
q													
r													
s													
t													
u													
v													
w													
x													
y													
z													
aa													
ab													
ac													

This work sheet is set up for constant value parameters.
See Section 5.2 of the Code for calculation of average value, degrees of freedom, and precision index for integrated average value parameters.

* The value used for incremental change can be any increment of the average value.
The recommended increment is 1.0% (0.01 times the average value).
If the average value of the measured parameter is zero, use any small incremental change.
It is important to note that the incremental change must be in the same units as the average value.

NAME OF PLANT ASME PTC 4 EXAMPLE PROBLEM B.5	UNIT NO.
TEST NO. DATE:	LOAD
TIME START: END:	CALC BY
	DATE
	SHEET OF

Copyright ASME International
Provided by IHS under license with ASME
No reproduction or networking permitted without license from IHS
Not for Resale

EFFICIENCY UNCERTAINTY WORK SHEET NO. 2C

	Measured Parameter	10 Recalc Efficiency *	11 Absolute Sensitivity Coefficient ([10] – [20])/[9]	12 Relative Sensitivity Coefficient [11] x [1]/[20]	13 Precision Index of Result Calculation [11] x [6]	14 Overall Deg of Freedom Contribution ([11] x [6])^4/ [7]	15 Positive Bias Limit of Result (([1] x [3A]/100)^2 + [3B]^2)^1/2 x [11]	16 Negative Bias Limit of Result (([1] x [4A]/100)^2 + [4B]^2)^1/2 x [11]
a	Furn Residue Carbon Content	89.0485	–0.0225	–0.0000	0.0000	0.0000	0.40	0.40
b	Econ Residue Carbon Content	89.0478	–0.0150	–0.0008	–0.0028	0.0000	0.40	0.40
c	Precip Residue Carbon Content	89.0485	0.0000	0.0000	0.0000	0.0000	0.40	0.40
d	Furnace Residue Temp	89.0486	0.0000	0.0001	0.0000	0.0000	50.00	50.00
e	Economizer Residue Temp	89.0483	–0.0000	–0.0002	–0.0001	0.0000	3.27	3.27
f	Precipitator Residue Temp	89.0481	–0.0002	–0.0005	–0.0001	0.0000	3.27	3.27
g	Fuel Temp	89.0500	0.0018	0.0017	0.0010	0.0000	3.16	3.16
h								
i	Avg Air Temp Ent Pulverizer	89.0522	0.0007	0.0041	0.0002	0.0000	3.20	3.20
j	Avg Pulv Tempering Air Temp	89.0487	0.0002	0.0002	0.0000	0.0000	1.12	1.12
k	Pri Air Flow (Ent Pulverizer)	89.0485	–0.0000	–0.0000	–0.0000	0.0000	4.48	4.48
l								
m	FG Temp Ent Sec Air Htr	89.0485	0.0000	0.0000	0.0000	0.0000	3.23	3.23
n	Comb Air Temp Lvg Sec Air Htr	89.0485	0.0000	0.0000	0.0000	0.0000	3.20	3.20
o								
p								
q								
r								
s								
t								
u								
v								
w								
x								
y								
z								
aa								
ab								
ac								

* This uncertainty work sheet is set up for calculating the uncertainty effect on efficiency; however, this sheet can be used for any calculated item such as output, fuel flow, calcium/sulfur ratio, etc.

20	* Base Efficiency	from Item [100] on EFFb form	89.05
21	Precision Index of Result	([13a]^2 + [13b]^2 + ...)^1/2	0.0154
22	Overall Degrees of Freedom	[21]^4/([14a] + [14b] + ...)	33.9763
23	Student t Value	from Table 5.16-1 in Code	2.0313
24	Precision Component of Uncertainty	[21] x [23]	0.0312
25	Positive Bias Limit of Result	([15a]^2 + [15b]^2 + ...)^1/2	0.3752
26	Negative Bias Limit of Result	([16a]^2 + [16b]^2 + ...)^1/2	0.3752
27	Positive Total Uncertainty	([24]^2 + [25]^2)^1/2	0.3765
28	Negative Total Uncertainty	([24]^2 + [26]^2)^1/2	0.3765

NAME OF PLANT	ASME PTC 4 EXAMPLE PROBLEM B.5	UNIT NO.	
TEST NO.	DATE:	LOAD	
TIME START:	END:	CALC BY	
		DATE	
		SHEET	OF

Copyright ASME International
Provided by IHS under license with ASME
No reproduction or networking permitted without license from IHS
Not for Resale

INPUT DATA SHEET 1

	COMBUSTION CALCULATIONS — FORM CMBSTNa				
1	HHV — Higher Heating Value of Fuel, Btu/lbm as fired				11447.6
4	a. Measured Fuel Flow				61901.3
6	Fuel Efficiency, % (estimate initially)				89.05
8	Barometric Pressure, in Hg				29.5
9	Dry Bulb Temperature, F				83.2
10	Wet Bulb Temperature, F				0.0
11	Relative Humidity, %				38.0
15	Gas Temp Lvg AH, F Primary/Secondary or Main	15B	276.16	15A	280.68
16	Air Temp Ent AH, F Primary/Secondary or Main	16B	84.88	16A	85.88
17	O2 in Flue Gas Ent AH, F Primary/Secondary or Main	17B	3.91	15A	3.88
18	O2 in Flue Gas Lvg AH, F Primary/Secondary or Main	18B	5.51	18A	5.59
18C	Primary AH Lkg for Trisector Air Heater, % of Total				0.00
20	Sorbent Rate, Klbm/hr				0.0
	COMBUSTION CALCULATIONS — FORM CMBSTNb				
30	Fuel Ultimate Analysis, % Mass				
	A Carbon				63.68
	B Unburned Carbon in Ash				0.62
	D Sulfur				2.93
	E Hydrogen				4.32
	F Moisture				10.05
	G Moisture (Vapor for gaseous fuel)				0.00
	H Nitrogen				1.24
	I Oxygen				7.32
	J Ash				10.48
	K Volatile Matter				10.00
	L Fixed Carbon				45.00
50	Flue Gas Temperature Entering Primary Air Heater				658.50
	Flue Gas Temperature Entering Secondary Air Heater				660.0
51	Combustion Air Temperature Leaving Primary Air Heater				511.22
	Combustion Air Temperature Leaving Secondary Air Heater				493.89

NAME OF PLANT	ASME PTC 4 EXAMPLE PROBLEM B.5	UNIT NO.	
TEST NO.	DATE	LOAD	
TIME START:	END:	CALC BY	
		DATE	
		SHEET 1	OF

Copyright ASME International
Provided by IHS under license with ASME
No reproduction or networking permitted without license from IHS
Not for Resale

INPUT DATA SHEET 2

COMBUSTION CALCULATIONS — FORM CMBSTNc					
		None			
UNBURNED CARBON & RESIDUE CALCULATIONS — FORM RES					
5		Residue Mass Flow	Klbm/hr		Split, %
	A	Furnace	0.0		15.0
	B	Economizer	0.0		10.0
	C	Precipitator	0.0		75.0
	D		0.0		0.0
	E		0.0		0.0
6		Carbon in Residue, %			
	A	Furnace			0.10
	B	Economizer			4.78
	C	Precipitator			6.75
	D				
	E				
7		Carbon Dioxide in Residue, %			
	A	Furnace			0.00
	B	Economizer			0.00
	C	Precipitator			0.00
	D				
	E				
24		Temperature of Residue, F			
	A	Furnace			2000.0
	B	Economizer			653.8
	C	Precipitator			276.5
	D				
	E				
SORBENT CALCULATION SHEET MEASURED C AND CO2 IN RESIDUE — FORM SRBa					
7A		SO2 in Flue Gas, ppm			0
8		O2 in Flue Gas at location where SO2 is measured, %			0.00
9		SO2 & O2 Basis, Wet [0] or Dry [1]			0
20		Sorbent Products, % Mass			
	A	CaCO3			0.00
	B	Ca(OH)2			0.00
	C	MgCO3			0.00
	D	Mg(OH)2			0.00
	E	H2O			0.00
	F	Inert			0.00
23A		Calcination Fraction			1.00

NAME OF PLANT	ASME PTC 4 EXAMPLE PROBLEM B.5	UNIT NO.	
TEST NO.	DATE	LOAD	
TIME START:	END:	CALC BY	
		DATE	
		SHEET 2	OF

Copyright ASME International
Provided by IHS under license with ASME
No reproduction or networking permitted without license from IHS
Not for Resale

INPUT DATA SHEET 3

	SORBENT CALCULATION SHEET MEASURED C AND CO2 in RESIDUE — FORM SRBb	
	None	
	SORBENT CALCULATION SHEET EFFICIENCY — FORM SRBc	
61	Sorbent Temperature, F	77.0
	EFFICIENCY CALCULATIONS DATA REQUIRED — FORM EFFa	
4	Fuel Temperature	84.0
5	Gas Temperature Entering Hot Air Quality Control Equipment, F	0.0
6	Gas Temperature Leaving Hot Air Quality Control Equipment, F	0.0
31	Auxiliary Equipment Power, MKBtu/hr	0.0
32	Loss Due to Surface Radiation and Convection, % (use only if not calculated)	0.0
33A	Flat Projected Surface Area, ft2	0.0
33B	Average Velocity of Air Near Surface, ft/sec	0.0
33C	Average Surface Temperature, F	0.0
33D	Average Ambient Temperature Near Surface, F	0.0
37A	Average Air Temperature Entering Pulverizers, F	511.4
38A	Average Pulverizer Tempering Air Temperature, F	84.9
40	Primary Air Flow (Entering Pulverizer), Klb/hr	83.2
	Iteration of flue gas split, % primary	0.1
	EFFICIENCY CALCULATIONS — FORM EFFb	
	None	
	EFFICIENCY CALCULATIONS OTHER LOSSES AND CREDITS — FORM EFFc	
Losses, %		
85A	CO in Flue Gas	0.00
85B	Formation of NOx	0.00
85C	Pulverizer Rejects	0.00
85D	Air Infiltration	0.00
85E	Unburned Hydrocarbon in Flue Gas	0.00
85F		
85G		
Losses, MKBtu/hr		
86A	Wet Ash Pit	0.000
86B	Sensible Heat in Recycle Streams — Solid	0.000
86C	Sensible Heat in Recycle Streams — Gas	0.000
86D	Additional Moisture	0.000
86E	Cooling Water	0.000
86F	Air Preheat Coil (Supplied by Unit)	0.000
86G		
86H		
Credits, %		
87A		0.00
Credits, MKBtu/h		
88A	Heat in Additional Moisture (External to Envelope)	0.000

NAME OF PLANT	ASME PTC 4 EXAMPLE PROBLEM B.5	UNIT NO.	
TEST NO.	DATE	LOAD	
TIME START:	END:	CALC BY	
		DATE	
		SHEET 3	OF

Copyright ASME International
Provided by IHS under license with ASME
No reproduction or networking permitted without license from IHS
Not for Resale

INPUT DATA SHEET 4

	PARAMETER	W FLOW Klbm/hr	T TEMPERATURE F	P PRESSURE PSIG
1	FEEDWATER	433774	439.5	1676.6
2	SH SPRAY WATER	26431	312.5	2006.4
3	Ent SH-1 Attemp	0	0.0	0.0
4	Lvg SH-1 Attemp	0	0.0	0.0
6	Ent SH-2 Attemp	0	0.0	0.0
7	Lvg SH-2 Attemp	0	0.0	0.0
	INTERNAL EXTRACTION FLOWS			
9	Blowdown	0		0.0
10	Sat Steam Extraction	0		0.0
11	Sootblowing Steam	0	0.0	0.0
12	SH Steam Extraction 1	0	0.0	0.0
13	SH Steam Extraction 2	0	0.0	0.0
14	Atomizing Steam	0	0	0
	AUXILIARY EXTRACTION FLOWS			
15	Aux Steam 1	0	0.0	0.0
16	Aux Steam 2	0	0.0	0.0
17				
18	MAIN STEAM		1005.4	1517.2
	REHEAT UNITS			
20	REHEAT OUTLET		1001.7	365.0
21	COLD REHEAT ENT ATTEMPERATOR		651.5	369.0
22	RH SPRAY WATER	0	0.0	0.0
23	COLD REHEAT EXTRACTION FLOW	96460		
24	TURB SEAL FLOW & SHAFT LKG	0		
	FW HEATER NO. 1			
25	FW Entering	0	0.0	0.0
26	FW Leaving		0.0	0.0
27	Extraction Steam		0.0	0.0
28	Drain		0.0	0.0
	FW HEATER NO. 2			
30	FW Entering	0	0.0	0.0
31	FW Leaving		0.0	0.0
32	Extraction Steam		0.0	0.0
33	Drain		0.0	0.0

NAME OF PLANT	ASME PTC 4 EXAMPLE PROBLEM B.5	UNIT NO.	
TEST NO.	DATE	LOAD	
TIME START:	END:	CALC BY	
		DATE	
		SHEET 4	OF

Copyright ASME International
Provided by IHS under license with ASME
No reproduction or networking permitted without license from IHS
Not for Resale

of the measured value for sampling bias (89 Btu/lbm) for a combined bias of 0.70%.

A unit output of 565,270 Btu/h was determined in accordance with the description in Section B.4. In that presentation, it was determined that the most critical item was the feedwater flow nozzle. While output has a negligible impact on the uncertainty of efficiency determined by the energy balance method (refer to the Efficiency Uncertainty Work Sheet 2B, Items [15a] and [16a]), it is directly proportional to the uncertainty of efficiency determined by the input-output method. In order to minimize the uncertainty of the output, a calibrated and inspected ASME PTC 6 flow nozzle with a flow straightener was purchased. A nozzle coefficient uncertainty of 0.35% was used. A calibrated differential pressure transmitter with an uncertainty of 0.1% of range was used and an uncertainty of 0.1% was assumed for system error. The total bias for feedwater flow was reduced to 0.38%. It was also noted that the feedwater precision error was high. The controls were tuned and more readings were taken, reducing the precision index of the result to 0.1%. This reduced the total uncertainty of the output result to 0.598%.

The plant oil flow measurement system utilized a square edge orifice with D and D/2 taps. The orifice has a Beta value of 0.734 and installed in a 2 in., schedule 40 pipe. The bias associated with the orifice was considered to be 0.5%.

The bias of the transducer and calibration error were considered to be 0.6% and 1.90% of the full range of the transmitter respectively. The full range of the transmitter was 60 in. wg, thus the combined bias is 0.6708 in. wg.

The oil analysis included the specific gravity, which was determined to have a bias of 0.33% based on the ASTM reproducibility limit.

The following differential pressure readings across the orifice were recorded during a pretest uncertainty analysis: 45.85, 46.85, 47.35, 45.35, 48.85, 47.55, 45.05, 45.08, 58.75, 48.25, and 46.15 in. water, for an average of 46.80 in. wg with a resulting standard deviation of 1.368144.

The Uncertainty Work Sheets were used to calculate the precision and combined biases of the flow measuring system (refer to the Oil Flow Uncertainty Work Sheets).

On Sheet 1, the basic flow equation is provided and all parameters are defined. The parameters to be evaluated in the calculation of the oil flow are:

- differential pressure, in. water
- specific gravity
- orifice diameter
- discharge coefficient

The bias for the discharge coefficient is the only bias not considered above. Note the low Reynolds number of the orifice on Work Sheet 1. A bias of 0.6 + β% = 1.334% is assigned to the coefficient due to the low Reynolds number and an uncalibrated orifice.

Items [27] and [28] on Work Sheet 2 report the overall uncertainty of the measured oil flow. The result is 2.05%, which was deemed to be unacceptable for an input-output test.

In order to reduce the uncertainty of the measured oil flow, a positive displacement flow meter was purchased for the test and calibrated at several viscosities spanning the expected viscosity of the oil. The total bias limit of the result using the calibrated positive displacement meter was determined to be 0.6% of the measured flow based on a meter uncertainty of 0.5%, an uncertainty of 0.33% due to SG, 0.1% due to viscosity and 0.1% assumed system bias. The precision error was reduced to 0.2% by tuning the controls and taking more readings. Thus, by improving the fuel measurement system and test techniques, the total uncertainty for the measured oil flow was reduced to 0.65%. The measured oil flow for the test was determined to be 35,140 lbm/h.

The efficiency by the input-output method is calculated per the following equation.

$$\text{Efficiency} = 100 \times \frac{\text{Output}}{\text{Fuel Flow} \times \text{HHV}}$$

$$= 100 \times \frac{565{,}370{,}000}{35{,}140 \times 17880} = 89{,}967{,}\%$$

The Efficiency by Input-Output Uncertainty Work Sheets were used to calculate the uncertainty of the efficiency determined by the input-output method.

For this test, the overall uncertainty of the efficiency result determined by the input-output method was ±1.07%.

B.6.2 Efficiency by the Energy Balance Method. The uncertainty results and efficiency calculation forms for efficiency calculated by the energy loss method are shown below.

The steam/water side measurements required to determine unit output for an efficiency test by the energy balance method are the same as for the input-output method. However, as can be observed by the uncertainty results below, the influence of the output is insignificant on the efficiency determined by the energy balance method result. Thus, the accuracy of the instrumentation required to determine output is less critical.

Copyright ASME International
Provided by IHS under license with ASME
No reproduction or networking permitted without license from IHS
Not for Resale

Measured fuel flow is not required. Any calculated utilizing fuel flow are based upon the measured output and fuel flow determined from the calculated efficiency.

Fuel sampling requirements are comparable. The fuel must be analyzed for ultimate analysis (elemental constituents) in addition to the higher heating value and density.

Air and flue gas measurements are the principle measurements required in addition to those required for the input-output method. The most common measurements are defined in Section B.5.

The Uncertainty Work Sheets for the OIL FIRING Example Problem lists the measurements required to determine efficiency by the energy balance method for this oil fired boiler example. The combustion and efficiency calculation sheets follow the uncertainty work sheets.

The quality of the test using the input-output method versus the energy balance method is evaluated by comparing the uncertainty of the result for the two methods. Note that even with the precautions of using calibrated feedwater and oil flow nozzles for the input-output test, the uncertainty was 1.07% versus an uncertainty of 0.41% for the energy balance method test with reasonable quality instrumentation.

Copyright ASME International
Provided by IHS under license with ASME
No reproduction or networking permitted without license from IHS Not for Resale

OIL FLOW UNCERTAINTY WORK SHEET NO. 1

	Measured Parameter (from DATA)	1 Average Value (Item [2] on Form PREC)	2 Standard Deviation (Item [3] on Form PREC)	Bias Sheet No.	3 Total Positive Bias Limit (Item [2] on Form BIAS)	4 Total Negative Bias Limit (Item [3] on Form BIAS)	5 No. of Readings (Item [1] on Form PREC)	6 Precision Index (([2]^2)/[5])^1/2	7 Degrees of Freedom [5] – 1	8 Percent Change	9 Incremental Change* [8] x [1]/100
a	Differential Press, in. Wg	46.80000	1.3681		0.6708	0.6708	12.0000	0.3949	11.0000	1.0000	0.4680
b	Specific Gravity	0.93000	0.0000		0.0031	0.0031	0.0000	0.0000	0.0000	1.0000	0.0093
c	Discharge Coefficient, C	0.68807	0.0000		0.0092	0.0092	0.0000	0.0000	0.0000	1.0000	0.0069
d	Orifice Diameter, d	1.51718	0.0000		0.0076	0.0076	0.0000	0.0000	0.0000	1.0000	0.0152
e											
f											
g											
h											
i											
j											
k											
l											
m	From ASME MFC-3M-1989										
n	qm = 0.0997*C*E*Y*Fa*d^2*(Rho*h)^.5 (lbm/sec) = 9.761										
o	C = Discharge Coefficient, C = 5959 + 0.0312 B^2.1 – 0.1840 B^8 + 0.0390 B^4/(1 – B^4) – 0.01584 B^3 + 91.71 B^2.5 ReD^ – 0.75 = 0.6880725										
p	E = Approach Factor = 1/(1 – Beta^4)^.5 = 1.870										
q	Y = Compressibility Factor = 1.0 for liquids										
r	Fa = Thermal Expansion Factor = 1.0 at given temperature										
s	d = Orifice diameter = Beta * Pipe inside Diameter (inches) = Beta *D = 1.5172										
t	Beta (B) = 0.734										
u	Pipe (D) = 2 in. Schedule 40 = 2.067										
v	Rho = Density of fluid = 62.32 * S.G. (lbm/ft^3)										
w	h = Head across orifice (inches of water) = 46.80										
x	Re = 4 * m/(Pi * Vis * D) m = 10.0000 Re = 4162.05										
y	Vis = Viscosity (lbm/sec/in) = 135 SSU @ 210F = 0.00148										
z	SG = Specific Gravity = 0.93										
aa											
ab											
ab											

This work sheet is set up for constant value parameters.
See Section 5.2 of the Code for calculation of average value, degrees of freedom, and precision index for integrated average value parameters.

* The value used for incremental change can be any increment of the average value.
The recommended increment is 1.0% (0.01 times the average value).
If the average value of the measured parameter is zero, use any small incremental change.
It is important to note that the incremental change must be in the same units as the average value.

NAME OF PLANT OIL FIRING EXAMPLE PROBLEM	UNIT NO.
TEST NO. DATE	LOAD
TIME START: END:	CALC BY
	DATE
	SHEET OF

Copyright ASME International
Provided by IHS under license with ASME
No reproduction or networking permitted without license from IHS
Not for Resale

OIL FLOW UNCERTAINTY WORK SHEET NO. 2

	Measured Parameter	10 Recalc Output *	11 Absolute Sensitivity Coefficient ([10] – [20])/[9]	12 Relative Sensitivity Coefficient [11] x [1]/[20]	13 Precision Index of Result Calculation [11] x [6]	14 Overall Deg of Freedom Contribution ([11] x [6])^4/[7]	15 Positive Bias Limit of Result [3]* [11]	16 Negative Bias Limit of Result [4]* [11]
a	Differential Press, in. Wg	9.810	0.1040	0.4988	0.0411	2.5906E – 07	0.0698	0.0698
b	Specific Gravity	9.810	5.2350	0.4988	0.0000	0.0000E + 00	0.0161	0.0161
c	Discharge Coefficient, C	9.859	14.1867	1.0000	0.0000	0.0000E + 00	0.1302	0.1302
d	Orifice Diameter, d	9.958	12.9323	2.0100	0.0000	0.0000E + 00	0.0981	0.0981
e								
f								
g								
h								
i								
j								
k								
l								
m								
n								
o								
p								
q								
r								
s								
t								
u								
v								
w								
x								
y								
z								
aa								
ab								
ab								

* This uncertainty work sheet is set up for calculating the uncertainty effect on efficiency; however, this sheet can be used for any calculated item such as output, fuel flow, calcium/sulfur ratio, etc.

20	* Base Oil Flow	per equation on Sheet 1, lbm/sec	9.761
21	Precision Index of Result	([13a]^2 + [13b]^2 + ...)^1/2	0.0411
22	Overall Degrees of Freedom	[21]^4/([14a] + [14b] + ...)	11.0000
23	Student t Value	from Table 5.16-1 in Code	2.2010
24	Precision Component of Uncertainty	[21] x [23]	0.0904
25	Positive Bias Limit of Result	([15a]^2 + [15b]^2 + ...)^1/2	0.1781
26	Negative Bias Limit of Result	([16a]^2 + [16b]^2 + ...)^1/2	0.1781
27	Positive Total Uncertainty	([24]^2 + [25]^2)^1/2	0.1997
28	Negative Total Uncertainty	([24]^2 + [26]^2)^1/2	0.1997

NAME OF PLANT OIL FIRING EXAMPLE PROBLEM	UNIT NO.
TEST NO. DATE	LOAD
TIME START: END:	CALC BY
	DATE
	SHEET OF

Copyright ASME International
Provided by IHS under license with ASME
No reproduction or networking permitted without license from IHS
Not for Resale

EFFICIENCY BY INPUT-OUTPUT UNCERTAINTY WORK SHEET NO. 1

	Measured Parameter (from DATA)	1 Average Value (Item [2] on Form PREC)	2 Standard Deviation (Item [3] on Form PREC)	Bias Sheet No.	3 Total Positive Bias Limit (Item [2] on Form BIAS)	4 Total Negative Bias Limit (Item [3] on Form BIAS)	5 No. of Readings (Item [1] on Form PREC)	6 Precision Index (([2]^2)/[5])^1/2	7 Degrees of Freedom [5] – 1	8 Percent Change	9 Incremental Change* [8] × [1]/100
a	Output, 1E6 Btu/hr	565.27	0.0000		3.3803	3.0807	0.0000	0.6161	19.6700	1.0000	5.6527
b	Fuel Flow, klbm/hr	35.14	0.0000		0.2179	0.2179	0.0000	0.0703	30.0000	1.0000	0.3514
c	Fuel Higher Heating Value	17880.00	0.0000		125.1600	125.1600	0.0000	0.0000	0.0000	1.0000	178.8000
d											
e											
f											
g											
h											
i											
j											
k											
l											
m											
n											
o											
p											
q											
r											
s											
t											
u											
v											
w											
x											
y											
z											
aa											
ab											
ab											

This work sheet is set up for constant value parameters.
See Section 5.2 of the Code for calculation of average value, degrees of freedom, and precision index for integrated average value parameters.

* The value used for incremental change can be any increment of the average value.
The recommended increment is 1.0% (0.01 times the average value).
If the average value of the measured parameter is zero, use any small incremental change.
It is important to note that the incremental change must be in the same units as the average value.

NAME OF PLANT OIL FIRING EXAMPLE PROBLEM	UNIT NO.
TEST NO. DATE	LOAD
TIME START: END:	CALC BY
	DATE
	SHEET OF

Copyright ASME International
Provided by IHS under license with ASME
No reproduction or networking permitted without license from IHS
Not for Resale

EFFICIENCY BY INPUT-OUTPUT UNCERTAINTY WORK SHEET NO. 2

	Measured Parameter	10 Recalc Efficiency *	11 Absolute Sensitivity Coefficient ([10] − [20])/[9]	12 Relative Sensitivity Coefficient [11] × [1]/[20]	13 Precision Index of Result Calculation [11] × [6]	14 Overall Deg of Freedom Contribution ([11] × [6])^4/[7]	15 Positive Bias Limit of Result [3]* [11]	16 Negative Bias Limit of Result [4]* [11]
a	Output, 1E6 Btu/hr	90.8674	0.1592	1.0000	0.0981	4.7016E − 06	0.5380	0.5380
b	Fuel Flow, klbm/hr	89.0769	−2.5349	−0.9901	−0.1782	3.3578E − 05	−0.5523	−0.5523
c	Fuel Higher Healing Value	89.0769	−0.0050	−0.9901	0.0000	0.0000E + 00	−0.6235	−0.6235
d								
e								
f								
g								
h								
i								
j								
k								
l								
m								
n								
o								
p								
q								
r								
s								
t								
u								
v								
w								
x								
y								
z								
aa								
ab								
ab								

* This uncertainty work sheet is set up for calculating the uncertainty effect on efficiency; however, this sheet can be used for any calculated item such as output, fuel flow, calcium/sulfur ratio, etc.

20	* Base Efficiency	100 × [1a]/([1b] × [1c])	89.9677
21	Precision Index of Result	([13a]^2 + [13b]^2 + ...)^1/2	0.2034
22	Overall Degrees of Freedom	[21]^4/([14a] + [14b] + ...)	44.6781
23	Student t Value	from Table 5.16-1 in Code	1.9600
24	Precision Component of Uncertainty	[21] × [23]	0.3986
25	Positive Bias Limit of Result	([15a]^2 + [15b]^2 + ...)^1/2	0.9916
26	Negative Bias Limit of Result	([16a]^2 + [16b]^2 + ...)^1/2	0.9916
27	Positive Total Uncertainty	([24]^2 + [25]^2)^1/2	1.0687
28	Negative Total Uncertainty	([24]^2 + [26]^2)^1/2	1.0687

NAME OF PLANT OIL FIRING EXAMPLE PROBLEM	UNIT NO.
TEST NO. DATE	LOAD
TIME START: END:	CALC BY
	DATE
	SHEET OF

Copyright ASME International
Provided by IHS under license with ASME
No reproduction or networking permitted without license from IHS
Not for Resale

UNCERTAINTY WORK SHEET NO. 1

MEASURED PARAMETER	AVE VAL	STD DEV	NO RDGS	PREC INDEX	DEG FREE	% CHANGE	INCR CHANGE
AIR TEMP ENT ENT AH	84.88	0.47	10	0.15	9	1.00	0.85
GAS TEMP ENT AH	658.50	1.87	10	0.59	9	1.00	6.59
GAS TEMP LVG AH (MEAS)	276.16	0.28	10	0.09	9	1.00	2.76
SURF RAD. & CONV. LOSS, 1E6 BT	1.77	0.00	0	0.00	0	1.00	0.02
UNIT OUTPUT, 1E6 BTU/HR	565.27	0.00	0	2.33	20	1.00	5.65
02 ENT AH, %	3.90	0.13	1	0.04	9	1.00	0.04
02 LVG AH, %	5.50	0.44	1	0.14	9	1.00	0.06
BAROMETRIC PRESS, IN HG	29.50	0.00	20	0.01	19	1.00	0.30
MASS FRACTION OF REFUSE ENT AH	0.75	0.00	0	0.00	0	1.00	0.01
WET ASH PIT LOSS, 1E6 BTU/HR	0.63	0.00	0	0.00	0	1.00	0.01
DRY BULB TEMP	83.17	1.18	6	0.48	5	1.00	0.83
RELATIVE HUMIDITY, %	38.00	0.91	6	0.37	5	1.00	0.38
HIGHER HEATING VALUE, BTU/LBM	17880.00	0.00	1	0.00	0	1.00	178.80
% CARBON IN FUEL	88.90	0.00	1	0.00	0	1.00	0.89
% HYDROGEN IN FUEL	9.20	0.00	1	0.00	0	1.00	0.09
% SULFUR IN FUEL	1.00	0.00	1	0.00	0	1.00	0.01
% OXYGEN IN FUEL	0.55	0.00	1	0.00	0	1.00	0.01
% NITROGEN IN FUEL	0.35	0.00	1	0.00	0	1.00	0.00
FUEL TEMPERATURE	200.00	2.83	8	1.00	7	1.00	2.00

NAME OF PLANT:	UNIT NO. 1
TEST NO: 1 DATE 05/29/96	LOAD 100%
TIME START: 13:00 END: 17:00	CALC BY tch
ASME PTC4 EXAMPLE PROBLEM	DATE 10/08/96
OIL FIRING	SHEET OF

Copyright ASME International
Provided by IHS under license with ASME
No reproduction or networking permitted without license from IHS
Not for Resale

UNCERTAINTY WORK SHEET NO. 2A
Efficiency

MEASURED PARAMETER	AVE VALUE	ABS SENS COEFF	REL SENS COEFF	PREC INDEX MEAS	+BIAS LIMIT	–BIAS LIMIT
AIR TEMP ENT ENT AH	84.9	0.02443	0.02305	0.15	4.03	4.03
GAS TEMP ENT AH	658.5	0.00000	0.00000	0.59	6.77	6.77
GAS TEMP LVG AH (MEAS)	276.2	–0.02694	–0.08267	0.09	8.85	8.85
SURF RAD. & CONV. LOSS, 1E6 BT	1.8	–0.15840	–0.00312	0.00	0.35	0.35
UNIT OUTPUT, 1E6 BTU/HR	565.3	0.00067	0.00419	2.33	9.47	9.55
02 ENT AH, %	3.9	0.00436	0.00019	0.04	0.21	0.21
02 LVG AH, %	5.5	–0.29527	–0.01805	0.14	0.25	0.25
BAROMETRIC PRESS, IN HG	29.5	0.00275	0.00090	0.01	0.32	0.30
MASS FRACTION OF REFUSE ENT AH	0.8	0.00000	0.00000	0.00	0.15	0.15
WET ASH PIT LOSS, 1E6 BTU/HR	0.6	–0.15873	–0.00111	0.00	0.95	0.32
DRY BULB TEMP	83.2	–0.00265	–0.00245	0.48	1.03	1.12
RELATIVE HUMIDITY, %	38.0	–0.00211	–0.00089	0.37	0.71	0.71
HIGHER HEATING VALUE, BTU/LBM	17880.0	0.00053	0.10560	0.00	172.00	172.00
% CARBON IN FUEL	88.9	–0.04038	–0.03990	0.00	2.66	2.66
% HYDROGEN IN FUEL	9.2	–0.65750	–0.06723	0.00	0.31	0.31
% SULFUR IN FUEL	1.0	–0.01400	–0.00016	0.00	0.10	0.10
% OXYGEN IN FUEL	0.6	0.01455	0.00009	0.00	0.10	0.10
% NITROGEN IN FUEL	0.4	0.0000	0.00000	0.00	0.17	0.17
FUEL TEMPERATURE	200.0	0.00273	0.00606	1.00	8.59	8.59

NAME OF PLANT:	UNIT NO. 1
TEST NO: 1 DATE 05/29/96	LOAD 100%
TIME START: 13:00 END: 17:00	CALC BY tch
ASME PTC4 EXAMPLE PROBLEM	DATE 10/08/96
OIL FIRING	SHEET OF

Copyright ASME International
Provided by IHS under license with ASME
No reproduction or networking permitted without license from IHS
Not for Resale

UNCERTAINTY WORK SHEET NO. 2B
Efficiency

MEASURED PARAMETER	RECALC PARAM	ABS SENS COEFF	REL SENS COEFF	TOTAL DEG FR CONTR	PREC INDEX RESULT	+BIAS LIMIT RESULT	−BIAS LIMIT RESULT
AIR TEMP ENT ENT AH	90.001	0.02443	0.02305	0.0000	0.0037	0.0985	0.0985
GAS TEMP ENT AH	89.980	0.00000	0.00000	0.0000	0.0000	0.0000	0.0000
GAS TEMP LVG AH (MEAS)	89.906	−0.02694	−0.08267	0.0000	−0.0024	−0.2384	−0.2384
SURF RAD. & CONV. LOSS, 1E6 BT	89.977	−0.15840	−0.00312	0.0000	0.0000	−0.0554	−0.0554
UNIT OUTPUT, 1E6 BTU/HR	89.984	0.00067	0.00419	0.0000	0.0016	0.0063	0.0064
02 ENT AH, %	89.980	0.00436	0.00019	0.0000	0.0002	0.0009	0.0009
02 LVG AH, %	89.964	−0.29527	−0.01805	0.0000	−0.0413	−0.0723	−0.0723
BAROMETRIC PRESS, IN HG	89.981	0.00275	0.00090	0.0000	0.0000	0.0009	0.0008
MASS FRACTION OF REFUSE ENT AH	89.980	0.00000	0.00000	0.0000	0.0000	0.0000	0.0000
WET ASH PIT LOSS, 1E6 BTU/HR	89.979	−0.15873	−0.00111	0.0000	0.0000	−0.1500	−0.0500
DRY BULB TEMP	89.978	−0.00265	−0.00245	0.0000	−0.0013	−0.0027	−0.0030
RELATIVE HUMIDITY, %	89.979	−0.00211	−0.00089	0.0000	−0.0008	−0.0015	−0.0015
HIGHER HEATING VALUE, BTU/LBM	90.075	0.00053	0.10560	0.0000	0.0000	0.0914	0.0914
% CARBON IN FUEL	89.944	−0.04038	−0.03990	0.0000	0.0000	−0.1075	−0.1075
% HYDROGEN IN FUEL	89.920	−0.65750	−0.06723	0.0000	0.0000	−0.2063	−0.2063
% SULFUR IN FUEL	89.980	−0.01400	−0.00016	0.0000	0.0000	−0.0014	−0.0014
% OXYGEN IN FUEL	89.980	0.01455	0.00009	0.0000	0.0000	0.0015	0.0015
% NITROGEN IN FUEL	89.980	0.00000	0.00000	0.0000	0.0000	0.0000	0.0000
FUEL TEMPERATURE	89.986	0.00273	0.00606	0.0000	0.0027	0.0234	0.0234

TOTAL UNCERTAINTY RESULTS
Efficiency

	PCT EFF	PCT AVE
BASE EFFICIENCY	89.98	
PRECISION INDEX OF RESULT	0.04	
OVERALL DEGREES OF FREEDOM	9	
STUDENTS t VALUE	2.25	
PRECISION COMPONENT OF UNCERTAINTY	0.09	
POSITIVE BIAS LIMIT OF RESULT	0.40	0.45
NEGATIVE BIAS LIMIT OF RESULT	0.37	0.42
POSITIVE TOTAL UNCERTAINTY	0.41	0.46
NEGATIVE TOTAL UNCERTAINTY	0.39	0.43

NAME OF PLANT:	UNIT NO. 1
TEST NO: 1 DATE 05/29/96	LOAD 100%
TIME START: 13:00 END: 17:00	CALC BY tch
ASME PTC4 EXAMPLE PROBLEM	DATE 10/08/96
OIL FIRING	SHEET OF

Copyright ASME International
Provided by IHS under license with ASME
No reproduction or networking permitted without license from IHS
Not for Resale

COMBUSTION CALCULATIONS

	DATA REQUIRED				
1	HHV, BTU/LBM AS FIRED	17880.00000	9	DRY BULB TEMP, F	83.17000
2	UBC IN REFUSE, LB/100 LB FUEL	0.00000	10	WET BULB TEMP, F	0.00000
3	FUEL FLOW, KLB/HR	35.13480	11	RELATIVE HUMIDITY, %	38.00000
5	OUTPUT, 1E6 BTU/HR	565.26500	12	SUM ADD MOISTURE, KLB/HR	0.00000
6	FUEL EFFICIENCY, %	89.98023	13	ADD MOISTURE, LB/100 LB FUEL	0.00000
7	MOIS IN AIR, LB/LB DA	0.00930	14	ADD MOISTURE, LB/10 KBTU	0.00000
8	BAROMETRIC PRESS, in Hg	29.50000	15	MASS ASH, LB/10KBTU	0.00000
	SORBENT DATA (ENTER 0 IF SORBENT NOT USED)				
20	SORBENT RATE, KLB/HR	0.00000	23	SULFUR CAPTURE, LB/LB SULFUR FUEL	0.00000
21	CO2 FROM SORBENT, LB/100 LB SORB	0.00000	24	SPENT SORBENT, LB/100 LB SORB	0.00000
22	H2O FROM SORBENT, LB/100 LB SORB	0.00000	25	SORB/FUEL RATIO, LB SORB/LB FUEL	0.00000

COMBUSTION PRODUCTS

30	ULTIMATE ANALYSIS % MASS		31 THEO AIR LB/100 LB FUEL [30] × K		32 DRY PROD COMB MOL/100 LB FUEL [30]/K		33 WET PROD COMB MOL/100 LB FUEL [30]/K		34 H2O FUEL LB/10KB [30] × K × 100 [1]	
A	C	88.90								
B	CU	0.00								
C	CB	88.90	11.51	1023.239	12.01	7.40216				
D	S	1.00	4.32	4.320	32.064	0.03119				
E	H2B	9.20	34.29	315.468			2.016	4.56349	8.937	0.45985
F	H2O	0.00					18.016	0.00000	1.0	0.00000
G	H2Ov	0.00					18.016	0.00000	1.0	0.0000
H	N2	0.35			28.016	0.01249				
I	G2	0.55	−4.32	−2.376						
J	ASM	0.00								
K		0.00								
L		0.00								
M	TOTAL	100.00	31	1340.651	32	7.44585	33	4.56349	34	0.45985

35	TOTAL THEO AIR CHECK, LB/10KBTU	[31M] + [30B] × 11.51 + [30L] × 34.29/	7.49805

CORRECTIONS FOR SORBENT REACTIONS AND SULFUR CAPTURE

40	CO2 FROM SORB, LB/100 LB FUEL	[21] × [25]	0.00000
41	H2O FROM SORB, LB/100 LB FUEL	[22] × [25]	0.00000
42	SO2 REDUCTION, MOL/100 LB FUEL	[32D] × [23]	0.00000
43	DRY PROD COMB, MOL/100 LB FUEL	[32M] + [40] / 44.01 − [42]	7.44585
44	WET PROD COMB, MOL/100 LB FUEL	[33M] + [41] / 18.016 + [43]	12.00934
46	THEO AIR CORR, LB/100 LB FUEL	[31M] + 2.16 × [30D] × [23]	1340.65100
47	THEO AIR CORR, MOL/100 LB FUEL	[46] / 28.966	46.28361
48	THEO AIR CORR, LB/10KBTU	[46] / ([1]/100)	7.49805
49	WET GAS FROM FUEL, LB/10KB	(100 − [30J] − [30B] − [30L] − [30D] × [23])/([1]/100)	0.55928

NAME OF PLANT:	UNIT NO. 1
TEST NO: 1 DATE 05/29/96	LOAD 100%
TIME START: 13:00 END: 17:00	CALC BY tch
ASME PTC4 EXAMPLE PROBLEM	DATE 10/08/96
OIL FIRING	SHEET OF

Copyright ASME International
Provided by IHS under license with ASME
No reproduction or networking permitted without license from IHS Not for Resale

COMBUSTION CALCULATIONS

	LOCATION				ENT AH	LVG AH				
					1	2	0	0	0	0
50	O2, %	BELOW m = MEASURED 1 = LOCATION			3.9000	5.5000	0.0000	0.0000	0.0000	0.0000
51	CO, %	LOC CORR COm x (20.95 – O21) / (20.95 – O2m)			0.0000	0.0000	0.0000	0.0000	0.0000	0.0000
59	NOX, %	LOC CORR NOXm x (20.95 – O21) / (20.95 – O2m)			0.0000	0.0000	0.0000	0.0000	0.0000	0.0000
52	O2C, %	([50] – ([51] – [59])/2) / (1 – ([51] – [59])/200))			3.9000	5.5000	0.0000	0.0000	0.0000	0.0000
53	MOISTURE IN AIR		0	[7] x 1.608	0.0000	0.0000	0.0000	0.0000	0.0000	0.0000
54	DRY/WET PRODUCTS		[43]	[44]	7.4458	7.4458	0.0000	0.0000	0.0000	0.0000
55	ADDITIONAL MOISTURE		0	[13]/18.016	0.0000	0.0000	0.0000	0.0000	0.0000	0.0000
56	[47] x (0.7905 + [53])				36.5872	36.5872	0.0000	0.0000	0.0000	0.0000
57	SUMMATION [54] + [55] + [56]				44.0330	44.0330	0.0000	0.0000	0.0000	0.0000
58	20.95 – [52] x (1 + [53])				17.0500	15.4500	0.0000	0.0000	0.0000	0.0000
60	EXCESS AIR, %	100 x [52] x [57] / [47] / [58]			21.7616	33.8677	0.0000	0.0000	0.0000	0.0000
	O2, CO2, SO2 WHEN EXCESS AIR KNOWN									
61	MOLS GAS CORR FACTOR	1 / (1 – ([51] + [59]) / 200)			1.0000	1.0000	0.0000	0.0000	0.0000	0.0000
62	DRY	[47] x (0.7905 + [60] / 100)			46.6593	52.2624	0.0000	0.0000	0.0000	0.0000
63	WET	[47] x (0.7905 + [53] + (1 + [53]) x [60] / 100)			0.0000	0.0000	0.0000	0.0000	0.0000	0.0000
64	DRY GAS, MOL/100 LB FUEL	[61] x ([43] + [62])			54.1051	59.7082	0.0000	0.0000	0.0000	0.0000
65	WET GAS, MOL/100 LB FUEL	[61] x ([44] + [63])			0.0000	0.0000	0.0000	0.0000	0.0000	0.0000
66	O2, %	[60] x [47] x 0.2095 /	[64] or [65]	+ [51] / 2 – [59] / 2	3.9000	5.5000	0.0000	0.0000	0.0000	0.0000
67	CO2, %	([30C]/0.1201+[40]/44.01)/	[64]or[65]	–[51]+[59]	13.6811	12.3972	0.0000	0.0000	0.0000	0.0000
68	SO2, %	(1–[23])x[30D]/0.32064/	[64]or[65]		0.0576	0.0522	0.0000	0.0000	0.0000	0.0000
	FLUE GAS PRODUCTS, LBM/10KBTU									
69	DRY AIR	(1 + [60] / 100) x [48]			9.1297	10.0375	0.0000	0.0000	0.0000	0.0000
70	WET GAS FROM FUEL	[49]			0.5593	0.5593	0.0000	0.0000	0.0000	0.0000
71	CO2 FROM SORBENT	[40] / ([1] / 100)			0.0000	0.0000	0.0000	0.0000	0.0000	0.0000
72	MOISTURE IN AIR	[7] x [69]			0.0849	0.0934	0.0000	0.0000	0.0000	0.0000
73	WATER FROM SORBENT	[41] / ([1] / 100)			0.0000	0.0000	0.0000	0.0000	0.0000	0.0000
74	ADDITIONAL MOISTURE	[14]			0.0000	0.0000	0.0000	0.0000	0.0000	0.0000
75	TOTAL WET GAS	[69] + [70] + [71] + [72] + [73] + [74]			9.7739	10.6901	0.0000	0.0000	0.0000	0.0000
76	H2O IN WET GAS	[34M] + [72] + [73] + [74]			0.5448	0.5532	0.0000	0.0000	0.0000	0.0000
77	DRY GAS	[75] – [76]			9.2292	10.1369	0.0000	0.0000	0.0000	0.0000
78	H2O IN WET GAS, % MASS	100 x [76] / [75]			5.5736	5.1749	0.0000	0.0000	0.0000	0.0000
79	REFUSE, LB/ LB TOTAL REFUSE AT EACH LOCATION				0.7500	0.7500	0.0000	0.0000	0.0000	0.0000
80	REFUSE, LB/10KBTU	([30J] + [2] + [24]) / ([1] / 100)			0.0000	0.0000	0.0000	0.0000	0.0000	0.0000
81	REFUSE IN WET GAS, LB/LB WET GAS	[79] x [80] / [75]			0.0000	0.0000	0.0000	0.0000	0.0000	0.0000
82	INFILTRATION, % GAS ENTERING	100 x ([75L] – [75E]) / [75E]			0.0000	9.3735	0.0000	0.0000	0.0000	0.0000
	GAS TEMPERATURE CORRECTION FOR INFILTRATION									
83	GAS TEMP LVG (INCL LKG), F	[15]			0.0000	276.1600	0.0000	0.0000	0.0000	0.0000
84	AIR TEMP ENT, F	[16]			84.8800	0.0000	0.0000	0.0000	0.0000	0.0000
85	H AIR LVG, BTU/LBM	T = [83], H2O = [7]			0.0000	48.3948	0.0000	0.0000	0.0000	0.0000
86	H AIR ENT, BTU/LBM	T = [84], H2O = [7]			0.0000	1.9074	0.0000	0.0000	0.0000	0.0000
87	Cpg, BTU/LBM F	T = [83], H2O = [78E], REF = [81E]			0.0000	0.2532	0.0000	0.0000	0.0000	0.0000
88	CORR GAS OUT TEMP	[83] + ([82]/100 x ([85] – [86])/[87])			0.0000	293.3676	0.0000	0.0000	0.0000	0.0000

	AIR, GAS, FUEL, & REFUSE MASS FLOW RATES, KLBM/HR					
90	INPUT FROM FUEL, 1E6 BTU (FROM EFF FORM)	628.2	92	REFUSE RATE, KLB/HR	[80] x [90] / 10	0.0
91	FUEL RATE, KLB/HR 1000 x [90] / [1]	35.1	93	WET FLUE GAS, KLB/HR	[75] x [90] / 10	614.0
95	EXCESS AIR LVG BLR, %	21.8	96	TOTAL AIR TO BLR, KLB/HR	([69] + [72]) x [90] / 10	578.9

NAME OF PLANT:	UNIT NO. 1
TEST NO: 1 DATE 05/29/96	LOAD 100%
TIME START: 13:00 END: 17:00	CALC BY tch
ASME PTC4 EXAMPLE PROBLEM	DATE 10/08/96
OIL FIRING	SHEET OF

Copyright ASME International
Provided by IHS under license with ASME
No reproduction or networking permitted without license from IHS Not for Resale

FORM Effa EFFICIENCY CALCULATIONS
Data Required

	TEMPERATURE, F				
1	REFERENCE TEMPERATURE	77.0	1A	ENTH WATER (32 F REF)	45.00
2	AVE ENT AIR TEMP	84.9	2A	ENTH DRY AIR	1.89
			2B	ENTH WATER VAPOR	3.51
3	AVE EXIT GAS T (EXCL LKG)	293.4	3A	ENTH DRY GAS	51.68
			3B	ENTH STEAM @ 1 PSIA	1192.61
			3C	ENTH WATER VAPOR	97.51
4	FUEL TEMPERATURE	200.0	4A	ENTH FUEL	56.68
	HOT AIR QUALITY CONTROL EQUIPMENT				
5	HAQC ENT GAS TEMP	0.0	5A	ENTH WET GAS	0.00
6	HACQ LVG GAS TEMP	0.0	6A	ENTH WET GAS	0.00
			6B	ENTH WET AIR	0.00
			6C	ENTH WET AIR @ T = [3]	0.00

	RESULTS FROM COMBUSTION CALCULATIONS FORM CMBSTN					
10	DRY GAS WEIGHT	[77]	9.22919	18	UNBURNED CARBON, % [2]	0.00
11	DRY AIR WEIGHT	[69]	9.12975	19	HHV, BTU/LB AS FIRED [1]	17880.00
12	WATER FROM H2	FUEL [34E]	0.45985		**HOT AQC EQUIPMENT**	
13	WATER FROM H2O	FUEL [34F]	0.00000	20	WEST GAS ENTERING [75E]	0.00
14	WATER FROM H2OV	FUEL [34G]	0.00000	21	H2O IN WET GAS, % [76E]	0.00
15	MOIS IN AIR, LB/LB DA	[7]	0.00930	22	WET GAS LEAVING [75L]	0.00
16	MOIS IN AIR, LB/10 KB	[72]	0.08492	23	REFUSE IN WET GAS, % [81E]	0.00
17	FUEL RATE EST, Klb/HR	[3]	35.1			
	MISCELLANEOUS					
30	UNIT OUTPUT,	MKBTU/HR	565.3	31	AUX EQUIP POWER, MKBTU/HR	0.00
32	FEEDWATER TEMP,	F	0.0	32A	ENTHALPY FEEDWATER, BTU/LB	0.00
33	FEEDWATER PRESS,	PSIG	0.0	34	DRUM PRESS, PSIG	0.00
35	BLOWDOWN FLOW,	KLB/HR	0.0	35A	ENTHALPY BLOWDOWN, BTU/LB	0.00
36	SB STM FLOW (UNIT),	KLB/HR	0.0			

NAME OF PLANT:	UNIT NO. 1
TEST NO: 1 DATE 05/29/96	LOAD 100%
TIME START: 13:00 END: 17:00	CALC BY tch
ASME PTC4 EXAMPLE PROBLEM	DATE 10/08/96
OIL FIRING	SHEET OF

Copyright ASME International
Provided by IHS under license with ASME
No reproduction or networking permitted without license from IHS
Not for Resale

FORM EFFb EFFICIENCY CALCULATIONS

	LOSSES % BASIS (ENTER RESULT IN % COL)			MKB	%
40	DRY GAS	[10] x [3A]	/ 100	29.96	4.7698
41	WATER FROM H2 FUEL	[12] x ([3B] – [1A])	/ 100	33.15	5.2772
42	WATER FROM H20 FUEL	[13] x ([3B] – [1A])	/ 100	0.00	0.000
43	WATER FROM H20V FUEL	[14] x [3C]	/ 100	0.00	0.0000
44	MOISTURE IN AIR	[16] x [3C]	/ 100	0.52	0.0828
45	UNBURNED CARBON IN REF	[18] x 14500 / [19]		0.00	0.0000
46	SENSIBLE HEAT OF REF	from Form REF or REFS		0.00	0.0000
47	HOT AQC EQUIPMENT	refer to text		0.00	0.0000
48	OTHER LOSSES, % BASIS	from Form EFFc	[85]	0.00	0.0000
54	SUMMATION LOSSES, % BASIS			63.64	10.1298

	LOSSES, MKBTU/HR BASIS (ENTER RESULT IN MKB COL)			MKB	%
55	SURF RADIATION & CONV	refer to text		1.77	0.2824
56	BLOWDOWN	[35] x ([35A] – [32A])	/ 1000	0.00	0.0000
57	SOOTBLOWING STEAM	[36] x ([3B] – [32A])	/ 1000	0.00	0.0000
58	SORBENT CALC/DEHYD	from Form SRBc	[77]	0.00	0.0000
59	WATER FROM SORBENT	from Form SRBc	[65]	0.00	0.0000
60	OTHER LOSSES	from Form EFFc	[86]	0.63	0.1003
62	SUM LOSSES, MKBTU BASIS			2.40	0.3827

	CREDITS, % BASIS (ENTER RESULT IN % COL)			MKB	%
63	ENTERING DRY AIR	[11] x [2A]	/ 100	1.09	0.1728
64	MOISTURE IN AIR	[16] x [2B]	/ 100	0.02	0.0030
65	SENSIBLE HEAT IN FUEL	100 x [4A] / [19]		1.99	0.3170
66	SULFATION	from Form SRBc	[80]	0.00	0.0000
67	OTHER CREDITS, % BASIS	from Form EFFc	[87]	0.00	0.0000
71	SUM CREDITS, % BASIS			3.10	0.4927

	CREDITS, MKBTU/HR BASIS (ENTER RES IN MKB COL)			MKB	%
72	AUX EQUIPMENT POWER	[31]		0.00	0.0000
73	SENS HEAT FROM SORB	from Form SRBc	[85]	0.00	0.0000
74	OTHER CREDITS	from Form EFFc	[88]	0.00	0.0000
75	SUM CREDITS, MKBTU BASIS			0.00	0.0000

80	FUEL EFF. %	(100 – [54] + [71]) x [30] / ([30] + [62] – [75])		89.9802
81	INPUT FROM FUEL, MKBTU	100 x [30] / [80]		628.2102
82	FUEL RATE, KLB/HR	1000 x [81] / [19]		35.1348

NAME OF PLANT:	UNIT NO. 1
TEST NO: 1 DATE 05/29/96	LOAD 100%
TIME START: 13:00 END: 17:00	CALC BY tch
ASME PTC4 EXAMPLE PROBLEM	DATE 10/08/96
OIL FIRING	SHEET OF

Copyright ASME International
Provided by IHS under license with ASME
No reproduction or networking permitted without license from IHS
Not for Resale

FORM EFFc EFFICIENCY CALCULATIONS
Other Losses and Credits

	T/E	LOSSES % BASIS (ENTER RESULT IN % COL)	MKB	%
85A		CO IN FLUE GAS	0.00	0.0000
85B		PULVERIZER REJECTS	0.00	0.0000
85C		AIR INFILTRATION	0.00	0.0000
85D		UNB HYDROGEN IN FLUE GAS	0.00	0.0000
85E		UNB HYDROGEN IN REFUSE	0.00	0.0000
85F		UNB HYDROCARBONS	0.00	0.0000
85G		MISC LOSSES, % — EFFc Item	0.00	0.0000
85			0.00	0.0000
	T/E	LOSSES, MKBTU/HR BASIS (ENTER RESULT IN MKB COLUMN)	MKB	%
86A		WET ASH PIT	0.63	0.1003
85B		SENS HEAT RECY — SOLID	0.00	0.0000
86C		SENS HEAT RECY — GAS	0.00	0.0000
86D		ADDITIONAL MOIS	0.00	0.0000
86E		COOLING WATER	0.00	0.0000
86F		APH COIL (FROM UNIT)	0.00	0.0000
86G			0.63	0.1003
	T/E	CREDITS, % BASIS (ENTER RESULT IN % COLUMN)	MKB	%
87A			0.00	0.0000
87			0.00	0.0000
	T/E	CREDITS, MKBTU/HR BASIS (ENTER RESULT IN MKB COLUMN)	MKB	%
88A		HEAT IN ADD MOIS (EXIT ENV)	0.00	0.0000
88B			0.00	0.0000
88			0.00	0.0000

NAME OF PLANT:	UNIT NO. 1
TEST NO: 1 DATE 05/29/96	LOAD 100%
TIME START: 13:00 END: 17:00	CALC BY tch
ASME PTC4 EXAMPLE PROBLEM	DATE 10/08/96
OIL FIRING	SHEET OF

Copyright ASME International
Provided by IHS under license with ASME
No reproduction or networking permitted without license from IHS
Not for Resale

NONMANDATORY APPENDIX C
DERIVATIONS

C.1 INTRODUCTION

The derivation equations utilize the same acronym format as used in Section 5. Section 5.20 shows the format, definition of letters or letter combinations, and a summary of acronyms used.

C.2 DERIVATION OF SULFUR CAPTURE/RETENTION FROM MEASURED O_2 AND SO_2

The derivation below is shown for O_2 and SO_2 measured on a wet basis. For a dry basis, substitute *MODPP* for *MOWPP* and delete moles of moisture in air, *MOWA*. For the derivation below, CO and NO_x in the flue gas are assumed to be minimal such that they do not have a significant impact on the result. Refer also to Section C.5 for derivation with CO and NO_x.

$$VFO_2 = \frac{VPO_2}{100} = \frac{MOO_2}{MOWG}, \text{ moles } O_2\text{/mole wet gas (measured)} \tag{C.2-1}$$

$$VSFO_2 = \frac{(1 - MFSC)\, MOSO_2}{MOWG}, \text{ moles } SO_2\text{/mole wet gas (measured } SO_2) \tag{C.2-2}$$

where *MFSC* is the fraction of sulfur in fuel captured or retained.

$$MOSO_2 = \frac{MPSF}{3206.4}, \text{ maximum moles } SO_2\text{/mass fuel} \tag{C.2-3}$$

$$MODPP = \frac{MPCB}{1201} + \frac{MPSF}{3206.4} + \frac{MPN_2F}{2801.3} + MODGSB, \tag{C.2-4}$$

maximum moles of dry products from fuel and sorbent/mass fuel

$$MOWPP = MODPP + \frac{MPH_2F}{201.6} + \frac{MPWF}{1801.5} + \frac{MFWADn}{18.015} + MOWSB, \tag{C.2-5}$$

maximum moles of wet products from fuel and sorbent/mass fuel

$$MOTHAP = \frac{1}{0.2095}\left[\frac{MPCB}{1201} + \frac{MPH_2F}{403.2} + \frac{MPSF}{3206.4} - \frac{MPO_2F}{3200}\right], \tag{C.2-6}$$

moles of theoretical air with 100% conversion sulfur in fuel/mass fuel

Copyright ASME International
Provided by IHS under license with ASME
No reproduction or networking permitted without license from IHS

Not for Resale

$$MOTHAC = MOTHAP + \frac{MFSC}{2}\frac{MOSO_2}{0.2095}, \text{ moles theoretical } O_2 \text{ corrected for sulfur retention/mass fuel} \quad \text{(C.2-7)}$$

The corrected theoretical air requires one-half mole of O_2 for every mole of sulfur captured to form SO_3 in the reaction $CaO + SO_3 \rightarrow CaSO_4$.

The moles of wet gas (*MOWG*) is the sum of the maximum moles of wet products from fuel and sorbent less the moles of SO_2 captured plus the moles of nitrogen in the theoretical air plus the moles of water in the theoretical air plus the moles of wet excess air.

$$MOWG = MOWPP - MFSC\ MOSO_2 + 0.7905\ MOTHAC + MOTHAC\ MOWA + \frac{MOO_2}{0.2095}(1 + MOWA), \text{ moles wet gas/mass fuel} \quad \text{(C.2-8)}$$

$$MOWG = MOWPP - MFSC\ MOSO_2 + MOTHAP\ (0.7905 + MOWA) + \frac{MFSC}{2}\frac{MOSO_2}{0.2095}(0.7905 + MOWA) + MOWG\frac{VFO_2}{0.2095}(1 + MOWA) \quad \text{(C.2-9)}$$

$$\text{Let } K = (0.7905 + MOWA)\frac{1}{2}\frac{1}{0.2095} - 1 = 2.387\ (0.7905 + MOWA) - 1 \quad \text{(C.2-10)}$$

$$MOWG\left[1 - (1 + MOWA)\frac{VFO_2}{0.2095}\right] = MOWPP + MOTHAP\ (0.7905 + MOWA) + K\ MFSC\ MOSO_2 \quad \text{(C.2-11)}$$

$$MOWG = \frac{MOWPP + MOTHAP\ (0.7905 + MOWA) + K\ MFSC\ MOSO_2}{\left[1 - (1 + MOWA)\frac{VFO_2}{0.2095}\right]} \quad \text{(C.2-12)}$$

$$VFSO_2 = \frac{(MOSO_2 - MFSC\ MOSO_2)\left[1 - (1 + MOWA)\frac{VFO_2}{0.2095}\right]}{MOWPP + MOTHAP\ (0.7905 + MOWA) + K\ MFSC\ MOSO_2} \quad \text{(C.2-13)}$$

$$\text{Let } B = \frac{VFSO_2}{\left[1 - (1 + MOWA)\frac{VFO_2}{0.2095}\right]} \quad \text{(C.2-14)}$$

$$B\ [MOWPP + MOTHAP\ (0.7905 + MOWA)] + B\ K\ MFSC\ MOSO_2 + MFSC\ MOSO_2 = MOSO_2 \quad \text{(C.2-15)}$$

Copyright ASME International
Provided by IHS under license with ASME
No reproduction or networking permitted without license from IHS
Not for Resale

$$MFSC\ MOSO_2\ (1 + B\ K) = MOSO_2 - B\ [MOWPP + MOTHAP\ (0.7905 + MOWA)] \quad \text{(C.2-16)}$$

$$MFSC = \frac{1 - \left[\dfrac{VFSO_2\ [MOWPP + MOTHAP\ (0.7905 + MOWA)]}{[1 - (1 + MOWA)\ VFO_2/0.2095]\ MOSO_2}\right]}{1 + K\left[\dfrac{VFSO_2}{1 - (1 + MOWA)\ VFO_2/0.2095}\right]}, \text{ mass/mass} \quad \text{(C.2-17)}$$

C.3 DERIVATION OF EXCESS AIR BASED ON MEASURED O_2

The derivation shown below is for O_2 measured on a wet basis. For a dry basis, substitute *MODP* for *MOWP* and delete moles of moisture in air, *MOWA*. The resulting equation below is the same as presented in Section 5 and does not consider the impact of CO and NO_x on excess air as they are offsetting and usually insignificant. Refer to Section C.4 for excess air corrected for CO and NO_x.

$$VFO_2 = \frac{VPO_2}{100} - \frac{MOO_2}{MOWG}, \text{ moles } O_2\text{/mole wet gas (measured)} \quad \text{(C.3-1)}$$

$$MODP = \frac{MPCB}{1201} + (1 - MFSC)\frac{MPSF}{3206.4} + \frac{MPN_2F}{2801.3} + MODGSB, \quad \text{(C.3-2)}$$

moles of dry products from fuel and sorbent/mass fuel

$$MOWP = MODP + \frac{MPH_2F}{201.6} + \frac{MPWF}{1801.5} + \frac{MFWADn}{18.015} + MOWSB, \quad \text{(C.3-3)}$$

moles of wet products from fuel and sorbent/mass fuel

$$MOTHAC = \frac{1}{0.2095}\left[\frac{MPCB}{1201} + \frac{MPH_2F}{403.2} + (1 + 0.5\ MFSC)\frac{MPSF}{3206.4} - \frac{MPO_2F}{3200}\right] \quad \text{(C.3-4)}$$

moles of theoretical air corrected for sulfur capture/mass fuel

Moles of wet gas (*MOWG*) is the sum of the moles of wet products from fuel and sorbent plus the moles of nitrogen in the theoretical air plus the moles of water in the theoretical air plus the moles of wet excess air.

$$MOWG = MOWP + 0.7905\ MOTHAC + MOWA\ MOTHAC + FXA\ MOTHAC\ (1 + MOWA), \text{ moles of wet gas/mass fuel} \quad \text{(C.3-5)}$$

$$MOWG = MFWA\frac{28.966}{18.015} = 1.608\ MFWA, \text{ moles water/mole dry air} \quad \text{(C.3-6)}$$

$$MOO_2 = FXA\ 0.2095\ MOTHAC, \text{ moles excess } O_2\text{/mass fuel} \quad \text{(C.3-7)}$$

$$VFO_2 = \frac{MOO_2}{MOWG} = \frac{FXA\ 0.2095\ MOTHAC}{MOWP + MOTHAC\ (0.7905 + MOWA) + FXA\ MOTHAC\ (1 + MOWA)} \quad \text{(C.3-8)}$$

Copyright ASME International
Provided by IHS under license with ASME
No reproduction or networking permitted without license from IHS
Not for Resale

$$FXA\ 0.2095\ MOTHAC - VFO_2\ FXA\ MOTHAC\ (1 + MOWA) = VFO_2\ [MOWP + MOTHAC\ (0.7905 + MOWA)] \quad \text{(C.3-9)}$$

$$FXA = \frac{VFO_2\ [MOWP + MOTHAC\ (0.7905 + MOWA)]}{MOTHAC\ [0.2095 - VFO_2\ (1 + MOWA)]}, \text{ mass fraction of excess air} \quad \text{(C.3-10)}$$

$$PXA = 100\ \frac{VPO_2\ [MOWP + MOTHAC\ (0.7905 + MOWA)]}{MOTHAC\ [20.95 - VPO_2\ (1 + MOWA)]}, \text{ \% excess air} \quad \text{(C.3-11)}$$

C.4 DERIVATION OF O_2 CORRECTED FOR CO AND NO_x FOR DETERMINING EXCESS AIR

The excess air equations shown in Sections 5 and C.3 consider all of the carbon gasified, CB, to be converted to CO_2 and that CO for most combustion processes will be small and have an insignificant impact on calculated excess air. The formation of NO_x reduces the oxygen content of the flue gas and is also considered to have an insignificant impact on calculated excess air.

In this paragraph, an oxygen content corrected for CO and NO_x (VPO_2C) is derived that can be substituted for VPO_2 in the excess air equations presented previously.

Consider the following reactions:

$$2\ O_2 + 2\ C \rightarrow 2 \text{ Complete Combustion} \quad \text{(C.4-1)}$$

$$2\ O_2 + 2\ C \rightarrow CO + CO_2 + 1/2\ N_2 + 1/2 \text{ Incomplete Combustion} \quad \text{(C.4-2)}$$

$$N_2 + O_2 \rightarrow NO + 1/2\ N_2 + {}^1\!/_2 O_2 \quad \text{(C.4-3)}$$

When CO is present, there is one-half mole more O_2 present per mole of CO than there would be if all the gasified carbon, CB, were oxidized to CO_2. For simplicity, NO_x will be considered in its most abundant form, NO. When NO is formed, there is one-half mole less O_2 than if there were no NO; however, the total number of moles of gas does not change.

Referring to Section C.3, the equation for MOO_2 [Eq. (C.3-7)] becomes:

$$MOO_2 = FXA\ 0.2095\ MOTHAC + \frac{MOCO}{2} - \frac{MONO_x}{2}, \text{ moles excess } O_2\text{/lbm fuel} \quad \text{(C.4-4)}$$

$$\frac{VPO_2}{100} = \frac{MOO_2}{MOG} = \frac{FXA\ 0.2095\ MOTHAC}{MOG} + \frac{1}{2}\frac{MOCO}{MOG} - \frac{1}{2}\frac{MONO_x}{MOG} \quad \text{(C.4-5)}$$

$$\frac{VPCO}{100} = \frac{MOCO}{MOG} \text{ or } \frac{1}{2}\frac{MOCO}{MOG} = \frac{VPCO}{200} \quad \text{(C.4-6)}$$

$$\frac{VPNO_x}{100} = \frac{MONO_x}{MOG} \text{ or } \frac{1}{2}\frac{MONO_x}{MOG} = \frac{VPNO_x}{200} \quad \text{(C.4-7)}$$

Copyright ASME International
Provided by IHS under license with ASME
No reproduction or networking permitted without license from IHS Not for Resale

$$\text{Let } \frac{VPO_2Cl}{100} = \frac{VPO_2}{100} - \frac{VPCO}{200} + \frac{VPNO_x}{200} = \frac{FXA\ 0.2095\ MOTHAC}{MOG} \tag{C.4-8}$$

where *MOG* is the moles of gas on a wet or dry basis.

Let *MOTHG* equal *MOWG* defined in Section C.3 (or *MODG* if measurement on a dry basis). Then the moles of gas considering CO and NO_x become:

$$MOG = MOTHG + \frac{MOCO}{2} = MOTHG + \frac{VPCO}{200} MOG \tag{C.4-9}$$

$$\text{Let } MOGCF = \frac{1}{\left[1 - \frac{VPCO}{200}\right]} \tag{C.4-10}$$

then

$$MOG = \frac{MOTHG}{\left[1 - \frac{VPCO}{200}\right]} = MOTHG\ MOGCF \tag{C.4-11}$$

Dividing Eq. (C.4-8) by the moles of gas correction factor (*MOGCF*) yields

$$VPO_2C = \frac{VPO_2\ Cl}{100\ MOGCF} = \frac{FXA\ 0.2095\ MOTHAC}{MOTHG} \tag{C.4-12}$$

which is the same as Eq. (C.3-8). Thus, to correct excess air for CO and NO_x, substitute VPO_2C for VPO_2 in the excess air equations in Sections 5 and C.3. VPO_2C becomes:

$$VPO_2C = \left[VPO_2 - \frac{VPCO}{2} + \frac{VPNO_x}{2}\right]\left[1 - \frac{VPCO}{200}\right], \text{ } O_2 \text{ corrected for CO and } NO_x \tag{C.4-13}$$

C.5 DERIVATION OF SULFUR CAPTURE/RETENTION FROM MEASURED O_2 AND SO_2 CONSIDERING CO AND NO_x IN THE FLUE GAS

(Later)

C.6 FUEL EFFICIENCY — MIXED UNITS FOR LOSSES AND CREDITS

Most losses and credits can be calculated conveniently on an input from fuel basis. However, some losses/credits can only be calculated on an energy per unit of time basis such as radiation and convection loss. One approach is to estimate the input from fuel and convert the loss/credit on an energy per unit of time basis to an input from fuel basis. This requires reiterating until the estimated input from fuel agrees with the calculated input based on the calculated efficiency. The equation below allows solving for efficiency using losses and credits in mixed units:

$$QRF + QRB = QRO + QRL \tag{C.6-1}$$

Multiplying by 100/*QRF*:

Copyright ASME International
Provided by IHS under license with ASME
No reproduction or networking permitted without license from IHS Not for Resale

$$100 + 100\frac{QRB}{QRF} = 100\frac{QRO}{QRF} + \frac{QRL}{QRF} \quad \text{(C.6-2)}$$

By definition,

$$PFE = 100\frac{QRO}{QRF}, \% \quad \text{(C.6-3)}$$

$$QPL = 100\frac{QRL}{QRF}, \% \quad \text{(C.6-4)}$$

$$QPB = 100\frac{QRB}{QRF}, \% \quad \text{(C.6-5)}$$

$$\therefore PFE = 100 - QPL + QPB, \% \quad \text{(C.6-6)}$$

Losses calculated on an energy input basis can be converted to a percent basis:

$$100\frac{QRL}{QRF} = QPL = \frac{QRL}{QRO}PFE, \% \quad \text{(C.6-7)}$$

As in Eq. (C.6-6), adding credits and losses:

$$PFE = 100 - QPL + QPB - PFE\frac{QRL}{QRO} + PFE\frac{QRB}{QRO}, \% \quad \text{(C.6-8)}$$

which reduces to

$$PFE = (100 - QPL + QPB)\left[\frac{QRO}{QRO + QRL - QRB}\right], \% \quad \text{(C.6-9)}$$

Copyright ASME International
Provided by IHS under license with ASME
No reproduction or networking permitted without license from IHS
Not for Resale

NONMANDATORY APPENDIX D
GROSS EFFICIENCY

D.1 INTRODUCTION

Efficiency is the ratio of energy output to energy input, expressed as a percentage. This Code recognizes two definitions of steam generator efficiency: fuel efficiency and gross efficiency. The output term (*QrO*) is the same for both definitions of efficiency and is defined in Sections 2 and 5 as the heat absorbed by the working fluid to produce useful energy. For fuel efficiency (*EF*), the energy input to the system is defined as the total heat of combustion available from fuel or the fuel input (*QrF*). For gross efficiency (*EGr*), the energy input to the system is defined as the total energy added to the system or gross input (*QrIGr*). The gross input is the sum of the input from fuel (*QrF*) plus credits (*QrB*) or the energy added to the system from other sources with respect to the reference temperature, 77°F (25°C). Refer to Section 5 for a more complete definition of credits.

$$EGr = 100\,\frac{OUTPUT}{GROSS\ INPUT} = 100\,\frac{QrO}{QrIGr},\ \% \qquad \text{(D.1-1)}$$

$$QrIGr = QrF + QrB,\ \text{Btu/h (W)} \qquad \text{(D.1-2)}$$

The advantage of gross efficiency versus fuel efficiency is that it is a measure of the total energy required to produce a given output, and thus may have some meaning if the costs of the other energy sources are not evaluated separately. The major disadvantage of gross efficiency is that it is not universally understood by those evaluating a total system and may be used incorrectly. The major sources of energy added to the system and credits are electrical and steam energy. The cost of these energy sources is not the same on a Btu basis as the energy cost of the fuel, and should be (usually is) evaluated separately. If the cost of credits is evaluated separately, gross efficiency is not appropriate for the evaluation of energy cost to produce a given output. Therefore, fuel efficiency is the preferred method in this Code for expressing efficiency.

D.2 ENERGY BALANCE METHOD

To calculate gross efficiency (*EGr*) by the energy balance method, the fuel efficiency (*EF*) should be calculated first by the energy balance method in accordance with Section 5. Gross efficiency may then be calculated from one of the following equations:

$$EGr = 100\,\frac{QrO}{QrF + QrB} = 100\left[1 - \frac{QpL}{100 + QpB}\right] \qquad \text{(D.2-1)}$$
$$= 100\left[1 - \frac{QrL}{QrF+QrB}\right],\ \%$$

$$QrF = 100\,\frac{QrO}{EF},\ \text{Btu/h (W)} \qquad \text{(D.2-2)}$$

where

QrB = summation of credits, Btu/h (W) basis. Items that result in a negative credit shall still be considered as a "credit" in the calculation of gross efficiency. It may be questioned why exothermic reactions, in particular sulfation, are considered a credit. This is a matter of definition adopted by the Code committee, but it is interesting to note that they have no impact on gross efficiency because the input from fuel will be reduced by the exact amount of the heat gained from sulfation.

QpB = summation of credits, percent (%) basis

QrL = summation of losses, Btu/h (W) basis

QpL = summation of losses, percent (%) basis

D.3 INPUT-OUTPUT METHOD

Efficiency calculated by the input-output method is based upon measuring the fuel flow and boiler fluid side conditions necessary to calculate output. Credits are measured and/or calculated to determine total input as defined above. The uncertainty of efficiency calcu-

Copyright ASME International
Provided by IHS under license with ASME
No reproduction or networking permitted without license from IHS
Not for Resale

STD.ASME PTC 4-ENGL 1998 ■ 0759670 0615186 597 ■

lated by the input-output method is directly proportional to the accuracy of determining the fuel flow, a representative fuel analysis, and steam generator output. Therefore, to obtain reliable results, extreme care must be taken to determine these items accurately:

$$EGr = 100 \frac{QrO}{QrF+QrB}, \%$$ (D.3-1)

$$QrF = MrF\ HHVF, \text{ Btu/h (W)}$$ (D.3-2)

where

MrF = measured mass flow rate of fuel, lbm/h (kg/s)
HHVF = higher heating value of fuel, Btu/lbm (J/kg). Refer to Section 5.8.
QrF = heat input from fuel, Btu/h (W)
QrB = summation of credits, Btu/h (W) basis. Refer to Section 5 for the general method of calculation. For the credits calculated on a percent input from fuel basis, multiply by (*QrF*/100) to convert to Btu/h (W). Below are supplementary comments on the calculation of credits that are not measured directly.

The credits due to heat in entering dry air (*QrBDA*) and moisture in entering dry air (*QrBWA*) require the mass flow rate of dry air. The mass flow rate of dry air is calculated stoichiometrically from the ultimate fuel analysis and unburned carbon in the refuse (refer to Section 5 and the Combustion Calculation form, Appendix B). For units that do not utilize sorbent for reduction of sulfur emissions, it may be necessary to calculate unburned carbon in the refuse (refer to the Unburned Carbon and Refuse Calculation form, Appendix B). For units that do use sorbent, it will be necessary to calculate the mass fraction of sulfur capture as well as unburned carbon in the refuse (refer to the Sorbent Calculation form, Appendix B). The credit due to sulfation (*QrBSlf*) is calculated from the mass fraction of sulfur capture which is calculated above. The use of sorbent also impacts the mass flow rate of dry air.

Copyright ASME International
Provided by IHS under license with ASME
No reproduction or networking permitted without license from IHS
Not for Resale

NONMANDATORY APPENDIX E
THE PROBABLE EFFECTS OF COAL PROPERTIES ON PULVERIZED COAL AND COAL AND SORBENT PROPERTIES ON FLUIDIZED BED STEAM GENERATOR DESIGN AND PERFORMANCE

E.1 INTRODUCTION

This Appendix addresses the following:

- Probable effects of coal properties on pulverized coal steam generator design and performance.
- Probable effects of coal and sorbent properties on fluidized bed steam generator design and performance.

E.2 PULVERIZED COAL FIRED STEAM GENERATORS

This Section gives general guidance for identifying the relationship of steam generator design and effects on its performance when a fuel is other than the design generator acceptance test. This Section is not intended to be inclusive but rather to identify significant coal properties and their impact on steam generator design and performance trends.

E.2.1 Coal Rank/Equipment Size

Steam, Its Generation and Use [7] provides a complete discussion of coal rank. Coal characteristics, and coal rank in particular, have a dramatic impact on furnace sizing. Tuppeny [8] compares the size of a furnace burning eastern bituminous, midwestern bituminous/subbituminous, Texas lignite, and Northern Plains lignite coals. Table E.2-1 summarizes the relative furnace sizes, coal quantities, and pulverizer sizes based upon the assumptions made in the reference.

E.2.2 Slagging and Fouling

Slagging and fouling, other than expected and accounted for by the boiler design, can significantly alter steam generator performance and efficiency. It is thus very important that the coal selected for a performance test have substantially the same slagging, fouling, and combustion characteristics as the design coal.

Slagging, fouling, and combustion indices must be developed for the design coal and compared to the test coal before any performance test is begun. The test coal must have the same characteristics as the design coal. The analysis should be based on the application of several indices developed by the industry and found in sources such as Reference [4].

The Test Engineer is cautioned to use several slagging, fouling, and combustion indices in making this judgment, since no single index gives totally accurate and indisputable results.

E.2.3 Coal Properties Determination

Standard tests for coal are identified below. Examination of the results of these standard coal tests is used to infer the effects on steam generator design and performance. The Test Engineer should use these standard tests to assess the coals to be burned before undertaking steam generator performance testing. Major coal property tests include the following:

- proximate analysis
- ultimate analysis
- ash fusibility
- hardgrove grindability index
- ash mineral analysis
- combustion characteristics

These and many other tests and indices are listed and discussed in Reference [4].

E.2.4 Probable Effects of Coal Properties on Steam Generator Design and Performance

The complex effects of the coal properties, as assessed by the above standard tests, on steam generator design, thermal performance, and overall boiler operation are listed in Table E.2-2. This table primarily lists effects that cannot be corrected to contract conditions.

Copyright ASME International
Provided by IHS under license with ASME
No reproduction or networking permitted without license from IHS
Not for Resale

TABLE E.2-1
EFFECTS OF COAL RANKS ON STEAM GENERATORS

Coal	Relative Coal Quantities	Relative Furnace Dimensions			Relative Pulverizer Sizes
		Depth	Width	Height	
Eastern Bituminous	1	1	1	1	1
Subbituminous	1.43	1.06	1.08	1.05	1.7
Texas Lignite	1.64	1.08 to 1.24	1.16 to 1.26	1.07 to 1.30	1.84
Northern Plains Lignite	1.76	1.76	1.26	1.45	2.0

GENERAL NOTE: From this Table it becomes obvious that a steam generator designed for one coal rank will not operate well or may be totally unsuitable for other types of coals. This emphasizes the need to evaluate test coals relative to the specified coals to establish their suitability for the unit being tested.

E.3 FLUIDIZED BED COMBUSTION COAL FIRED STEAM GENERATORS

There are three main parameters for atmospheric fluidized bed combustors (AFBC):

- Thermal efficiency — This is the combined effect of combustion efficiency, heat transfer performance of the heat surfaces throughout the steam generator, and auxiliary power required to run the steam generation operation.
- Sulfur dioxide capture efficiency.
- NO_x generation rate — To determine these performance parameters in the field, the Test Engineer must be aware of and understand all factors which may influence these parameters. These factors can be inherent in the design parameters, operating conditions, coal and sorbent material properties, or any combination of these factors. Due to the complexity of such interrelations between these factors and the AFBC performance parameter, this Section addresses only the major factors as reported by the industry.

This portion of Appendix E gives general guidance for predicting the effect on steam generator design and performance when the fuel and/or sorbent is changed from the design coal and/or sorbent. As with the previous section, this section is not intended to be inclusive but rather to identify many of the design and performance trends. In this section, standard tests for coal and sorbent are identified. Examination of the results of these standard tests is used to infer the effects on steam generator design and performance.

E.3.1 Coal Properties Determination

Some of the coal property tests previously described for conventional coal units are applicable to AFBC units. The following standard analyses should be conducted on the fuel in question:

- proximate
- ultimate
- coal mineral ash
- higher heating value
- ash fusion temperature

However, some of the key fuel characteristics pertinent to combustion in AFBC boilers are different from the characteristics pertinent to combustion in pulverized-coal and stoker fired boilers (References [9], [10], [11]). The differences are a result of the distinct environment in AFBC boilers (lower temperature, longer residence times, larger coal particles, and mechanical effects of bed material). Therefore, to obtain these AFBC fuel characteristics, tests specially designed for AFBC applications are suggested in addition to standard tests and analyses (References [9] and [10]). These tests are described below:

- Feed System Attrition Test (Underbed Feed) — This test indicates the extent of breakage of attrition of the new fuel with respect to the design fuel due to transport through the coal feed system and feed point. High attrition increases the fines content, which can reduce combustion efficiency and increase emissions.
- Combustion-Enhanced Mechanical Attrition Test — This test is important mainly for low reactivity fuels and indicates the extent of attrition which occurs in the AFBC unit during combustion. Again, high attrition increases the fines content, which can reduce combustion efficiency.
- Devolatilization/Bulk Reactivity Test — This set of tests provides the data to determine the volatile yield (which may be different from the proximate volatile

Copyright ASME International
Provided by IHS under license with ASME
No reproduction or networking permitted without license from IHS
Not for Resale

TABLE E.2-2
EFFECTS OF COAL PROPERTIES ON STEAM GENERATOR DESIGN AND PERFORMANCE

Coal Property Variable	Affected Component(s)	Probable Effect On
1. Coal Heating Value	Silo Storage Feeders Pulverizers Burners Emission Control Equipment Coal Handling System	Coal Flow Rate Equipment Capacity Number of Components in Service Turndown Ratio
2. Coal Moisture Content	Silo Storage Feeders Pulverizers Primary Air System ID Fans Coal Handling System	Coal Flow Rate Equipment Capacity Coal Flow Ability Pulverizer Outlet Temperature Primary Air/Tempering Air Flow Quantities Turndown Ratio
3. Volatile Content	Burners Furnace Pulverizers Ignitors	Required Fineness Burner Design Flame Stability/Ignition Unburned Carbon Loss Furnace Geometry Firing Methods Pulverizer Inerting Needs Turndown Ratio
4. Grindability Index	Pulverizers	Capacity Fineness Power Requirements
5. Coal Abrasiveness Index	Coal Handling System Pulverizer Components Coal Piping Burner Nozzles Convection Passes Air Heater (A/H) Heating Elements and Seals	Equipment Outages Maintenance Design Velocity Requirements Material Selection Tube Wear and Life Reliability Air Heater Performance
6. Nitrogen Content	Burners Furnace Air Distribution	Burner Design Furnace Geometry Air and Flue Gas System NO_x Emissions Required Burner Zone Stoichiometry
7. Sulfur Content	Scrubber Precipitators Air Preheaters Steam Coils	Corrosion Rate Equipment Sizing Requirements Stack Gas Temperature Requirements Emission Control Equipment
8. Reactivity Index	Burners Pulverizers Inerting System Ignitors	Combustion Explosion Potential Unburned Carbon Loss Turndown Ratio

Copyright ASME International
Provided by IHS under license with ASME
No reproduction or networking permitted without license from IHS
Not for Resale

TABLE E.2-2 (CONT'D)
EFFECTS OF COAL PROPERTIES ON STEAM GENERATOR DESIGN AND PERFORMANCE

Coal Property Variable	Affected Component(s)	Probable Effect On
9. Ash Content	Ash Handling	Capacity
	Pulverizers	Performance
	Soot Blowers	Design Velocity Requirement
	Precipitators	Tube Wear and Life
	Convection Passes	Reliability
		Soot Blowing Requirements
10. Ash Fusibility	Furnace	Slagging/FEGT/Steam Temperature
	Soot Blower	Fouling/Steam Temperature
	Water Lancing	NO_x Emissions
		Soot Blowing and Water Lancing Operation
11. Coal Ash Analyses	Steam Generator	Slagging/FEGT/Steam Temperature
	Emission Control Equipment	Fouling/Steam Temperature
	Soot Blowers	Precipitator Efficiency
	Ash Handling Systems	Design Tube Spacing Requirement
		Excess Air Requirement
		NO_x Emissions
		Ash Split

GENERAL NOTE: For general information on steam generator design and operation, refer to References [1] through [7]. References [2] and [7] are texts used extensively in the industry.

yield resulting from the different combustion environment), devolatilization rate, volatiles and char burnout times, and activation energy and pre-exponential coefficient for reactivity determination.

- Coal Swelling Test — For coals that swell (caking coals), this test establishes the size of a coal particle after devolatilization, which affects burnout time. The test also provides an indication of agglomeration potential; if a coal swells, agglomeration may be a potential problem.
- Fragmentation Test — This test establishes the extreme of fragmentation for the planned coal feed size distribution. Coal particles greater than a critical size which is specified to each coal fragment during combustion. The number and size of fragments affect the coal burnout time. This test is most important for overbed feed application.

Ideally, the range of fuels planned for a unit would be characterized prior to design to incorporate the flexibility required to accommodate the fuels into the unit and auxiliary equipment. For a fuel not previously considered, neglecting to run the AFBC characterization tests risks performance and operational problems. Because the standard analyses are not entirely relevant to AFBC, comparing the standard analyses of the design fuel with the new fuel will not reveal the characteristics that may cause changes in performance and operation.

E.3.2 The Effect of Coal Properties on Steam Generator Design and Performance

One example of the unseen differences among coals was shown in a coal selection study identified in Reference [12]. Four medium-volatility coals appeared similar by comparison of ultimate and proximate analyses, but AFBC fuels characterization tests revealed significant differences in combustion efficiency resulting from differences in the devolitilization rates and char reactivities. A fifth medium-volatility coal, Bradford, had still different characteristics from the other four, although the ultimate and proximate analyses were similar. These characteristics were not disclosed by the standard analyses.

Tables E.3-1 through E.3-4 show the performance and design variations that could be expected from a change in coal. The first column shows the specific coal property tests. In the second column, the steam generator component or process parameter is identified

Copyright ASME International
Provided by IHS under license with ASME
No reproduction or networking permitted without license from IHS
Not for Resale

that is affected by a change in the listed coal property. In the third column, the effect is described for a change in property from the coal test. In the fourth column, consequences are identified for the effect if action is not taken to rectify the problem created by the variation in the coal property. In the fifth and sixth columns, general corrective actions are identified that could alleviate or minimize the consequence identified in the fourth column. The fifth column is a process corrective action, and the sixth column is an equipment corrective action.

E.3.3 Sorbent Properties Determination

Determining sorbent characterizations from property tests is not always conclusive. In some cases, there is more than one recognized test for the same property. The purpose of this Appendix is to suggest sorbent tests for guidance in characterizing sorbent for use in steam generator design and performance.

Tables E.3-5 through E.3-7 show the performance and design variations that would be expected from a change in sorbent. These tables have the same format as the previously described tables for coal.

The first step suggested for predicting the change of sorbent is to conduct the following standard chemical analyses for the sorbent: calcium, magnesium, moisture, and silica.

In addition, it is advisable to perform an abrasion test for the sorbent and a particle size distribution.

If the geological classification for the new sorbent is different from the design sorbent, the following tests are also recommended:

- thermogravimetric analysis (TGA)
- grain size
- pore size
- attrition
- surface area (raw and calcined)
- pore volume (raw and calcined)

E.3.4 The Effect of Sorbent Properties on Steam Generator Design and Performance

Tables E.3-5 through E.3-7 show the performance and design variations that would be expected from a change in sorbent. These tables have the same format as the previously described tables for coal. Review References [13] and [14] for more information.

Copyright ASME International
Provided by IHS under license with ASME
No reproduction or networking permitted without license from IHS Not for Resale

TABLE E.3-1
PROXIMATE ANALYSIS FOR COAL

Approximate Analysis	Component/ Process Parameter	Effect	Consequences	Corrective Action	
				Process	Equipment
Moisture	Underbed feed lines	Excessive surface moisture (>6%) could cause pluggage	Extra maintenance to alleviate line pluggage	Feed lower moisture coal	Install coal dryer with flexibility to dry wetter coal
	Bed temperature	Excessive moisture could cause a drop below optimum temperature range for process performance	Higher SO_x emissions Lower combustion efficiency	Increase firing rate; drop bed level (bubbling bed)	Fans. In-bed tube bundle design
	Coal feed equipment	Higher coal feed rates required	Load reduction		Upgrade feed equipment size
Volatile matter and fixed carbon	In-bed/freeboard combustion split	Change in either fixed carbon or volatile matter could cause substantially different bed temperature	Change in combustion efficiency, SO_s, NO_x, and CO emissions, and heat transfer	Adjust firing rate; adjust bed level. Additional tests	Adjust in-bed heat transfer surface. Install larger transport fans
				Adjust recycle (bubbling bed)	
				Adjust solids loading (circulating bed)	
	Furnace temperature profile			Vary particle size distribution	Install crusher with wider range
Ash	Ash removal systems	Higher ash content could exceed capabilities of removal systems	Load reduction		Upgrade ash removal system
	Recycle	At a given recycle ratio, higher ash content implies lower combustible and sorbent recirculation	Lower combustion efficiency and higher SO_2 emissions	Adjust recycle	Install ash classifier
	Multiclone/ Cyclone	Inert ash could dilute recycle material	Combustion efficiency reduction. Baghouse or ESP overload		Install with higher capacity: ESP, baghouse, recycle, and/or multiclone
	Ash coolers	Higher ash content could exceed ash cooler capabilities	Load reduction		Upgrade ash coolers

Copyright ASME International
Provided by IHS under license with ASME
No reproduction or networking permitted without license from IHS
Not for Resale

TABLE E.3-2
ULTIMATE ANALYSIS OF COAL

Ultimate Analysis	Component/ Process Parameter	Effect	Consequences	Corrective Action	
				Process	Equipment
Sulfur	Sulfur retention	An increase in sulfur would increase sulfur emissions	Higher sulfur emissions	Increase sorbent feed rate. Increase recycle (bubbling bed)	Upgrade sorbent feed system. Upgrade limestone feed system
Coal Ash Analysis					
MgO CaO	Sulfur retention	A decrease in either MgO content and/or CaO content would increase sulfur emissions	Higher sulfur emissions	Increase sorbent feed	Upgrade sorbent feed system
Na_2O	Ash fusion temperature	A lower Na_2O content could be indicator of lower ash fusion temperature. If freeboard temperature exceeds ash fusion temperature, then slagging could occur on freeboard waterwall	Lower heat transfer to freeboard waterwall and lower boiler efficiency. Decreased load	Require repeated outages to remove slag	
		An increase in sodium content could cause ash agglomeration in bed	Lower in-bed heat absorption. Inability to fluidize bed compartment	Requires repeated outages to remove ash agglomeration.	
Na_2O K_2O	Fly ash resistivity	An increase in Na_2O and K_2O could increase fly ash resistivity and decrease ESP efficiency	Higher solids emissions	Decrease backend temperature if possible	Upgrade ESP design. Install ammonia injection, water injection system for ESP

Copyright ASME International
Provided by IHS under license with ASME
No reproduction or networking permitted without license from IHS
Not for Resale

TABLE E.3-3
SPECIAL TESTS AND SIZE ANALYSIS FOR COAL

Special/ Standard Tests	Component/ Process Parameter	Effect	Consequences	Corrective Action	
				Process	Equipment
Higher heating value (*HHV*)	Fuel feed rate	Lower HHV requires greater feed rate and capabilities of fuel feed or ash removal system could be exceeded	Load reduction	Increase firing rate	Upgrade coal reed system capacity. Upgrade ash removal system
Ash fusion temperature	Ash fusion temperature	If freeboard temperature exceeded ash fusion temperature, slagging could occur on freeboard waterwall	Lower freeboard waterwall heat absorption. Lower boiler efficiency	Reduce firing rate or recycle rate	Upgrade freeboard heat transfer surface
Size Analysis					
Sieve	Fines (coal particles less than 30 mesh)	Excessive fines (15–20%) could result in higher freeboard temperatures	Slagging. Boiler not surfaced correctly. Higher SO emissions	Double screen or wash coal	Select crusher with flexibility to produce coarser product
		Excessive carbon elutriated from combustor when feeding overbed	Lower combustion efficiency		Adjust crusher (remove plates). Ash reinjection
	Large coal sizes	The underbed feedlines or splitters could plug	Operating bed below performance temperature. Reduction in load		
		Rocks could accumulate in bed when feeding overbed	Reduction in load		Upgrade in-bed rock removal system. Coal preparation system design to selectively remove large particles

Copyright ASME International
Provided by IHS under license with ASME
No reproduction or networking permitted without license from IHS Not for Resale

TABLE E.3-4
SPECIAL AFBC TESTS FOR COAL

Special AFBC Tests	Component/ Process Parameter	Effect	Consequences	Corrective Action	
				Process	Equipment
Feedline attrition coefficients	Feedlines Combustion split Combustion efficiency	Feedline attrition causes increase in fines	More carbon elutriated from combustor. Lower combustion efficiency	Adjust transport velocity	Adjust crusher. Install with more flexibility. Upgrade fuel feed system design
Bulk reactivity	Reactivity Combustion split Combustion efficiency	Change of in-bed/ freeboard heat split could cause excessively high or low freeboard and/or bed temperatures.	Imbalance in superheat and evaporative heat duties. Attemperation Lower efficiency possible for less reactive fuel	Adjust bed depth (bubbling bed). Adjust solids loading (circulating bed). Adjust recycle rate	Upgrade fuel feed system
Combustion enhanced mechanical attrition (CEMA)	Attrition Combustion split Combustion efficiency	Carbon particles can have excessive attrition in bed	More freeboard combustion; higher freeboard temperatures; possibly more carbon elutriated from combustor. Lower combustion efficiency. More in-bed combustion and lower freeboard temperatures	Adjust fuel feed size. Adjust velocity to increase residence time	Adjust crusher
Swelling index	Expansion of coals Particles	Bituminous coals swell and then break	Without this information, less confidence in results from certain combustion models.	An increase in swelling index tends to decrease overall combustion efficiency	Decrease air velocity or increase recycle rate
Fragmentation index	Fragmentation Combustion split Combustion efficiency	Lignite and subbituminous coals usually fragment less	Without this information, less confidence in results from certain combustion models	Is more important for overbed feed than for underbed feed, unless the fuel is an agglomerate to start with	

Copyright ASME International
Provided by IHS under license with ASME
No reproduction or networking permitted without license from IHS
Not for Resale

TABLE E.3-5
CHEMICAL ANALYSIS OF SORBENT

Chemical Analysis	Component/ Process Parameter	Effect	Consequences	Corrective Action	
				Process	Equipment
Calcium	Sorbent flow rate	Decrease in calcium content in limestone	Increase in sulfur emissions or calcium to sulfur molar ratio	Adjust sorbent flow rate	Increase sorbent feed system capacity
Magnesium	Sorbent flow rate	Decrease in magnesium content in limestone	Increase in sulfur emissions or calcium-to-sulfur molar ratio	Adjust sorbent flow rate	Increase sorbent feed system capacity
Moisture	Underbed feedlines	The occurrence of pluggages of feedlines and splitters could increase	Segments of beds operating below optimum temperature for process performance. Reduced load could occur	Maintain stricter quality control on limestone	
	Boiler efficiency	Additional heat will be required to evaporate moisture	Lower boiler efficiency		
Silica	Feedlines	More silica content might result in more erosion in limestone feedlines	Possible replacement of limestone feedlines		Choose fix. Refer to abrasion index below
Abrasion					
Abrasion index	Feedlines	Higher abrasion index would indicate more erosion	Repair and replacement of feedlines		Use erosive prevention devices when possible such as blind tees. Use of ceramic lining. Addition of wear pads in areas where high erosion would be expected. Use of special coatings
	Heat exchanger tubes		Repair and replacement of tubes		Install tube bundles. Install protective devices on bottom of tubes such as balls or studs

Copyright ASME International
Provided by IHS under license with ASME
No reproduction or networking permitted without license from IHS
Not for Resale

TABLE E.3-6
SIZE AND TGA ANALYSIS AND GEOLOGICAL CLASSIFICATION OF SORBENT

Particle Size Distribution	Component/ Process Parameter	Effect	Consequences	Corrective Action	
				Process	Equipment
Sieve	Underbed feedlines	Large particles can cause pluggage	More feedline pluggage. If same feedlines as coal feed, then local temperature below optimum for process performance	Upgrade limestone preparation system	Upgrade sorbent feed system design. Increase baghouse capacity. Increase ESP capacity
	Sulfur capture	Smaller particles could blow out of bed and have lower sulfur capture. Large particles have less surface area, thus lower sulfur capture	Less sulfur capture and less calcium utilization		
	Multiclone	Sufficiently small particles cannot be captured by multiclones	Increase fly ash burden on air preheater and baghouse		
			Limit recycle rate		
Thermogravimetric (TGA)					
Reactivity	Sulfur capture	Less reactive limestone could have lower sulfur capture	Possibly more sulfur emissions	Possibly increase sorbent feed rate. Conduct other types of tests to increase confidence in reactivity estimate	Increase sorbent feed system capacity
GeologicaL Classification					
Geological age	Calcium utilization	Younger limestone would probably not be as efficient	More sulfur emissions	Increase sorbent feed rate	Increase sorbent system capacity

Copyright ASME International
Provided by IHS under license with ASME
No reproduction or networking permitted without license from IHS
Not for Resale

TABLE E.3-7
ATTRITION, GRAIN, AND PORE SIZE ANALYSES OF SORBENT

Attrition	Component/ Process Parameter	Effect	Consequences	Corrective Action	
				Process	Equipment
Attrition constant	In-bed attrition Sulfur capture	Limestone with high attrition constant will attrite into many pieces and be blown out of bed	Lower sulfur capture and calcium utilization	Adjust velocity	Install transport fans with flexible capacity Upgrade flyash removal
		If attrition is severe then the fly ash to disposal would increase	Increase in fly ash to be disposed	Increase cleaning frequency of baghouse	Install baghouse with higher capacity
Tem Micrographs					
Grain size	Grain size	Generally, sorbents with smaller grain sizes have more sulfur capture potential. Two exceptions are very finely grained dense limestones and crenoidal limestones	Lower sulfur capture or higher calcium-to-sulfur molar ratio	Increase sorbent feed	Increase sorbent system capacity Increase ash removal system capacity
Mercury Penetration Porosimeters					
Pore size	Pore size	Generally, sorbents with larger pore sizes have more sulfur capture potential	Lower sulfur capture or higher calcium-to-sulfur molar ratio	Increase sorbent feed	

Copyright ASME International
Provided by IHS under license with ASME
No reproduction or networking permitted without license from IHS
Not for Resale

NONMANDATORY APPENDIX F
REFERENCES

Section 1
None.

Section 2
[1] ASME SI-1, Orientation and Guide for Use of SI (Metric) Units (ANSI Z210.1).
[2] ASME SI-9, Guide for Metrication of Codes and Standards SI (Metric) Units.

Section 3
[1] Scharp, C. Accuracy and Practicability: An Enigma in Performance Testing. ASME Paper 84-JPGC-PTC-5, 1984.
[2] Entwistle, J. Definition and Computation of Steam Generator Efficiency. ASME Paper 84-JPGC-PTC-6, 1984.
[3] Entwistle, J., T. C. Heil, and G. E. Hoffman. Steam Generator Efficiency Revisited. ASME Paper 88-JPGC-PTC-3, 1988.
[4] Davidson, P., E. Sotelo, and P. Gerhart. Uncertainty Analysis and Steam Generator Testing. ASME Paper 86-JPGC-PTC-1, 1986.

Section 4
None.

Section 5
[1] Jones, F. E. The Air Density Equation and the Transfer of the Mass Unit. *Journal of Research of the National Bureau of Standards*. Vol. 83, No. 5, September–October 1978.
[2] NBS Technical Notes 270-3 to 270-8 as cited in *CRC Handbook of Chemistry and Physics*, 65th edition. CRC Press, Boca Raton, Florida.
[3] JANAF Thermochemical Tables, Second Edition. NSRDS-NBS 37.
[4] United States National Aeronautics and Space Administration (NASA) Publication SP-273.
[5] Kirov, N. Y. *Chemistry of Coal Utilization*, Second Supplementary Volume. M. A. Elliott, ed. John Wiley and Sons, New York, 1981.
[6] Gould, D. W. *The Science of Petroleum*, 1938, as cited in ASME PTC 4.1-1964.

Section 6
None.

Section 7
[1] Gerhart, P.M., and R. Jorgensen. Uncertainty Analysis: What Place in Performance Test Codes? ASME Paper 84-JPG-PTC-9, 1984.
[2] ASME PTC 19.1, *Measurement Uncertainty*, American Society of Mechanical Engineers, 1985.
[3] ASME PTC 11, *Fans*, American Society of Mechanical Engineers, 1984.
[4] Benedict, R. P., and J. S. Wyler. Engineering Statistics — With Particular Reference to Performance Test Code Work. ASME Paper 78-WA-PTC-2, 1978.
[5] Kline, S.J., and F. W. McClintock. Estimating Uncertainties in Single Sample Experiments. *Mechanical Engineering*, January 1953.
[6] Sotelo, E. Atmospheric Fluidized Bed Combustion Performance Guidelines. EPRI Report GS-7164, 1991.
[7] ISA Standard ANSI/ISA S51.1.
[8] 90-JPGC/PTC8, Effects of Spatial Distributions for Performance Testing

Appendix A
None.

Appendix B
None.

Appendix C
None.

Appendix D
None.

Appendix E
[1] Burbach, H. E., and A. Bogot. Design Considerations for Coal-Fired Steam Generators. Association of Rural Electric Generating Cooperatives, 1976.
[2] Combustion, Fossil Power Systems. Combustion Engineering, Inc., 1981.
[3] Durrant, O. W. Pulverized Coal — New Requirements and Challenges.
[4] EPRI CS-4283, Effects of Coal Quality and Power Plant Performance and Costs, Volume 3, 1986.

Copyright ASME International
Provided by IHS under license with ASME
No reproduction or networking permitted without license from IHS
Not for Resale

[5] Gray, R. J., and G. F. Moore. Burning the Sub-Bituminous Coals of Montana and Wyoming. ASME Winter Annual Meeting, 1974.

[6] Sadowski, R. S., and P. J. Hunt. Consequences of Specifying a Boiler Design Fuel When Source Commitments Are Not Firm. American Power Conference, 1978.

[7] Steam, Its Generation and Use. Babcock and Wilcox, 1992.

[8] Tuppeny, W. H. Effect of Changing Coal Supply on Steam Generator Design. American Power Conference, 1978.

[9] EPRI Fuels Characterization Project Facilities and Procedures. Babcock and Wilcox, RDD:90:4753-53-53-01:01, May 1989.

[10] Characterizing Fuel for Utility-Scale Atmospheric Fluidized-Bed Combustor. Final Report RP 718-2, June 1990.

[11] Characterization of Coals for Fluidized Bed Boilers. CSIRO v16/529, June 1989.

[12] Duqum, J. N., R. R. Chandran, M. A. Perna, D. R. Rowley, J. Pirkey, and E. M. Petrill. Fuels Characterization for AFBC Application. ASME 88-JPGC/FACT-4, September 1988.

[13] Fee, D.C., et al. Sulfur Control in Fluidized Bed Combustor: Methodology for Predicting the Performance of Limestone and Dolomite Sorbents. ANL/FE-80-10, September 1982.

[14] Celentano, D., et al. Review Methods for Characterizing Sorbents of AFBC's. Ninth International Conference on Fluidized Bed Combustion, May 3–7, 1987, pp. 501–510.

Copyright ASME International
Provided by IHS under license with ASME
No reproduction or networking permitted without license from IHS
Not for Resale

ISBN 0-7918-2475-6





Copyright ASME International
Provided by IHS under license with ASME
No reproduction or networking permitted without license from IHS

Not for Resale