ASME PTC*4.4 81 ■ 0759670 0054115 8 ■

AN AMERICAN NATIONAL STANDARD

ANSI/ASME
PTC 4.4-1981

Gas Turbine Heat Recovery Steam Generators

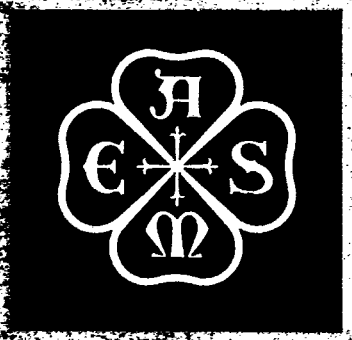

PERFORMANCE TEST CODES

THE AMERICAN SOCIETY OF MECHANICAL ENGINEERS
United Engineering Center
345 East 47th Street New York, N.Y. 10017

Copyright ASME International
Provided by IHS under license with ASME
No reproduction or networking permitted without license from IHS
Not for Resale

Gas Turbine Heat Recovery Steam Generators

PERFORMANCE TEST CODES

ANSI/ASME PTC 4.4 - 1981

THE AMERICAN SOCIETY OF MECHANICAL ENGINEERS
United Engineering Center
345 East 47th Street New York, N.Y. 10017

Copyright ASME International
Provided by IHS under license with ASME
No reproduction or networking permitted without license from IHS
Not for Resale

This code or standard was developed under procedures accredited as meeting the criteria for American National Standards. The Consensus Committee that approved the code or standard was balanced to assure that individuals from competent and concerned interests have had an opportunity to participate. The proposed code or standard was made available for public review and comment which provides an opportunity for additional public input from industry, academia, regulatory agencies, and the public-at-large.

ASME does not "approve," "rate," or "endorse" any item, construction, proprietary device, or activity.

ASME does not take any position with respect for the validity of any patent rights asserted in connection with any items mentioned in this document, and does not undertake to ensure anyone utilizing a standard against liability for infringement of any applicable Letters Patent, nor assume any such liability. Users of a code or standard are expressly advised that determination of the validity of any such patent rights, and the risk of infringement of such rights, is entirely their own responsibility.

Participation by federal agency representative(s) or person(s) affiliated with industry is not to be interpreted as government or industry endorsement of this code or standard.

Date of Issuance: August 31, 1981

No part of this document may be reproduced in any form,
in an electronic retrieval system or otherwise,
without the prior written permission of the publisher.

Copyright © 1981 by
THE AMERICAN SOCIETY OF MECHANICAL ENGINEERS
All Rights Reserved
Printed in U.S.A.

Copyright ASME International
Provided by IHS under license with ASME
No reproduction or networking permitted without license from IHS

Not for Resale

FOREWORD

PTC 4.4, Gas Turbine Heat Recovery Steam Generators, was originally formed as a reorganized PTC 4.1, Steam Generating Units, in September 1973 to prepare an Appendix 10 to PTC 4.1 to cover Heat Recovery Steam Generators for Combined Cycles. During the early meetings (May 11-12, 1976 and May 3-4, 1977) it was decided that the scope was beyond the capacity of an Appendix. At this point a charter was approved by the PTC Supervisory Committee to prepare a separate code entitled PTC 4.4, Gas Turbine Heat Recovery Steam Generators. The draft of PTC 4.4 was presented to the Supervisory Committee in February 1980 with final approval on January 26, 1981. This Performance Test Code has been approved as an American National Standard by the ANSI Board of Standards Review on February 3, 1981.

Copyright ASME International
Provided by IHS under license with ASME
No reproduction or networking permitted without license from IHS
Not for Resale

PERSONNEL OF PERFORMANCE TEST CODE COMMITTEE NO. 4.4 ON GAS TURBINE HEAT RECOVERY STEAM GENERATORS

R. J. Peyton, *Chairman*
P. F. Sokolowski, *Secretary*

A. K. Bakshi, Senior Mechanical Engineer, Brown & Root, Incorporated, U.K., 125 High Street, Colliers Wood, London, S.W. 19.2JR, England

F. R. Berg, Manager, Steam Projects, Brown Boveri Turbomachinery, Inc., 711 Anderson Avenue North, St. Cloud, Minnesota 56301

G. W. Bush, Mechanical Engineer, El Paso Natural Gas Company, P.O. Box 1492, El Paso, Texas 79978

D. Campbell, Chief, Mechanical Division, Public Service Electric & Gas Company, 200 Boyden Avenue, Maplewood, New Jersey 07040

R. J. Casey, Head, Systems & Components, Development Section, Naval Ship Systems Engineering Station, Philadelphia Naval Base, Philadelphia, Pennsylvania 19112

R. W. Foster-Pegg, Consultant, Westinghouse Electric Corporation, Combustion Turbine Systems Division, P.O. Box 251, Concordville, Pennsylvania 19331

J. W. Godbey, Technical Director, Heat Transfer Division, Henry Vogt Machine Company, P.O. Box 1918, Louisville, Kentucky 40201

H. R. Hazard, Staff Consultant, Battelle Columbus Laboratories, 505 King Avenue, Columbus, Ohio 43201

S. W. Lovejoy, Supervisor, Electric Production Results, Long Island Lighting Company, 175 East Old Country Road, Hicksville, New York 11801

S. L. Morse, Retired, Assistant Manager, Field Engineering, Babcock & Wilcox Company, 20 South Van Buren Avenue, Barberton, Ohio 44203

S. P. Nuspl, Development Engineer, Babcock & Wilcox Company, 20 South Van Buren Avenue, Barberton, Ohio 44203

C. E. Oliver, Mechanical Engineer, Chas. T. Main, Incorporated, 101 Huntington Avenue, Boston, Massachusetts 02199

R. J. Peyton, Engineering Manager, Gaithersburg Power Division, Bechtel Power Corporation, 15740 Shady Grove Road, Gaithersburg, Maryland 20760

W. O. Printup, Manager, Thermodynamic Engineering, General Electric Company, Medium Steam Turbine Department, 1100 Western Avenue, Building 264G2, Lynn, Massachusetts 01910

T. J. Radkevich, Manager of Plant Engineering, Westinghouse Electric Corporation, P.O. Box 251, Concordville, Pennsylvania 19331

R. W. Robinson, Manager, Field Testing and Performance Results, Combustion Engineering, Incorporated, 1000 Prospect Hill Road, Windsor, Connecticut 06095

P. F. Sokolowski, (Deceased), Fellow Engineer, Westinghouse Electric Corporation, Steam Turbine Division, N-206, P.O. Box 9175, Lester, Pennsylvania 19113

J. C. Stewart, Group Manager, Heat Transfer, The Lummus Company, 3000 South Post Oak Road, Houston, Texas 77056

E. J. Sundstrom, Energy Specialist, Dow Chemical U.S.A., Texas Division, Freeport, Texas 77541

Copyright ASME International
Provided by IHS under license with ASME
No reproduction or networking permitted without license from IHS
Not for Resale

L. Tomlinson, Manager, Combined Cycle Application Engineering, General Electric Company, Gas Turbine Division, 1 River Road, Building 500, Room 122, Schenectady, New York 12345

F. Vona, Group Manager of Performance, Erie City Energy Division, Zurn Industries, 1422 East Avenue, Erie, Pennsylvania 16501

J. J. Zeller, Senior Engineer, Southern California Edison Company, 2244 Walnut Grove Avenue, P.O. Box 800, Rosemead, California 91770

Copyright ASME International
Provided by IHS under license with ASME
No reproduction or networking permitted without license from IHS
Not for Resale

Personnel of the Performance Test Codes Supervisory Committee

J. H. Fernandes, *Chairman*
C. B. Scharp, *Vice-Chairman*

D. W. Anacki
R. P. Benedict
K. C. Cotton
W. A. Crandall
R. C. Dannettel
J. S. Davis
V. F. Estcourt
W. L. Garvin
A. S. Grimes
K. G. Grothues
R. Jorgensen
E. L. Knoedler
W. C. Krutzsch, Jr.
C. A. Larson
A. Lechner
P. Leung
F. H. Light
S. W. Lovejoy
W. G. McLean
J. W. Murdock
L. C. Neale
R. J. Peyton
W. A. Pollock
J. F. Sebald
J. C. Westcott

Copyright ASME International
Provided by IHS under license with ASME
No reproduction or networking permitted without license from IHS
Not for Resale

CONTENTS

Section 1	**Object and Scope**	1
1.1	Purpose	1
1.2	Object	1
1.3	Scope	1
1.4	Applicable Test Methods	1
1.5	Reference Codes	4
Section 2	**Definitions and Description of Terms**	5
2.1	Definition of Terms	5
2.2	Symbols and Description	6
Section 3	**Guiding Principles**	9
3.1	Agreements	9
3.2	Preparation for Tests	9
3.3	Method of Operation	10
Section 4	**Instruments and Methods of Measurement**	13
4.1	General	13
4.2	Flow Measurements	13
4.3	Steam and Water Temperature Measurement	15
4.4	Gas and Air Temperature Measurement	15
4.5	Other Measurements	15
4.6	Alternative Methods of Measurement	21
Section 5	**Computation of Results**	24
5.1	Efficiency by Input-Output Method	24
5.2	Efficiency by Thermal-Loss Method	25
5.3	Performance by Effectiveness Method	25
5.4	Calculation Procedures	26
Section 6	**Report of Results**	43
Section 7	**Appendix**	44
7.1	Guidance in Selection of Test Method	44
7.2	Gas Flow Measurement	47
7.3	Computer Program for Calculating Exhaust Gas Enthalpy	65
7.4	Discussion of Effectiveness	79
7.5	Discussion of Heats of Combustion	80

Copyright ASME International
Provided by IHS under license with ASME
No reproduction or networking permitted without license from IHS
Not for Resale

AN AMERICAN NATIONAL STANDARD

ASME PERFORMANCE TEST CODES
Code on
GAS TURBINE HEAT RECOVERY STEAM GENERATORS

SECTION 1 — OBJECT AND SCOPE

1.1 PURPOSE

1.1.1 The purpose of this Code is to establish procedures for the conduct and report of tests of heat recovery steam generators (HRSG) employed in combined cycle installations. Combined cycle, as used herein, shall be interpreted as a gas turbine exhausting into an HRSG, which may or may not be arranged for supplemental firing. This Code provides standard test procedures which will yield results having the highest level of accuracy consistent with current engineering knowledge and practice.

1.2 OBJECT

1.2.1 The purposes of testing under this Code are the determination of (a) efficiency, or effectiveness, at specified operating conditions; (b) capacity at specified operating conditions; (c) other related operating characteristics such as steam temperature and control range, inlet gas flow and temperature; pressure drops in combustion air, gas, steam and water circuits; quality and/or purity of steam; and air and bypass stack gas leakage.

1.2.2 A determination of any or all of the performance items listed in 1.2.1 may be necessary for other purposes, such as: (a) checking the actual performance against guarantee; (b) comparing these items with a standard of operation; (c) comparing different conditions or methods of operation; (d) determining the specific performance of individual parts or sections of the HRSG unit; (e) comparing performance when firing different fuels; (f) determining the effects of changes to equipment.

1.3 SCOPE

1.3.1 The rules and instructions given in this Code apply to HRSG units employed in combined cycle installations. Units operating with more than approximately 40 percent excess air shall be tested in accordance with the requirements of this Code. Units operating with less than approximately 20 percent excess air shall be tested in accordance with Performance Test Code PTC-4.1, Steam Generating Units. For units operating between 20 percent and 40 percent excess air, guidance as to the preferred test method can be obtained in Appendix 7.1. Orsat analysis is not required for tests performed under this Code. Testing of auxiliary equipment shall be governed by the Performance Test Code applying specifically to the auxiliary in question. This Code is not applicable to solid fuel fired units. The HRSG covered by this Code is encompassed by the envelope boundary shown in Fig. 1.1

1.4 APPLICABLE TEST METHODS

1.4.1 Instructions are given for three acceptable methods of testing HRSG units; two to determine efficiency and one for determining effectiveness as a measure of unit per-

Copyright ASME International
Provided by IHS under license with ASME
No reproduction or networking permitted without license from IHS
Not for Resale

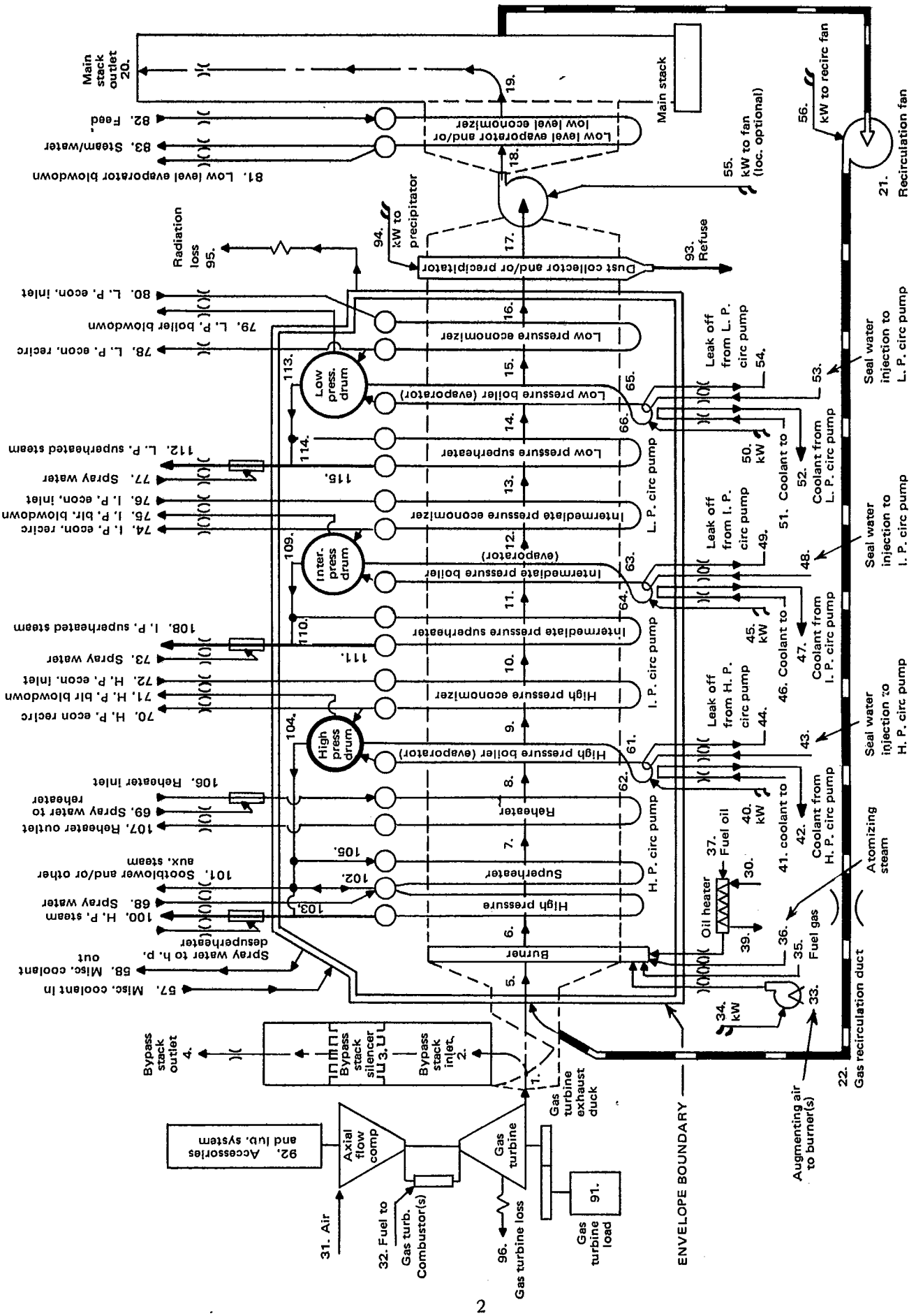

FIG. 1.1 GAS TURBINE HEAT RECOVERY STEAM GENERATING UNIT DIAGRAM
(See Table 1.1 for Key to Numerical Subscripts)

Copyright ASME International
Provided by IHS under license with ASME
No reproduction or networking permitted without license from IHS
Not for Resale

Copyright ASME International
Provided by IHS under license with ASME
No reproduction or networking permitted without license from IHS

TABLE 1.1

Key to Numerical Subscripts in Fig. 1.1

Gas Turbine Exhaust Points

1. Gas Turbine Exhaust Duct
2. Bypass Stack Inlet
3. Bypass Stack Silencer
4. Bypass Stack Outlet
5. Gas to Burner (Burner and Location Optional)
6. Gas Ent. H.P. Superheater
7. Gas Ent. H.P. Reheater
8. Gas Ent. H.P. Boiler
9. Gas Ent. H.P. Econ.
10. Gas Ent. I.P. Superheater
11. Gas Ent. I.P. Boiler
12. Gas Ent. I.P. Econ.
13. Gas Ent. L.P. Superheater
14. Gas Ent. L.P. Boiler
15. Gas Ent. L.P. Econ.
16. Gas Ent. Dust Coll. and/or Precipitator
17. Gas Ent. Fan (Loc. Opt.)
18. Gas Ent. Low Level Evap. and/or Low Level Econ.
19. Main Stack Inlet
20. Main Stack Outlet
21. Recirculation Fan Inlet
22. Gas Recirculation Duct

Compr, Pumps, Fans, Burners

31. Air to Axial Flow Comp.
32. Fuel to Gas Turb. Combustor(s)
33. Augmenting Air to Burner(s)
34. KW to Augmenting Air Fan(s)
35. Fuel Gas to Burner(s)
36. Atomizing Steam to Burner(s)
37. Fuel Oil to Burner(s)
38. Heating Fluid to Oil Heater
39. Heating Fluid from Oil Heater
40. KW to H.P. Circ Pump
41. Coolant to H.P. Circ Pump
42. Coolant from H.P. Circ Pump
43. Seal Water Injection to H.P. Circ Pump
44. Leak Off from H.P. Circ Pump
45. KW to I.P. Circ Pump
46. Coolant to I.P. Circ Pump
47. Coolant from I.P. Circ Pump
48. Seal Water Injection to I.P. Circ Pump
49. Leak Off from I.P. Circ Pump
50. KW to L.P. Circ Pump
51. Coolant to L.P. Circ Pump
52. Coolant from L.P. Circ Pump
53. Seal Water Injection to L.P. Circ Pump
54. Leak Off from L.P. Circ Pump
55. KW to Fan (Loc. Optional)
56. KW to Recirc Fan
57. Misc. Coolant In
58. Misc. Coolant Out

Water Side Points

61. H.P. Circ Pump Inlet
62. H.P. Circ Pump Outlet
63. I.P. Circ Pump Inlet
64. I.P. Circ Pump Outlet
65. L.P. Circ Pump Inlet
66. L.P. Circ Pump Outlet
67. Spray Water to H.P. Desuperheater
68. Spray Water to Mid-H.P. Desuperheater
69. Spray Water to Reheater
70. H.P. Econ. Recirc
71. H.P. Blr. Blowdown
72. H.P. Econ. Inlet
73. Spray Water to I.P. Desuperheater
74. I.P. Econ. Recirc
75. I.P. Blr. Blowdown
76. I.P. Econ. Inlet
77. Spray Water to L.P. Desuperheater
78. L.P. Econ. Recirc
79. L.P. Boiler Blowdown
80. L.P. Econ. Inlet
81. Low Level Evaporator Blowdown
82. Low Level Evap. and/or Low Level Economizer Feed
83. Low Level Evap. and/or Low Level Economizer Outlet

Miscellaneous

91. Gas Turbine Load
92. Accessories and Lub. System
93. Refuse (from Dust. Coll. and/or Prec.)
94. KW to Precipitator
95. Radiation Loss
96. Gas Turbine Loss

Steam Points

100. H.P. Superheated Steam
101. Sootblower and/or Other Aux. Steam
102. Sat. Tempering Steam Mid-Point Desuperheater
103. Sat. Tempering Steam Final
104. H.P. Saturated Steam
105. H.P. Superheater Inlet
106. Reheater Inlet
107. Reheater Outlet
108. I.P. Superheated Steam
109. I.P. Saturated Steam
110. Sat. Tempering Steam to I.P. Desuperheater
111. I.P. Superheater Outlet
112. L.P. Superheated Steam
113. L.P. Saturated Steam
114. Sat. Tempering Steam to L.P. Desuperheater
115. L.P. Superheater Outlet

* H.P. = High Pressure
L.P. = Low Pressure
I.P. = Intermediate Pressure

Not for Resale

formance. Of the two methods of determining efficiency, one is the direct measurement of input and output, hereinafter referred to as the input-output method and the other is the direct measurement of heat losses, hereinafter referred to as the thermal-loss method. The effectiveness method measures performance by comparing actual enthalpy drop of the gas to the maximum theoretically possible (MTP) enthalpy drop. The method to be followed in conducting the tests shall be a matter for agreement among all parties and the points of measurement shall be clearly defined in the report.

1.4.2 The input-output method requires the accurate measurement of those factors necessary for calculating the total heat input to the HRSG and the heat absorbed by the working fluid or fluids.

1.4.3 The thermal-loss method requires the accurate measurement of HRSG inlet and outlet temperatures plus the determination of other heat losses and credits occurring at the test point.

1.4.4 The effectiveness method requires the accurate measurement of HRSG gas temperature at appropriate locations.

1.4.5 An acceptable alternative method of determining the heat input to the HRSG, the gas turbine exhaust gas temperature, or the gas turbine exhaust gas flow in lieu of direct measurements is the resolution of a heat balance around the gas turbine. Refer to the procedure set forth in Section 4.6.

1.4.6 Guidelines for the proper selection and application of an appropriate test method are given in Appendix 7.1.

1.4.7 The adjustment of test results to include the effect of equivalent heat in auxiliary power to determine "net efficiency" is not a requirement of this Code.

1.4.8 This Code will apply to tests conducted when firing the same or different fuels simultaneously in the gas turbine and in the HRSG supplemental burner(s).

1.4.9 The determination of data of a research nature or other special data is not covered by this Code.

1.4.10 A report shall be prepared for each test, giving complete details of the conditions under which the test was conducted, including a record of test procedures and all data in form suitable for demonstrating that the agreed-upon objectives of the test were in fact attained.

1.5 REFERENCE CODES

PTC 1 – General Instructions
2 – Definitions and Values
3 – Fuels
4.1 – Steam Generating Units
19 – Instruments and Apparatus
22 – Gas Turbine Power Plants
6 – Report – Guidance for Evaluation of Measurement Uncertainty in Performance Tests of Steam Turbines

Copyright ASME International
Provided by IHS under license with ASME
No reproduction or networking permitted without license from IHS

Not for Resale

SECTION 2 — DEFINITIONS AND DESCRIPTION OF TERMS

2.1 DEFINITION OF TERMS

2.1.1 The following terms are either not elsewhere defined in this Code or are provided for clarification.

2.1.1.1 Total Net Heat Input. Total net heat input is defined as the sensible heat in the gas turbine exhaust gas flow, the chemical heat in any supplementary fuel (lower heating value of the fuel under constant pressure), plus any supplemental heat credits added to the working fluid(s), air, gas and other circuits which cross the envelope boundary as shown in Fig. 1.1. This total net heat input does not include the latent heat of the moisture in the gas turbine exhaust gas flow or from combustion of supplemental fuel. Heat input and output that cross the envelope boundary are involved in the efficiency calculations. Apparatus is outside the envelope boundary when it requires an outside source of heat or where the heat exchanged is not returned to the HRSG.

2.1.1.2 Heat Credits. Heat credits are defined as those amounts of heat added to the envelope of the HRSG other than the sensible heat in the gas turbine exhaust and the chemical heat in supplementary fuel. These heat credits include quantities such as sensible heat in the supplementary fuel, in entering air, and in atomizing steam, and heat from energy conversion in circulating pump and primary air and/or recirculating fans.

2.1.1.3 Capacity. Capacity of HRSG units is defined as either actual evaporation in terms of mass flow of steam per unit time or heat absorbed by the working fluids per unit time.

2.1.1.4 Efficiency. The efficiency of HRSG equipment determined within the scope of this Code is defined as the ratio of heat absorbed by the working fluids to the total net heat input as defined in paragraph 2.1.1.1. This definition excludes the equivalent heat in the power required by auxiliary apparatus external to the envelope (Fig. 1.1).

2.1.1.4.1 Efficiency for the two methods is expressed by the following equations:

Input-Output Method

$$\text{Efficiency (percent)} = \frac{\text{Output}}{\text{Input}} \times 100\%$$

$$= \frac{\text{Heat absorbed by working fluids}}{\text{Heat in gas turbine exhaust gas + heat in supplementary fuel + heat credits}} \times 100\%$$

For derivation see paragraph 5.4.2.

Thermal-Loss Method

$$\text{Efficiency (percent)} = \left(100 - \frac{\text{Heat losses}}{\text{Heat in gas turbine exhaust gas + heat in supplementary fuel + heat credits}}\right) \times 100\%$$

For derivation see paragraph 5.4.3.

2.1.1.5 Effectiveness. Effectiveness of HRSG equipment determined within the scope of this Code is defined as the ratio in percent of the actually measured enthalpy drop of the HRSG gas across the section being evaluated relative to the maximum theoretically possible (MTP) enthalpy drop of the gas as defined in paragraphs 2.1.1.6 and 2.1.1.7.

2.1.1.5.1 Effectiveness is expressed by the following equation:

$$\text{Effectiveness (percent)} = \frac{\text{Enthalpy drop of the HRSG gas}}{\text{MTP enthalpy drop of the HRSG gas}} \times 100\%$$

For derivation see paragraph 5.4.4.

2.1.1.6 Measured Enthalpy Drop. The measured enthalpy drop of the HRSG gas is defined as the difference between enthalpies as derived by methods detailed in this Code of HRSG gas at temperatures measured at the points of entering and leaving the section being evaluated.

2.1.1.7 Maximum Theoretically Possible (MTP) Enthalpy Drop. The MTP enthalpy drop of the HRSG gas is defined as the difference between the enthalpy of the gas entering and leaving the section being evaluated such as would occur if the section had infinite heat transfer surface with the result that the HRSG gas temperature would equal the water/steam temperature(s) at one or more

Copyright ASME International
Provided by IHS under license with ASME
No reproduction or networking permitted without license from IHS
Not for Resale

points in the section. Refer to paragraph 5.4.4 for amplification of the relationship between measured and MTP enthalpy drops of the HRSG gas.

2.1.1.8 Pinch Point. The pinch point is defined as the minimum temperature difference between the HRSG gas and the working fluid.

2.1.1.9 For conversions to SI units refer to PTC 2, Definitions and Values.

2.1.1.10 Heating Value. The lower heating value is utilized in this Code as this Code is intended to be utilized for gas turbine heat recovery steam generators. The lower heating value is utilized as a standard in the gas turbine industry. Further discussion of the relationship between lower heating value and higher heating value is found in Section 7.5. Higher heating value may be utilized if agreed to by the parties to the test.

2.2 SYMBOLS AND DESCRIPTION

Symbol	Description	Units
B	Total sensible heat credits added to the envelope	Btu per hr
B_f	Sensible heat in supplementary fuel	Btu per hr
B_{GR}	Sensible heat in HRSG gas recirculated	Btu per hr
B_{GT}	Sensible heat in HRSG gas	Btu per hr
B_{mA}	Sensible heat in moist augmenting air for supplementary firing	Btu per hr
B_x	Sensible heat from auxiliary drives within the envelope	Btu per hr
B_z	Sensible heat in atomizing steam for supplementary firing	Btu per hr
c_{pf}	Mean specific heat of supplementary fuel	Btu per lb-°F
c_{pfG}	Mean specific heat of gas turbine fuel	Btu per lb-°F
EF	Effectiveness ratio of enthalpy change	—
F_{GA}	Gas turbine fuel – inlet air ratio	lb fuel per lb moist air
F_{SG}	Supplementary fuel – HRSG gas ratio	lb fuel per lb gas
HRSG	Heat recovery steam generator	—
h_A	Enthalpy of dry air component	Btu per lb gas
h_a	Enthalpy of gas turbine overboard air or gas leakage	Btu per lb
h_{aR}	Enthalpy of gas turbine overboard air or gas leakage at reference temperature	Btu per lb
h_C	Enthalpy of carbon component	Btu per lb gas
h_c	Enthalpy of gas turbine cooling fluid	Btu per lb
h_D	Enthalpy of carbon dioxide component	Btu per lb gas
h_f	Lower heating value of supplementary fuel	Btu per lb
h_{fG}	Lower heating value of gas turbine fuel	Btu per lb
h_G	Enthalpy of HRSG gas at given temperature	Btu per lb
h_{GR}	Enthalpy of gas turbine exhaust gas at reference temperature	Btu per lb
h_{Gs}	Enthalpy of HRSG gas at a temperature equal to the saturated steam temperature	Btu per lb
h_H	Enthalpy of hydrogen component	Btu per lb gas
h_{IA}	Ideal gas enthalpy of dry air	Btu per lb
h_{IC}	Incremental enthalpy of carbon	Btu per lb
h_{ID}	Ideal gas enthalpy of carbon dioxide	Btu per lb
h_{IH}	Incremental enthalpy of hydrogen	Btu per lb
h_{IM}	Ideal gas enthalpy of carbon monoxide	Btu per lb
h_{Im}	Ideal gas enthalpy of moisture	Btu per lb
h_{IN}	Ideal gas enthalpy of nitrogen	Btu per lb
h_{IO}	Ideal gas enthalpy of oxygen	Btu per lb
h_{IS}	Incremental enthalpy of sulfur	Btu per lb
h_{IU}	Ideal gas enthalpy of sulfur dioxide	Btu per lb
h_{ix}	Enthalpy of steam to auxiliaries at exhaust pressure and initial entropy	Btu per lb
h_M	Enthalpy of carbon monoxide component	Btu per lb gas
h_m	Enthalpy of moisture component	Btu per lb gas

Copyright ASME International
Provided by IHS under license with ASME
No reproduction or networking permitted without license from IHS
Not for Resale

SYMBOLS AND DESCRIPTION (Cont'd)

Symbol	Description	Units
h_{mA}	Enthalpy of moist air at given temperature	Btu per lb
h_{mJ}	Enthalpy of water injected	Btu per lb
h_{mR}	Enthalpy of water injection at reference temperature	Btu per lb
h_N	Enthalpy of nitrogen component	Btu per lb gas
h_O	Enthalpy of oxygen component	Btu per lb gas
h_o	Enthalpy of gas turbine lubricating oil	Btu per lb
h_{RG}	Enthalpy of HRSG gas at reference temperature	Btu per lb
h_{RmA}	Enthalpy of moist air at reference temperature	Btu per lb
h_S	Enthalpy of sulfur component	Btu per lb gas
h_s	Enthalpy of steam	Btu per lb
h_{sJ}	Enthalpy of steam injected	Btu per lb
h_{sR}	Enthalpy of steam injected at reference temperature	Btu per lb
h_{sx}	Enthalpy of steam to auxiliaries	Btu per lb
h_U	Enthalpy of sulfur dioxide component	Btu per lb gas
h_w	Enthalpy of water at given temperature	Btu per lb
h_z	Enthalpy of water vapor at atomizing steam temperature	Btu per lb
h_{zR}	Enthalpy of atomizing steam at reference temperature	Btu per lb
L	Total of heat losses from steam generator	Btu per hr
L_c	Convective heat loss	Btu per ft^2-hr
L_G	Heat loss in moist HRSG gas	Btu per hr
L_H	Heat equivalent of gas turbine auxiliaries and miscellaneous losses	Btu per hr
L_R	Radiant heat loss	Btu per ft^2-hr
L_w	Heat loss in circulating pump systems	Btu per hr
L_β	Heat loss due to surface radiation	Btu per hr
MTP	Maximum theoretically possible	—
P_C	Weight of carbon in fuel	percent
P_D	Weight of carbon dioxide in fuel	percent
P_H	Weight of hydrogen in fuel	percent
P_M	Weight of carbon monoxide in fuel	percent
P_N	Weight of nitrogen in fuel	percent
P_O	Weight of oxygen in fuel	percent
P_S	Weight of sulfur in fuel	percent
P_U	Weight of sulfur dioxide in fuel	percent
Q_{GT}	Sensible heat in gas turbine exhaust gas	Btu per hr
Q_p	Heat equivalent of gas turbine power output	Btu per hr
Q_R	Heat radiation loss from gas turbine	Btu per hr
S_B	Heat loss surface area	ft^2
t_A	Temperature of ambient air	°F
t_f	Temperature of supplementary fuel	°F
t_G	Temperature of exhaust gas	°F
t_{mA}	Temperature of moist air	°F
t_R	Reference temperature (see paragraph 5.4.2.3.1)	°F
t_s	Temperature of steam	°F
t_w	Temperature of water	°F
t_z	Temperature of atomizing steam	°F
V_f	Volume of gaseous supplementary fuel	ft^3 per hr
W_a	Overboard air or gas leakage flow from gas turbine	lb per hr
W_{BP}	Gas turbine exhaust gas bypass flow	lb per hr
W_c	Gas turbine cooling liquid flow	lb per hr
W_f	Supplementary fuel flow	lb per hr

Copyright ASME International
Provided by IHS under license with ASME
No reproduction or networking permitted without license from IHS
Not for Resale

SYMBOLS AND DESCRIPTION (Cont'd)

Symbol	Description	Units
W_{fG}	Gas turbine fuel flow	lb per hr
W_{GR}	Recirculated HRSG gas flow	lb per hr
W_{GT}	Gas turbine exhaust gas flow	lb per hr
W_{mF}	Moist augmenting air flow for supplementary firing	lb per hr
W_{mJ}	Gas turbine water injection flow	lb per hr
W_o	Gas turbine lubricating oil flow	lb per hr
W_s	Steam flow	lb per hr
W_{sJ}	Gas turbine steam injection flow	lb per hr
W_{sx}	Steam flow to auxiliaries	lb per hr
W_w	Water flow	lb per hr
W_z	Atomizing steam flow	lb per hr
w_A	Weight ratio of dry air component	lb per lb gas
w_C	Weight ratio of carbon component	lb per lb gas
w_D	Weight ratio of carbon dioxide component	lb per lb gas
w_{dA}	Weight ratio of dry air	lb per lb dry air
w_F	Weight ratio of total fuel	lb per lb gas
w_f	Weight ratio of supplementary fuel component	lb per lb gas
w_{fG}	Weight ratio of gas turbine fuel	lb per lb air
w_H	Weight ratio of hydrogen component	lb per lb gas
w_M	Weight ratio of carbon monoxide component	lb per lb gas
w_m	Weight ratio of moisture component	lb per lb gas
w_{mA}	Weight ratio of moisture in air	lb per lb gas
w_{mJe}	Weight ratio of injection water or steam, atomizing steam for supplementary burners, or moisture from evaporative coolers	lb per lb dry air
w_N	Weight ratio of nitrogen component	lb per lb gas
w_O	Weight ratio of oxygen component	lb per lb gas
w_S	Weight ratio of sulfur component	lb per lb gas
w_T	Total weight ratio of HRSG gas mixture	lb per lb dry air
w_U	Weight ratio of sulfur dioxide component	lb per lb gas
η_B	Gas turbine burner efficiency	percent
η_{SG}	Steam generator efficiency	percent
η_x	Efficiency of auxiliary drives	percent
γ_f	Supplementary fuel gas specific weight	lb per ft^3

*All references in 2.2 to lb (pounds) are lbm (pounds mass).

Copyright ASME International
Provided by IHS under license with ASME
No reproduction or networking permitted without license from IHS
Not for Resale

SECTION 3 — GUIDING PRINCIPLES

3.1 AGREEMENTS

3.1.1 Items on Which Agreement Shall Be Reached. Definite agreement shall be reached as to the specific object and scope of the test and to the method of operation. Any specified operating condition or performance that is pertinent to the object of the test shall be ascertained. Any omissions or ambiguities as to any of the conditions are to be eliminated or their values or intent agreed upon before the test is started. Agreements shall be reached prior to the tests, upon such items as the following:

3.1.1.1 Object of test and methods of operation.

3.1.1.2 The intent of any contract or specification as to operating conditions and guarantees.

3.1.1.3 Means for maintaining constant test conditions.

3.1.1.4 Location, type, and calibration of instruments.

3.1.1.5 If efficiency determination is to be made:
(a) Thermal-loss or input-output method;
(b) Method of HRSG gas flow determination;
(c) Heat credits and losses to be measured;
(d) Heat credits and losses to be assigned where not measured;
(e) Acceptable deviation in efficiency between duplicate runs.

3.1.1.6 If effectiveness determination is to be made:
(a) Point at which inlet HRSG gas temperature is measured;
(b) Point at which outlet HRSG gas temperature is measured;
(c) Method of establishing location of pinch point within the HRSG envelope boundary;
(d) Establishing the value of the MTP enthalpy drop;
(e) Acceptable deviation in effectiveness between duplicate runs.

3.1.1.7 If capacity determination is to be made:
(a) Method of measuring steam flow;
(b) Acceptable deviation in capacity between duplicate runs.

3.1.1.8 Organization and qualifications of test personnel, arrangements for their direction, and arrangements for recording the readings and observations, and calculating the test results.

3.1.1.9 Establishment of acceptable operational conditions, number of load points, duration of runs, basis of rejection of runs and procedures to be followed during the test.

3.1.1.10 Cleanliness of unit initially and how this is to be maintained during the test.

3.1.1.11 The fuel to be fired, the method and frequency of obtaining fuel samples and the laboratory to make the analysis.

3.1.1.12 Observations and readings to be taken.

3.1.1.13 Corrections to be made for deviations from specified operating conditions and their numerical value.

3.1.1.14 Limits of error in measurement and sampling.

3.1.1.15 Allowable leakage.

3.1.1.16 Use of computerized data logging and computer programs for calculations.

3.2 PREPARATION FOR TESTS

3.2.1 General. Every precaution shall be employed in making preparations for conducting any test. Indisputable records shall be made to identify the equipment to be tested and the exact method of testing selected.

3.2.1.1 The entire HRSG shall be checked for leakage.

3.2.1.2 It shall be determined if the fuel to be fired during the test is substantially as intended.

3.2.1.3 Any departures from standard or previously specified conditions in physical state of equipment, cleanliness of heating surfaces, fuel characteristics or stability of load, shall be described clearly in the report of the test.

Copyright ASME International
Provided by IHS under license with ASME
No reproduction or networking permitted without license from IHS
Not for Resale

3.2.2 Preliminary Tests. A preliminary run shall be made for the purpose of:

3.2.2.1 Determining whether the equipment is in suitable condition for the conduct of the test;

3.2.2.2 Making minor adjustments, the needs for which were not evident during the preparation for test;

3.2.2.3 Checking the operation of all instruments;

3.2.2.4 Training the observers and other test personnel.

3.3. METHOD OF OPERATION

3.3.1 General. The HRSG and associated equipment shall be in normal operation during the test. No special adjustments shall be made to the HRSG, fuel burning equipment, dampers, etc., that are inappropriate for normal and continuous operation.

3.3.2 Performance Tests. A performance test shall be undertaken only when the parties to the test agree that the HRSG is operating to their satisfaction and is, therefore, ready for test. The performance test should be started as soon as the HRSG is in satisfactory condition, provided the load and other governing factors are suitable.

3.3.2.1 The parties to the test may designate a person to direct the test and serve as mediator in the event of disputes as to the accuracy of observations, conditions, or methods of operation.

3.3.2.2 All heat transfer surfaces, both internal and external, should be commercially clean (normal operating cleanliness) before starting the test. During the test, only the amount of cleaning shall be permitted as is necessary to maintain normal operating cleanliness.

3.3.2.3 After a preliminary run has been made, it may be declared an acceptance run if agreed to and provided that all the requirements of an acceptance run have been met.

3.3.3 Stability of Test Conditions. Preparatory to any test run, the equipment shall be operated for a sufficient time to establish steady state conditions. Steady state is achieved when the key parameters, associated with the test objectives have been stabilized. Stability will be achieved when continuous monitoring indicates the readings have been within the suggested maximum permissible variation shown in Table 3.1 for a period of time that is agreed upon by the parties to the test.

TABLE 3.1

Suggested Maximum Permissible Variations in Test Conditions

Variable	Variation of Any Station Observation from Reported Average Test Condition During a Test Run
(a) Water flow to economizer	±2%
(b) Economizer recirculation flow	±3%
(c) Desuperheating water flow	±4%
(d) Blowdown flow	±4%
(e) Fuel flow to gas turbine	±2%
(f) Supplemental fuel flow	±2%
(g) Gas turbine power output	±2%
(h) Gas temperature to boiler	±10°F
(i) Stack gas temperature	±10°F
(j) Water temperature to economizer	±10°F
(k) Steam temperature leaving superheater	±10°F
(l) Ambient temperature	±5°F
(m) Barometric pressure	±1%
(n) Steam pressure	±2%
(o) Flow	
Air	±2%
HRSG gas	±2%
Gas turbine exhaust	±2%

3.3.3.1 Each observation of an operating condition during a test run shall not vary from the reported average for that operating condition during the complete run by more than the amount shown in Table 3.1, except by mutual agreement between the parties to the test. If operating conditions vary during any test run beyond the limits prescribed in Table 3.1, and if these variations are not covered by mutual agreements, the test run shall be discarded.

3.3.4 Frequency of Observations. A sufficient number of readings shall be taken at suitably spaced intervals to show the range of fluctuations, to show that stable test conditions exist during the test, and to provide a suitable average for the test run. When differential pressure measurement devices are used with venturi tubes, flow nozzles, or orifice plates for subsequently determining quantity measurements, the flow indicating element shall be read at five-minute intervals or more frequently when deemed necessary. Other primary measurements should be made at no more than ten-minute intervals.

Copyright ASME International
Provided by IHS under license with ASME
No reproduction or networking permitted without license from IHS

Not for Resale

3.3.5 Duration of Test Runs. When determining the performance of the HRSG, the test run shall be of not less than two hours steady duration.

3.3.5.1 The actual duration of all runs from which the final test data are derived shall be clearly stated in the test report.

3.3.6 Starting and Stopping Procedures. Combustion conditions, rates of flow, and all controllable temperatures and pressures shall be as nearly as possible the same at the end of the run as at the beginning. There must be reasonable assurance that the temperature of the refractories and all other parts of the equipment have reached equilibrium before the run is started.

3.3.7 Operating Conditions. Every effort shall be made to run the tests under the specified conditions such as type of fuel, flows, pressures and temperatures, or as close to the specified conditions as possible in order to avoid the application of corrections to the test results, or to minimize the magnitude of the corrections.

3.3.7.1 During each test, all quantities shall be recorded as actually observed. Corrections and corrected values shall be entered separately in the report of the test.

3.3.8 Corrections to Test Results. Corrections shall be applied to the test results for any deviations of the test conditions from those specified. Correction factors may be in the form of curves or numerical values. The method of applying corrections shall be carried out as required in Section 5.4.

3.3.8.1 Auxiliary tests may be run for the purpose of verifying the value of selected corrections factors. Any such special tests shall be completely described in the test report, including the methods employed and the results obtained.

3.3.9 Rejection of Tests. Should serious inconsistencies in the observed data be detected during a run or during the calculation of the results which affects the validity of the results, the run shall be rejected completely, or in part if the affected part is at the beginning or at the end of the run. A run that has been rejected shall be repeated, if necessary, to attain the objectives of the test.

3.3.10 Records and Test Reports. The test observations shall be entered on previously prepared forms which constitute original log sheets to be authenticated by the observers' signatures. For the tests, a complete set of unaltered log sheets and recorded charts or facsimiles thereof shall become the property of each party to the test.

The observations shall include the date and time of day. They shall be the actual readings without application of any instrument corrections. The log sheets and any recorded charts should constitute a complete record. It is recommended that sufficient space be left at the bottom of each log sheet to record average reading, correction for instrument calibration, and translation to desired units for calculations. Computer data logging is acceptable provided all required data points are recorded.

3.3.10.1 Records made during tests shall show the extent of fluctuations (i.e., minimum and maximum values of instrument readings) of the instruments in order that data may be available for determining influence of such fluctuations on the accuracy of calculated results.

3.3.10.2 Every event connected with the progress of a test, however unimportant it may appear at the time, shall be recorded on the test log sheets together with the time of occurrence and the name of the observer. Particular care should be taken to record any adjustments made to any equipment under test, whether made during a run or between runs. The reason for each adjustment shall be stated in the test record.

3.3.11 Instruments and Methods of Measurement. The necessary instruments and procedures for making measurements shall be accurate and reliable and shall be as required in Section 4, so that accurate observations may be made.

3.3.11.1 Section 4 presents the essential mandatory requirements for instruments, methods, and precautions which shall be employed, unless the parties to the test mutually agree to the contrary. The Supplements on Instruments and Apparatus (PTC 19 series) provide general and authoritative information concerning instruments and their use and shall be consulted if sufficient information is not included in this Code.

3.3.12 Thermodynamic Properties. Except with written agreement to the contrary, the properties of steam shall be obtained from the "1977 ASME Steam Tables" and the enthalpy of gas shall be calculated as shown in paragraph 5.4.2.4. If steam and water properties are obtained from calculations using a computer, the computer program shall be the IFC Formulations for Industrial Use.

3.3.13 Tolerances and Limits of Error. This Code does not include consideration of overall tolerances or margins on performance guarantees. The test results shall be reported as calculated from the test observations with such corrections as are provided in this Code.

Copyright ASME International
Provided by IHS under license with ASME
No reproduction or networking permitted without license from IHS Not for Resale

3.3.13.1 Allowances for errors of measurement and sampling are permissible provided they are agreed upon in advance by the parties to the test and clearly stated in the test report. The limits of probable error on calculated efficiency, effectiveness, or capacity shall be taken as the square root of the sum of the squares of the individual effects on efficiency, effectiveness or capacity.

3.3.13.2 Whenever allowances for probable errors of measurement and sampling are to be taken into consideration, the reported test results shall be qualified by the statement that the error in the results may be considered not to exceed a given plus or minus percentage, this value having been determined in accordance with the foregoing method for calculating limits of probable error. For guidance refer to ASME PTC 6 Report–1969, "Guidance for Evaluation of Measurement Uncertainty in Performance Tests of Steam Turbines."

3.3.13.3 Guidance as to the selection of the most appropriate test method is given in Section 7, Appendix 7.1.

Copyright ASME International
Provided by IHS under license with ASME
No reproduction or networking permitted without license from IHS
Not for Resale

SECTION 4 — INSTRUMENTS AND METHODS OF MEASUREMENT

4.1 GENERAL

4.1.1 This section describes the instruments, methods, and precautions that should be employed in testing HRSG units under this Code. For procedures to obtain some of the supplementary information, other authoritative codes and standards are cited and shall be considered as part of this Code. For probable measurement error see Appendix 7.1.

4.1.2 The instruments generally required for a code test are presented in the following list for checking purposes. Only those instruments necessary for attainment of the desired objective need be used. In some cases it may be necessary to use instruments not included in the list.

4.1.2.1 **Quantity Measurements.** Scales, weigh tanks, volumetric tanks, or flow meters to measure fuel, steam and water flows. Dynamic meters, Pitot and Fechheimer probes to measure gas and air flows.

4.1.2.2 **Temperature Measurements.** Mercury thermometers, thermocouples, and resistance temperature detectors.

4.1.2.3 **Pressure Measurements.** Bourdon gauge, deadweight gauges, manometers, and electronic pressure transmitters.

4.1.3 The PTC 19 series generally describes the most accurate means for determining the required parameters. For typical measurement accuracies and their effect on overall test results refer to Appendix 7.1.

4.2 FLOW MEASUREMENTS

4.2.1 **General.** Accurate measurement of flow is vital in determining overall plant performance. The several techniques available each have limitations as to accuracy and magnitude of flow for which they can conveniently be used. The most accurate method of measuring fluid flows is by weighing, but this is usually limited to shop tests and/or small quantities.

4.2.2 **Liquid Fuel Quantity Measurement.** Positive displacement meters may be used if calibrated under conditions simulating those existing during the test in regard to grade of fuel, temperature, pressure, rate of flow and meter location. If greater accuracy is required for this measurement, it is best obtained by means of weigh tanks. The next most accurate method is by means of volumetric tanks. Measuring devices shall be calibrated prior to and after the test such that liquid fuel flow can be measured to an accuracy within ±0.5 percent in the range of loads measured.

4.2.2.1 Leakage of fuel between point of measurement and point of firing shall be measured and accounted for in the flow calibration. Branch connections on the fuel piping shall be either blanked off or provided with double valves and suitable telltale drains for detecting leakage. Leakage from valve stuffing boxes shall be prevented. Any unavoidable leakage from pump stuffing boxes, or elsewhere, shall be collected and accounted for. Where an oil return system from the burners is used, both supply and return flows shall be measured by calibrated meters.

4.2.2.2 If fluctuations in meter readings are present, the variation of the indicated maximum or minimum reading shall be minimized and must be made to be less than ± 5.0 percent by the introduction of a cushion chamber, surge chamber, or other means of absorbing the pulsations between the source of pulsation and the primary device before measurement is considered acceptable. For further discussion of pulsating flow measurement see ASME Research Publication, "Fluid Meters — Their Theory and Application," paragraphs 106 to 109, inclusive.

4.2.3 **Gaseous Fuel Quantity Measurement.** Measurement of gaseous fuel used in testing HRSG units requires the use of the orifice, flow nozzle or venturi. Measuring devices shall be calibrated prior to and after the test such that gaseous fuel flow can be measured to an accuracy within ±0.35 percent in the range of loads measured.

4.2.4 **Water Flow Measurement.** The measurement of water flow into the HRSG requires the use of the venturi, nozzle, orifice, weigh tank, or volumetric tank.

Copyright ASME International
Provided by IHS under license with ASME
No reproduction or networking permitted without license from IHS
Not for Resale

4.2.4.1 Venturi, Nozzle, or Orifice. Water quantity may be measured by venturi, nozzle, or orifice. Measuring devices shall be calibrated prior to and after test such that water flow can be measured to an accuracy within ±0.75 percent in the range of loads measured.

4.2.4.1.1 The recommendations of ASME Research Publication, "Fluid Meters – Their Theory and Application," shall be followed with reference not only to the design, construction, calibration and use of flow measuring elements, but also to their location and installation in the pipelines and the installation of the connecting piping system between the primary element and manometer. All calculations of flow rate from the observed differentials, pressures and temperatures shall be made in accordance with the provisions of the above reference.

4.2.4.1.2 The venturi, nozzle or orifice selected shall be such that the differential pressure at any test output as shown by the manometer is at least five inches of manometric liquid.

4.2.4.1.3 If fluctuations in flow are present refer to paragraph 4.2.3.1.

4.2.5 Steam Flow Measurement. Output steam flow should preferably be obtained from measurement of water flow as described in paragraph 4.2.4, corrected for any addition or withdrawal of fluid beyond the measuring element, such as continuous blowdown, desuperheating spray water, boiler circulating pump injection water, etc.

4.2.5.1 For determining capacity or other related operating characteristics, the output quantity of main and reheat steam may be determined by means of venturi, nozzle, or thin plate sharp edged orifice.

4.2.5.2 Reheat steam flow, if not measured, can be computed by a material balance calculation.

4.2.5.3 Measuring devices shall be calibrated prior to and after the test such that steam flow can be measured to an accuracy of ±0.75 percent in the range of loads measured.

4.2.5.4 The recommendations of ASME Research Publication, "Fluid Meters – Their Theory and Application," shall be followed with reference not only to the design, construction, calibration and use of nozzles and orifices, but also to their location and installation in the pipeline and the arrangement of the connecting piping system between the primary element and the differential pressure measuring instrument.

4.2.5.5 Differential pressures at the primary metering element shall be measured by a direct reading manometer, differential pressure gauge, or pressure transducer.

4.2.5.6 Precautions and Corrections Relating to Output Quantity Measurements. All leakage which may affect test results shall be eliminated; otherwise it must be measured and accounted for. Errors due to steam or water entering or leaving the equipment under test, through connecting piping, shall be prevented by blanking off such connections or by providing open telltale drains between double valves to give visible assurance that no flow exists. Leakage tests shall be made in accordance with I & A, Leakage Measurement, PTC 19.21.

4.2.5.6.1 Blowing down during a run shall be avoided. If this is not possible, the amount of heat can be determined by heat balance around the blowdown heat recovery system.

4.2.5.6.2 Soot blower operation during a run shall be avoided.

4.2.6 Augmenting Air and HRSG Gas Flows. Augmenting air and HRSG gas flows can be determined as shown in this section.

4.2.6.1 Flow Determination by Flow Meter. Methods of measurement available for HRSG gas and augmenting flow for testing purposes are covered in ASME Research Publication, "Fluid Meters – Their Theory and Application." Where continuous monitoring of such flows is required, nozzles, venturis, or orifices can be installed following procedures outlined in foregoing reference.

4.2.6.2 Flow Determination by Velocity Traverse. Since flows are not usually uniform in the duct cross sections, a suitable means of averaging velocity head readings must be used. One satisfactory method divides the traversed plane into multiple equal area sections with the resultant average velocity pressure being taken as the square of the average of the square roots of the individual velocity pressures. This method is described in detail in Appendix 7.2.

4.2.6.2.1 Where the gas flow direction is not normal to the plane of traverse, it is recommended that a directional probe, such as the Fechheimer probe, be used to determine the velocity and direction of flow. By using the yaw angle correction it is possible to measure the magnitude of the velocity vector in the direction of flow in one plane. Section 7.2 provides detailed information on the procedure for making the probe insertion.

Copyright ASME International
Provided by IHS under license with ASME
No reproduction or networking permitted without license from IHS
Not for Resale

4.3 STEAM AND WATER TEMPERATURE MEASUREMENT

4.3.1 Saturated steam temperature shall be determined by the pressure in the steam drum. The temperature of superheated steam shall be measured as close to the superheater and/or reheater outlets to minimize error from heat loss. Feedwater temperatures shall be measured as close to the economizer inlet and boiler inlet as possible. Steam and water temperatures, considered to be of primary importance, shall each be taken at two different points as close together as practical and the mean of the two readings after corrections to each shall be the temperature of the fluid. Discrepancies between the two corrected readings which exceed 0.25 percent for steam and 0.50 percent for water shall be investigated.

4.3.1.1 Mercury-in-glass thermometers, resistance temperature detectors, or thermocouples are acceptable for temperature up to 760°F. Above 760°F resistance temperature detectors or thermocouples shall be used.

4.3.1.2 All temperature measuring devices shall be calibrated before and after tests. When employing mercury-in-glass thermometers, proper allowance shall be made for differences between thermometer stem temperature during calibration and test. See I & A, Temperature Measurement, PTC 19.3. All temperature measuring instruments and wells shall be constructed, installed, and the instruments calibrated and operated in accordance with I & A Temperature Measurement, PTC 19.3, except that where the fluid stream Reynolds number exceeds 3.5×10^5, appropriate allowances are required in well design to account for the increase in Strouhal number. Temperature measuring devices shall be installed so that adverse effects of radiation and/or conduction will be minimal.

4.3.1.3 The temperature sensing element and/or well shall be located such that it is subjected to the velocity of the measured fluid and not in a dead fluid pocket.

4.4 GAS AND AIR TEMPERATURE MEASUREMENT

4.4.1 **Inlet and Outlet HRSG Gas Temperature.** HRSG gas temperature measurement at the entrance and exit of the HRSG is required. This may in certain instances be measured at other points such as the inlet and discharge of augmenting air or HRSG gas recirculating fans.

4.4.1.1 To minimize the effect of HRSG gas temperature stratification, HRSG gas temperatures must be taken at the same number of points as are used for HRSG gas velocity measurements, paragraph 4.2.6.2.

4.4.1.2 If a preliminary survey of HRSG gas flow indicates severe stratification, it is recommended that the temperature measurements at individual locations in the duct cross section be weighted in proportion to the HRSG gas velocity at the corresponding locations and an average of the weighted temperature be used to represent the HRSG gas temperature at that cross section.

4.4.1.3 Choice of temperature measuring instruments depends upon the conditions of the individual case. The selection, design, construction, calibration, installation and operation of temperature measuring instruments shall be in accordance with I & A, Temperature Measurement, PTC 19.3.

4.4.1.4 If the requirement of a test necessitates measuring HRSG gas temperatures in a zone that prevents accurate determination by bare thermocouples, that is, whenever a thermocouple can radiate to or from a surface (surfaces or sky outside the stack included) at a temperature different from that of the gas being measured, special probes using a high velocity thermocouple principle shall be employed. As a guide, the aspirating rate should be increased until temperature readings level out.

4.5 OTHER MEASUREMENTS

4.5.1 **Steam and Water Pressures.** Pressure gauges shall be located where they will not be affected by any disturbing influences such as extremes of heat, cold, and vibration and shall be located in convenient positions for reading While calibrated Bourdon tube test gauges or deadweight gauges may be used, the use of the latter is preferred.

4.5.1.1 Gauge connections shall be as short and direct as possible. Gauges shall be protected with syphons or their equivalent. Convolutions of syphons shall be as few in number as possible, consistent with the gauge remaining cool, because of their tendency to introduce errors due to unbalanced water columns in the convolutions. All gauge connections shall be tight.

4.5.1.2 Pressure connections shall be located and installed with extreme care in order to avoid errors due to impact and eddies. Pressure gauge pulsations shall not be dampened by throttling the connection to the gauge or by the use of commercial gauge dampers, but a volume chamber may be employed. The arrangement may be considered satisfactory if the maximum and minimum values of

Copyright ASME International
Provided by IHS under license with ASME
No reproduction or networking permitted without license from IHS
Not for Resale

the instantaneous pressure do not differ by more than 2.0 percent from the mean value. Bourdon tube test gauges shall be calibrated, installed and used in accordance with I & A, Pressure Measurement, PTC 19.2. These gauges shall be calibrated before and after the test and at intervals of not more than one week if the test is extended beyond that period.

4.5.2 *Quality and Purity of Steam.* Steam quality is the percent by weight of dry steam in a mixture of saturated steam and suspended droplets of water at the same temperature. Steam purity is the solids content in a sample of condensed steam.

4.5.2.1 **Measurement of Steam Quality.** The following methods listed below in the order of preference, may be used to determine steam quality: (1) Continuous Determination of Sodium, ASTM D 2791; (2) Radioactive Tracer Method; (3) Calorimeter for Direct Determination of Quality; and (4) Additional Methods if Mutually Agreed Upon. Selection of one of these methods for determining steam quality must be based upon the conditions peculiar to a particular steam supply system, since each method has limitations which govern its use.

4.5.2.2 **Flame Photometry Method for Sodium.** The sodium flame photometry method is based upon the accurate determination of sodium concentrations in condensed steam samples and is, therefore, contingent upon the presence of sodium salts in the HRSG water of the steam supply system. It is not recommended where a large percentage of the solids present do not contain sodium. Sodium analysis shall be performed in accordance with ASTM D 2791, Method B; ASTM D 1428, Method B; or ASTM D 2186, Method C. Solids in the steam may be calculated as follows:

$$\text{Total solids in steam (mg/l)} = \frac{\text{Sodium in steam (mg/l)}}{\text{Sodium in HRSG water (mg/l)}} \times \text{Total solids in HRSG water (mg/l)}$$

Steam quality may be calculated as follows:

$$x\ (\%) = 100 - \left(\frac{\text{Sodium in steam (mg/l)} \times 100}{\text{Sodium in HRSG water (mg/l)}}\right)$$

The accuracy of this method for determining quality is impaired when volatile salts are present in the steam.

4.5.2.3 **Radioactive Tracer Method.** This method is based upon the accurate measurement of radioactive nuclides, such as sodium-24, in condensed steam and HRSG water samples. The activity of the samples can be determined by using a multichannel analyzer with energy spectrum and half-life used to identify the specific nuclide. Steam quality can be calculated as follows:

$$x\ (\%) = 100 - \left(\frac{\text{Activity in steam} \times 100}{\text{Activity in HRSG water}}\right)$$

Radioactive tracers have been used for determining steam quality with excellent results. The method had not been sufficiently developed at the time PTC 19.11-1970 was published, to include them in that supplement, however, PTC 6-1976 has a complete description of methods.

4.5.2.4 **Calorimeter Method.** Observations by means of a properly constructed calorimeter will provide the means for accurately calculating the percentage moisture present in a given sample. The difficulty is that there can never be assurance that the sample is representative of the average condition of the steam flowing in the pipe. Techniques for sampling are described in PTC 19.11, which should be consulted whenever any of the above test methods are used and particularly when the calorimeter is used.

4.5.2.5 **Sodium Ion Electrode, ASTM D-2791, Method A.** This method employs an electrode and instrument similar to those used for the measurement of the hydrogen-ion concentration in aqueous solutions (pH), except that the electrode is specific for measuring the sodium ion concentration. This device is an alternative to the flame spectrophotometer as described in paragraph 4.5.2.2.

4.5.2.6 **Determination of Steam Purity.** The following methods may be used to determine steam purity: (1) Electric Conductivity; (2) Sodium Ion Determination of Steam Purity; (3) Dry Residue (Gravimetric) Test; and (4) Silica and Metal Oxides.

The above analysis shall be performed in accordance with PTC 19.11.

4.5.3 **Moisture in Augmenting Air.** The moisture carried by augmenting air must be taken into consideration when calculating the efficiency. This moisture may be determined with the aid of a sling-type psychrometer or similar device. From the dry- and wet-bulb thermometer readings taken from the psychrometer at the observed barometric pressure, the absolute or specific humidity (pounds of moisture per pound of dry air) can be determined either from the chart published in I & A, Humidity Determinations, PTC 19.18, or from psychrometric tables published in U. S. Weather Bulletin No. 235.

4.5.3.1 The dry- and wet-bulb temperatures may be determined at the atmospheric air inlet to the system. This is possible since the desired quantity is pounds of moisture per pound of dry air for combustion. Since the

Copyright ASME International
Provided by IHS under license with ASME
No reproduction or networking permitted without license from IHS
Not for Resale

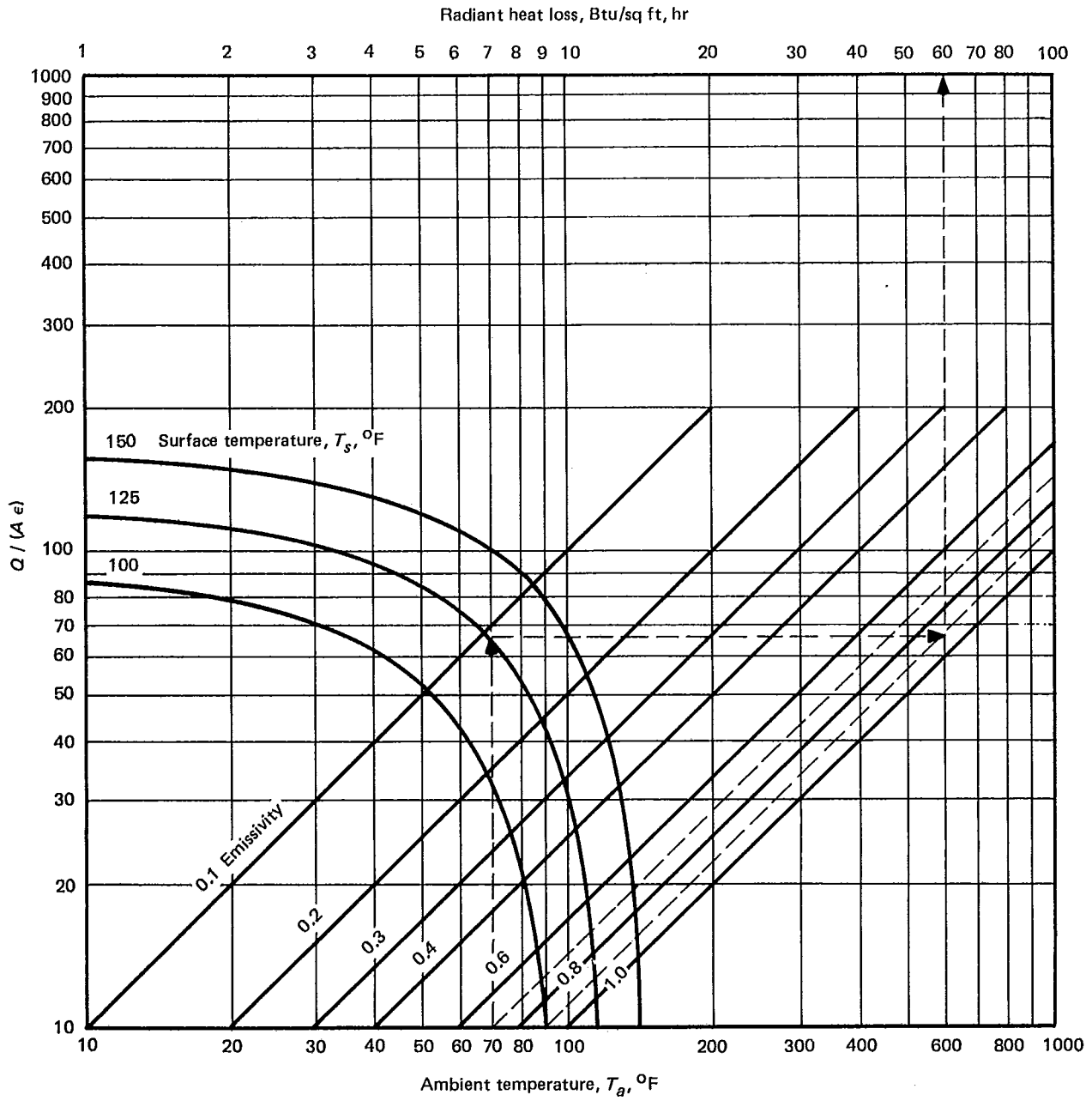

$$Q/A = 0.174\epsilon\left[\left(\frac{460 + T_S}{100}\right)^4 - \left(\frac{460 + T_a}{100}\right)^4\right]$$

where

Q/A = heat loss, Btu/sq ft, hr
ϵ = emissivity
T_S = surface temperature, °F
T_a = ambient temperature, °F

FIG. 4.1

Copyright ASME International
Provided by IHS under license with ASME
No reproduction or networking permitted without license from IHS
Not for Resale

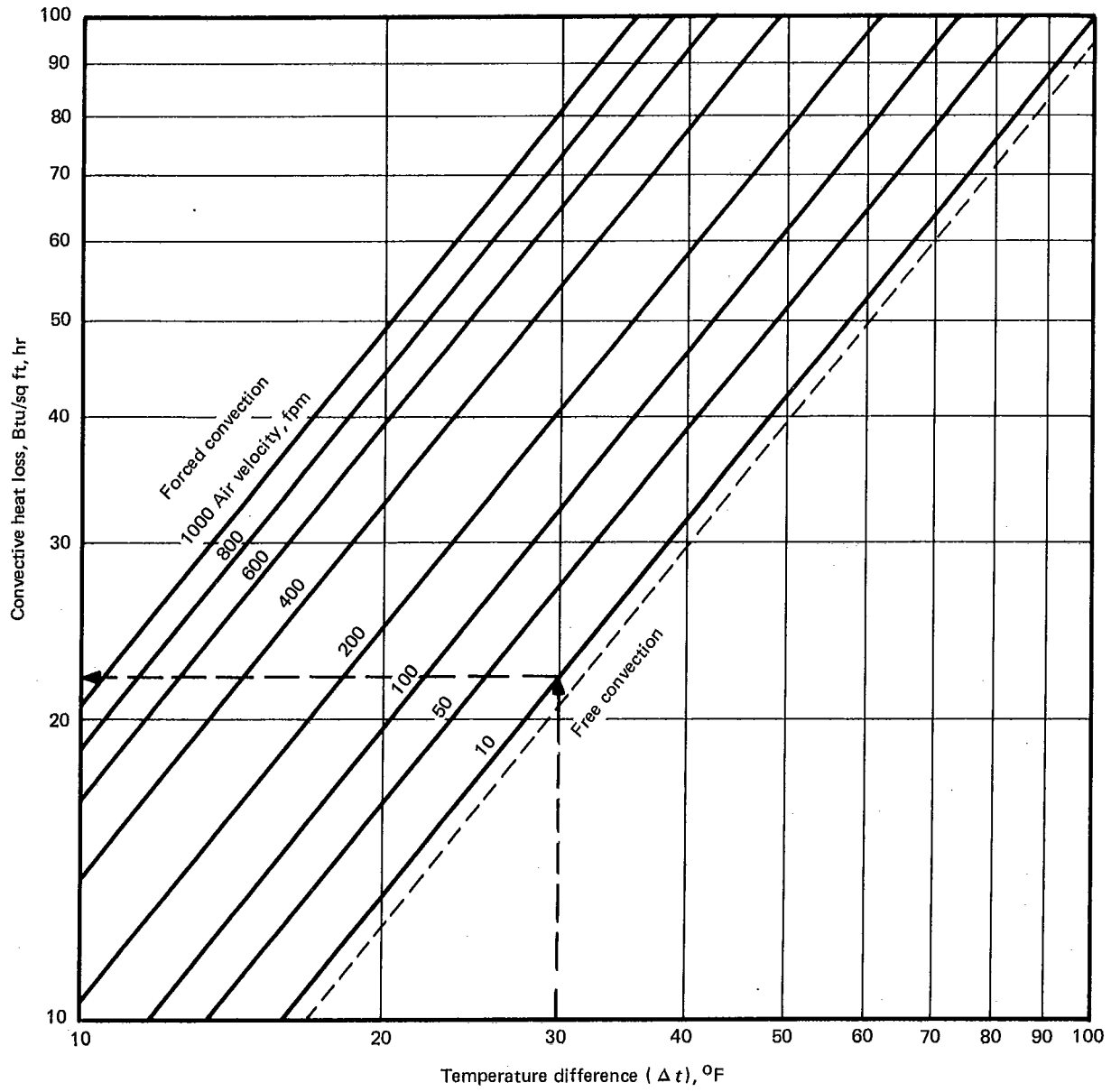

Free Convection

$$Q/A = 0.296\,(\Delta t)^{1.25}$$

where
Q/A = heat loss, Btu/sq ft, hr
Δt = temperature difference between wall and surrounding air °F

Forced Convection

$$Q/A = 0.296\,(\Delta t)^{1.25}\sqrt{\frac{V + 68.9}{68.9}}$$

where
Q/A = heat loss, Btu/sq ft, hr
Δt = temperature difference between wall and surrounding air °F

FIG. 4.2

Source: "Thermal Insulation," John F. Malloy, Van Nostrand Reinhold Co., 1969, pp. 33-35.

Copyright ASME International
Provided by IHS under license with ASME
No reproduction or networking permitted without license from IHS
Not for Resale

TABLE 4.1

Radiation emittance table

Metals	Surface Temp., °F	Total Normal Emittance, ϵ
Aluminum		
Highly polished	440-1070	0.039-0.057
Polished	100-1000	0.04-0.06
Rough plate	78	0.055-0.070
Oxidized @ 1110°F	390-1110	0.11-0.19
Roofing surface		0.216
Oxide	530-1520	0.63-0.26
Foil	212	0.087
Bismuth	175	0.34
Brass		
Highly polished	497-710	0.03-0.04
Polished	100	0.05
Rolled plate, natural	72	0.06
Rolled, coarse emerald	72	0.20
Oxidized @ 1110°F	390-1110	0.61-0.59
Dull plate	120-660	0.22
Chromium	100-1000	0.08-0.26
Polished	100-500	0.06-0.08
Polished	Solar	0.50
Copper		
Electrolytic, polished	176	0.02
Comm'l plate, polished	66	0.030
Heated @ 1110°F	390-1110	0.57-0.57
Thick oxide coating	77	0.78
Cuprous oxide	1470-2010	0.66-0.54
Everdur, dull	200	0.11
Gold		
Highly polished	440-1160	0.02-0.40
Polished	100	0.06
Iron and Steel		
Pure iron, polished	350-1800	0.05-0.37
Wrought iron, polished	100-480	0.28
Cast iron, polished		0.21
Smooth oxidized iron	260-980	0.78-0.82
Strongly oxidized iron	100-480	0.95
Steel, polished	100-1000	0.07-0.14
Steel, polished	Solar	0.045
Steel, rolled sheet	70	0.657
Steel, rough plate	100-700	0.94-0.97
Smooth sheet iron	1650-1900	0.55-0.60
Plate steel, rusted	67	0.69
Steel, oxidized	100-1000	0.79-0.79
Lead		
Pure	260-440	0.06-0.08
Gray, oxidized	75	0.28
Oxidized @ 390°F	390	0.63
Magnesium		
Polished	100-1000	0.07-0.22
Monel metal		
Washed, abrasive soap	75	0.17
Repeated heating	450-1610	0.46-0.65
Nickel and alloys		
Electrolytic, polished	74	0.05
Electroplated, not polished	68	0.11
Wire	368-1844	0.10-0.19
Oxidized @ 1110°F	390-1110	0.37-0.48
Oxide	1200-2290	0.59-0.86
Nickel copper, polished	212	0.06
Nickel silver, polished	212	0.14
Nickelin, gray oxide	70	0.26
Nichrome wire, bright	120-1830	0.65-0.79
Nichrome wire, oxidized	120-930	0.95-0.98
Chrome–nickel		.36-.97
Platinum, polished	440-2960	0.05-0.17
Silver, pure, polished	440-1160	0.02-0.03
Stainless steels		
Type 316, cleaned	75	0.28
316, repeated heating	450-1600	0.57-0.66
304, 42 hr @ 980°F	420-980	0.62-0.73
310, furnace service	420-980	0.90-0.97
Tin, bright	76	0.04-0.06
Tungsten		
Filament	100-1000	0.03-0.08
Filament	2000-5000	0.19-0.34
Zinc		
Pure, polished	440-620	0.05
Galv. iron, bright	82	0.23
Galv. gray oxidized	75	0.28
Galv. iron, dirty	2500	0.90
Galv. iron, dirty	Solar	0.90
Galv. iron	Solar	0.54

Source: "Thermal Insulation," John F. Malloy, Van Nostrand Reinhold Co., 1969, Appendix B, p. 525.

Copyright ASME International
Provided by IHS under license with ASME
No reproduction or networking permitted without license from IHS
Not for Resale

specific humidity does not change with heat addition unless there is moisture addition, the air moisture crossing the envelope, Fig. 1, is the same as that measured at the air inlet.

4.5.4 Surface Radiation and Convection. The radiation and convection loss of an HRSG is generally the smallest of all heat losses. This loss may be assigned by agreement of the parties to the test using the Radiation Loss Curve in PTC 4.1, Figs. 8 and 9. The curve's values were checked against the actual measured losses on several large boilers and the curve values were found to be normally greater than the actual radiation loss. It must further be noted that the radiation loss curve is based on fully fired boilers which have large furnaces, whereas the usual HRSG does not. Because of this difference, the HRSG radiation-convection heat loss area per heat input rate (sq ft of outside area/Btu input rate) will be a smaller value than for a fully fired installation and therefore, PTC 4.1, Fig. 8, will be even more conservative in terms of radiation-convection loss for HRSG units.

Although it may be desirable to treat this loss like all others, i.e., to take test readings and compute the loss, the test installation is quite extensive and may be an unwarranted requisite. In conducting such tests, the following methods are suggested for obtaining test data and computing the loss.

4.5.4.1 Heat Loss Boundary. A boundary or bounding surface must be established through which heat losses occur. It shall include the total flat projected external surface area between the plane at which the heat input to the HRSG is measured and the last plane (outlet plane) at which heat is removed from the gas.

4.5.4.2 Conduction Method. Heat loss through exposed surface can be determined by installing at the center of every 100 sq ft of area a pair of thermocouples in a block of insulation of known conductivity. With the temperature gradient measured by the thermocouples, the known distance between thermocouples and the conductivity of the insulation compute the radiation and convection loss for each 100 sq ft divided by the HRSG heat input rate will be the radiation and convection loss for the unit.

4.5.4.3 Surface and Ambient Air Temperature–Velocity Method

4.5.4.3.1 Lagging surface temperature should be measured with a contact pyrometer. If there is no temperature gradient transverse to the gas flow path, a series of at least ten equally spaced skin (lagging) temperature measurements should be made along each side, parallel to the gas flow at one third of the HRSG's height, from the heat input measurement plane to the outlet plane. When temperature gradients transverse to gas flow exist, then number of temperature measurements should be doubled, i.e., measurement should be taken at one third and two thirds the HRSG's height.

4.5.4.3.2 Ambient air temperature must be measured.

4.5.4.3.3 Surface air velocity should be measured with a commercial grade anemometer of the proper range after a smoke generator or yarn tuft has been used to determine air flow direction across the HRSG exterior.

4.5.4.3.4 Calculations. When it has been determined that the average side-to-side velocities and skin temperatures are within 10 fpm and 10°F of each other, respectively, an overall average of these two quantities should be used to obtain unit area heat losses as determined by graphs, Figs. 4.1 and 4.2, and using appropriate emissivity values as shown on Table 4.1. The sum of the unit area radiation and convection heat losses are multiplied by the total area over which the measurements were taken to determine the total unit heat loss. When either or both of the above conditions do not exist, the heat loss from each side or surface should be determined on an area-weighted basis. Radiation-convection heat loss expressed as a percentage of total heat input becomes:

$$\text{Loss as percentage of input} = \frac{\text{Total heat loss}}{\text{Total heat input}} \times 100\%$$

4.5.5 Gaseous Fuel Sampling. The gas shall be sampled in accordance with the Test Code for Gaseous Fuels, PTC 3.3.

4.5.6 Gaseous Fuel Analysis and Higher Heating Value. Fuel analysis and higher heating value determination shall be made in accordance with the Test Code for Gaseous Fuels, PTC 3.3.

4.5.6.1 The lower heating value is calculated from higher heating value by the following formula: $LHV = HHV - 9384\,H$, where H is the weight fraction of hydrogen in the fuel gas. For explanation of the conversion see Appendix 7.5.

4.5.7 Liquid Fuel Sampling. Representative samples of fuel shall be obtained in accordance with the Test Code for Diesel and Burner Fuels, PTC 3.1.

4.5.8 Liquid Fuel Analysis and Higher Heating Value. Fuel analysis, density, and viscosity determination shall be made in accordance with the Test Code for Diesel and

Copyright ASME International
Provided by IHS under license with ASME
No reproduction or networking permitted without license from IHS
Not for Resale

Burner Fuels, PTC 3.1; Density Determinations, PTC 19.16; and Determination of the Viscosity of Liquids, PTC 19.17. Higher heating value shall be determined in accordance with ASTM D 2382, Heat of Combustion of Hydrocarbon Fuels by Bomb Calorimeter (High Precision Method).

4.5.8.1 **Lower Heating Value.** The higher heating value of liquid fuels is determined in a constant volume. For applications in this Code it is necessary to convert to conditions of constant pressure and lower heating value. The conversion from higher in a constant volume to lower under constant pressure is made according to the following formula:

$$LHV_{(\text{constant pressure})} = HHV_{(\text{constant volume})} - 9120\,H,$$

where H is the weight fraction of hydrogen in the fuel. For explanation of the conversion see Appendix 7.5.

4.6 ALTERNATIVE METHODS OF MEASUREMENT

4.6.1 Discussion

4.6.1.1 Determination of gas turbine exhaust total sensible heat flow or temperature are important parameters for calculating efficiency or effectiveness. Due to the usual geometry of gas turbine exhaust systems and associated duct systems connecting to the HRSG, the foregoing parameters are difficult to measure directly with the required accuracy. There are alternative methods to derive these parameters with the required accuracy: the gas turbine heat balance method and gas turbine inlet scroll method.

4.6.2 Gas Turbine Heat Balance Method

4.6.2.1 The gas turbine heat balance enables determination of the sensible heat in the gas turbine exhaust gas without the requirement for determination of exhaust gas flow and exhaust gas temperature by measurement. The major parameters employed in this method are heat consumption and power output, which can be determined by methods presented in PTC 22 Gas Turbine Power Plants. Secondary parameters, which complete the heat balance, are steam or water injection and the miscellaneous losses which include auxiliaries, radiation, lubricating oil cooling, and turbine cooling. The accuracy of this method requires precise determination of power output and heat consumption. The small magnitude of the miscellaneous losses reduces the influence of this parameter upon accuracy of determination of sensible heat by this method. The following procedures and calculation methods are presented for application with the input-output method (Section 5.1) for determining the efficiency of an HRSG. If agreed upon between the parties, these methods may be applied as the primary method of determining sensible heat, gas enthalpy, or gas flow. Alternatively, these methods may be applied as secondary methods for checking the magnitude of these parameters when using the methods presented in Section 5.1 as the primary method of determining the value of these parameters.

4.6.2.1.1 The gas turbine heat balance method may also be utilized for determination of gas turbine exhaust flow or temperature using the calculation procedure in 4.6.2.1.4 and 4.6.2.1.5.

4.6.2.1.2 **Sensible Heat in Exhaust Gas.** Fuel fired in a gas turbine is converted to shaft power, sensible heat in the exhaust gas, and miscellaneous losses. The sensible heat in the exhaust gas above the reference temperature* is determined as the net heat in the fuel fired plus energy in water or steam injection less the shaft power and the miscellaneous losses. The miscellaneous losses are usually a small fraction of the energy in the fuel fired and they include heat rejection from the lubricating oil system, heat rejection from the turbine cooling system, heat radiated from casings, overboard air or gas leakage, and energy input to accessories driven from the turbine shaft. Heat radiated from casings and energy input to shaft driven accessories shall be determined from the gas turbine manufacturer's information. Heat rejection from the lubrication and turbine cooling shall be determined by the lubricant or turbine cooling fluid enthalpy drop and flow or coolant enthalpy rise and flow. If overboard air or gas leakage flow and temperature can be measured, this heat loss shall be determined from the flow and temperature. Since the total miscellaneous losses are a small fraction of the energy in the fuel fired, the gas turbine manufacturer's curves and information may be employed for determination of miscellaneous losses if agreed upon by the parties to the test. To preserve the accuracy of the test, the miscellaneous losses estimated from manufacturer's curves and information must not exceed two percent of the energy in the fuel fired.

* Reference temperature, t_R, is the base temperature at a given pressure to which sensible heat losses and credits are compared for efficiency calculations. In 4.6.2.1.3 the reference temperature is the compressor inlet temperature.

Copyright ASME International
Provided by IHS under license with ASME
No reproduction or networking permitted without license from IHS
Not for Resale

4.6.2.1.3 The sensible heat in the exhaust gas above the reference temperature is computed by the following equation:

$$Q_{GT1} = W_{fG32} \times h_{fG32} \times \eta_B/100 + W_{fG32} \times c_{pfG32} (t_{f35,37} - t_R) + W_{mJ} (h_{mJ} - h_{mR}) - Q_{p91} + W_{sJ} (h_{sJ} - h_{sR}) - L_{H92} - L_{H96} - 1050\, W_{mJ}$$

where

$Q_{GT1} = \frac{\text{Btu}}{\text{hr}}$ = Sensible heat in exhaust gas above reference temperature.

$W_{fG32} = \frac{\text{lb}}{\text{hr}}$ = Flow of fuel to the gas turbine.

$h_{fG32} = \frac{\text{Btu}}{\text{lb fuel}}$ = Lower heating value of fuel to the gas turbine (see paragraph 5.4.2.3.9).

η_B = percent = Gas turbine burner efficiency.

$c_{pfG32} = \frac{\text{Btu}}{\text{lb °F}}$ = Mean specific heat of gas turbine fuel (see paragraph 5.4.2.3.4).

$t_{f35,37}$ = °F = Fuel temperature to supplementary burners.

t_R = °F = Reference temperature.

$W_{mJ} = \frac{\text{lb}}{\text{hr}}$ = Flow of water injection entering the gas turbine.

$W_{sJ} = \frac{\text{lb}}{\text{hr}}$ = Flow of steam injection entering the gas turbine.

$h_{mJ} = \frac{\text{Btu}}{\text{lb}}$ = Enthalpy of water injection at the temperature entering the gas turbine.

$Q_{p91} = \frac{\text{Btu}}{\text{hr}}$ = Heat equivalent of gas turbine shaft power output (kW x 3412.14 or hp x 2544.43).

$L_{H92} = \frac{\text{Btu}}{\text{hr}}$ = Heat equivalent of input to shaft driven accessories, from gas turbine manufacturer (hp x 2544.43).

$L_{H96} = \frac{\text{Btu}}{\text{hr}}$ = Heat equivalent of loss from lubricating oil system, turbine cooling system, overboard air or gas leakage, and heat radiated from casings, from gas turbine manufacturer or the following equation:

$$L_{H96} = Q_{R96} + W_{a96} (h_{a96} - h_{aR}) + W_{o96} (h_{o96\text{-}1} - h_{o96\text{-}2}) + W_{c96} (h_{c96\text{-}1} - h_{c96\text{-}2})$$

where

$Q_{R96} = \frac{\text{Btu}}{\text{hr}}$ = Heat radiated from turbine and gear casings and accessories.

$W_{a96} = \frac{\text{lb}}{\text{hr}}$ = Overboard air or gas leakage flow from gas turbine.

$h_{a96} = \frac{\text{Btu}}{\text{lb}}$ = Enthalpy of overboard air or gas leakage.

$h_{aR} = \frac{\text{Btu}}{\text{lb}}$ = Enthalpy of overboard air or gas leakage at compressor inlet temperature.

$W_{o96} = \frac{\text{lb}}{\text{hr}}$ = Lubricating oil flow.

$h_{o96\text{-}1} = \frac{\text{Btu}}{\text{lb}}$ = Enthalpy of lubricating oil entering cooler.

$h_{o96\text{-}2} = \frac{\text{Btu}}{\text{lb}}$ = Enthalpy of lubricating oil leaving cooler.

$h_{sJ} = \frac{\text{Btu}}{\text{lb}}$ = Enthalpy of steam injection at the temperature entering the gas turbine.

$h_{mR} = \frac{\text{Btu}}{\text{lb}}$ = Enthalpy of water injection at reference temperature.

$h_{sR} = \frac{\text{Btu}}{\text{lb}}$ = Enthalpy of steam injection at reference temperature.

$W_{c96} = \frac{\text{lb}}{\text{hr}}$ = Turbine cooling fluid flow

$h_{c96\text{-}1} = \frac{\text{Btu}}{\text{lb}}$ = Enthalpy of turbine cooling fluid at point of extraction from turbine.

$h_{c96\text{-}2} = \frac{\text{Btu}}{\text{lb}}$ = Enthalpy of turbine cooling fluid at point of reinjection into turbine after being cooled.

4.6.2.1.4 Exhaust Gas Flow Determination. The exhaust gas flow can be calculated from the sensible heat determined from the gas turbine heat balance if the exhaust gas temperature is determined by measurement, employing equation:

$$W_{GT1} = \frac{Q_{GT1}}{h_{G1} - h_{GR}}$$

Copyright ASME International
Provided by IHS under license with ASME
No reproduction or networking permitted without license from IHS
Not for Resale

where

W_{GT1} = $\frac{lb}{hr}$ = Exhaust flow from the gas turbine.

Q_{GT1} = $\frac{Btu}{hr}$ = Rate of sensible heat in exhaust gas.

h_{G1} = $\frac{Btu}{lb}$ = Enthalpy of exhaust gas at gas turbine outlet temperature (determined by paragraph 5.4.2.4 in conjunction with Table 5.4.1)

h_{GR} = $\frac{Btu}{lb}$ = Enthalpy of exhaust gas at reference temperature (determined by paragraph 5.4.2.4 in conjunction with Table 5.4.1)

4.6.2.1.5 Exhaust Gas Temperature Determination. The absolute enthalpy and the temperature of the gas turbine exhaust gas can be calculated from the gas turbine heat balance of 4.6.2.1.3 if the exhaust gas flow is determined by measurement.

The absolute enthalpy of the exhaust gas may be determined as follows:

$$h_{G1} = \frac{Q_{GT1}}{W_{GT1}} + h_{GR}$$

Gas turbine exhaust temperature is the temperature at which the enthalpy of the exhaust composition has the above value.

4.6.3 Gas Turbine Inlet Scroll Method

4.6.3.1 This method of exhaust flow measurement may be utilized for gas turbines with calibrated inlet scrolls provided there is agreement of the parties to the test.

4.6.3.1.1 The parties to the test shall be mutually satisfied with the calibration procedure and facilities utilized by the gas turbine manufacturer. They must further be satisfied that the gas turbine is in a state of cleanliness which is acceptable for test purposes.

4.6.3.1.2 The exhaust flow is the sum of the inlet flow, fuel flow, and steam and/or water injection flows.

Copyright ASME International
Provided by IHS under license with ASME
No reproduction or networking permitted without license from IHS
Not for Resale

SECTION 5 — COMPUTATION OF RESULTS

5.1 EFFICIENCY BY INPUT-OUTPUT METHOD

5.1.1 Determination of Efficiency by Input-Output Method. HRSG efficiency is defined by this method as the ratio of the heat output to the heat input. The heat output is the heat absorbed by the HRSG working fluids (steam and water). The total heat input is the sum of the individual heat inputs (sensible heat supplied by the exhaust flow from the gas turbine, heat from the combustion of supplementary fuel, and total of heat credits). This method requires accurate measurement of the heat input and output quantities. Data resulting from these measurements are used in the calculation procedure given in Section 5.4.2.

5.1.2 Input Data

5.1.2.1 Accurate determination of the following data is essential.

5.1.2.1.1 Gas turbine exhaust flow and temperature or total heat available from the gas turbine.

5.1.2.1.2 Exhaust gas bypass flow.

5.1.2.1.3 Enthalpy of exhaust gas (including injection steam or water) at HRSG inlet temperature and at reference temperature, as determined by the incremental enthalpy calculation method for combustion products (see paragraph 5.4.2.4 for calculation procedure and data required).

5.1.2.1.4 Gas turbine and supplementary fuel analyses and flow rates.

5.1.2.1.5 Supplementary fuel lower heating value as obtained by laboratory analysis.

5.1.2.1.6 Heat credits for augmenting air, sensible heat of supplementary fuel, externally supplied atomizing steam, HRSG gas recirculation, and auxiliary drives.

5.1.2.1.7 Ambient conditions including temperatures, relative humidity and barometric pressure.

5.1.3 Input Measurement

5.1.3.1 The following paragraphs generally describe the methods of determining the HRSG input. Measurement techniques and instrumentation are discussed in further detail in Section 4.

5.1.3.1.1 **Total Heat Input.** The total heat available at the outlet of the gas turbine may be determined by means of a heat balance around the gas turbine. This method and the measurement methods to be employed are described in Sections 4.6 and 4, respectively.

5.1.3.1.2 **Exhaust Flow and Temperature.** The exhaust flow or temperature may be measured directly by a traverse of the gas turbine exhaust duct (see Appendix 7.2 for discussion), or indirectly by performing a heat balance around the gas turbine. The gas turbine heat balance may be used to obtain the total exhaust heat available at the inlet to the HRSG or may be used to determine exhaust temperature (knowing exhaust flow), or exhaust flow (knowing exhaust temperature). The gas turbine heat balance method may also be used as a check of direct measurement of exhaust temperature and/or flow. The measurement techniques for these methods are discussed in Section 4 and the calculation procedures are discussed in Section 4.6. The exhaust flow may also be determined indirectly by measuring the fuel and the inlet air flow to a gas turbine equipped with a calibrated inlet air scroll. Further information concerning this method is given in Section 4.6.

5.1.3.1.3 **Exhaust Bypass Flow.** The exhaust gas bypass flow shall be directly measured or an allowance made by agreement of the parties to the test.

5.1.3.1.4 **Fuel Inputs.** Measurement methods for fuel input data including flow, analysis, and heating value of liquid and gaseous fuel are given in Section 4.

5.1.3.1.5 **Heat Credits.** Heat credits are sensible heat quantities added to the HRSG envelope, Fig. 1.1. The quantities of each are determined by a flow quantity multiplied by an enthalpy difference, or by the conversion to thermal units of an electrical energy measurement.

5.1.4 Output Data

5.1.4.1 **Data Required.** Accurate determination of data is essential. For an HRSG operating at a single pressure

Copyright ASME International
Provided by IHS under license with ASME
No reproduction or networking permitted without license from IHS
Not for Resale

level with a reheat section and an extraction stage of superheated or saturated steam for auxiliary service the required data includes: flow rate, temperature and pressure of superheater outlet steam, reheat steam, saturated steam, desuperheating water, economizer output bypass, and boiler blowdown. Other data may be required depending on the HRSG configuration, additional pressure levels, auxiliary heating services, etc.

5.1.5 Output Measurement

5.1.5.1 Section 4 generally describes the measurement for determining the HRSG output. The method of measuring output flow is to measure each water flow into the unit as outlined in paragraph 4.2.4. Output data determined by the methods of Section 4 are used in the calculation procedures given in Section 5.4.

5.2 EFFICIENCY BY THERMAL-LOSS METHOD

5.2.1 Determination of Efficiency by Thermal-Loss Method. The thermal loss method defines the steam generator efficiency as 100 percent minus a quotient expressed in percent. The quotient consists of the sum of all accountable losses as the numerator, and heat inputs as the denominator. This method requires accurate determination of the exhaust gas enthalpy at the HRSG inlet and stack, energy from supplementary fuel, heat credits, and heat losses. The influence of exhaust gas flow measurement accuracy on the accuracy of efficiency determined by this method is small because it appears in the largest term in the numerator, stack gas loss, and the largest term in the denominator, sensible heat in the gas turbine exhaust gas, which results in cancellation of its effect on the most significant terms. The calculation procedure is presented in Section 5.4.3.

The operating point at which the HRSG is to be tested should be based on output steam pressure and either water flow measurement or steam flow measurement in accordance with Section 4.

5.2.2 Data Required and Measurement Methods

5.2.2.1 Accurate determination or control of the following data are required.

5.2.2.1.1 Gas turbine exhaust temperature.

5.2.2.1.2 HRSG gas temperature leaving unit.

5.2.2.1.3 Exhaust gas bypass flow rate.

5.2.2.1.4 Enthalpy of gas at HRSG inlet and outlet temperatures, as determined by the incremental enthalpy calculation method for combustion products (see paragraph 5.4.2.4 for calculation procedure and data required).

5.2.2.1.5 Supplementary fuel flow rate and lower heating value.

5.2.2.2 Exhaust Flow and Temperature. The exhaust flow or temperature may be measured directly by a traverse of the gas turbine exhaust duct (see Appendix 7.2 for discussion), or indirectly by performing a heat balance around the gas turbine. The gas turbine heat balance may be used to determine exhaust flow (knowing exhaust temperature). The gas turbine heat balance method may also be used as a check of direct measurements of exhaust temperature and/or flow. The measurement techniques for these methods are discussed in Section 4 and the calculation procedures are discussed in Section 4.6. The exhaust flow may also be determined indirectly by measuring the fuel and the inlet air flow to a gas turbine equipped with a calibrated inlet air scroll. Further information concerning this method is given in Section 4.6.

5.3 PERFORMANCE BY EFFECTIVENESS METHOD

5.3.1 Determination of Performance by Effectiveness Method. This method defines HRSG performance as a ratio of the actual enthalpy drop of gas through the HRSG (or sections of a multi-pressure HRSG) to the maximum theoretically possible (MTP) enthalpy drop of the gas through the corresponding section(s). The ratio is expressed as a percent. This method requires the accurate determination of gas temperature at the inlet to and outlet from the HRSG or sections thereof, the temperature of the water and steam, and the water flow to and steam flow from the steam generator. The calculation procedure is given in Section 5.4.4.

5.3.2 Data Required for Unfired HRSG

5.3.2.1 Accurate determination of the following data is required for each applicable section:

5.3.2.1.1 Gas turbine exhaust temperature and enthalpy. (Calculation procedure for determining enthalpy is given in paragraph 5.4.2.4.)

5.3.2.1.2 HRSG outlet gas temperature and enthalpy.

*5.3.2.1.3 Steam flow and enthalpy at outlet of HRSG.

*5.3.2.1.4 Water flow and enthalpy at HRSG inlet.

5.3.2.1.5 Steam pressure.

*Not required when section water flow equals section steam flow. For discussion see Appendix 7.4.

Copyright ASME International
Provided by IHS under license with ASME
No reproduction or networking permitted without license from IHS
Not for Resale

5.3.3 Data Required for Supplementary Fired HRSG

5.3.3.1 In addition to the data required by Section 5.3.2, accurate determination of the following additional data is required.

5.3.3.1.1 Supplementary fuel flow to the steam generator and lower heating value as obtained by laboratory analysis.

5.3.4 Method of Measurement

5.3.4.1 Gas Turbine Exhaust Temperature. The gas turbine exhaust temperature may be measured directly by a traverse of the gas turbine exhaust duct or calculated by performing a heat balance around the gas turbine. The turbine heat balance method may also be used as a check of direct measurement of exhaust temperature. The measurement techniques for these methods are discussed in Section 4 and the calculation procedure is discussed in Section 4.6.

5.3.4.2 HRSG Gas Temperature. HRSG temperatures which cannot be accurately measured may be determined by ratioing the heat absorbed by the working fluid of the section being tested to the total heat absorbed by the HRSG and that ratio applied to the total temperature drop in the HRSG.

5.3.4.3 Output Measurement. Paragraph 4.2.5 generally describes the measurement for determining the HRSG output. The method of measuring output flow is to measure each water flow into the unit. Output data determined by the methods of Section 4 are used in the calculation procedures given in Section 5.4.

5.4 CALCULATION PROCEDURES

5.4.1 The following calculation procedures are for determining the efficiency of a gas turbine heat recovery steam generating unit by both the Input-Output Method and the Thermal-Loss Method for the actual operating conditions of the tests. Where a comparison is to be made between test efficiency and a standard or guaranteed efficiency, adjustments should be made in computations for deviation of test conditions from the standard or guaranteed conditions for certain heat credits and heat losses. The procedure for such adjustments is as described under "Corrections to Guarantee Conditions," paragraphs 5.4.5 to 5.4.8 inclusive.

EFFICIENCY BY INPUT-OUTPUT METHOD

5.4.2 $$\eta_{SG} = \frac{\text{Output}}{\text{Input}} \times 100\%$$

5.4.2.1 η_{SG} = Percent = Efficiency.

5.4.2.2 Output is defined as the heat absorbed by the working fluid, or

$$\begin{aligned}\text{Output} = {} & W_{s100,101,104}\,(h_{s100,101,104} - h_{w72}) \\ & + W_{w68}\,(h_{s100} - h_{w68}) + W_{s106}\,(h_{s107} - h_{s106}) + W_{w69}\,(h_{s107} - h_{w69}) \\ & + W_{w70}\,(h_{w70} - h_{w72}) + W_{w71}\,(h_{w104} - h_{w72}) + W_{w57}\,(h_{w58} - h_{w57})\end{aligned}$$

Note 1: The preceding equation applies to a steam generator at a single pressure level. Similar terms should be added if the steam generator contains additional steam pressure levels such as intermediate and low pressure boilers and low level economizers.

Note 2: For forced circulation steam generators, the following terms must be added for cooling water, seal or injection water and leak-off flows for each circulating pump.

$$W_{w41}\,(h_{w42} - h_{w41}) + (W_{w43} - W_{w44})\,(h_{w72} - h_{w43}) + W_{w44}\,(h_{w44} - h_{w43})$$

Note 3: Refer to Fig. 1.1 and Table 1.1 for listing of numerical subscripts.

Where

5.4.2.2.1 $W_{s100}, W_{s101}, W_{s106} = \frac{\text{lb steam}}{\text{hr}}$ = Superheater, auxiliary, and reheater steam flow rates.

$W_{s104} = \frac{\text{lb steam}}{\text{hr}}$ = Saturated steam (drum) flow rate.

Copyright ASME International
Provided by IHS under license with ASME
No reproduction or networking permitted without license from IHS
Not for Resale

W_{w70}, W_{w71} = $\frac{\text{lb water}}{\text{hr}}$ = Economizer outlet bypass and boiler blowdown flow rates.

W_{w68}, W_{w69} = $\frac{\text{lb water}}{\text{hr}}$ = Desuperheating water flow rate.

W_{w41}, W_{w43}
W_{w44}, W_{w57} = $\frac{\text{lb water}}{\text{hr}}$ = Coolant flow rate to circulating pump, injection flow rate to circulating pump, leak-off flow rate from circulating pump, and miscellaneous coolant flow rate.

5.4.2.2.2 h_{s100}, h_{s101}, h_{s106}, h_{s107} = $\frac{\text{Btu}}{\text{lb steam}}$ = Enthalpies of superheater, auxiliary, and reheater steam.

h_{s104} = $\frac{\text{Btu}}{\text{lb steam}}$ = Enthalpy of saturated steam at drum pressure.

h_{w68}, h_{w69} = $\frac{\text{Btu}}{\text{lb water}}$ = Enthalpies of desuperheating water.

h_{w70}, h_{w72} = $\frac{\text{Btu}}{\text{lb water}}$ = Enthalpies of water at economizer outlet and inlet.

$h_{w104}, h_{w41}, h_{w42}$, $h_{w43}, h_{w44}, h_{w57}$, h_{w58} = $\frac{\text{Btu}}{\text{lb water}}$ = Enthalpies of saturated water at drum pressure, coolant into and from circulating pump, injection water to and leak-off from circulating pump, and miscellaneous coolant into and from envelope.

Note: Enthalpies of steam and water are to be taken from the ASME Steam Tables, 1967 Edition.

5.4.2.3 Input is defined as the sensible heat in the exhaust gas supplied to the heat recovery steam generator plus the chemical heat in the supplemental fuel, if applicable, plus the heat credits added to the working fluid, air, gas and other fluid circuits which cross the envelope boundary. Refer to Fig. 1.1.

$$\text{Input} = B_{GT6} + B + (W_{f35,37} \times h_{f35,37})$$

5.4.2.3.1 $B_{GT6} = \frac{\text{Btu}}{\text{hr}}$ = Sensible heat supplied by the external exhaust gas source above the reference temperature, t_R.

$$= (W_{GT1} - W_{BP2} + W_{f35,37} + W_{mF33} + W_{z36})\,(h_{G6} - h_{RG})$$

Where

$W_{GT1} = \frac{\text{lb}}{\text{hr}}$ = Exhaust gas flow rate at gas turbine outlet.

Note: See Section 4.6 for a method of determining gas turbine exhaust flow.

$W_{BP2} = \frac{\text{lb}}{\text{hr}}$ = Exhaust gas bypass flow rate.

$W_{f35,37} = \frac{\text{lb}}{\text{hr}}$ = Supplementary fuel flow rate.

$W_{mF33} = \frac{\text{lb}}{\text{hr}}$ = Augmenting air flow rate.

$W_{z36} = \frac{\text{lb}}{\text{hr}}$ = Atomizing steam flow rate.

$h_{G6} = \frac{\text{Btu}}{\text{lb}}$ = Enthalpy of entering exhaust gas at inlet temperature t_{G6}.

Copyright ASME International
Provided by IHS under license with ASME
No reproduction or networking permitted without license from IHS
Not for Resale

Note: See paragraph 5.4.2.4 for the method of calculating exhaust gas enthalpies based upon the incremental enthalpy of combustion products.

h_{RG} = $\frac{\text{Btu}}{\text{lb}}$ = Enthalpy of exhaust gas at reference temperature t_R (determined by paragraph 5.4.2.4 in conjunction with Table 5.4.1).

Where

t_R = °F = Reference temperature. This is the base temperature at a given pressure to which sensible heat losses and credits are compared for efficiency calculations.

5.4.2.3.2 B = $\frac{\text{Btu}}{\text{hr}}$ = Total of heat credits determined from the summation of the amounts of heat added to the envelope of the steam generator other than the chemical heat in supplementary fired fuel.

$$B = B_{mA33} + B_{f35,37} + B_{z36} + B_{GR22} + B_X$$

5.4.2.3.3 B_{mA33} = $\frac{\text{Btu}}{\text{hr}}$ = Heat credit supplied by moist augmenting air for supplementary firing.

$$= W_{mA33}\,(h_{mA33} - h_{RmA})$$

Where

W_{mA33} = $\frac{\text{lb}}{\text{hr}}$ = Augmenting air flow rate.

h_{mA33} = $\frac{\text{Btu}}{\text{lb}}$ = Enthalpy of moist air at inlet temperature t_{mA33} (determined by paragraph 5.4.2.4 in conjunction with Table 5.4.1).

h_{RmA} = $\frac{\text{Btu}}{\text{lb}}$ = Enthalpy of moist air at reference temperature t_R (determined by paragraph 5.4.2.4 in conjunction with Table 5.4.1).

5.4.2.3.4 $B_{f35,37}$ = $\frac{\text{Btu}}{\text{lb}}$ = Heat credit supplied by sensible heat in supplementary fuel.

$$= W_{f35,37} \times c_{pf}\,(t_{f35,37} - t_R)$$

Where

$W_{f35,37}$ = $\frac{\text{lb}}{\text{hr}}$ = Supplementary fuel flow rate.

c_{pf} = $\frac{\text{Btu}}{\text{lb °F}}$ = Mean specific heat of fuel. See Fig. 4 for fuel oil, Fig. 5 for gas as published in PTC 4.1. It is determined from the instantaneous values over the range between fuel inlet temperature and the reference temperature. (Refer to PTC 3.3, Gaseous Fuels, for alternate method of determining enthalpy of gaseous fuels.)

If liquid fuel is heated by a source external to the unit being tested, the inlet temperature shall be measured downstream of this heater. If oil is heated directly from the unit being tested, temperature shall be measured upstream of the heater.

$t_{f35,37}$ = °F = Supplementary fuel inlet temperature.

t_R = °F = Reference temperature.

5.4.2.3.5 B_{z36} = $\frac{\text{Btu}}{\text{hr}}$ = Heat credit supplied by atomizing steam for supplementary firing when source is external to the unit being tested.

Copyright ASME International
Provided by IHS under license with ASME
No reproduction or networking permitted without license from IHS
Not for Resale

$= W_{z36}\,(h_{z36} - h_{zR})$

Where

$W_{z36} = \frac{\text{lb}}{\text{hr}}$ = Atomizing steam flow rate.

$h_{z36} = \frac{\text{Btu}}{\text{lb}}$ = Enthalpy of atomizing steam at temperature, t_{z36}.

$h_{zR} = \frac{\text{Btu}}{\text{lb}}$ = Enthalpy of atomizing steam at reference temperature, t_R.

5.4.2.3.6 $B_{GR22} = \frac{\text{Btu}}{\text{hr}}$ = Heat credit supplied by gas recirculation.

$= W_{GR22}\,(h_{G22} - h_{RG})$

Where

$W_{GR22} = \frac{\text{lb}}{\text{hr}}$ = Recirculated gas flow rate.

$h_{G22} = \frac{\text{Btu}}{\text{lb}}$ = Enthalpy of exhaust gas at recirculation temperature, t_{G22} (determined by paragraph 5.4.2.4 in conjunction with Table 5.4.1).

$h_{RG} = \frac{\text{Btu}}{\text{lb}}$ = Enthalpy of exhaust gas at reference temperature, t_R (determined by paragraph 5.4.2.4 in conjunction with Table 5.4.1).

5.4.2.3.7 $B_X = \frac{\text{Btu}}{\text{hr}}$ = Heat credit supplied by auxiliary drives within the envelope.

$= W_{sx}\,(h_{sx} - h_{ix})\,\eta_X/100\%$

Where

$W_{sx} = \frac{\text{lb}}{\text{hr}}$ = Steam flow rate.

$h_{sx} = \frac{\text{Btu}}{\text{lb}}$ = Enthalpy of the steam supplied to drive the auxiliaries.

$h_{ix} = \frac{\text{Btu}}{\text{lb}}$ = Enthalpy at the exhaust pressure and initial entropy of steam supplied to drive the auxiliaries.

η_X = Percent = Overall drive efficiency; includes turbine and gear efficiency.

For electric auxiliaries, the heat supplied is as follows:

$B_X = 3412.14\,(\text{kWh})\,\eta_X/100\%$

η_X = Percent = Overall drive efficiency; includes such items as motor efficiency, electric and hydraulic coupling efficiency and gear efficiency.

5.4.2.3.8 $W_{f35,37} = \frac{\text{lb}}{\text{hr}}$ = Supplementary fuel flow rate.

If solid or liquid fuels are used, the flow rate is determined by direct measurement.

If gaseous fuel is used, the measured volumetric flow rate must be converted to a weight basis as follows:

Copyright ASME International
Provided by IHS under license with ASME
No reproduction or networking permitted without license from IHS
Not for Resale

$$W_{f35} = V_{f35} \times \gamma_f$$

Where

V_{f35} = $\frac{ft^3}{hr}$ = Volumetric flow rate of gaseous fuel fired.

γ_f = $\frac{lb}{ft^3}$ = Fuel gas specific weight at the primary measuring element and fuel inlet temperature.

5.4.2.3.9 $h_{f35,37}$ = $\frac{Btu}{lb\ fuel}$ = Lower heating value of supplementary fuel as obtained by laboratory analysis and adjusted to an "as fired" basis from laboratory determination of moisture in the fuel.

Note: Additional heat credits may be added if necessary for special or unusual test conditions. These could include such factors as sensible heat in the flue dust and unburned carbon, hydrogen, hydrocarbons and carbon monoxide in the exhaust gas entering the steam generator.

5.4.2.4 Incremental enthalpy method for determining the enthalpy of combustion products, dry air and moist air.

$$w_{dA} = 1.0$$
$$w_{fG} = (w_{dA} + w_{mA}) \times F_{GA}$$
$$w_f = (w_{dA} + w_{mA} + w_{mJe} + w_{fG}) \times F_{SG}$$
$$w_T = w_{dA} + w_{mA} + w_{mJe} + w_{fG} + w_f$$
$$w_A = w_{dA}/w_T$$
$$w_m = (w_{mA} + w_{mJe})/w_T$$
$$w_F = (w_{fG} + w_f)/w_T$$

$$w_C = w_F \times P_C/100\%$$
$$w_D = w_F \times P_D/100\%$$
$$w_H = w_F \times P_H/100\%$$
$$w_M = w_F \times P_M/100\%$$
$$w_N = w_F \times P_N/100\%$$
$$w_O = w_F \times P_O/100\%$$
$$w_S = w_F \times P_S/100\%$$
$$w_U = w_F \times P_U/100\%$$

$$h_A = w_A \times h_{IA}$$
$$h_C = w_C \times h_{IC}$$
$$h_D = w_D \times h_{ID}$$
$$h_H = w_H \times h_{IH}$$
$$h_m = w_m \times h_{Im}$$
$$h_M = w_M \times h_{IM}$$
$$h_N = w_N \times h_{IN}$$
$$h_O = w_O \times h_{IO}$$
$$h_S = w_S \times h_{IS}$$
$$h_U = w_U \times h_{IU}$$

$$h_G = h_A + h_C + h_D + h_H + h_m + h_M + h_N + h_O + h_S + h_U$$

Where

w_A = $\frac{lb}{lb\ exhaust\ gas}$ = Weight ratio of dry air component.

w_C = $\frac{lb}{lb\ exhaust\ gas}$ = Weight ratio of carbon in fuel components.

Copyright ASME International
Provided by IHS under license with ASME
No reproduction or networking permitted without license from IHS
Not for Resale

$w_D = \frac{\text{lb}}{\text{lb exhaust gas}}$ = Weight ratio of carbon dioxide in fuel components.

$w_{dA} = \frac{\text{lb}}{\text{lb dry air}}$ = Weight ratio of dry air (base = 1.0 lb) = 1.0.

$w_F = \frac{\text{lb}}{\text{lb exhaust gas}}$ = Weight ratio of total fuel.

$w_f = \frac{\text{lb}}{\text{lb dry air}}$ = Weight ratio of supplementary fuel component.

$w_{fG} = \frac{\text{lb}}{\text{lb dry air}}$ = Weight ratio of gas turbine fuel.

$w_H = \frac{\text{lb}}{\text{lb exhaust gas}}$ = Weight ratio of hydrogen in fuel components.

$w_M = \frac{\text{lb}}{\text{lb exhaust gas}}$ = Weight ratio of carbon monoxide in fuel components.

$w_m = \frac{\text{lb}}{\text{lb exhaust gas}}$ = Weight ratio of moisture in fuel components.

$w_{mA} = \frac{\text{lb}}{\text{lb dry air}}$ = Weight ratio of moisture in ambient air as determined from a psychrometric chart for the test conditions of ambient dry bulb temperature and relative humidity. Excluded is moisture addition from evaporative coolers, if utilized.

$w_{mfe} = \frac{\text{lb}}{\text{lb dry air}}$ = Weight ratio of steam or water injection, atomizing steam and moisture from evaporative coolers, if utilized, for supplemental burner(s).

$w_N = \frac{\text{lb}}{\text{lb exhaust gas}}$ = Weight ratio of nitrogen in fuel components.

$w_O = \frac{\text{lb}}{\text{lb exhaust gas}}$ = Weight ratio of oxygen in fuel components.

$w_S = \frac{\text{lb}}{\text{lb exhaust gas}}$ = Weight ratio of sulfur in fuel components.

$w_T = \frac{\text{lb exhaust gas}}{\text{lb dry air}}$ = Total weight ratio of exhaust gas mixture (including supplementary firing).

$w_U = \frac{\text{lb}}{\text{lb exhaust gas}}$ = Weight ratio of sulfur dioxide in fuel components.

$F_{GA} = \frac{\text{lb fuel}}{\text{lb moist air}}$ = Gas turbine fuel-to-inlet air ratio (air entering evaporative coolers, if utilized).

$F_{SG} = \frac{\text{lb fuel}}{\text{lb exhaust gas}}$ = Supplementary firing fuel-to-exhaust gas (gas turbine outlet) ratio.

P_C = Percent = Weight ratio of carbon in fuel.
P_D = Percent = Weight ratio of carbon dioxide in fuel.
P_H = Percent = Weight ratio of hydrogen in fuel.
P_M = Percent = Weight ratio of carbon monoxide in fuel.
P_N = Percent = Weight ratio of nitrogen in fuel.
P_O = Percent = Weight ratio of oxygen in fuel.
P_S = Percent = Weight ratio of sulfur in fuel.
P_U = Percent = Weight ratio of sulfur dioxide in fuel.

Copyright ASME International
Provided by IHS under license with ASME
No reproduction or networking permitted without license from IHS
Not for Resale

h_A = $\frac{\text{Btu}}{\text{lb exhaust gas}}$ = Enthalpy of dry air component.

h_C = $\frac{\text{Btu}}{\text{lb exhaust gas}}$ = Enthalpy of carbon component.

h_D = $\frac{\text{Btu}}{\text{lb exhaust gas}}$ = Enthalpy of carbon dioxide component.

h_G = $\frac{\text{Btu}}{\text{lb exhaust gas}}$ = Summation of components for turbine total exhaust gas enthalpy.

h_H = $\frac{\text{Btu}}{\text{lb exhaust gas}}$ = Enthalpy of hydrogen component.

h_m = $\frac{\text{Btu}}{\text{lb exhaust gas}}$ = Enthalpy of moisture component.

h_M = $\frac{\text{Btu}}{\text{lb exhaust gas}}$ = Enthalpy of carbon monoxide component.

h_N = $\frac{\text{Btu}}{\text{lb exhaust gas}}$ = Enthalpy of nitrogen component.

h_O = $\frac{\text{Btu}}{\text{lb exhaust gas}}$ = Enthalpy of oxygen component.

h_S = $\frac{\text{Btu}}{\text{lb exhaust gas}}$ = Enthalpy of sulfur component.

h_U = $\frac{\text{Btu}}{\text{lb exhaust gas}}$ = Enthalpy of sulfur dioxide component.

h_{IA} = $\frac{\text{Btu}}{\text{lb}}$ = Ideal gas enthalpy of dry air from Table 5.4.1.

h_{IC} = $\frac{\text{Btu}}{\text{lb}}$ = Incremental enthalpy of carbon from Table 5.4.1.

h_{ID} = $\frac{\text{Btu}}{\text{lb}}$ = Ideal gas enthalpy of carbon dioxide from Table 5.4.1.

h_{IH} = $\frac{\text{Btu}}{\text{lb}}$ = Incremental enthalpy of hydrogen from Table 5.4.1.

h_{IM} = $\frac{\text{Btu}}{\text{lb}}$ = Ideal gas enthalpy of carbon monoxide from Table 5.4.1.

h_{Im} = $\frac{\text{Btu}}{\text{lb}}$ = Ideal gas enthalpy of moisture from Table 5.4.1.

h_{IN} = $\frac{\text{Btu}}{\text{lb}}$ = Ideal gas enthalpy of nitrogen from Table 5.4.1.

h_{IO} = $\frac{\text{Btu}}{\text{lb}}$ = Ideal gas enthalpy of oxygen from Table 5.4.1.

h_{IS} = $\frac{\text{Btu}}{\text{lb}}$ = Incremental enthalpy of sulfur from Table 5.4.1.

h_{IU} = $\frac{\text{Btu}}{\text{lb}}$ = Ideal gas enthalpy of sulfur dioxide from Table 5.4.1.

A computer program to determine gas turbine exhaust gas enthalpy is described in the Appendix.

Note: For cases when different fuels are utilized for gas turbine and supplementary firing, the incremental enthalpies for both fuels must be determined and applied.

If other components are present in the fuel, the incremental enthalpies for these components must be determined and applied.

Copyright ASME International
Provided by IHS under license with ASME
No reproduction or networking permitted without license from IHS
Not for Resale

EFFICIENCY BY THERMAL-LOSS METHOD

5.4.3 $$\eta_{SG} = \left[1 - \frac{L}{B_{GT6} + B + (W_{f35,37} \times h_{f35,37})}\right] \times 100\%$$

Derivation of equation is as follows:

$$\eta_{SG} = \frac{\text{Output}}{\text{Input}} \times 100\%$$

Where

η_{SG} = Percent = efficiency.

Output = Input – Losses (L)

Input = $B_{GT6} + B + (W_{f35,37} \times h_{f35,37})$

Thus,

$$\eta_{SG} = \frac{(\text{Input} - L)}{\text{Input}} \times 100\%$$

$$= \left[1 - \frac{L}{B_{GT6} + B + (W_{f35,37} \times h_{f35,37})}\right] \times 100\%$$

5.4.3.1 $L = \frac{\text{Btu}}{\text{hr}}$ = Total heat losses from the steam generator.

$$= L_{G19} + L_{\beta} + L_{w41,43} + L_{w57,58}$$

5.4.3.1.1 $L_{G19} = \frac{\text{Btu}}{\text{hr}}$ = Heat loss in moist exhaust gas

$$L_{G19} = (W_{GT1} + W_{f35,37} + W_{mF33} + W_{z36} - W_{BP2})(h_{G19} - h_{RG})$$

Where

$W_{GT1} = \frac{\text{lb}}{\text{hr}}$ = Rate of gas turbine exhaust gas flow.

Note: See Section 4.6 for a method of determining gas turbine exhaust flow rate.

$W_{f35,37} = \frac{\text{lb}}{\text{hr}}$ = Supplementary fuel flow rate.

$W_{mF33} = \frac{\text{lb}}{\text{hr}}$ = Augmenting air flow rate.

$W_{z36} = \frac{\text{lb}}{\text{hr}}$ = Atomizing steam flow rate.

$W_{BP2} = \frac{\text{lb}}{\text{hr}}$ = HRSG gas bypass flow rate.

$h_{G19} = \frac{\text{Btu}}{\text{lb}}$ = Enthalpy of HRSG gas at stack temperature, t_{G19}.

Note: See paragraph 5.4.2.4 for the method of calculating enthalpy based on the incremental enthalpy of combustion products.

$h_{RG} = \frac{\text{Btu}}{\text{lb}}$ = Enthalpy of exhaust gas at reference temperature, t_R (determined by paragraph 5.4.2.4 in conjunction with Table 5.4.1).

Copyright ASME International
Provided by IHS under license with ASME
No reproduction or networking permitted without license from IHS
Not for Resale

5.4.3.1.2 L_β = $\frac{\text{Btu}}{\text{hr}}$ = Heat loss due to surface radiation and convection.

$= S_B (L_R + L_c)$

Where

S_B = ft^2 = Area of surface through which heat loss occurs.

L_R = $\frac{\text{Btu}}{\text{ft}^2\text{-hr}}$ = Radiant heat loss as determined from Fig. 4.1 and Table 4.1 as function of ambient temperature, surface temperature and surface emissivity.

L_c = $\frac{\text{Btu}}{\text{ft}^2\text{-hr}}$ = Convective heat loss as determined from Fig. 4.2 as a function of temperature difference and air velocity.

5.4.3.1.3 $L_{w41,43}$ = $\frac{\text{Btu}}{\text{hr}}$ = Heat loss in the circulating pump cooling water and seal water leaving the envelope.

$= W_{w41} (h_{w42} - h_{w41}) + W_{w44} (h_{w44} - h_{w43})$

where

W_{w41} = $\frac{\text{lb}}{\text{hr}}$ = Cooling water flow rate.

W_{w44} = $\frac{\text{lb}}{\text{hr}}$ = Seal water leak-off flow rate.

$h_{w41 \text{ to } 44}$ = $\frac{\text{Btu}}{\text{lb}}$ = Enthalpies of water at the corresponding temperatures $t_{w41 \text{ to } 44}$.

5.4.3.1.4 $L_{w57,58}$ = Btu/hr = Heat loss in miscellaneous coolant.

$= W_{w57} (h_{w58} - h_{w57})$

Where

W_{w57} = $\frac{\text{lb}}{\text{hr}}$ = Cooling water flow rate.

$h_{w57,58}$ = $\frac{\text{Btu}}{\text{lb}}$ = Enthalpies of water corresponding to temperatures, t_{w57} and t_{w58}.

Note 1: The preceding equation applies to a single pressure level steam generator. Similar terms should be added if the steam generator contains additional pressure levels and circulating pumps.

Note 2: Additional heat losses may be added if necessary for special or unusual test conditions. These could include, but are not limited to, sensible heat in the flue dust and unburned carbon, hydrogen, hydrocarbons and carbon monoxide in the exhaust gas leaving the steam generator.

5.4.3.2 B_{GT6} = $\frac{\text{Btu}}{\text{hr}}$ = Sensible heat supplied by the exhaust gas source (see paragraph 5.4.2.3.1).

5.4.3.2.1 B = $\frac{\text{Btu}}{\text{hr}}$ = Total heat credits from the summation of heat added to the envelope other than the chemical heat in supplementary fired fuel.

$= B_{mA\,33} + B_{f35,37} + B_{z36} + B_{GR\,22} + B_X$

(Refer to paragraphs 5.4.2.3.2 to 5.4.2.3.7 for derivation of these terms.)

5.4.3.2.2 $W_{f35,37}$ = $\frac{\text{lb}}{\text{hr}}$ = Supplementary fuel flow rate. (See paragraph 5.4.2.3.8.)

5.4.3.2.3 $h_{f35,37}$ = $\frac{\text{Btu}}{\text{lb}}$ = Lower heating value of supplementary fuel. (See paragraph 5.4.2.3.9.)

Copyright ASME International
Provided by IHS under license with ASME
No reproduction or networking permitted without license from IHS
Not for Resale

Note: Additional heat credits may be added if necessary for special or unusual test conditions. These could include but are not limited to such factors as sensible heat in the flue dust and unburned carbon, hydrogen, hydrocarbons and carbon monoxide in the exhaust gas entering the steam generator.

EFFECTIVENESS METHOD

5.4.4 Effectiveness may be used to evaluate complete boilers or sections of boilers. For example, the effectiveness of different pressure levels of multiple pressure boilers may be evaluated separately.

Cases need to be considered when the temperature pinch occurs where gas leaves the evaporator (evaporator pinch) and where the gas leaves the economizer (economizer pinch).

Unfired HRSG will generally have an evaporator pinch and boilers fired to more than 30 percent of the heat input will generally have an economizer pinch. When the pinch location is in doubt effectiveness should be calculated for both evaporator and economizer pinches. The correct expression will yield the higher effectiveness value.

$$EF = \frac{\text{Actual enthalpy change of the exhaust gas}}{\text{MTP enthalpy change of the exhaust gas}} \times 100\%$$

Where

EF = Effectiveness, percent.

MTP = Maximum theoretically possible.

5.4.4.1 HRSG Temperature Profile – Evaporator Pinch

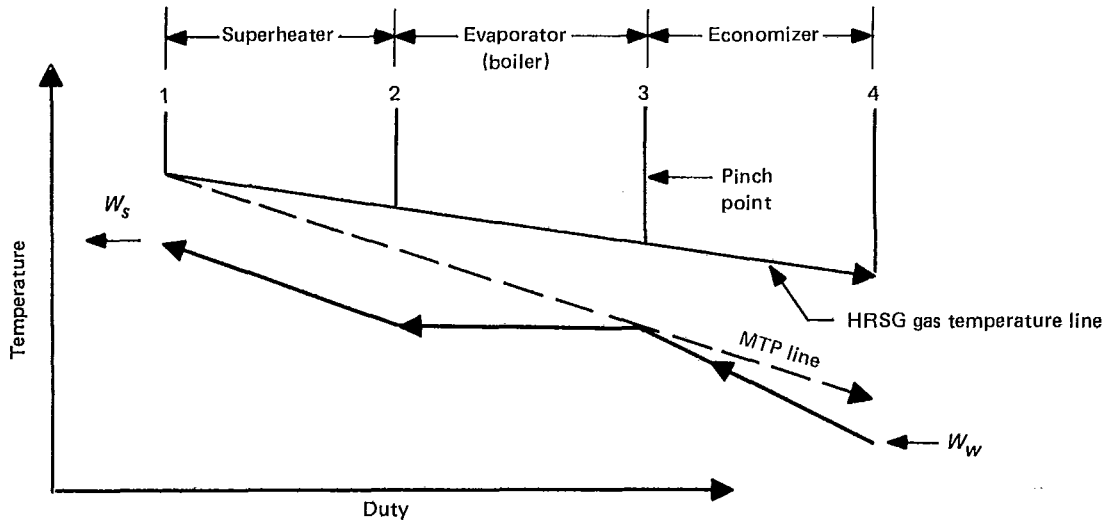

Copyright ASME International
Provided by IHS under license with ASME
No reproduction or networking permitted without license from IHS
Not for Resale

5.4.4.2 **HRSG Temperature Profile – Economizer Pinch**

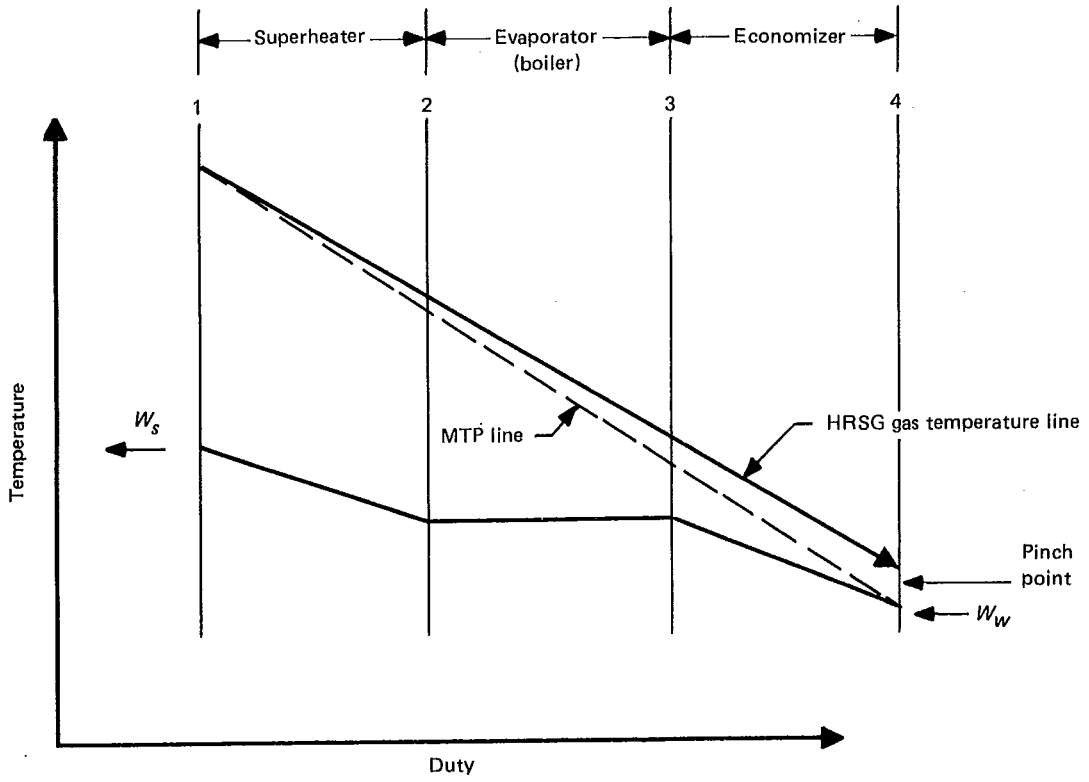

5.4.4.3 **Effectiveness Expression – Evaporator Pinch**

5.4.4.3.1 $$EF = \frac{(h_{G1} - h_{G4}) \times W_{s1} (h_{s1} - h_{w2})}{(h_{G1} - h_{Gs3}) \times [W_{s1} (h_{s1} - h_{w2}) + W_{w3} (h_{w2} - h_{w4})]} \times 100\%$$

Where possible a test for effectiveness should be performed with $W_{s1} = W_{w3}$ when the expression simplifies to:

5.4.4.3.2 $$EF = \frac{(h_{G1} - h_{G4}) (h_{s1} - h_{w2})}{(h_{G1} - h_{Gs3}) (h_{s1} - h_{w4})} \times 100\%$$

5.4.4.4 Effectiveness Expression – Economizer Pinch

5.4.4.4.1 $$EF = \frac{(h_{G1} - h_{G4})}{(h_{G1} - h_{Gw4})} \times 100\%$$

5.4.4.5 **Definitions of Terms for 5.4.4.3 and 5.4.4.4**

$W_{s1} = \frac{\text{lb}}{\text{hr}}$ = Steam flow rate.

$W_{w3} = \frac{\text{lb}}{\text{hr}}$ = Water flow rate.

$h_{G1} = \frac{\text{Btu}}{\text{lb}}$ = Enthalpy of HRSG gas at inlet temperature, t_{G1} (determined by paragraph 5.4.2.4 and Table 5.4.1).

$h_{G4} = \frac{\text{Btu}}{\text{lb}}$ = Enthalpy of HRSG gas at outlet temperature, t_{G4} (determined by paragraph 5.4.2.4 and Table 5.4.1).

Copyright ASME International
Provided by IHS under license with ASME
No reproduction or networking permitted without license from IHS
Not for Resale

h_{Gs3} = $\frac{\text{Btu}}{\text{lb}}$ = Enthalpy of HRSG gas at a temperature equal to the saturated steam temperature, t_{s2} in the boiler drum (determined by paragraph 5.4.2.4 and Table 5.4.1).

h_{Gw4} = $\frac{\text{Btu}}{\text{lb}}$ = Enthalpy of HRSG gas at temperature of the water entering the economizer, t_{w4}.

h_{s1} = $\frac{\text{Btu}}{\text{lb}}$ = Enthalpy of superheated steam at outlet temperature, t_{s1}.

h_{w2} = $\frac{\text{Btu}}{\text{lb}}$ = Enthalpy of water at saturated steam temperature, t_{s2}.

h_{w4} = $\frac{\text{Btu}}{\text{lb}}$ = Enthalpy of water at inlet temperature, t_{w4}.

5.4.5 Gas turbine performance and exhaust conditions vary significantly with changes in ambient conditions. Variations resulting from small manufacturing differences between substantially identical turbines is also possible. Consequently, testing an HRSG at the exact turbine exhaust conditions upon which the boiler guarantees were developed may not be possible.

5.4.6 Correction to guarantee conditions shall be made using performance data or curves prepared and furnished by the HRSG manufacturer prior to any test. Correction curves or data shall define the variation of all parameters pertinent to the test as a function of gas turbine exhaust mass flow, temperature and exhaust gas enthalpy (or percent moisture content). Parameters pertinent to the test would include steam flows, enthalpies, stack temperature, boiler efficiency, etc.

5.4.7 A step-by-step method of correcting test data shall be prepared by the HRSG manufacturer. The user shall review this procedure and any questions shall be resolved prior to the start of the tests.

Copyright ASME International
Provided by IHS under license with ASME
No reproduction or networking permitted without license from IHS
Not for Resale

Copyright ASME International
Provided by IHS under license with ASME
No reproduction or networking permitted without license from IHS

TABLE 5.4.1

Enthalpy of Exhaust Gas Components (1)

BTU/Lb — Above Zero Degrees Rankine

Gas Temp., °F	Carbon	Hydrogen	Sulfur	Dry Air	Water Vapor	Oxygen	Nitrogen	Carbon Dioxide	Carbon Monoxide	Sulfur Dioxide
-60.	1.32	893.97	14.47	95.51	177.72	87.48	100.23	63.97	100.45	50.94
-40.	4.72	936.12	16.05	100.29	186.09	91.59	104.95	67.88	105.12	53.78
-20.	8.15	978.58	17.66	105.07	194.52	95.73	109.69	71.83	109.84	56.66
0.	11.61	1021.32	19.29	109.85	203.01	99.91	114.46	75.81	114.57	59.56
20.	15.13	1064.33	20.94	114.63	211.56	104.12	119.25	79.84	119.34	62.49
40.	18.70	1107.59	22.62	119.41	220.17	108.36	124.06	83.89	124.13	65.45
60.	22.33	1151.08	24.32	124.19	228.83	112.63	128.89	87.99	128.94	68.43
80.	26.03	1194.80	26.05	128.98	237.54	116.93	133.74	92.12	133.78	71.44
100.	29.80	1238.75	27.80	133.77	246.29	121.25	138.60	96.30	138.64	74.48
120.	33.64	1282.90	29.58	138.56	255.10	125.60	143.48	100.51	143.51	77.54
140.	37.56	1327.27	31.39	143.36	263.94	129.97	148.37	104.75	148.40	80.63
160.	41.56	1371.83	33.23	148.17	272.83	134.37	153.28	109.04	153.32	83.75
180.	45.63	1416.60	35.09	152.98	281.77	138.79	158.20	113.36	158.24	86.89
200.	49.78	1461.56	36.98	157.79	290.74	143.23	163.13	117.73	163.19	90.05
220.	54.02	1506.71	38.90	162.61	299.75	147.69	168.08	122.12	168.15	93.24
240.	58.34	1552.04	40.85	167.44	308.80	152.17	173.04	126.56	173.13	96.45
260.	62.74	1597.57	42.83	172.28	317.89	156.67	178.01	131.03	178.12	99.69
280.	67.22	1643.28	44.83	177.12	327.02	161.18	183.00	135.54	183.13	102.95
300.	71.79	1689.18	46.87	181.97	336.19	165.72	188.00	140.09	188.15	106.24
320.	76.44	1735.25	48.93	186.83	345.39	170.28	193.00	144.67	193.19	109.54
340.	81.17	1781.51	51.01	191.70	354.63	174.85	198.03	149.29	198.24	112.87
360.	85.98	1827.96	53.13	196.58	363.90	179.44	203.06	153.94	203.30	116.22
380.	90.88	1874.58	55.27	201.46	373.21	184.05	208.10	158.63	208.38	119.60
400.	95.86	1921.38	57.44	206.36	382.56	188.68	213.15	163.35	213.47	122.99
420.	100.93	1968.36	59.63	211.26	391.94	193.32	218.22	168.11	218.57	126.41
440.	106.07	2015.52	61.85	216.18	401.35	197.98	223.30	172.90	223.69	129.85
460.	111.30	2062.87	64.09	221.11	410.80	202.66	228.38	177.73	228.82	133.31
480.	116.60	2110.39	66.36	226.04	420.29	207.35	233.48	182.58	233.96	136.79
500.	121.99	2158.10	68.66	230.99	429.81	212.06	238.59	187.48	239.11	140.29
520.	127.45	2205.98	70.98	235.95	439.36	216.78	243.71	192.40	244.28	143.80
540.	133.00	2254.05	73.32	240.92	448.94	221.51	248.84	197.36	249.46	147.34
560.	138.62	2302.30	75.69	245.90	458.56	226.27	253.98	202.35	254.65	150.90
580.	144.31	2350.73	78.08	250.89	468.22	231.03	259.13	207.37	259.86	154.48
600.	150.09	2399.35	80.50	255.90	477.90	235.81	264.29	212.42	265.07	158.08
620.	155.93	2448.15	82.93	260.91	487.62	240.61	269.46	217.50	270.30	161.69
640.	161.85	2497.13	85.39	265.94	497.37	245.42	274.64	222.61	275.54	165.33
660.	167.85	2546.30	87.87	270.98	507.16	250.24	279.83	227.76	280.79	168.98
680.	173.91	2595.66	90.38	276.03	516.98	255.08	285.04	232.93	286.05	172.65
700.	180.05	2645.20	92.90	281.10	526.83	259.93	290.25	238.13	291.33	176.33
720.	186.26	2694.93	95.45	286.17	536.71	264.79	295.47	243.36	296.61	180.04
740.	192.53	2744.85	98.01	291.26	546.63	269.67	300.70	248.62	301.91	183.76

(1) Incremental enthalpy of combustion for carbon, hydrogen and sulfur, ideal gas enthalpy for remaining gases.

Not for Resale

Copyright ASME International
Provided by IHS under license with ASME
No reproduction or networking permitted without license from IHS

TABLE 5.4.1 (Cont'd)

Gas Temp., °F	Carbon	Hydrogen	Sulfur	Dry Air	Water Vapor	Oxygen	Nitrogen	Carbon Dioxide	Carbon Monoxide	Sulfur Dioxide
760.	198.88	2794.96	100.60	296.36	556.58	274.56	305.95	253.91	307.22	187.49
780.	205.29	2845.26	103.20	301.48	566.56	279.46	311.20	259.22	312.54	191.24
800.	211.77	2895.75	105.83	306.60	576.58	284.38	316.47	264.56	317.87	195.01
820.	218.31	2946.44	108.47	311.74	586.62	289.31	321.74	269.93	323.21	198.80
840.	224.92	2997.32	111.13	316.89	596.70	294.25	327.02	275.33	328.57	202.60
860.	231.59	3048.39	113.81	322.05	606.82	299.20	332.32	280.75	333.94	206.41
880.	238.32	3099.66	116.50	327.23	616.96	304.16	337.62	286.20	339.31	210.24
900.	245.12	3151.12	119.22	332.42	627.14	309.14	342.94	291.67	344.70	214.08
920.	251.97	3202.79	121.95	337.62	637.35	314.13	348.26	297.16	350.10	217.94
940.	258.88	3254.65	124.69	342.83	647.59	319.13	353.60	302.69	355.51	221.81
960.	265.85	3306.71	127.45	348.06	657.87	324.14	358.94	308.23	360.93	225.70
980.	272.88	3358.98	130.23	353.30	668.18	329.16	364.30	313.80	366.36	229.59
1000.	279.96	3411.44	133.02	358.55	678.52	334.19	369.67	319.39	371.81	233.51
1020.	287.10	3464.11	135.83	363.81	680.89	339.23	375.04	325.01	377.26	237.43
1040.	294.29	3516.99	138.65	369.09	699.29	344.29	380.43	330.64	382.73	241.37
1060.	301.53	3570.07	141.48	374.37	709.73	349.35	385.83	336.30	388.20	245.31
1080.	308.82	3623.35	144.33	379.67	720.20	354.43	391.23	341.98	393.69	249.27
1100.	316.16	3676.85	147.19	384.98	730.70	359.51	396.65	347.68	399.19	253.24
1120.	323.56	3730.55	150.06	390.31	741.24	364.61	402.08	353.40	404.70	257.23
1140.	331.00	3784.47	152.95	395.64	751.80	369.71	407.52	359.15	410.22	261.22
1160.	338.48	3838.59	155.84	400.99	762.40	374.83	412.97	364.91	415.75	265.22
1180.	346.01	3892.93	158.75	406.35	773.04	379.95	418.43	370.69	421.29	269.24
1200.	353.59	3947.48	161.66	411.71	783.70	385.09	423.90	376.49	426.84	273.26
1220.	361.21	4002.25	164.59	417.10	794.40	390.23	429.38	382.31	432.41	277.30
1240.	368.87	4057.23	167.53	422.49	805.12	395.38	434.87	388.15	437.98	281.34
1260.	376.57	4112.43	170.47	427.89	815.89	400.55	440.37	394.00	443.57	285.39
1280.	304.31	4167.85	173.42	433.30	826.68	405.72	445.88	399.88	449.16	289.46
1300.	392.09	4223.49	176.39	438.73	837.51	410.90	451.40	405.77	454.77	293.53
1320.	399.91	4279.35	179.36	444.16	848.37	416.09	456.94	411.67	460.38	297.60
1340.	407.76	4335.43	182.34	449.61	859.26	421.29	462.48	417.59	466.01	301.69
1360.	415.65	4391.74	185.32	455.07	870.18	426.49	468.04	423.53	471.65	305.78
1380.	423.57	4448.27	188.31	460.53	881.14	431.71	473.60	429.49	477.30	309.89
1400.	431.52	4505.03	191.31	466.01	892.13	436.93	479.18	435.45	482.96	314.00
1420.	439.51	4562.01	194.31	471.50	903.15	442.16	484.76	441.44	488.63	318.11
1440.	447.53	4619.22	197.32	476.99	914.20	447.40	490.36	447.43	494.31	322.23
1460.	455.57	4676.67	200.33	482.50	925.29	452.64	495.97	453.44	500.00	326.36
1480.	463.65	4734.34	203.35	488.01	936.41	457.90	501.58	459.47	505.70	330.50
1500.	471.75	4792.25	206.37	493.54	947.56	463.16	507.21	465.50	511.41	334.64
1520.	479.88	4850.39	209.39	499.07	958.74	468.43	512.85	471.55	517.13	338.78
1540.	488.03	4908.76	212.42	504.62	969.96	473.70	518.50	477.61	522.87	342.93
1560.	496.21	4967.37	215.45	510.17	981.21	478.98	524.16	483.68	528.61	347.09
1580.	504.40	5026.22	218.48	515.73	992.49	484.27	529.84	489.77	534.36	351.25
1600.	512.62	5085.30	221.52	521.30	1003.81	489.57	535.52	495.86	540.13	355.41
1620.	520.86	5144.63	224.55	526.88	1015.15	494.87	541.21	501.97	545.90	359.58
1640.	529.12	5204.19	227.59	532.46	1026.53	500.18	546.92	508.08	551.69	363.75
1660.	537.40	5264.00	230.62	538.06	1037.95	505.50	552.63	514.20	557.48	367.92
1680.	545.69	5324.05	233.66	543.66	1049.39	510.82	558.36	520.34	563.29	372.10
1700.	553.99	5384.35	236.69	549.27	1060.87	516.15	564.10	526.48	569.11	376.28

Not for Resale

Copyright ASME International
Provided by IHS under license with ASME
No reproduction or networking permitted without license from IHS

TABLE 5.4.1 (Cont'd)

Gas Temp., °F	Carbon	Hydrogen	Sulfur	Dry Air	Water Vapor	Oxygen	Nitrogen	Carbon Dioxide	Carbon Monoxide	Sulfur Dioxide
1720.	562.32	5444.89	239.73	554.89	1072.38	521.48	569.85	532.63	574.93	380.46
1740.	570.65	5505.68	242.76	560.51	1083.93	526.82	575.61	538.78	580.77	384.65
1760.	579.00	5566.72	245.79	566.15	1095.51	532.17	581.38	544.95	586.62	388.84
1780.	587.35	5628.00	248.82	571.79	1107.12	537.52	587.16	551.12	592.48	393.03
1800.	595.72	5689.54	251.84	577.43	1119.76	542.88	592.95	557.30	598.34	397.22
1820.	604.09	5751.33	254.87	583.09	1130.44	548.24	598.76	563.48	604.22	401.41
1840.	612.47	5813.38	257.88	588.75	1142.15	553.61	604.57	569.67	610.11	405.60
1860.	620.86	5875.68	260.90	594.42	1153.89	558.98	610.40	575.87	616.01	409.79
1880.	629.25	5938.23	263.91	600.09	1165.66	564.36	616.24	582.07	621.92	413.98
1900.	637.65	6001.05	266.91	605.77	1177.47	569.74	622.08	588.27	627.84	418.17
1920.	646.04	6064.12	269.91	611.46	1189.31	575.13	627.95	594.48	633.77	422.37
1940.	654.44	6127.45	272.90	617.15	1201.19	580.52	633.82	600.69	639.71	426.56
1960.	662.84	6191.04	275.89	622.85	1213.09	585.91	639.70	606.91	645.66	430.75
1980.	671.24	6254.90	278.87	628.56	1225.04	591.31	645.59	613.12	651.62	434.93
2000.	679.63	6319.02	281.84	634.27	1237.01	596.72	651.50	619.34	657.59	439.12
2020.	688.03	6383.40	284.81	639.99	1249.02	602.12	657.42	625.57	663.57	443.31
2040.	696.41	6448.05	287.76	645.71	1261.06	607.54	663.35	631.79	669.56	447.49
2060.	704.79	6512.97	290.71	651.44	1273.13	612.95	669.29	638.01	675.56	451.67
2080.	713.17	6578.15	293.65	657.17	1285.24	618.37	675.24	644.24	681.58	455.85
2100.	721.53	6643.61	296.58	662.91	1297.38	623.79	681.20	650.47	687.60	460.02
2120.	729.09	6709.34	299.50	668.66	1309.55	629.22	687.17	656.69	693.63	464.19
2140.	738.23	6775.34	302.40	674.41	1321.76	634.65	693.16	662.92	699.67	468.36
2160.	746.57	6841.62	305.30	680.17	1334.00	640.08	699.16	669.14	705.72	472.52
2180.	754.89	6908.17	308.19	685.93	1346.27	645.52	705.17	675.36	711.79	476.68
2200.	763.19	6974.99	311.06	691.70	1358.58	650.95	711.19	681.58	717.86	480.84
2220.	771.48	7042.10	313.92	697.47	1370.92	656.39	717.22	687.80	723.94	484.99
2240.	779.76	7109.48	316.77	703.25	1383.29	661.84	723.27	694.02	730.03	489.13
2260.	788.01	7177.14	319.61	709.03	1395.70	667.28	729.32	700.23	736.14	493.27
2280.	796.25	7245.09	322.43	714.82	1408.14	672.73	735.39	706.44	742.25	497.41
2300.	804.47	7313.32	325.24	720.62	1420.61	678.18	741.47	712.64	748.37	501.53
2320.	812.66	7381.83	328.03	726.42	1433.12	683.63	747.56	718.84	754.51	505.65
2340.	820.84	7450.63	330.81	732.22	1445.66	689.09	753.66	725.04	760.65	509.77
2360.	828.99	7519.72	333.58	738.03	1458.24	694.54	759.78	731.23	766.80	513.88
2380.	837.11	7589.09	336.32	743.85	1470.85	700.00	765.91	737.42	772.96	517.98
2400.	845.21	7658.75	339.05	749.67	1483.49	705.46	772.04	743.59	779.14	522.07
2420.	853.28	7728.70	341.77	755.50	1496.17	710.92	778.20	749.77	785.32	526.16
2440.	861.33	7798.95	344.47	761.33	1508.88	716.38	784.36	755.93	791.51	530.24
2460.	869.34	7869.49	347.15	767.18	1521.62	721.84	790.53	762.09	797.72	534.30
2480.	877.32	7940.32	349.81	773.02	1534.40	727.30	796.72	768.24	803.93	538.37
2500.	885.27	8011.45	352.45	778.87	1547.21	732.77	802.92	774.38	810.15	542.42
2520.	893.19	8082.88	355.07	784.73	1560.05	738.23	809.13	780.52	816.39	546.46
2540.	901.07	8154.60	357.68	790.60	1572.93	743.70	815.35	786.64	822.63	550.49
2560.	908.92	8226.62	360.26	796.47	1585.85	749.16	821.59	792.76	828.88	554.52
2580.	916.76	8298.95	362.83	802.35	1598.79	754.63	827.84	798.86	835.15	558.53
2600.	924.50	8371.58	365.37	808.24	1611.77	760.09	834.09	804.96	841.42	562.53
2620.	932.24	8444.51	367.89	814.13	1624.79	765.56	840.37	811.04	847.70	566.53
2640.	939.93	8517.74	370.39	820.03	1637.84	771.02	846.65	817.12	854.00	570.51
2660.	947.58	8591.28	372.87	825.94	1650.92	776.49	852.95	823.18	860.30	574.48

Not for Resale

Copyright ASME International
Provided by IHS under license with ASME
No reproduction or networking permitted without license from IHS

TABLE 5.4.1 (Cont'd)

Gas Temp., °F	Carbon	Hydrogen	Sulfur	Dry Air	Water Vapor	Oxygen	Nitrogen	Carbon Dioxide	Carbon Monoxide	Sulfur Dioxide
2680.	955.19	8665.13	375.33	831.86	1664.04	781.96	859.26	829.23	866.61	578.44
2700.	962.76	8739.29	377.76	837.79	1677.19	787.42	865.58	835.27	872.93	582.38
2720.	970.28	8813.76	380.17	843.72	1690.38	792.88	871.91	841.29	879.27	586.32
2740.	977.75	8888.54	382.55	849.66	1703.59	798.35	878.26	847.31	885.61	590.24
2760.	985.18	8963.63	384.91	855.62	1716.85	803.81	884.61	853.30	891.96	594.15
2780.	992.55	9039.03	387.25	861.58	1730.14	809.27	890.99	859.29	898.32	598.05
2800.	999.88	9114.75	389.56	867.55	1743.46	814.73	897.37	865.26	904.69	601.93
2820.	1007.16	9190.79	391.84	873.53	1756.81	820.19	903.76	871.21	911.07	605.80
2840.	1014.38	9267.15	394.10	879.52	1770.20	825.65	910.17	877.15	917.47	609.66
2860.	1021.55	9343.82	396.33	885.53	1783.63	831.10	916.59	883.08	923.87	613.50
2880.	1028.67	9420.81	398.54	891.54	1797.09	836.56	923.03	888.99	930.28	617.33
2900.	1035.73	9498.13	400.72	897.57	1810.58	842.01	929.47	894.88	936.70	621.14
2920.	1042.74	9575.77	402.86	903.61	1824.11	847.46	935.93	900.75	943.13	624.94
2940.	1049.68	9653.73	404.99	909.66	1837.67	852.91	942.40	906.61	949.57	628.72
2960.	1056.57	9732.02	407.08	915.73	1851.27	858.36	948.89	912.45	956.02	632.49
2980.	1063.39	9810.63	409.14	921.81	1864.90	863.80	955.38	918.27	962.48	636.24
3000.	1070.16	9889.58	411.17	927.90	1878.57	869.24	961.89	924.07	968.95	639.98
3020.	1076.86	9968.85	413.17	934.01	1892.27	874.68	968.41	929.86	975.43	643.70
3040.	1083.50	10048.45	415.14	940.14	1906.00	880.12	974.95	935.62	981.92	647.40
3060.	1090.07	10128.38	417.09	946.28	1919.77	885.55	981.50	941.36	988.42	651.08
3080.	1096.57	10208.65	418.99	952.43	1933.58	890.98	988.06	947.09	994.93	654.75
3100.	1103.01	10289.25	420.87	958.61	1947.42	896.41	994.63	952.79	1001.45	658.40
3120.	1109.38	10370.19	422.71	964.80	1961.29	901.83	1001.22	958.47	1007.97	662.03
3140.	1115.68	10451.47	424.53	971.01	1975.20	907.25	1007.82	964.13	1014.51	665.65
3160.	1121.91	10533.08	426.30	977.24	1989.14	912.67	1014.43	969.77	1021.06	669.24
3180.	1128.06	10615.04	428.05	983.49	2003.12	918.09	1021.05	975.39	1027.62	672.82
3200.	1134.14	10697.33	429.76	989.76	2017.13	923.50	1027.69	980.98	1034.18	676.38
3220.	1140.15	10779.97	431.43	996.05	2031.18	928.90	1034.34	986.55	1040.76	679.92
3240.	1146.08	10862.95	433.07	1002.37	2045.26	934.30	1041.01	992.10	1047.35	683.44
3260.	1151.93	10946.27	434.67	1008.70	2059.38	939.70	1047.69	997.62	1053.94	686.93
3280.	1157.71	11029.94	436.24	1015.06	2073.53	945.09	1054.38	1003.12	1060.55	690.41
3300.	1163.41	11113.96	437.77	1021.45	2087.72	950.48	1061.08	1008.59	1067.16	693.87
3320.	1169.02	11198.33	439.26	1027.86	2101.94	955.87	1067.80	1014.04	1073.79	697.31
3340.	1174.55	11283.04	440.72	1034.30	2116.20	961.25	1074.53	1019.46	1080.42	700.72
3360.	1180.00	11368.11	442.14	1040.76	2130.49	966.62	1081.27	1024.85	1087.07	704.12
3380.	1185.37	11453.53	443.52	1047.25	2144.82	971.99	1088.03	1030.22	1093.72	707.49
3400.	1190.65	11539.31	444.86	1053.78	2159.18	977.36	1094.80	1035.56	1100.38	710.84
3420.	1195.84	11625.44	446.16	1060.33	2173.58	982.72	1101.58	1040.88	1107.06	714.17
3440.	1200.95	11711.93	447.42	1066.91	2188.01	988.07	1108.38	1046.16	1113.74	717.48
3460.	1205.96	11798.77	448.65	1073.53	2202.48	993.42	1115.19	1051.42	1120.43	720.76
3480.	1210.89	11885.97	449.83	1080.17	2216.98	998.76	1122.02	1056.65	1127.13	724.02
3500.	1215.79	11973.54	450.97	1086.86	2231.52	1004.10	1128.85	1061.85	1133.84	727.26
3520.	1220.46	12061.46	452.07	1093.58	2246.09	1009.43	1135.70	1067.02	1140.56	730.47
3540.	1225.11	12149.75	453.12	1100.33	2260.70	1014.76	1142.57	1072.16	1147.29	733.66
3560.	1229.66	12238.41	454.14	1107.12	2275.35	1020.08	1149.45	1077.27	1154.03	736.82
3580.	1234.12	12327.42	455.11	1113.95	2290.03	1025.39	1156.34	1082.35	1160.78	739.97
3600.	1238.48	12416.81	456.04	1120.82	2304.74	1030.70	1163.24	1087.40	1167.54	743.08
3620.	1242.74	12506.56	456.92	1127.74	2319.49	1036.00	1170.16	1092.42	1174.31	746.17

Not for Resale

Copyright ASME International
Provided by IHS under license with ASME
No reproduction or networking permitted without license from IHS

TABLE 5.4.1 (Cont'd)

Gas Temp., °F	Carbon	Hydrogen	Sulfur	Dry Air	Water Vapor	Oxygen	Nitrogen	Carbon Dioxide	Carbon Monoxide	Sulfur Dioxide
3640.	1246.90	12596.68	457.76	1134.69	2334.28	1041.29	1177.09	1097.40	1181.09	749.24
3660.	1250.96	12687.18	458.56	1141.69	2349.10	1046.58	1184.04	1102.36	1187.87	752.27
3680.	1254.92	12778.04	459.31	1148.73	2363.96	1051.86	1191.00	1107.27	1194.67	755.29
3700.	1258.77	12869.28	460.01	1155.82	2378.85	1057.13	1197.97	1112.16	1201.48	758.27
3720.	1262.52	12960.90	460.67	1162.96	2393.78	1062.40	1204.96	1117.01	1208.29	761.23
3740.	1266.16	13052.88	461.28	1170.15	2408.74	1067.66	1211.96	1121.83	1215.12	764.17
3760.	1269.70	13145.25	461.84	1177.39	2423.74	1072.91	1218.98	1126.61	1221.95	767.07
3780.	1273.13	13238.00	462.36	1184.68	2438.77	1078.15	1226.00	1131.36	1228.80	769.95
3800.	1276.45	13331.12	462.83	1192.02	2453.84	1083.39	1233.05	1136.08	1235.65	772.80
3820.	1279.66	13424.63	463.25	1199.42	2468.95	1088.62	1240.10	1140.75	1242.51	775.62
3840.	1282.75	13518.51	463.63	1206.88	2484.09	1093.84	1247.17	1145.39	1249.39	778.42
3860.	1285.74	13612.79	463.95	1214.39	2499.27	1099.05	1254.26	1150.00	1256.27	781.18
3880.	1288.61	13707.44	464.22	1221.96	2514.48	1104.26	1261.36	1154.56	1263.16	783.92
3900.	1291.36	13802.49	464.45	1229.60	2529.73	1109.45	1268.47	1159.09	1270.06	786.63
3920.	1294.00	13897.92	464.62	1237.30	2545.02	1114.64	1275.60	1163.59	1276.97	789.30
3940.	1296.52	13993.74	464.74	1245.06	2560.34	1119.82	1282.74	1168.04	1283.89	791.95
3960.	1298.92	14089.95	464.81	1252.89	2575.69	1124.99	1289.89	1172.45	1290.82	794.57
3980.	1301.20	14186.55	464.83	1260.79	2591.09	1130.15	1297.06	1176.83	1297.75	797.16
4000.	1303.37	14283.54	464.80	1268.76	2606.51	1135.30	1304.24	1181.16	1304.70	799.71

Not for Resale

SECTION 6 — REPORT OF RESULTS

6.1 The report shall be a document prepared in suitable form to present formally and clearly the observed data and calculations. Sufficient information shall be presented to demonstrate that all objectives of the test have been met. The test report should include in the order given the distinctive parts outlined in the following paragraphs.

6.1.1 The title page should present the following information: report number (optional); date(s) of test; title of test; location of test; owner or purchaser; manufacturers name; HRSG designation and identification; principals conducting and witnessing the test; principals preparing and approving the test report; and the date of the report.

6.1.2 The table of contents should list the major subdivisions of the report.

6.1.3 A brief summary should present the objects, results and conclusions of the test.

6.1.4 The detailed report should include the following:

6.1.4.1 Authorization for the test, its objects, guarantees, stipulated agreements, by whom the test was directed, the representative parties to the test.

6.1.4.2 Description including nameplate data of the equipment being tested and any other auxiliary apparatus, the operation of which may influence the test.

6.1.4.3 A line diagram indicating the cycle mechanical and thermal arrangements.

6.1.4.4 A brief history of the operation of the HRSG since initial start-up.

6.1.4.5 Method of test, giving arrangement of testing equipment, instruments used and their location, operating conditions and complete description of methods of measurement not prescribed by this Code.

6.1.4.6 Summary of measurements and observations.

6.1.4.7 Methods of calculation from observed data and agreements as to precision and accuracy.

6.1.4.8 Correction factors to be applied because of deviations of test conditions from those specified.

6.1.4.9 Specified or agreed allowances for possible error, including method of application.

6.1.4.10 Test performance reported under the following headings:

6.1.4.10.1 Test results computed on the basis of the test operating conditions.

6.1.4.10.2 Test results corrected to specified conditions if test operation conditions have deviated from those specified.

6.1.4.10.3 Statement that foregoing results are believed correct within a stated tolerance.

6.1.4.11 Tabular and graphical presentation of the test results.

6.1.4.12 Discussion of the tests, results and conclusions.

6.1.4.13 Log and data sheets.

6.1.4.14 Observers and their affiliations.

6.1.5 Appendices and illustrations to clarify description of the equipment and method and circumstance of test, description of methods of calibration of instruments, outline of details of calculations, descriptions and statements as to special testing apparatus, result of preliminary inspections and trials and any other supporting information shall be included as required to make the report a complete self-contained document of the entire undertaking.

Copyright ASME International
Provided by IHS under license with ASME
No reproduction or networking permitted without license from IHS
Not for Resale

SECTION 7 — APPENDIX

7.1 GUIDANCE IN SELECTION OF TEST METHOD

7.1.1 Evaluation Procedure. In order to compare test methods and/or the various designs for a given method, a unique value of merit for a test is required. The value of merit selected for this analysis is the "Overall Test Uncertainty." The definition of uncertainty and the procedure for combining individual measurement uncertainties, used in this code, is given in ASME PTC 6 REPORT – 1969.

7.1.2 General. Figure 7.1.1 compares the Overall Test Uncertainty associated with the three test methods in this Code. This comparison is shown in curve form for all combinations of heat input from waste heat gas (sensible energy) and fuel fired in the HRSG (chemical energy). All HRSGs considered in this analysis have an identical quantity of energy supplied from the gas turbine exhaust. Oxygen required for fuel firing in the HRSG is supplied in the gas turbine exhaust.

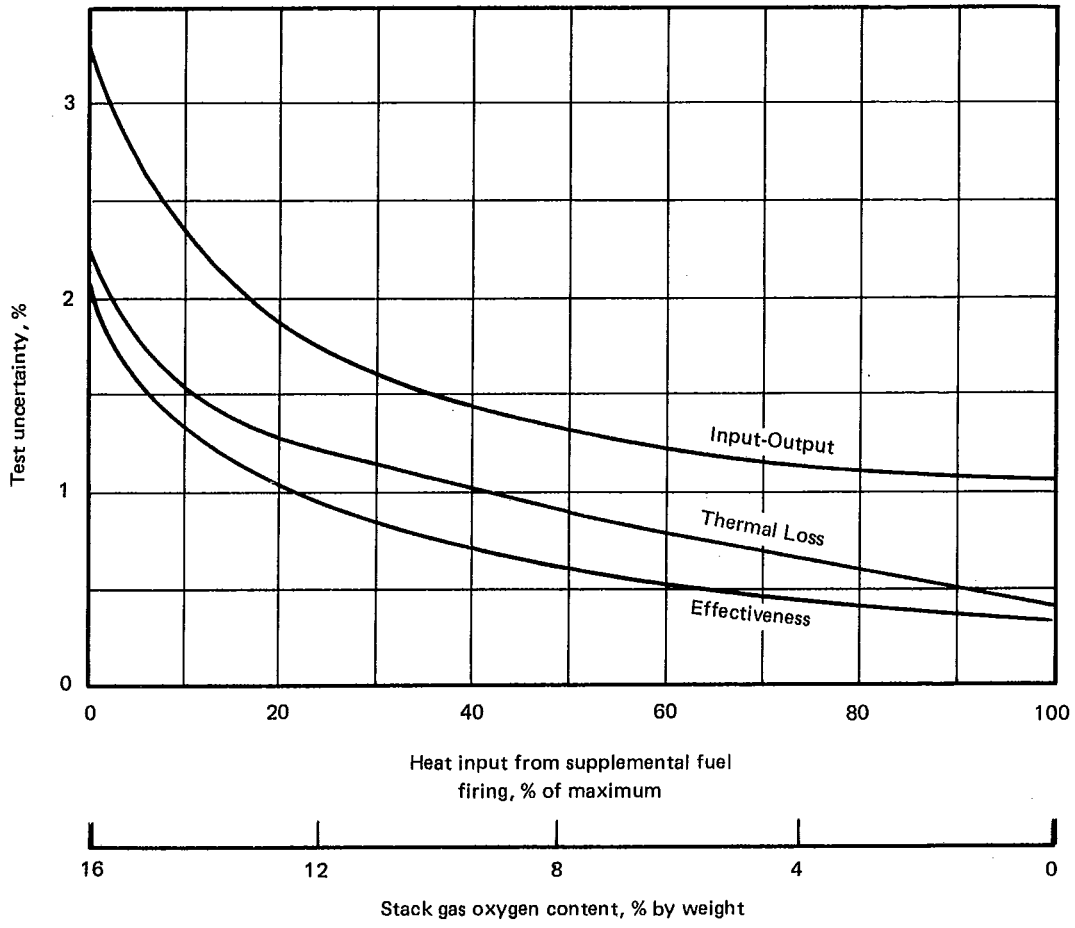

FIG. 7.1.1 COMPARATIVE TEST UNCERTAINTY FOR EFFICIENCY AND EFFECTIVENESS DETERMINATION

Copyright ASME International
Provided by IHS under license with ASME
No reproduction or networking permitted without license from IHS
Not for Resale

TABLE 7.1.1

Individual Measurement
Uncertainties and Resulting Overall Test Uncertainty

Input-Output Method

Measurement	Measurement Uncertainty (±)	Overall Test Uncertainty for HRSG Efficiency (± %)					
Energy input from HRSG firing (% of max)		0.0	6.0	18.0	36.4	69.8	100.0
Oxygen content in HRSG stack gas (% wt)		16	15	13	10	5	0
1. HRSG fuel flow	0.55%	—	0.11	0.23	0.33	0.40	0.44
2. Fuel heating value–*LHV*	0.47%	—	0.09	0.20	0.28	0.35	0.38
3. Feedwater flow	0.55%	0.55	0.55	0.55	0.55	0.55	0.55
4. Feedwater temperature	0.50%	0.10	0.10	0.10	0.10	0.10	0.10
5. Superheater outlet temperature	0.50%	0.19	0.19	0.19	0.19	0.19	0.19
6. Superheater outlet pressure	0.50%	0.01	0.01	0.01	0.01	0.01	0.01
7. Gas turbine exhaust temperature	10°F	1.20	0.97	0.70	0.49	0.32	0.24
8. Gas turbine exhaust flow	—						
Code meter	1.00%						
Gas turbine heat balance	3.00%	2.91	2.36	1.70	1.20	0.78	0.59
Duct traverse	5.00%						
Overall test uncertainty	±	3.20	2.62	1.95	1.49	1.16	1.05

TABLE 7.1.2

Individual Measurement
Uncertainties and Resulting Overall Test Uncertainty

Thermal-Loss Method

Measurement	Measurement Uncertainty (±)	Overall Test Uncertainty for HRSG Efficiency (± %)					
Energy input from HRSG firing (% of max)		0.0	6.0	18.0	36.4	69.8	100.0
Oxygen content in HRSG stack gas (% wt)		16	15	13	10	5	0
1. Ambient air temperature	3°F	0.55	0.43	0.29	0.19	0.11	0.08
2. HRSG fuel flow	0.55%	0.00	0.07	0.12	0.13	0.10	0.05
3. Fuel heating value–*LHV*	0.47%	0.00	0.06	0.10	0.11	0.08	0.04
4. HRSG exit gas temperature	10°F	1.95	1.51	1.04	0.70	0.41	0.28
5. Radiation and convection losses	20.0%	0.20	0.16	0.11	0.07	0.04	0.03
6. Gas turbine exhaust temperature	10°F	0.80	0.60	0.36	0.20	0.07	0.03
7. Gas turbine exhaust flow	—						
Code meter	1.0%						
Gas turbine heat balance	3.0%	0.03	0.33	0.63	0.71	0.51	0.26
Duct traverse	5.0%						
Overall test uncertainty	±	2.19	1.72	1.31	1.05	0.68	0.40

Copyright ASME International
Provided by IHS under license with ASME
No reproduction or networking permitted without license from IHS
Not for Resale

TABLE 7.1.3

Individual Measurement Uncertainties and Resulting Overall Test Uncertainty

Effectiveness

Measurement	Measurement Uncertainty (±)	Overall Test Uncertainty for HRSG Efficiency (± %)					
Energy input from HRSG firing (% of max)		0.0	6.0	18.0	36.4	69.8	100.0
Oxygen content in HRSG stack gas (% wt)		16	15	13	10	5	0
1. Feedwater flow	0.55%	0.00	0.00	0.00	0.00	0.00	0.00
2. Feedwater temperature	0.50%	0.10	0.10	0.10	0.10	0.10	0.10
3. Superheater outlet pressure	0.50%	0.00	0.00	0.00	0.00	0.00	0.00
4. Superheater outlet temperature	0.50%	0.06	0.06	0.00	0.00	0.00	0.00
5. Drum pressure	0.50%	0.05	0.02	0.00	0.00	0.00	0.00
6. HRSG entering gas temperature	1.00%	0.39	0.07	0.12	0.18	0.09	0.07
7. HRSG exist gas temperature	10°F	1.93	1.51	1.05	0.73	0.43	0.31
8. Gas turbine exhaust flow	—						
Code meter	1.00%						
Gas turbine heat balance	3.00%	0.00	0.00	0.00	0.00	0.00	0.00
Duct traverse	5.00%						
Overall test uncertainty	±	1.97	1.52	1.06	0.76	0.46	0.33

Tables 7.1.1, 7.1.2, and 7.1.3 display the sensitivity of the Overall Test Uncertainty to the individual measurement uncertainties for the three test methods in this Code. The individual measurement uncertainties shown are not intended to be authoritative but conform approximately with experience for the best available measurement procedures. For more intricate HRSGs than the example chosen, additional measurements will be required and their uncertainties included in the overall analysis.

Table 7.1.4 tabulates all the measurements required to use any or all of the test methods covered in this Code for the example chosen. For each test method the individual measurements that affect the Overall Test Uncertainty by more than 0.02 percent for a 1 percent uncertainty in the individual measurement are marked with the symbol •.

Table 7.1.5 contains the HRSG design data used for calculating the uncertainty sensitivities in this appendix.

7.1.3 Corrections for Off Design Site Conditions. Gas turbine flow and exhaust temperature vary substantially with ambient conditions. Since it may not be possible to closely duplicate design operating conditions (primarily due to ambient) during the test period corrections for off-design conditions are required. The magnitude of the correction varies with the test method used. In general the Input-Output method requires the largest performance correction factors for off design conditions and the Effectiveness method the smallest corrections. The Thermal-Loss method requires corrections for off-design conditions only slightly larger than the Effectiveness method.

TABLE 7.1.4

Sensitive Individual Measurements Required for Each Test Method

Measurement	Method		
	Efficiency by Input-Output	Efficiency by Thermal-Loss	Effectiveness
Flows			
Feedwater	●		
Steam			
Turbine exhaust	●	○	
Fuel to HRSG	○	○	
Temperatures			
Gas entering tubes	●	●	●
Gas leaving tubes		●	●
Feedwater	●		○
Superheated steam outlet	●		○
Ambient air	○	○	
Pressures			
Drum			●
Economizer inlet	○		○
Superheater outlet	○		○
Others			
Fuel heating value	○	○	
Radiation and convection losses		○	

Notes

1. Used 5.98 percent supplemental HRSG firing for above calculations.
2. Table is for the simple example shown in Table 7.1.5 with no blowdown or other energy streams entering or leaving the HRSG boundaries.
3. The symbol ○ indicates the values that must be measured to use the particular test method.
4. The symbol ● indicates that the Overall Test Uncertainty is affected by more than 0.02 percent for a 1 percent uncertainty in the individual measurement.

Copyright ASME International
Provided by IHS under license with ASME
No reproduction or networking permitted without license from IHS
Not for Resale

TABLE 7.1.5

Heat Recovery Steam Generator Designs

Superheated steam flow	lb/hr	184666	233931	342608	502449	893083	1,275,420
Economizer outlet water temp.	°F	480	480	470	460	450	450
Gas flow through HRSG	lb/hr	1,668,125	1,672,947	1,682,676	1,697,482	1,724,423	1,748,776
Fuel energy fired in HRSG—*LHV*	10^6Btu/hr	0.00	90.12	271.93	548.64	1052.12	1507.20
Fuel energy — % of maximum	%	0.00	5.98	18.04	36.40	69.81	100.00
Gas temp. entering superheater	°F	925	1112	1464	1949	2720	3283
Gas temp. entering evaporator	°F	835	1000	1309	1699	2371	2813
Gas temp entering economizer	°F	522	613	758	920	1069	1046
Gas temp. entering stack	°F	411	474	569	667	658	466
HRSG Exhaust Gas Analysis							
Oxygen	%wt	16.00	15.00	13.00	10.00	5.00	0.00
Carbon dioxide	%wt	5.89	6.81	8.65	11.42	16.01	20.62
Nitrogen	%wt	71.81	71.66	71.34	70.87	70.11	69.32
Water vapor	%wt	5.04	5.27	5.74	6.44	7.61	8.78
Sulfur dioxide	%wt	0.01	0.01	0.02	0.02	0.03	0.04
Other inerts	%wt	1.25	1.25	1.25	1.25	1.24	1.24

Notes

1. HRSG Efficiency was assumed to vary linearly from 60 percent to 90 percent with firing rate from unfired (16 percent O_2) to fully fired (0 percent O_2).
2. The following parameters were held constant for all designs:

(a)	Ambient temperature	59° F	(g)	Casing surface area	24000 ft²
(b)	Compressor inlet temperature	59° F	(h)	Surface temperature	134° F
(c)	Superheater outlet temperature	825° F	(i)	Ambient air velocity	10 fps
(d)	Superheater outlet pressure	600 psig	(j)	Emissivity	0.9
(e)	Feedwater temperature	240° F	(k)	No. 2 oil fuel—*LHV*	18688 Btu/lb
(f)	H.P. drum pressure	660 psig	(l)	Water injection to turbine	Yes

7.2 GAS FLOW MEASUREMENT

7.2.1 Guiding Principles for Flow Measurement. Many situations arise in which gas flow measurements must be made under field conditions. Of the many problems testing in place introduces is the fact that it is often not possible to find a test plane where the flow is closely uniform and parallel to the duct walls nor to provide methods of "conditioning" the flow to such a state. Seldom is one able to find an undisturbed run of several equivalent diameters or to insert flow straighteners. Lacking these options, measurements must be made in regions of non-uniform flow.

For large ducts, the most practical and indeed often the only method is the velocity traverse method. In this method, a suitable probe is inserted into the duct and the velocity is measured at a number of points. The (volume) rate of gas flow is the integral of the product of an elemental area and the velocity normal to this area over the duct cross section. In practice, it is customary to calculate the integral as the product of an "average" velocity and the total cross-sectional area. The average velocity must represent only that component normal to the duct cross section.

7.2.2 Selection of Traverse Plane

7.2.2.1 Optimum Traverse Plane. The optimum traverse plane shall be free of internal obstructions, at least eight equivalent diameters* downstream, and at least two equivalent diameters upstream of any bends, cross-sectional changes, or tees (branches). At least 75 percent of the traverse points shall indicate a velocity pressure at or above 1.0 in H_2O in order to minimize observer averaging errors due to fluctuation. It is recognized that seldom can such a traverse plane be found in field installations.

7.2.2.2 Non-permissible Traverse Plane. Traverse planes which exhibit any of the following shall not be used: (1) Planes less than one equivalent diameter downstream of major obstructions, (2) Planes exhibiting reverse flow, (3) Planes exhibiting vena contracta or separated flow.

7.2.2.3 Guidelines for Selection of Non-optimum Traverse Planes. In general, a traverse should be made where the flow velocities are as large as practicable. The probe types specified in this Code shall be capable of indicating the flow misalignment in a plane; therefore care shall be taken to insure that the major angle of misalign-

*Equivalent diameter = 4 x Hydraulic radius

$$= 4 \times \frac{\text{Cross-sectional area}}{\text{Wetted perimeter}}$$

Copyright ASME International
Provided by IHS under license with ASME
No reproduction or networking permitted without license from IHS
Not for Resale

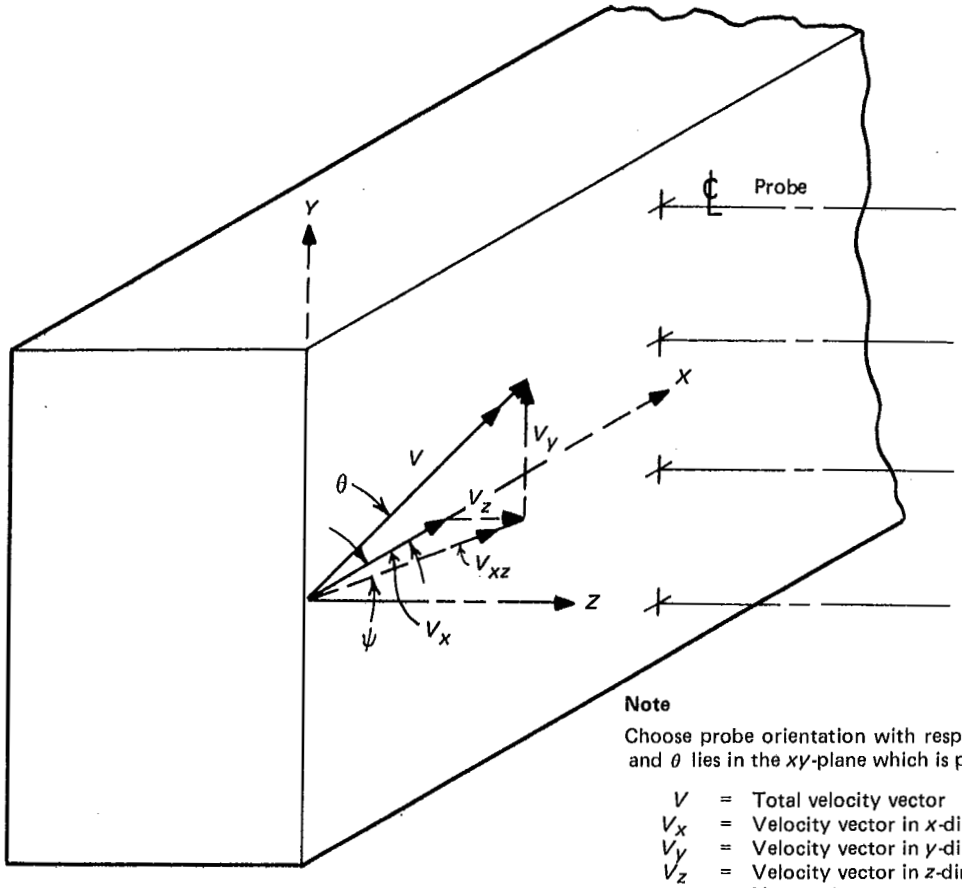

Note

Choose probe orientation with respect to flow stream such that $\theta >> \psi$, and θ lies in the xy-plane which is perpendicular to the probe axis.

V	=	Total velocity vector
V_x	=	Velocity vector in x-direction and normal to traverse plane
V_y	=	Velocity vector in y-direction and parallel to traverse plane
V_z	=	Velocity vector in z-direction and parallel to traverse plane
θ	=	Yaw angle
ψ	=	Pitch angle

FIG. 7.2.1

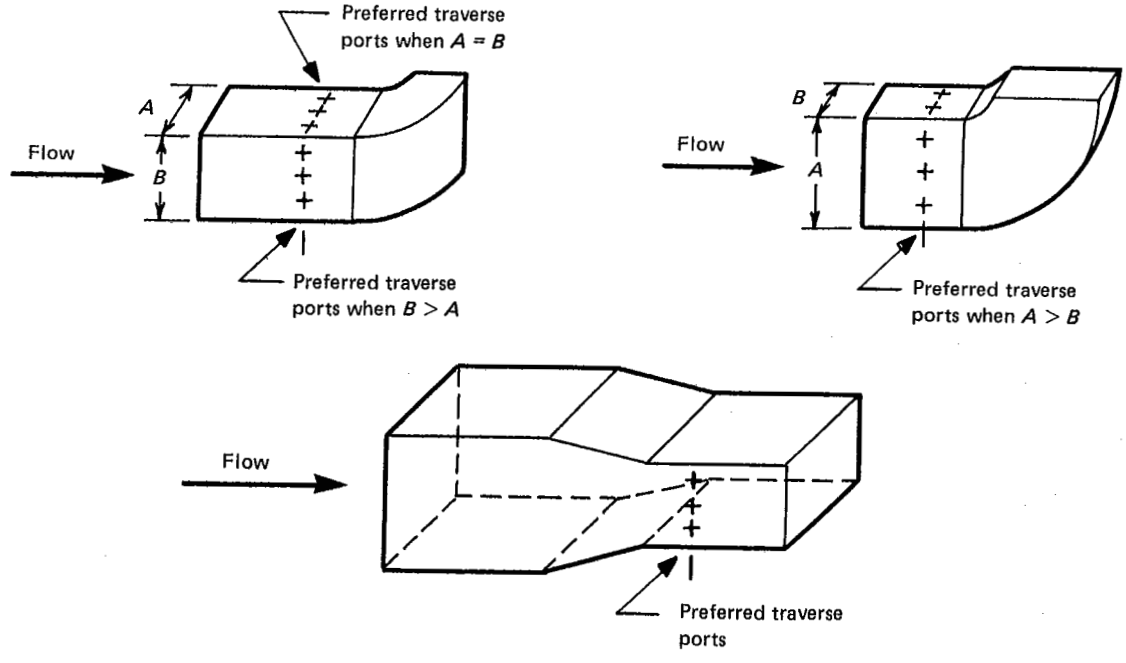

FIG. 7.2.2 PREFERRED TRAVERSE PORTS

Copyright ASME International
Provided by IHS under license with ASME
No reproduction or networking permitted without license from IHS
Not for Resale

ment lies in a plane perpendicular to the probe (Fig. 7.2.1). The following are suggestions for selecting a traverse plane in certain instances.

7.2.2.3.1 Reducing Transitions. Velocity measurements should be taken at the outlet of area-reducing transitions. Flow direction will be more uniform and have a higher velocity due to the reduction of cross-sectional area. Note that care must be taken to avoid regions of vena contracta or flow separation. See Fig. 7.2.2.

7.2.2.3.2 Diffusing Transitions. Measurements are to be avoided within these regions because of the potential for reverse flow.

7.2.2.3.3 Bends. When ducts have a rectangular cross section, the sample ports should be located on either of the long sides to permit traversing across the short dimension.

When square cross sections are traversed, the sample taps should be located in a manner such that a line drawn across the sample ports is perpendicular to the tangent line of the radius of curvature. Measurements should be made on the upstream side of the bend in all cases. See Fig. 7.2.2.

7.2.2.4 Internal Inspection and Measurement of Cross Section. An internal inspection of the ductwork at the proposed traverse plane shall be conducted by the parties to the test to insure that no obstruction will affect the measurements. The cross-sectional area shall be based on the average of four equally spaced measurements across each duct dimension for rectangular ducts, and on the basis of the average of four diametric measurements made 45 degrees to each other for circular ducts.

7.2.3 Determination of Sampling Grid

7.2.3.1 Circular Ducts

(1) Measurements shall be taken at the centroids of equal areas.

(2) Minimum of eight equally spaced radial traverse lines.

(3) 0.5 ft minimum distance between adjacent points on radial line common to both points.

(4) The number of test points shall be the larger of the following:

(a) 24 points

(b) Not less than 1 point/2 sq ft

Example:

Let D = Internal duct diameter

i = Number of circular rings into which profile is divided

n = Ordinal number of the ring

Then the corresponding centroidal axis diameter is

$$D_n = D\sqrt{1 - \frac{2n-1}{2i}} \qquad (1)$$

And the distance of the centroidal axis of the circular ring from the duct wall (interior) is then

$$a_n = \frac{D}{2}\left[1 - \sqrt{1 - \frac{2n-1}{2i}}\right] \qquad (2)$$

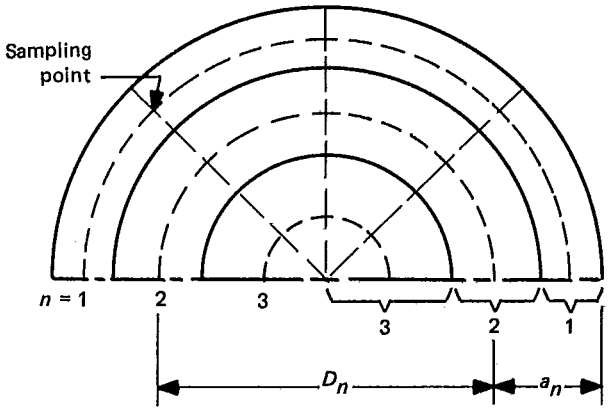

If $D \leqslant 7.8$ ft

Then 24 = Number of points, minimum

$\frac{24}{8}$ = Number of points/radial line

Therefore $i = 3$

From equation (2)

$$a_n = \frac{D}{2}\left[1 - \sqrt{1 - \frac{2n-1}{2i}}\right]$$

$D = 7.8$ ft

n	a_n, ft
1	0.34
2	1.14
3	2.31

If $D > 7.8$,

Say $D = 12$ ft

$$\text{Area} = \frac{\pi D^2}{4} = 113.1 \text{ ft}^2$$

$$\text{Number of points} = \frac{113.1 \text{ ft}^2}{2 \text{ ft}^2/\text{point}} = 56.55$$

If 56 is used as the total number of sample points, the elemental areas will be approximately 1 percent larger than the recommended maximum of 2 sq ft.

Copyright ASME International
Provided by IHS under license with ASME
No reproduction or networking permitted without license from IHS
Not for Resale

Therefore to meet sampling criteria 1 through 4, let:

No. of points = 60

No. of rays = 10

Then: $\frac{113.1\ \text{ft}^2}{60\ \text{points}} = 1.86\frac{\text{ft}^2}{\text{point}}$

60 points / 10 rays = 6 points / ray

Therefore: $l = 6$
$n = 1,2,...6$
$D = 12$

Then:

n	a_n, ft
1	0.26
2	0.80
3	1.42
4	2.13
5	3.00
6	4.27

7.2.3.2 Rectangular Ducts

(1) Measurements must be taken at centroids of equal areas.

(2) Let:

S = Aspect parameter

$$S = \frac{\text{Aspect ratio of elemental area}}{\text{Aspect ratio of duct cross section}}$$

Limits on S: $2/3 \leqslant S \leqslant 4/3$

(3) Long dimension of elemental area must align with long dimension of cross section.

(4) Then the number of test points shall be the larger of the following:

(a) 24 points

(b) Not less than 1 point/2 sq ft

Example:

Let X = Long dimension of duct cross section
x = Long dimension of elemental area
Y = Short dimension of duct cross section
y = Short dimension of elemental area

Then $S = \frac{x/y}{X/Y}$ = Aspect parameter

If $XY \leqslant 48$ sq ft

Then 24 = Minimum number of points required

Let $X = 8$
$Y = 4$

Elemental area = $\frac{(8)(4)}{24} = 1.33$ sq ft

Consider the following duct dimensions:

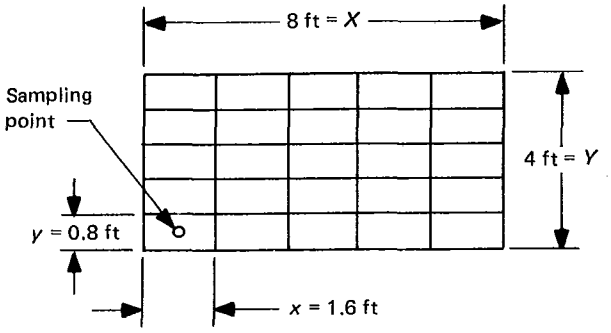

Since $\frac{X}{Y} = 2$

Then $S = \frac{x/y}{2}$

Limits on aspect ratio of x/y

$$\frac{2}{3} \leqslant \frac{x/y}{2} \leqslant \frac{4}{3}$$

$$\frac{4}{3} \leqslant \frac{x}{y} \leqslant \frac{8}{3}$$

or

$$1.33 \leqslant \frac{x}{y} \leqslant 2.67$$

Optimum: $\frac{x}{y} = 1.33 + \left(\frac{2.67 - 1.33}{2}\right) = 2.0$

Minimum number of points = 24

Sampl'g Grid Pattern	Total No. of Points =	Point Array Across	x	Down	Elemental Area Dimensions Long Side (x)	Short Side (y)	Aspect Ratio x/y
1	24	8		3	2.33	1.375	1.69
2	24	3		8	2.67	0.5	5.3
3	24	6		4	1.83	1.75	1.05
4	24	4		6	2.75	1.17	2.35
5	25	5		5	1.6	0.8	2.0

Sampling grid No. 5 best meets aspect parameter criterion.

Elemental area = (1.6)(0.8) = 1.28 sq ft

$S = \frac{1.6/0.8}{8/4} = 1.0$

Let $XY > 48$ sq ft

Copyright ASME International
Provided by IHS under license with ASME
No reproduction or networking permitted without license from IHS
Not for Resale

Then one sample point cannot represent more than 2 sq ft of area.

Assume X = 11 ft
Y = 7 ft

$$\text{Number of points} = \frac{(11)(7)}{2 \text{ sq ft/point}} = 38.5 \text{ points}$$

Round up to next convenient number, e.g., 40

$$\text{Area/point} = \frac{(11)(7)}{40} = 1.93 \text{ sq ft/ point}$$

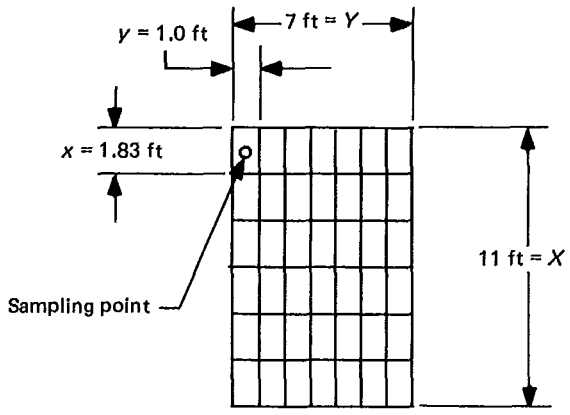

$$\frac{X}{Y} = \frac{11}{7} = 1.57$$

$$\frac{2}{3} \leqslant \frac{x/y}{1.57} \leqslant \frac{4}{3}$$

$$1.05 \leqslant x/y \leqslant 2.09$$

$$\text{Optimum } x/y = 1.05 + \left(\frac{2.09\text{-}1.05}{2}\right) = 1.57$$

Sampl'g Grid Pattern	Total No. of Points	=	Combination of Sample Points Across	x	Down	Elemental Area Dimensions Long Side	–	Short Side	Aspect Ratio x/y
1	40	=	8	x	5	2.2	–	0.875	2.51
2	40	=	5	x	8	1.4	–	1.375	1.02
3	40	=	4	x	10	1.75	–	1.1	1.59
4	40	=	10	x	4	2.75	–	0.7	3.93
5	42	=	6	x	7	1.57	–	1.167	1.35
6	42	=	7	x	6	1.83	–	1.0	1.83

Sampling grid pattern No. 3 best fits the aspect parameter criterion, however, it does not meet criterion 3. Grid pattern 5 or 6 are equally acceptable. Grid pattern 6 would be the logical choice in terms of round number (1.0 ft) sample intervals.

Sampling area: $xy = (1.83)(1.0) = 1.83$ sq ft

$$\text{Aspect parameter: } S = \frac{x/y}{X/Y} = \frac{(1.83)(1.0)}{(11.0)(7.0)} = 1.16$$

7.2.4 Velocity Traverse

7.2.4.1 Pitot Static Tubes. Pitot tubes are permitted for those test situations where it can be shown that at least 75 percent of the measured velocity heads approach the stagnation pressure hole at a yaw angle of less than 5 degrees.

7.2.4.2 Directional Probe. Directional probes must be used for those situations which do not comply with the criterion of 7.2.4.1.

7.2.5 Probes

General Requirements. Probes used for velocity measurements must be capable of surviving the environment in which they will be used. They shall be adequately stiffened and supported to minimize whipping in the gas stream. Whenever such probes are inserted horizontally in a horizontally flowing gas stream, rigid support and adequate probe stiffness shall be provided to limit vertical displacement (droop) to not more than 12.5 percent of the height of an elemental area.

7.2.5.1 Pitot Static Tube. A standard Pitot static tube has the dimensions shown on Fig. 7.2.3.

7.2.5.2 Directional Probes. A directional probe as referred to in this Code shall be capable of simultaneously measuring the velocity pressure and sensing the included angle between the direction of the velocity and the nominal direction of flow. Two typical probes of this type are shown on Fig. 7.2.4.

7.2.6 Probe Calibration

7.2.6.1 Pitot-Static. Pitot-static tubes having the proportions shown on Fig. 7.2.3 are considered primary instruments and need not be calibrated provided they are maintained in the specified condition.

7.2.6.2 Other Probes. Calibration is required of all other probes. Probe calibration shall be performed at a minimum of eight equally spaced points within the Reynolds number range in which it will be used.

A free stream nozzle jet is the preferred method of probe calibration. Calibration may also be performed in a wind tunnel.

Free Jet Nozzle Method. The nozzle must conform to the configuration shown in Fig. 7.2.5. A standard Pitot-static tube shall be used as the calibration reference. The probe and the reference may be mounted symmetrically about the flow axis or may be arranged such that the

Copyright ASME International
Provided by IHS under license with ASME
No reproduction or networking permitted without license from IHS
Not for Resale

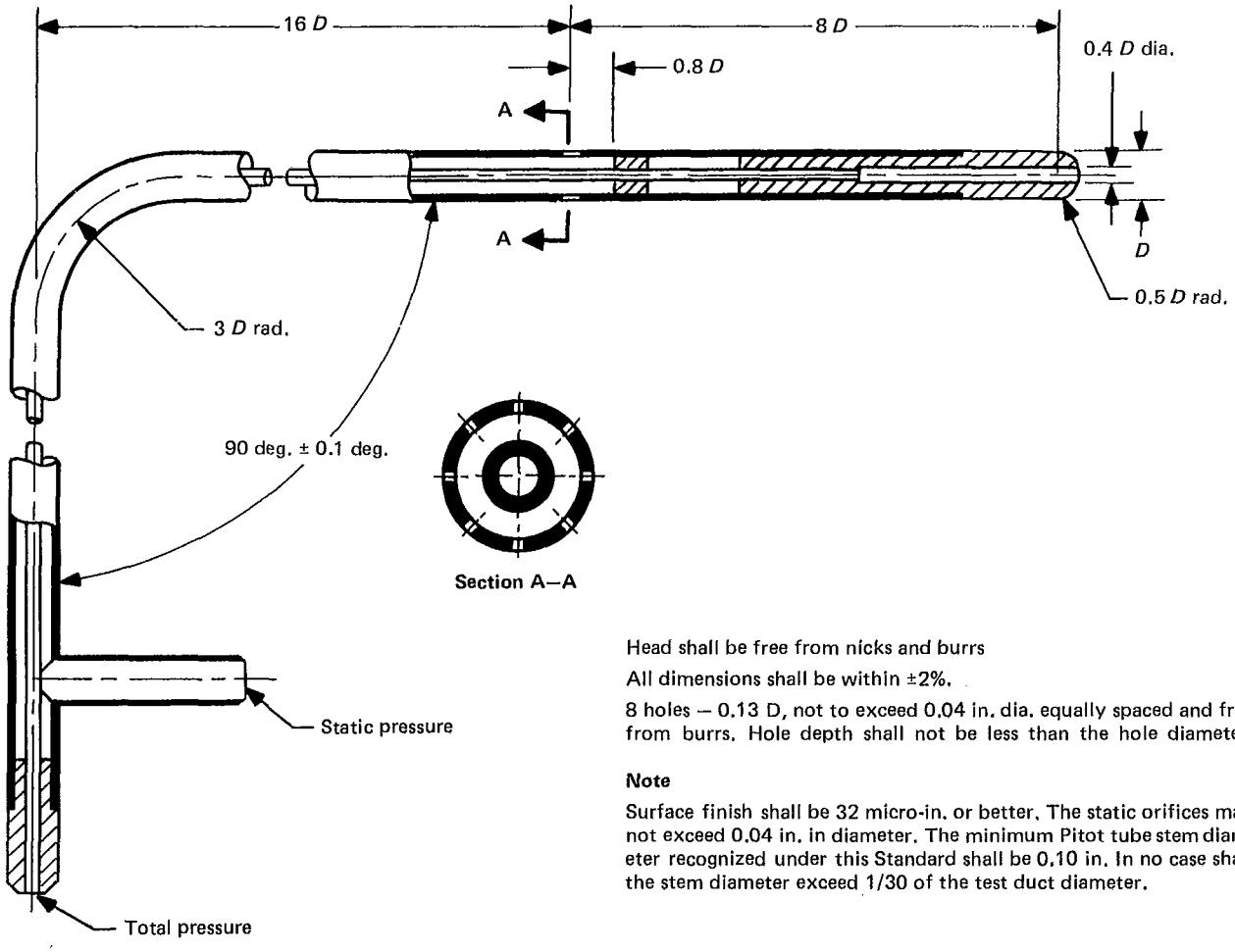

Head shall be free from nicks and burrs

All dimensions shall be within ±2%.

8 holes — 0.13 D, not to exceed 0.04 in. dia. equally spaced and free from burrs. Hole depth shall not be less than the hole diameter.

Note

Surface finish shall be 32 micro-in. or better. The static orifices may not exceed 0.04 in. in diameter. The minimum Pitot tube stem diameter recognized under this Standard shall be 0.10 in. In no case shall the stem diameter exceed 1/30 of the test duct diameter.

PITOT-STATIC TUBE WITH SPHERICAL HEAD

All other dimensions are the same as for spherical head Pitot-static tubes.

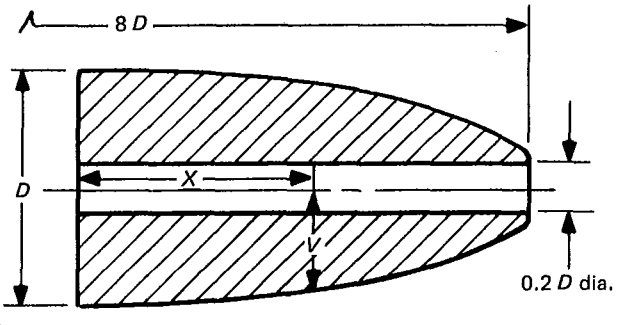

Note

For dimensions of the ellipsoidal head. Multiply X and V by D to obtain contour dimensions.

X	V	X	V
0.000	0.500	1.602	0.314
0.237	0.496	1.657	0.295
0.336	0.494	1.698	0.279
0.474	0.487	1.730	0.266
0.622	0.477	1.762	0.250
0.741	0.468	1.796	0.231
0.936	0.449	1.830	0.211
1.025	0.436	1.858	0.192
1.134	0.420	1.875	0.176
1.228	0.404	1.888	0.163
1.313	0.388	1.900	0.147
1.390	0.371	1.910	0.131
1.442	0.357	1.918	0.118
1.506	0.343	1.920	0.109
1.538	0.333	1.921	0.100
1.570	0.323		

ALTERNATE PITOT-STATIC TUBE WITH ELLIPSOIDAL HEAD

FIG. 7.2.3 PITOT-STATIC TUBES

Copyright ASME International
Provided by IHS under license with ASME
No reproduction or networking permitted without license from IHS

Not for Resale

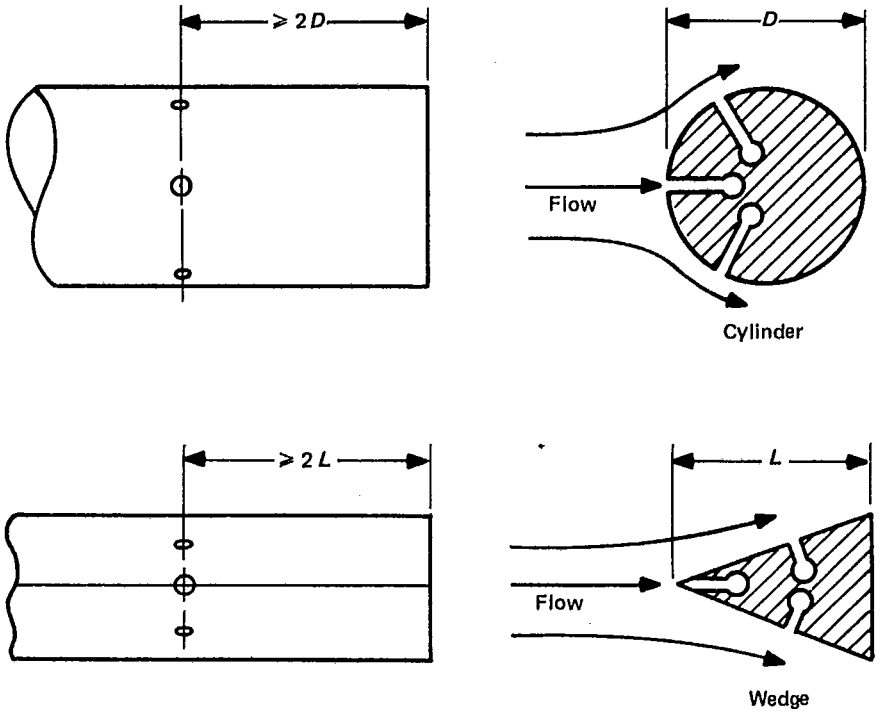

FIG. 7.2.4 TYPICAL DIRECTIONAL PROBES

probes each occupy the same point in the flow alternately. In the first case, care must be taken to insure that flow conditions are constant in time. In either case, total blockage of the flow stream shall not exceed 5 percent. See Fig. 7.2.6.

Wind Tunnel Method. A standard Pitot-static tube shall be used as the calibration reference. Flow conditions in the wind tunnel shall be sufficiently uniform to permit the insertion of both the probe and the reference simultaneously. Care shall be taken to eliminate interference between the probes. The total blockage of the two probes shall not exceed 5 percent of the tunnel cross section. The blockage of the probes shall not differ by more than 25 percent.

A probe factor shall be determined for each flow condition as follows:

$$K = \frac{\text{Velocity pressure of reference probe}}{\text{Velocity pressure of probe being calibrated}}$$

The probe factor *(K)* shall be plotted as the coordinate value of the probe Reynolds number which shall be plotted on the abscissa. The probe Reynolds number is derived as follows:

$$N_R = \frac{VD\rho}{\mu} \qquad (1)$$

and

$$V = \frac{1096.84}{60}\sqrt{\frac{P_V}{\rho}} \qquad (2)$$

Where

N_R = Probe Reynolds number
V = Velocity, ft/sec
D = Probe frontal width, ft
ρ = Density of calibrating medium, lbm/ft^3
μ = Absolute viscosity of calibrating medium, lbm/ft-sec
P_V = Indicated velocity head of probe being calibrated, in. H_2O

Combining equations (1) and (2):

$$N_R = 18.28\sqrt{\rho P_V}\,\frac{D}{\mu}$$

It should be noted that this approach provides a calibration factor which is independent of the calibrating medium.

Once a probe has been calibrated, it should be handled with care since large scratches and/or nicks on the upstream side near the pressure taps will alter its calibration.

Copyright ASME International
Provided by IHS under license with ASME
No reproduction or networking permitted without license from IHS
Not for Resale

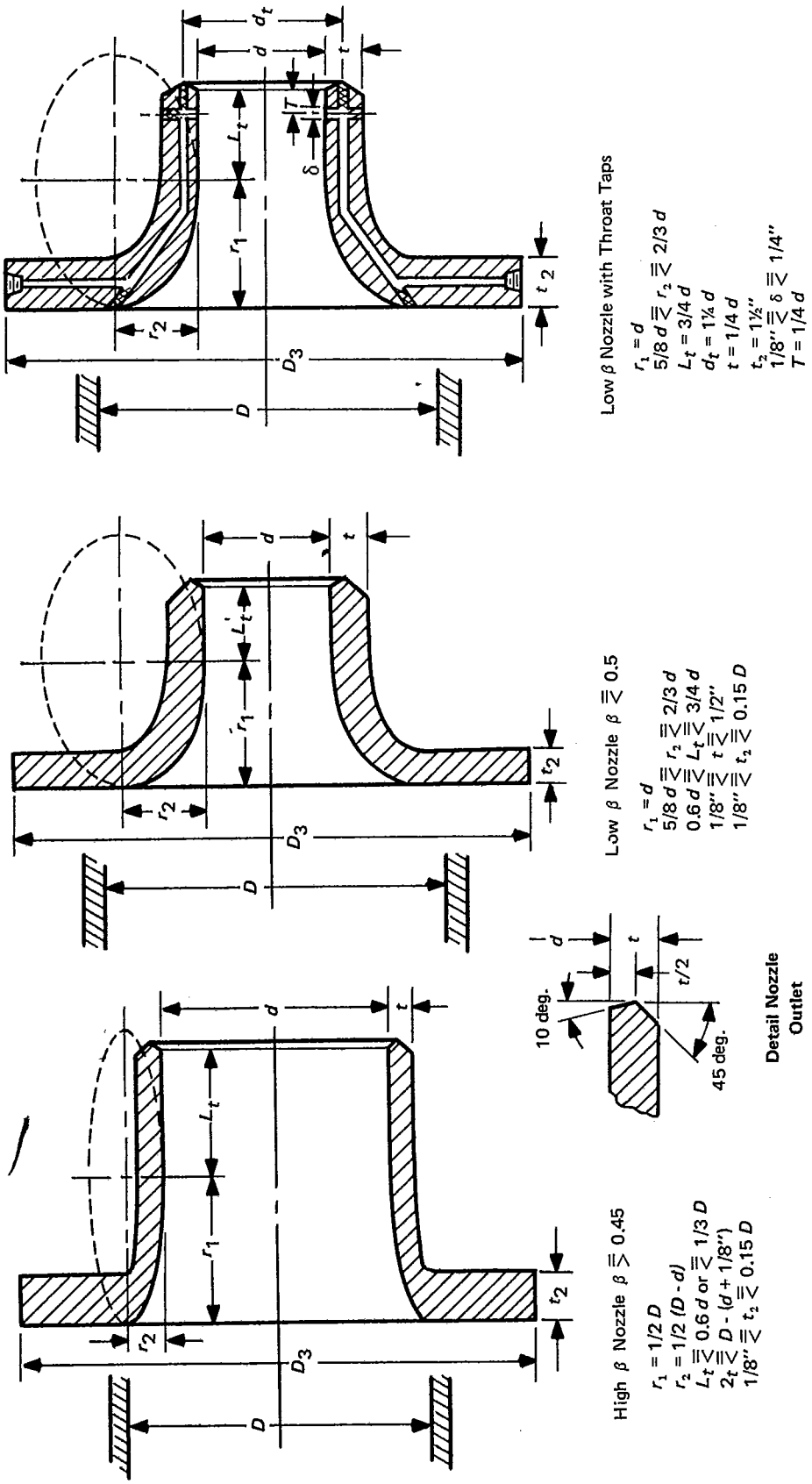

FIG. 7.2.5 RECOMMENDED PROPORTIONS OF ASME LONG-RADIUS FLOW NOZZLES

Copyright ASME International
Provided by IHS under license with ASME
No reproduction or networking permitted without license from IHS

Not for Resale

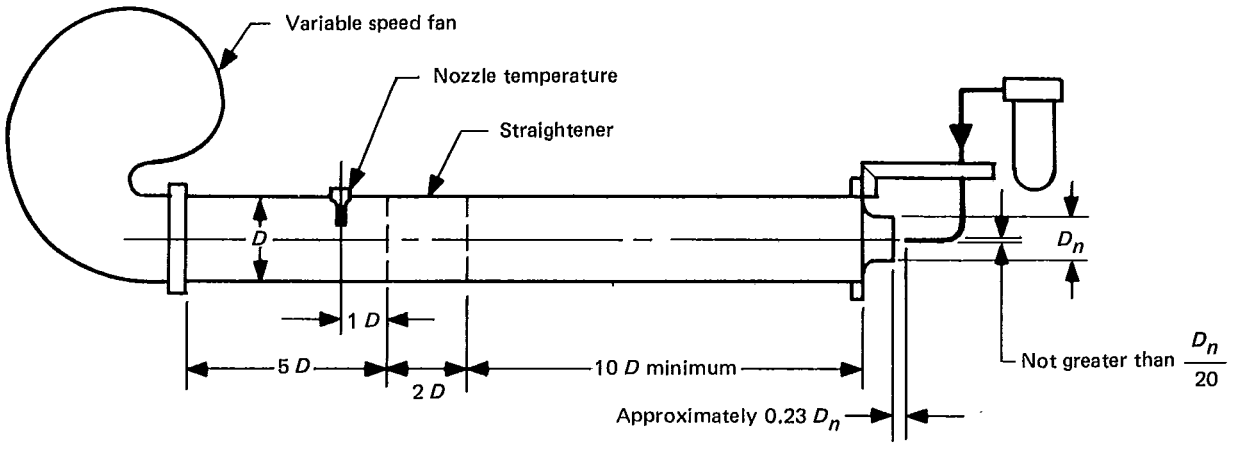

FIG. 7.2.6 FREE STREAM JET CALIBRATION

7.2.7 Differential Pressure Measurement Instrumentation

7.2.7.1 Accuracy. The specifications for instruments and methods of measurement which follow include accuracy requirements. The specified requirements correspond to two standard deviations and are based on an assumed normal distribution of the errors involved. The calibration procedures which are specified shall be employed to minimize systematic errors. Random errors can be established only from an adequate statistical sample. It is anticipated that calibration data will be accumulated on the various instruments prior to their selection for use in a particular test.

7.2.7.2 Probe Pressure Readings. Probe pressure readings shall be taken when the total pressure hole of the probe is aligned with the flow velocity. The probe shall be capable of indicating both the total pressure and a second pressure indicative of the static pressure. The difference between these pressures is indicative of the velocity pressure. This pressure differential shall be measured on an indicator, such as a manometer or equivalent differential pressure measuring device, with one leg connected to the total pressure tap of the applicable probe, and the other leg connected to a "static" pressure tap of the same probe. The total pressure shall be measured on a similar device, with one leg open to atmosphere.

7.2.7.3 Static Pressure. The static pressure shall be determined at each point of velocity measurement and shall be recorded as positive values for a duct pressure above the local barometric pressure and negative values for a duct pressure below the local barometric pressure.

(a) *Pitot Tubes.* The static pressure leg shall be used as the source of static pressure measurements.

(b) *Directional Probes.* The static pressure shall be derived in accordance with the following procedure.

$$P_S = P_T - K P'_V \text{ or } P_S = K P'_S$$

where

P_S = Static pressure
P_T = Total pressure (±) when probe is nulled
K = Probe coefficient
P'_V = Indicated velocity pressure when probe is aligned with flow velocity
P'_S = Indicated static pressure when probe is aligned with flow velocity

7.2.7.4 Manometers and Other Differential Pressure Indicating Instruments. Differential pressure shall be measured with manometers of the liquid column type using inclined or vertical legs or other instruments which provide a maximum error of 1 percent of the maximum observed reading.

7.2.7.5 Calibration. Each differential pressure indicating instrument shall be calibrated at both ends of the scale and at least nine equally spaced intermediate points in accordance with the following:

(a) When the differential pressure to be indicated falls in the range of 0 to 10 in. H_2O, calibration shall be against a water-filled hook gauge of the micrometer type or a precision micromanometer.

(b) When the pressure to be indicated is above 10 in. H_2O, calibration shall be against a water-filled hook gauge of the micrometer type, a precision micromanometer, or a water-filled U-tube.

7.2.7.6 Averaging. Since the flow pressures are never strictly steady, the differential pressure indicated on any

Copyright ASME International
Provided by IHS under license with ASME
No reproduction or networking permitted without license from IHS
Not for Resale

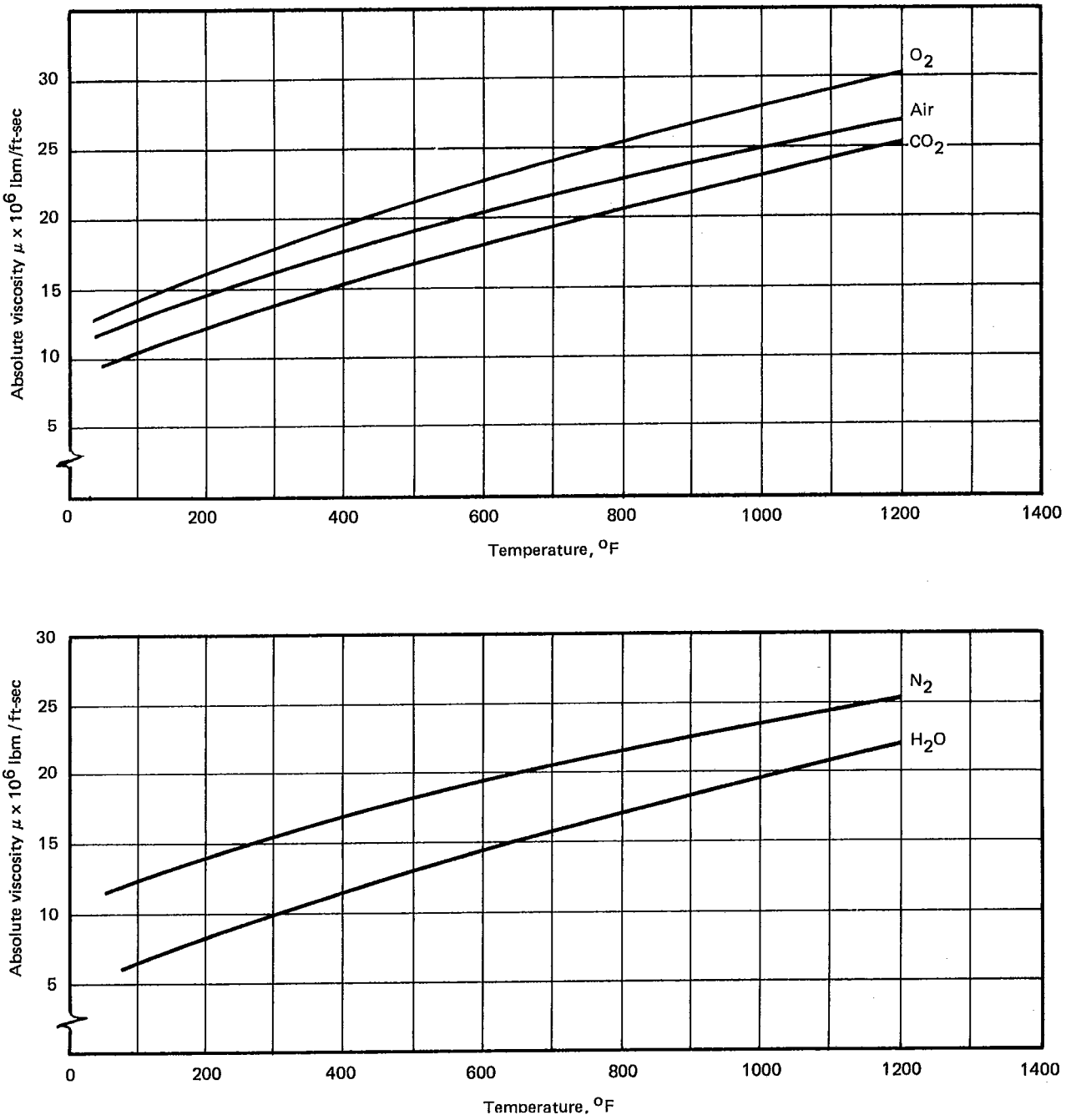

FIG. 7.2.7 CURVES DRAWN USING DATA TAKEN FROM FIGS. 7.2.8 AND 7.2.9

Copyright ASME International
Provided by IHS under license with ASME
No reproduction or networking permitted without license from IHS

Not for Resale

instrument will fluctuate with time. In order to obtain a reading, either the instrument must be damped or the readings must be averaged in a suitable manner. Averaging can sometimes be accomplished mentally, particularly if the fluctuations are small and regular.

When differential pressure measurements are taken for the purpose of measuring flow rate, it must be realized that the average differential pressure does not correspond to average flow rate, due to the square law between velocity and velocity pressure. To obtain true average flow rate it is necessary to obtain a graphic record of velocity pressure with a high-frequency-response instrument, derive from this a curve of the square root of velocity pressure and use the average of this square root curve to calculate velocity. It is possible to carry out this process automatically by electronic methods when an electric pressure transducer is the primary element.

7.2.7.7 Corrections. Manometer readings shall be corrected for any difference in specific weight of gauge fluid from standard, any difference in gas column balancing effect from standard, or any change in length of the graduated scale due to temperature. However, corrections may be omitted for temperatures between 58°F and 78°F, latitudes between 30° and 60° and elevations up to 5000 ft.

7.2.7.8 Other Differential Pressure Measuring Systems. Differential pressure measuring systems consisting of indicators other than manometers may be used if the combined error of the system does not exceed the combined error for an appropriate combination of manometers. For systems used to determine flow rate, the combined error shall not exceed that corresponding to 1 percent of the maximum observed velocity pressure or pressure differential reading during a test (indicator tolerance) plus 1 percent of the actual reading (averaging tolerance).

7.2.8 Computation of Results

7.2.8.1 Physical Properties of Gas Being Measured

7.2.8.1.1 Density of Dry Gas. The density will be required in converting gas velocity head to feet per minute and cfm to pounds per minute or vice versa. The density of dry flue gas can be determined from the constituents in the flue gas. These constituents are normally carbon dioxide, CO_2, oxygen, O_2, and nitrogen, N_2. The nitrogen content is determined by difference, and all constituents are determined on a dry, volumetric, percentage basis. The volume fraction of each gas is multiplied by its respective molecular weight (MW) to determine the molecular weight fraction. The sum of the MW fractions is equal to the dry flue gas MW.

Example:

Gas	% by Vol.		MW	MW Fraction	
CO_2	13.5	x	44.01/100	5.94	
O_2	5.2	x	32.00/100	1.66	
N_2	81.3	x	28.02/100	22.76	
				30.36	Avg. MW of dry flue gas

The dry gas density, ρ_{dg}, is found by dividing the flue gas MW by the volume occupied by one mole of gas at the condition desired. One pound-mole will occupy 359.05 cu. ft at 32°F and 29.92 in. mercury.

$$\text{Density} = \frac{30.36 \text{ lb/lb-mole}}{359.05 \text{ ft}^3\text{/lb-mole}} = 0.0846 \frac{\text{lb}}{\text{ft}^3} \text{ @ } 32°\text{F},$$

$$29.92 \text{ in. Hg}$$

To adjust the density to any other temperature, T, and pressure, P, the previously calculated density is multiplied by the absolute pressure and temperature ratios.

Density at desired conditions equals density at standard conditions, multiplied by the temperature and pressure correction factors below.

$$\frac{(32°\text{F} + 459.76°\text{F})}{(T + 459.76°\text{F})} \text{ and } \frac{P \text{ in. Hg}}{29.92 \text{ in. Hg}}$$

7.2.8.1.2 Moisture in Flue Gas. The moisture content of flue gas can be calculated from the fuel analysis and combustion air moisture content, hygrometer wet-bulb and dry-bulb temperatures, or condensation of vapor from a known gas volume. Refer to PTC 4.1, Section 7, for the combustion method of moisture determination and I&A, PTC 19.18, for the hygrometer method of moisture determination.

7.2.8.1.3 Density of Wet Flue Gas. When the moisture in the flue gas has been determined, the percent CO_2, O_2, and N_2 on a dry basis is adjusted to a wet basis. This is done by multiplying $\left(1 - \frac{\% H_2O}{100}\right)$ times the dry gas percentage of CO_2, O_2, and N_2. Assume that moisture content is 8.8 percent water vapor by volume.

Gas	% by Vol. Dry			% by Vol. Wet	MW	MW Fraction	
CO_2	13.5	x	$\left(1 - \frac{8.8}{100}\right)$	12.3	x $\frac{44.01}{100}$	5.41	
O_2	5.2	x	0.912	4.7	x $\frac{32.00}{100}$	1.50	
N_2	81.3	x	0.912	74.2	x $\frac{28.02}{100}$	20.78	
H_2O	0.0			8.8	x $\frac{18.00}{100}$	1.58	
	100.0			100.0		29.27	Avg. MW of wet gas

Copyright ASME International
Provided by IHS under license with ASME
No reproduction or networking permitted without license from IHS
Not for Resale

VISCOSITY OF GASES

Gas or Vapor	Temp., °C	Viscosity Micro-poises	Gas or Vapor	Temp., °C	Viscosity Micro-poises
Air	-194.2	55.1	Carbon dioxide	-97.8	89.6
	-183.1	62.7		-78.2	97.2
	-104.0	113.0		-60.0	106.1
	-69.4	133.3		-40.2	115.5
	-31.6	153.9		-21	126.0
	0	170.8		-19.4	129.4
	18	182.7		0	139.0
	40	190.4		15	145.7
	54	195.8		19	148.0
	74	210.2		20	149.9
	229	263.8		30	153
	334	312.3		32	155
	357	317.5		35	156
	409	341.3		40	157
	466	350.1		99.1	186.1
	481	358.3		104	188.9
	537	368.6		182.4	222.1
	565	375.0		235	241.5
	620	391.6		302.0	268.2
	638	401.4		490	330.0
	750	426.3		685	380.0
	810	441.9		850	435.8
	923	464.3		1052	478.6
	1034	490.6	Oxygen	0	189
	1134	520.6		19.1	201.8
Nitrogen	-21.5	156.3		127.7	256.8
	10.9	170.7		227.0	301.7
	27.4	178.1		283	323.3
	127.2	219.1		402	369.3
	226.7	255.9		496	401.3
	299	279.7		608	437.0
	490	337.4		690	461.2
	825	419.2		829	501.2

$°F = (°C \times 9/5) + 32$

Viscosity: $\frac{lbm}{ft\text{-}sec}$ = micropoises x 6.72×10^{-8}

Source: Handbook of Chemistry and Physics, 57th Edition (1976-1977), pp. F-50, F-58, F-60.

FIG. 7.2.8

Copyright ASME International
Provided by IHS under license with ASME
No reproduction or networking permitted without license from IHS
Not for Resale

The wet flue gas density, ρ_{wg}, is found by dividing the MW by the volume of one pound-mole at the conditions desired.

$$\rho_{wg} = \frac{29.27 \text{ lb/lb-mole}}{359.05 \text{ ft}^3\text{/lb-mole}} = 0.0815 \frac{\text{lbm}}{\text{ft}^3}$$

@ 32°F, 29.92 in. Hg

7.2.8.1.4 Viscosity of Wet Flue Gas. The composite viscosity of the gas mixture is calculated using the following equation:

$$\mu_m = \frac{\Sigma y_i \mu_i \sqrt{MW_i}}{\Sigma y_i \sqrt{MW_i}} \quad *$$

Where

μ_m = Gas viscosity of mixture, lbm/ft-sec
y_i = Mole fraction of gas constituent
MW_i = Molecular weight of gas constituent
μ_i = Gas viscosity of individual constituent, lbm/ft-sec

Constituent	MW Fraction			Mole-Fraction	MW
CO_2	5.41	÷	29.27	0.185	44.01
O_2	1.5	÷	29.27	0.051	32.00
N_2	20.78	÷	29.27	0.710	28.02
H_2O	1.58	÷	29.27	0.054	18.00
	29.27			1.000	

Example:

Assume gas temperature = 300°F

Const.	Mole-Frac. y	μ, @ 300°F*	$\sqrt{MW}$	$y\sqrt{MW}$	$\mu y\sqrt{MW}$
CO_2	0.185	13.75×10^{-6}	6.63	1.227	16.87×10^{-6}
O_2	0.051	18.0×10^{-6}	5.66	0.289	5.20×10^{-6}
N_2	0.710	15.5×10^{-6}	5.29	3.756	58.22×10^{-6}
H_2O	0.054	9.5×10^{-6}	4.24	0.229	2.18×10^{-6}
	1.000			$\Sigma y_i \sqrt{MW_i} = 5.501$	
				$\Sigma \mu_i y_i \sqrt{MW_i} = 82.47 \times 10^{-6}$	

*See Fig. 7.2.7

Then:

$$\mu_m = \frac{\Sigma \mu_i y_i \sqrt{MW_i}}{\Sigma y_i \sqrt{MW_i}} = \frac{82.47 \times 10^{-6}}{5.501} =$$

14.99×10^{-6} lbm/ft-sec

*Perry's Chemical Engineer's Handbook, 5th Edition, p. 3-249, equation 3-135.

7.2.8.2 Computation of Average Gas Velocity

7.2.8.2.1 Pitot Static Tube. When velocity pressure measurements are made with this probe, the average velocity head shall be computed as follows:

$$P_v(\text{avg}) = \left[\frac{1}{N} \sum_{i=1}^{N} \sqrt{P_{vi}}\right]^2$$

$P_v(\text{avg})$ = Average velocity pressure, in. H_2O
N = Total number of traverse points

The average velocity shall be computed as follows:

$$V_{\text{avg}} = 1096.84 \sqrt{\frac{P_v(\text{avg})}{\rho_{wg}}}$$

Where

V_{avg} = Average gas velocity, ft/min
$P_v(\text{avg})$ = Derived as above
ρ_{wg} = Density of gas mixture at traverse plane, lbm/ft^3, see paragraph 7.2.8.1.3

7.2.8.2.2 Directional Probe. When velocity pressure measurements are made with this probe, the average velocity head must account for both the yaw angle and probe calibration factor.

(a) Yaw angle is measured as shown by the following diagram:

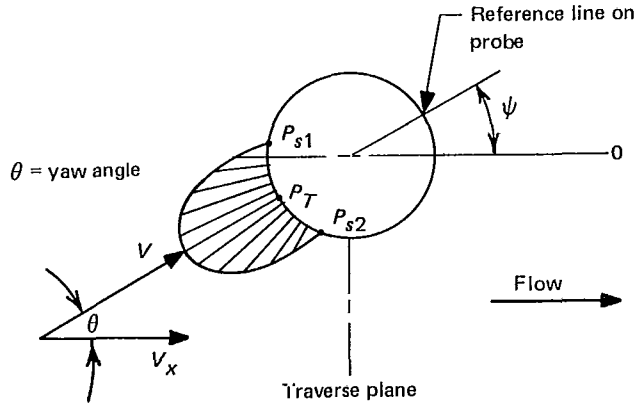

$P_{S1} = P_{S2}$ When probe nulled
$\theta = \psi$ Angle which probe must be rotated to obtain null – yaw angle, degrees
$P_V = P_T - P_{S1}$ Indicated velocity pressure

(b) The applicable probe factor *(K)* shall be selected, from the calibration curve, as the dependent variable of the average probe Reynolds number which shall be calculated as follows:

$$N_{\text{Re(avg)}} = 18.28 \sqrt{P_v(\text{avg})\, \rho_{wg}} \frac{D}{\mu_m}$$

Copyright ASME International
Provided by IHS under license with ASME
No reproduction or networking permitted without license from IHS
Not for Resale

Where: At test conditions

$N_{Re(avg)}$ = Average probe Reynolds number, dimensionless
ρ_{wg} = Average gas density at traverse plane, lbm/ft^3. See para. 7.2.8.1.3
D = Probe diameter, ft
μ_m = Composite viscosity of gas mixture, lbm/ft-sec. See para. 7.2.8.1.4

and

$$P_{V(avg)} = \left[\frac{1}{N}\sum_{i=1}^{N}\sqrt{P_{Vi}}\right]^2$$

Where

P_{Vi} = Indicated velocity head, in. H_2O, at each point i

Note: Yaw angle correction is not required for this step.

The average yaw angle corrected velocity head shall be derived as follows:

$$P'_{V(avg)} = \left[\frac{1}{N}\sum_{i=1}^{N}\sqrt{P_{Vi}}\cos\theta_i\right]^2$$

Where

P_{Vi} = Indicated velocity head, in. H_2O at each point i
θ_i = Yaw angle, degrees, at each point i

The average velocity is calculated as follows:

$$V_{avg} = 1096.84\sqrt{\frac{K\,P'_{V(avg)}}{\rho_{wg}}}$$

Where

V_{avg} = Average gas velocity, ft/min
K = Probe factor, dimensionless. See para. 7.2.8.2.2(b)
$P'_{V(avg)}$ = Average velocity head corrected for yaw, in. H_2O
ρ_{wg} = Gas density at traverse plane, lbm/ft^3

7.2.8.3 Calculation of Total Flow

7.2.8.3.1 Volumetric Flow. The total volumetric flow is determined as follows:

$$Q = A\,V_{avg}$$

Where

Q = Volumetric flow at test conditions, acfm
A = Total area traversed, ft^2
V_{avg} = Average velocity, ft/min

7.2.8.3.2 Mass Flow. The total mass flow is determined as follows:

$$M = A\,V_{avg}\,\rho_{wg} = Q\,\rho_{wg}$$

where

M = Mass flow, lbm/min
ρ_{wg} = Gas density at test conditions, lbm/ft^3

Sample Problem:

Figure 7.2.11 is a sample data sheet showing the results of a 24-point transverse.

Column	Explanation
A	Sample point identification
B	Identifies a term within summation
C	Gas temperatures, °F
D	Total pressure, in. H_2O, i.e., velocity + static
E	Velocity pressure, in. H_2O
F	Yaw angle, degrees
G	Yaw angle corrected velocity head, in. H_2O

The appropriate average values of each measurement are shown at the bottoms of Columns C through G.

The first step is to calculate the composite gas viscosity, μ.

Const.	% by Vol. Dry		% by Vol. Wet		MW	MW Fract.
CO_2	12.5	$\times\left(1-\frac{6.0}{100}\right)$	11.75	×	44.01/100	5.17
O_2	3.0	$\times\left(1-\frac{6.0}{100}\right)$	2.82	×	32.00/100	0.90
N_2	84.5	$\times\left(1-\frac{6.0}{100}\right)$	79.43	×	28.02/100	22.26
H_2O	0.0		6.00	×	18.00/100	1.08
	100.0		100.00			29.41

Const.	MW Fraction			Mole-Fract. y
CO_2	5.17	÷	29.41	0.18
O_2	0.90	÷	29.41	0.03
N_2	22.26	÷	29.41	0.76
H_2O	1.80	÷	29.41	0.04
	29.41			1.0

Const.	Mole-Fract. y	μ @ 275°F*	MW	$y\sqrt{MW}$	$\mu y\sqrt{MW}$
CO_2	0.18	13.5×10^{-6}	44.01	1.19	16.12×10^{-6}
O_2	0.03	17.5×10^{-6}	32.00	0.17	2.97×10^{-6}
N_2	0.76	15.0×10^{-6}	28.02	4.02	60.34×10^{-6}
H_2O	0.04	9.5×10^{-6}	18.00	0.17	1.61×10^{-6}
	1.0		Σ =	5.55	Σ = 81.04×10^{-6}

$$\mu = \text{viscosity of gas mixture} = \frac{\Sigma\mu y\sqrt{MW}}{\Sigma y\sqrt{MW}} = \frac{81.04\times10^{-6}}{5.55} = 14.6\times10^{-6}\ \frac{\text{lbm}}{\text{ft-sec}}$$

*Values taken from Fig. 7.2.7.

Copyright ASME International
Provided by IHS under license with ASME
No reproduction or networking permitted without license from IHS
Not for Resale

Probe Reynolds number = $N_{Re} = 18.27 \sqrt{P_v \rho} \frac{D}{\mu}$

Where

Probe is 1.0 in. $\emptyset$ = 1.0/12 = 0.083 ft $\emptyset$

P_v = Average velocity pressure from Column E = 2.24 in. H_2O

$$N_{Re} = \frac{18.28 \times 0.083 \times \sqrt{2.24} \times \sqrt{\rho}}{14.6 \times 10^{-6}} \quad (1)$$

$$N_{Re} = 1.56 \times 10^5 \sqrt{\rho}$$

Wet flue gas density at the traverse plane is calculated as follows:

$$\rho = \frac{29.41 \text{ lb/lb-mole}}{359.05 \text{ ft}^3\text{/lb-mole}} \times \frac{460+32}{460+T} \times \frac{29.92 + \left(\frac{P_T}{13.6} - \frac{K P_v}{13.6}\right)}{29.92}$$

Where

T = 275°F – average temperature from Column C

P_T = 4.28 in. H_2O – average total pressure from Column D

K = Probe coefficient, dimensionless

P_v = 2.28 in. H_2O – average velocity pressure from Column E.

Note: Since we need average pressure this value is a straight arithmetic mean instead of the squared value of the mean of the square roots of velocity pressure.

Substituting the appropriate values:

$$\rho = \frac{29.41}{359.05} \times \frac{460+32}{460+275} \times \frac{29.92 + \left(\frac{4.28}{13.6} - K\frac{2.28}{13.6}\right)}{29.92}, \quad \text{lbm/ft}^3 \quad (2)$$

$$\rho = 0.082 \times 0.669 \times (1 + 0.011 - 0.006\,K)$$

$$\rho = 0.055 - 0.0003\,K \ \ldots\ldots$$

Note that the probe factor, K, depends on the probe Reynolds number; however, the Reynolds number is a function of gas density which is dependent on K as well. This is so because of the method used to determine the average static pressure in the gas stream, i.e., $P_{static} = P_{total} - K\,P_{velocity\ head}$. Since K cannot be explicitly determined, a trial and error method of solution is required.

This is accomplished by substituting the expression for ρ, equation (2), in the expression for the probe Reynolds number, equation (1).

Hence:

$$N_{Re} = 1.56 \times 10^5 \sqrt{(550 - 3K)10^{-4}}$$

or (3)

$$N_{Re} = 1.56 \times 10^3 \sqrt{550 - 3K}$$

The trial and error solution proceeds by choosing values for N_{Re} and the corresponding K-value. Successive substitutions are made into equation (3) until equality is achieved.

Assume:

$N_{Re} = 3.0 \times 10^4$, then $K = 1.195$ from calibration curve, Fig. 7.2.10

$3.0 \times 10^4 = 1.56 \times 10^3 \sqrt{550 - 3(1.195)}$

$3.0 \times 10^4 < 3.62 \times 10^4$

Assume:

$N_{Re} = 3.6 \times 10^4$, then $K = 1.19$ from Fig. 7.2.9

$3.6 \times 10^4 = 1.56 \times 10^3 \sqrt{550 - 3(1.19)}$

$3.6 \times 10^4 = 3.6 \times 10^4$

Note: If a Pitot tube was used to measure velocity head, this step would be unnecessary since K would equal 1.0.

Substituting for K into equation (2) the wet gas density becomes:

$$\rho = 0.055 - 0.0003 \times 1.19$$

$$= 0.055 \frac{\text{lbm}}{\text{ft}^3} \text{ @ test conditions}$$

Gas velocity:

$$V = 1096.84 \sqrt{\frac{P_v}{\rho}}$$

where

P_v = 1.86 in. H_2O – The average yaw corrected velocity head from Column G

ρ = wet gas density, lbm/ft^3

Hence:

$$V = 1096.84 \sqrt{\frac{1.86}{0.055}} = 6378 \text{ fpm}$$

Volume flow:

$$Q = A\,V = 150 \times 6378 = 956{,}775 \text{ acfm}$$

Mass flow:

$$m = Q \times \rho = 150 \times 6378 \times 0.055 = 52{,}623 \text{ lbm/min}$$

Copyright ASME International
Provided by IHS under license with ASME
No reproduction or networking permitted without license from IHS
Not for Resale

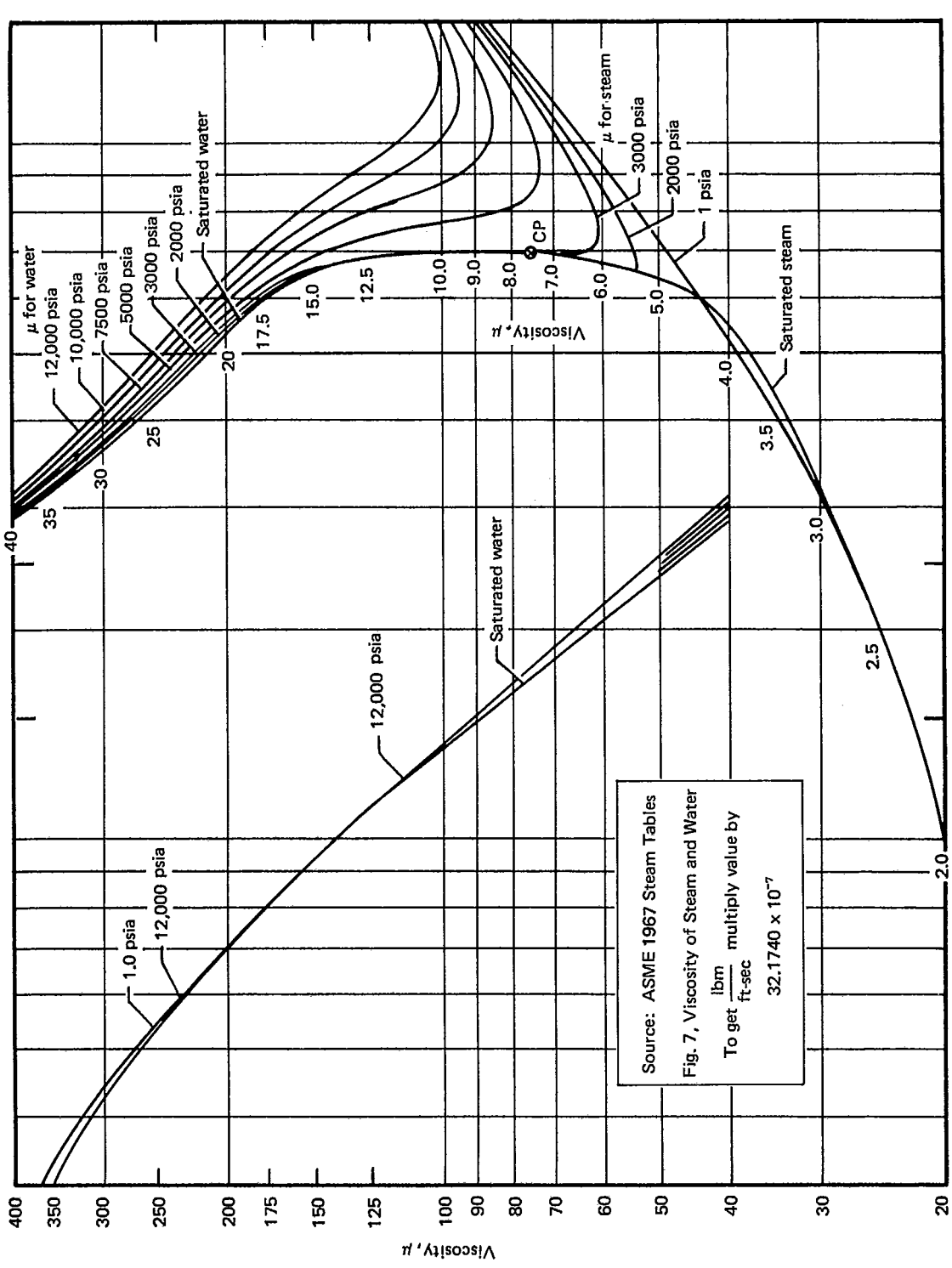

FIG. 7.2.9

Copyright ASME International
Provided by IHS under license with ASME
No reproduction or networking permitted without license from IHS

Not for Resale

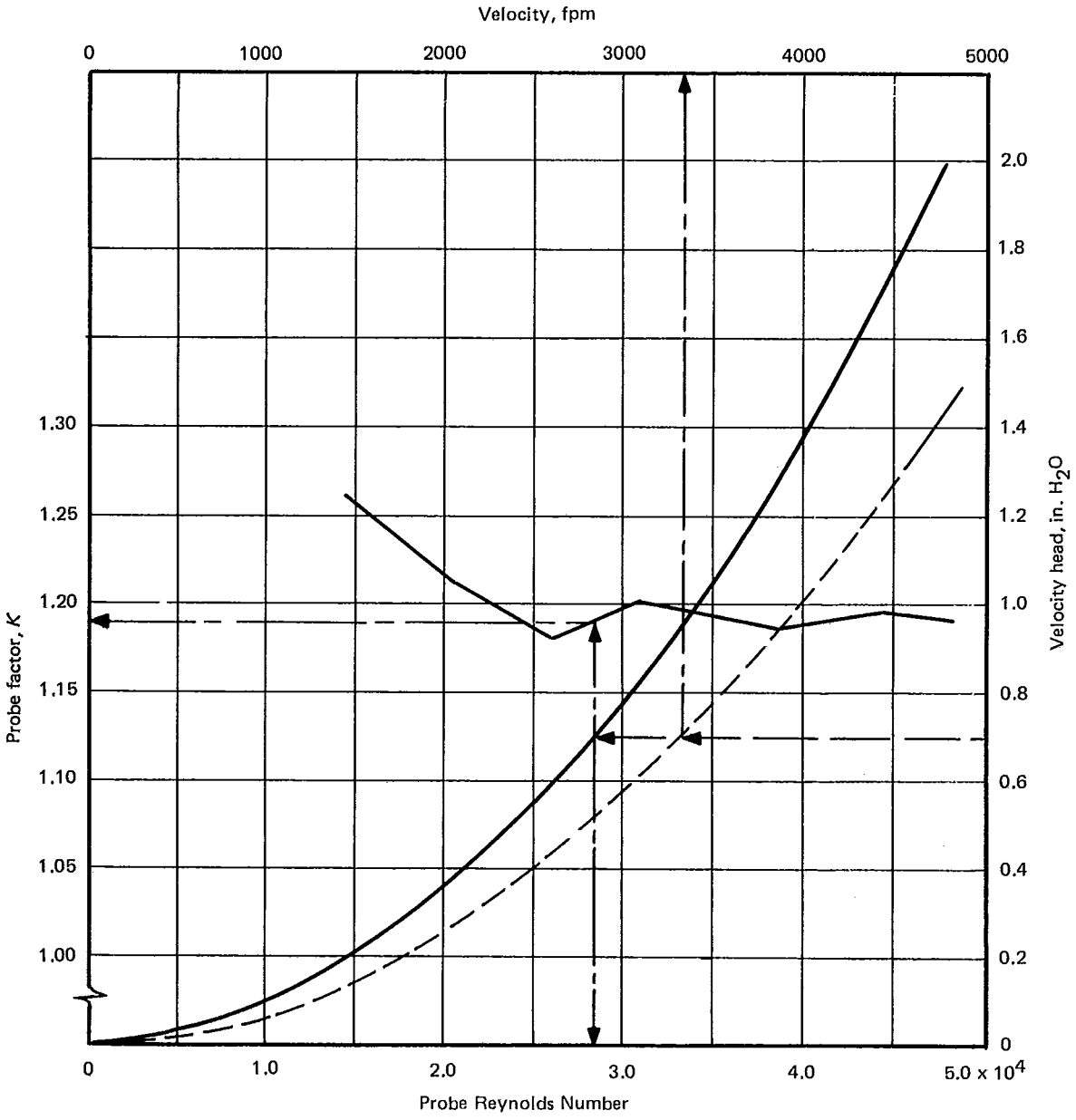

FIG. 7.2.10 SAMPLE CALIBRATION CURVE BASED ON AIR AT 70°F, 29.92 in. Hg

Copyright ASME International
Provided by IHS under license with ASME
No reproduction or networking permitted without license from IHS
Not for Resale

A Point	B i	C Temp., °F	D P_T-in. H_2O	E P_V-in. H_2O	F Yaw-deg	G yaw* P_V-corr
A1	1	275	3.30	1.30	-40	0.76
2	2	270	3.75	1.75	-45	0.87
3	3	276	4.00	2.00	-45	1.00
4	4	274	4.11	2.11	-45	1.05
5	5	278	4.64	2.64	0	2.64
6	6	273	3.91	1.91	-30	1.43
B1	7	280	4.12	2.12	-30	1.59
2	8	271	4.17	2.17	-32	1.56
3	9	273	4.45	2.45	+10	2.38
4	10	275	5.63	3.63	-38	2.25
5	11	277	4.41	2.41	-30	1.81
6	12	279	5.43	3.43	-15	3.20
C1	13	274	4.99	2.99	-10	2.90
2	14	272	5.11	3.11	-5	3.09
3	15	273	4.65	2.65	-16	2.45
4	16	277	4.74	2.74	-15	2.56
5	17	278	4.30	2.30	-8	2.26
6	18	280	4.21	2.21	-5	2.19
D1	19	273	3.67	1.69	-9	1.65
2	20	280	3.44	1.44	-14	1.36
3	21	281	3.20	1.20	-20	1.06
4	22	276	3.72	1.72	-20	1.52
5	23	275	4.41	2.41	-5	2.39
6	24	272	4.40	2.40	0	2.40

$$\frac{1}{24}\sum_{i=1}^{24} T_i = 276$$

$$\frac{1}{24}\sum_{i=1}^{24} P_i = \overline{4.28}$$

$$\left(\frac{1}{24}\sum_{i=1}^{24}\sqrt{P_{Vi}}\right)^2 = \overline{2.24}$$

$$\frac{1}{24}\sum_{i=1}^{24} P_{Vi} = 2.28$$

$$\left(\frac{1}{24}\sum_{i=1}^{N}\sqrt{P_{Vi}\cos^2\theta_i}\right)^2 = \overline{1.86}$$

ORSAT ANALYSIS

Percent by Vol. Dry	
CO_2	12.5
O_2	3.0
N_2	84.5
	100.0

Moisture 6.0% by volume

Barometer = 29.10 in. Hg

Duct Area = 150 ft²

*P_V-yaw corr = $P_V \cos^2\theta$

FIG. 7.2.11 SAMPLE DATA SHEET FOR A 24-POINT TRAVERSE

Copyright ASME International
Provided by IHS under license with ASME
No reproduction or networking permitted without license from IHS

Not for Resale

7.3 COMPUTER PROGRAM FOR CALCULATING EXHAUST GAS ENTHALPY

7.3.1 Program Scope

This section gives details of a computer program that will calculate exhaust gas enthalpy based upon a method combining the incremental enthalpies of the products of combustion. This program can be used to calculate a specific enthalpy or a table of enthalpies for a range of given conditions. The program has five routines, controlled by an input index (IPO) as follows:

Index 1. Calculates for a given fuel, a table of exhaust gas enthalpies for a range of gas temperatures from 100°F to 2000°F in 50°F increments and for a range of fuel-air ratios from 0.015 to 0.060 in 0.005 increments. This fuel-air ratio range is equivalent to an approximate excess air range of 10 percent to 400 percent.

Index 2. Calculates for a given fuel, a table of gas temperatures for a range of exhaust gas enthalpies from 130 Btu/lb to 500 Btu/lb in 10 Btu/lb increments and for the same fuel-air ratio range as Index 1.

Index 3. Calculates for a given fuel, the individual exhaust gas enthalpy at one gas temperature and fuel-air ratio.

Index 4. Calculates for a given fuel, the individual gas temperature at one exhaust gas enthalpy and fuel-air ratio.

Index 5. Calculates for a given fuel, the incremental and total enthalpies of combustion products.

The range of properties stated above for routines 1 and 2 can be altered in the program by changing the limits in lines 35, 36, 44, 48, 49, and 59 (see program listing in paragraph 7.3.3). The increments can be altered by changing the constant in lines 39, 43, 52, 55, 61, and 63.

7.3.2 Nomenclature for Variables

Symbol	Description	Units
GASENT	Program name	Gas enthalpy
ENTHAL	Subroutine name	Enthalpy
FGR	Gas turbine fuel-air ratio	Decimal
FL	Fuel type description	Alpha numeric
FSR	Supplementary firing fuel-gas ratio	Decimal
HAD	Component enthalpy of dry air	Btu/lb
HCB	Component enthalpy of carbon	Btu/lb
HCD	Component enthalpy of carbon dioxide	Btu/lb
HCM	Component enthalpy of carbon monoxide	Btu/lb
HCO	Enthalpy of carbon at a given temperature	Btu/lb
HGF	Initial exhaust gas enthalpy	Btu/lb
HGT	Calculated exhaust gas enthalpy	Btu/lb
HHY	Component enthalpy of hydrogen	Btu/lb
HIA	Enthalpy of air at a given temperature	Btu/lb
HIC	Incremental enthalpy of carbon	Btu/lb
HIH	Incremental enthalpy of hydrogen	Btu/lb
HIM	Enthalpy of moisture at a given temperature	Btu/lb
HIS	Incremental enthalpy of sulfur	Btu/lb
HMO	Component enthalpy of moisture	Btu/lb

Copyright ASME International
Provided by IHS under license with ASME
No reproduction or networking permitted without license from IHS
Not for Resale

Symbol	Description	Units
HNC	Total component enthalpies of noncombustibles	Btu/lb
HNI	Component enthalpy of nitrogen	Btu/lb
HNO	Enthalpy of nitrogen at a given temperature	Btu/lb
HOM	Enthalpy of carbon monoxide at a given temperature	Btu/lb
HOX	Enthalpy of oxygen at a given temperature	Btu/lb
HOY	Component enthalpy of oxygen	Btu/lb
HSD	Component enthalpy of sulfur dioxide	Btu/lb
HSO	Enthalpy of sulfur at a given temperature	Btu/lb
HSU	Component enthalpy of sulfur	Btu/lb
IPO	Program printout index	
J	Program loop index	
N	Program loop index	
PCF	Percent carbon in fuel	percent
PDF	Percent carbon dioxide in fuel	percent
PHF	Percent hydrogen in fuel	percent
PIA	Barometric pressure	psia
PIH	Barometric pressure	in. Hg
PMF	Percent carbon monoxide in fuel	percent
PNC	Percent noncombustibles in fuel	percent
PNF	Percent nitrogen in fuel	percent
POF	Percent oxygen in fuel	percent
PSF	Percent sulfur in fuel	percent
PUF	Percent sulfur dioxide in fuel	percent
RAK	Absolute temperature	Deg. R
RHY	Relative humidity	percent
RTG	Initial exhaust gas temperature	Deg. F
TAD	Ambient dry bulb temperature	Deg. F
TAW	Ambient wet bulb temperature	Deg. F
TGF	Exhaust gas temperature	Deg. F
TGT	Initial exhaust gas temperature	Deg. F
VAP	Function for vapor pressure of water at a given temperature*	in. Hg
VPD	Vapor pressure of water at dry ambient	in. Hg
VPV	Vapor pressure of water (corrected)	in. Hg
VPW	Vapor pressure of water at wet ambient	in. Hg
WAG	Component weight of dry air	lb/lb exhaust gas
WCG	Component weight of carbon	lb/lb exhaust gas
WDA	Weight of dry air (base = 1.0)	lb
WDF	Component weight of carbon dioxide	lb/lb exhaust gas
WFE	Component weight of fuel	lb/lb exhaust gas
WFG	Weight of gas turbine fuel	lb/lb air
WFS	Weight of supplementary fuel	lb/lb exhaust gas
WHG	Component weight of hydrogen	lb/lb exhaust gas
WMA	Weight of ambient moisture	lb/lb air
WMF	Component weight of carbon monoxide	lb/lb exhaust gas
WMG	Component weight of moisture	lb/lb exhaust gas
WMJ	Weight of injection moisture	lb/lb air
WNC	Total component weights of noncombustibles	lb/lb exhaust gas
WNF	Component weight of nitrogen	lb/lb exhaust gas
WOF	Component weight of oxygen	lb/lb exhaust gas

*Mark's Standard Handbook for Mechanical Engineers, Seventh Edition, p. 4-81.

Copyright ASME International
Provided by IHS under license with ASME
No reproduction or networking permitted without license from IHS
Not for Resale

Symbol	Description	Units
WSU	Component weight of sulfur	lb/lb exhaust gas
WTG	Weight of exhaust products	lb
WTP	Total of exhaust component weights	lb
WUF	Component weight of sulfur dioxide	lb/lb exhaust gas
XA	Project description	Alpha numeric
XB	Description of run	Alpha numeric

7.3.3 Input Data

The input consists of five lines of data entered in fixed format as follows:

```
XA (I), I = 1, 10
XB (I), I = 1, 10
FL (I), I = 1,  2
TAD, TAW, PIA, PIH, RHY, IPO
TGT (1), HGF (1), FGR (1), FSR (1), WMJ
PCF, PHF, PSF, POF, PNF, PDF, PMF, PUF
```

Definition of the variable names is given in paragraph 7.3.2.

Example:

```
TEST RUN FOR ASME PTC 4.4  JJZ
EXHAUST GAS ENTHALPY = ISO CONDITIONS,  IPO=1
NO.2 OIL
 59.0   0.0 14.696   0.0 60.00  1
 100.    0.0 0.01500 0.0     0.0
 87.50  12.00   0.50   0.0    0.0    0.0    0.0    0.0
```


Copyright ASME International
Provided by IHS under license with ASME
No reproduction or networking permitted without license from IHS
Not for Resale

PROGRAM LISTING (FORTRAN IV)

```
      C       PROGRAM GASENT(INPUT,OUTPUT,TAPE5)
      C       CALCULATES EXHAUST GAS ENTHALPY OR TEMPERATURE
      C       GIVEN AMBIENT CONDITIONS AND FUEL-AIR RATIO
0001          COMMON XA(15),XB(15),FL(5),TGT(49),FGR(11),HGT(49),HGF(49),HPT,
             1HSP,TGF(49,10),WFG,WMA,WTG,WDA,WAG,WMG,WFE,WCG,PCF,PHF,HIA,RAK,
             2HCO,HIM,HOX,HIC,HIH,HAD,HMO,HCB,HHY,WTP,N,J,WHG,IPO,WOC,WOH,WOS,
             3WPO,WCX,FSR(11),WFS,WMJ,WSU,PSF,HIS,HSU,HSO,WSX,WHX,WPH,WPT,HOP,
             4HCP,HMP,PDF,PMF,PNF,POF,PUF,PNC,WOF,WNF,WDF,WUF,WNC,HNC
      C       CALL PFUR(3HRET,5,TAPE5)
0002             VAP(XX)=3.7704E-02+1.63297E-03*(XX)+8.87809E-05*(XX)**2
             1-4.92541E-07*(XX)**3+1.33683E-08*(XX)**4
0003          READ(5,2) (XA(I),I=1,15)
0004          READ(5,2) (XB(I),I=1,15)
0005          READ(5,3) (FL(I),I=1,5)
0006          READ(5,4)  TAD, TAW,PIA,PIH,RHY,IPO
0007          READ(5,6)  TGT(1),HGF(1),FGR(1),FSR(1),WMJ
0008          READ(5,7)  PCF,PHF,PSF,POF,PNF,PDF,PMF,PUF
0009          WRITE(6,2) (XA(I),I=1,15)
0010          WRITE(6,2) (XB(I),I=1,15)
0011          WRITE(6,3) (FL(I),I=1,5)
0012          WRITE(6,4) TAD,TAW,PIA,PIH,RHY,IPO
0013          WRITE(6,6) TGT(1),HGF(1),FGR(1),FSR(1),WMJ
0014          WRITE(6,7) PCF,PHF,PSF,POF,PNF,PDF,PMF,PUF
0015          PNC=PDF+PMF+POF+PUF+PNF
0016          WRITE(6,9)
0017          IF(IPO.GE.3) WRITE(6,8)(XA(I),I=1,15),(XB(I),I=1,15),(FL(I),I=1,5)
             1 ,PCF,PSF,PHF,PNC
0018          IF(IPO.EQ.3) WRITE(6,10)
0019          IF(IPO.EQ.4) WRITE(6,12)
0020          IF(IPO.EQ.1) WRITE(6,14) (FL(I),I=1,5),PCF,TAD,PHF,RHY,PSF,PIA,PNC
0021          IF(IPO.EQ.2) WRITE(6,16) (FL(I),I=1,5),PCF,TAD,PHF,RHY,PSF,PIA,PNC
0022       90 IF(PIA.GT.0.) PIH=PIA*2.036
0023          VPD=VAP(TAD)
0024          IF(RHY.GT.0.) GO TO 20
0025          VPW=VAP(TAW)
0026          VPV=VPW-(PIH*(TAD-TAW)/2700.)
0027          RHY=VPV/VPD
0028          GO TO 22
0029       20 VPV=RHY*VPD/100.
0030       22 WMA=VPV/(1.61*(PIH-VPV))
0031          WDA=1.0
0032          RTG=TGT(1)
0033          IF (IPO.EQ.5) GO TO 91
0034          IF(IPO.EQ.2.OR.IPO.EQ.4) GO TO 50
0035          DO 30 N=1,39
0036          DO 32 J=1,10
0037          CALL ENTHAL
0038          IF(IPO.EQ.3) GO TO 60
0039          FGR(J+1)=FGR(J)+.005
0040          IF(J.EQ.10) GO TO 66
0041          GO TO 32
```


Copyright ASME International
Provided by IHS under license with ASME
No reproduction or networking permitted without license from IHS
Not for Resale

```
0042     66 WRITE(6,80) TGT(N),(HGT(K),K=1,10)
0043        TGT(N+1)=TGT(N)+50.
0044        IF(N.EQ.39) GO TO 99
0045        GO TO 30
0046     32 CONTINUE
0047     30 CONTINUE
0048     50 DO 42 J=1,10
0049        DO 40 N=1,39
0050    112 CALL ENTHAL
0051        IF(HGF(N).LT.HGT(N)) GO TO 110
0052        TGT(N)=TGT(N)+.5
0053        GO TO 112
0054    110 IF(ABS(HGF(N)-HGT(N)).LT.0.5) GO TO 114
0055        TGT(N)=TGT(N)-.2
0056        GO TO 112
0057    114 TGF(N,J)=TGT(N)
0058        IF(IPO.EQ.4) GO TO 70
0059        IF(N.EQ.39) GO TO 116
0060        TGT(N+1)=TGT(N)
0061        HGF(N+1)=HGF(N)+10.
0062        GO TO 40
0063    116 FGR(J+1)=FGR(J)+.005
0064        TGT(1)=RTG
0065        GO TO 42
0066     40 CONTINUE
0067     42 CONTINUE
0068        DO 118 N=1,39
0069        WRITE(6,82) HGF(N),(TGF(N,J),J=1,10)
0070        IF(N.EQ.48) GO TO 99
0071    118 CONTINUE
0072     60 WRITE(6,62) TGT(1),WAG,HIA,HAD,WMG,HIM,HMO,WCG,HIC,HCB,WHG,HIH,
           1HHY,WSU,HIS,HSU,WTP,HGT(J)
0073     74 READ(5,*,END=99) TGT(1),HGF(1)
0074        IF(TGT(1).EQ.0.) GO TO 99
0075        GO TO 90
0076     70 WRITE(6,72) HGF(N),TGF(N,J),FGR(J)
0077        GO TO 74
0078     91 J=1
0079        N=1
0080        CALL ENTHAL
0081        WRITE(6,92)  WAG,WAG,WMG,WMG,WCG,WOC,WCX,WHG,WOH,WHX,WSU,WOS,WSX,
           1WNC,WTP,WAG,WPO,WCX,WSX,WPH,WNC,HIA,HOX,HCO,HSO,HIM,HPT,HAD,HOP,
           2HCP,HSP,HMP,HNC
0082        GO TO 74
0083      2 FORMAT(15A4)
0084      3 FORMAT(5A4)
0085      4 FORMAT(2F6.1,F7.3,F7.2,F5.2,I3)
0086      9 FORMAT(75('-'))
0087      6 FORMAT(F6.0,F7.1,3F8.5)
0088      7 FORMAT(8F7.2)
0089      8 FORMAT(////   15A4/15A4/5A4//' CARBON   =',F6.2,' PERC.',4X
           1'SULFUR     =',F6.2,' PERC.'/' HYDROGEN =',F6.2,' PERC.',4X
           2'NON-COMB.  =',F6.2,' PERC.')
```


Copyright ASME International
Provided by IHS under license with ASME
No reproduction or networking permitted without license from IHS Not for Resale

```
0090      10 FORMAT(//' COMPONENT',9X,'PRODUCT',9X,'INCR.',9X,'PRODUCT'/
            120X,'WEIGHT',9X,'ENTHALPY',8X,'ENTHALPY'/20X,'PER LB',
            210X,'BTU/LB',9X,'BTU/LB'/)
0091      12 FORMAT (//,5X,'ENTHALPY  TEMPERATURE   FUEL-AIR'/
            16X,'BTU/LB',7X,'DEG.F',8X,'RATIO'/)
0092      14 FORMAT(//' GAS TURBINE EXHAUST ENTHALPY',10X,'CONSTANTS'/
            15X,'FUEL =',5A4, 9X,'TEMPERATURE DATUM  =0. DEG.R.'/
            26X,'CARBON   =',F5.2,'PERC.',16X,'DRY BULB (AMBIENT) = ',F3.0,
            3' DEG.F.'/6X,'HYDROGEN  =',F5.2,' PERC.',13X,'REL. HUMIDITY',6X,
            4'=',F3.0,' PERC.'/6X,'SULFUR   =',F5.2,' PERC.',15X,
            5'BAROMETRIC PRESS.  =',F7.3,'PSIA.'/6X,'NON-COMB. =',F6.2,
            6' PERC.'//' EXHAUST',10X,'ENTHALPY ABOVE ABSOLUTE ZERO',
            7' - BTU/LB'/'  TEMP.',15X,'GAS TURBINE FUEL-AIR RATIO'/
            8'  DEG.F.  .015   .020   .025   .030   .035   .040   .045   .050',
            9'   .055   .060'/)
0093      16 FORMAT(//'GAS TURBINE EXHAUST TEMPERATURE',7X,'CONSTANTS'/
            15X,'FUEL = ',3A4,17X,'TEMPERATURE DATUM = 0. DEG.R.'/
            26X,'CARBON =',F5.2,' PERC.',16X,'DRY BULB (AMBIENT) =',F3.0,
            3' DEG.F.'/6X,'HYDROGEN =',F5.2,' PERC.',14X,'REL. HUMIDITY',6X,
            4'=',F3.0,' PERC.'/6X,'SULFUR=',F5.2,'PERC.',17X,
            5' BAROMETRIC PRESS. =',F7.3,'PSIA.'/6X,'NON-COMB. =',F6.2,
            6' PERC.'//' EXHAUST',16X,'TEMPERATURE - DEG.F'/
            7'ENTHALPY',13X,'GAS TURBINE FUEL-AIR RATIO'/'BTU/LB   .015',
            8'   .020   .025   .030   .035   .040   .045',
            9'   .050   .055   .060'/)
0094      62 FORMAT(' TEMPERATURE' ,5X,F9.1,' DEG.F'//
            1' DRY AIR',9X,F9.5,2F15.2/' MOISTURE',8X,F9.5,2F15.2/
            2' CARBON IN FUEL  ',F9.5,2F15.2/' HYDROGEN IN FUEL',F9.5,2F15.2/
            3' SULFUR IN FUEL  ',F9.5,2F15.2/' NON-COMB. IN FUEL',F8.5,15X,
            4F15.2/'TOTALS',10X,F9.5,15X,F15.2//)
0095      72 FORMAT(1X,F10.1,F13.1,F12.4/)
0096      80 FORMAT(1X,F6.0,10F7.1)
0097      82 FORMAT(1X,F6.1,F8.1,9F7.1)
0098      92 FORMAT(//,19X,'TOTAL',8X,'C O M B.  P R O D U C T S',9X,
            1'NON-'/19X,' IN   DRY AIR',3X,'02',6X,'C02',5X,'S02',5X,'H20',4X,
            2'COMB.'//' DRY AIR',8X,2F8.4/' MOISTURE',7X,F8.4,32X,F8.4/
            3' FUEL CARBON    ',F8.4,8X,' (',F5.3,')',F8.4/' FUEL HYDROGEN  ',
            4F8.4,8X,' (',F5.3,')',16X,F8.4/' FUEL SULFUR    ',F8.4,9X,'(',
            5F5.3,')',8X,F8.4/' FUEL NON-COMB. ',F8.4/' WEIGHT - LB    ',
            62F8.4,' (',F5.3,'),4F8.4/
            7' INCR. ENTHALPY ',8X,5F8.2/' TOTAL ENTHALPY ',2F8.2,' (',F5.2,
            8')',4F8.2)
0099      99 STOP
0100         END
0001         SUBROUTINE ENTHAL
0002         COMMON XA(15),XB(15),FL(5),TGT(49),FGR(11),HGT(49),HGF(49),
            1HPT,HSP,TGF(49,10),WFG,WMA,WTG,WDA,WAG,WMG,WFE,WCG,PCF,PHF,HIA,
            2RAK,HCO,HIM,HOX,HIC,HIH,HAD,HMO,HCB,HHY,WTP,N,J,WHG,IPO,WOC,WOH,
            3WOS,WPO,WCX,FSR(11),WFS,WMJ,WSU,PSF,HIS,HSU,HSO,WSX,WHX,WPH,WPT,
            4HOP,HCP,HMP,PDF,PMF,PNF,POF,PUF,PNC,WOF,WNF,WDF,WUF,WNC,HNC
0003         WFG=(WDA+WMA)*FGR(J)
0004         WFS=(WDA+WMA+WMJ+WFG)*FSR(J)
0005         WTG=WDA+WMA+WFG+WFS+WMJ
```


Copyright ASME International
Provided by IHS under license with ASME
No reproduction or networking permitted without license from IHS
Not for Resale

```
0006          WAG=WDA/WTG
0007          WMG=(WMA+WMJ)/WTG
0008          WFE=(WFG+WFS)/WTG
0009          WCG=PCF*WFE/100.
0010          WHG=PHF*WFE/100.
0011          WSU=PSF*WFE/100.
0012          WOF=POF*WFE/100.
0013          WNF=PNF*WFE/100.
0014          WDF=PDF*WFE/100.
0015          WMF=PMF*WFE/100.
0016          WUF=PUF*WFE/100.
0017          WNC=WOF+WNF+WDF+WMF+WUF
0018          WTP=WAG+WMG+WCG+WHG+WSU+WNC
0019          RAK=TGT(N)+459.7
0020          HIA=-1.15203+2.47795E-01*RAK-2.33568E-05*RAK**2+
             12.38185E-08*RAK**3-6.79369E-12*RAK**4+6.82532E-16*RAK**5
0021          HCO=14.00137*RAK/100.+.67027*(RAK/100.)**2-.87505E-02*
             1(RAK/100.)**3-8.57364*(100./RAK)
0022          HIM=40.83193*RAK/100.+.36710*(RAK/100.)**2+.06160E-02*
             1(RAK/100.)**3+34.42356*100./RAK
0023          HOX=19.75583*RAK/100.+.24852*(RAK/100.)**2-.27109E-02*
             1(RAK/100.)**3+18.86205*100./RAK
0024          HSO=11.10611*(RAK/100.)+.42328*(RAK/100.)**2
             1-.60594E-2*(RAK/100.)**3+.67880*(100./RAK)
0025          HIC=(3.6644*HCO)-(2.6644*HOX)
0026          HIH=(8.937*HIM)-(7.937*HOX)
0027          HIS=(1.998*HSO)-(.998*HOX)
0028          HOM=23.39643*RAK/100.+.13848*(RAK/100.)**2-.0164E-2*(RAK/100.)
             1**3+18.89712*(100./RAK)
0029          HNO=23.69959*RAK/100.+.09764*(RAK/100.)**2+.05949E-2*(RAK/100.)
             1**3+15.60296*(100./RAK)
0030          HAD=WAG*HIA
0031          HMO=WMG*HIM
0032          HCB=WCG*HIC
0033          HHY=WHG*HIH
0034          HSU=WSU*HIS
0035          HOY=WOF*HOX
0036          HNI=WNF*HNO
0037          HCD=WDF*HCO
0038          HCM=WMF*HOM
0039          HSD=WUF*HSO
0040          HNC=HOY +HNI+HCD+HCM+HSD
0041          IF(IPO.EQ.5) GO TO 48
0042          IF(IPO.EQ.2.OR.IPO.EQ.4) GO TO 46
0043          HGT(J)=HAD+HMO+HCB+HHY+HSU+HNC
0044          GO TO 47
0045       46 HGT(N)=HAD+HMO+HCB+HHY+HSU+HNC
0046          GO TO 47
0047       48 WOC=2.6644*WCG
0048          WCX=3.6644*WCG
0049          WOH=7.937*WHG
0050          WHX=8.937*WHG
0051          WOS=.998*WSU
```


Copyright ASME International
Provided by IHS under license with ASME
No reproduction or networking permitted without license from IHS
Not for Resale

```
0052          WSX=1.998*WSU
0053          WPO=WOC+WOH+WOS
0054          WPH=WMG+WHX
0055          WPT=WAG+WCX+WSX+WPH+WNC-WPO
0056          HOP=WPO*HOX
0057          HCP=WCX*HCO
0058          HSP=WSX*HSO
0059          HMP=WPH*HIM
0060          HPT=HAD+HCP+HSP+HMP+HNC-HOP
0061       47 RETURN
0062          END
```


Copyright ASME International
Provided by IHS under license with ASME
No reproduction or networking permitted without license from IHS
Not for Resale

```
PROGRAM OUTPUT
PRINTOUT INDEX IPO = 1

TEST RUN FOR ASME PTC 4.4  JJZ
EXHAUST GAS ENTHALPY = ISO CONDITIONS,  IPO=1
NO.2 OIL
 59.0    0.0 14.696    0.0 60.00  1
 100.     0.0 0.01500 0.0      0.0
 87.50  12.00   0.50   0.0    0.0    0.0    0.0    0.0
```

GAS TURBINE EXHAUST ENTHALPY

FUEL = NO.2 OIL

CARBON = 87.50 PERC.

HYDROGEN = 12.00 PERC.

SULFUR = 0.50 PERC.

NON-COMB. = 0.0 PERC.

CONSTANTS

TEMPERATURE DATUM = 0. DEG.F

DRY BULB (AMBIENT) = 59. DEG.F

REL. HUMIDITY = 60. PERC.

BAROMETRIC PRESS. = 14.696 PSIA.

ENTHALPY ABOVE ABSOLUTE ZERO – BTU/LB

GAS TURBINE FUEL-AIR RATIO

EXHAUST TEMP. DEG.F.	.015	.020	.025	.030	.035	.040	.045	.050	.055	.060
100.	135.1	135.3	135.5	135.7	135.8	136.0	136.2	136.4	136.6	136.8
150.	147.3	147.5	147.8	148.0	148.2	148.5	148.7	148.9	149.2	149.4
200.	159.5	159.8	160.1	160.4	160.7	161.0	161.2	161.5	161.8	162.1
250.	171.8	172.2	172.5	172.8	173.2	173.5	173.8	174.2	174.5	174.8
300.	184.2	184.6	185.0	185.4	185.8	186.1	186.5	186.9	187.3	167.6
350.	196.6	197.0	197.5	197.9	198.4	198.8	199.3	199.7	200.1	200.6
400.	209.1	209.6	210.1	210.6	211.1	211.6	212.1	212.6	213.1	213.6
450.	221.6	222.2	222.8	223.3	223.9	224.5	225.0	225.6	226.1	226.6
500.	234.2	234.9	235.5	236.2	236.8	237.4	238.0	238.6	239.2	239.8
550.	246.9	247.6	248.3	249.1	249.7	250.4	251.1	251.8	252.5	253.1
600.	259.7	260.5	261.3	262.0	262.8	263.6	264.3	265.0	265.8	266.5
650.	272.6	273.4	274.3	275.1	275.9	276.8	277.6	278.4	279.2	280.0
700.	285.5	286.4	287.4	288.3	289.2	290.1	291.0	291.8	292.7	293.6
750.	298.5	299.5	300.5	301.5	302.5	303.5	304.4	305.4	306.3	307.3
800.	311.6	312.7	313.8	314.9	315.9	317.0	318.0	319.0	320.1	321.1
850.	324.8	326.0	327.2	328.3	329.4	330.6	331.7	332.8	333.9	335.0
900.	338.1	339.4	340.6	341.8	343.1	344.3	345.5	346.6	347.8	349.0
950.	351.5	352.8	354.1	355.5	356.8	358.0	359.3	360.6	361.8	363.1
1000.	364.9	366.3	367.8	369.2	370.5	371.9	373.3	374.6	375.9	377.3
1050.	378.5	380.0	381.5	383.0	384.4	385.9	387.3	388.7	390.2	391.6
1100.	392.1	393.7	395.3	396.8	398.4	399.9	401.5	403.0	404.5	406.0
1150.	405.8	407.5	409.1	410.8	412.4	414.1	415.7	417.3	418.9	420.5
1200.	419.5	421.3	423.1	424.9	426.6	428.3	430.0	431.7	433.4	435.0
1250.	433.4	435.3	437.1	439.0	440.8	442.6	444.4	446.2	448.0	449.7
1300.	447.3	449.3	451.3	453.2	455.1	457.0	458.9	460.8	462.6	464.5
1350.	461.3	463.4	465.4	467.5	469.5	471.5	473.5	475.4	477.4	479.3
1400.	475.4	477.5	479.7	481.8	484.0	486.1	488.1	490.2	492.2	494.2
1450.	489.5	491.8	494.0	496.3	498.5	500.7	502.9	505.0	507.1	509.3
1500.	503.7	506.1	508.4	510.8	513.1	515.4	517.7	519.9	522.1	524.3
1550.	518.0	520.4	522.9	525.3	527.8	530.1	532.5	534.9	537.2	539.5

Copyright ASME International
Provided by IHS under license with ASME
No reproduction or networking permitted without license from IHS
Not for Resale

EXHAUST TEMP. DEG.F.	ENTHALPY ABOVE ABSOLUTE ZERO – BTU/LB GAS TURBINE FUEL–AIR RATIO									
	.015	.020	.025	.030	.035	.040	.045	.050	.055	.060
1600.	532.3	534.9	537.4	540.0	542.5	545.0	547.4	549.9	552.3	554.7
1650.	546.6	549.3	552.0	554.7	557.3	559.9	562.4	565.0	567.5	570.0
1700.	561.1	563.9	566.7	569.4	572.1	574.8	577.5	580.1	582.8	585.4
1750.	575.6	578.5	581.4	584.2	587.0	589.8	592.6	595.4	598.1	600.8
1800.	590.1	593.1	596.1	599.1	602.0	604.9	607.8	610.6	613.5	616.3
1850.	604.7	607.8	610.9	614.0	617.0	620.0	623.0	626.0	628.9	631.8
1900.	619.3	622.5	625.7	628.9	632.1	635.2	638.3	641.3	644.4	647.4
1950.	634.0	637.3	640.6	643.9	647.2	650.4	653.6	656.8	659.9	663.0
2000.	648.7	652.1	655.6	659.0	662.3	665.7	669.0	672.2	675.5	678.7

Copyright ASME International
Provided by IHS under license with ASME
No reproduction or networking permitted without license from IHS
Not for Resale

```
PRINTOUT INDEX IPO = 2

TEST RUN FOR ASME PTC 4.4  JJZ
EXHAUST GAS TEMPERATURE = ISO CONDITIONS,  IPO = 2
NO.2 OIL
59.0  0.0  14.696   0.0 60.00  2
  0. 130.0  0.01500 0.0     0.0
87.50 12.00    0.50   0.0    0.0     0.0    0.0    0.0
```

GAS TURBINE EXHAUST TEMPERATURE

FUEL = NO.2 OIL

CARBON = 87.50 PERC.

HYDROGEN = 12.00 PERC.

SULFUR = 0.50 PERC.

NON-COMB. = 0.0 PERC.

CONSTANTS

TEMPERATURE DATUM = 0. DEG.F

DRY BULB (AMBIENT) = 59. DEG.F

REL. HUMIDITY = 60. PERC.

BAROMETRIC PRESS. = 14.696 PSIA.

EXHAUST ENTHALPY BTU/LB	TEMPERATURE – DEG.F GAS TURBINE FUEL–AIR RATIO .015	.020	.025	.030	.035	.040	.045	.050	.055	.060
130.0	79.5	78.5	78.0	77.5	76.5	76.0	75.5	74.5	74.0	73.5
140.0	120.5	119.5	118.5	118.0	117.0	116.0	115.5	114.5	114.0	113.0
150.0	161.5	160.5	159.5	158.5	157.5	156.5	155.5	154.5	153.5	152.5
160.0	202.0	201.0	200.0	198.5	197.5	196.5	195.5	194.5	193.0	192.0
170.0	243.0	241.5	240.0	239.0	237.5	236.5	235.0	234.0	232.5	231.5
180.0	283.5	282.0	280.5	279.0	277.5	276.0	274.5	273.0	272.0	270.5
190.0	324.0	322.0	320.5	318.5	317.0	315.5	314.0	312.5	311.0	309.5
200.0	364.0	362.0	360.0	358.5	356.5	355.0	353.0	351.5	350.0	348.0
210.0	404.0	402.0	400.0	398.0	396.0	394.0	392.0	390.5	388.5	386.5
220.0	444.0	441.5	439.5	437.0	435.0	433.0	431.0	429.0	427.0	425.0
230.0	483.5	481.0	478.5	476.5	474.0	471.5	469.5	467.5	465.0	463.0
240.0	523.0	520.5	518.0	515.0	512.5	510.5	508.0	505.5	503.0	501.0
250.0	562.5	559.5	556.5	554.0	551.0	548.5	546.0	543.5	541.0	538.5
260.0	601.5	598.5	595.5	592.5	589.5	587.0	584.0	581.5	578.5	576.0
270.0	640.5	637.0	634.0	631.0	627.5	624.5	622.0	619.0	616.0	613.5
280.0	679.0	675.5	672.0	669.0	665.5	662.5	659.5	656.5	653.5	650.5
290.0	717.5	714.0	710.5	707.0	703.5	700.0	696.5	693.5	690.5	687.0
300.0	756.0	752.0	748.5	744.5	741.0	737.5	734.0	730.5	727.0	724.0
310.0	794.0	790.0	786.0	782.0	778.5	774.5	771.0	767.5	763.5	760.5
320.0	832.0	827.5	823.5	819.5	815.5	811.5	807.5	804.0	800.0	796.5
330.0	870.0	865.5	861.0	856.5	852.5	848.0	844.0	840.0	836.5	832.5
340.0	907.5	902.5	898.0	893.5	889.0	885.0	880.5	876.5	872.5	868.5
350.0	945.0	940.0	935.0	930.5	925.5	921.0	917.0	912.5	908.0	904.0
360.0	982.0	977.0	972.0	967.0	962.0	957.5	953.0	948.5	944.0	939.5
370.0	1019.0	1013.5	1008.5	1003.5	998.5	993.5	988.5	984.0	979.5	975.0
380.0	1056.0	1050.5	1045.0	1039.5	1034.5	1029.5	1024.5	1019.5	1014.5	1010.0
390.0	1092.5	1087.0	1081.5	1075.5	1070.5	1065.0	1060.0	1055.0	1050.0	1045.0
400.0	1129.5	1123.5	1117.5	1111.5	1106.0	1100.5	1095.0	1090.0	1085.0	1079.5
410.0	1165.5	1159.5	1153.5	1147.5	1141.5	1136.0	1130.5	1125.0	1119.5	1114.5
420.0	1202.0	1195.5	1189.5	1183.0	1177.0	1171.0	1165.5	1160.0	1154.5	1149.0
430.0	1238.0	1231.5	1225.0	1218.5	1212.5	1206.5	1200.5	1194.5	1189.0	1183.0

Copyright ASME International
Provided by IHS under license with ASME
No reproduction or networking permitted without license from IHS
Not for Resale

EXHAUST TEMP.	ENTHALPY ABOVE ABSOLUTE ZERO – BTU/LB GAS TURBINE FUEL-AIR RATIO									
DEG.F.	.015	.020	.025	.030	.035	.040	.045	.050	.055	.060
440.0	1274.0	1267.0	1260.5	1254.0	1247.5	1241.0	1235.0	1229.0	1223.0	1217.5
450.0	1310.0	1303.0	1296.0	1289.0	1282.5	1276.0	1269.5	1263.5	1257.5	1251.5
460.0	1345.5	1338.5	1331.0	1324.0	1317.5	1310.5	1304.0	1297.5	1291.5	1285.5
470.0	1381.5	1373.5	1366.5	1359.0	1352.0	1345.0	1338.5	1332.0	1325.5	1319.0
480.0	1416.5	1409.0	1401.5	1394.0	1386.5	1379.5	1372.5	1366.0	1359.0	1352.5
490.0	1452.0	1444.0	1436.5	1428.5	1421.0	1414.0	1406.5	1400.0	1393.0	1386.0
500.0	1487.5	1479.0	1471.0	1463.0	1455.5	1448.0	1440.5	1433.5	1426.5	1419.5
510.0	1522.5	1514.0	1506.0	1497.5	1490.0	1482.0	1474.5	1467.0	1460.0	1453.0

Copyright ASME International
Provided by IHS under license with ASME
No reproduction or networking permitted without license from IHS

Not for Resale

```
PRINTOUT INDEX IPO = 3

TEST RUN FOR ASME PTC 4.4  JJZ
EXHAUST GAS ENTHALPY = ISO CONDITIONS,  IPO=3
NATURAL GAS
 59.0    0.0 14.696    0.0 60.00  3
 500.     0.0 0.02500 0.0      0.0
 75.00  22.50   0.50   0.0    0.50   0.50   0.50   0.50
```

```
TEST RUN FOR ASME PTC 4.4  JJZ
EXHAUST GAS ENTHALPY = ISO CONDITIONS,  IPO=3
NATURAL GAS

CARBON   = 75.00 PERC.    SULFUR     =  0.50 PERC.
HYDROGEN = 22.50 PERC.    NON-COMB.  =  2.00 PERC.
```

COMPONENT	PRODUCT WEIGHT PER LB	INCR. ENTHALPY BTU/LB	PRODUCT ENTHALPY BTU/LB
TEMPERATURE	500.0 DEG.F		
DRY AIR	0.96946	230.99	223.94
MOISTURE	0.00615	429.81	2.64
CARBON IN FUEL	0.01829	121.99	2.23
HYDROGEN IN FUEL	0.00549	2158.09	11.84
SULFUR IN FUEL	0.00012	68.66	0.01
NON-COMB. IN FUEL	0.00049		0.05
TOTALS	1.00000		240.72
TEMPERATURE	1000.0 DEG.F		
DRY AIR	0.96946	358.55	347.60
MOISTURE	0.00615	678.52	4.17
CARBON IN FUEL	0.01829	279.96	5.12
HYDROGEN IN FUEL	0.00549	3411.44	18.72
SULFUR IN FUEL	0.00012	133.02	0.02
NON-COMB. IN FUEL	0.00049		0.07
TOTALS	1.00000		375.72
TEMPERATURE	1500.0 DEG.F		
DRY AIR	0.96946	493.54	478.47
MOISTURE	0.00615	947.56	5.82
CARBON IN FUEL	0.01829	471.75	8.63
HYDROGEN IN FUEL	0.00549	4792.24	26.30
SULFUR IN FUEL	0.00012	206.37	0.03
NON-COMB. IN FUEL	0.00049		0.10
TOTALS	1.00000		519.37

Copyright ASME International
Provided by IHS under license with ASME
No reproduction or networking permitted without license from IHS
Not for Resale

```
PRINTOUT INDEX IPO = 4

TEST RUN FOR ASME PTC 4.4  JJZ
EXHAUST GAS TEMPERATURE = ISO CONDITIONS,   IPO=4
NATURAL GAS
 59.0   0.0 14.696   0.0 60.00  4
  50.  200.0 0.02500 0.0     0.0
 75.00  22.50   0.50   0.0    0.50   0.50   0.50   0.50
```

```
TEST RUN FOR ASME PTC 4.4  JJZ
EXHAUST GAS TEMPERATURE - ISO CONDITIONS,  IPO= 4
NATURAL GAS

CARBON   = 75.00 PERC.    SULFUR     =  0.50 PERC.
HYDROGEN = 22.50 PERC.    NON-COMB.  =  2.00 PERC.
```

ENTHALPY BTU/LB	TEMPERATURE DEG.F	FUEL-AIR RATIO
200.0	343.0	0.0250
300.0	724.0	0.0250
400.0	1087.0	0.0250
500.0	1434.5	0.0250

```
PRINTOUT INDEX IPO = 5

TEST RUN FOR ASME PTC 4.4  JJZ
EXHAUST GAS ENTHALPY - ISO CONDITIONS,   IPO=5
NATURAL GAS
 59.0   0.0 14.696   0.0 60.00  5
1000.    0.0 0.02500 0.0     0.0
 75.00  22.50   0.50   0.0    0.50   0.50     0.50   0.50
```

```
TEST RUN FOR ASME PTC 4.4  JJZ
EXHAUST GAS ENTHALPY - ISO CONDITIONS,  IPO=5
NATURAL GAS

CARBON   = 75.00 PERC.    SULFUR     =  0.50 PERC.
HYDROGEN = 22.50 PERC.    NON-COMB.  =  2.00 PERC.
```

	TOTAL IN	COMB. DRY AIR	COMB. O2	PRODUCTS CO2	PRODUCTS SO2	PRODUCTS H2O	NON-COMB.
DRY AIR	0.9695	0.9695					
MOISTURE	0.0061					0.0061	
FUEL CARBON	0.0183		(0.049)	0.0670			
FUEL HYDROGEN	0.0055		(0.044)			0.0490	
FUEL SULFUR	0.0001		(0.000)		0.0002		
FUEL NON-COMB.	0.0005						
WEIGHT - LB	1.0000	0.9695	(0.092)	0.0670	0.0002	0.0552	0.0005
INCR. ENTHALPY		358.55	334.19	319.39	233.51	678.52	
TOTAL ENTHALPY	375.70	347.60	(30.88)	21.41	0.06	37.45	0.07

Copyright ASME International
Provided by IHS under license with ASME
No reproduction or networking permitted without license from IHS
Not for Resale

7.4 Discussion of Effectiveness

7.4.1 General Discussion

Effectiveness quantifies the heat transfer performance of a heat recovery device and is the ratio of the enthalpy drop of the gas to the maximum enthalpy drop of the gas which is theoretically possible.

$$EF = \Delta h_G \div \Delta h_G \text{ MTP}$$

The maximum enthalpy drop and transfer of heat theoretically possible would occur with infinite heat transfer surface when the gas and water temperatures would coincide at one or more points (pinch points) in the boiler. In heat recovery boilers the temperature pinch may occur where the gas leaves the evaporator (evaporator pinch) or the economizer (economizer pinch). Unfired HRSG will generally have an evaporator pinch and boilers fired to more than 30 percent of the heat input will generally have an economizer pinch.

In the case of an evaporator pinch MTP enthalpy drop requires infinite heat transfer surface area in evaporator and economizer so the temperatures of the gas leaving the evaporator and the water leaving the economizer both are equal to the saturated water steam temperature in the evaporator. In the case of an economizer pinch MTP enthalpy drop requires infinite heat transfer surface in the economizer so the temperature of the gas would be cooled to the temperature of the water entering the economizer.

Temperature profiles of heat recovery boilers with evaporator and economizer pinches are shown in paragraphs 5.4.4.1 and 5.4.4.2.

Calculations of effectiveness requires different expressions for evaporator and economizer pinches. When the location of the pinch is in doubt effectiveness should be calculated both for evaporator and economizer pinches. The expression which is appropriate will yield the higher effectiveness value. The expression for an evaporator pinch is found in 5.4.4.3.1 and for economizer pinch in 5.4.4.4.1.

7.4.2 Derivation of Effectiveness Equations

An evaporator pinch will occur when the proportion of heat in the gas above saturation temperature relative to the heat in the gas above economizer water inlet temperature is less than the proportion of heat required by the H_2O above saturation relative to the total heat required by the H_2O with equal water and steam flows.

An evaporator pinch will occur when

$$\frac{h_G - h_{GS3}}{h_G - h_{GW4}} < \frac{h_{S1} - h_{W3}}{h_{S1} - h_{W4}}$$

7.4.3 Derivation of Evaporator Pinch Effectiveness

With infinite evaporator heat transfer area the gas temperature leaving the evaporator would be reduced to the temperature of the saturated water in the evaporator.

With infinite economizer surface area the temperature of the water leaving the economizer and entering the evaporator would be raised to gas temperature leaving the evaporator and would equal drum saturation temperature.

In the MTP case with an evaporator pinch the gas and water temperatures at the evaporator economizer junction are known to be equal to evaporator saturation temperature from which their enthalpies can be found.

Knowing the gas enthalpy drop from superheat inlet to the temperature of the drum saturated water and the water side duties above saturation and the total water side duty, the gas enthalpy drop from inlet to the superheater to the outlet of the economizer is calculated by proportionality.

$$\Delta h_G \text{ MTP} = \frac{\Delta h_G \text{ above saturation} \times Q \text{ total}}{Q \text{ above saturation}}$$

where

Δh_G MTP = maximum theoretically possible (MTP) enthalpy drop of the gas

Q = water side duty

Without blowdown, extraction or induction of water (which is the preferred test condition) the water flow in economizer, evaporator and superheater are equal and the MTP gas enthalpy leaving the economizer can be found by proportionality of H_2O enthalpy rise above and below saturation.

Using terms as defined in paragraph 5.4.4.5 and where inlet and outlet H_2O flows are equal

$$\Delta h_G \text{ MTP} = \frac{(h_{G1} - h_{GS3})(h_{S1} - h_{W4})}{(h_{S1} - h_{W2})}$$

$$EF = \frac{\text{Enthalpy change of the exhaust gas}}{\text{MTP enthalpy change of the exhaust gas}} \times 100\%$$

$$EF = \frac{(h_{G1} - h_{G4})}{\Delta h_G \text{ MTP}} \times 100\%$$

$$EF = \frac{(h_{G1} - h_{G4})(h_{S1} - h_{W2})}{(h_{G1} - h_{GS3})(h_{S1} - h_{W4})} \times 100\%$$

Where water and steam flows are not equal the expression for Δh_G MTP and effectiveness with evaporator pinch are expanded to include terms for water and steam flow.

$$\Delta h_G \text{ MTP} = \frac{(h_{G1} - h_{GS3})[W_{S1}(h_{S1} - h_{W2}) + W_{W3}(h_{W2} - h_{W4})]}{W_{S1}(h_{S1} - h_{W2})}$$

$$EF = \frac{(h_{G1} - h_{G4})}{\Delta h_G \text{ MTP}} \times 100\%$$

Copyright ASME International
Provided by IHS under license with ASME
No reproduction or networking permitted without license from IHS
Not for Resale

$$EF = \frac{(h_{G_1} - h_{G_4})\, W_{S_1}\, (h_{S_1} - h_{W_2})}{(h_{G_1} - h_{GS_3})\, [W_{S_1}\, (h_{S_1} - h_{W_2}) + W_{W_3}\, (h_{W_2} - h_{W_4})]} \times 100\%$$

7.4.4 Derivation of Effectiveness Equation — Economizer Pinch

With an economizer pinch infinite surface area would reduce the gas temperature to equal the water inlet temperature

$$\Delta h_G \text{ MTP} = h_{G_1} - h_{GW4}$$

Effectiveness economizer pinch

$$EF = \frac{(h_{G_1} - h_{G_4})}{(h_{G_1} - h_{GW4})} \times 100\%$$

Effectiveness is influenced by extraction, blowdown, etc. A test for effectiveness should preferably be conducted without extraction or blowdown or should be conducted with the design proportion of such flows.

7.4.5 Other Considerations of Test Method

The gas inlet temperature of low fired heat recovery boilers produces a temperature pinch which prevents a low stack temperature. Because of the temperature pinch the highest boiler efficiency theoretically possible may be 70 percent. A boiler with 60 percent efficiency is then 86 percent as efficient as possible (100 x 60 ÷ 70). The effectiveness of the same boiler would be 86 percent truly reflecting the merit of the boiler, which is not properly expressed by efficiency.

Efficiency calculated by input-output is strongly influenced by the accuracy of gas flow measurement. Efficiency calculated by the loss method is not materially influenced by gas flow measurement and effectiveness is not affected at all.

The performance criteria less influenced by gas flow measurement require less elaborate gas flow measurement equipment and avoid the need to precisely adjust performance to the design flow or to perform the test precisely at design conditions.

Precise establishment of the gas flow during a performance test for efficiency by the loss method is not very important and for effectiveness is unnecessary.

Effectiveness is less sensitive to boiler gas inlet temperature than is efficiency. Adjustments to effectiveness for off design gas inlet temperature is less critical with effectiveness.

Radiation and convection losses will improve measured effectiveness. Radiation and convection normally are of small relative magnitude and do not materially affect effectiveness or efficiency. When evaluating by effectiveness, radiation and convection may separately be quantified by methods in paragraph 4.5.4.

7.5 DISCUSSION OF HEATS OF COMBUSTION

7.5.1 Introduction

Heats of combustion of solid and liquid fuels are measured in the fixed volume of an oxygen bomb calorimeter.

Heat of combustion of a gaseous fuel is measured in the constant pressure of a continuous flow calorimeter.

In the calorimeters the water produced by combustion of the hydrogen in the fuel is condensed to liquid releasing the latent-heat of condensation which is included in the measured heat of combustion. Heat of combustion including the latent heat of the water produced is the higher heating value (HHV) of combustion. This is synonymous with the *gross* heat of combustion.

The water of combustion in commercial equipment is not condensed so the latent heat is not usable. The lower heating value (LHV) of combustion is calculated from gross heating value omitting the latent heat and is used throughout this code. The lower heating value is synonymous with *net* heat of combustion.

7.5.2 Terminology

Heat of combustion is also called heating value or HV. Gross when referred to heat of combustion is also called higher and net is called lower.

Thus:

Gross heat of combustion = Higher Heating Value
= H.H.V.

Net heat of combustion = Lower Heating Value
= L.H.V.

The heat of combustion of solid and liquid fuels measured in the bomb calorimeter must be converted from the constant volume conditions in the bomb to the constant pressure condition of the practical applications covered by this Code.

The hydrogen in fuel and the water produced therefrom is solely responsible for differences between higher heating value, lower heating value, constant volume and constant pressure heats of combustion.

On the basis of the hydrogen fraction of the dry fuel the conversions are depicted on Fig. 7.5.1.

Use of the Fig. 7.5.1 is demonstrated by conversion of higher heating value of combustion for a No. 2 type oil measured in a bomb calorimeter to other bases in the following example.

7.5.3 Example

Oil with 12.06 percent H yields 19300 Btu per lb when tested in a bomb calorimeter.

Copyright ASME International
Provided by IHS under license with ASME
No reproduction or networking permitted without license from IHS
Not for Resale

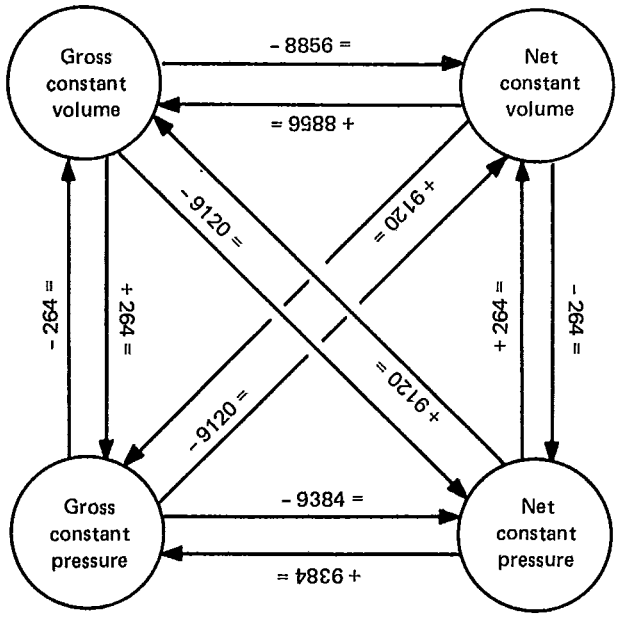

Example of Use of Diagram

Gross heat of combustion at constant pressure = Net heat of combustion at constant volume plus lb H_2/lb fuel x 9120

FIG. 7.5.1.

Higher heating value of combustion in a const. vol. = 19300 Btu/lb

Lower heating value const. vol. = 19300 - 0.1206 x 8856 = 18232 Btu/lb

Higher heating value const. press. = 19300 + 0.1206 x 264 = 19332 Btu/lb

Lower heating value const. press. = 19300 - 0.1206 x 9120 = 18200 Btu/lb

ASTM D 2382, Heat of Combustion of Hydrocarbon Fuels by Bomb Calorimeter (High Precision Method), requires that all results be quoted for a base temperature of 25°C (77°F) as used in this Code.

Other codes and tabulations quote heating values at temperatures of 60 and 68°F (20°C) at which the conversions are different.

Many tables of heats of combustion will be found to differ by small amounts from the conversions found herein. Differences may be due to use of different values for the latent heat of vaporization of water. The value given in the 1967 ASME steam tables for 77°F (1050.1) has been used herein. Confusion may also arise because of failure to adequately define heat of combustion. For example it may not be stated whether higher heating value is a constant volume or constant pressure value. Confusion may also occur with lower heating value but lower heating value can usually be taken as being a constant pressure value.

The particular conditions which apply to the presented values can usually be ascertained by use of the correlations herein. For gaseous fuels values for constant pressure usually are given. For liquids and solids the higher heating value of combustion is usually derived from a bomb test in a constant volume.

7.5.4 Gaseous Fuels

The conversions between higher and lower heating values for gaseous fuels are the same as for liquid and solid fuels. Conversions from constant volume to constant pressure for gaseous fuels are different from liquid or solid fuels because the fuel being gaseous before combustion results in a different interchange of heat and PV energy.

Heating values of gaseous fuels are determined in constant pressure calorimeters so the constant volume to constant pressure conversion is a theoretical value only and is not required in practice. For gaseous fuels the conversion of importance is from higher to lower heating value at constant pressure equal to a deduction of 9384 Btu per pound of hydrogen.

7.5.5 Adjustment for Calorimeter Test Base Temperature

The higher heating value of combustion includes the latent heat of condensation of the water of combustion which varies by about 0.56 Btu per °F per lb of water adjacent to the standard temperature for calorimeter tests. This converts to 5 Btu/°F per lb H_2 in the fuel. Higher heating values of combustion may be adjusted to different base temperatures by this factor.

7.5.6 Accuracy and Consistency of Heats of Combustion

Tests for heat of combustion are subject to unavoidable inconsistencies. Discrepancies of 50 Btu per lb are regarded as normal by ASTM.

Recognizing the possible discrepancies in determination of heat of combustion small differences between sources of information are within the accuracy of tests.

Copyright ASME International
Provided by IHS under license with ASME
No reproduction or networking permitted without license from IHS
Not for Resale

PERFORMANCE TEST CODES

While providing for exhaustive tests, these Codes are so drawn that selected parts may be used for tests of limited scope.

A complete list of ASME publications [illegible] upon request.

PERFORMANCE TEST CODES NOW AVAILABLE

PTC 41 — Air Heaters. . . . . (1968)
PTC 23 — Atmospheric Water Cooling Equipment . . . . . (1958)
PTC 8.2 — Centrifugal Pumps . . . . . (1965)
PTC 12.1 — Closed Feedwater Heaters . . . . . (1978)
PTC 4.2 — Coal Pulverizers . . . . . (1969)
PTC 10 — Compressors and Exhausters . . . . . (1965)
PTC 39.1 — Condensate Removal Devices for Steam Systems . . . . . (1980)
PTC 2 — Definitions and Values . . . . . (1980)
PTC 9 — Displacement Compressors, Vacuum Pumps and Blowers . . . . . (1970)
PTC 7.1 — Displacement Pumps . . . . . (1962)
PTC 12.3 — Deaerators . . . . . (1977)
PTC 27 — Determining Dust Concentration in a Gas Stream. . . . . (1957)
PTC 38 — Determining the Concentration of Particulate Matter in a Gas Stream. . . . . (1980)
PTC 28 — Determining the Properties of Fine Particulate Matter . . . . . (1965)
PTC 3.1 — Diesel and Burner Fuels . . . . . (1958)
PTC 21 — Dust Separating Apparatus. . . . . (1941)
PTC 24 — Ejectors . . . . . (1976)
PTC 14 — Evaporating Apparatus . . . . . (1970)
PTC 16 — Gas Producers and Continuous Gas Generators . . . . . (1958)
PTC 4.4 — Gas Turbine Heat Recovery Steam Generators . . . . . (1981)
PTC 22 — Gas Turbine Power Plants . . . . . (1966)
PTC 3.3 — Gaseous Fuels . . . . . (1969)
PTC 1 — General Instructions . . . . . (1980)
PTC 18 — Hydraulic Prime Movers . . . . . (1949)
PTC 31 — Ion Exchange Equipment . . . . . (1973)
PTC 33 — Large Incinerators. . . . . (1978)
PTC 32.1 — Nuclear Steam Supply Systems . . . . . (1969)
PTC 20.2 — Overspeed Trip Systems for Steam Turbine-Generator Units . . . . (1965)
PTC 20.3 — Pressure Control Systems Used on Steam Turbine Generator Units . . . . . (1970)
PTC 18.1 — Pumping Mode of Pump/Turbines. . . . . (1978)
PTC 17 — Reciprocating Internal-Combustion Engines. . . . . (1973)
PTC 7 — Reciprocating Steam-Driven Displacement Pumps . . . . . (1949)
PTC 5 — Reciprocating Steam Engines . . . . . (1949)
PTC 25.3 — Safety and Relief Valves . . . . . (1976)
PTC 3.2 — Solid Fuels. . . . . (1954)
PTC 20.1 — Speed and Load Governing Systems for Steam Turbine-Generator Units . . . . . (1977)
PTC 29 — Speed-Governing Systems for Hydraulic Turbine-Generator Units . . . . . (1965)
PTC 26 — Speed-Governing Systems for Internal Combustion Engine-Generator Units . . . . . (1962)
PTC 12.2 — Steam Condensing Apparatus . . . . . (1955)
PTC 4.1 — Steam-Generating Units . . . . . (1964)
PTC 6 — Steam Turbines . . . . . (1976)
PTC 6A — Appendix A to Test Code for Steam Turbines. . . . . (1964)

PTC 6 Report — Guidance for Evaluation of Measurement Uncertainty in Performance Tests of Steam Turbines . . . . (1969)
PTC 6S Report — Simplified Procedures for Routine Performance Tests os Steam Turbines . . . . . (1970)
PTC 32.2 Report — Methods of Measuring the Performance of Nuclear Reactor Fuel in Light Water Reactors. . . . . (1978)

D00043

Copyright ASME International
Provided by IHS under license with ASME
No reproduction or networking permitted without license from IHS
Not for Resale