ASME PTC*4.2 69 ■ 0759670 0054057 9 ■

PTC 4.2 - 1969
REAPPROVED '79

# Coal Pulverizers

Supplement to Performance Test Code
for Steam Generating Units, PTC 4.1

PERFORMANCE
TEST
CODES

THE AMERICAN SOCIETY OF MECHANICAL ENGINEERS
United Engineering Center
345 East 47th Street New York, N.Y. 10017

Copyright ASME International
Provided by IHS under license with ASME
No reproduction or networking permitted without license from IHS
Not for Resale

# Coal Pulverizers

PERFORMANCE TEST CODES

Supplement to Performance Test Code for Steam Generating Units, PTC 4.1

Copyright ASME International
Provided by IHS under license with ASME
No reproduction or networking permitted without license from IHS
Not for Resale

Library of Congress Catalog No. 70-77829

Copyright, 1969, by
The American Society of Mechanical Engineers
Printed in the United States of America

Copyright ASME International
Provided by IHS under license with ASME
No reproduction or networking permitted without license from IHS

Not for Resale

# FOREWORD

In 1937 the American Boiler Manufacturers and Affiliated Industries Association approached the ASME Performance Test Codes Committee with the request for the development of a Code on the testing of coal pulverizers.

After discussion of this problem by the standing Performance Test Codes Committee, the scope of the Performance Test Code Committee No. 4 on Stationary Steam-Generating Units was expanded to cover the performance characteristics of equipment such as coal pulverizers and other fuel burning apparatus.

A preliminary draft of the Code PTC 4.1 was distributed for comment and criticism in January, 1941. Notification of completion of this code appeared in the May, 1943, issue of Mechanical Engineering. At the December 3, 1943, meeting of the standing Committee it was approved and adopted by the Council on May 16, 1944.

In May, 1958, Performance Test Code Committee No. 4 was reorganized and instructed to rewrite and bring up to date the Performance Test Code for Steam Generating Units, PTC 4.1, and its Supplement, the Test Code for Coal Pulverizers, PTC 4.2. Later these instructions were extended to include a new Supplement, the Test Code for Air Heaters, PTC 4.3.

The revised Test Code for Coal Pulverizers PTC 4.2 1969 was approved by the Performance Test Codes Committee on March 15, 1968.

The revised PTC 4.1 was approved and adopted by the Council of the Society by action of the Policy Board, Codes and Standards, on June 24, 1964; the revised PTC 4.2 1969 on October 28, 1968; and PTC 4.3 on November 8, 1967.



Copyright ASME International
Provided by IHS under license with ASME
No reproduction or networking permitted without license from IHS
Not for Resale

## PERSONNEL OF PERFORMANCE TEST CODE COMMITTEE

## NO. 4 ON STATIONARY STEAM-GENERATING UNITS

John M. Driscoll, *Chairman*
John V. Cleary, Jr., *Secretary*

James U. Baley, General Superintendent, Electric Operations, Baltimore Gas and Electric Company, Gas and Electric Building, Baltimore, Maryland, 21203

Charles D. Birget, formerly Chief Mechanical Engineer, Commonwealth Associates, Inc., 209 E. Washington Avenue, Jackson, Michigan, 49201

John A. Bostic, General Supervising Engineer, Civil and Mechanical Engineering Department, The Cleveland Electric Illuminating Company, Box 5000, Cleveland, Ohio, 44101

Hugh J. Byrne, Steam-Power Engineer, Central Engineering Office, Crown Zellerbach Corporation, 6363 Airport Way, Seattle, Washington, 98108

John V. Cleary, Jr., Chief Cost Engineer, Cost Engineering Bureau, Consolidated Edison Company of New York, Inc., 4 Irving Place, New York, New York, 10003

Leonard Cohen, Head, Operation Management Department, Naval Ship Engineering Center, Philadelphia Division, U.S. Naval Base, Philadelphia, Pennsylvania, 19112

John M. Driscoll, Chief Mechanical Engineer, Consolidated Edison Company of New York, Inc., 4 Irving Place, New York, New York, 10003

John H. Fernandes, Chief Project Engineer, Product Diversification Dept., Combustion Engineering, Inc., Prospect Hill Road, Windsor, Connecticut, 06095

William Z. Harper, Assistant Superintendent, Utilities Division, Kodak Park Works, Eastman Kodak Company, Rochester, New York, 14604

Edward C. Kistner, Engineer in Charge of Power Plant Section, Mechanical Engineering Division, Philadelphia Electric Company, 9th and Sansom Streets, Philadelphia, Pennsylvania, 19105

Frank C. Lisevick, Mechanical Engineer, Stone & Webster, Inc., 225 Franklin St., Boston, Massachusetts, 02107

Robert A. Lorenzini, Senior Vice-President, Foster Wheeler Corporation, 110 South Orange Avenue, Livingston, New Jersey, 07039

John F. McLaughlin, Jr., Manager, Production Engineering, Power Production Engineering, Union Electric Company, 315 North 12th Boulevard, St. Louis, Missouri, 63101

Silas L. Morse, Assistant Manager Field Engineering, The Babcock & Wilcox Company, 20 South Van Buren Avenue, Barberton, Ohio, 44203

Henry D. Mumper, Engineering Specialist, Engineering Department, Combustion Engineering, Inc., New York, New York (deceased October 9, 1959)

Richard H. Pechstein, Assistant Chief Mechanical Engineer, American Electric Power Service Corporation, Two Broadway, New York, New York, 10008

Herbert C. Schweikart, Vice President and Chief Engineer, Gilbert Associates, Inc., 525 Lancaster Avenue, Reading, Pennsylvania, 19602

Lawson E. Stewart, Marketing Representative, International Business Machines Corporation, 2330 St. Paul Street, Baltimore, Maryland, 21218

Joseph A. Waddell, Assistant Chief Service Engineer, Riley Stoker Corporation, Worcester, Massachusetts, 01606



Copyright ASME International
Provided by IHS under license with ASME
No reproduction or networking permitted without license from IHS
Not for Resale

## Personnel of Performance Test Codes Committee

F.H. Light, *Chairman*
J.W. Murdock, *Vice-Chairman*

J. H. Anderson
Theodore Baumeister
H.S.Bean
K.C. Cotton
R.C. Dannettel
J.M. Driscoll
M.D. Engle
V.F. Estcourt
J.H. Fernandes
F.K. Fischer
L.J.Hooper
R.C. King, Jr.
E.L. Knoedler
R.T. Mathews
W.G. McLean
W.T. Moore
W.C. Osborne
W.A. Pollock
J.H. Potter
C.B. Scharp
H.C. Schweikart
J.F. Sebald
J.C. Westcott



Copyright ASME International
Provided by IHS under license with ASME
No reproduction or networking permitted without license from IHS
Not for Resale

# ASME PERFORMANCE TEST CODES
# Test Code for
# COAL PULVERIZERS

## CONTENTS


| Section | | Pars. |
|---|---|---|
| 0 | INTRODUCTION | 0.1 |
| 1 | OBJECT AND SCOPE | 1.1-1.2.2 |
| | Object | 1.1 |
| | Scope | 1.2 |
| | Fig. 1 - Equipment Arrangement — Direct-Fired Pressure Type | |
| | Fig. 2 - Equipment Arrangement — Direct-Fired Suction Type | |
| | Fig. 3 - Equipment Arrangement — Storage Type | |
| 2 | DEFINITIONS | 2.1-2.2.15 |
| | Performance Factors | 2.1 |
| | Coal Pulverizer System | 2.2 |
| 3 | GUIDING PRINCIPLES | 3.1-3.6.2 |
| | Items on Which Agreement Shall Be Reached | 3.1 |
| | Tolerances and Limits of Error | 3.2 |
| | Preparation for Test | 3.3 |
| | Starting and Stopping | 3.4 |
| | Duration | 3.5 |
| | Instruments and Methods of Measurement | 3.6 |
| 4 | DATA REQUIRED, INSTRUMENTS AND APPARATUS | 4.1-4.2.10 |
| | Data Required | 4.1 |
| | Instruments and Apparatus | 4.2 |
| 5 | MEASUREMENTS | 5.1-5.7 |
| | Coal Weighing | 5.1 |
| | Power Measurements | 5.2 |
| | Raw Coal Sampling | 5.3 |
| | Pulverized Coal Sampling | 5.4 |
| | Fig. 4 - Arrangement for Sampling Pulverized Coal | |
| | Fig. 5 - Detail of Sampling Tip | |
| | Fig. 6 - Detail of Cyclone Collector | |
| | Fig. 7 - Sampling Zones for Various Pipe Sizes | |
| | Fig. 8 - Plot of Rosin and Rammler Chart for Use with Pulverized Coal | |
| | Measurement of Air Quantities | 5.5 |
| | Dust Losses | 5.6 |
| | Measurement of Pressures and Temperatures | 5.7 |
| 6 | CORRECTIONS | 6.1 |
| | Corrections for Variations in Operating Conditions | 6.1 |




Copyright ASME International
Provided by IHS under license with ASME
No reproduction or networking permitted without license from IHS
Not for Resale

# SECTION 0, INTRODUCTION

**0.1** This Code on Coal Pulverizers shall govern the preparations for tests, the taking of data, and the calculation of test results. General instructions for the conduct of tests are given in the Code on General Instructions (PTC 1), which should be studied carefully. The Code on Definitions and Values (PTC 2) and the Test Code for Steam Generating Units (PTC 4.1) should be followed where applicable. The Supplements on Instruments and Apparatus (PTC 19) shall be used as a guide to the selection and use of test equipment not specified in this Code.



Copyright ASME International
Provided by IHS under license with ASME
No reproduction or networking permitted without license from IHS
Not for Resale

# SECTION 1, OBJECT AND SCOPE

**1.1 Object.** The purpose of this Code is to establish procedures for conducting performance tests to determine:

*1.1.1* Capacity

*1.1.2* Fineness of product

*1.1.3* Raw coal feed

*1.1.3.1* Grindability

*1.1.3.2* Moisture

*1.1.3.3.* Sizing

*1.1.4* Power Consumption

*1.1.5* Effect of changes in raw coal characteristics on product fineness, pulverizer capacity, and power consumption.

*1.1.6* Effect of changes in pulverizer component settings on product fineness, pulverizer capacity, and power consumption.

**1.2 Scope.** This Code applies to the pulverizing system as a whole, including all the component parts necessary to take the raw coal, hot air and tempering air at the system inlet, and deliver pulverized coal in proper mixture with air and/or flue gas at the desired temperature at the outlet of the system. This Code applies to the most commonly used systems.

*1.2.1* The direct-fired system in which pulverizers deliver the coal directly to the burner. This system usually comprises the following equipment:

Pulverizer and classifier
Feeder
Exhauster or pulverizer fan
Air inlet and tempering air connection, including control damper
Discharge coal and air piping, including valves
Motors and/or steam drives
Sources of hot air or flue gas

Figures 1 and 2 illustrate the arrangement of these components in pressure and suction systems for direct firing.

*1.2.2* The storage system in which the coal is pulverized and stored in bins from which it is fed to the burners as needed. This system usually comprises the following equipment:

Pulverizer and classifier
Feeders, raw coal and pulverized coal
Exhauster or pulverizer fan
Pulverizer and hot flue gas fan
Coal and air piping including hot air inlet damper, cold air damper, and vent damper
Motors and/or steam drives
Source of hot air or flue gas
Vent cleaning equipment, which may be vent cyclone, concentrators or filters
Cyclone, cyclone air lock
Vent fan

Figure 3 illustrates the arrangement of these components for a typical storage system.

Copyright ASME International
Provided by IHS under license with ASME
No reproduction or networking permitted without license from IHS
Not for Resale

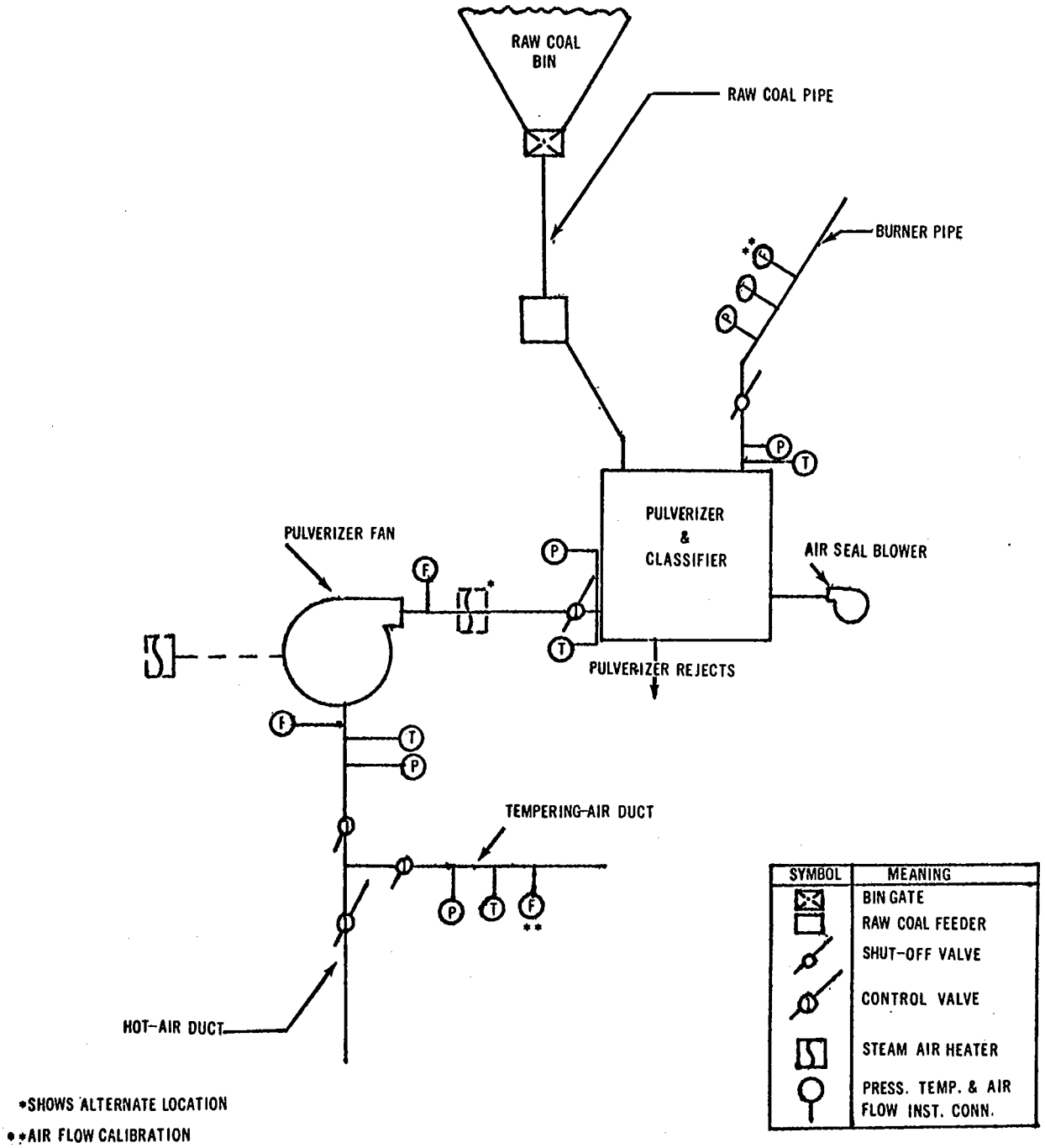


FIG. 1 EQUIPMENT ARRANGEMENT DIRECT-FIRED PRESSURE TYPE

Copyright ASME International
Provided by IHS under license with ASME
No reproduction or networking permitted without license from IHS
Not for Resale

# COAL PULVERIZERS

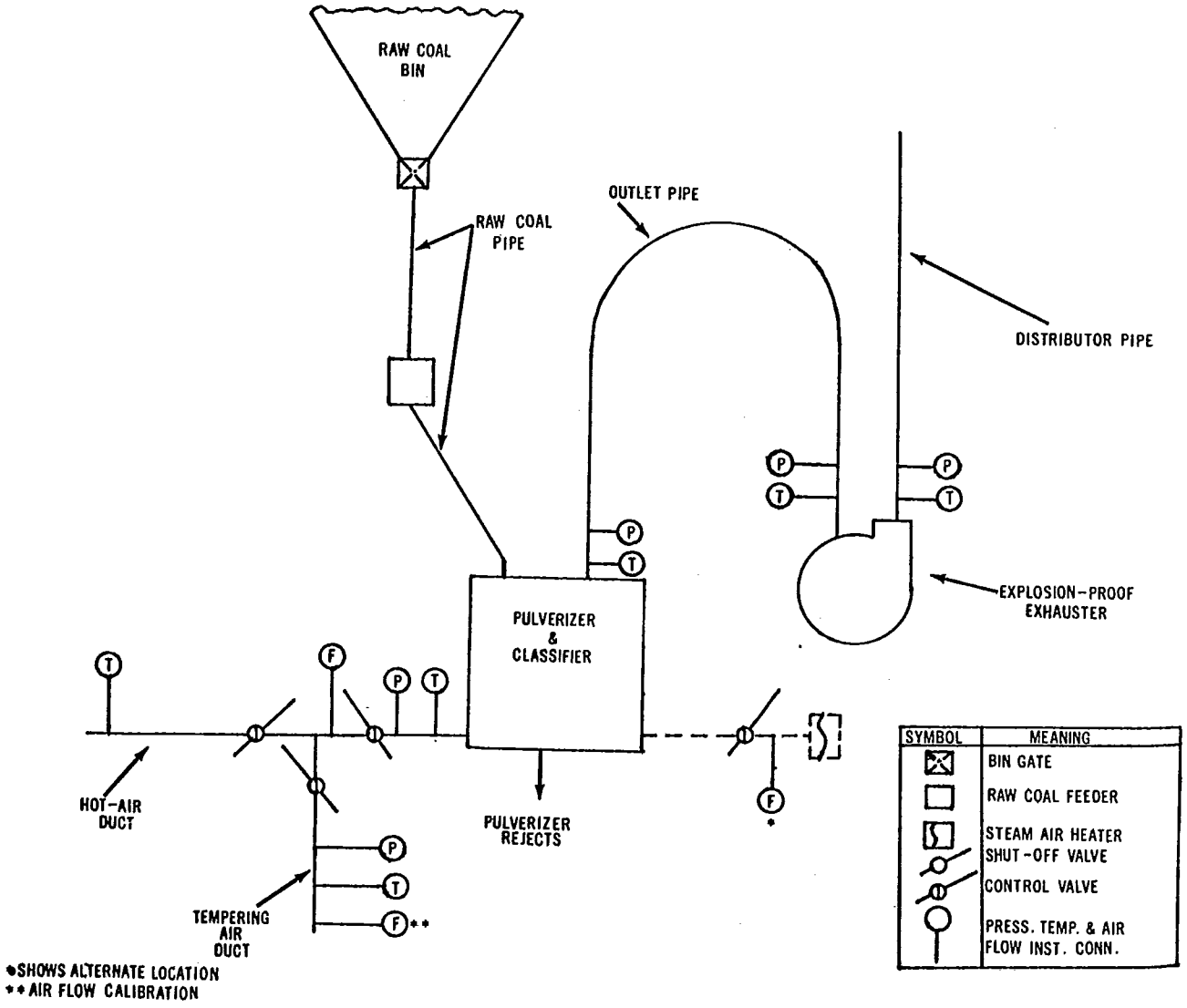


FIG. 2 EQUIPMENT ARRANGEMENT DIRECT-FIRED-SUCTION TYPE



Copyright ASME International
Provided by IHS under license with ASME
No reproduction or networking permitted without license from IHS
Not for Resale

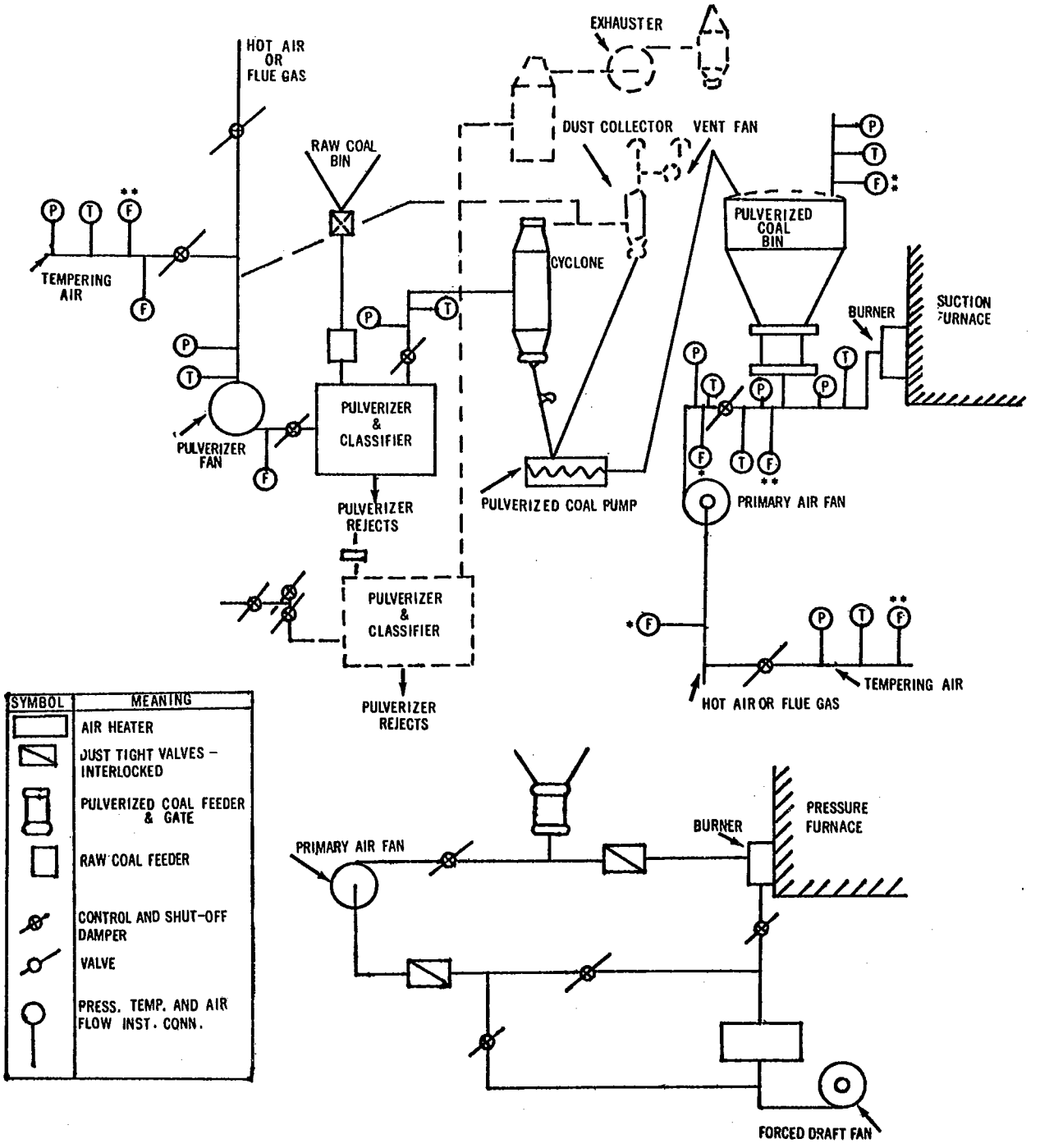


FIG. 3 EQUIPMENT ARRANGEMENT STORAGE-TYPE-PRESSURE AND SUCTION



Copyright ASME International
Provided by IHS under license with ASME
No reproduction or networking permitted without license from IHS
Not for Resale

## SECTION 2, DEFINITIONS

**2.1** The Code on Definitions and Values, PTC 2, defines the meaning and values of basic technical terms and numerical constants which are used throughout this Code. Definitions of *performance factors* specific to this Code are as follows:

*2.1.1 Capacity.* The measured output of the pulverizer in pounds of coal per hour.

*2.1.2 Fineness.* The measured particulate size distribution of pulverized product as determined by standard screens.

*2.1.3 Raw Coal Grindability.* The measured characteristic of coal representing its relative ease of pulverization on an arbitrary scale. The larger values, such as 100 on the Hardgrove grindability scale represent coals easy to pulverize, and the smaller values, such as 40, represent coals difficult to pulverize.

*2.1.4 Raw Coal Moisture.* The laboratory determination of moisture from samples taken during test run.

*2.1.5 Raw Coal Sizing.* The measured size distribution as determined by standard screens of samples taken during test run.

*2.1.6 Power Consumption.* The measured power input of the drives corrected to shaft input.

The foregoing performance factors are interrelated. For example, as product fineness is improved, capacity is adversely affected. As the grindability Hardgrove number increases in values an improvement occurs in the pulverizer capacity, and/or fineness.

**2.2** Definitions of terms specific to this Code and used in describing the coal pulverizing systems are as follows:

*2.2.01 Cyclone Air Lock.* A device used in a storage system at the bottom of the cyclone which permits the pulverized coal to discharge but prevents the flow of air and/or flue gas.

*2.2.02 Vent Cleaning Equipment.* An auxiliary separator used in storage systems to separate the coal dust from the vented air prior to discharge of the latter to the atmosphere or stack.

*2.2.03 Exhauster.* A fan connected to the outlet of a pulverizer and used to augment the capabilities of the air supply source in conveying coal from the pulverizer.

*2.2.04 Raw Coal Feeder.* An apparatus for introducing a controlled supply of sized coal to a pulverizer.

*2.2.05 Pulverized Coal Feeder.* An apparatus for delivering a controlled supply of pulverized coal to the primary air and/or flue gas line to the coal burning equipment.

*2.2.06 Pulverizer Fan.* A fan used to supply hot air and/or flue gas to the pulverizer.

*2.2.07 Classifier.* Device which returns oversize particles for further pulverization.

*2.2.08 Pulverizer Air.* The air and/or flue gas introduced into the pulverizer to dry the coal and convey the pulverized coal to the burners in Direct-Fired Systems or to the cyclone in storage systems.

*2.2.09 Recirculated Air.* The air recirculated from the cyclone outlet to the pulverizer inlet in storage systems.

*2.2.10 Refuse from Pulverizer.* The pyrites and other refuse rejected by the pulverizer.

*2.2.11 Tempering Air.* Air at a low temperature added to a stream of preheated air and/or flue gas to modify its temperature to a degree satisfactory for its use as pulverizer air.

*2.2.12 Cyclone.* A stationary centrifugal type separator used to separate pulverized coal from pulverizer air in a storage system.

*2.2.13 Vented Air.* The air and/or flue gas vented from a storage system. It may be all or only part of the pulverizer air.

*2.2.14 Vent Fan.* A fan used to exhaust the vented air from a storage system.

*2.2.15 Primary Air Fan.* A fan used to supply hot air and/or flue gas to the fuel transport line of a storage system.



Copyright ASME International
Provided by IHS under license with ASME
No reproduction or networking permitted without license from IHS
Not for Resale

ASME PERFORMANCE TEST CODES

# SECTION 3, GUIDING PRINCIPLES

**3.1 Items on which agreement shall be reached** prior to test are as follows:

*3.1.01* Object of test.

*3.1.02* Number of tests, duration, capacity for each test, and provision for preliminary tests.

*3.1.03* Conditions for rejection of a test run.

*3.1.04* Instruments to be used, calibration of instruments, methods of measurement and equipment to be used in testing the unit. The Supplements on Instruments and Apparatus should be used, when applicable.

*3.1.05* The coal to be used, the method of obtaining coal samples (See Pars. 5.3 and 5.4) and the laboratories to make the analysis.

*3.1.06* Method of grindability determination.

*3.1.07* Limits of variation in capacity for any one test.

*3.1.08* Limits of variation in moisture, size, and grindability of the fuel and fineness of product from a standard or guaranteed condition.

*3.1.09* Curves for making corrections for moisture, size, grindability of raw coal, and fineness of pulverized coal to be applied to the capacity and power consumption results.

*3.1.10* Correction for unavoidable air leakage.

*3.1.11* Method that will be used in determining the weight of coal fed to the pulverizer.

*3.1.12* Physical condition of pulverizer, and whether parts replacement are required. Testing of a pulverizer as soon as possible after initial operation is advisable both for checks of guaranteed performance and for establishing standards of performance for "as new" conditions.

**3.2 Tolerances and Limits of Error.** This Code does not include consideration of over-all tolerances or margins on performance guarantees. The test results shall be reported as computed from test observations with proper corrections for calibrations.

**3.3 Preparation for Test.** Install such measuring apparatus and instruments as may be required to attain the objective of the test.

*3.3.1* The quantity of balls in a ball mill should be estimated by carefully leveling the charge and measuring the level from an established datum point. The charge can then be found from the curves for the particular pulverizer and compared with the original weighed charge adjusted for make-up and estimated wear-rate.

*3.3.2* Coal of the analysis and size distribution agreed to by the parties to the test should be supplied to the raw coal bunker serving the pulverizer being tested and in sufficient quantity to insure this coal being in the pulverizer during the entire test.

*3.3.3* Pulverizer air and gas flows and temperatures shall be set as near as possible to standard or guaranteed conditions.

**3.4 Starting and Stopping**

*3.4.1* The capacity immediately prior to the test shall be as close to the proposed test rate as possible. After insuring that the test coal has reached the pulverizer, at least 30 minutes of stable operation shall be obtained before the test is started. The level of the coal in the pulverizer feeder hopper, as well as in the pulverizer, must be the same before and after the test.

*3.4.2* The readings of all instruments, particularly integrating instruments, shall be recorded at the starting and stopping time.

*3.4.3* Each test shall be run with all predetermined conditions maintained as nearly constant as possible.

**3.5 Duration.** Performance tests of pulverizers shall each be of at least two hours duration.

**3.6 Instruments and Methods of Measurement.** The necessary instruments and procedures for ob-



Copyright ASME International
Provided by IHS under license with ASME
No reproduction or networking permitted without license from IHS
Not for Resale

taining measurements are prescribed herein and should be used in conjunction with the following Performance Test Codes and Supplements on Instruments and Apparatus and ASTM publications. In all cases, care shall be exercised to refer to the latest revision of the document concerned.

*3.6.1* ASME Performance Test Codes and Supplements on Instruments and Apparatus:

General Instructions PTC 1
Definitions and Values PTC 2
Solid Fuel PTC 3.2
Steam Generating Units PTC 4.1
Compressors and Exhausters PTC 10
Fans PTC 11
Supplements on Instruments and Apparatus PTC 19
Dust Separating Apparatus PTC 21
Determining Dust Concentration in a Gas Stream PTC 27

*3.6.2* ASTM Standard Methods:
Methods of Sampling Coals, D 492
Moisture Determination, D 271
Method of Test for Grindability of Coal by Hardgrove Machine Method, D 409
Method of Sampling and Fineness Test of Powdered Coal, D 197
Specification for Classification of Coal by Rank, D 388
Method of Test for Screen Analysis of Coal, D 410
ASTM Specification E-11 Standard Specifications for Sieves for Testing Purposes



Copyright ASME International
Provided by IHS under license with ASME
No reproduction or networking permitted without license from IHS
Not for Resale

ASME PERFORMANCE TEST CODES

# SECTION 4, DATA REQUIRED, INSTRUMENTS AND APPARATUS

**4.1 Data Required.** The following data are required in order to determine the performance of the coal pulverizing system.

*4.1.01* Weight of coal fed to pulverizer.

*4.1.02* Size distribution of coal to pulverizer.

*4.1.03* Coal level in pulverizer and feeder hopper at beginning and end of test.

*4.1.04* Surface and total moisture in coal fed to pulverizer.

*4.1.05* Moisture in pulverized coal.

*4.1.06* Grindability of coal fed to pulverizer.

*4.1.07* Fineness of pulverizer product.

*4.1.08* Temperature and humidity of room air.

*4.1.09* Temperature of preheated air and/or flue gas supplied for drying and conveying coal in the pulverizer.

*4.1.10* Temperature of tempering air.

*4.1.11* Temperature of air and/or flue gas mixture entering the pulverizer.

*4.1.12* Temperature of coal fed to pulverizer.

*4.1.13* Temperature of mixture of pulverized coal with air and/or flue gas leaving pulverizer.

*4.1.14* Pressure of air and/or flue gas entering and leaving each major component of the system such as pulverizer, fans, cyclones, dust collectors, etc.

*4.1.15* Quantity of total pulverizer air, hot air, or gas and tempering air including leakage; also of the return and vented air in storage systems.

*4.1.16* Vent loss (storage system).

*4.1.17* Power to drive pulverizer, fans, feeder, (cyclone air lock in storage systems).

**4.2 Instruments and Apparatus.** The instruments and apparatus required for pulverizer tests are:

*4.2.01* Scales for weighing coal — Individual automatic scales included in the pulverizing system may be used for weighing fuel before delivery to the feed hopper. Automatic scales shall be calibrated for accuracy and reliability and balanced after each dump.

*4.2.02* Calibrated coal feeders — Where the degree of accuracy is adequate for the purpose of the test, calibrated coal feeders may be used to determine the coal weight.

*4.2.03* Round-hole screens — For sizing coal to the pulverizer the screen to be used shall comply with the Test Code for Solid Fuels, PTC 3.2.

*4.2.04* Airtight containers for raw coal and pulverized coal samples—Containers for individual coal samples for moisture determination shall be noncorrosive, nonabsorbent and air-tight. Other samples such as for feed size and grindability determination may be placed in large clean drums or bins with covers to prevent accidental contamination.

*4.2.05* Pulverized coal sampling equipment — Sieves for determining fineness of pulverized fuel should be 50, 100, 200 mesh U.S. standard sizes. Sampling equipment and arrangement are detailed in Par. 5.4. All sieves shall comply with the Test Code for Solid Fuels, PTC 3.2.

*4.2.06* Means for determining air temperatures and humidities — Calibrated thermometers or calibrated thermocouples with potentiometer shall be used for measuring temperatures. Humidities shall be determined with a psychrometer.

*4.2.07* Means for measuring air pressure – U-tubes or inclined gages for determining pressure shall be filled with water or a liquid of known specific gravity.

*4.2.08* Means for measuring air quantities – Air flows may be measured by calibrated pitot tubes or flow meters. (see Par. 5.5)



Copyright ASME International
Provided by IHS under license with ASME
No reproduction or networking permitted without license from IHS
Not for Resale

*4.2.09* Sampling equipment for determining dust loading in vented air – For storage systems, vent losses shall be measured, see Par. 5.6.

*4.2.10* Instruments for determining power input to motor or turbine drives – Electric power may be measured by calibrated wattmeters or watthour meters.

Determination of power from a steam turbine requires the use of steam flowmeters, and pressure and temperature measuring devices (see Par. 5.2).

Directions regarding the characteristics, use, and calibration of most of this apparatus are given in the ASME Performance Test Codes Supplement on Instruments and Apparatus (PTC 19).



Copyright ASME International
Provided by IHS under license with ASME
No reproduction or networking permitted without license from IHS
Not for Resale

# SECTION 5, MEASUREMENTS

## 5.1 Coal Weighing

*5.1.1.* Coal shall be weighted as delivered to the pulverizer. The pulverizer capacity shall be taken as the average weight per hour of coal fed to the pulverizer over the test period. The rate of coal fed to the pulverizer shall be maintained as uniform as possible over the test period and recorded at regular intervals.

*5.1.2* A feeder may be used to determine the weight of coal if the feeder can be calibrated.

*5.1.3* Weighing procedure shall be as established in Pars. 4.2.01 and 4.2.02. Where automatic coal scales or calibrated feeders are used, the actual number of dumps shall be counted for the exact time of test, or integrators shall be read at the precise time for starting and stopping the test.

## 5.2 Power Measurements

*5.2.1* The power input to electric motors shall be determined from readings of calibrated indicating, integrating, or recording wattmeters over the period included between the starting and stopping time of each test.

*5.2.2* Procedures for obtaining power measurements are as set forth in the Supplement on Instruments and Apparatus, Electric Measurements in Power Circuits, PTC 19.6. Calculations of brake horsepower output shall be based on motor efficiency curves for the particular motor. Where extreme accuracy of brake horsepower output of fan or pulverizer drive motors is required, then the test procedure as set forth in ASA Code C 50-20, Test Code for Polyphase Induction Motors and Generators, shall be used.

*5.2.3* In the case of a steam turbine, the formula for obtaining shaft power is:

$$\text{Brake horsepower} = \frac{\text{Hourly steam flow x (Enthalpy of inlet steam-Isentropic enthalpy of exhaust steam) x Over-all turbine efficiency}}{2545}$$

Where

Steam flow is the metered flow in pounds per hour.

Enthalpy of inlet steam is the enthalpy at inlet pressure and temperature and percent moisture if not superheated.

Isentropic enthalpy of exhaust steam is the enthalpy at exhaust pressure and initial entropy.

Over-all efficiency is to be obtained from calibrated performance curves for the particular steam turbine.

2545 is the number of Btu per horsepower hour.

As an alternative to the above, the parties to the test may agree upon the necessary methods of measurements, which shall be fully described in the test report.

## 5.3 Raw Coal Sampling

*5.3.1 Samples for Moisture Determination.* A representative sample of raw coal shall be taken every 15 minutes and shall be obtained in accordance with the Test Code for Solid Fuels, PTC 3.2. However, special sample for moisture determination shall be separated from the general sample, quickly placed in a noncorrosive, non-absorbent, air-tight container and sealed immediately. This sample for moisture shall not be quartered or crushed prior to moisture determination in the laboratory. Every effort shall be made to avoid loss of moisture due to strong drafts at the point of sampling (such as may occur at a pulverizer feeder for example). The moisture of each individual sample shall be determined separately in two steps including the determination of the air drying loss of the whole sample and its container and the determination of total moisture, calculated as specified in ASTM Standard D 271. The moisture used for results shall be the average of the moisture content of all the respective samples. The amount of drying produced in the pulverizing system is the difference between the moisture in the raw coal and in the pulverized coal. As a check on this quantity in storage systems, a moisture balance may be made if the humidities and air quantities are known.

*"Because of the many variations in the condition under which coal must be sampled,



Copyright ASME International
Provided by IHS under license with ASME
No reproduction or networking permitted without license from IHS
Not for Resale

and the nature of the material being sampled, it is essential that the samples be collected by a trained and experienced sampler. Variations in the manner in which the coal is handled are such that it is impossible to specify rigid rules describing the exact manner of sample collection. Correct sampling principles must be applied to conditions as they are encountered.

The first principle of coal sampling for a boiler test is to obtain the sample from a moving stream. The second principle is to obtain as many increments as is practical. The ASTM increments listed under Section 5, Special Purpose Samplin g Procedure, should be considered the minimum accepted for fairly uniform coal from one source."

*5.3.2 Samples for Raw Coal Size Determination.* Samples for the determination of size shall be taken from the raw coal sample and deposited in a suitable container in sufficient quantity per increment to yield a gross sample for the test as specified in ASTM Standard D 410, Standard Method of Test for Screen Analysis of Coal. The screen analysis shall be made and reported in accordance with this Standard.

*5.3.3 Samples for Grindability Determination.* The sample taken for the determination of raw coal size distribution may also be used for the determination of grindability. After making the sieve test the gross sample shall be reassembled and reduced in accordance with ASTM Specification D 492, Standard Methods of Sampling Coals According to Ash Contents, so that the final sample shall have a weight of about 25 pounds after reducing the original quantity. The grindability test shall be made on a portion of this sample in accordance with ASTM Specification D 409, Method of Test for Grindability of Coal by Hardgrove Machine Method. The acceptance of this grindability determination for lignite rank of coals is in question as of the time of writing this Code.

**5.4 Pulverized Coal Sampling.** Figure 4 shows the recommended arrangement for sampling pulverized coal in a direct-fired system using a dustless sampling connection with an aspirator and a cyclone collector. In collecting the sample the compressed air is turned on to the dustless connection and adjusted to give a balanced pressure at the connection. The sampling tip is inserted in the dustless connection and the compressed air *again* adjusted to maintain a balanced pressure and then the fuel transport line is traversed holding the tip facing the coal-air stream at predetermined stations for equal periods of time. The aspirating air on the cyclone collector may or may not be used, depending on the static pressure in the fuel transport line as discussed later.

Figure 5 shows detailed dimensions of the recommended sampling tip. The tip area is 13/16 in. × 3/8 in. or 0.305 sq. in., which is the projected area of the tip facing the coal-air stream.

Figure 6 shows the details of the cyclone collector.

In sampling coal from a stream of coal and air it is essential that the velocity into the sampling tip be nearly the same as the velocity in the pipe. If the velocity in the sampling tube is much less, the full quota of coarse particles will be entrained, but some of the fine particles that should be caught will follow the air in passing around the tip. If the velocity in the sampling tube is greater, more than the proper number of fine particles will be drawn into the sampling tip. To ascertain whether a given sample is representative and meets the foregoing fineness requirement, the fineness should be determined and plotted on the Rosin and Rammler Probability Chart (Fig. 8) as outlined (See Par. 5.4). If the size distribution is incorrect, further adjustment to the sampler velocity is required.

A sample obtained in a given time should be weighed and compared with the weight of coal passing through the fuel transport line. The weight of coal passing through the pipe may be determined from the total coal to the pulverizer as determined in Par. 5.1, divided by number of pipes. The weight of coal passing through the fuel transport line, multiplied by the ratio of the cross-sectional area of the sampling tip to that of the pipe, should be approximately equal to the sample weight. For example, a pulverizer has an outout of 63,000 pounds of coal per hour passing through six lines, each line being 15-1/4 in. inside diameter, with a cross-sectional area of 182.65 sq. in. The standard sampler has a tip opening of 13/16 in. × 3/8. in., and area of 0.305 sq. in.

* Material within quotation marks is from ASTM D 492-48, Method of Sampling Coals.



Copyright ASME International
Provided by IHS under license with ASME
No reproduction or networking permitted without license from IHS
Not for Resale

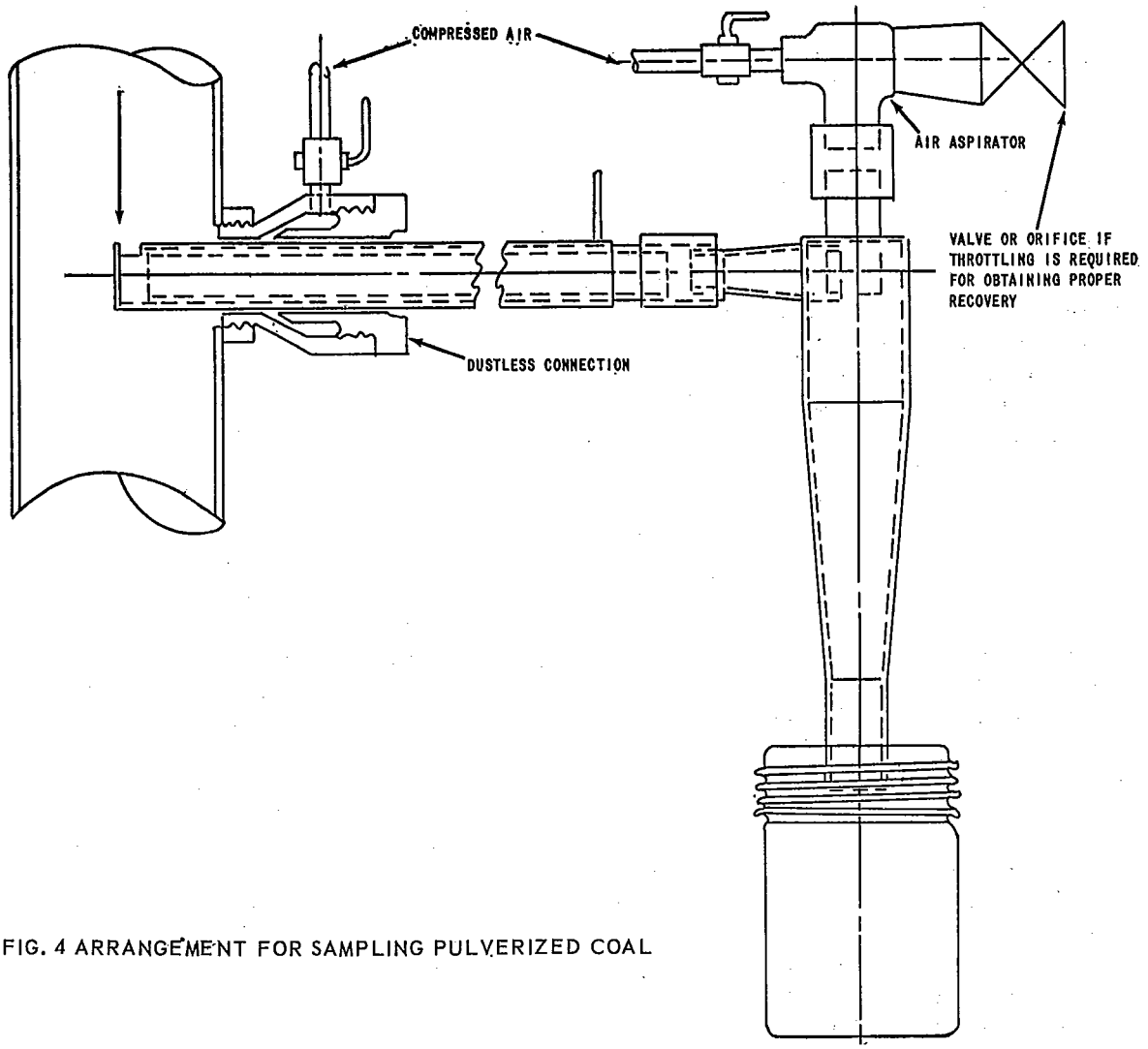


FIG. 4 ARRANGEMENT FOR SAMPLING PULVERIZED COAL

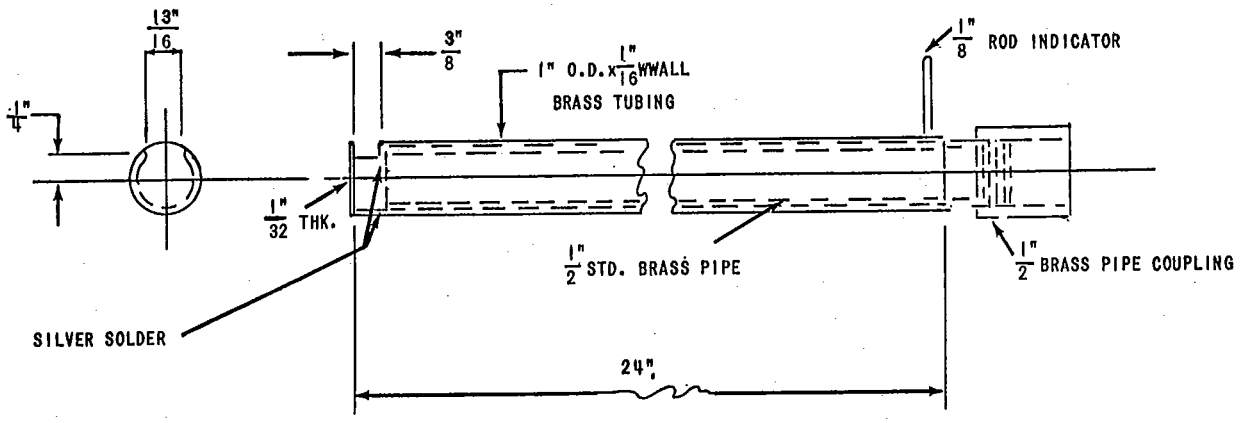


FIG. 5 DETAIL OF SAMPLING TIP



Copyright ASME International
Provided by IHS under license with ASME
No reproduction or networking permitted without license from IHS
Not for Resale

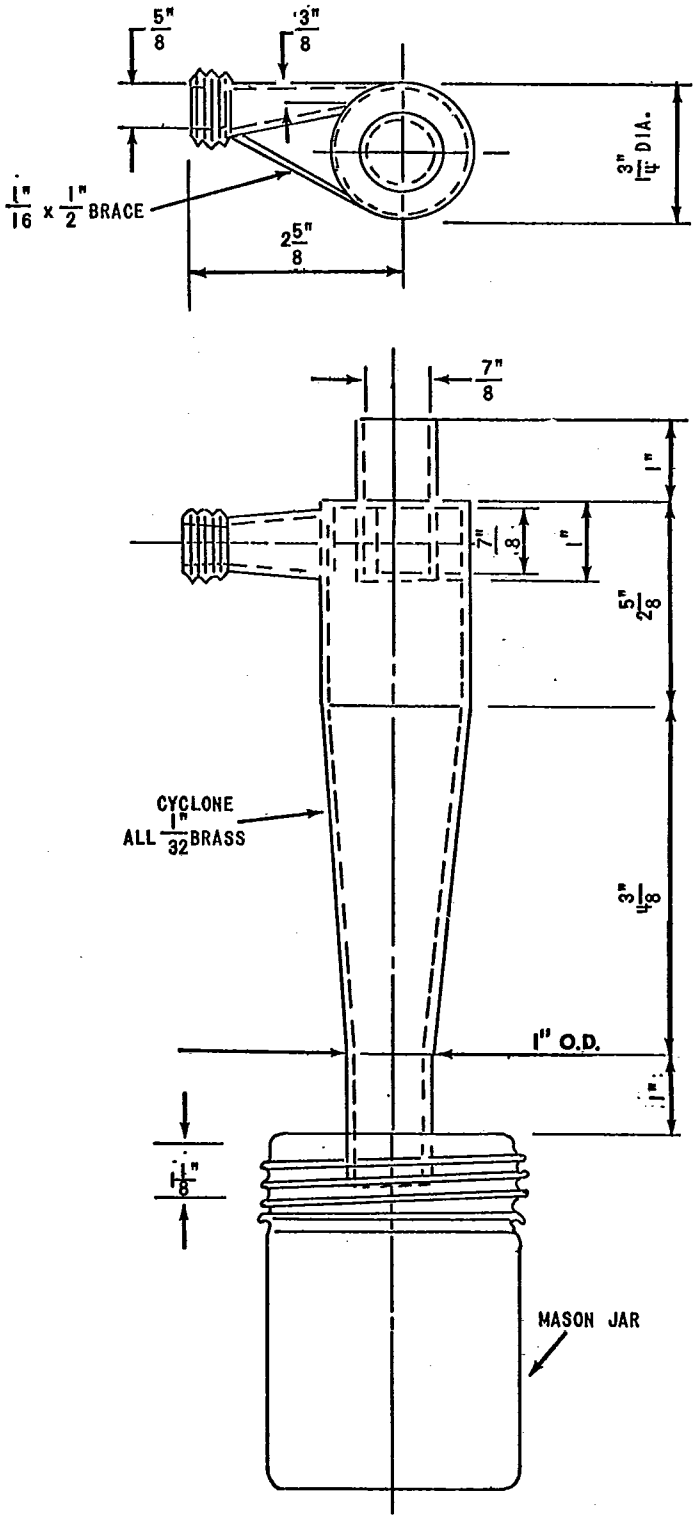


FIG. 6 DETAIL OF CYCLONE COLLECTOR



Copyright ASME International
Provided by IHS under license with ASME
No reproduction or networking permitted without license from IHS
Not for Resale

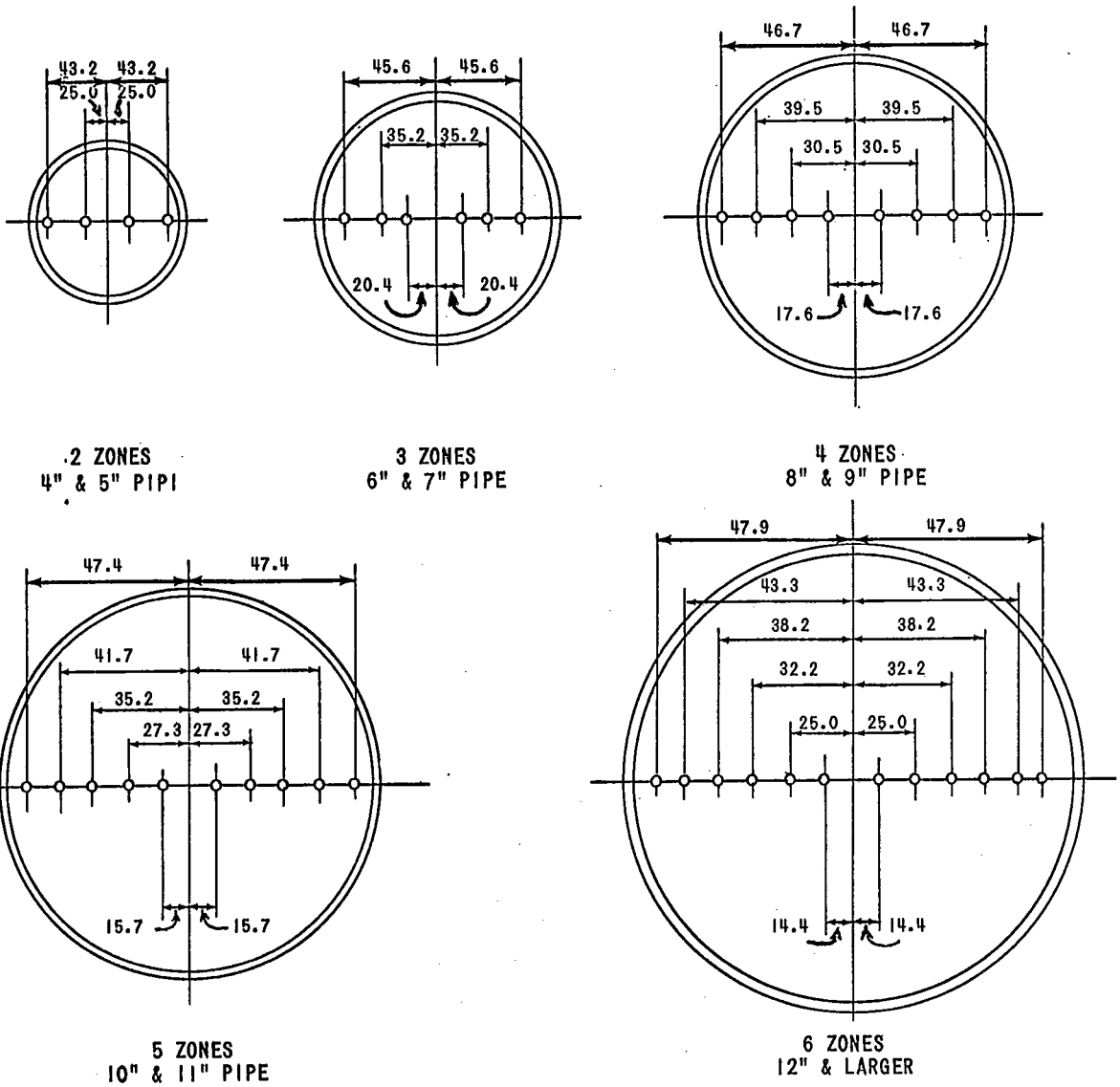


2 ZONES
4" & 5" PIPI

3 ZONES
6" & 7" PIPE

4 ZONES
8" & 9" PIPE

5 ZONES
10" & 11" PIPE

6 ZONES
12" & LARGER

FIG. 7 SAMPLING DIRECT-FIRED PULVERIZED COAL-SAMPLING STATIONS
DIMENSIONS ARE "PERCENT OF PIPE DIA."



Copyright ASME International
Provided by IHS under license with ASME
No reproduction or networking permitted without license from IHS
Not for Resale

# COAL PULVERIZERS

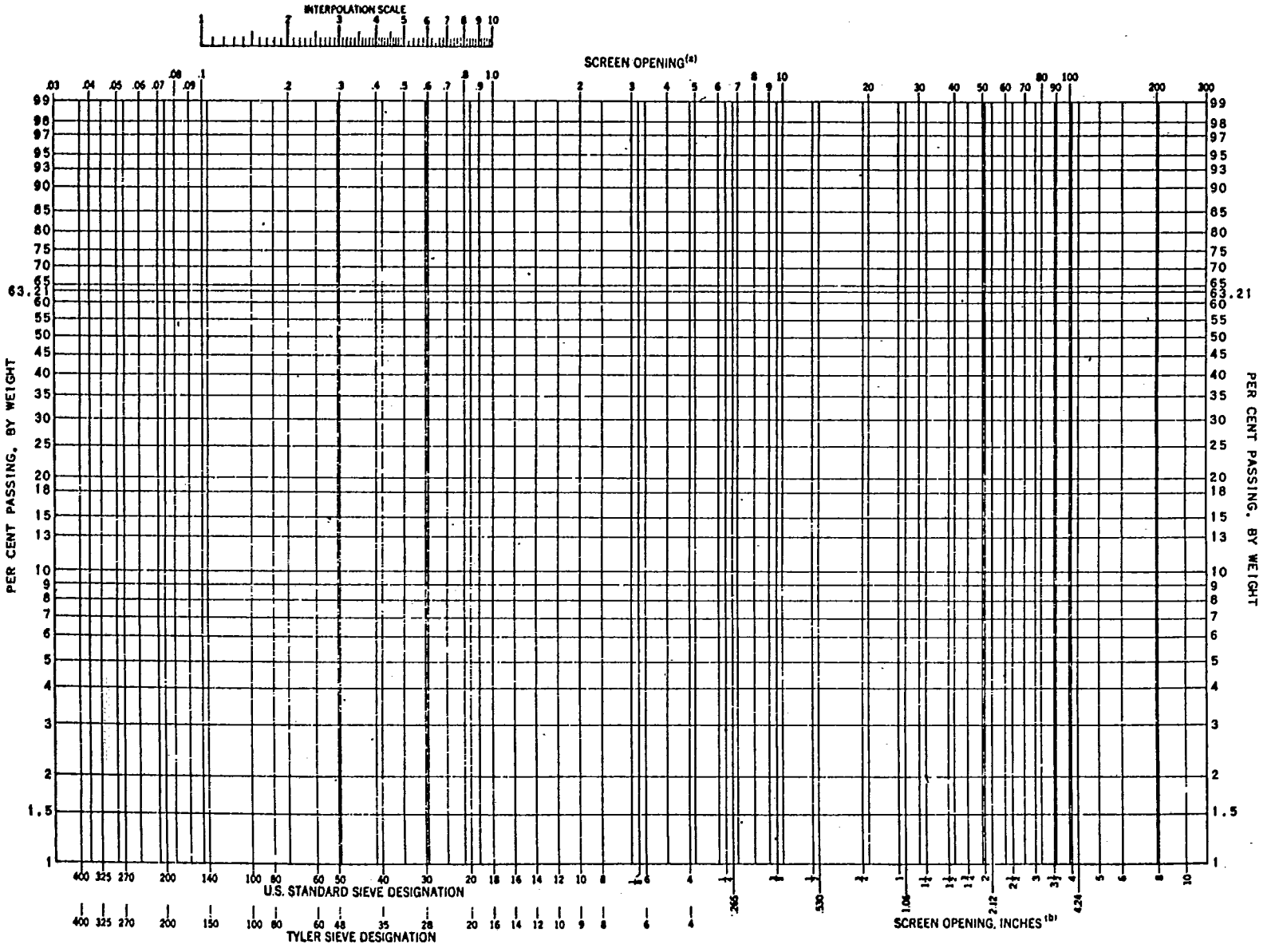


(A) ANY SCALE. IF IN MILLIMETERS, COINCIDES WITH LOWER SCALE.

(B) SQUARE HOLE IF USED AS CONTINUATION OF FINE SERIES.

| | | |
|---|---|---|
| AVERAGE PARTICLE SIZE (INTERSECTION OF SIZE DISTRIBUTION LINE WITH 63.21% PASSING LINE) | $\bar{X}$ | |
| SLOPE OF SIZE DISTRIBUTION LINE (TANGENT OF ANGLE) | N | |

(From: Landers, W.S., and Reid, W.T., A Graphical Form for Applying the Rosin and Rammler Equation to the Size Distribution of Broken Coal: Bureau of Mines Inf. Circular 7346, 1946.)

FIG. 8 GRAPHICAL FORM FOR REPRESENTING DISTRIBUTION OF SIZES OF BROKEN COAL



Copyright ASME International
Provided by IHS under license with ASME
No reproduction or networking permitted without license from IHS
Not for Resale

The coal rate per fuel transport line should be 10,500 pounds per hour. The sample rate per minute for 100 per cent recovery should then be:

$$\text{Sample rate} -- \text{lb per minute}$$

$$= \frac{\frac{63000}{6}}{60} \times \frac{0.305}{182.65} = 0.29$$

Sample for a three minute sampling period should then be 0.87 lb for 100 per cent recovery. If the recovery is between 90 and 110 per cent, the sample shall be considered satisfactory as to rate of collection.

After taking one or two samples and weighing them, the aspirator can be adjusted to give a recovery within the limits of 90 and 110 per cent. Any samples that do not represent 90 – 110 per cent recovery shall be discarded.

If the static pressure in the fuel transport line is so high that the recovery is above 110 per cent with all aspirator air shut off, the flow from the cyclone should be throttled to reduce the recovery to the desired range between 90 and 110 per cent. This can be done by installing a valve or orifice at the cyclone collector vent discharge, (see Fig. 4).

Samples shall be taken by carefully traversing at least two diameters 90 degrees apart. The sampling time at each point shall be approximately five seconds. The pipe is divided by concentric circles into annular bands of equal areas and the sampling stations located at the center of each band on each side of the pipe. Figure 7 indicates the sampling zones for various pipe sizes. If preliminary samples taken at each individual line shows wide variations in fineness and recovery better locations should be used. The location shall preferably be in a vertical pipe as far as possible from preceding bends, changes of cross section or valves. A distance of 7 to 10 times the pipe diameter is desirable. Sampling connections shall be cleared of accumulated coal before taking samples. Also, it should be determined that there is no coating of coal on the inside of the coal pipe.

Precautions should be taken to keep the samples above the dew point during collection. This may be accomplished by heating or insulating the cyclone collector.

When the sampling points are in the pipes and a pulverizer has two or more pipes the total weight of the samples from all the pipes should be compared with total coal weight, as in the example, to check the recovery.

If the air velocity and static pressure in each fuel transport line are very nearly equal, the same cyclone throttle setting and the same air pressure at the aspirator should give about the same sample tip velocity. Then even if the coal is not equally distributed in the several pipes, duplicate cyclone throttle settings should result in samples from each pipe which will be approximately proportional in weight to the coal distribution, but the total should be between 90 and 110 per cent of the proportional total coal flow. Each sample may be screened separately and the weighted average used to obtain the average fineness of the pulverizer output, or the samples may be thoroughly mixed and one screen determination made of the mixture, since the sample from each line represents the proper proportion of the pulverizer output.

In storage type systems pulverized coal samples shall be taken at the inlet of the pulverized coal bin. If the sampling location is under suction, the container should be provided with a cover which can be closed before it is withdrawn from the sampling connection.

The fineness of pulverized coal samples taken in a storage system shall be either the weighted average of the fineness of all samples taken during the test, or the fineness of the composite sample.

*5.4.1 Samples for Moisture and Fineness Determination.* As part of the procedure for fineness determination, the sample is first air dried and the moisture determined and noted. Samples shall be taken every 30 minutes. The procuring of the gross sample and laboratory determination shall be in accordance with the Test Code for Solid Fuels, PTC 3.2, Pars. 89 through 96.

Fineness through at least 50, 100 and 200 mesh U.S. Standard screens should be plotted on a Rosin and Rammler chart (Fig. 8) to determine if samples are representative. Points should fall on a straight line. If the points do not fall on a straight line, the sample is not representative and a new sample shall be obtained.

**5.5 Measurement of Air Quantities.** Measurement of air and/or flue gas flow quantities at various points in the pulverizer system can be made



Copyright ASME International
Provided by IHS under license with ASME
No reproduction or networking permitted without license from IHS
Not for Resale

with permanently installed flow measuring devices located in the air ducts upstream of the pulverizer if calibrated prior to the test. Methods of measurement available for flue gas and air quantity for testing purposes are covered in ASME publication, Fluid Meters – Their Theory and Application – 1959, Chapters B-2 and C-6. Where continual knowledge of such flows is required, flow nozzles, Venturi or thin plate orifices can be installed following procedures outlined in I & A, Measurement of Quantity of Materials, PTC 19.5, Chapter 4.

Prior to the start of any tests, the permanently installed flow measuring devices should be recalibrated to insure their accuracy. To avoid the need for making allowances for any entrained solid or flyash particles, it should be possible to make these checks using clean air. Calibration checks may be made by pitot tube traverses using procedures outlined in the Test Code for Fans, PTC 11, with clean air flowing through the system. Locations suitable for calibration traverses are in lines which normally carry fuel in suspension, or at points such as tempering air ducts, and other alternate locations as indicated in Figs. 1, 2 and 3. Where traverses are made, at least two complete traverses should be made during each run.

If air is admitted to the system at more than one point, the quantity shall be determined at each point.

**5.6 Dust Losses.** Coal dust collected in the dust collector and the vent loss from storage type systems shall be determined by the methods described in the Test Code for Determining Dust Concentration in a Gas Stream, PTC 27.

**5.7 Measurement of Pressures and Temperatures.** Suitable instruments for measuring pressures and temperatures shall be selected, calibrated, and installed as prescribed in the Supplements on Instruments and Apparatus. Readings shall be recorded every 15 minutes and at locations shown on Fig. 1 for direct-fired systems (pressure), Fig. 2 for direct-fired systems (suction), and Fig. 3 for bin or storage type systems.



Copyright ASME International
Provided by IHS under license with ASME
No reproduction or networking permitted without license from IHS
Not for Resale

# SECTION 6, CORRECTIONS

**6.1 Corrections for Variations in Operating Conditions.** The capacity, fineness, and power consumption are affected by variations in the size, moisture, and grindability of the raw coal, and the temperature of air and/or gas introduced into the system. Similarly, the performance of a pulverizer is affected by the physical conditions and adjustments of the system. To translate test results to other standard or guarantee conditions, corrections shall be applied by the use of correction curves which are based on prior test work in which size, moisture, grindability, fineness, and air temperature are varied with other conditions being held constant.

Such curves have a value of unity at some selected standard conditions of raw coal size, moisture, fineness and air temperature. Separate correction curves may be plotted for capacity and power consumption. The individual corrections may then be multiplied together, obtaining a combined correction which should be applied to the actual weight of coal or power consumption to obtain the final corrected value.



Copyright ASME International
Provided by IHS under license with ASME
No reproduction or networking permitted without license from IHS
Not for Resale

# PERFORMANCE TEST CODES

**While providing for exhaustive tests, these Codes are so drawn that selected parts may be used for tests of limited scope.**

**A specially designed binder for holding these pamphlets is available.**

**A complete list of ASME publications will be furnished upon request.**

## PERFORMANCE TEST CODES NOW AVAILABLE

| | |
|---|---|
| PTC 23 – Atmospheric Water Cooling Equipment | (1958) |
| PTC 8.2 – Centrifugal Pumps | (1965) |
| PTC 4.2 – Coal Pulverizers | (1969) |
| PTC 1 – Code on General Instructions | (1945) |
| PTC 2 – Code on Definitions and Values | (1945) |
| PTC 10 – Compressor and Exhausters | (1965) |
| PTC 9 – Displacement Compressors, Vacuum Pumps and Blowers | (1954) |
| PTC 2.1 – Displacement Pumps | (1962) |
| PTC 12.3 – Deaerators | (1958) |
| PTC 27 – Determining Dust Concentration in a Gas Stream | (1957) |
| PTC 28 – Determining the Properties of Fine Particulate Matter | (1965) |
| PTC 3.1 – Diesel and Burner Fuels | (1958) |
| PTC 21 – Dust Separating Apparatus | (1941) |
| PTC 24 – Ejectors and Boosters | (1956) |
| PTC 14 – Evaporating Apparatus | (1955) |
| PTC 12.1 – Feedwater Heaters | (1955) |
| PTC 16 – Gas Producers and Continuous Gas Generators | (1958) |
| PTC 22 – Gas Turbine Power Plants | (1966) |
| PTC 3.3 – Gaseous Fuels | (1969) |
| PTC 18 – Hydraulic Prime Movers | (1949) |
| PTC 17 – Internal Combustion Engines | (1957) |
| PTC 20.2 – Overspeed Trip Systems for Steam Turbine –Generator Units | (1965) |
| PTC 7 – Reciprocating Steam-Driven Displacement Pumps | (1949) |
| PTC 5 – Reciprocating Steam Engines | (1949) |
| PTC 25.2 – Safety and Relief Valves | (1966) |
| PTC 3.2 – Solid Fuels | (1954) |
| PTC 29 – Speed-Governing Systems for Hydraulic Turbine-Generator Units | (1965) |
| PTC 26 – Speed-Governing Systems for Internal Combustion Engine-Generator Units | (1962) |
| PTC 20.1 – Speed-Governing Systems for Steam Turbine-Generator Units | (1958) |
| PTC 12.2 – Steam Condensing Apparatus | (1955) |
| PTC 4.1 – Steam-Generating Units | (1964) |
| PTC 6 – Steam Turbines | (1964) |
| PTC 6A – Appendix A to Test Code for Steam Turbines | (1964) |

Copyright ASME International
Provided by IHS under license with ASME
No reproduction or networking permitted without license from IHS
Not for Resale