ASME PTC*38 80 ■ 0759670 0053804 4 ■

AN AMERICAN NATIONAL STANDARD

ANSI/ASME
PTC 38 - 1980

# Determining the Concentration of Particulate Matter in a Gas Stream

PERFORMANCE TEST CODES

THE AMERICAN SOCIETY OF MECHANICAL ENGINEERS
United Engineering Center
345 East 47th Street New York, N.Y. 10017

Copyright ASME International
Provided by IHS under license with ASME
No reproduction or networking permitted without license from IHS
Not for Resale

# Determining the Concentration of Particulate Matter in a Gas Stream

## ANSI/ASME PTC 38 - 1980

## PERFORMANCE TEST CODES

THE AMERICAN SOCIETY OF MECHANICAL ENGINEERS
United Engineering Center
345 East 47th Street New York, N.Y. 10017

Copyright ASME International
Provided by IHS under license with ASME
No reproduction or networking permitted without license from IHS

Not for Resale

DATE OF ISSUANCE: November 7, 1980

No part of this document may be reproduced in any form,
in an electronic retrieval system or otherwise,
without the prior written permission of the publisher

Copyright © 1980
THE AMERICAN SOCIETY OF MECHANICAL ENGINEERS
All Rights Reserved
Printed in U.S.A.

Copyright ASME International
Provided by IHS under license with ASME
No reproduction or networking permitted without license from IHS

Not for Resale

# FOREWORD

The first of the ASME Power Test Codes related to the abatement of atmospheric pollution was published in 1941 — PTC 21, "Dust-Separating Apparatus." That Code has served for many years as a basic guide for evaluating the performance of apparatus designed for the removal of particulate matter from combustion process flue gases. Experience with that Code identified a difficult measuring problem, a procedure for measuring the concentration of particulate matter in a gas stream. As recognized by those who have had experience with measurements of this type, this involves many practical difficulties. In an effort to alleviate many of these difficulties, the ASME published a Test Code concerned with this subject in 1957 — PTC 27, "Determining Dust Concentration in a Gas Stream." That Code, along with the earlier Code, has served until very recently as the accepted basic guide for both the performance evaluation of particulate removal apparatus and the determination of particulate matter in stack gas emissions for the control of air pollution and the assurance of compliance with applicable governmental emission control regulations.

However, over the years, with the changes in particulate removal technology, such as the great increase in the physical size of much of the apparatus and the gas flows involved, along with the increasing interest in very small particles and the need for accurately measuring much lower particulate matter concentrations, it became apparent that both PTC 21 and PTC 27 were not fully adequate for all the purposes to which they were being applied. Realizing that the various physical and chemical properties of the particulate matter involved were usually a major factor in the performance of the apparatus designed and installed for its removal, the ASME published a Code on this subject in 1965 — PTC 28, "Determining the Properties of Fine Particulate Matter." That Code has become the accepted guide for characterizing the properties of the particulate matter for meeting most of the needs in this area of concern.

With the increasing public concern in the early 1970's for environmental improvement, and in particular air pollution control, new problems became apparent. Many regulatory agencies in all levels of government either issued their own new test procedures for the measurement of particulate matter in stack gases or adopted various test procedures developed by other organizations and often mandated their use for regulatory purposes. Many of these test procedures were later found to be unsuitable, both as to the practicability of their use in the field and the validity of the test data which they produced. A major source of uncertainty in most of these test procedures was the fact that, in addition to measuring the particulate matter actually present in the gas stream, the test apparatus involved also converted certain gaseous components of the gas stream to substances which were collected, measured, and reported as "particulate matter." This situation led to serious problems in the establishment of valid criteria for evaluating the performance of emission control apparatus for operational, commercial, and regulatory purposes.

In an effort to eliminate as many of these problems as possible, ASME Performance Test Code Committee 38 was organized in 1972 and given the task of developing test codes for the measurement of fine particulate matter which would employ the best practical techniques of currently known technology to meet the increasingly stringent requirements of those air pollu-



Copyright ASME International
Provided by IHS under license with ASME
No reproduction or networking permitted without license from IHS
Not for Resale

tion abatement activities concerned with the control of particulate emissions resulting from combustion processes.

This Test Code is the result of several years of intensive effort by that Committee, with the cooperation and assistance of other organizations, to evaluate the problems involved and the technology available for accurately determining the concentration of particulate matter in a gas stream by practicable means. Complete solutions to all problems involved in this complex field of testing cannot be provided in a generalized Code. However, this Code is believed to be the best compendium of data and guidelines available for this purpose and it covers the vast majority of cases encountered. If properly used, it will provide the most valid test results possible.

PTC 38 on Determining the Concentration of Particulate Matter supersedes PTC 27 on Determining Dust Concentration in a Gas Stream and should be used in conjunction with the revised PTC 21 on Dust Separating Apparatus.

This Code was approved by the Performance Test Codes Supervisory Committee on March 20, 1980. It was approved by ANSI as an American National Standard on May 15, 1980.



Copyright ASME International
Provided by IHS under license with ASME
No reproduction or networking permitted without license from IHS
Not for Resale

# PERSONNEL OF PERFORMANCE TEST CODE COMMITTEE NO. 38 ON MEASUREMENT OF FINE PARTICULATE MATTER

W. A. Crandall, *Chairman*
J. D. Sensenbaugh, *Secretary*

W. E. Barkovitz, former Project Manager, Air Quality Division, American Standard, Incorporated, (Retired), Detroit, Michigan 48232

R. O. Blosser, Project Planning, National Council of the Paper Industry for Air and Steam Improvement, Incorporated, 260 Madison Avenue, New York, New York 10016

J. O. Burckle, Office of Air Programs, U.S. Environmental Protection Agency, IER Laboratory, Research Triangle Park, North Carolina 27711

D. Campbell, Manager, Energy Utilization Division, PSE&G Research Corp., Public Service Electric & Gas Company, 200 Boyden Avenue, Maplewood, New Jersey 07040

E. L. Coe, Jr., Manager, Advanced Technology, Western Precipitation Division, Joy Manufacturing Company, 4565 Colorado Boulevard, Los Angeles, California 90039

W. A. Crandall, Research Program Director, PSE&G Research Corp., Public Service Electric & Gas Company, 80 Park Place, Newark, New Jersey 07101

J. E. DeLange, Supervising Engineer, Detroit Edison Company, 2000 Second Avenue, Detroit, Michigan 48226

J. A. Dorsey, Office of Air Programs, U.S. Environmental Protection Agency, IER Laboratory, Research Triangle Park, North Carolina 27711

R. B. Engdahl, former Staff Engineer, Battelle Memorial Institute, (Retired), 505 King Avenue, Columbus, Ohio 43201

C. A. Gallaer, Vice President, Engineering Operations, Air Pollution Control Division, Wheelabrator-Frye, Incorporated, 600 Grant Street, Pittsburgh, Pennsylvania 15216

J. Greco, Chief Consulting Engineer, Ebasco Services Incorporated, 145 Technology Park, Norcross, Georgia 30092

V. W. Hanson, Director of Emission Studies, Swanson Environmental, Incorporated, 29623 Northwestern Highway, Southfield, Michigan 48034

B. F. Harper, Assistant Superintendent, Philadelphia Electric Company, 2301 Market Street, Philadelphia, Pennsylvania 19101

D. B. Harris, Office of Air Programs, U.S. Environmental Protection Agency, IER Laboratory, Research Triangle Park, North Carolina 27711

W. C. L. Hemeon, Director, Hemeon Associates, 6025 Broad Street Mall, Pittsburgh, Pennsylvania 15206

R. H. Johnson, Manager, Combustion Emissions Engineering, General Electric Company, Gas Turbine Division, 1 River Road, Building 53, Schenectady, New York 12345

J. Katz, President, Precipitator Technology, Incorporated, 4525 Main Street, Munhall, Pennsylvania 15120

E. D. Kennedy, Technical Division Supervisor, Monsanto Enviro-Chem Systems, Incorporated, 800 North Lindbergh Boulevard, St. Louis, Missouri 63166

R. P. Perkins, Senior Consultant—Power, E. I. duPont, deNemours & Company, Louviers Building, Wilmington, Delaware 19898



Copyright ASME International
Provided by IHS under license with ASME
No reproduction or networking permitted without license from IHS
Not for Resale

A. A. Peterson, Manager of Physical Studies, UOP—Air Correction Division, Tokeneke Road, Darien, Connecticut 06820

A. L. Plumley, Manager—Chemical Process Consultant, Combustion Engineering, Incorporated, 1000 Prospect Hill Road, Windsor, Connecticut 06095

J. D. Sensenbaugh, Manager, Chicago Environmental Control, Kaiser Engineers, Incorporated, 35 East Wacker Drive, Chicago, Illinois 60601

E. P. Stastny, Manager, International Development, Environmental Elements Corporation, P.O. Box 1318, Baltimore, Maryland 21203

C. J. Stillwagon, Results Engineer, Babcock & Wilcox Company, 20 South Van Buren Avenue, Barberton, Ohio 44203

N. R. Troxel, Manager of Cottrell Environmental Sciences, Subsidiary of Research-Cottrell, Incorporated, P.O. Box 1500, Somerville, New Jersey 08876

J. G. Wagner, Senior Supervising Engineer, Union Electric Company, P.O. Box 149, St. Louis, Missouri 63122

The following former committee members also made significant contributions to the preparation of this Code prior to their retirement from active committee work. Recognition is hereby extended to them for their past efforts.

J. A. Brink, Jr., President and Chairman of the Board, Brink Associates, Incorporated, 1243 Highland Drive, Moscow, Idaho 83843

H. M. Chapman, formerly with the Environmental Quality Control Division, Bethlehem Steel Corporation, Bethlehem, Pennsylvania 18106

H. C. Dohrmann (Deceased), former Vice President, Research & Development, Buell Division of Envirotech Corporation, 253 North Fourth Street, Lebanon, Pennsylvania 17042

S. L. Morse, former Manager, FPGD Results Engineering, (Retired), Babcock & Wilcox Company, 20 South Van Buren Avenue, Barberton, Ohio 44203

M. A. Stiller, Manager, Nuclear Operation Group, Union Electric Company, P.O. Box 149, St. Louis, Missouri 63122

A. B. Walker, Vice President, Cottrell Environmental Systems, Division of Research-Cottrell, Incorporated, P.O. Box 750, Bound Brook, New Jersey 08805



Copyright ASME International
Provided by IHS under license with ASME
No reproduction or networking permitted without license from IHS
Not for Resale

## Personnel of the Performance Test Codes Supervisory Committee

J. H. Fernandes, *Chairman*
C. B. Scharp, *Vice-Chairman*

D. W. Anacki
R. P. Benedict
K. C. Cotton
W. A. Crandall
R. C. Dannettel
J. S. Davis
V. F. Estcourt
W. L. Garvin
A. S. Grimes
K. G. Grothues
R. Jorgensen
E. L. Knoedler
W. C. Krutzsch
C. A. Larson
A. Lechner
P. Leung
F. H. Light
S. W. Lovejoy
W. G. McLean
J. W. Murdock
L. C. Neale
R. J. Peyton
W. A. Pollock
J. F. Sebald
J. C. Westcott



Copyright ASME International
Provided by IHS under license with ASME
No reproduction or networking permitted without license from IHS
Not for Resale

# CONTENTS


| | | |
|---|---|---|
| **Section 0** | **Introduction** | 1 |
| **Section 1** | **Object and Scope** | 2 |
| 1.1 | Object of Test | 2 |
| 1.2 | Scope of Test | 2 |
| 1.21 | Concentration of Particulate Matter | 2 |
| 1.22 | Gas Flow Measurement | 2 |
| 1.23 | Particle Size Measurement | 2 |
| **Section 2** | **Description and Definitions of Terms** | 3 |
| 2.1 | Description and Definitions of Terms | 3 |
| 2.2 | Particulate Matter | 3 |
| 2.3 | Test and Run | 3 |
| 2.4 | Nomenclature and Units of Measurement | 3 |
| 2.5 | Table of Terms | 6 |
| **Section 3** | **Guiding Principles** | 7 |
| 3.1 | Items of Agreement | 7 |
| 3.2 | Tolerances | 7 |
| 3.3 | Witnesses to a Test | 7 |
| 3.4 | Preliminary Runs | 7 |
| 3.5 | Test Procedures—General Principles | 8 |
| 3.51 | Sampling Location | 8 |
| 3.52 | Flow Measurement | 9 |
| 3.53 | Number and Distribution of Sample Points | 9 |
| 3.54 | Constancy of Test Conditions | 9 |
| 3.55 | Duration of Runs | 9 |
| 3.56 | Frequency of Readings | 10 |
| 3.57 | Procedure for Operating Samplers | 10 |
| **Section 4** | **Instruments and Methods of Measurement** | 12 |
| 4.1 | Instruments and Their Use | 12 |
| 4.11 | Necessary Instruments | 12 |
| 4.12 | Isokinetic Sampling | 12 |
| 4.2 | Description of Sampling Train | 12 |
| 4.21 | Filtration Section | 12 |
| 4.22 | Flow Measurement and Control Section | 13 |
| 4.3 | Discussion of Sampling Trains and Their Components | 13 |
| 4.31 | Sampling Nozzle | 13 |
| 4.32a | Filter Location and Design | 13 |




Copyright ASME International
Provided by IHS under license with ASME
No reproduction or networking permitted without license from IHS
Not for Resale

| | | |
|---|---|---|
| 4.32b | Particulate Matter Filter Design | 14 |
| 4.33 | Gas Flow Metering | 14 |
| 4.33a | Gas Flow Metering Devices | 14 |
| 4.33b | Regulation of Sampling Rate | 15 |
| 4.33c | Use of Metering Devices | 15 |
| 4.34 | Flow-Inducing Devices | 15 |
| 4.35 | Manometers | 16 |
| 4.36 | Condenser | 16 |
| 4.37 | Thermometers and Thermocouples | 16 |
| 4.4 | Measurement of Gas Velocity | 16 |
| 4.41 | Pitot Tubes | 16 |
| 4.42 | Velocity Measurements | 16 |
| 4.43 | Time Measurement | 17 |
| 4.5 | Filter Handling and Treatment of Collected Particulate Matter Samples | 17 |
| 4.51 | Filter Handling | 17 |
| 4.52 | Weighing of Filters | 18 |
| 4.53 | Drying of Filters | 18 |
| 4.54 | Removal and Processing of Deposits in Sample Probe | 18 |
| 4.55 | Total Sample Mass | 18 |
| 4.6 | Selection and Designation of Instrumentation and Methods of Measurement to Be Used in Tests | 18 |
| 4.61 | Designation of Test Apparatus | 18 |
| 4.62 | Designation of Methods of Test | 19 |
| **Section 5** | **Computations of Results** | 20 |
| 5.1 | Density of Dry Flue Gas | 20 |
| 5.2 | Moisture in Flue Gas | 20 |
| 5.3 | Density of Wet Flue Gas | 23 |
| 5.4 | Velocity Head Measurement and Velocity Reading | 24 |
| 5.5 | Isokinetic Sampling | 24 |
| 5.6 | Measured Flue Gas Sampled on a Dry or Wet Basis | 26 |
| 5.7 | Particulate Matter Concentration | 26 |
| **Section 6** | **Report of Results** | 27 |
| 6.1 | Importance of Reports | 27 |
| 6.2 | Reports and Their Content | 27 |
| 6.3 | Recommended Reporting Procedures | 27 |
| 6.31 | Presurvey Report | 27 |
| 6.32 | Gas Flow Measurement, Sampling, and Analytical Data | 28 |
| 6.33 | Operating Data | 28 |
| 6.34 | Calculations | 28 |
| 6.35 | Emission Data | 28 |
| 6.36 | Responsibility for Test Results | 28 |
| **Section 7** | **Bibliography** | 42 |
| **Section 8** | **Appendix** | 44 |
| 8.1 | Index to Appendix | 44 |




Copyright ASME International
Provided by IHS under license with ASME
No reproduction or networking permitted without license from IHS

Not for Resale

AN AMERICAN NATIONAL STANDARD

# ASME PERFORMANCE TEST CODE

# Code for

# DETERMINING THE CONCENTRATION OF PARTICULATE MATTER IN A GAS STREAM

## SECTION 0 – INTRODUCTION

**0.1** This Code sets forth recommended procedures and devices for the measurement of particulate matter suspended in gases flowing in a duct or stack. While this Code is oriented toward gases resulting from combustion processes, its use for other gas streams is not precluded if test parameters are compatible with those discussed here in.

**0.2** *To obtain valid test results it is absolutely necessary that there is a full understanding of the problems involved in each test situation and that every effort is made to select and properly employ the appropriate procedures and apparatus for each case. Therefore, it is mandatory that this Code be studied in its entirety, with particular attention being given to the Appendix, Section 8, before planning any test program.*

**0.3** As this Code describes various options in respect to test apparatus and methodology which is appropriate to various test situations, the choice between suitable options must be made both on the basis of the nature of the test and the regulatory and/or contractual restrictions which may be a part of the requirements for conducting the tests.

Therefore, when the use of this Code is specified in commercial agreements regarding system performance evaluation or in source emission control regulations, either the appropriate approved options should be clearly defined or the mechanism stated for establishing the approved option(s) appropriate to the particular test situation.

**0.4** Unless otherwise specified, all references to other Codes refer to ASME Performance Test Codes.

**0.5** Any test to determine the particulate matter concentration in a gas stream should comply with the Code on General Instructions. In particular, the test objectives shall be agreed upon by the interested parties before the test is performed.

**0.6** Unless otherwise indicated, the technical terms and numerical constants which are used in this Code have the meanings and values as defined in Section 2.

**0.7** Section 4 of this Code on Instruments and Methods of Measurement describes instruments and methods which are likely to be required and discusses their application, calibration, sensitivity, accuracy, etc. Performance Test Code 19, Supplements on Instruments and Apparatus, referred to in this Code are designated by the abbreviation, I & A.



Copyright ASME International
Provided by IHS under license with ASME
No reproduction or networking permitted without license from IHS
Not for Resale

# SECTION 1 – OBJECT AND SCOPE

## 1.1 OBJECT OF TEST

The Test object is to determine the weight rate of flow of particulate matter carried in a gas stream confined in a duct or stack. The test object is accomplished by (a) measurement of average weight concentrations of particulate matter in the gas stream, and (b) determination of total gas flow rate.

Data thus obtained may be utilized for such purposes as the performance evaluation of gas cleaning apparatus/systems, compliance testing in conjunction with emission control and performance regulations promulgated by regulatory agencies, etc.

## 1.2 SCOPE OF TEST

### 1.21 Concentration of Particulate Matter

This Code prescribes methods for measuring the average weight concentration of particulate matter carried in a gas stream. Measurement on any other basis (e.g., particle count, dust spot, opacity, etc.) is beyond the scope of this Code.

### 1.22 Gas Flow Measurement

Determination of total gas flow may be based on measurement of velocity pressure and gas density at representative points in the duct cross section, on actual combustion calculations (stoichiometry), or by data from calibrated gas metering devices. Alternate methods for measuring total gas flow rate may be used by agreement of all the concerned parties.

### 1.23 Particle Size Measurement

The scope of this Code does not include the measurement of particle size distribution. Test procedures for this purpose are contained in ASME Performance Test Code 28. While some in situ type samplers designed for the collection of particulate matter in various size fractions may have a limited capability for determining total particulate matter concentrations in a gas sample, data thus obtained should only be used for the measurement of particle size distribution and not for the weight rate of flow of particulate matter in the gas stream.



Copyright ASME International
Provided by IHS under license with ASME
No reproduction or networking permitted without license from IHS
Not for Resale

# SECTION 2 – DESCRIPTION AND DEFINITIONS OF TERMS

2.1 This Code specifies the test procedures to be employed in the determination of the concentration of particulate matter in a gas stream and the total flow rate of the gas. The terms used in connection with the test procedures are defined by the following:

## 2.2 PARTICULATE MATTER

For the purpose of this Code, "particulate matter" is defined as finely divided material, other than uncombined water, suspended in a gas stream at the prevailing temperature and pressure of the gas stream under consideration — such material being separable from the gas phase by filtration when using the agreed upon sampling apparatus and procedures described in this Code.

2.21 This definition is intended to exclude from consideration those substances which may be formed outside the stack or duct or in a sampling train on cooling the gas stream to a lower temperature than prevails in the channeled gas.

2.22 The measurement of particulate matter which may form in the outside atmosphere requires techniques which are outside the scope of this Code.

## 2.3 TEST AND RUN

2.31 A "Test," as applied in this Code, means the entire investigation.

2.32 A "Run" is a subdivision of a "Test" consisting of a complete set of observations and recorded data taken at regular intervals for a period of time during which sampling of the gas stream was conducted.

## 2.4 NOMENCLATURE AND UNITS OF MEASUREMENT

2.41 The nature of this Code is such that it will often find application in conjunction with existing technical specifications, commercial agreements, and governmental regulations. The terminology and the units of measurement contained therein may range from those considered to be the "accepted standards" for the intended purposes of such documents at the time they were written prior to the promulgation of this Code to those based upon the SI System which may be written subsequent to the promulgation of this Code.

2.42 It is preferred, in accordance with ASME policy, that the SI System for units of measurements be utilized whenever practicable in the application of this Code. However, it is realized that, at the time immediately following its promulgation, its major applications will be in conjunction with specifications, agreements, and regulations utilizing the previously acceptable nomenclature and units of measurement. Therefore, to make this Code readily applicable to present and future situations, the formulae, tables and graphs and calculation of results are stated herein in accordance with presently existing good engineering practices — with provisions being made for the conversion of the Code to the SI System by the inclusion of the definitions of pertinent SI units of measurement, conversion factors from other units of measurement, and general guidance in respect to the utilization of the SI System.

2.43 While a major effort has been made to standardize the nomenclature and the related symbols used throughout the Code, the unique nature of certain calculations involved requires that special symbol notations be employed in these calculations to avoid confusion. Hence, both a general system of nomenclature and related symbolic notation is presented in this Section and, for the special cases where those are inadequate or inappropriate for special purposes, specialized tables of nomenclature are provided where applicable in this Code.

2.44 The use of the SI Units with this Code is based upon ASME Guide SI-1, "Orientation Guide for SI (Metric) Units," Eighth Edition (Reference [11] in Section 7). Excerpts from this publication are printed in Appendix L of the Code to provide readily available guidance with re-



Copyright ASME International
Provided by IHS under license with ASME
No reproduction or networking permitted without license from IHS
Not for Resale

## Table 2-1 TABLE OF TERMS

| Term | Symbol | Description | Conventional Units | | SI Units | | Conversion Factors | |
|---|---|---|---|---|---|---|---|---|
| | | | Units | Name of Unit | Units | Name of Unit | Conventional to SI | |
| Length | *L* | Dimension or Distance | in. | inch | m | meter | 2.540 | E−02 |
| | | | ft | foot | m | meter | 3.048 | E−01 |
| | | | mm | millimeter | m | meter | 1.000 | E−03 |
| | | | cm | centimeter | m | meter | 1.000 | E−02 |
| Mass | Wt | Weight of material | lb | pound mass (avoir) | kg | kilogram | 4.536 | E−01 |
| | | | ton | ton | kg | kilogram | 9.072 | E+02 |
| | | | gr | grain (avoir) | kg | kilogram | 6.480 | E−05 |
| | | | gm | gram | kg | kilogram | 1.000 | E−03 |
| Time | *t* | Duration of time | sec | second | s | second | 1.000 | E+00 |
| | | | min | minute | s | second | 6.000 | E+01 |
| | | | hr | hour | s | second | 3.6 | E+03 |
| Gravitational Constant | *g* | Gravitational Constant | g | gravitational constant | | | | |
| | | | ft/sec$^2$ | 32.17 ft/sec$^2$ | m/s$^2$ | meters per second$^2$ | 9807 | E+00 |
| | | | cm/sec$^2$ | 980 cm/sec$^2$ | m/s$^2$ | meters per second$^2$ | 9807 | E+00 |
| Force | *F* | Force | lb | pound force | N | Newton, (kg • m/s$^2$) | 4.448 | E+00 |
| | | | pdl | poundal | N | Newton, (kg • m/s$^2$) | 1.383 | E−01 |
| | | | $kg_f$ | kilogram force | N | Newton, (kg • m/s$^2$) | 9.807 | E+00 |
| | | | dyne | dyne | N | Newton, (kg • m/s$^2$) | 1.000 | E−02 |
| Area | *A* | Cross-sectional area | in.$^2$ | square inches | m$^2$ | square meters | 6.452 | E−04 |
| | | | ft$^2$ | square feet | m$^2$ | square meters | 9.290 | E−02 |
| | | | cm$^2$ | square centimeters | m$^2$ | square meters | 1.000 | E−04 |
| Volume | Vol | Volume, space or material | ft$^3$ | cubic feet | m$^3$ | cubic meters | 2.832 | E−02 |
| | | | gal | gallons (U.S.) | m$^3$ | cubic meters | 3.785 | E−03 |
| | | | l | liter | m$^3$ | cubic meters | 1.000 | E−03 |
| | | | ml | milliliter | m$^3$ | cubic meters | 1.000 | E−06 |
| Particle Size | *D* | Diameter of particle | μm | micron or micrometer | m | meter | 1.000 | E−06 |
| Velocity | *V* | Velocity, object or material | ft/sec | feet per second | m/s | meters per second | 3.048 | E−01 |
| | | | in./sec | inches per second | m/s | meters per second | 2.540 | E−02 |
| | | | cm/sec | centimeters per second | m/s | meters per second | 1.000 | E−02 |
| Flowrate, volumetric | *Q* | Volumetric flowrate | CFM | cubic feet per minute | m$^3$/s | cubic meters per second | 4.720 | E−04 |
| | | | GPM | gallons per minute | m$^3$/s | cubic meters per second | 6.308 | E−05 |
| Flowrate, mass | *G* | Mass flowrate | lb/hr | pounds per hour | kg/s | kilograms per second | 1.260 | E−04 |
| | | | lb/min | pounds per minute | kg/s | kilograms per second | 7.560 | E−03 |
| Temperature | *T* | Temperature, object or material | °F | degrees Fahrenheit | °C | degreees Celsius | °F − 32/1.8 | |
| | | | °R | degrees Rankine | °C | degrees Celsius | °R/1.8 | |
| | | | °C | degrees Centigrade | °C | degrees Celsius | 1.000 | |
| | | | °K | degrees Kelvin | °C | degrees Celsius | °K − 273.15 | |





Copyright ASME International
Provided by IHS under license with ASME
No reproduction or networking permitted without license from IHS

Not for Resale

## Table 2-1 TABLE OF TERMS (Cont'd)

| Term | Symbol | Description | Conventional Units | | SI Units | | Conversion Factors | |
|---|---|---|---|---|---|---|---|---|
| | | | Units | Name of Unit | Units | Name of Unit | Conventional to SI | |
| Temperature Interval | $\Delta T$ | Temperature difference | °F | degrees Fahrenheit | °C | degrees Celsius | 5.556 | E−01 |
| | | | °C | degrees Centigrade | °C | degrees Celsius | 1.000 | E−00 |
| Pressure | $P$ | Pressure, gas or liquid | lb/in.$^2$ | pounds per square inch | Pa | Pascals, (N/m$^2$) | 6.895 | E+03 |
| | | | in. $H_2O$ | inches water gage | Pa | Pascals, (N/m$^2$) | 2.491 | E+02 |
| | | | in. Hg | inches Hg manometer | Pa | Pascals, (N/m$^2$) | 3.387 | E+03 |
| | | | mm Hg | millimeters Hg manometer | Pa | Pascals, (N/m$^2$) | 1.333 | E+02 |
| | | | Atm | Atmospheres | Pa | Pascals, (N/m$^2$) | 1.014 | E+05 |
| | | | bar | bars | Pa | Pascals, (N/m$^2$) | 1.000 | E+05 |
| Density | $\rho$ | Density of material | lb/ft$^3$ | pounds per cubic foot | kg/m$^3$ | kilograms per cubic meter | 1.602 | E+01 |
| | | | lb/gal | pounds per gallon | kg/m$^3$ | kilograms per cubic meter | 1.198 | E+02 |
| | | | gm/cm$^3$ | grams per cubic centimeter | kg/m$^3$ | kilograms per cubic meter | 1.000 | E−03 |
| Viscosity | $\eta$ | Viscosity, gas or liquid | poise | poise | P | poise, (0.1 Pa • s) | 1.000 | E+00 |
| Concentration | Conc | Weight of material in volume of gas or liquid | lb/ft$^3$ | pounds per cubic foot | kg/m$^3$ | kilograms per cubic meter | 1.602 | E+01 |
| | | | lb/gal | pounds per gallon | kg/m$^3$ | kilograms per cubic meter | 1.198 | E+02 |
| | | | gm/cm$^3$ | milligrams per cubic meter | kg/m$^3$ | kilograms per cbuic meter | 1.000 | E−06 |
| Energy, thermal | $HV$ | Heating value of fuel | Btu | British Thermal Unit | J, or N • m | Joule or Newton meter | 1.055 | E+03 |
| | | | Cal. | calorie | J, or N • m | Joule or Newton meter | 4.186 | E+00 |
| Energy, electrical | KWH | Electrical energy | kWhr | kilowatt hour | J, or N • m | Joule or Newton meter | 3.600 | E+06 |
| Electrical Power | W | Electrical power | W | watt | W, or J/s | Watts or Joules per second | 1.000 | E+00 |





Copyright ASME International
Provided by IHS under license with ASME
No reproduction or networking permitted without license from IHS
Not for Resale

ASME PTC*38 80 ■ 0759670 0053819 6 ■



spect to the basic system of units and their use. A thorough understanding of all the material contained in ASME Guide SI-1 is essential to the proper use of the SI System.

**2.45** To maximize the usefulness and applicability of test results in the future, it is recommended that all test results be reported, whenever possible, in SI Units as well as in the system of units originally deemed applicable for the specific test(s) involved.

## 2.5 TABLE OF TERMS

**2.51** Table 2-1 contains a listing of the terminology and nomenclature used generally throughout the Code. Conversion factors are provided for conversion of the stated units of measurement to the SI System of Units.

**2.52** Where the need for different systems of nomenclature exists within the Code to define unique test parameters, the required nomenclature is listed in Tables accompanying the calculation procedures involved. Provisions have been made for conversion of the units used to the SI System.

This Table contains a listing of the terms commonly used in the measurement of the concentration of particulate matter in a gas stream. The units of measurement given are those in general use at the time this Code was written. The appropriate SI units of measurements, to be substituted for the given units, are also given along with conversion factors for converting from the conventional units to the SI units of measurement.

In actual practice, these terms are usually used with subscripts in formulae, graphs, and calculations to indicate their sepcific meaning for particular usage situations. The nature of the subscripts may vary greatly, depending on the source of the publication and the nature of the measurements involved. Hence, no standardized system for subscripts is included in this Code. Whenever subscripts are used, however, their meanings should be clearly indicated.

*Note 1:* The column of Conversion Factors contains, on the left, the numerical value to be used in exponential notation and, on the right, the exponent for a base of 10. For example: 2.540 E - 02 signifies that the factor is $2.540 \times 10^{-2}$ or 0.0254.

*Note 2:* While it is realized that the term "mass" is more strictly correct than the term "weight" when reforming to such units of measurement as pounds mass, kilograms, grains, etc., the more commonly used term "weight" is used frequently in this Code to avoid confusion for those using it who are much more familir with the generally used term for this parameter. This does not preclude the desirable practice of using the term "mass" vice "weight" whenever practicable and understandable.



Copyright ASME International
Provided by IHS under license with ASME
No reproduction or networking permitted without license from IHS
Not for Resale

# SECTION 3 – GUIDING PRINCIPLES

## 3.1 ITEMS OF AGREEMENT

**3.11** Where the purpose of a test involves the interests of two or more parties, an agreement must be formulated in advance of testing.

The following is a checklist of pertinent items upon which agreement should be reached by the parties to the test:

(a) The object or objects of the test (see paragraph 1.1).

(b) Date and time of the test.

(c) The number, type, and location of sample trains and other instruments where alternates are permitted (see paragraphs 3.51 and 3.53) and the test procedures to be employed in their use.

(d) Number and location of all sampling points.

(e) Method of determining and maintaining constancy of process conditions during the test (see paragraph 3.54).

(f) Gas flow rates in the duct(s) or stack to be tested.

(g) Method of determining total gas flow; whether by combustion calculations, by process calculations, or by velocity head measurements (see paragraph 3.52).

(h) Number and duration of runs (see paragraph 3.55).

(i) Duration of steady state operation before sampling is commenced (see paragraph 3.54) and, in the case of new or modified installations, the minimal "shakedown" operational period required prior to testing.

(j) Designation of the procedures for making calibrations, weighings, and other appropriate measurements, and selection of the laboratories for carrying out various test procedures.

(k) Maximum deviations of test measurements and conditions between replicate runs that will be acceptable, and the requirements for additional runs where their deviations are exceeded.

**3.12** During actual site testing, the method of determining the particulate matter concentration of gases must be adapted to the conditions of constructions and operation encountered in each particular case. Unfortunately, ideal conditions are seldom found in field testing. Therefore, the parties to the test should investigate the field conditions thoroughly before making arrangements for conducting a test.

## 3.2 TOLERANCES

This Code specified the desired conditions and procedures for obtaining valid and accurate test results but the definition of uncertainties in respect to overall test accuracy and repeatability is not within its scope.

Ideal test conditions may be unobtainable in many test situations. This Code provides guidance for dealing with such non-ideal conditions so as to maximize the accuracy of the test results. Provisions to allow for uncertainties in measurements, resulting from less-than-desirable test conditions, must be agreed upon in advance by all parties to the test. This agreement should be clearly stated in the test report.

## 3.3 WITNESSES TO A TEST

**3.31** Accredited representatives of all parties concerned should be present to witness that all aspects of the test are conducted in accordance with the agreements.

**3.32** Should an accredited representative establish to all parties that the observed test procedures and conditions will invalidate or prejudice the test objectives, that portion of the test results or the test run itself shall be deleted.

## 3.4 PRELIMINARY RUNS

One or more preliminary runs may be conducted for such purposes as checking instruments and procedures and/or making minor adjustments, the need for which was not evident during the preparations for the test. Any preliminary run, when completed, may be declared, by mutual agreement, to be an official run.



Copyright ASME International
Provided by IHS under license with ASME
No reproduction or networking permitted without license from IHS
Not for Resale

## 3.5 TEST PROCEDURES–GENERAL PRINCIPLES

The major points in connection with the test (see paragraph 3.11) having been agreed upon, it is then necessary to prepare the detailed procedure for the test.

In planning the test, attention should be accorded to the problem of obtaining a truly representative sample over the total cross section of the duct in view of the tendency of particles to stratify due to distortions of gas flow. This problem is related to (a) the selection of a most favorable sampling location, (b) the number and pattern of sampling points in the cross section, (c) the frequency of readings, and (d) the number and duration of runs. See Appendix H.

The function of the sampling device is essentially that of withdrawing a portion of the particulate matter laden gas at such a rate and in such a manner that it represents a true sample of filterable material at the point of extraction. There can be a variety of designs that satisfy these requirements by means of isokinetic sampling.

It is strongly recommended that prior to the test run all pertinent information required for translating velocity head readings into isokinetic sampling rates be put in readily calculable form, preferably as easily read charts, so that flue velocities read as a pretest procedure or read concurrently with the testing, can be immediately translated during the actual sampling run into isokinetic rates. Suggested procedures for doing this are given in Appendix J.

### 3.51 Sampling Location

*Selection of Sampling Cross Section*

Care must be taken to select the best possible sampling cross section of the duct. A straight run of duct preceding the point of measurement is, of course, preferable. In any event, avoid locations near sudden changes in area of direction. Such changes may cause fluctuating particulate matter stratification, or extreme turbulence leading to skewed or reversed gas flow. The use of vertical ducts, where possible is preferable as this eliminates the problems of settled particulate matter in the duct. In either horizontal or vertical ducts, the preferred location is at least 8 diameters downstream and 2 diameters upstream from any flow disturbulence. Such a sampling point location is often not available. Hence, in either horizontal or vertical ducts, the location of the test ports related to the number of duct diameters from any flow disturbance will determine the number of sampling positions necessary to obtain valid test results. See Fig. 1 of Appendix H.

The term "equivalent diameter" relates to the cross-sectional area of a rectangular duct which produces the same Reynolds number to the diameter of an equivalent cross-sectional area circular duct and is expressed and calculated as follows:

$$D = 4 \times \frac{\text{Area}}{\text{Perimeter}} = 2 \times \frac{(H \times W)}{(H + W)} \text{ where}$$

$D$ = equivalent diameter
$H$ = height of flue or duct
$W$ = width of flue or duct

*Access and Service Facilities*

Room for test setup and for free movement of the test apparatus during the test should be considered when selecting the sampling location. Staging for personnel and apparatus at the test location and access thereto shall conform to recognized safety codes. Adequacy of lighting, electric power outlets, communication facilities, etc., should also be considered.

*Settled Particulate Matter*

Particulate matter buildup on the bottoms of horizontal ducts is often encountered and must be considered when establishing duct dimensions for velocity traverses and when sectionalizing the duct into sampling areas. A bottom profile formed under equilibrium flow conditions can be established with sufficient accuracy by probing. This probing should be done at sufficient frequency to identify any changes in the profile during the test. The profile of dust buildup must be shown on a cross-sectional view of the duct if credit is to be obtained for the reduced cross-sectional area.

Bottom particulate matter buildup not only affects gas flow rate determination but often upsets particulate matter concentration determinations because of particulate flow along the bottom of the duct. It is therefore extremely important that the sampling probe be kept well above the buildup. The distance from the top surface of the buildup to the sampler nozzle should be one-half the distance between test zones. For example, if there is a 3 ft distance between test positions in the vertical direction, then the nozzle should be approximately 1½ ft above the surface of the buildup.

*Low Velocity Streams*

One may encounter duct arrangements where it is impossible to make satisfactory measurements of velocity at the location required for particulate matter sampling because they are too low to be read by any of the recommended instruments. In these circumstances some unconventional procedures may be necessary (see Appendix E).



Copyright ASME International
Provided by IHS under license with ASME
No reproduction or networking permitted without license from IHS
Not for Resale

### 3.52 Flow Measurement

The determination of a gas mass or volume for the purpose of establishing the rate of flow through a collection device, as it affects collection performance, should utilize the most accurate method available. A full understanding of the accuracy of velocity head measurements which can be made to determine total gas flow should determine whether these flow rates for each test situation should be established by calculation from fuel analysis and flue gas composition or from measurements of velocity head. In many cases, due to less-than-ideal conditions for velocity head measurement, flow determinations from combustion calculations have been found to be more accurate and this method is preferred where applicable. In such cases the flow rates as determined by velocity head measurements are usually higher than those determined by combustion calculations.

Calculation procedure for gas mass per unit weight of fuel is given in PTC 4.1 — "Steam Generating Units," paragraph 7.3.2.02. Gas flow rate will require a knowledge of fuel rate from a fuel metering device, or, in the case of a steam generator, the fuel rate can be established from a measured steam or water flow and a known or calculated steam generator efficiency under test conditions. The accuracy of gas flow rate established by this method will be the accuracy of measurement of gas weight per unit weight of fuel (PTC 4.1, "Probable Measurement Errors," paragraph 3.03.5) and the accuracy of metering devices.

### 3.53 Number and Distribution of Sample Points

Whether the flue or stack is circular or rectangular in cross section, sampling connections and traverse points should be selected to permit sampling in zones of equal area as illustrated in Appendix H. Since the arrangement of flues and stacks do not always lend themselves to permit locating connections in a preferred relationship to turns and cross-sectional changes, the frequency of traverse points and size of sampling areas will change depending upon this relationship.

Appendix H provides guidance for determining the number and location of sampling areas required for various sampling situations. All data relative to the selection of sampling points and dimensioned drawings of both the sampling cross-sectional profile and the duct arrangement (showing sources of flow disturbance) shall be included in the test report.

Adherence to these guidelines is recommended for accurate, consistent sampling of particulate matter. Since a greater number of points will not impair the sampling accuracy, a greater number of points may be used if desired.

If many sampling points are involved, it may prove advantageous to operate more than one sampler at a time. This can also prove helpful if information is desired, for example, on several ducts serving a common gas cleaning device as a measure of flow distribution between ducts.

### 3.54 Constancy of Test Conditions

Steady state operating conditions should be established before the start of each run, especially those conditions which affect gas temperature and flow rate. The Pitot tube traverse or actual sampling should not be started until conditions have become steady and remain steady for at least ½ hr. Longer waiting periods may be required to ensure equilibrium conditions when major changes in operation are made. Although constant operating conditions are necessary to obtain the most reliable results, it is recognized that constant operating conditions sometimes cannot be maintained. Variations in flow rate are best understood by those familiar with the process, and the degree of variations acceptable should be established by mutual consent. Flow variations are shown by variations in fan power requirements, fan control settings, gas analyses, fuel input rate, or combinations of these parameters. They can also be determined by continuously monitoring the gas velocity at a single sample point or at individual sampling points during a run.

If possible, during the testing period, all process equipment settings, fan settings, etc., should remain unchanged to assure the consistency of test results. Process recording charts should be included in the test report, if possible, with times of traverse and sampling clearly shown. Checks should be made after the tests on the profiles of settled particulate matter and on equipment settings to determine that they remained essentially unchanged to assure that a valid test has been obtained. When soot blowing or other periodic process action is a part of normal operations, the procedure for including such action, if desired, into the test program should be considered and full agreement obtained from all parties as to how this will be done.

### 3.55 Duration of Runs

In general, sampling times at each point should be equal increments of the total time. The total sampling time will be that necessary to insure collection of a weighable sample. Calculations should be made for each installation to determine the sampling time necessary to obtain a sample weighable within the accuracy desired. It has been demonstrated that an accurate, weighable catch can usual-



Copyright ASME International
Provided by IHS under license with ASME
No reproduction or networking permitted without license from IHS
Not for Resale

ly be obtained during a 1 to 4 hr run at the discharge of high efficiency collection systems.

On certain cyclic operations it is impossible to maintain desired test conditions for an extended duration of run, and in such cases the maximum sampling time will be limited by the cycle time. A complete traverse of points should be made so that the total of the equal time increments for all traverse points should equal the cycle time. Depending upon the length of the cycle, more than three runs may be required to obtain consistent results. Some cases may require the simultaneous use of two or more sampling systems.

### 3.56 Frequency of Readings

Where the Pitot tube, or velocity head measuring device is an integral part of the sampler, velocity head readings shall be monitored continuously and the sample flow rate, as determined by flowrater, rotameter, or orifice meter, shall be maintained at the proper isokinetic sampling rate to match the velocity head reading.

It is advisable to take Pitot tube traverses prior to sampling to determine the flow pattern and make the proper selection of sample nozzle sizes to obtain isokinetic sample flow rates. When test runs are long in duration, it is desirable to conduct at least a partial traverse again after the sampling period to verify that flow rates and flow patterns have not changed. If, during the sampling period, there is any indication by any process or test instrumentation that operating conditions may be changing, a traverse should be made to determine if changes have occurred.

If the sampling flow is determined by a volume meter, the flow rate can be established immediately after the start of sampling by dividing the meter reading by the corresponding increment of the total sampling time. However, even if an integrating meter is used, it is easier to establish the flow rate by using a flowrater or rotameter in series with the meter.

A record should be kept of flow rates, integrated flow measurements, gas pressures and temperatures at the sampling flow measuring device, at 5 min intervals, or at intervals consistent with the sampling time at each point, together with an indentification of the sampling point location (e.g., at start and finish of each sampling interval when these intervals are longer than 5 min but shorter than 10 min).

Where the sampler is equipped with an integral velocity head measuring device, it is essential to record the velocity head and temperature readings in the duct. This information is necessary to calculate the gas flow by velocity head measurements and can be useful if a check is desired on a calculated combustion gas flow rate.

If sample gas volumes are obtained by the use of a volume meter, the integrator should be read at the exact time of the start and finish of sampling at each sampling point. It is advisable to obtain readings at regular intervals during the run as a check against the total, and as insurance against unforseen interruption or termination of the test run.

### 3.57 Procedure for Operating Samplers

There are certain general considerations inherent in the use of any sampling device that should be observed to permit obtaining accurate, repeatable results. Specific procedures for different types of sampling devices should be recognized, understood, and followed.

Prior to the start of any run, the preweighed filter and entire sampling system should be inspected and tested to be sure all connections in the sampling system and in the manometer or gage connections are free of leakage. This is particularly important where connections are interposed between the filter medium and the sample gas metering device since, obviously, any leaks ahead of the metering device will cause erroneously high sample gas flow measurements and give a false isokinetic indication (see paragraph 4.51). All apparatus used should be electrically grounded to the ductwork or other good ground.

The sampler probe should be clearly marked to indicate the direction of the sampler nozzle and to permit the operator to recognize when the probe is at the predetermined sampling points.

The equipment being tested should have been at test conditions for an agreed-upon time before starting a run. All parties involved should be aware that a test is proceeding and not alter operating conditions that will affect the conduct of the test. Should any unavoidable changes occur, the testing parties should be advised promptly so the run can be interrupted until test conditions are restored. Some changes may require starting a new test with new filters and clean equipment.

The plugs or caps closing the test ports should be removed and the connections thoroughly cleaned of any loose or adhering deposit that may have accumulated. Be sure that any protective covering over the sampler nozzle is removed. The sampling system should be sealed to prevent any reverse flow during insertion of the probe. This is done by closing the valve or clamping shut the hose to the exhausting system. Where high pressure or drafts exists in a flue or duct at the sampling location, high flow veloc-



Copyright ASME International
Provided by IHS under license with ASME
No reproduction or networking permitted without license from IHS
Not for Resale

ities will occur through the open sampling connection, having an aspirating affect which can remove collected particulate matter from the sampling system as the sampling nozzle passes through. Extreme care will be required during this period.

Where the design of the sampling apparatus permits, insert the sampler through the first sampling port with the nozzle facing downstream and allow the sampler to come to operating temperature. After the warm-up time, timing should be started simultaneously with facing the nozzle upstream and establishing isokinetic flow rate.

This sequence of actions should be performed as rapidly as possible. As soon as sampling conditions are stable, temperatures, pressures, and velocity head readings should be recorded and recording continued at 5 min intervals or at intervals consistent with the sampling time at each point. It is recommended that the first sample point be the point of greatest insertion to permit quick warming of the total sample probe and to facilitate probe removal after the completion of sampling through each sample port.

At the appropriate time interval, the sampler should be moved to the next sample point established for this connection and the sampling rate adjusted for isokinetic rate. Readings of temperature, pressure, and velocity heads should continue at equal time intervals. The time interval at each sampling point should be recorded, with the appropriate readings, on the sampling data sheet.

When the last sampling point at a particular test port is completed, timing should be stopped, the sampling flow rate control valve closed, and simultaneously the sample nozzle turned 180 degrees where possible, and the probe removed. The exhausting system may be shut off during the sampler removal from the test port to seal the system and prevent loss of collected sample, However, this is not recommended when the static pressure in the duct is negative.

The procedure should be continued until all sample points have been traversed. This will constitute a test run.

After removal of the sampler from the final point, and after obtaining a final reading of sample gas volume, manipulate the apparatus to recover quantitatively any loose sample in the nozzle ahead of the filter medium.

Extreme care should be exercised to avoid contamination by extraneous material.

After the sampler has cooled sufficiently to handle, it is recommended that the entire sampler head or filter holder and probes exposed to the sample flow, properly encased or plugged, be transported to the laboratory or other clean working area for sample recovery (see paragraph 4.5).

Sufficient replicate runs should be made to comply with the pretest agreement on the number of, and agreement between, runs. An alternate procedure, having special advantages when reviewing test results, involves the simultaneous operation of duplicate samplers so that each sampler, starting at an opposite end of the transverse path, covers the total number of sampling points in a run overlapping the opposite or duplicate sampler.



Copyright ASME International
Provided by IHS under license with ASME
No reproduction or networking permitted without license from IHS
Not for Resale

# SECTION 4 – INSTRUMENTS AND METHODS OF MEASUREMENT

## 4.1 INSTRUMENTS AND THEIR USE

### 4.11 Necessary Instruments

The required instruments are described in this Section. Before proceeding to select or construct instruments, those chapters of I & A dealing with these instruments should be consulted for detailed information. Many of the required conversion factors and corrections which have become standardized will be found in these chapters of I & A (Reference [6], Section 7).

The instruments and test apparatus requirements are as follows:

(A) Standard Pitot tubes or other calibrated devices for making gas velocity measurements in the gas stream.

(B) Sampling apparatus consisting of nozzles, sampling probes and particulate matter collectors for proper sampling of the gas stream and collecting the particulate matter entrained therein.

(C) Metering devices, usually orifices and/or gas meters, for determining the gas sampling rate and volume.

(D) Exhausting devices for withdrawing the required gas samples.

(E) Thermometers or thermocouples with temperature indicator for measuring the gas temperatures at the sampling locations in the gas stream and at the orifices or gas meters.

(F) Inclined manometers or gages of equal accuracy for use with Pitot tubes in reading the velocity pressures.

(G) Inclined or vertical manometers or gages of equal accuracy for indicating the pressure drop across the metering orifices.

(H) Manometers or suitable gages for measuring the static pressure at discharge of the metering orifice.

(I) Manometers or suitable gages for measuring the static pressure at the sampling location.

(J) A balance of suitable precision for weighing the collected particulate matter samples.

(K) A drying oven suitable for removing moisture from the samples and filters before weighing and a desiccator, with fresh desiccant, to hold the samples and filters while cooling after drying and before weighing. Drying temperature shall be 105°C minimum, higher if necessary, to meet the requirements of specific sampling conditions.

(L) Orsat apparatus, or other instrumentation of equal accuracy, for use in determining the analysis of the sample gas. Such an analysis is required to permit correction to design excess air or percent $O_2$ basis and is necessary if gas flow rates are to be determined by combustion calculations or other stoichiometric means. The Orsat apparatus and its operation are described in I & A, PTC 19.10, Part 10, "Flue and Exhaust Gas Analysis."

(M) Stopwatch with sweep second hand (or equivalent timing devices).

(N) Barometer.

(O) Humidity measurement apparatus. The measurement of humidity and the apparatus required is covered in I & A, PTC 19.18, Part 18, "Humidity Determinations."

Illustrations of typical instruments and test apparatus are contained in the Appendix.

### 4.12 Isokinetic Sampling

The sampling train can use either of two methods for the maintenance of an isokinetic sampling rate.

(a) With the Pitot tube attached to the sampling probe so that the sampling rate is continuously adjusted to match the variations of gas velocity at the point of sampling. This is the preferred procedure.

(b) With the Pitot tube traverse conducted immediately prior to the actual sampling period for particulate matter so that the sampling rates for isokinetic flow are pre-calculated. This procedure may be used if the velocity fluctuations are small. See paragraphs 3.54 and 4.33b.

The Appendix contains additional information on isokinetic sampling and aids for establishing and maintaining isokinetic flow rates.

## 4.2 DESCRIPTION OF SAMPLING TRAIN

### 4.21 Filtration Section

The filtration section may be made up of the following components:

(A) A nozzle of acceptable design. See examples in Appendix B.



Copyright ASME International
Provided by IHS under license with ASME
No reproduction or networking permitted without license from IHS
Not for Resale

(B) A filter assembly, close-coupled to and immediately following the nozzle, designed for operation within the duct or stack gas stream.

(C) Where a back-up filter is used, it is preferably close-coupled to the nozzle and the primary filter so as to be completely immersed in the stack gas.

(D) Connecting tube (probe) between the filter(s) and flexible hose leading to the sample flow measurement and moisture measurement sections.

(E) As an alternative to the in-stack type filter, the primary filter (with back-up filter, if required) may be placed outside the duct or stack where temperature conditions or sampling site configuration prevents the use of an in-stack filter and appropriate precautions are taken. See paragraph 4.3. Where temperature conditions require external sample filtration, the sampling probe and tubing and the filtering system should be maintained at a temperature well above the acid dewpoint or at sufficiently high temperature to prevent condensation in the sample flow path to the filter and on the filter.

### 4.22 Flow Measurement and Control Section

The flow measurement and control section includes means for continuously monitoring isokinetic sampling rate and for measurement of the total quantity of gas sampled. It can be comprised of various combinations of the following components as diagramed in Appendix C and discussed in paragraph 4.3.

(A) Condenser, or impingers in an ice bath, following the filtration section for the condensation of water vapor.

(B) Desiccator, containing desiccant such as silica gel or Drierrite immediately following the condenser section.

(C) Integrating gas meter immediately following the desiccator.

(D) Integrating gas meter following the airtight pump.

(E) Orifice flowmeter, in place of integrating gas meter, ahead of vacuum source.

(F) Orifice flowmeter located after an airtight pump and used in conjunction with (C) or (D) above.

(G) Vacuum source, to induce sample flow, which may be either a pump or aspirator.

(H) Temperature and pressure gages on the metering devices and on the condenser.

Recommended arrangements of these components in the sampling systems are illustrated in Appendix C.

## 4.3 DISCUSSION OF SAMPLING TRAINS AND THEIR COMPONENTS

### 4.31 Sampling Nozzle

The nozzle size is based on measurements or estimates of gas velocities, the expected particulate matter concentration, and the desired weight of sample. The quantity of gas required to produce this weight is calculated from the expected particulate matter concentration and the desired sample weight. The size of the nozzle is calculated to give the same velocity to gases entering the nozzle as exists in gases passing the nozzle (isokinetic flow). The nozzle diameter should be as large as possible and should be of sufficient size to secure, within a reasonable time, samples large enough for accurate computation of particulate matter concentration. Nozzles smaller than 0.2 in. diameter are not recommended except for special conditions such as high gas velocities. Typical nozzle designs are shown in Appendix B.

### 4.32a Filter Location and Design

In a low volume sampling train, the in-stack filter has advantages over all configurations and is largely free of disadvantages. Therefore, it is the preferred method of filtration. (See Appendix A.)

If, due to excessive gas temperatures or for other reasons, it is necessary to locate the filter outside the gas stream, special precautions are necessary to prevent errors due to condensation of sulfuric acid (acid dewpoint) or of water (aqueous dewpoint) in the sampling probe and/or in the filter assembly. This can cause corrosion problems and/or result in the formation of "psuedo-particulate matter" which is not present in the gas stream at the sampling location.

The quantitative recovery of the particulate matter which is deposited in the sampling probe and in the tubing (if used) between the probe and filter presents major problems. Great care is required to insure complete removal without loss or contamination. The particulate matter removed from the probe and tubing between the nozzle and the filter must be added to the particulate matter removed by the filter(s) in the determination of the total quantity of particulate matter in the gas sample. In these manipulations, the potential for error greatly increases with increased length of probe and tubing.

The following is a listing of precautions which must be taken when exterior filters are used.

(a) The sample probe and sample tubing from the nozzle to the particulate matter collector should be smooth with no interruptions. The probe should be fabricated from a material which is the most completely resistant to corrosion or reaction in the environment being tested to avoid contamination of particulate matter which settles out in the probe. Similar precautions should be taken in the selection of sample tubing.

(b) It is imperative that the temperature of the gas sample be maintained at or above the dewpoints (aqueous



Copyright ASME International
Provided by IHS under license with ASME
No reproduction or networking permitted without license from IHS
Not for Resale

and acid) or at the gas temperature at the sampling point location until it passes through the particulate matter collector(s). This requires that the portion of probe and tubing external to the stack or duct be heat insulated and provided with means for controlled heating. See Appendices A, B, and C.

(c) A temperature measuring device is required, so installed that it provides a true measurement of gas temperature through the filter. The temperature must be continuously monitored and recorded to insure satisfactory performance of the heating system in maintaining the required gas temperatures.

(d) Extra care is required for the quantitative recovery of particulate matter which is deposited in the probe and tubing. Flushing the interior with acetone, water, or other liquid is an uncertain technique for quantitative recovery. The procedures most appropriate to the sample and the sampling apparatus used must be carefully conducted to remove the deposited sample as completely as possible without contaminating it with extraneous material on the sampling train or in the atmosphere. Experience has indicated that particulate matter recovery problems can result in an "uncertainty factor" of considerable magnitude, especially with long probes.

The high volume sampling train also employs an exterior filter, but is less vulnerable to the condensation problems cited above. See Appendices A, B, and C.

### 4.32b Particulate Matter Filter Design

The filtering material is usually made in thimble, flat-disk, sheet, or bag form so the particulate matter can be retained in or on the filter for drying and weighing. Fiber or sintered ceramic or metallic thimbles are manufactured in relatively small sizes with a filtering capacity of 0.5 to 1.5 cu ft per minute. Flat disks, sheets and bags can be made of any size, their only limitations besides strength being that they shall be of fine enough porosity to give the required filtering efficiency, large enough to keep the resistance to gas flow within the limits of the exhausting device, and small enough to permit accurately determining their increase in mass as a result of the particulate matter caught. Since it is difficult to control the moisture content of fabric filters, it is important to make the ratio of the mass of the filter to the mass of the particulates caught as small as possible.

Keeping this mass ratio small is very difficult if the particulate sample is taken downstream of an extremely high efficiency collector. Accordingly, in such a case it is particularly important to select a filter having the least initial mass which is practicable.

Furthermore, the filter material must be completely unreactive in respect to both the particulate matter and the gas to avoid contamination of the sample. Chemical reactions of acid gases with the particles or with the alkaline filter fibers can "create" particles. With filters having mean fiber diameters less than 1$\mu$m, the absorption of water vapor can be rapid and appreciable during handling. Filter media which may possess catalytic properties in respect to the oxidation of $SO_2$ should be avoided. (See Section 7, References [23] and [24].)

The filtration efficiency of the filter shall be adequate to ensure that at least 99 percent by mass of all particulate matter in the filtered sample is retained on the filter. Selection and designation of the filter media should be based either on the certified filtration efficiency of the filter or upon the actual demonstrated performance of the filter under equal or more severe filtration efficiency tests. The final selection of acceptable filter media shall be a matter of mutual agreement by all parties concerned.

The filtration efficiency of a particulate filter media is a function of both the nature and concentration of the particulate matter concerned and of the duration and rate of sampling. Hence, arbitrary assignment of "filtration efficiency" ratings to a particular filter media, based upon some specified rating procedure, can be very misleading. In actual sampling practice, the true filtration efficiency achieved is usually far greater than would be indicated by the nominal "filtration efficiency" rating assigned to the filter media. This subject is thoroughly discussed in Appendix D.

## 4.33 Gas Flow Metering

### 4.33a Gas Flow Metering Devices

Gas flow metering devices can be located at any convenient place in the sample system downstream of the filter device(s) provided:

(a) Gas tight connections are maintained between the nozzle and the metering device.

(b) The device is installed to minimize turbulence (see I & A, Part 5, Chapter 4).

(c) The exhauster is airtight when the measuring device is located downstream of the exhauster.

(d) Any condensation prior to the device is measured and compensated for.

(e) Gases are dry entering the metering device or a moisture correction is determined.

---

The dimensional unit "micron," abbreviated "$\mu$," refers to a dimension of $1.0 \times 10^{-6}$ meters.



Copyright ASME International
Provided by IHS under license with ASME
No reproduction or networking permitted without license from IHS
Not for Resale

### 4.33b Regulation of Sampling Rate

The rate of sampling is usually adjusted, by a valve in the sampling system suction line, to maintain isokinetic sampling conditions. A Pitot tube near the sample point indicates gas velocity in the duct and a flow measuring device in the sampling system provides data to indicate the velocity in the nozzle.

Non-isokinetic sampling that deviates from true isokinetic conditions by more than ± 10 percent is permissible only upon the mutual agreement of all parties. With all particles present in the gas stream less than 3μm in diameter, deviations from isokinetic up to ± 30 percent may be acceptable by mutual consent. It is recognized that when the diameter of the largest particles present do not exceed 1μm, errors in sample weight and composition resulting form non-isokinetic sampling rates are usually negligible. Hence, when this condition exists, non-isokinetic sampling may be considered for special circumstances by the mutual agreement of all parties concerned.

In situations where the velocity fluctuations are relatively small, a velocity traverse may be made immediately prior to the sample traverse. This method is acceptable for use in establishing isokinetic gas sampling rates if the gas flow of the process is constant within a deviation of ± 10 percent for the time duration of the Pitot tube traverse when compared to the particulate sampling period. Constancy can often be concluded by reference to the operating characteristics of the process and its exhaust fan. This can be further substantiated by process recording charts and by monitoring of fan and process draft readings.

If these records are not readily available, a monitor Pitot tube may be inserted at the representative position at the test location and velocity heads recorded at periodic intervals during the sampling period. These periodic gas velocity measurements can be compared to single point readings obtained during the traverse period, and isokinetic rates adjusted based on the single point values.

Most gas meters have dials indicating ½ to 1 cu ft. These are not considered practical for use in maintaining isokinetic flow rates in ducts with varying velocity pressures. However, gas meters are available which have dials which read to 0.02 cu ft and these can be used with a stopwatch to maintain isokinetic flow rate.

Instantaneous flow rate indicators, such as differential manometers across an orifice, are preferred and should be used with a graph or chart which relates gas velocity and density to required sampling rate in order to reduce the time required to verify isokinetic conditions. Sample flow rate should be adjusted to maintain isokinetic conditions throughout the run.

An indicating flow rate meter may be used with an integrating meter, and the flow integrated by time. Accurate time and flow rates must be used to ensure integration of the various flow rates over the test run.

### 4.33c Use of Metering Devices

All indicating flow meters installed in the sampling lines, for use as a guide in regulating the sampling rate or for measuring the quantity of gas sampled, shall be calibrated with a test device traceable to a National Bureau of Standards flow measuring instrument. It is not sufficiently accurate to use average handbook values for the coefficient of discharge when the orifices are small. Thin-plate orifices are usual, although thick orifices with well-rounded inlets may be employed if desired. The size of the orifice depends on the rate of sampling. In general, the orifice should be small enough to give a deflection which can be read accurately on the type of manometer used and yet not so small that the added pressure drop will adversely affect the operation of the exhausting device. If desired, the orifices can be sized to be used with the same inclined manometers as the Pitot tubes. For instructions regarding the design, installation, and use of these orifices, refer to I & A Part 5, Chapter 4, "Flow Measurements by Means of Standardized Nozzles and Orifice Plates," or refer to PTC 19.5 – 1972, "Interim Supplement on Instruments and Apparatus." The metering device can be located at any convenient place provided the precautions mentioned herein are taken. When gas meters are used they shall be calibrated at the beginning and end of the test series and whenever there is an indication that calibration may have changed. Upon completion of each test, after removal of filter, it is recommended that the sampling train be purged with clean air to recover all moisture in the train and ensure that corrosive flue gas does not remain in the train and gas meter. Flow indicators should be periodically checked for cleanliness and recalibrated at appropriate intervals.

### 4.34 Flow-Inducing Devices

The type of exhauster or vacuum producer is immaterial so long as it has adequate capacity. Blowers which provide a steady suction pressure and flow as well as air, water, and steam ejectors have been used. The selection of the exhauster for any particular test should be governed by the most convenient energy source available.

When the exhauster is located upstream of the measuring device, the exhauster must be an airtight device to eliminate leakage of air or other fluids into the sample gas flow. Specially constructed leakproof equipment is available for this service and is preferred. Reported errors are



Copyright ASME International
Provided by IHS under license with ASME
No reproduction or networking permitted without license from IHS
Not for Resale

usually less with gas meters following these pumps than with gas meters operating under high and varying suction conditions.

### 4.35 Manometers

The manometers used with the Pitot tubes shall be of the inclined type graduated to 0.01 in. Magnehelic gages of comparable accuracy may also be used provided that initial calibration checks are performed. The same type can be used for the orifice differential pressure reading if the orifices are proportioned to suit. Inclined gages, whether filled with water or some other liquid, shall not require special calibration if a gage of standard manufacture is used. For description and use of manometers and Pitot tubes, refer to Test Codes for "Compressors and Exhausters" (PTC 10); "Fans" (PTC 11), (to be published); and I & A, PTC 19.2 "Pressure Measurement." When using manometers containing a liquid other than water, care shall be exercised that the density of the liquid during the test is the same as during calibration. Correction for the density of such liquids for temperature is often appreciable if the atmospheric temperature differs greatly from 68°F. When necessary, the temperature correction for density shall be applied.

If the metering orifices are designed to give a large deflection, water-filled vertical manometers may be used to measure their differential pressure. Similar manometers can be used to measure the pressure drop across the dust separator and the static pressure in the flue. The static pressure at the discharge of the metering orifices shall be measured with manometers. The divisions of any vertical manometer scale shall be checked against a machinist's scale. Sometimes scales graduated to read pressure in inches of water are used with other liquids. If a barometer is available, it should be read; otherwise a value of 29.92 in. Hg at sea level, corrected to the elevation of the test point, shall be used.

### 4.36 Condenser

If the dew point of the gases is above the metering temperature, a condenser should be employed, to prevent condensation in metering devices. The condenser must have sufficient storage capacity to hold the total liquid accumulation for a complete test run. The temperature of gases leaving the condenser must be measured, since this is the saturation temperature of the gases, which, together with the quantity of liquid water collected, may be used to calculate the total moisture in the flue gases.

In systems where moisture in the flue gas is derived only from fuel and air moisture, an analysis of a properly obtained sample of raw fuel will allow determinations of moisture in the flue gas. On systems such as wet scrubbers, other means must be used for flue gas moisture determination – such as a condenser system or an aspirated psychrometer.

### 4.37 Thermometers and Thermocouples

Thermometers, thermocouples, or thermistors are permitted under this Code if used in accordance with I & A, 19.3. If thermocouples are used in conjunction with a pyrometer or potentiometer, a comparison check with a mercury thermometer or calibration with a standard thermocouple is advisable.

When thermal stratification of gases is evident, it is recommended that the temperature of the flue gas shall be recorded at each sampling location. The temperature measuring device employed shall be attached to the Pitot tube in such a manner as not to interfere with the end openings of the Pitot tube. Flue gas temperature as recorded or monitored by process instrumentation shall not be used in sampling calculations, but shall provide a check to the measurements at the test location.

## 4.4 MEASUREMENT OF GAS VELOCITY

### 4.41 Pitot Tubes

The Pitot tubes used for measuring the gas velocities in the duct shall be of standard manufacture and certified by the manufacturer as to accuracy. Acceptable designs are contained in "Flow Meters" (6th Edition) and in PTC 19.5 – 1972. Other designs are acceptable provided the total and the static pressure serving apertures are properly designed to yield a calibration factor of unity. A type of velocity measuring device not meeting this criterion must be calibrated under conditions simulating those of the test over the full range of velocities for which it will be applied. Where gas velocity measuring devices are integral to the sampling probe, such devices must be calibrated.

### 4.42 Velocity Measurements

Velocity measurements are required to determine the sampling velocity at each point where the sampling nozzles are to be positioned and separately for determining the total quantity of gas passing the test section. See paragraph 3.51 for the method to be employed in determining the points where these measurements should be made.

The initial set of velocity pressure readings may be taken after the gas flow and temperature conditions have become steady, but before the start of the test run. These velocity pressure readings, together with gas temperature



Copyright ASME International
Provided by IHS under license with ASME
No reproduction or networking permitted without license from IHS

Not for Resale

readings taken at the same points, may be used in determining the proper sampling rate for each traverse point.

It is often advisable to locate a Pitot tube adjacent to the sampling nozzle, for obtaining velocity pressure readings during the sampling traverse and to establish sampling rates on the basis of these readings. However, they should be so spaced that induced turbulence does not cause errors (based on prior studies to determine possible turbulence-induced interaction between sample nozzle and Pitot tube).

Where velocity measuring devices are integral to the sampling probe, separate Pitot tubes can be used in a traverse to explore the cross-sectional area velocity pattern and obtain a preliminary gas flow rate for check purposes. It may require more gas velocity measurements to obtain a true gas flow than by the positions specified for representatives sampling of particulate matter.

If the gas flow rate at the various sampling points in the duct remain reasonably constant, as determined by the monitor readings, the initial set of velocity and temperature readings by a separate traverse will suffice. If the monitor Pitot tube readings change during the sampling period, correction to the isokinetic sampling rates must be made, based upon the magnitude of the change. If any question exists during steady state processes that the gas flow rate changed appreciably during the sampling period, then a complete Pitot tube traverse should be repeated at the conclusion of the test run. If the deviation between the prior and concluding velocity traverses is greater than 10 percent, then the test run should be voided and another run conducted. In all cases, a partial traverse should be made at the end of the run to verify that flow conditions have not changed appreciably. A spare Pitot tube should be available in case of damage or trouble with those in use. See paragraph 3.11(d).

### 4.43 Time Measurement

Any accurate clock or watch, with a sweep second hand, is adequate for the time measurement requirements of these tests. However, a stopwatch will provide greater accuracy and convenience. Not only shall a record be kept of the duration of each run, but the movement of the sampling trains from point to point shall be kept on schedule, and any outage time for the sampling trains shall be accurately recorded. If gas flow rates are determined from an integrating gas meter, a stopwatch is a necessity.

Time recording should be coordinated between different sampling locations and test personnel. This is especially important when relating test measurements to process variables.

## 4.5 FILTER HANDLING AND TREATMENT OF COLLECTED PARTICULATE MATTER SAMPLES

### 4.51 Filter Handling

The filter media used during a test run must be oven dried to a constant mass in a heating oven and desiccated both before and after the run. The mass of sample collected on the filter will usually be quite small in relation to the mass of the filter. Therefore, it is mandatory that all precautions be taken to assure that there is no contamination of the filter media and/or sample or loss of sample during handling.

Filter specification data will generally define the best filter media for various test conditions. While the single mat-type filter offers the benefit of low tare mass and high filtration efficiency, there can be handling problems in high moisture content gas streams. The alundum thimble is an effective inert filter but it has a high tare mass and a potential for gas leakage around the edge (if improperly installed). However, if installed and used properly, it will provide high collection efficiencies that are comparable to glass fiber mat without the need for back-up filters. The following suggestions will ensure successful use of the thimble for many difficult sampling situations.

(1) Use of a medium porosity thimble.

(2) Inspect thimbles for edge defects and squareness.

(3) All new thimbles that pass inspection should be vigorously brushed, inside and out, with a hard bristle brush.

(4) The edge of a new thimble should be lightly turned on a fine sandpaper to insure good sealing, then cleaned of sanding residue.

(5) New thimbles should be fired in a muffle furnace for initial stabilization processing prior to normal weighing procedures to determine constant tare mass.

(6) New thimbles should be initially used only for high concentration particulate matter sampling. They may be used for low concentration critical sampling after a minimum of two uses on noncritical or high concentration samples.

(7) Thimbles thus processed should be used many times before discarding or as long as they remain in good physical condition. Cleaning procedures should leave the thimble in a "semi-blinded" condition which will provide a minimum pressure drop of 2 in. Hg across a well prepared thimble at normal sample gas flow rate.

(8) Two soft asbestos gaskets should be used to seal the edge of the thimble in the holder.

While filter leakage has been found to be negligible when the above procedures and precautions are applied,



Copyright ASME International
Provided by IHS under license with ASME
No reproduction or networking permitted without license from IHS

Not for Resale

normal leak tests (with compensation for thermal expansion of the filter holders) must be performed when conducting sampling tests. Test the sampling system for leakage under test conditions – verifying that no decrease in vacuum occurs after a period of at least 1 min.

### 4.52 Weighing of Filters

Weighing with a balanced-beam chemical balance is recommended for the processing of filter media before and after sampling. The balance shall be capable of weighing to the nearest 0.1 mg. It is recommended that one person be assigned to process and weigh all samples during any given test program. The balance used shall be checked periodically for the zero setting.

### 4.53 Drying of Filters

The filter media should be dried to constant mass in a heating oven at a temperature which will not exceed the temperature of the test location. Heating for one hour at 105°C (220°F) is usually sufficient. Place the filter in a desiccator, containing fresh desiccant, for at least 20 min or until the filter media reaches ambient room temperature before weighing. Keep the time period for weighing the filter as short as possible. It is especially important that approximately the same weighing time is used before and after each test and that the realtive humidity of the weighing area be similar.

### 4.54 Removal and Processing of Deposits in Sample Probe

In most cases, the use of acetone rinsing (Reagent Grade) is the most effective way to remove particulate matter deposited in the sample probe even though this is an uncertain technique for quantitative sample recovery. The minimum amount of acetone required for complete rinsing of the probe and other sample-exposed surfaces should be used. The removal of loose deposited particulate matter and the rinsing operation should be so conducted that the possibilities for sample loss and/or contamination are minimized. Great care should be exercised to insure that the Reagent Grade acetone used does not become contaminated in any way.

Collect all loose particulate matter and acetone washings in a thoroughly cleaned sample container and seal for transporting to the laboratory.

In the laboratory, transfer the contents of the sample container quantitatively to a tared beaker and evaporate to dryness at ambient temperature and pressure. Desiccate and dry to constant weight. Weigh and report results to the nearest 0.5 mg.

### 4.55 Total Sample Mass

The total mass of sample collected during a run is the mass of the particulate matter collected on the filter or filters used plus the mass of the dry residue obtained from the evaporation of the acetone washings. A record shall be kept of the individual masses as well as the combined mass and this should be included in the test report.

## 4.6 SELECTION AND DESIGNATION OF INSTRUMENTATION AND METHODS OF MEASUREMENT TO BE USED IN TESTS

This Code contains the information required for the proper selection of the instrumentation, methods of measurement, and the test procedures to be used for obtaining valid test results under various test situations. Due to the wide range of test situations which may be encountered and the limits of applicability of certain items of apparatus and method of test, great care should be taken in the selection of the appropriate apparatus and methods of tests to be used in any given test program.

Therefore, in the use of this Code in conjunction with commercial agreements and air pollution control regulations, it is necessary that the appropriate test apparatus and methods of test to be used are properly designated, or, as an alternative, the mechanisms for their designation are provided in the pertinent Contracts and Regulations.

In any case, as a consequence of the provisions of the Contracts and/or Regulations involved, the test apparatus and methods of tests to be used in a given test situation, or, for a given category of test situations, should be clearly defined and agreed upon by all parties concerned.

The following is provided for guidance and assistance in complying with the aforestated requirements when this Code is used in conjunction with commercial contracts or air pollution control regulations.

### 4.61 Designation of Test Apparatus

While it is desirable to designate the appropriate type of test apparatus to be used, it is practical to provide a feasible amount of leeway in respect to the detailed design of all the components and their manner of incorporation in the sampling system.

Appendix C contains illustrations of basic sampling system configurations which are recommended by this Code for various normal applications. Options are provided, both in respect to the filtration section and the gas flow control section of the train, to meet various test requirements. Numerical designations have been given to



Copyright ASME International
Provided by IHS under license with ASME
No reproduction or networking permitted without license from IHS

Not for Resale

each option. These can be used for designating the type of sampling train to be used for particular test situations of concern. This can be supplemented by additional requirements and/or guidelines as appropriate to the nature of the test.

### 4.62 Designation of Methods of Test

After a study has been made of all the factors involved in conducting a test on specific installations or categories of process equipment, under the desired operating conditions, these factors should be utilized to define the nature of the test program which will provide the most valid and meaningful test results. The definition of the test program should include, but is not limited to the following items.

(a) Operating conditions of the installation during the tests.

(b) Number and duration of test runs.

(c) Number and location of sampling points.

(d) Methods for obtaining data on operating conditions during the test.

(e) Supplementary test data required and the means for obtaining such data.

(f) Procedures for handling test data and reporting test results.

(g) Manner of interpretation of test results for the purpose of the tests.



Copyright ASME International
Provided by IHS under license with ASME
No reproduction or networking permitted without license from IHS
Not for Resale

# SECTION 5 – COMPUTATIONS OF RESULTS

This Section covers the computation of results and the preliminary computations needed to operate the test apparatus.

## 5.1 DENSITY OF DRY FLUE GAS

The density will be required in converting velocity head of the gas to feet per minute (meters per minute) and CFM ($m^3$/min) to pounds per minute (kilogram per minute) or vice versa. The density of dry flue gas can be determined from the constituents in the flue gas. With an Orsat, the percentage by dry volume of carbon dioxide, $CO_2$, and oxygen, $O_2$, can be measured when a fossil fuel is burned (see PTC 19.10). The percentage of nitrogen, $N_2$, is determined by difference. If complete combustion can be assumed, the volume fraction of each gas is multiplied by its respective molecular weight (MW) to determine the MW fraction. The sum of the MW fractions is equal to the dry flue gas MW. When the gas being sampled is from a noncombustion source, a knowledge of the constituents present is necessary to determine what equipment is needed to measure the concentrations.

Example:

| Gas | % by Vol. | MW | MW Fraction | |
|---|---|---|---|---|
| $CO_2$ | 13.5 | 44.01 | 5.94 | |
| $O_2$ | 5.2 | 32.00 | 1.66 | |
| $N_2$ | 81.3 | 28.02 | 22.76 | |
| | | | 30.36 | Avg. MW of dry flue gas |

The density, $\rho_f$, is found by dividing the flue gas MW by the volume occupied by one mole of gas at the condition desired.

One pound-mole (kg-mole) will occupy 359.05 cu ft (22.415 cu m at 32°F (0°C) and 29.92 in. mercury (101.325 kPa).

$$\text{Density} = \frac{30.36}{359.05\ \text{ft}^3/\text{lb-mole}} = 0.0846\ \frac{\text{lb}}{\text{ft}^3}$$

@ 32°F and 29.92 in. Hg

$$\text{or} = \frac{30.36}{22.415\ \text{m}^3/\text{kg-mol}} = 1.345\ \frac{\text{kg}}{\text{m}^3}$$

@ 0°C and 101.325 kPa (760 mm Hg)

To adjust the density to any other temperature $T$, and pressure $P$, the density previously calculated is multiplied by the absolute temperature and pressure ratios.

Density at desired conditions = Density at standard conditions, multiplied by the temperature and pressure correction factors below.

$$\frac{(32°\text{F} + 459.67°\text{F})}{(T + 459.67°\text{F})} \text{ and } \frac{P\text{ in. Hg}}{29.92\text{ in. Hg}}$$

or

$$\frac{273.09°\text{C}}{(T + 273.15°\text{C})} \text{ and } \frac{P\text{ kPa}}{101.325\text{ kPa}}$$

## 5.2 MOISTURE IN FLUE GAS

The moisutre in flue gas can be calculated from the fuel analysis and the mositure in the air (refer to PTC 4.1, Section 7). There are two other prime methods for determining the moisture in the flue gas. The first is the wet-bulb and dry-bulb method (see Fig. 5-1). Information on this method is found in Instrument and Apparatus Supplement (I & A), PTC 19.18. When using the wet-bulb dry-bulb method, it is sufficiently accurate to use air-water vapor humidity charts. Humidity is a function of the molecular weight of the gas. Since the presence of $CO_2$ in the flue gas slightly increases the MW of the gas there is less water vapor than determined with an air-water vapor psychrometric chart. The water vapor pressure can be calculated using wet-bulb and dry-bulb temperatures and an equation developed by W. H. Carrier. This equa-



Copyright ASME International
Provided by IHS under license with ASME
No reproduction or networking permitted without license from IHS
Not for Resale

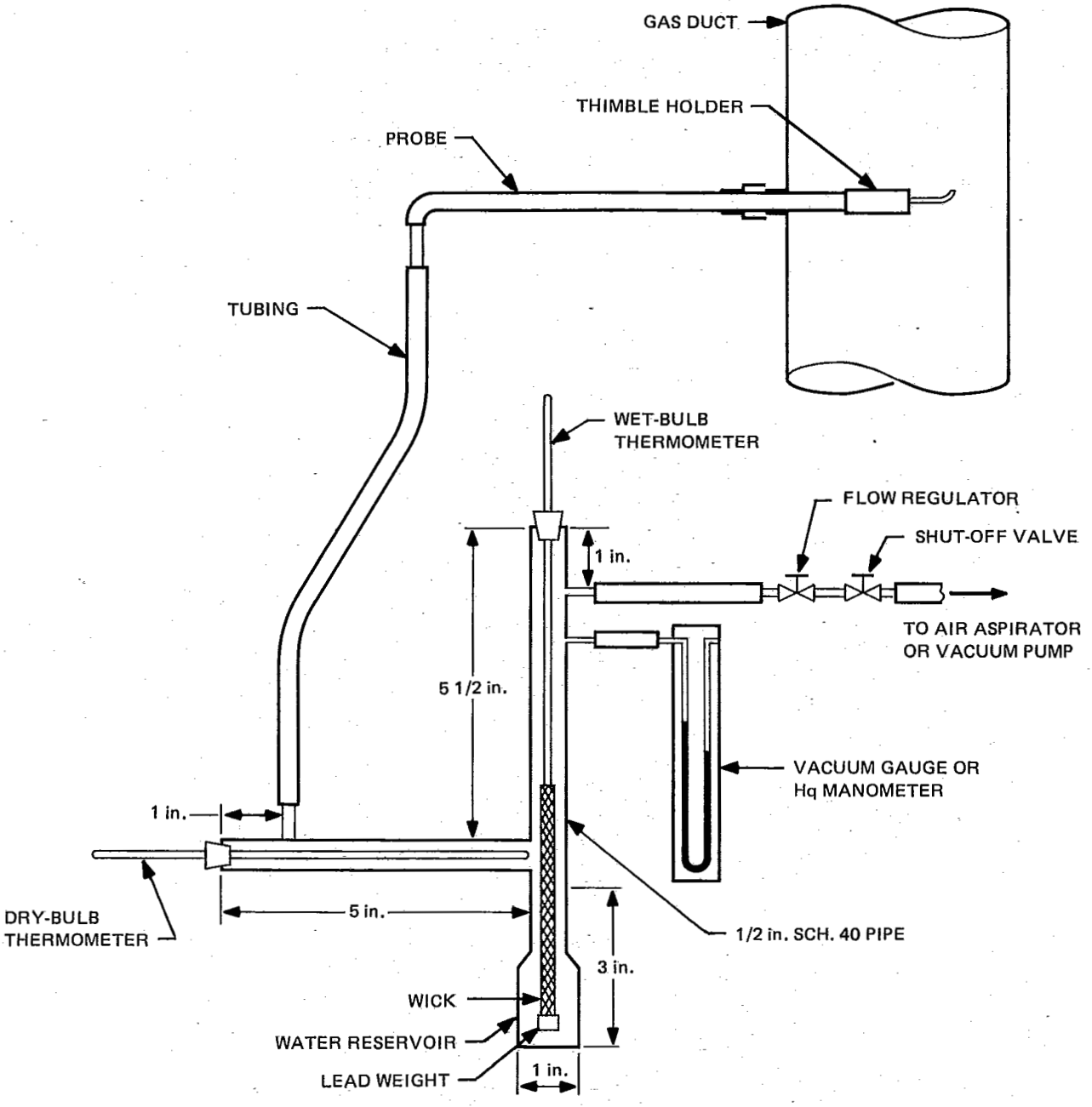


FIG. 5-1 MOISTURE DETERMINATION — WET/DRY BULB METHOD

*Notes:* 1. Critical dimensions only given for Wet/Dry Bulb Apparatus.
2. All tubing to be as short as possible.
3. The Wet/Dry Bulb Apparatus body must be provided with a wind barrier or insulation.



Copyright ASME International
Provided by IHS under license with ASME
No reproduction or networking permitted without license from IHS

Not for Resale

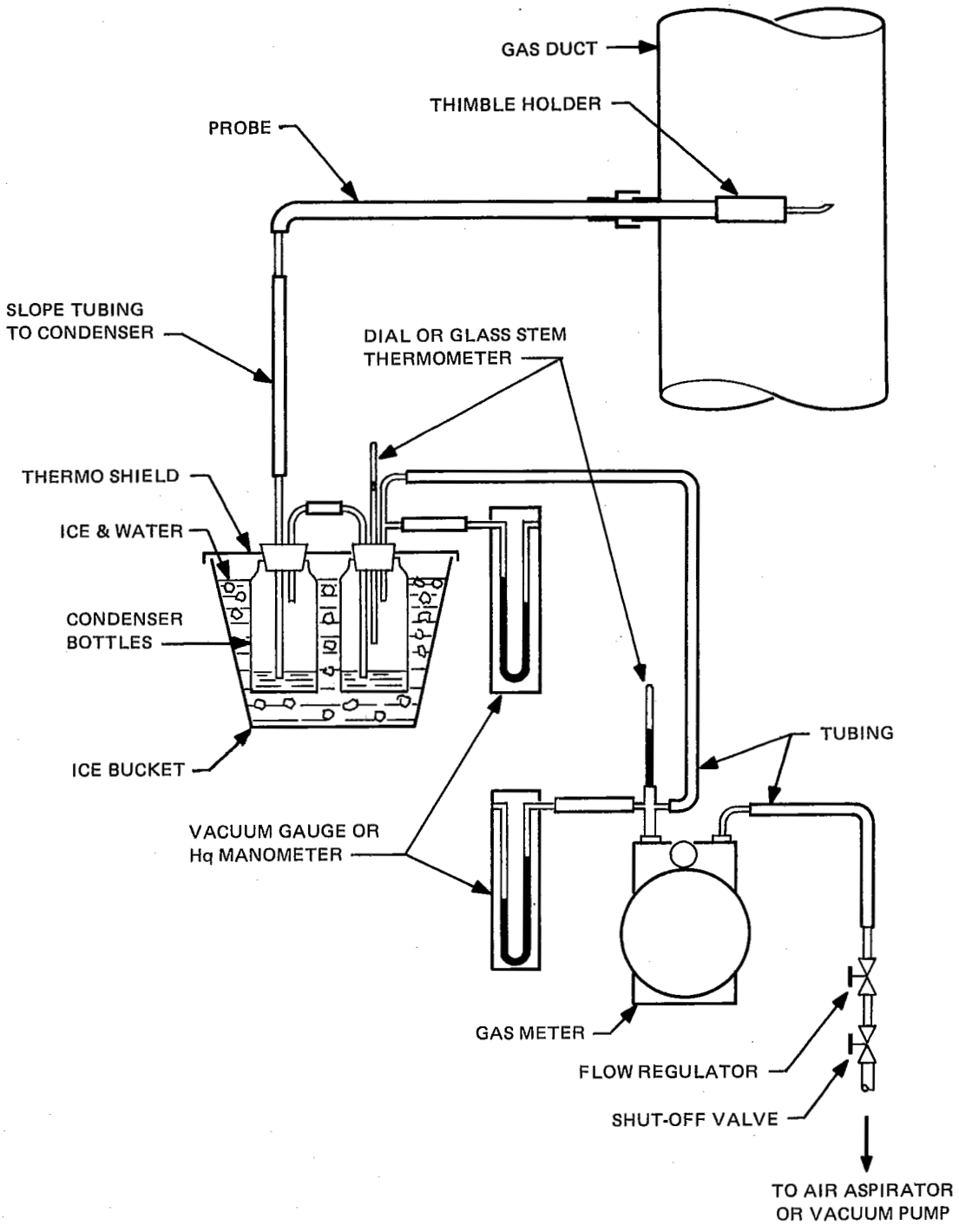


FIG. 5-2 MOISTURE DETERMINATION — CONDENSATE METHOD

*Notes:* 1. Laboratory condenser with accumulator may be substituted for bottles in ice bucket.
2. All tubing to be as short as possible.
3 Gas pump may be located before gas meter.



Copyright ASME International
Provided by IHS under license with ASME
No reproduction or networking permitted without license from IHS
Not for Resale

tion is explained in detail in Vol. 33 of ASME Transactions (see Reference [17], Section 7). The equation is:

$$P_{va} = P_{vw} - \frac{(P_i - P_{vw})\,(T_d - T_w)}{2800 - 1.3\,(T_w)}$$

(From PTC 19.18)

$P_{va}$ = vapor pressure of water in the apparatus, inches HG

$P_{vw}$ = saturation vapor pressure at $T_w$, inches Hg, from steam tables

$P_i$ = average total pressure at $T_w$, inches Hg

$T_d$ = dry-bulb temperature, °F

$T_w$ = wet-bulb temperature, °F

$M$ = percent moisture by volume in the gas

$$M = \frac{P_{va}}{P_i} \times 100$$

Example:

Total pressure at the wet-bulb thermometer is 27.64 in. mercury. The wet-bulb temperature is 120°F and dry-bulb temperature is 230°F.

$$P_{va} = P_{vw} - \frac{(P_i - P_{vw})\,(T_d - T_w)}{2800 - 1.3\,(T_w)}$$

$$P_{va} = 3.45 \text{ in. Hg} - \frac{(27.64 \text{ in. Hg} - 3.45 \text{ in. Hg})\,(230°\text{F} - 120°\text{F})}{2800 - 1.3 \times 120°\text{F}}$$

$$P_{va} = 2.44 \text{ in. Hg}$$

$$M = \frac{2.44 \text{ in. Hg}}{27.64 \text{ in. Hg}} \times 100$$

$$M = 8.8\%$$

Water vapor can also be determined by the condensation method (see Fig. 5-2). This method can be run in conjunction with particulate matter sampling or separately. The temperature of the sampling line preceding the condenser must be kept above the water dew point to prevent condensation. The temperature ($T_c$) of the gas at the condenser exit must be measured if no desiccant is used. Using only a condenser, the flue gas to the metering device is assumed saturated at the temperature leaving the condenser. The percent moisture in the metered flue gas is equal to the partial pressure of water vapor divided by the total pressure multiplied by one hundred (100).

$$M_1 = \frac{P_{vw}}{Pc} \times 100$$

$M_1$ = percent water vapor in metered gas, by volume

$P_{vw}$ = saturation pressure of water vapor at $T_c$, in consistent units

$P_c$ = absolute pressure at the exit of the condenser, in consistent units

$T_c$ = temperature at the exit of the condenser volume

The dry gas volume metered is equal to the wet volume measured by $1 - \frac{M_1}{100}$.

The volume of moisture collected in the condenser is usually measured in milliliters. The density of water is equal to one (1) gram per milliliter at the condition of the condenser. The volume of water collected is converted to the volume as a gas at the conditions of the gas meter.

$$\frac{\text{gm } H_2O}{453.6 \text{ gm/lb}} \times \frac{V_1}{18} = Q_1$$

$Q_1$ = cubic feet of $H_2O$ vapor collected in condenser at gas meter conditions

$V_1$ = volume of lb-mole at the gas meter inlet temperature and pressure

When a dessicant is employed at the exit of the condenser to remove the remaining moisture, the mass of moisture is equal to the difference between the final and initial dessicant mass. The mass of water is added to the mass of water collected in the condenser for determining the volume of water vapor in the sampled flue gas. The percent moisture in the flue gas sampled is:

$$\frac{(Q_1 + Q_2) \times 100}{Q_5 + Q_1 + Q_2}$$

$M_2$ = percent water vapor in the total sampled flue gas

$Q_1$ = volume of water collected in condenser

$Q_2$ = volume of water in the metered gas

$Q_5$ = volume of dry gas metered

$Q_5 + Q_1 + Q_2 = Q_w$ = volume of wet gas sampled

## 5.3 DENSITY OF WET FLUE GAS

When the percent moisture in the flue gas has been determined, the percent $CO_2$, $O_2$ and $N_2$ on a dry basis is



Copyright ASME International
Provided by IHS under license with ASME
No reproduction or networking permitted without license from IHS
Not for Resale

adjusted to a wet basis. This is done by multiplying $1 - \frac{\%H_2O}{100}$ times the dry gas percentage of $CO_2$, $O_2$, and $N_2$. The percent moisture from wet-bulb dry-bulb example is 8.8 percent water vapor.

| Gas | % by Vol. Dry | % by Vol. Wet | MW | MW Fraction |
|---|---|---|---|---|
| $CO_2$ | 13.5 x 0.912 | 12.3 | x 44 | 5.41 |
| $O_2$ | 5.2 x 0.912 | 4.7 | x 32 | 1.50 |
| $N_2$ | 81.3 x 0.912 | 74.2 | x 28 | 20.78 |
| $H_2O$ | 0 | 8.8 | x 18 | 1.58 |
| | 100.0 | 100.0 | | 29.27 |

The average molecular weight of wet flue gas is 29.27.

The wet flue gas denisty if found by dividing the MW by the volume of one pound mole (kilogram mole) at the conditions desired.

$$\text{Density} = \rho_w = \frac{29.27}{359\ ft^3/lb\text{-}mol} = 0.0815\ lb_m/ft^3$$

@ 32°F and 29.92 in. Hg (760 mm Hg)

or

$$= \frac{29.27}{22.415\ m^3/kg\text{-}mol} = 1.306\ kg/m^3$$

@ 0°C and 101.325 kPa (760 mm Hg)

## 5.4 VELOCITY HEAD MEASUREMENT AND VELOCITY READING

The velocity head measuring device should have a factor of one (1). If not, then the device should be calibrated in the gas stream where it is to be used. The velocity head of a gas stream is the difference between the total pressure ($P_t$) and static pressure ($P_{sd}$) in the duct. The basic equation for velocity at a point ($V_n$) is found in the ASME publication on Fluid Meters, Sixth Edition, page 105.

$$V_n = 96.26 \sqrt{\frac{(P_t - P_{sd})}{\rho_d}}$$

where

$V_n$ = flue gas velocity, ft/sec

$P_t$ = total pressure in the duct

$P_{sd}$ = static pressure in the duct

$P_{vd} = P_t - P_{sd}$ = velocity head

$\rho_d$ = density of the gas in the duct $lb_m/ft^3$

This equation is valid for 50 ft/sec (15.24 m/sec) and below. Above this value, the flue gas compressibility at the measuring device should be accounted for. When the velocity pressure is measured in inches water gage, the equation reduces to:

$$V_n = 18.27 \frac{P_{vd}}{\rho_d}\ \text{ft/sec, or } 1096 \frac{P_{vd}}{\rho_d}\ \text{ft/min}$$

## 5.5 ISOKINETIC SAMPLING

When a gas meter is used to measure total gas sampled, an orifice meter should be used as a quick means of adjusting flow rate for isokinetic conditions. The orifice meter should be designed according to criteria in the ASME publication on Fluid Meters, Sixth Edition. The meter can be calibrated against the gas meter in the same arrangement to be used for testing. The calibration should be done at five different flow rates.

$$K_n = \frac{CFM \times \rho_0}{\sqrt{h_0 \times \rho_0}}$$

$K_n$ = orifice coefficient

CFM = $ft^3$/min of gas passing through gas meter

$\rho_0$ = density of gas, $lb/ft^3$

$h_0$ = orifice differential, inches water gage

If only a gas meter is used, then the flow must be measured for a short interval of time and the flow rate adjusted accordingly. When an orifice meter is used to establish isokinetic flow, the relationship of velocity head to orifice differential is:

$$h_0 = \left(\frac{A_0 \times 1096}{k_n}\right)^2 P_{vd} \left(\frac{T_0 + 460}{T_d + 460}\right) \left(\frac{P_{sd}}{P_{s0}}\right)$$

If there is an appreciable amount of water vapor in the flue gas and a condenser is used, then the equation above should be corrected for the volume or mass flow change when the water vapor is condensed.

$A_0$ = area of sampler nozzle, $ft^2$ ($m^2$)
*Note:* ¼ in. or 3/8 in. diameter nozzles have been found suitable for most tests

$T_0$ = temperature of gas at orifice, °F

$T_d$ = temperature of gas in duct, °F



Copyright ASME International
Provided by IHS under license with ASME
No reproduction or networking permitted without license from IHS
Not for Resale

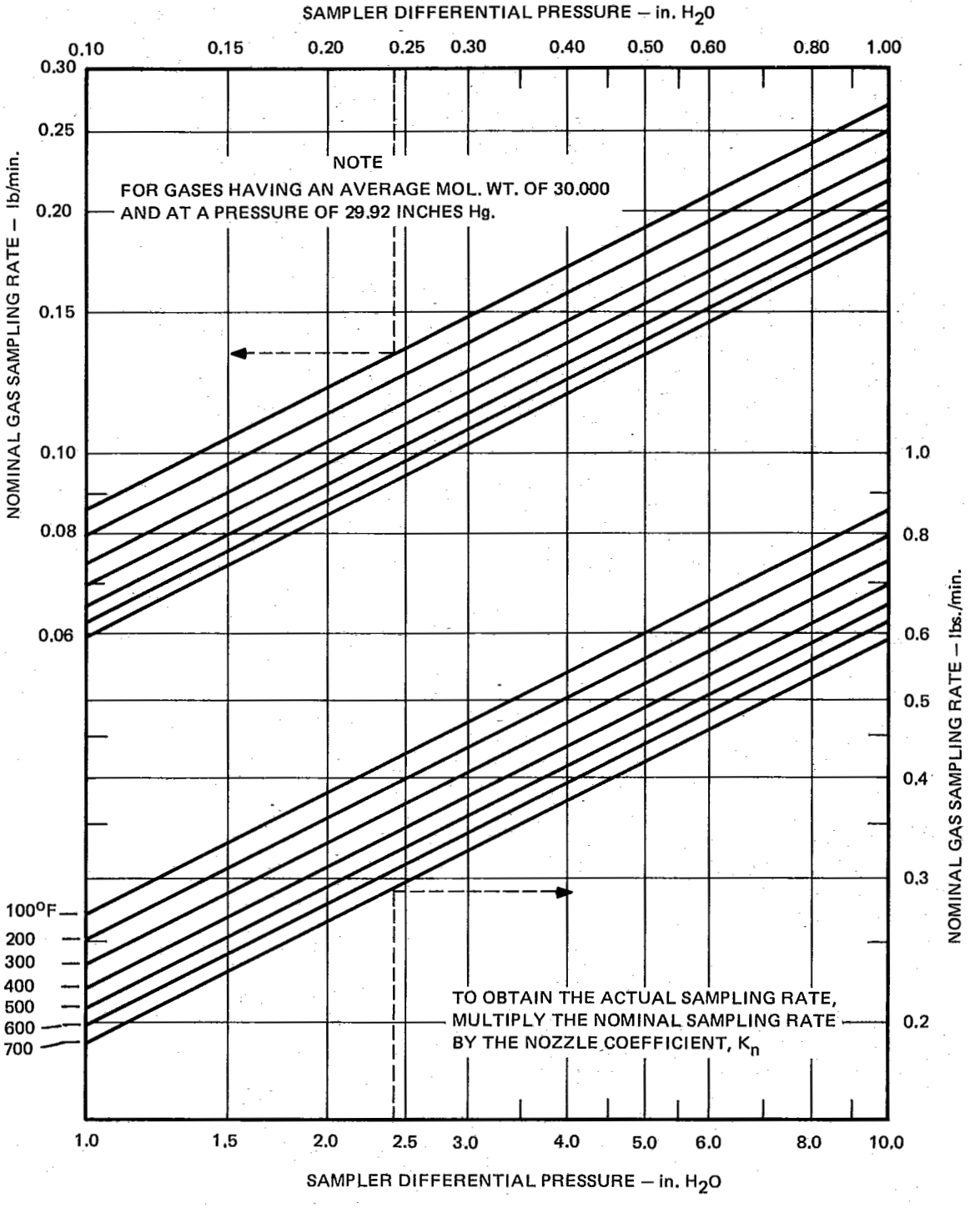


FIG. 5-3 GRAPH FOR DETERMINING NOMINAL SAMPLING RATE



Copyright ASME International
Provided by IHS under license with ASME
No reproduction or networking permitted without license from IHS
Not for Resale

$P_{sd}$ = absolute static pressure in duct, inches Hg

$P_{so}$ = absolute static pressure at discharge orifice inches Hg

The values of $T_0$, $T_d$, $P_{sd}$, $P_{so}$, $A_0$ and $K_n$ are known, or close approximations can be made, before testing begins. A graph can be drawn relating orifice differential ($h_0$) to a constant times the velocity head pressure ($P_{vd}$).

## 5.6 MEASURED FLUE GAS SAMPLED ON A DRY OR WET BASIS

(A) When a gas meter is used, the volume sampled on a dry basis or wet basis is explained in paragraph 5.2.

(B) When the sampled flue gas is measured with a calibrated orifice in the portion of the probe within the flue, the flue gas is measured on a wet basis. When the orifice is outside the flue it should precede any condenser, if a wet gas rate is to be measured.

A graph can be drawn (see Fig. 5-3) assuming a coefficient ($K_n$) of unity from the equation

$$G = \sqrt{h_o \times \rho_o}$$

where

$G$ = nominal gas sampling rate, lb/min

$h_o$ = orifice differential, in. $H_2O$

$\rho_o$ = density at the orifice, lb/ft$^3$ @ 29.92 in. Hg

The nominal gas sampling rate multiplied by time sampled at a point will be nominal gas mass sampled. The sum of the nominal gas masses of all the points sampled will equal the total nominal gas mass ($W_l$). The total corrected gas mass is:

$$W_{wg} = K_n \times W_l \times \sqrt{\frac{P_{oa}}{29.92 \text{ in. Hg}}}$$

where

$K_n$ = nozzle coefficient for the sampler, See Fig. 5-3

$W_{wg}$ = total pounds of wet gas sampled

$P_{oa}$ = average total pressure at the orifice exit, in Hg

The pounds of dry base sampled ($W_{dg}$) are

$$W_{dg} = W_{wg}\left(1 - \frac{\%\ H_2O}{100}\right)\left(\frac{\rho_{dg}}{\rho_{wg}}\right)$$

where

$\rho_{dg}$ = density of dry gas, lb/ft$^3$

$\rho_{wg}$ = density of wet gas, lb/ft$^3$

The pounds of $H_2O$ per pound of dry gas are equal to

$$\frac{W_{wg} - W_{dg}}{W_{dg}} = \frac{\text{lb } H_2O}{\text{lb dry gas}}$$

or

$$\frac{(Q_{wg} \times \rho_{wg}) - (Q_{dg} \times \rho_{dg})}{Q_{dg} \times \rho_{dg}}$$

where

$W_{wg}$ = total mass of wet gas sampled, lb

$W_{dg}$ = total mass of dry gas sampled, lb

$Q_{wg}$ = total volume of wet gas sampled, ft$^3$

$Q_{dg}$ = total volume of dry gas sampled, ft$^3$

## 5.7 PARTICULATE MATTER CONCENTRATION

The particulate matter concentration is determined from the combined mass of the filter catch and recovered probe deposits which make up the total mass of the particulate matter in the quantity of gas sampled.

Particulate matter concentration is usually expressed as mass per weight of gas, mass per volume of gas, or mass per heat input. A table in the Appendix lists factors for converting from a mass per lb basis to a weight per volume basis or vice versa. When the concentration is expressed on a mass per mass basis, it is a ratio and can be expressed on any consistent unit basis lb per lb, gr per gm, kg per kg, etc. When the particulate matter concentration is to be expressed on a mass per heat input basis, the following can be used.

$$\frac{\text{lb}}{10^6 \text{ Btu}} = \frac{\text{lb particulate matter/lb dry gas} \times W_g'}{\text{Btu/lb as-fired fuel}} \times 10^6$$

$W_g'$ = $\frac{\text{lb dry gas}}{\text{lb as-fired fuel}}$ (see PTC 4.1, Section 7.3.2.02)

$\frac{\text{Btu}}{\text{lb}}$ as-fired fuel, obtained from fuel analysis



Copyright ASME International
Provided by IHS under license with ASME
No reproduction or networking permitted without license from IHS
Not for Resale

# SECTION 6 – REPORT OF RESULTS

## 6.1 IMPORTANCE OF REPORTS

**6.11** Most of the tests conducted in accordance with this Code are performed to obtain data on process emissions or the performance of emission control systems for operation, commercial, and/or regulatory purposes. Therefore, the accuracy and completeness of the test reports are of the utmost importance.

The test report may be subject to scrutiny with respect to the nature and conduct of the tests performed. The actual test data will probably be correlated with the design and operations of the emission source and emissions control systems involved. Often, tests conducted for one particular purpose are later utilized to provide useful information different in nature than that for which the test was originally conducted.

**6.12** The purpose of this Section of the Code is to provide guidance with respect to what information should be obtained during the test program and to recommend the formats for recording this information and presenting it in a suitable manner to meet the rigid requirements cited above.

## 6.2 REPORTS AND THEIR CONTENT

A properly conducted test program should culminate in a final test report which contains the following information in a well organized format—as complete and accurate as possible.

(1) Reason(s) for conducting test and the information desired from the test results.

(2) Description of the emission source being tested, with data covering both the source itself (e.g., boiler, incinerator, etc.) and all equipment which may directly or indirectly affect test results (e.g., electrostatic precipitator, fans, etc.).

(3) Operating conditions of the emission source and all the other equipment and systems listed above, including the nature and flow rates of all material consumed and/or emitted during the test period.

(4) Identification and description of the sampling train and test procedures used with information regarding the basis of their selection.

(5) Outline of the manner in which the tests were conducted with commentary on any deviation from normal action which may have been necessary. Include calibration procedures.

(6) Test results – both the detailed tabulation of data taken during the test and the calculated test results obtained therefrom.

(7) Summary of test results correlated with pertinent operating data and other factors involved. Commentary on the test results and their significance may or may not be required, dependent upon the nature of the test assignment.

## 6.3 RECOMMENDED REPORTING PROCEDURES

The following is presented as a guide for obtaining and presenting the data necessary to fulfill the test objectives. These recommendations apply to a typical emission test program. The great variation in the nature and conditions of any specific test program may necessitate deviation from these recommended procedures. However, in all cases, the reporting procedure should be so planned and carried out as to achieve the requirements of the above stated criteria for the final test report.

### 6.31 Presurvey Report

In order to properly plan the test program, a preliminary survey of the emission source and the test site should be made. The information obtained during this presurvey should provide considerable help in the selection of the proper testing procedures to be employed and the preparation of a more organized test plan.

The presurvey should include the acquisition of data on the design, operation, and physical arrangement of the emission source and the related equipment of concern. This data can be obtained from a study of pertinent design and operating data available from the owner, operator, and vendors involved plus actual inspection of the test



Copyright ASME International
Provided by IHS under license with ASME
No reproduction or networking permitted without license from IHS
Not for Resale

area. The availability and usefulness of installed instrumentation, including meteorological, should also be investigated.

The use of a questionnaire or presurvey report form, suitable for the type of emission source involved, can be very helpful. Samples of such forms for combustion sources, incinerators, and industrial processes are shown in Figs. 6-1, 6-2, and 6-3 of this Section. These forms should be augmented by appropriate process flow diagrams and scaled plan and elevation drawings of the equipment involved, including the actual sampling site. A cross section drawing of the duct or stack at the sampling location, showing exact location of sampling ports, should be prepared. Actual sample point locations should be added to this when determined.

### 6.32 Gas Flow Measurement, Sampling, and Analytical Data

The wide variation in the type of source to be tested, the nature and conditions of the test, and the test procedures employed necessitate a wide variation in the format of the data sheets and report forms required. Typical forms for gas velocity and volume data, field sampling meter data, and analytical data for the samples collected, fuel burned, etc., are shown in Figs. 6-4, 6-5, and 6-6, respectively.

The data taken should not be limited to only that which may seem essential to the current objectives of the test program. Any supplementary data and observations which may later be useful should be included to the maximum extent practicable.

### 6.33 Operating Data

Again, the wide variation in the type of source to be tested and the nature and conditions of the test necessitate a wide variation in the format of the forms needed to record and report operating data. Typical forms for boilers, incinerators, and industrial processes are shown in Figs. 6-7, 6-8, and 6-9, respectively. These forms should be supplemented by similar forms covering the detailed operating data for the other systems and equipment involved in the test – emission control systems, gas flow systems, etc.

Where emission control systems are involved, such as electrostatic precipitators, complete operating data should be taken. For example, in the case of electrostatic precipitators, the data obtained should include (but not be limited to) the following:

(1) Physical condition of equipment during and prior to the test period.

(2) Settings and readings of all controls and instrumentation, both electrical and mechanical.

(3) Observations regarding the actual operation of the equipment involved – e.g., removal of fly ash from the precipitator hoppers, malfunction of voltage controls, air and gas leaks, etc.

(4) Meteorological data which may bear on the test results or which may bear upon the visual indication of emissions and their transport from the source into the ambient atmosphere.

### 6.34 Calculations

The calculation procedures used to compute the final test results are an important part of a test report. The test procedures used, the conditions of the test, and the computation facilities available can vary greatly and will determine the methods of calculation and their presentation in the report. The calculation section of a test report may vary in format – ranging from a computer printout of test data and calculated results, accompanied by an example of a typical set of calculations, to a complete set of manually performed calculations presented on appropriate forms. One such form is shown in Fig. 6-10.

The primary criteria in presenting all or representative calculations in a test report are that the nomenclature and units of measurement used are defined and that the source of all input data, unfamiliar formulae, constants, and conversion factors are clearly indentified. Section 2 of the Code contains a Table of Terms which should be utilized to the maximum extent possible in the tabulation of test data and the calculation and presentation of test results.

### 6.35 Emission Data

Both a detailed report of the calculated emission data obtained during the test and a summary of the emission test results, correlated with pertinent operating parameters, are usually required in the final test report. A typical form for presenting detailed emission data from a combustion source is shown in Fig. 6-11 and a typical form for presenting a summary of emission test data, correlated with pertinent operating data, is shown in Fig. 6-12. Both are subject to considerable variation to meet the requirements and conditions of a specific test program.

### 6.36 Responsibility for Test Results

Depending upon the nature and requirements of the test program, it may be necessary to assign the responsibility for obtaining valid test data and preparation of the reports to a specific party or parties. If this be the case, the



Copyright ASME International
Provided by IHS under license with ASME
No reproduction or networking permitted without license from IHS
Not for Resale

FIG. 6-1 SAMPLE PRESURVEY FORM FOR COMBUSTION SOURCES

Name of Company_____

Address_____

Phone_____ Person to Contact_____

Date of Survey_____ By_____

Entry Requirements_____

Location and Designation of Boiler to Be Tested_____

Type of Boiler_____ Capacity_____ $10^3$ lb steam/hr

Type of Fuel_____ Steam Pressure_____ psig

Btu Value_____ Steam Temperature_____ °F

Sulfur Content, % by Weight_____

Fuel Composition-Proximate Analysis_____

Fuel Composition-Ultimate Analysis_____

Type and Efficiency of Air Pollution Control Equipment_____

_____

Is Fly Ash Reinjected?_____

Collection Efficiency, %_____

Approximate Opacity of Stack Gases, %_____

Normal Range of Steam Fluctuations_____ To_____

Can Constant Load Be Maintained?_____

If So, How Long?_____

Conditions Under Which Boiler Can Be Tested:

Maximum Steam Load_____

Expected Fuel Rate_____

Can This Be Measured?_____

Excess Air Rate_____

Ash Withdrawal Schedule_____

Soot Blowing Schedule_____

Provide complete sketches of entire boiler and flue gas ducting. Indicate proposed locations of test points, sampling port size, location of fans, location of pollution control equipment, obstructions at sampling site, necessary scaffolding, final exit stack dimensions, location of electrical power, and type of sockets.

(Reference [30], Section 7)



Copyright ASME International
Provided by IHS under license with ASME
No reproduction or networking permitted without license from IHS

Not for Resale

FIG. 6-2 SAMPLE PRESURVEY FORM FOR INCINERATORS

Name of Company_____

Address_____

Phone_____ Person to Contact_____

Date of Survey_____ By_____

Entry Requirements_____

Location and Name of Unit to Be Tested_____

_____

Type of Incinerator_____

Capacity,_____ tons/hr

Type of Air Pollution Control Equipment_____

Collection Efficiency, %_____

Normal Charging Rate_____

How Is Charging Rate Measured?_____

Operating Schedule_____

Type and Quantity of Auxiliary Fuel_____

Excess Air Rate_____

Overfire and Underfire Air Rates_____

Temperature of Flue Gases at Proposed Test Points_____

Provide complete sketches of entire incinerator and flue gas ducting. Indicate proposed locations of test points, sampling port size, location of fans, location of pollution control equipment, obstructions at sampling site, necessary scaffolding, final exit stack dimensions, location of required electrical power, and type of socket.

Additional Desirable Information:

Refuse Analysis, if Available_____

Approximate Opacity of Stack Gases_____

Normal Variations in Charging Rate_____

Residue Removal. Method_____

Schedule_____

Where and How Temperature Are Measured Through System_____

(Reference [30], Section 7)



Copyright ASME International
Provided by IHS under license with ASME
No reproduction or networking permitted without license from IHS

Not for Resale

FIG. 6-3 SAMPLE PRESURVEY FORM FOR INDUSTRIAL PROCESSES

Name of Company _____

Address _____

Phone _____ Person to Contact _____

Date of Survey _____ By _____

Entry Requirements _____

Type of Process _____

Location of Process _____

Operating Schedule _____

Process Description _____

Process Feed Rates _____

_____

_____

_____

Expected Emissions

Type Concentration Quantity

Type and Efficiency of Air Pollution Control Equipment _____

_____

Opacity of Exit Gases _____

Expected Stack-Gas Parameters at Test Location _____

_____

Temperature, °F _____

Pressure, psig _____

Volume, acfm _____

Composition, % $H_2O$ _____

% $N_2$ _____

% $O_2$ _____

_____

_____

_____

Ambient Conditions at Test Site(s) _____

Temperature _____

Noxious Gases _____

Weather Protection _____

Required Safety Gear _____

Provide complete sketches of entire process and exit gas ducting. Indicate proposed locations of test points, sampling port size, location of fans, location of pollution control equipment, obstructions at sampling site, necessary scaffolding, final exit stack dimensions, location of electrical power, and type of sockets, location and nature of water supply.

(Reference [30], Section 7]



Copyright ASME International
Provided by IHS under license with ASME
No reproduction or networking permitted without license from IHS

Not for Resale

FIG. 6-4 SAMPLE FORM FOR GAS VELOCITY AND VOLUME DATA

Test No._____

Location_____

VELOCITY TRAVERSE DATA

| Point | Position, inches[a] | Reading, $\Delta p$ inches of $H_2O$ | $\sqrt{\Delta p}$ | $T_s$, °F |
|---|---|---|---|---|
| | | | | |
| | | | | |
| | | | | |

FIG. 6-5 SAMPLE FORM FOR FIELD SAMPLING METER DATA

Plant _____ Filter No. _____

Run Number _____ Barometric Pressure, in. Hg _____

Location _____ Assumed Moisture, % _____

Date _____ Time _____ Assumed Meter Temp., °F _____

Operator _____ Stack Gauge Pressure, in. $H_2O$ _____

Sample Box Number _____ Probe Tip Diameter, in. _____

Meter Box Number _____ 'C' Correction Factor _____

ΔH@ _____

| Point | Time, min. | Dry Gas Meter | | | Velocity Head $\Delta p$, in. $H_2O$ | Orifice ΔH, in. $H_2O$ | Pump Vacuum, in. Hg | Box Temp., °F | Impinger Temp., °F | Stack Temp., °F |
|---|---|---|---|---|---|---|---|---|---|---|
| | | Volume, $ft^3$ | Inlet Temp., °F | Outlet Temp., °F | | | | | | |
| | | | | | | | | | | |
| | | | | | | | | | | |
| | | | | | | | | | | |
| | | | | | | | | | | |
| | | | | | | | | | | |
| | | | | | | | | | | |
| | | | | | | | | | | |
| | | | | | | | | | | |
| | | | | | | | | | | |
| | | | | | | | | | | |
| | | | | | | | | | | |
| | | | | | | | | | | |

COMMENTS:

Leakage Rate @ _____ in. Hg = _____

(Reference [30], Section 7)





Copyright ASME International
Provided by IHS under license with ASME
No reproduction or networking permitted without license from IHS
Not for Resale

FIG. 6-6 SAMPLE FORM FOR PARTICULATE MATTER ANALYSIS DATA

WEIGHT OF PARTICULATE MATTER COLLECTED

| Field Container Number | Total Final Weight, mg | Tare Weight, mg | Weight Gain, mg |
|---|---|---|---|
| Pri. Filter No. | | _____ Filter<br>_____ Container | |
| Sec. Filter No. | | | |
| Nozzle No. | | | |
| Probe Wash No. | | | |
| No. | | | |

Plant _____

Run. No. _____

Location _____

Received from _____ Received by _____

Analyzer _____

Date Analyzed _____

Total Weight of Particulate Matter Collected, $W_p$ = _____ × $2.2 \times 10^{-6}$ = _____ lb

× $15.4 \times 10^{-3}$ = _____ gr

VOLUME OF MOISTURE COLLECTED

| | Final Volume, ml | Initial Volume or Weight | Volumetric Gain, ml |
|---|---|---|---|
| Impingers | | –200 ml | |
| Silica Gel Container No. | | – g | |

Total Volume of Water Collected, $V_T$ = _____ ml × 0.047 = _____ scf

(Reference [30], Section 7)





Copyright ASME International
Provided by IHS under license with ASME
No reproduction or networking permitted without license from IHS
Not for Resale

FIG. 6-7 SAMPLE FORM FOR BOILER OPERATING DATA

Test No._____ Date_____

Name of Company_____

Location and Description of Boiler_____

_____

Type of Boiler_____ Capacity_____ 1000 lb steam/hr

Type of Fuel_____

Date Recorder_____

Time_____

Fuel Rate

Steam Rate
1000 lb/hr

Combustion
Air Rate,
1000 lb/hr

% Excess Air
Flue Gas Analysis:
% $O_2$
% $CO_2$

Steam Pressure

Steam
Temperature

I.D. Fan, rpm

I.D. Fan, amps

Firing Data:
Oil Pressure (if oil fired)
Oil Temperature (if oil fired)
Burner Tilt
Windbox Damper Settings

Pressures, in. $H_2O$

Furnace Outlet
Collector Inlet
I.D. Fan Inlet

Plume Opacity

Fuel Composition (As Weighed),
Btu/lb
% Moisture

% Ash

% *S*

% Volatile Matter

% Fixed Carbon

Ultimate Fuel Analysis

(Reference [30], Section 7)



Copyright ASME International
Provided by IHS under license with ASME
No reproduction or networking permitted without license from IHS

Not for Resale

FIG. 6-8 SAMPLE FORM FOR INCINERATOR OPERATING DATA

Test No._____ Date_____

Name of Company_____

Location and Designation of Unit_____

_____

Type of Incinerator_____

Type of Control Equipment_____

Type of Grate_____

Grate Speed_____

Type of Refuse Burned_____

Approximate Moisture Content_____

Data Recorder_____

| Time | Material Charged, lb | Primary Chamber Draft | | Secondary Chamber | | Plume | I.D. Fan | |
|---|---|---|---|---|---|---|---|---|
| | | Overfire, in. $H_2O$ | Underfire, in. $H_2O$ | Draft, in. $H_2O$ | Temp., °F | Opacity % | rpm | amp |
| | | | | | | | | |
| | | | | | | | | |
| | | | | | | | | |
| | | | | | | | | |
| | | | | | | | | |
| | | | | | | | | |
| | | | | | | | | |
| | | | | | | | | |
| | | | | | | | | |
| | | | | | | | | |
| | | | | | | | | |
| Tot. | Tot. | Avg. | Avg. | Avg. | Avg. | Avg. | | |

*% of Time Afterburners Are in Operation*_____, if used. Plume Observer:_____

Fuel Rate to Afterburner_____, if used. Certification:_____

(Reference [30], Section 7)



Copyright ASME International
Provided by IHS under license with ASME
No reproduction or networking permitted without license from IHS

Not for Resale

FIG. 6-9 SAMPLE FORM FOR PROCESS OPERATING DATA

Test No. _____ Date _____

Name of Company _____

Location and Description of Process _____

_____

Capacity and Characteristics of Process and/or Product _____

_____

_____

_____

Raw Materials _____

Fuel Used _____

Time _____

Raw Material Feed Rate

Fuel Rate
Reactor Temperature
Reactor Pressure
Product Rate
Sidestream Rates

Recycle Stream
Rates

Exit Plume
Opacity _____

(Reference [30], Section 7)



Copyright ASME International
Provided by IHS under license with ASME
No reproduction or networking permitted without license from IHS

Not for Resale

FIG. 6-10 SAMPLE FORM FOR SAMPLING CALCULATIONS

Plant No. _____ Calculated by _____

Run No. _____ Checked by _____

Location _____ Date _____

Meter Volume _____

Leakage Volume _____ (Leakage rate X sampling time)

Net Sample Volume, $Q_m$ _____ $ft^3$

Average Meter Temperature, $T_m$ _____ °F + 460 = _____ °R

$P_m = P_b =$ _____ in. Hg

Standard Sample Volume,

$Q_{ms} = 17.7 \times Q_m \times \frac{P_b}{T_m} = 17.7 \times$ _____ X _____ = _____ $ft^3$

Equivalent Moisture Volume, $Q_v =$ _____ scf (Fig. 6-6)

Total Sample Volume, $Q_t = Q_{ms} + Q_v =$ _____ + _____ = _____ scf

Particulate Sample Weight, $W_p =$ _____ gr (Fig. 6-6)

Particulate Concentration, $C =$ _____ / $Q_t$ = _____ gr/scf

Particulate Concentration,

dry basis $C_d = C \times \frac{100}{100 - W} =$ _____ gr/dry scf

where: $W$ = % moisture in flue gas

Emission Rate,

lb/hr, $E = C \times Q_{ss} \times 0.00857 =$ _____ X 0.00857 = lb/hr

where: $Q_{ss}$ = total flue gas flow rate in $ft^3$/min

$$\% \text{ Isokinetic, } I = \frac{V_s}{\frac{Q_t}{t \times A_n} \times \frac{T_s}{530} \times \frac{29.92}{P_b}} \times 100 = \text{_____ \%}$$

where:

$t$ = sample time, min

$A_n$ = area of sample nozzle, $ft^2$

$V_s$ = stack-gas velocity, ft/min (Fig. 6-4)

(Reference [30], Section 7)



Copyright ASME International
Provided by IHS under license with ASME
No reproduction or networking permitted without license from IHS
Not for Resale

FIG. 6-11 SAMPLE FORM FOR PRESENTING EMISSION DATA — COMBUSTION UNIT

| Test No. | Steam Rate, 1000 lb/hr | Fuel Rate | Flue Gas | | | | Particulate Matter | | |
|---|---|---|---|---|---|---|---|---|---|
| | | | Volume, scfm[a] | Temp., °F | % $CO_2$ | % $H_2O$ | gr/scf | lb/1000 lb | lb/$10^6$ Btu |
| | | | | | | | | | |

[a]Standard cubic feet per minute at 70° F and 29.92 in. Hg.

(Reference [30], Section 7)





Copyright ASME International
Provided by IHS under license with ASME
No reproduction or networking permitted without license from IHS
Not for Resale

FIG. 6-12 SAMPLE FORM FOR SUMMARY OF EMISSION TEST DATA

Test No._____
Date_____
Name_____
Address_____
_____

Process Tested_____

1. Sampling Station_____
2. Material Collected_____
3. Operating Condition_____
4. Avg. Flue Gas Velocity, ft/min_____
5. Avg. Flue Gas Temp., °F_____
6. Area of Duct, $ft^2$_____
7. Gas Flow Rate, scfm_____
8. Sampling Nozzle Diam., in._____
9. Avg. Meter Sampling Rate, $ft^3$/min_____
10. Testing Time, min_____
11. Avg. Meter Temp., °F_____
12. Sample Gas Vol.— Meter Cond., $c^3$_____
13. Sample Gas Vol.— Standard Cond., scf_____
14. Water Vapor Condensate, ml Volume, scf_____
15. Total Sample Gas Volume, scf_____
16. Weight Collected, grams_____
17. Total Weight, *g*_____
18. Concentration, gr/scf_____
19. Concentration, gr/scf @ 12% $CO_2$_____
20. Concentration, % by volume_____
21. Concentration, ppm by volume_____
22. Emission Rate, lb/hr_____

COLLECTOR EFFICIENCY

23. Material to Collector, lb/hr_____
24. Loss to Atmosphere, lb/hr_____
25. Efficiency, %_____

Test Conducted by_____

Analysis by_____

Calculations by_____

(Reference [30], Section 7)



Copyright ASME International
Provided by IHS under license with ASME
No reproduction or networking permitted without license from IHS
Not for Resale

final test report should be certified or validated in a manner appropriate to the circumstances involved and in accordance with the mutual agreements of parties concerned.

In all cases, the final test report should clearly identify all the personnel and organizations involved in the conduct of the test and the determination of test results.



Copyright ASME International
Provided by IHS under license with ASME
No reproduction or networking permitted without license from IHS

Not for Resale

# SECTION 7 – BIBLIOGRAPHY


[1] Performance Test Code 21—"Dust Separating Apparatus," ASME, (1941).

[2] Performance Test Code 27 – "Determining Dust Concentration in a Gas Stream," ASME, (1957).

[3] Performance Test Code 28—"Determining the Properties of Fine Particulate Matter," ASME, (1965).

[4] Crandall, W. A., "Determining Concentration and Nature of Particulate Matter in Stack Gases," ASME Paper 71-WA/PTC 8.

[5] Performance Test Code 1 – "General Instructions," ASME (1970).

[6] Supplements on Instruments and Apparatus, ASME (latest editions)
PTC 19.1 – "General Considerations"
PTC 19.2 – "Pressure Measurement"
PTC 19.3 – "Temperature Measurement"
PTC 19.10 – "Flue and Exhaust Gas Analysis"
PTC 19.12 – "Measurement of Time"
PTC 19.18 – "Humidity Determinations"

[7] "Fluid Meters," 6th Edition, ASME (1971), and Interim Supplement.

[8] Performance Test Code 4.1 – "Steam Generating Units," ASME (1964).

[9] Performance Test Code 10 – "Centrifugal Mixed and Axial Flow Compressors and Exhausters," ASME (1965).

[10] Performance Test Code 11 – "Fans," ASME (1946), revision to be published.

[11] ASME Guide SI-1, "Orientation and Guide for Use of SI Units," 8th Edition, ASME.

[12] "Test Procedure for Determining Performance of Particulate Emission Control Equipment," Industrial Gas Cleaning Institute, Stamford, Connecticut.

[13] "Methods for Determination of Velocity, Volume, Dust, and Mist Content of Gas," Bulletin WP-5D 7th Edition, Western Precipitation Division of Joy Manufacturing Company, Los Angeles, California.

[14] "Standard Methods of Test for Average Velocity in Duct (Pitot Tube Method)," ASTM D-3154-72, American Society for Testing and Materials, Philadelphia, Pennsylvania.

[15] "Standard Methods for Sampling Stacks for Particulate Matter," in 1973 Book of ASTM Standards, Part 23, ASTM D-2928-71, American Society for Testing and Materials, Philadelphia, Pennsylvania.

[16] "Standards of Performance for New Stationary Sources," 40 CFR Part 60, Environmental Protection Agency, Federal Register, Vol. 36, No. 247, Dec. 23, 1971 and all supplements issued thereto.

[17] "Rational Psychrometric Formulae—Their Relation to the Problems and Meterology and Air Conditioning," W. H. Carrier, *Transactions of the ASME,* Vol. 33, 1005 (1911).

[18] "A Contribution to the Problems of the Action of Sulfuric Acid on the Dew Point Temperature of Flue Gases," P. Muller, *Chem. Eng. Tech.,* Vol. 31, 345 (1959).

[19] "The Determination of Sulfur Trioxide in Flue Gases," H. Goksoyr and K. Ross, *J. Inst. Fuel,* Vol. 35, 177 (1962).

[20] "The Relationship Between Acid Dew Point and Sulfur Trioxide Content of Combustion Gases," H. Goksoyr and K. Ross, Thornton Research Center Shell Research, Ltd. (1962).

[21] "The Determination of Sulfur Trioxide and Acid Dew Point in Flue Gas," E. S. Lisle and J. D. Sensenbaugh, *Combustion* Vol. 36, No. 7, 12-19 (1965).

[22] "A Review of Fire-Side Corrosion in Utility and Industrial Boilers," A. L. Plumley, J. Jonakin, and R. E. Vuia, *Canadian Chemical Processing 51, 52* June and *70* July (1967).

[23] "Oxidation of Sulfur Dioxide in Stainless Steel and Inconel Sampling Probes," C. P. Fenimore, *Combustion and Flame,* Vol. 18, 469 (1972).

[24] "Chemical Composition of Particulate Air Pollutants from Fossil-Fuel Combustion Sources," L. J. Hellenband et al., NTIS Document PB-210-009, March 1973.

[25] "On the Filtration of Alundum Thimbles and Other Sampling Filters," Bulletin 25 (January 11, 1973), Hemeon Associates, Pittsburgh, Pa.

[26] "ASHRAE Guide and Data Book," American Society of Heating, Refrigeration, and Air Conditioning Engineers.

[27] Hemeon, W. C. L., and Black, A. W., "Stack Dust Sampling: In-Stack or EPA Train," *Journal of the*




Copyright ASME International
Provided by IHS under license with ASME
No reproduction or networking permitted without license from IHS

Not for Resale

*APCA*, Vol. 22, No. 7, July 1972, Air Pollution Control Association, Pittsburgh, Pennsylvania.

[28] Gnyp, A. W., Price, S. J. W., St. Pierre, C. C., and Steiner, J., "An Information Search and Evaluation of Factors Affecting Stack Sampling," 1970, Industrial Research Institute, University of Windsor, Windsor, Canada.

[29] Burton, C. L., "Quantitation of Stack Gas Flow," *Journal of the APCA*, Vol. 22, No. 8, August 1972, Air Pollution Control Association, Pittsburgh, Pennsylvania.

[30] "Administrative and Technical Aspects of Source Sampling for Particulates," EPA 450/3-74-047, August 1974, U.S. Environmental Protection Agency, Research Triangle Park, North Carolina 27711.

[31] "Federal Register," Vol. 40, No. 194, October 6, 1975 (pages 46252 and 46253), U.S. Environmental Protection Agency, Research Triangle Park, North Carolina 27711.

[32] Hawksley, P. G. W., Badzioch, S., and Blackett, J. H., "Measurement of Solids in Flue Gases," British Coal Utilization Research Association, Leatherhead, England 1961.

[33] Gerhart, P. M., Nuspl, S. P., Wood, C. O., and Lovejoy, S. W., "An Evaluation of Velocity Probes for Measuring Nonuniform Gas Flow in Large Ducts," ASME Paper 78-WA/PTC-1 (supplemented by "Air and Gas Flow Measurement using the Fecheimer Probe" – an in-house Babcock & Wilcox document written by S. L. Morse, March 29, 1968—obtainable from the Babcock & Wilcox Company, Barberton, Ohio).

[34] "New Stationary Sources Performance Standards; Electric Utility Steam Generating Units," 40 CFR Part 60, Environmental Protection Agency, Federal Register, Vol. 44, No. 113, June 11, 1979.

[35] "Standards of Performance for New Stationary Sources; Kraft Pulp Mills," 40 CFR Part 60, Environmental Protection Agency, Federal Register, Vol. 41, No. 187, Sept. 24, 1976 (contains EPA Method 17).



Copyright ASME International
Provided by IHS under license with ASME
No reproduction or networking permitted without license from IHS

Not for Resale

# SECTION 8 – APPENDIX

## 8.1 INDEX TO APPENDIX

| Designation | Subject |
|---|---|
| A | Design and Selection of Sampling Trains |
| B | Sampling Probes and Particulate Matter Collection Apparatus |
| C | Particulate Matter Sampling Systems |
| D | Filtration Efficiency of Filters for Fine Particulate Matter |
| E | Sampling in Low Velocity Gas Streams |
| F | Particulate Matter Collection and the Effect of Condensed $SO_3$ |
| G | Typical Gas Velocity and Particulate Matter Concentration Profiles |
| H | Methods for Determining Number and Location of Sampling Areas |
| I | Instrumentation for Determining Gas Velocity |
| J | Design and Construction of Field Operating Graphs |
| K | Graphs and Tables of Useful Data |
| L | SI System for Units of Measurement |

## APPENDIX A

### DESIGN AND SELECTION OF SAMPLING TRAINS

A wide variety of apparatus assemblies can be envisioned, all of which would be equally capable of accurate sampling of particulate matter in a normal gas stream. The differences between them will be in their relative convenience as to portability, assembly, and handling during operation when used in a wide variety of sampling situations and in their relative potential for inducing accidental or systematic error.



Copyright ASME International
Provided by IHS under license with ASME
No reproduction or networking permitted without license from IHS
Not for Resale

Individual preferences, based on personal familiarity with a particular apparatus or other subjective criteria, will have some influence in the selection of sampling apparatus. Nevertheless, there are important differences of a practical nature between them which are important to recognize. These are set forth in the following comparisons of the three principal categories of sampling train design:

A. High volume sampling train.
B. Low volume sampling train with exterior filter.
C. Low volume sampling train with in-stack filter.

## A. HIGH VOLUME SAMPLING TRAIN

Sampling trains in this category may handle, typically, 5-10 to 40-50 CFM, using sample probe tubing of ¾ in. to 1¼ in. diameter. The filters are usually located outside of the duct or stack.

### Advantages

(1) The high ratio of sample gas flow rate to sampling system wall area minimizes the errors due to loss of particulate matter on the tubing walls between the nozzle and the filter. Hence, the special precautions necessary to avoid errors from this cause are minimized to some extent.

(2) Heat losses from the sample gas stream in passing through the connecting tubing, for the same reason, are small relative to the total heat content of the sample gas stream – making it easier to maintain the temperature of the gas stream above the dewpoint.

(3) A null pressure nozzle can be applied to the characteristically large diameter tubing more successfully than to the small tubing.

(4) The greater quantity of sample collected per unit of time reduces the relative magnitude of errors resulting from sample handling, weighing, etc.

### Disadvantages

(1) Its greater mass and bulk may be inconvenient as to transportation and to manipulation during the test, especially where very long sample probe tubing is required as in the case of large diameter stacks.

(2) Where cooling of the gas stream is required, the auxiliary cooling apparatus required may be an added inconvenience due to its larger size and coolant media requirements. Such cooling may be required to protect the filter assembly against excessive temperature or to provide a cooled sample for special research investigations.

## B. LOW VOLUME SAMPLING TRAIN WITH EXTERIOR FILTER

In this type of train, the sample probe extends from the interior of the duct being sampled to an outside filter. The sample gas flow rates are usually in the range of ½ to 1½ CFM, using sample probe tubing of ¼ in. to 5/8 in. in diameter.

### Advantages

(1) Where the very high stack gas temperatures exceed the limits of the sample filter assembly (filter media, gaskets, machine threads, etc.) or where it is desired, in special investigations, to cool the sample gas, this can be accomplished easily in the train by the passage of the gas through the exterior sample tubing between the stack or duct and the sample filter assembly. Auxiliary cooling systems, if required, will be smaller in size and have lower coolant media requirements.

### Disadvantages

(1) The major disadvantage of this type of sampling train is that relatively appreciable quantities of the particulate matter in the sample gas are inevitably deposited in the sample probe tubing between the nozzle and the sample filter assembly, and these must be quantitatively recovered from the tubing and added to the material collected in the filter. There is an inherent error in this manipulation for sample recovery which is aggravated in those cases where long sample probe tubing is employed and where the particulate matter concentrations are low.

(2) The low ratio of sample flow rate to the wall area results in very rapid cooling, and if not prevented, may reduce gas temperature below the dewpoint and create corrosion of the tubing material (even stainless steel), plug the filter with condensed water, or create pseudo-particulate matter – e.g., sulfuric acid aerosol from sulfur trioxide or, possibly, sulfuric acid from the oxidation of sulfur dioxide within the sampling train due to the nature of the sample gas, the particulate matter, and the surface conditions to which the sample is exposed within the train.

(3) The potential problems listed above require the use of auxiliary facilities to heat the connecting tubing and devices for temperature control which can be quite cumbersome to handle and operate, particularly where long sample probe tubes are necessary.

Despite the disadvantages of low volume sampling trains with exterior filters, there are two test situations where their use can be justified.



Copyright ASME International
Provided by IHS under license with ASME
No reproduction or networking permitted without license from IHS
Not for Resale

One situtation is where the flue gas temperature is higher than can be tolerated by the filter assembly. In this case, the gas sample temperature is lowered to tolerable levels by exterior cooling prior to filtration.

In another situation, two filters would be used — one, an in-stack filter, and the other, an exterior filter, with facilities for accurately controlling the sample gas temperature between the two filters. This arrangement might be used in special studies to measure the presence of condensible vapors. The in-stack filter would yield data on concentrations of particulate matter actually in the flue gas and the exterior filter, always maintained at temperatures above the aqueous dewpoint, could collect liquids and solids formed by condensation in the sampling system between the two filters. This type of study is outside the scope of this Code.

## C. LOW VOLUME SAMPLING TRAIN WITH IN-STACK FILTER

This is the same assembly as that of category B above in respect to sample flow rates and the size of tubing — differing in that the filter holder, of compact dimensions, can be easily inserted through a sample port and be positioned inside the duct or stack during sampling — completely immersed in the main gas stream and maintained automatically at the gas stream temperature.

### Advantages

(1) Substantially all the particulate matter is deposited directly in the filter since there is scarcely any tubing between the point of entry of the sample gas stream and the filter proper.

(2) Because the filter is automatically maintained at the same temperature as the flue gas, no auxiliary apparatus is required for regulation of the temperature of the filter and sample probe tubing. This results in a smaller and lighter weight sampling train, unencumbered with a temperature control system which would require attention during the test.

### Disadvantages

This type of sampling train has fewer significant disadvantages than those of the other two types — and for this reason is the one favored in this Code.

(1) Sampling situations may be encountered where the gas temperature exceeds that which can be tolerated by the filter and filter holder, as alluded to previously.

(2) The in-stack filter would not yield data on the concentration of particulate matter formed as a result of cooling the flue or stack gases. This would actually be an advantage when it is desired to measure only the concentration of the particulate matter actually existing in the flue gas stream.

(3) Thermal expansion of the filter holder during high temperature sampling may create gas leakage problems if adequate precautions are not taken.

## D. SUMMARY AND CONCLUSIONS

(1) The detailed specification of one particular sampling train and the procedure for its use is not a guarantee of valid test results, and therefore is not an appropriate foundation for test codes — particularly for their use in connection with governmental regulations and commercial agreements. This has been demonstrated in numerous published experiences in the field of stack sampling.

(2) All types of sampling trains (high-volume and low-volume, with in-stack and/or exterior filters) should give the same test results if one copes successfully with the error-inducing hazards listed below in the approximate order of their relative importance.

(a) Overcome difficulties in sampling a large duct area, with the inherent tendency toward particulate matter stratification, by all techniques available to insure a representative sample.

(b) Maintain the temperature of the filter and the upstream sample probe tubing above the aqueous and acid dewpoints — using the appropriate instrumentation to verify the accomplishment of this objective. Simply heating the chamber enclosing the filter is not an acceptable means for accomplishing this.

(c) Insure quantitative recovery of all material deposited in the nozzle, probe, and tubing preceding the filter — avoiding potential losses (due to manipulative problems) or spurious material (due to corrosion, sulfate formation, or contamination). These problems are enhanced by long tubing and high dewpoints.

(d) Maintain an isokinetic sampling rate and an effective system for its monitoring.

(e) Obtain reliable measurement of total gas flow, especially in large area ducts and where there is a tendency toward maldistribution of velocities.

*Note:* Sampling train configurations, along with auxiliary apparatus for all of the types of trains discussed, are illustrated in Appendix C.



Copyright ASME International
Provided by IHS under license with ASME
No reproduction or networking permitted without license from IHS
Not for Resale

# APPENDIX B

## SAMPLING PROBES AND PARTICULATE MATTER COLLECTION APPARATUS

There are many different types of sampling probes and particulate matter collection apparatus available for use in the collection of gas-entrained particulate matter from a stack or duct. This Code provides guidance for the selection of the most appropriate sampling system components for use in any particular sampling situation.

On the following pages are illustrations of typical sampling probes and particulate matter collection devices which are commercially available. Further information regarding these sampling system components and their use can be obtained from the manufacturer.



Copyright ASME International
Provided by IHS under license with ASME
No reproduction or networking permitted without license from IHS

Not for Resale

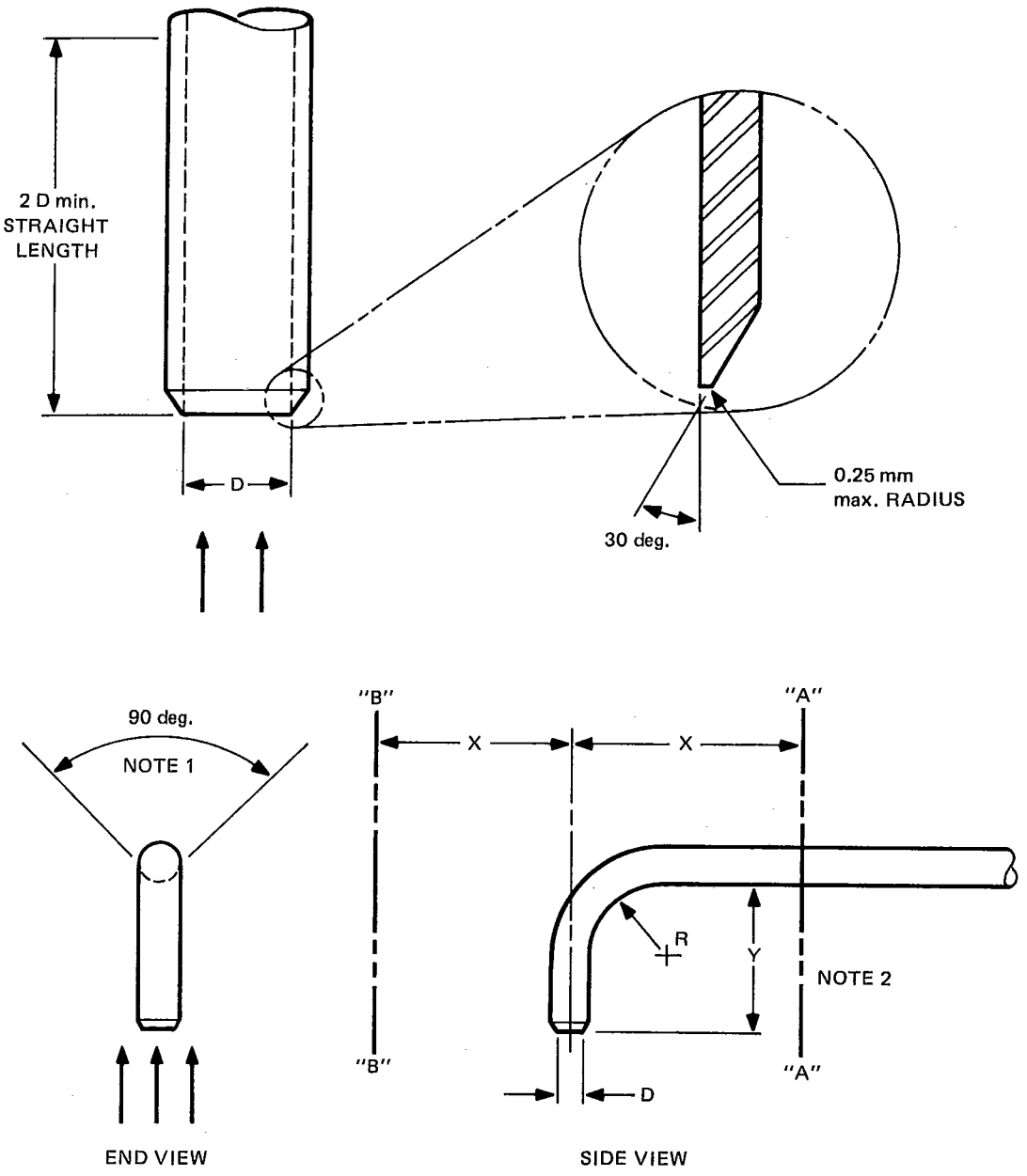


*Notes:* 1. The area upstream of this 90° sector shall be free of obstructions between planes A-A and B-B.

2. No portion of probe shall project upstream of nozzle entrance within a distance from nozzle centerline of 15 cm or 5 nozzle diameters, whichever is greater.

D = Nozzle Diameter
R = 2 X D (Minimum)
Y = 4 X D (Minimum)
X = 6 X D (Minimum)

FIG. B-1 RECOMMENDED DESIGN FOR SAMPLING NOZZLE TIP



Copyright ASME International
Provided by IHS under license with ASME
No reproduction or networking permitted without license from IHS
Not for Resale

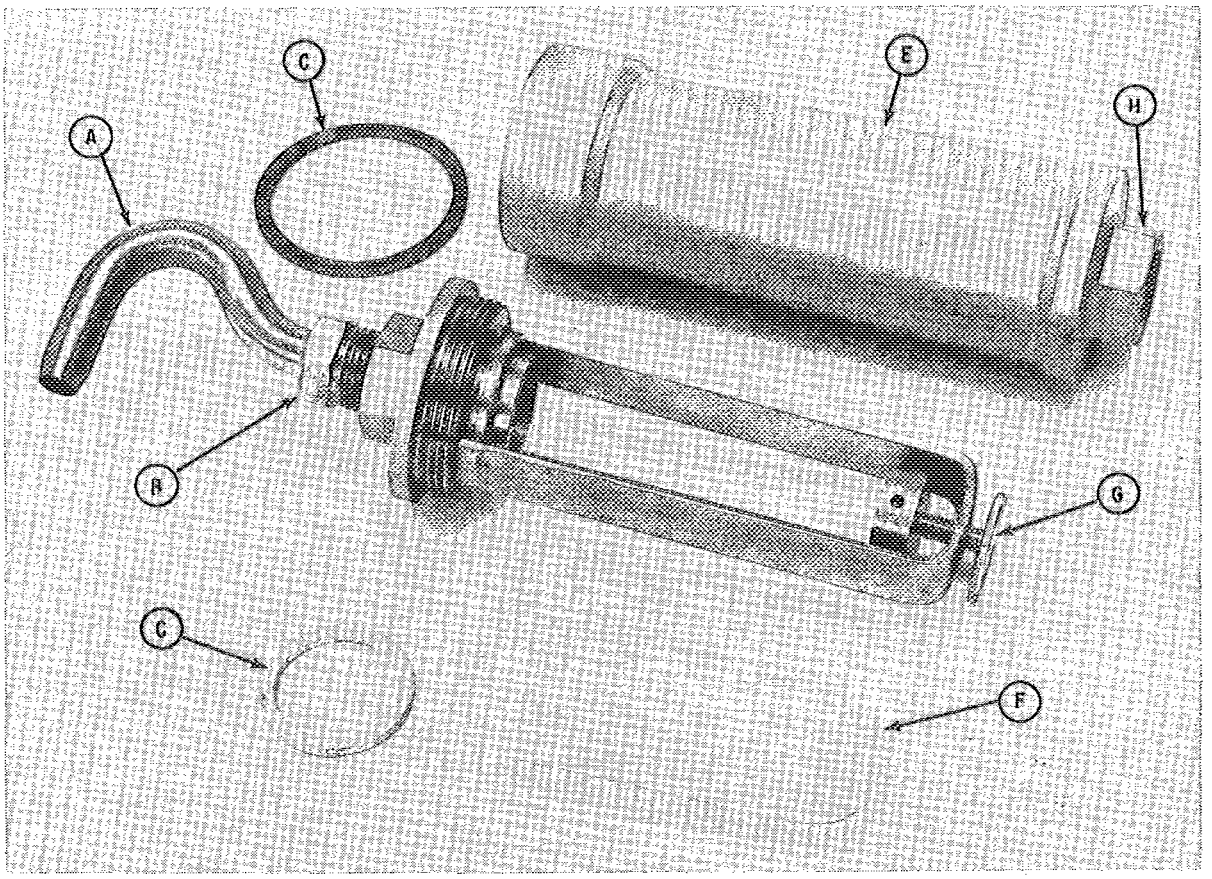


| Code | Part Identity and Function |
|---|---|
| | Complete Assembly, including Alundum Thimble |
| A | Probe Tips (1/4, 3/8, & 1/2" ID nozzles: 1 each) |
| B | Fitting (adapts nozzles to holder) |
| C | Asbestos Gaskets |
| D | Guide Ring |
| E | Housing |
| F | Alundum Thimble |
| G | Clamp |
| H | Adapter (adapts holder to probe) |

FIG. B-2 ALUNDUM THIMBLE PROBE



Copyright ASME International
Provided by IHS under license with ASME
No reproduction or networking permitted without license from IHS

Not for Resale

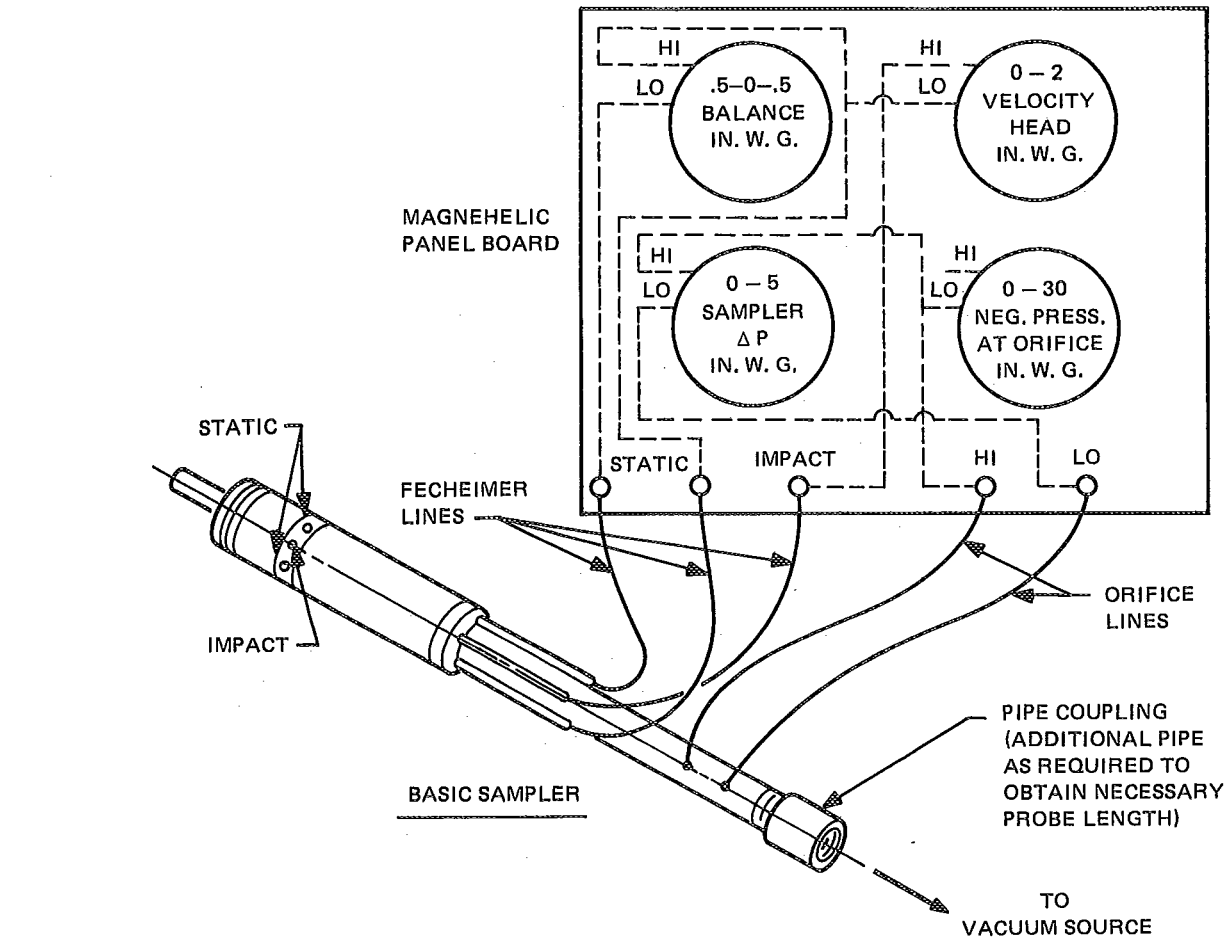


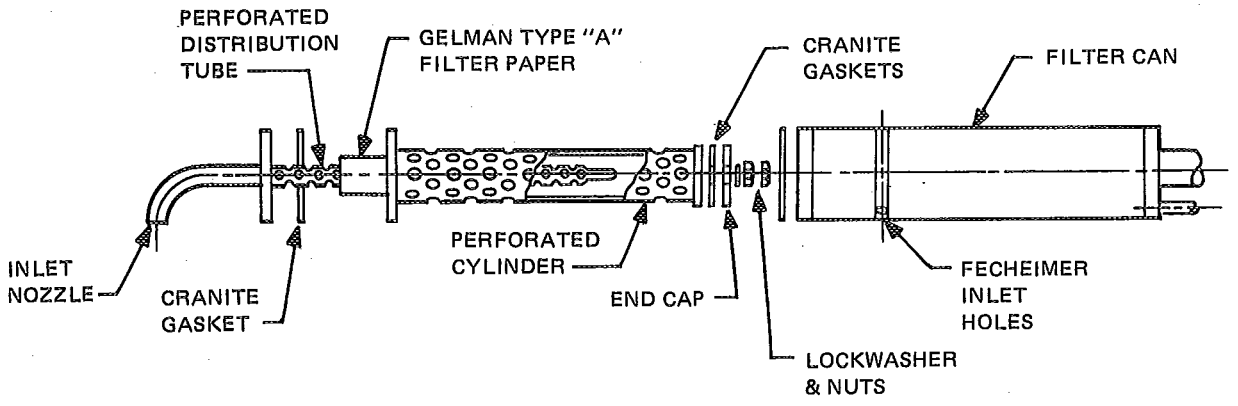


(ALTERNATE–END CAP WELDED TO PERFORATED CYLINDER)

FIG. B-3 IN-STACK FILTER ASSEMBLY USING PAPER FILTER MEDIA



Copyright ASME International
Provided by IHS under license with ASME
No reproduction or networking permitted without license from IHS

Not for Resale

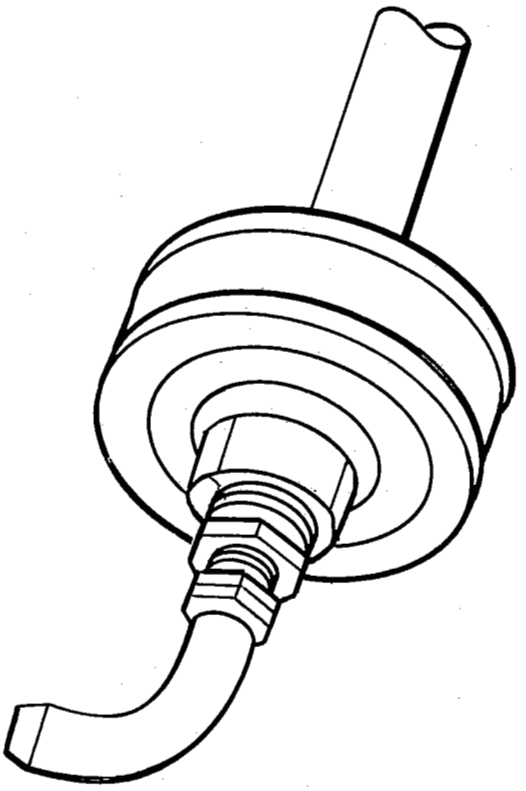

Suitable for use as In-Stack Primary Filter,
Back-up Filter, or Exterior Filter

**FIG. B-4 TYPICAL HOLDER FOR FLAT ROUND FILTERS**



Copyright ASME International
Provided by IHS under license with ASME
No reproduction or networking permitted without license from IHS

Not for Resale

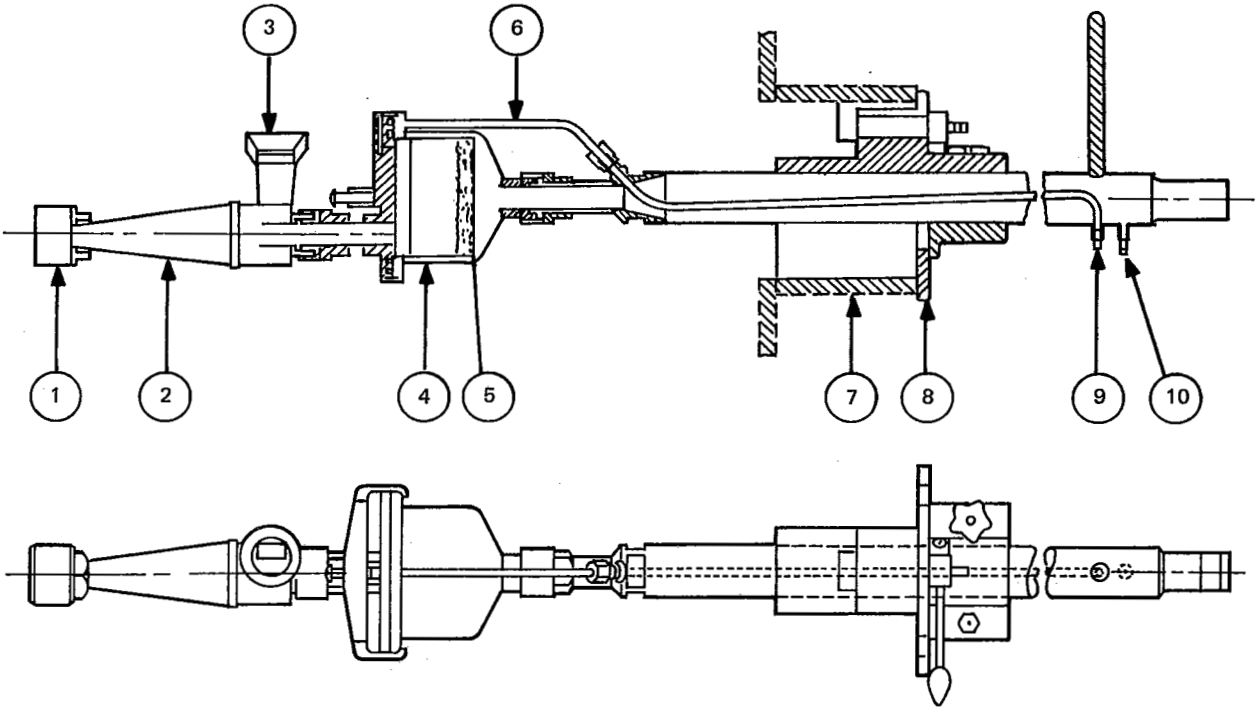


FIG. B-5a BCURA CYCLONE PROBE -- INTERNAL TYPE, INCLUDING FILTER

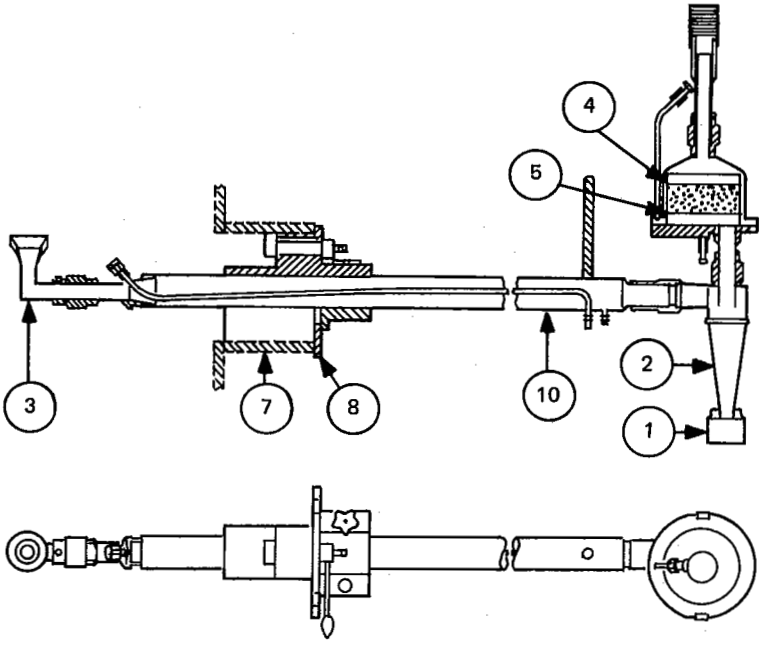


FIG. B-5b BCURA CYCLONE PROBE -- EXTERNAL TYPE, INCLUDING FILTER

**Key to Figs. B-5a and B-5b**

(1) Hopper for collecting large particles (2) Cyclone (3) Sampling nozzle (4) Filter housing (5) Filter, packed with glass wool, for collecting particulate matter (6) Filter by-pass pressure tube (7) 4-in. B.S.P. socket welded to wall of flue (8) Probe holder (9) Tapping for measuring cyclone pressure drop when filter is used (10) Tapping for cyclone pressure drop when filter is omitted

*Note:* See Reference [32] in Section 7.



Copyright ASME International
Provided by IHS under license with ASME
No reproduction or networking permitted without license from IHS

Not for Resale

# APPENDIX C

## PARTICULATE MATTER SAMPLING SYSTEMS

This Code provides guidance both for the selection of sampling system components and the manner in which they should be used in any particular sampling situation. Many different types of sampling systems are possible, depending upon the components selected and their arrangement to best provide valid sample data in as convenient a manner as possible.

The following pages contain illustrations of sampling system configurations recommended in this Code for various sampling applications. Also included are sampling system configurations which are not recommended but are acceptable in certain special test situations.



Copyright ASME International
Provided by IHS under license with ASME
No reproduction or networking permitted without license from IHS

Not for Resale

*Type 1.* (Low Volume)

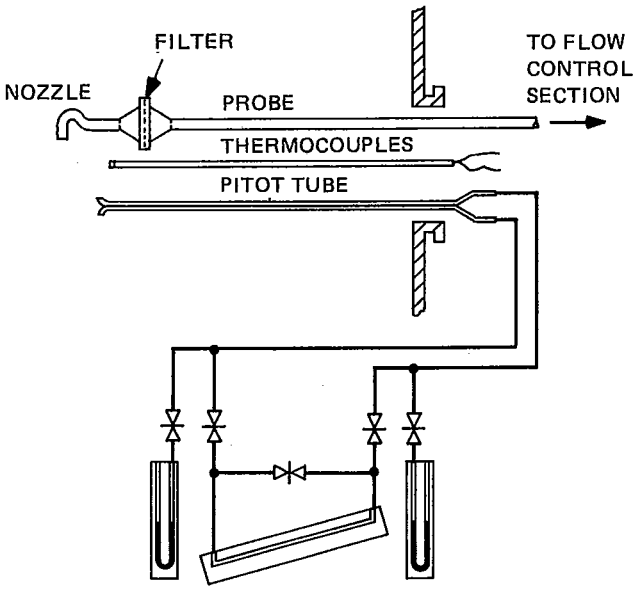


Recommended for general use — low particulate matter concentrations.

*Type 2.* (Low Volume)

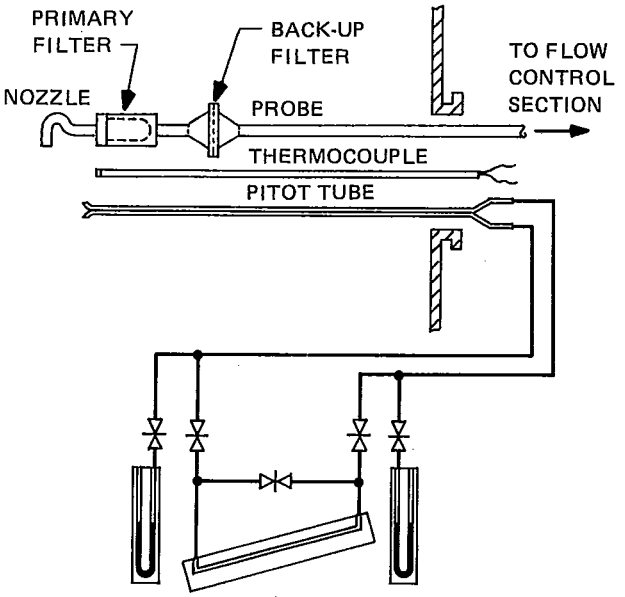


Recommended for general use — higher particulate matter concentrations.

*Type 3.* (Low or High Volume)

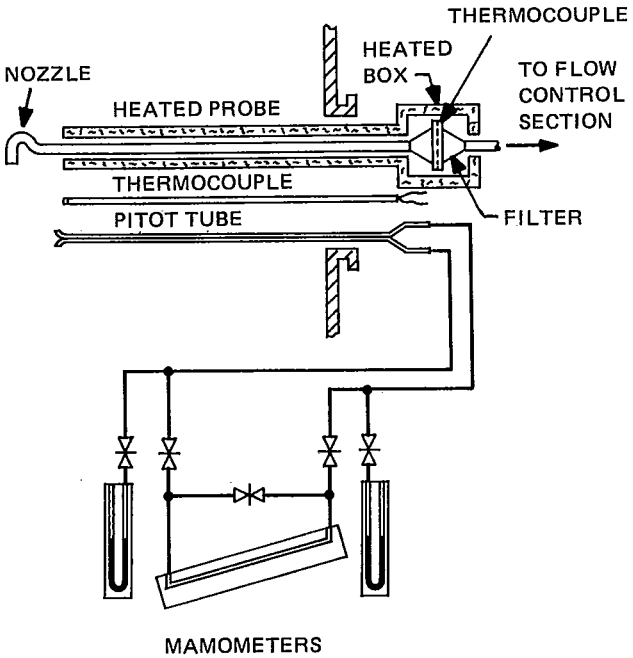


Recommended for use only when in-stack filters cannot be used due to high gas temperatures or other special considerations.

*Type 4.* (Low Volume)

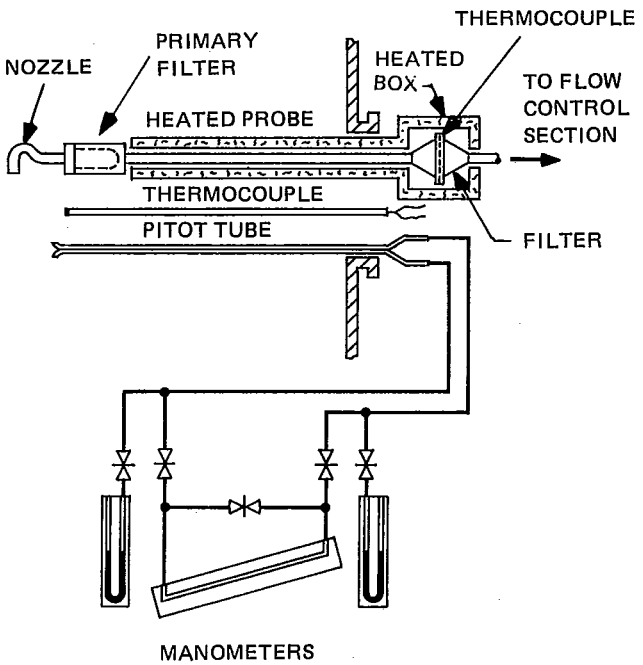


Acceptable for special cases (higher particulate matter concentrations) when an exterior heated filter is required. Type 1 in-stack filter may be used when particulate matter concentrations are low.

FIG. C-1 SAMPLE TRAIN CONFIGURATIONS — FILTRATION SECTION



Copyright ASME International
Provided by IHS under license with ASME
No reproduction or networking permitted without license from IHS

Not for Resale

## Notes to Fig. C-1

1. In all of the above drawings "S"-Type (Stauscheibe) Pitot tubes are shown. However, Standard-Type Pitot tubes may be used instead. In either case, proper calibration is required as specified in this Code.

2. Pitot tubes are shown as integral parts of the Sample Train as continuous monitoring of gas velocity at the sampling point is usually required. If it can be established that the gas velocity at each sampling point does not vary by more than ±10% during a test run and that point-to-point velocity gradients are not great, gas velocity data may be obtained by detached Pitot tube traverses made both before and after the run. However, this can be done only by agreement of all parties concerned.

3. The Type 3 configuration, when used for high volume sampling, may not require heaters for the probe and for the external filter assembly if sample gas temperature can be maintained above the dewpoint temperature through the filter.



Copyright ASME International
Provided by IHS under license with ASME
No reproduction or networking permitted without license from IHS

Not for Resale

*Alternate A*

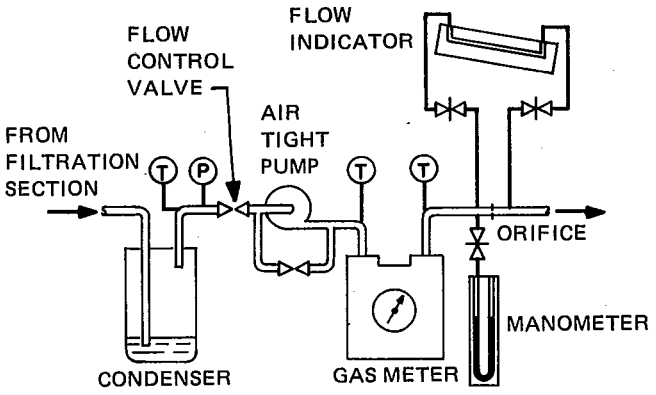


Gas Meter located after Pump

*Alternate B*

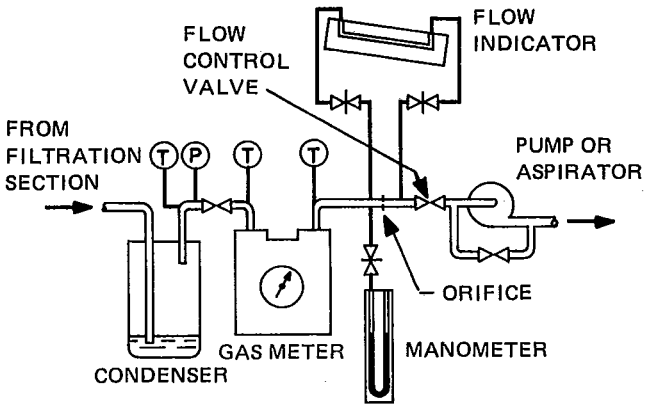


Gas Meter located before Pump

*Alternate C*

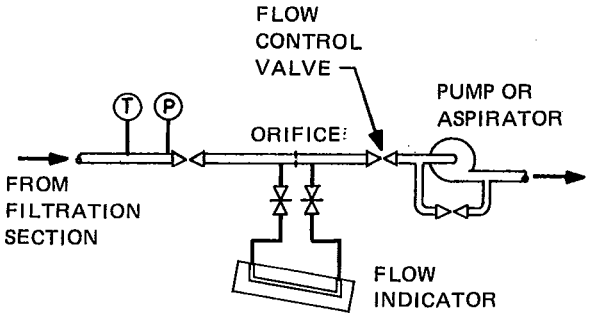


No Condenser and no Gas Meter

**FIG. C-2 SAMPLE TRAIN CONFIGURATIONS – FLOW CONTROL SECTION**



Copyright ASME International
Provided by IHS under license with ASME
No reproduction or networking permitted without license from IHS

Not for Resale

**RECOMMENDED USE OF SAMPLING TRAINS FOR BASIC PROCESSES AND VARIOUS GAS CONDITIONS**
**Sampling of Particulate Matter Emissions**

| Sampling Train No. | PROCESS | | | | | | | | | | | | | |
|---|---|---|---|---|---|---|---|---|---|---|---|---|---|---|
| | Fossil Fuel | | | Cement | | | Iron & Steel | | | | | Incineration | | Other |
| | Pulv. Coal | Stoker Coal | Oil | Wet Process | Dry Process | Coolers | BOF | Open Hearth | Sinter | Blast Furnace | Scarf. | Under 800°F | Over 800°F | |
| 1. | X | X | X | X | X | X | X | X | X | X | X | X | – | Relate to Gas Conditions Below |
| 2. | X | X | – | X | X | X | – | X | X | X | X | X | – | |
| 3. | (1) | – | – | – | – | (1) | (1) | (1) | (1) | (1) | (1) | (1) | X | |

Note: (1) Train No. 3 can be used when wet scrubbers exist.

| Sampling Train No. | SPECIFIC GAS CONDITIONS | | | | | | | | | | |
|---|---|---|---|---|---|---|---|---|---|---|---|
| | Column 1 | Column 2 | Column 3 | Column 4 | Column 5 | Column 6 | Column 7 | Column 8 | Column 9 | Column 10 | |
| | < 200°F < 5% $H_2O$ < 100 mg | 200°F to 500°F < 10% $H_2O$ < 100 mg | 200°F to 500°F > 10% $H_2O$ < 100 mg | 400°F to 800°F 15-35% $H_2O$ < 100 mg | 500°F to 800°F 5-35% $H_2O$ > 100 mg | Over 800°F | Saturated Moist Conditions | Very Low Ambient Temperature | | | |
| 1. | X | X | X | X | | | | | | | |
| 2. | | | X | X | X | | | | | | |
| 3. | | | | | | X | X | X | | | |

The Sampling Train Nos. indicated above refer to the "Sample Train Configurations — Filtration Section" shown in Fig. C-1.

**FIG. C-3 SAMPLE TRAIN CONFIGURATIONS — SELECTION GUIDE**





Copyright ASME International
Provided by IHS under license with ASME
No reproduction or networking permitted without license from IHS
Not for Resale

# APPENDIX D

## FILTRATION EFFICIENCY OF FILTERS FOR FINE PARTICULATE MATTER

In the absence of specific knowledge about the filtration efficiency of any particular filter medium it is tempting to draw inferences from data culled from the literature of fine particle technology. In reviewing such data it is important to restrict one's observations to those data that are based on weight determinations and weight efficiency of the filter media tested.

Two test methods, other than those based on weight, are common in the literature of fine particle technology, and they bear no relation to each other. These are the 0.3 micron DOP particle cloud method, evaluated by light scattering, and the dust spot method, evaluated by light transmission measurements.

### Dust Spot

A great deal of the data on dust spot efficiencies appears in the literature dealing with air cleaning performance and "high efficiency" ventilation air cleaning equipment, i.e., some filters and especially two stage electric precipitators (Penney type, not Cottrell). Air cleaning efficiency of these devices is rated on the basis of "dust spot" measurements. This refers to the use of ambient air with its normal complement of fine particulate matter as the test stream. Samples of air entering the precipitator and from the cleaned air stream are simultaneously drawn through equal size circular areas of white filter paper at metered rates for a measured period of time. The opacities of resulting dark spots on the filter paper are measured by light transmission, the optical densities calculated and the two values compared.

The quantities of particulate matter represented by the optical density consist overwhelmingly of the particles smaller than 1-2 microns because these are the ones having the greatest opacity effect. The few largest particles exert a negligible effect on the opacity although they account dominantly for the weight of the mixture.

### DOP

During the years since 1949, an immensely useful technique has been available and widely used in laboratory research, the generation of monodisperse clouds of dioctyl phthalate (DOP) aerosol and light scattering instrumentation for measurement of their concentration. They are characterized by a unique and uniform particle size, commonly 0.3 micron (0.25 to 0.35 microns) and in that respect are in marked contrast to industrial and other dust or aerosol clouds which are always composed of widely heterogeneous particle sizes.

### Filtration Efficiency of Various Filter Media

Measurements of filter or precipitator performance using DOP aerosols do not represent, even approximately, the filtration efficiency of filters described on a *mass* basis, mainly because the *mass* fraction of 0.3 micron particles in industrial particle clouds is insignificantly small; they are overwhelmed by the presence of larger particles, including flocculated clusters of smaller particles which behave like larger particles.

In both of these two methods the fine particle fraction dominates the measurement whereas the large particle fraction dominates weight measurements. The different filtration efficiencies are illustrated in the following table, which shows filtering characteristics of several ventilation air filters. It is adapted from a tabulation in the ASHRAE Guide & Data Book, chapter on "Air Cleaners" (numbering varies annually). (See Reference [26].)

**Table D-1 Filtration Efficiency of Various Filter Media**

Efficiency rating of air filtering media depends on the test method employed, illustrated by the performance data below on several filters used in ventilation-air cleaning.

| | Filtration efficiency based on | | |
|---|---|---|---|
| | Mass | Dust Spot | 0.3 micron DOP |
| Thin paper-like sheets (glass or cellulose fibers) | 80-90% | 20-35% | 0.0% |
| Mats of 5-10 micron fibers, ¼-½ in. thick | 90-95 | 40-60 | 15-25 |
| Mats of 3-5 micron fibers, ¼-¾ in. thick | 95 | 60-80 | 35-40 |
| Mats of ½-2 micron glass fibers | NA* | 90-98 | 75-90 |

*"Not Applicable." Close to 100%, therefore weight efficiency basis is impractical.



Copyright ASME International
Provided by IHS under license with ASME
No reproduction or networking permitted without license from IHS
Not for Resale

As emphasized elsewhere in this Code, other characteristics of the filter media must also be considered in the selection of the filter to be used in a particular test situation. As well as possessing adequate filtration efficiency, the filter must also be unaffected (chemically and physically) by the gas being sampled at the temperatures to be encountered. Furthermore, it must be inert in respect to its effect on the materials being filtered.

Filters are obtainable from a large number of vendors – in a wide range of materials and configurations. The full specifications of all filters (filter media and filter holder) should be studied carefully in the technical literature available from the vendors to insure suitability for purposes intended. The selection of the filter to be used should be a matter for mutual agreement of all parties to the test.



Copyright ASME International
Provided by IHS under license with ASME
No reproduction or networking permitted without license from IHS

Not for Resale

# APPENDIX E

## SAMPLING IN LOW VELOCITY GAS STREAMS

Sometimes duct arrangements may be encountered where the logical cross section for measurement of particulate matter concentrations is in streams where velocities are too low to be measured by recommended instruments — for example, discharge from a scrubber immediately into a low velocity tower or filtered gas discharge from a pressure-type bag filter dust collector without a stack.

The best remedy in such a situation would be the addition of a duct through which gas would be channeled at measurable velocities. Such additional flues need not necessarily accomodate the total gas flow.

Where this procedure is impractical, the total gas flow may be determined at another section of the system where the velocities are high enough to be measured; and from this determination of total gas flow and the cross-sectional area in the low velocity section, one calculates the average velocity over the total low velocity flow area.

Sampling in the low velocity flow area is then conducted at a constant flow rate determined by the calculated average velocity obtained while traversing the area at the required number of points defined according to the conventional procedures.

The consequences of this sampling procedure, as to potential error, result from the fact that at some points, sampling will be lower and at other points will be greater, than isokinetic rates. If the variation in velocity is judged not excessive, the resulting average concentration may be acceptably accurate, especially where the particulate matter is free of large particles.



Copyright ASME International
Provided by IHS under license with ASME
No reproduction or networking permitted without license from IHS

Not for Resale

# APPENDIX F

## PARTICULATE MATTER COLLECTION AND THE EFFECT OF CONDENSED $SO_3$

The greater part of the sulfur released from fuel during combustion processes appears in the product of combustion as $SO_2$ which passes unaffected as a gas through particulate sampling equipment. However, a small percentage is oxidized to $SO_3$ which in cooler flue gas, reacts with vapor phase water to form sulfuric acid.

If the gas temperature in the sampling probe falls below the dew point, the sulfuric acid may condense and increase the quantity of particulate matter collected. This increase may occur by reaction of the sulfuric acid with fly ash particles or with the sampling equipment to form additional solid compounds or by condensation followed by agglomeration of fly ash particles.

It follows that by maintaining the metal and gas temperatures of the sampling equipment above the acid dew point the above problems will be eliminated thus avoiding a positive error in the determination of particulate matter loadings.

Acid dew point is defined as the temperature at which the combustion gases are saturated with sulfuric acid and the dew point to sulfuric acid concentration relationship was determined using the condensation sampling method. In a special laboratory apparatus (Fig. F-1) known quantities of sulfuric acid were added to both air and flue gas streams and then collected in a specially designed condenser maintained at a temperature between the acid dew point and the water dew point. Sulfuric acid was thus condensed while all other flue-gas constituents remained in the flue gas (see Table F-1).

The agreement of dew point determination of this type with thermodynamically calculated data is shown in Fig. F-2.

TABLE F-1 EXPERIMENTAL RESULTS – AIR VS. SYNTHETIC FLUE GAS

| Gas Composition | Volume, Liters | $H_2SO_4$, Added | ppm Recovered | Difference |
|---|---|---|---|---|
| Air | 56.1 | 30.2 | 30.5 | + 0.3 |
| Air | 55.7 | 24.6 | 24.2 | - 0.4 |
| Air | 55.7 | 26.9 | 26.7 | - 0.2 |
| Air | 55.9 | 24.1 | 23.3 | - 0.8 |
| Air | 55.9 | 28.2 | 27.6 | - 0.6 |
| Air | 55.9 | 10.7 | 10.7 | - 0.0 |
| | | | Avg. Diff. | - 0.3 |
| Sfg (1) | 56.1 | 28.7 | 28.5 | - 0.2 |
| Sfg (1) | 55.7 | 29.4 | 28.9 | - 0.5 |
| Sfg (1) | 55.9 | 29.1 | 28.5 | - 0.6 |
| Sfg (1) | 55.9 | 28.2 | 28.3 | + 0.1 |
| Sfg (1) | 55.7 | 27.6 | 27.2 | - 0.4 |
| Sfg (2) | 55.7 | 27.7 | 27.4 | - 0.3 |
| Sfg (3) | 55.7 | 28.6 | 28.2 | - 0.4 |
| Sfg (2) | 55.9 | 10.5 | 10.3 | - 0.2 |
| | | | Avg. Diff. | - 0.3 |

(1) Synthetic flue gas containing approximately 2000 ppm sulfur dioxide.
(2) Synthetic flue gas containing approximately 750 ppm sulfur dioxide.
(3) Synthetic flue gas containing approximately 150 ppm sulfur dioxide.

*Note:* See References [18] through [24] in Section 7.



Copyright ASME International
Provided by IHS under license with ASME
No reproduction or networking permitted without license from IHS
Not for Resale

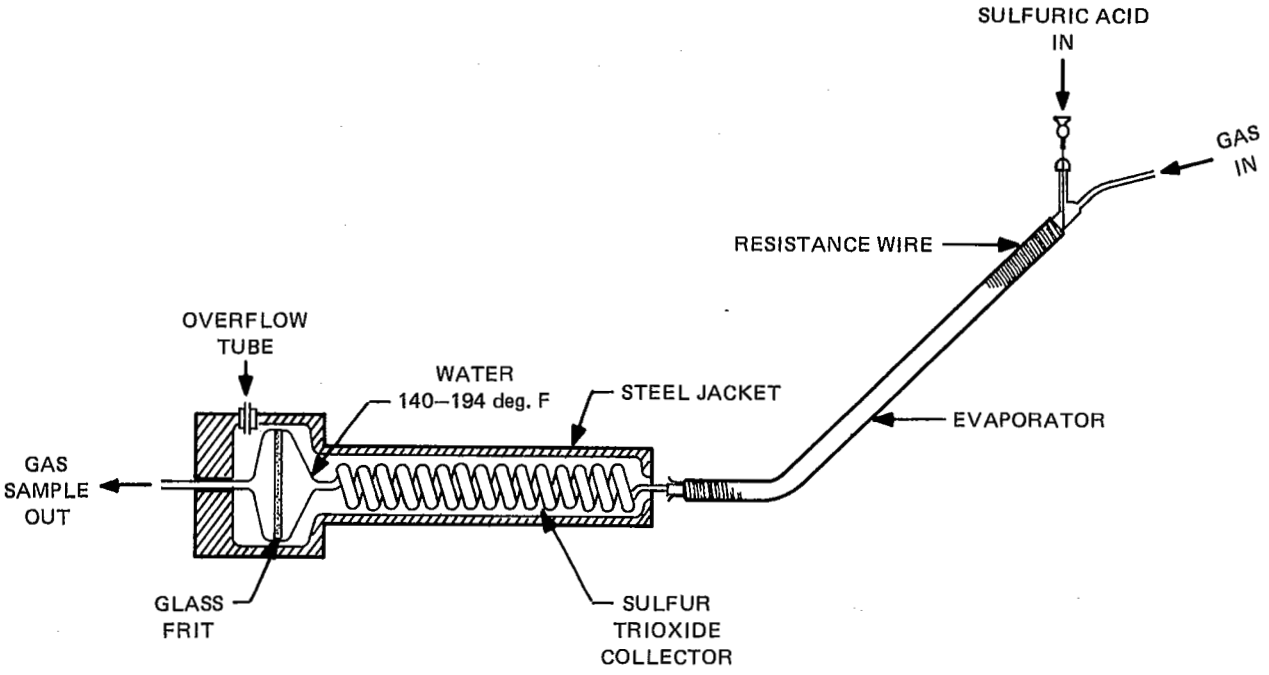


FIG. F-1 CALIBRATING APPARATUS FOR SULFUR TRIOXIDE COLLECTOR

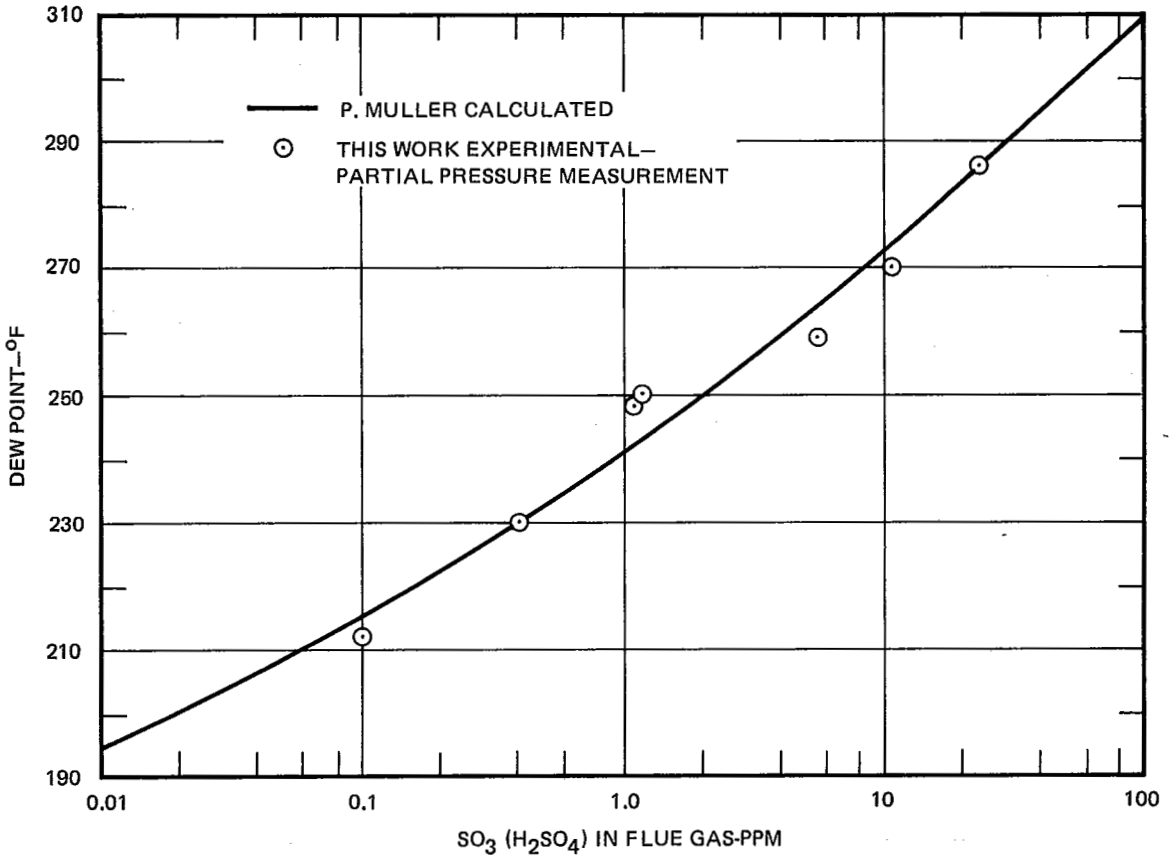


FIG. F-2 DEW POINT AS A FUNCTION OF $H_2SO_4$ CONCENTRATION



Copyright ASME International
Provided by IHS under license with ASME
No reproduction or networking permitted without license from IHS

Not for Resale

# APPENDIX G

## TYPICAL GAS VELOCITY AND PARTICULATE MATTER CONCENTRATION PROFILES

As indicated in this Code, gas velocity and particulate matter concentration can vary greatly between various points in a cross section of a duct. This situation is greatly aggravated by bends and restrictions in the gas flow path. Unfortunately, this situation occurs frequently in field tests of actual equipment.

Two sets of diagrams are included here to illustrate this situation.

The first set illustrates the nature and magnitude of the variation of gas flow velocity and the rate of transport of particulate matter (product of gas flow rate and particulate matter concentration) at various points in cross sections of typical duct and stack configurations.

The second set shows gas velocity distribution profiles obtained during actual field tests on large steam generating units. Total gas flow rates, computed by three different procedures, are shown for each example. The procedures used were:

(a) Conventional gas flow rate calculation procedure using Pitot tube gas velocity data applied to "equal areas" for each test point.

(b) Stoichiometric gas flow rate calculation, based upon chemical analyses of the fuel burned and of the gases in the duct passing the test points.

(c) Modified gas flow rate calculation procedure using Pitot tube gas velocity data. In this procedure, isobaric lines were drawn on a cross section diagram of the duct – their locations determined from Pitot tube data which had previously been plotted thereon. Total gas flow rates were then calculated by summing up the products of the areas between the isobars and the estimated average gas velocity in each such area – the size of the areas determined by means of a planimeter measurement of each of the cross section drawings.

The differences between the gas flow rates, as calculated by these three procedures, illustrate the inherent difficulty of obtaining accurate gas flow rate test data from Pitot tube velocity traverses under the frequently prevailing adverse flow conditions prevailing in typical flue gas ducts.



Copyright ASME International
Provided by IHS under license with ASME
No reproduction or networking permitted without license from IHS
Not for Resale

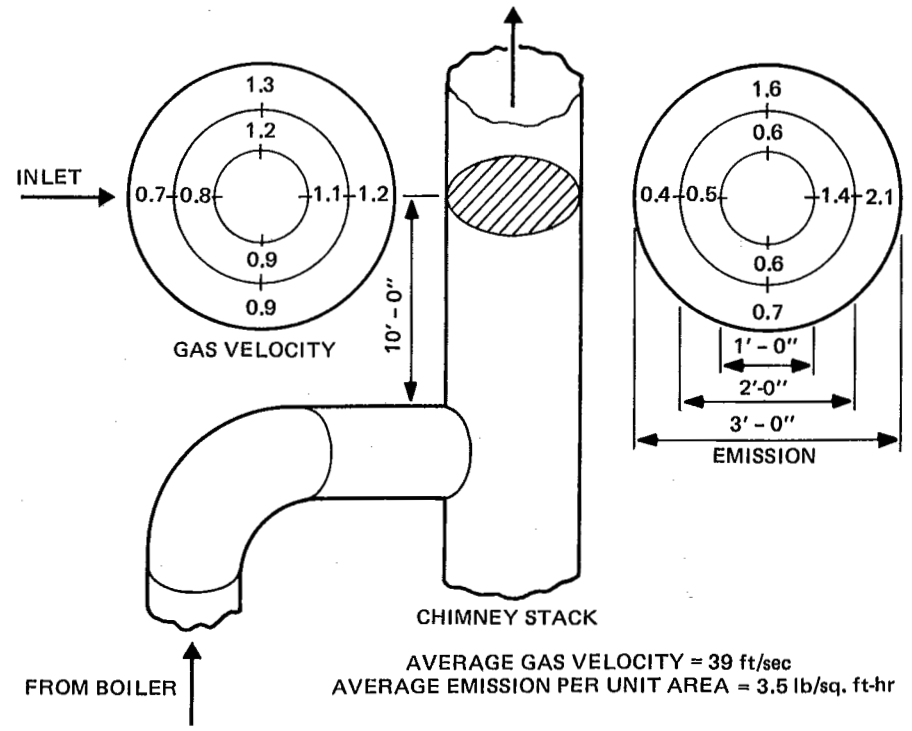


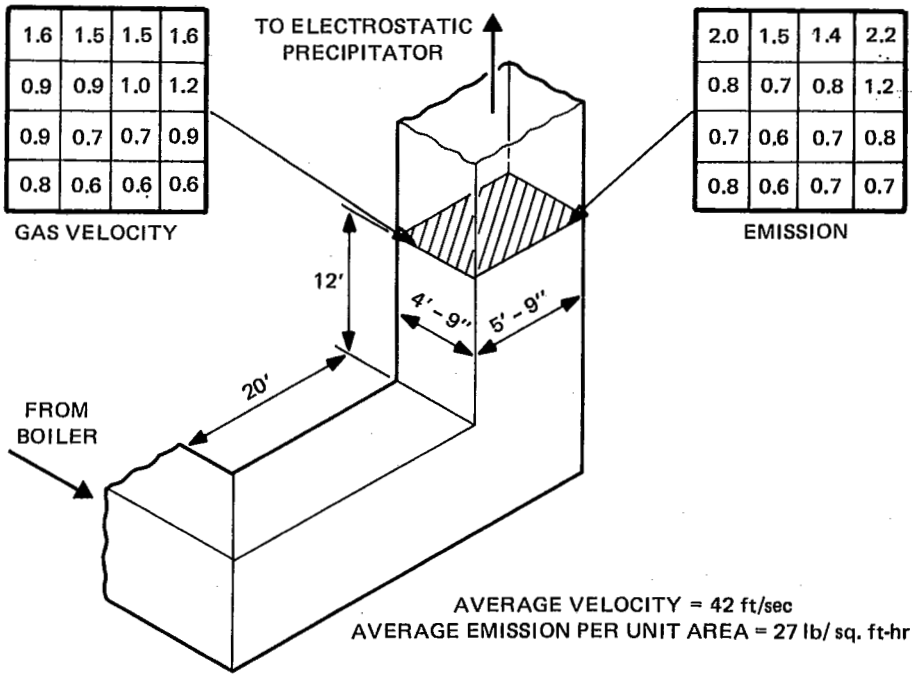


**FIG. G-1 GAS FLOW VELOCITY AND THE RATE OF TRANSPORT OF PARTICULATE MATTER**



Copyright ASME International
Provided by IHS under license with ASME
No reproduction or networking permitted without license from IHS

Not for Resale

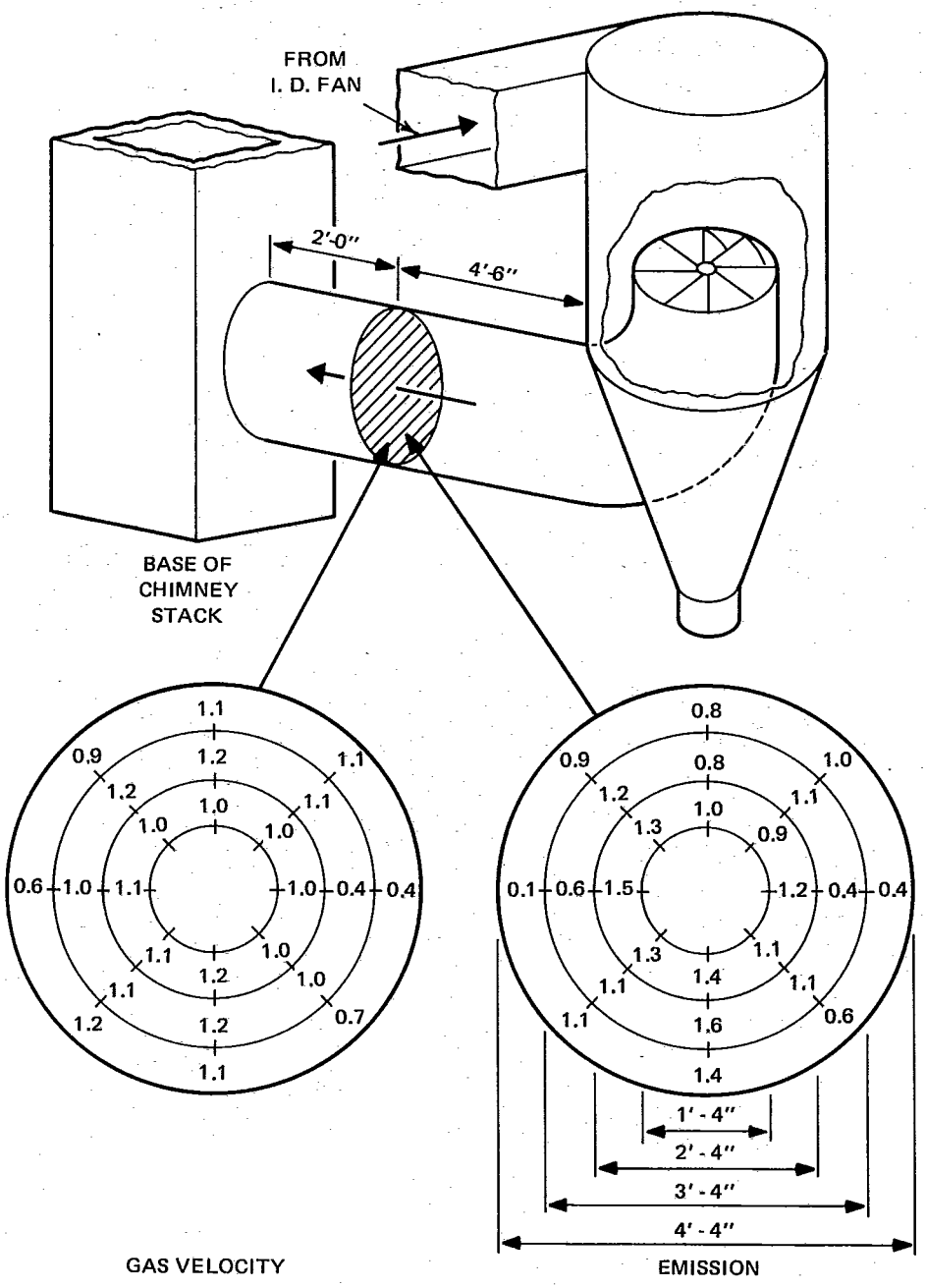


(LOOKING UPSTREAM)

AVERAGE GAS VELOCITY = 43 ft sec
AVERAGE EMISSION PER UNIT AREA = 3.0 lb/sq. ft-hr

FIG. G-1 (Cont'd)



Copyright ASME International
Provided by IHS under license with ASME
No reproduction or networking permitted without license from IHS
Not for Resale

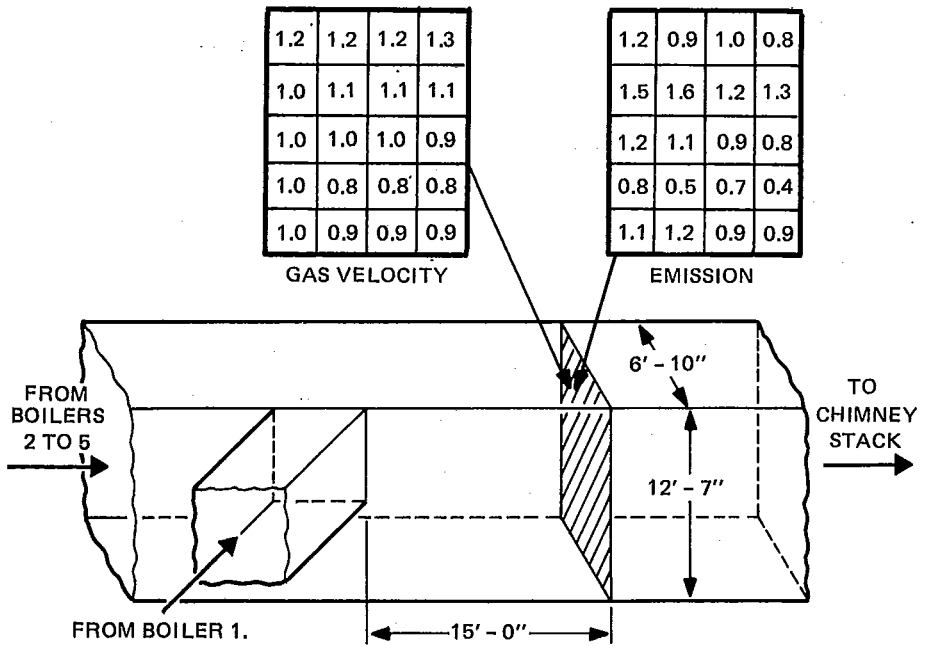


AVERAGE GAS VELOCITY = 33 ft/sec
AVERAGE EMISSION PER UNIT AREA = 1.3 lb/sq. ft-hr

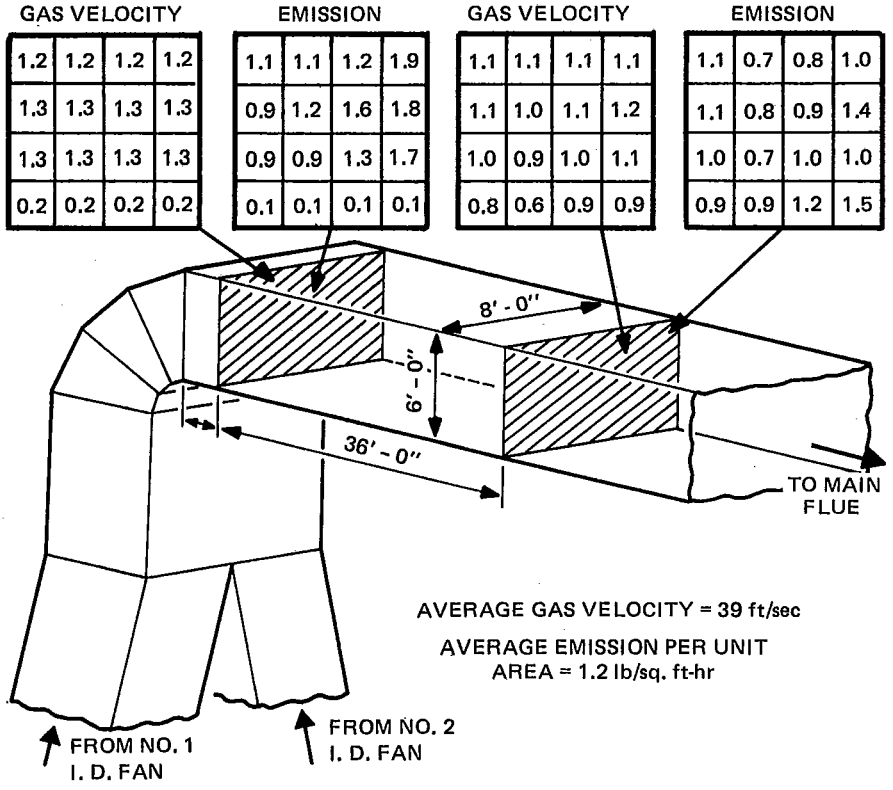


AVERAGE GAS VELOCITY = 39 ft/sec
AVERAGE EMISSION PER UNIT AREA = 1.2 lb/sq. ft-hr

FIG. G-1 (Cont'd)



Copyright ASME International
Provided by IHS under license with ASME
No reproduction or networking permitted without license from IHS

Not for Resale

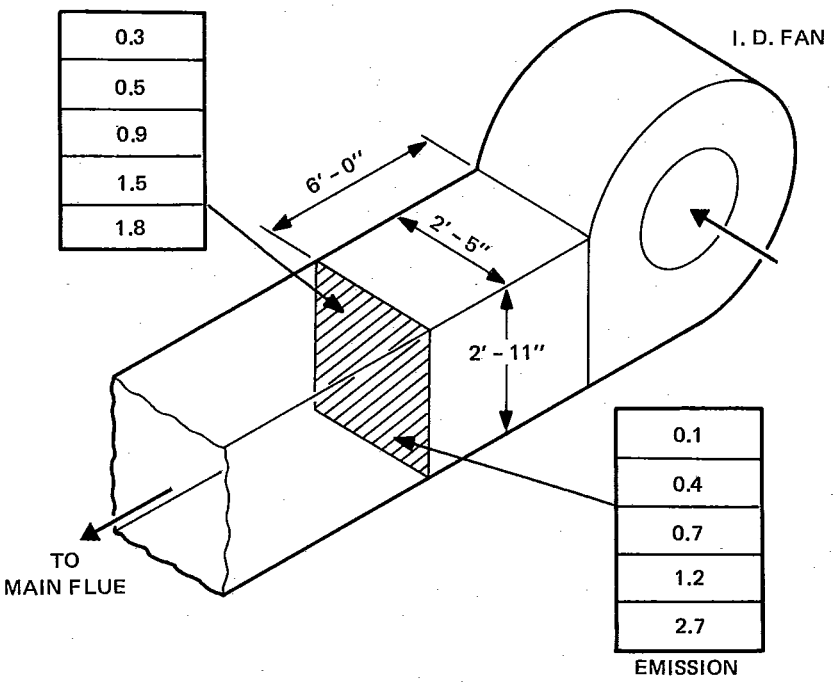


AVERAGE GAS VELOCITY = 110 ft/sec
AVERAGE EMISSION PER UNIT AREA = 18.3 lb/sq.ft-hr

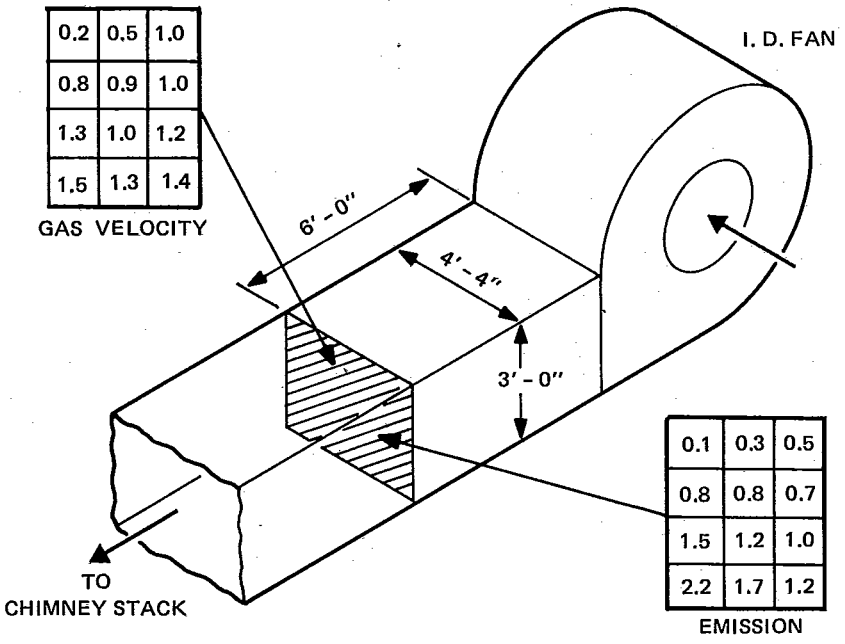


AVERAGE GAS VELOCITY = 43 ft/sec
AVERAGE EMISSION PER UNIT AREA = 3.0 lb/sq. ft-hr

FIG. G-2



Copyright ASME International
Provided by IHS under license with ASME
No reproduction or networking permitted without license from IHS
Not for Resale

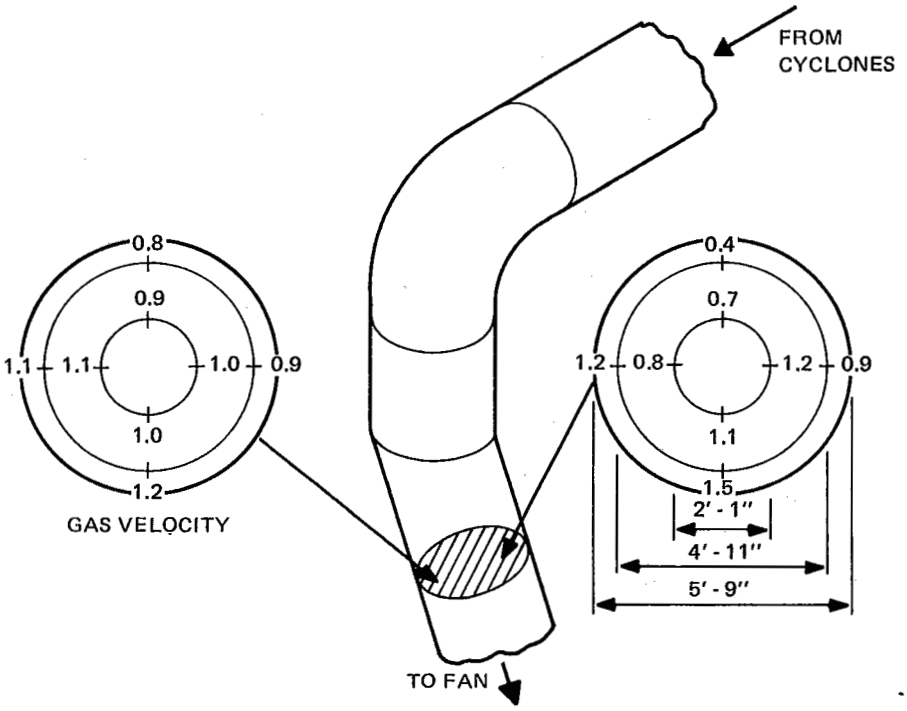


AVERAGE GAS VELOCITY = 45 ft./sec
AVERAGE EMISSION PER UNIT AREA = 4.6 lb/sq. ft-hr

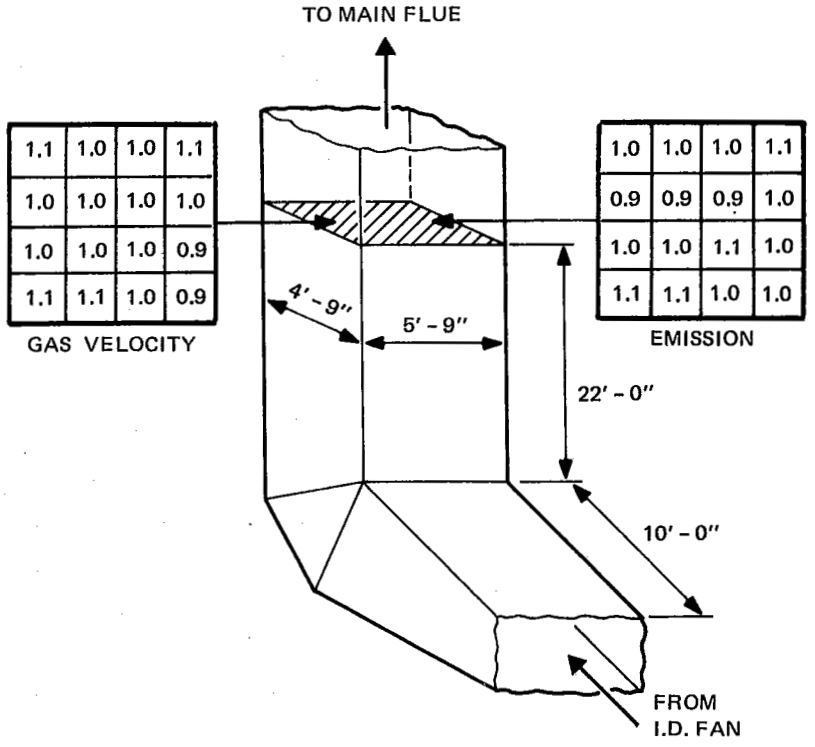


AVERAGE GAS VELOCITY = 52 ft/sec
AVERAGE EMISSION PER UNIT AREA = 2.2 lb/sq. ft-hr

**FIG. G-2 (Cont'd)**



Copyright ASME International
Provided by IHS under license with ASME
No reproduction or networking permitted without license from IHS

Not for Resale

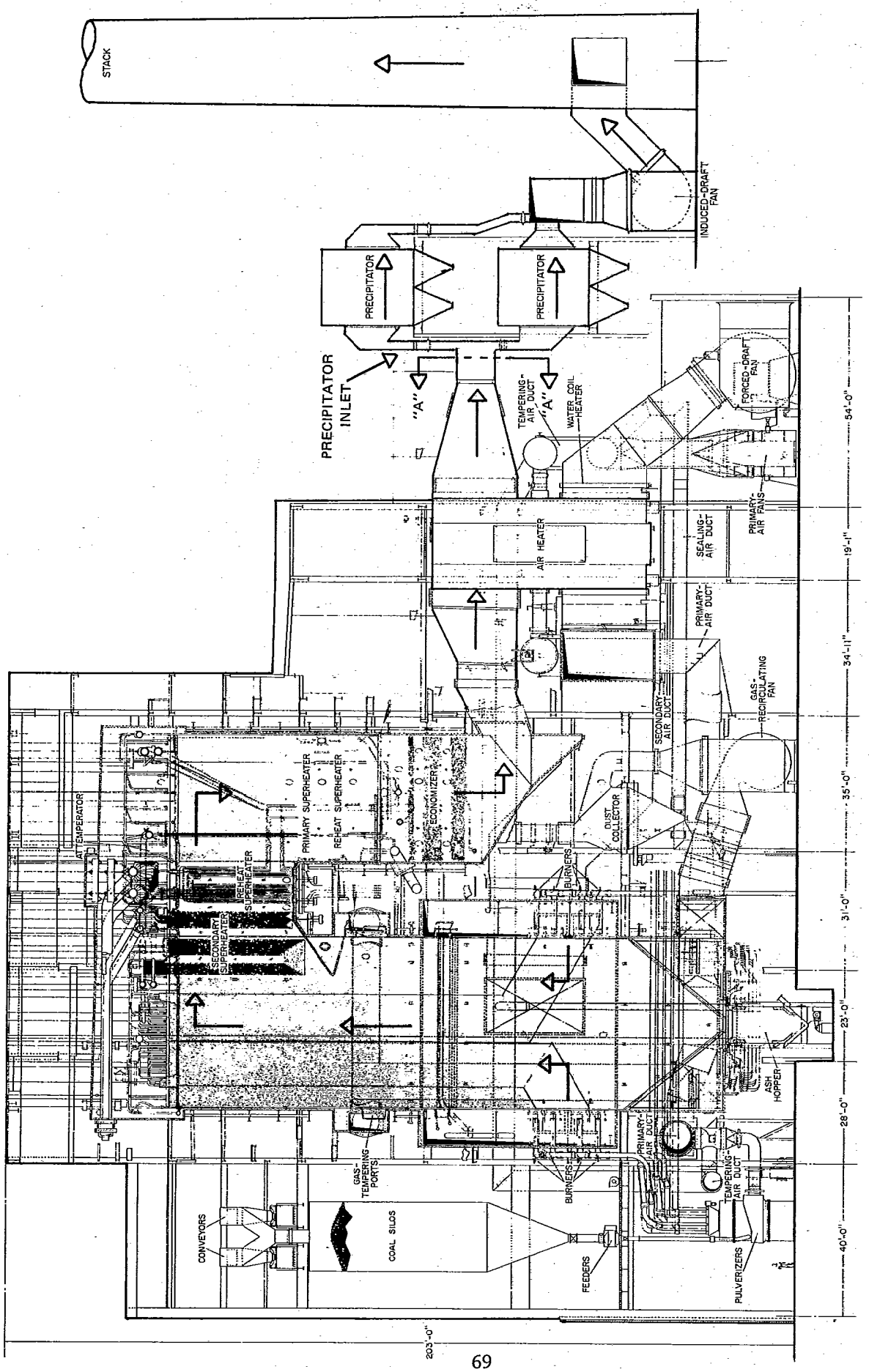


FIG. G-3 GAS VELOCITY DISTRIBUTION PROFILES UNDER ACTUAL TEST CONDITIONS



Not for Resale
Copyright ASME International
Provided by IHS under license with ASME
No reproduction or networking permitted without license from IHS

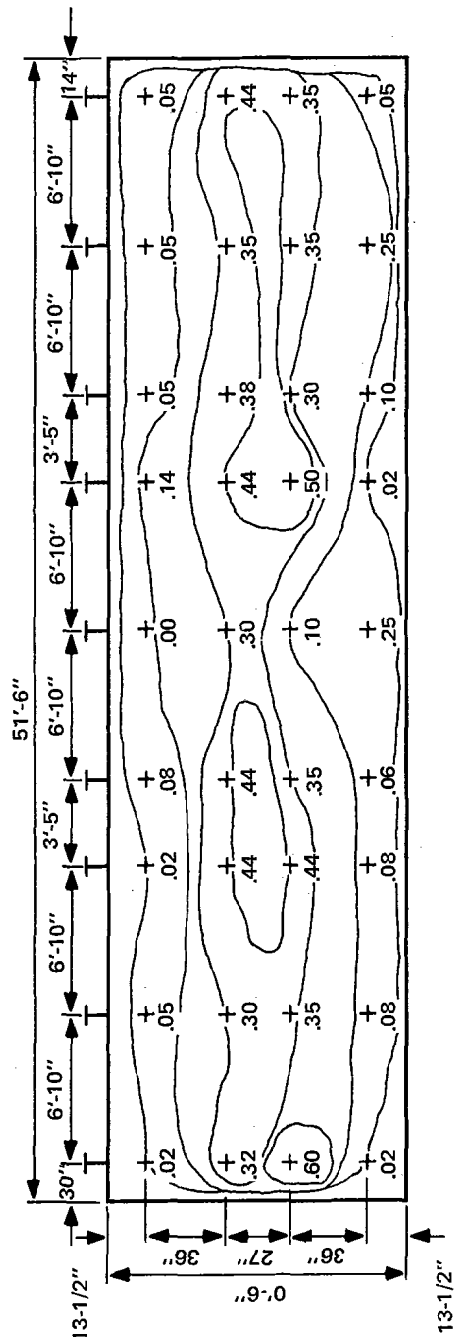


North Precipitator Inlet

| | |
|---|---|
| ACFM by velocity head | 1,119,353 |
| ACFM from fuel and gas analysis | 1,078,256 |
| ACFM by velocity head (area weighted) | 1,064,513 |

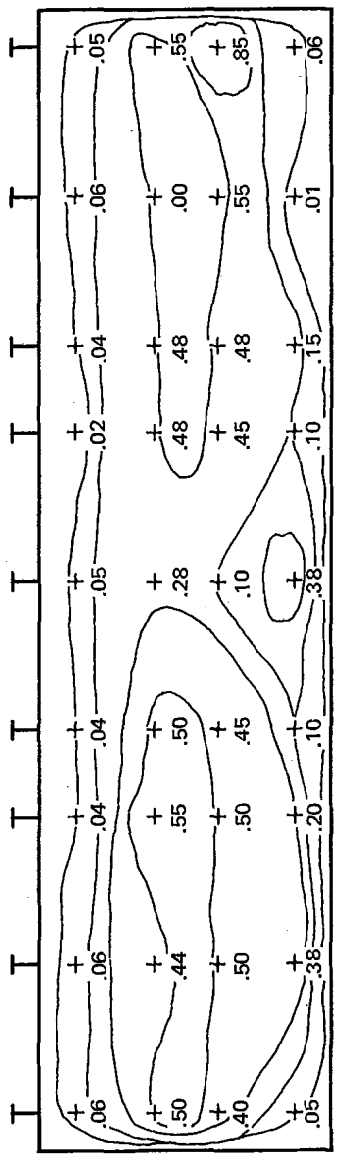

SECTION A-A

South Precipitator Inlet

| | |
|---|---|
| ACFM by velocity head | 1,204,250 |
| ACFM from fuel and gas analysis | 1,072,307 |
| ACFM by velocity head (area weighted) | 1,104,925 |

FIG. G-3 (Cont'd)



Copyright ASME International
Provided by IHS under license with ASME
No reproduction or networking permitted without license from IHS
Not for Resale

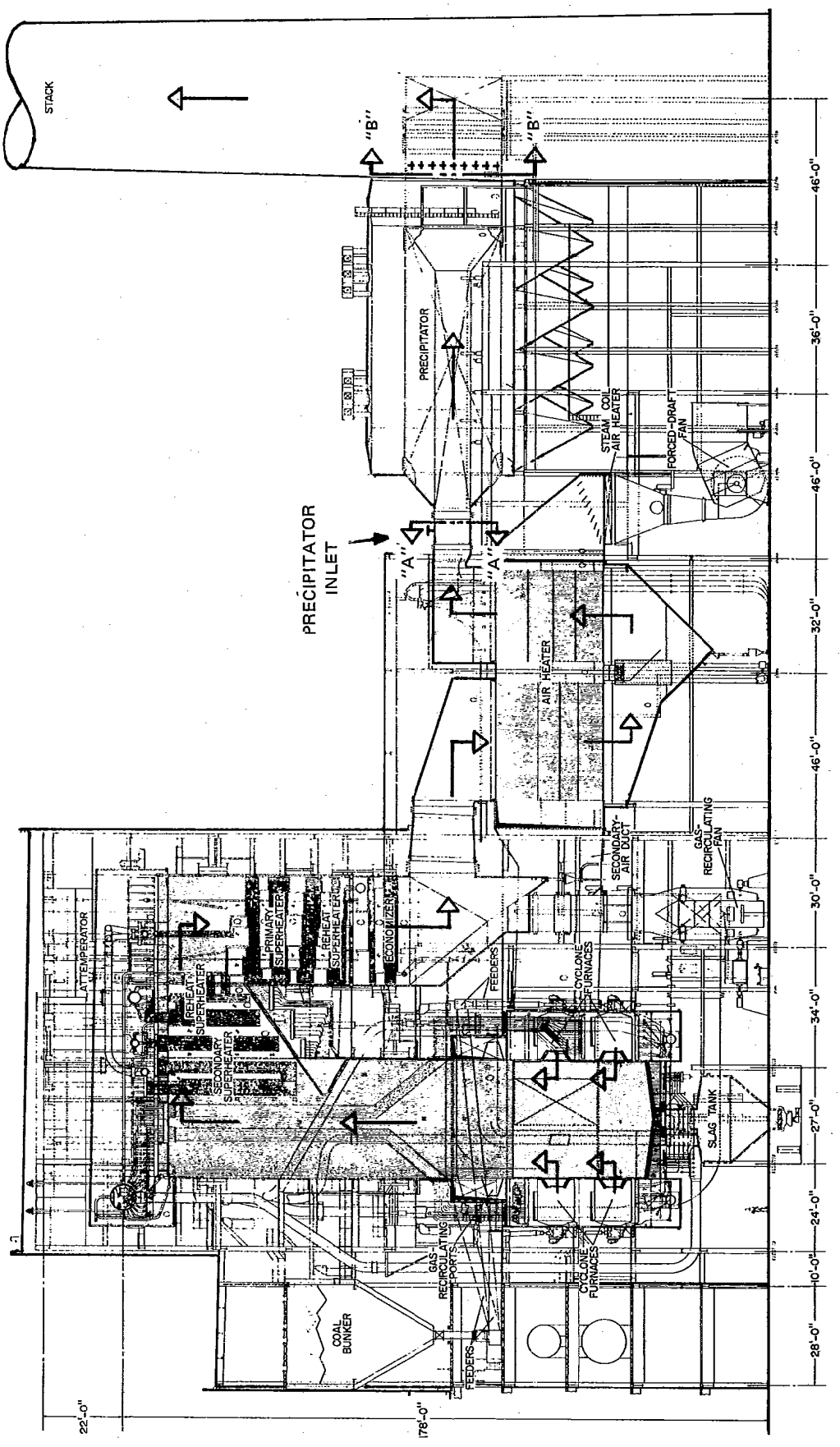


FIG. G-4



Not for Resale

Copyright ASME International
Provided by IHS under license with ASME
No reproduction or networking permitted without license from IHS

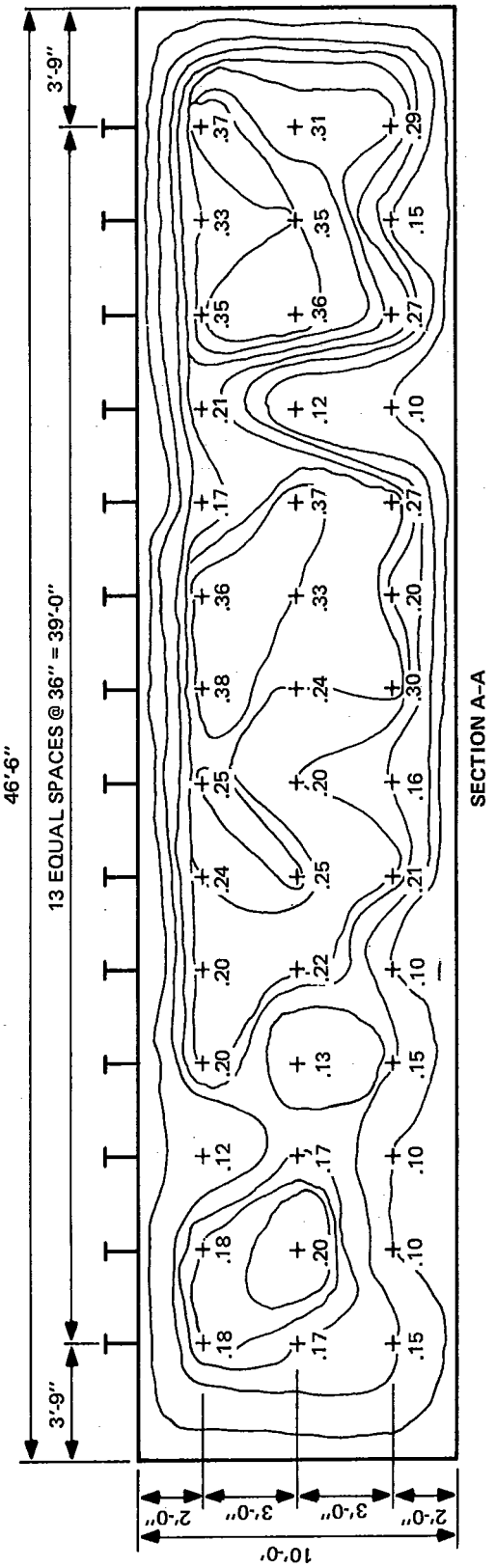


South Precipitator Inlet

| | |
|---|---|
| ACFM by velocity head | 996,030 |
| ACFM from fuel and gas analysis | 840,617 |
| ACFM by velocity head (area weighted) | 844,000 |

FIG. G-4 (Cont'd)



Not for Resale

Copyright ASME International
Provided by IHS under license with ASME
No reproduction or networking permitted without license from IHS

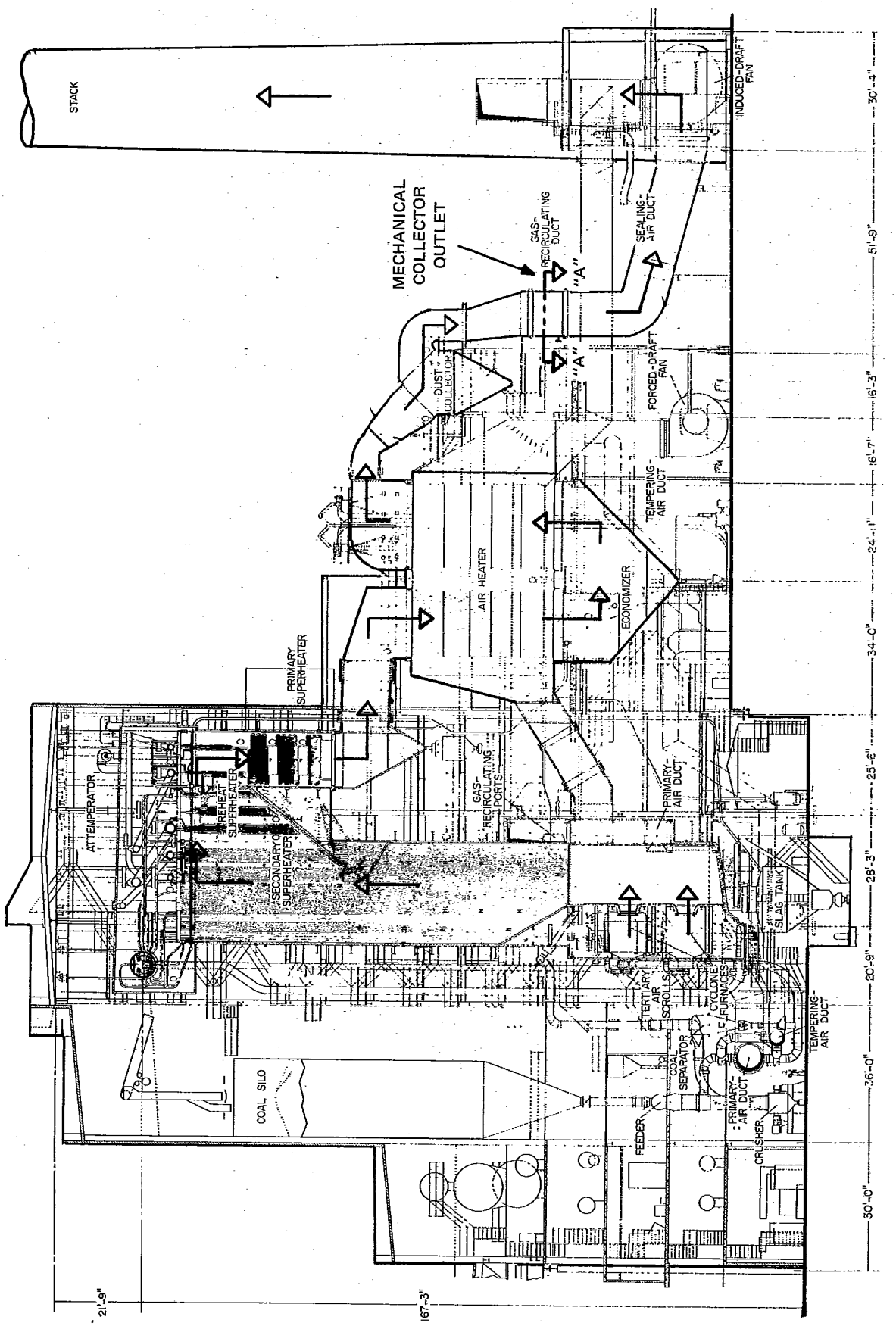


FIG. G-5



Not for Resale

Copyright ASME International
Provided by IHS under license with ASME
No reproduction or networking permitted without license from IHS

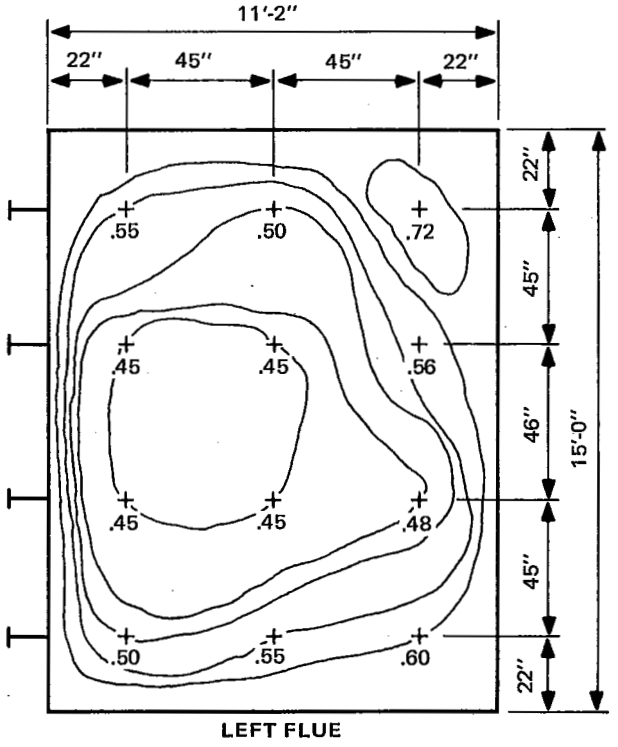


LEFT FLUE

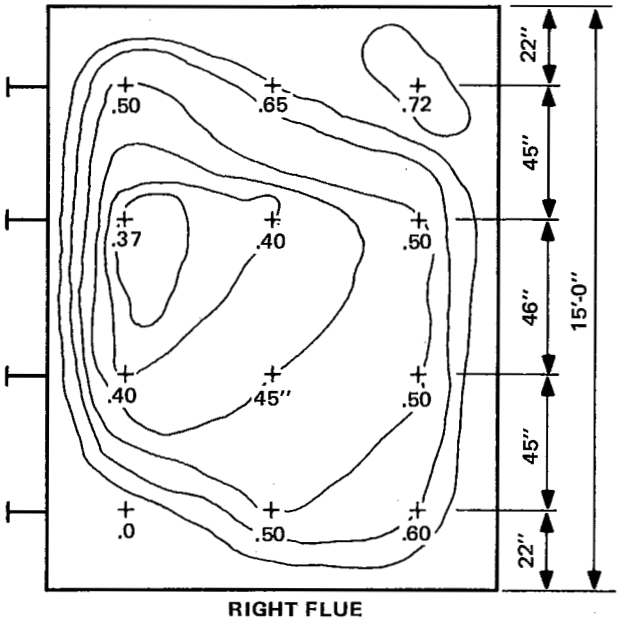


RIGHT FLUE

**Mechanical Collector Outlet**

| | |
|---|---|
| ACFM by velocity head | 1,185,604 |
| ACFM from fuel and gas analysis | 1,015,667 |
| ACFM by velocity head (area weighted) | 1,090,852 |

FIG. G-5 (Cont'd)



Copyright ASME International
Provided by IHS under license with ASME
No reproduction or networking permitted without license from IHS
Not for Resale

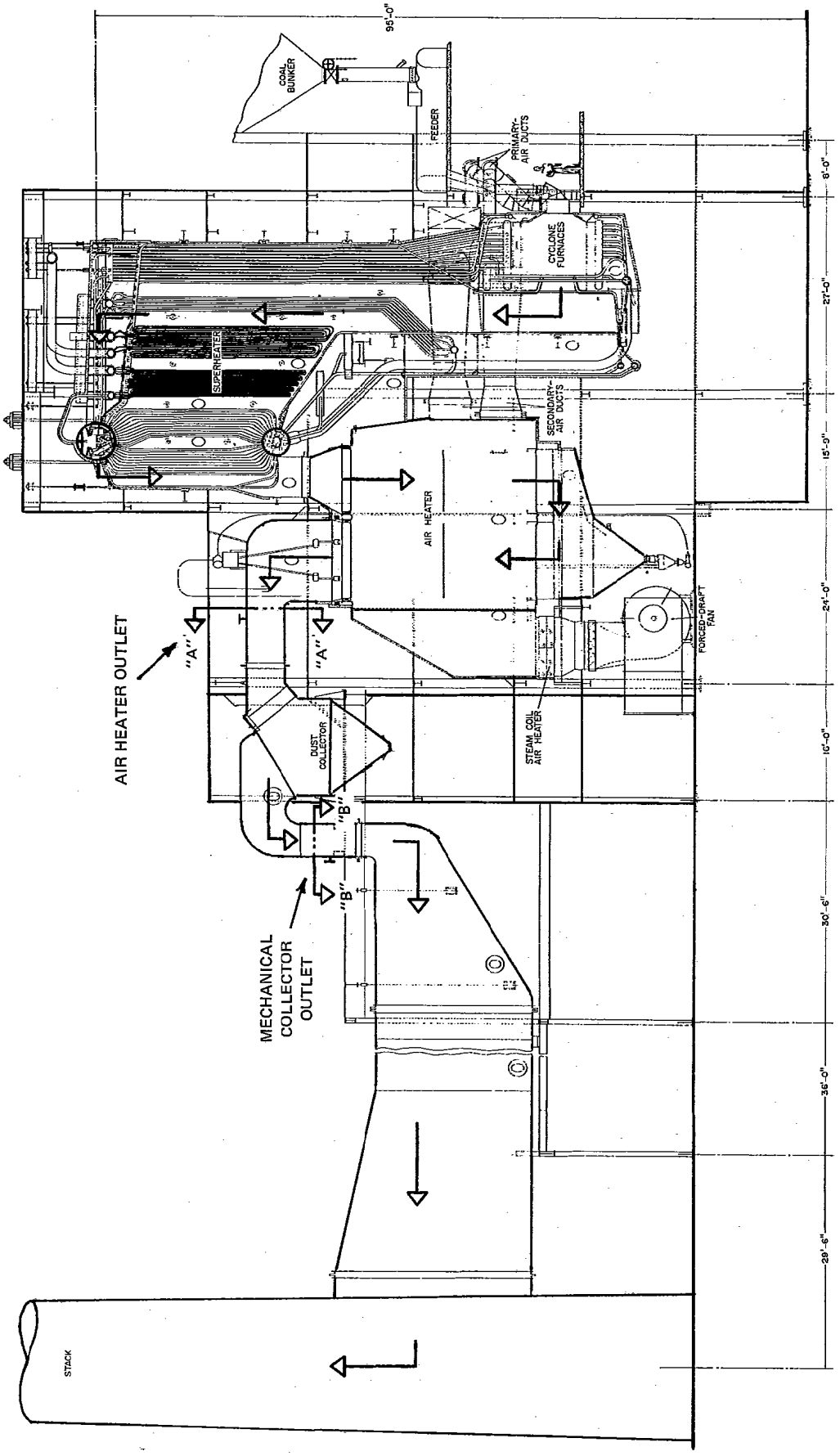


FIG. G-6



Not for Resale

Copyright ASME International
Provided by IHS under license with ASME
No reproduction or networking permitted without license from IHS

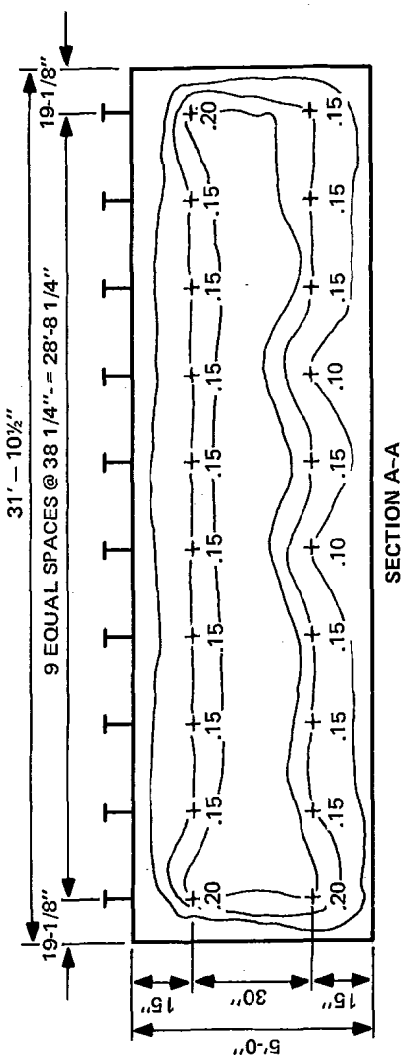


SECTION A-A

**Air Heater Outlet**

| | |
|---|---|
| ACFM by velocity head | 292,940 |
| ACFM from fuel and gas analysis | 241,900 |
| ACFM by velocity head (area weighted) | 239,783 |

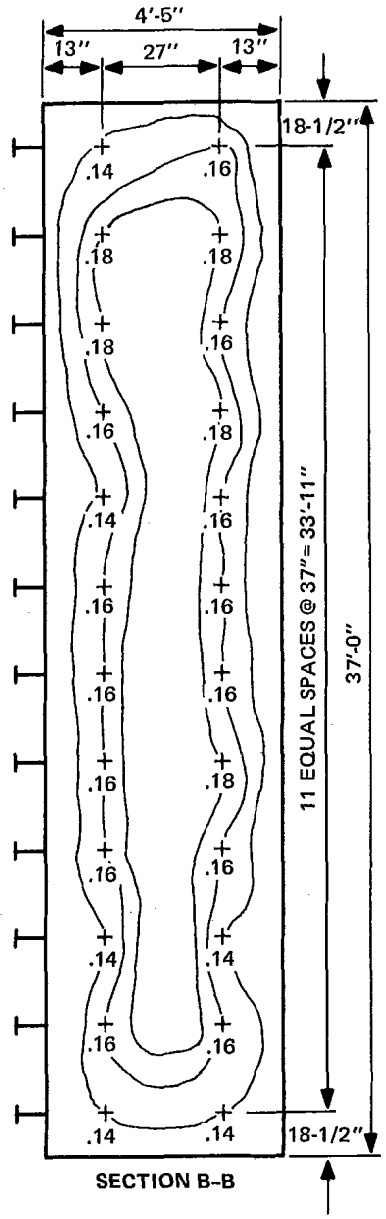


SECTION B–B

**Mechanical Collector Outlet**

| | |
|---|---|
| ACFM by velocity head | 289,080 |
| ACFM from fuel and gas analysis | 241,900 |
| ACFM by velocity head (area weighted) | 242,480 |

FIG. G-6 (Cont'd)



Not for Resale

Copyright ASME International
Provided by IHS under license with ASME
No reproduction or networking permitted without license from IHS

# APPENDIX H

## METHODS FOR DETERMINING NUMBER AND LOCATION OF SAMPLING AREAS

The number and location of sampling points required to obtain valid average gas flow data and representative samples of the particulate matter in the gas stream varies with the conditions at the test site.

In general, when the sampling cross section is located at least 8 equivalent diameters downstream and 2 diameters upstream of any flow disturbance, 12 sample points should be adequate. Figure H-1 is a guide for determining the number of sample points required when sampling large ducts and when the sampling cross section is located closer to upstream and/or downstream flow disturbances. For smaller ducts, a lesser number of sample points may be used, but in no case should less than 4 sample points be used for ducts having a diameter of 2 ft or less. Exploratory Pitot tube traverses, to determine velocity distribution, will indicate if more or less sample points are required to obtain representative sampling data.

Figure H-2 provides guidance for dividing a rectangular or circular duct into equal sampling areas or zones wherein the gas velocity and the particulate matter concentration determined by sampling at the center of each area shall be considered the average conditions prevailing for the area. The number of sampling points, or sampling areas, to be used in laying out the sampling area profile is determined as above.

In certain special cases, it may be necessary or desirable to deviate from the above criteria. This should only be done after attainment of sufficient data for the situation involved in respect to velocity and particulate matter concentration profiles to justify such action. If such action can then be fully justified, the tests may be conducted with the full approval of all the parties concerned. The background for such action, along with complete back-up data, should be fully discussed in the test report.



Copyright ASME International
Provided by IHS under license with ASME
No reproduction or networking permitted without license from IHS

Not for Resale

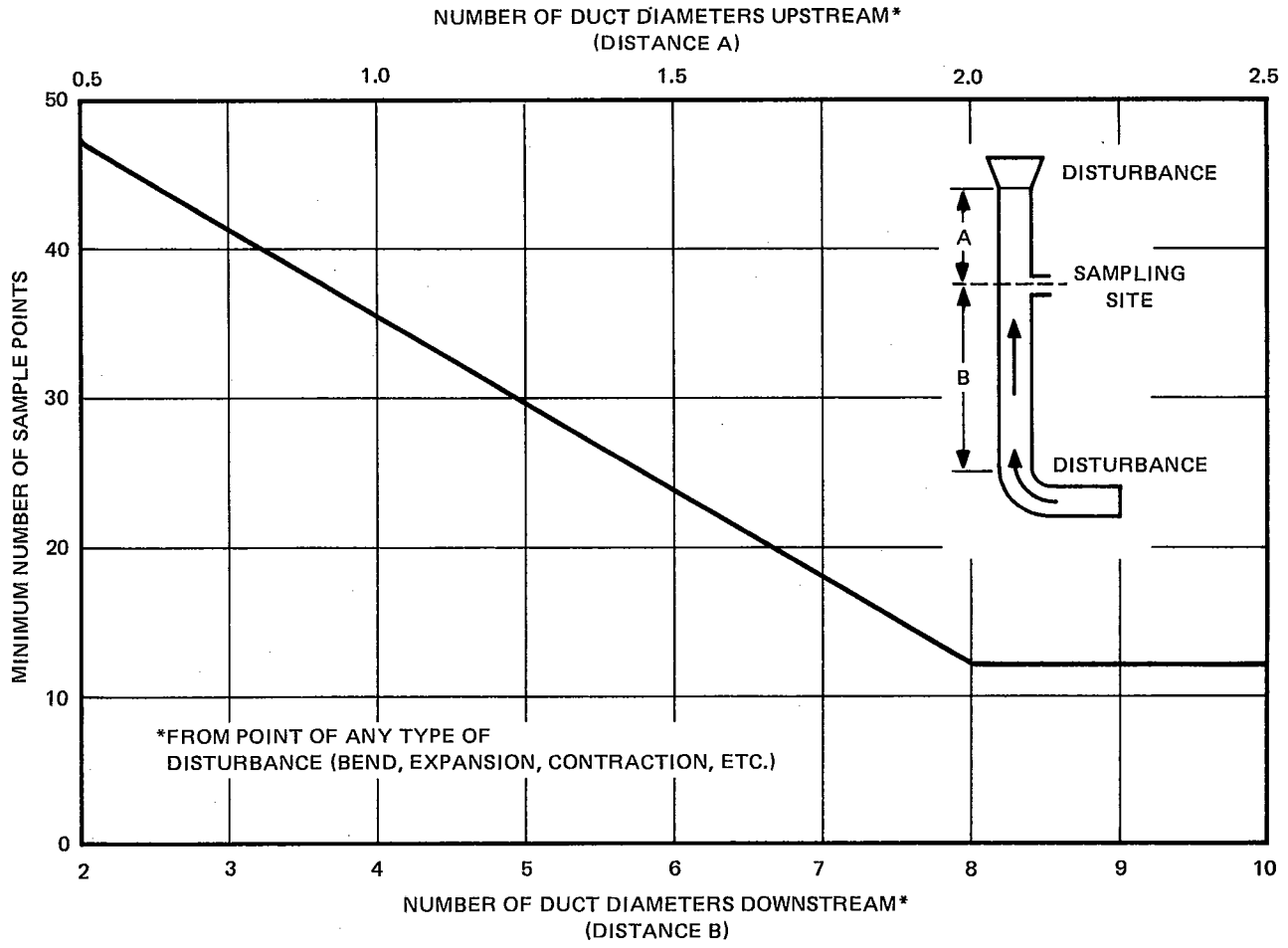


FIG. H-1 METHOD FOR DETERMINING THE NUMBER OF SAMPLE POINTS



Copyright ASME International
Provided by IHS under license with ASME
No reproduction or networking permitted without license from IHS

Not for Resale

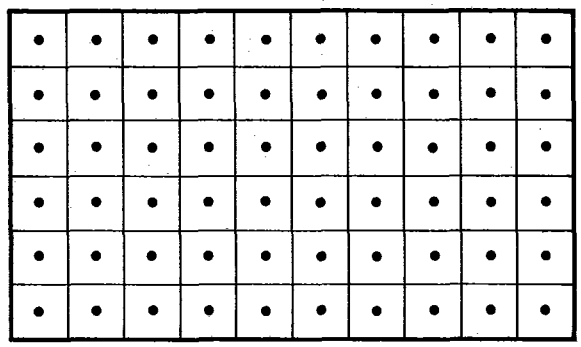

A-CROSS SECTION OF RECTANGULAR DUCT

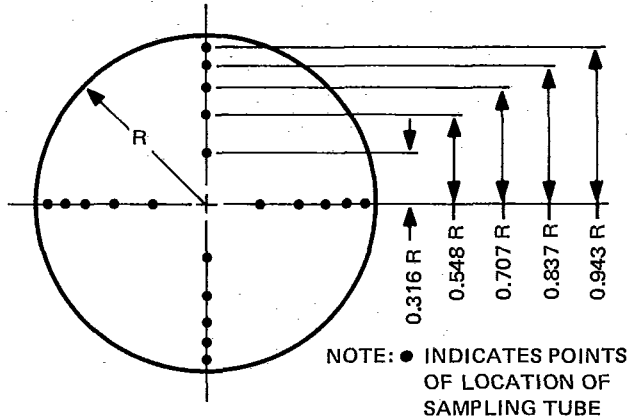


B-CROSS SECTION OF CIRCULAR DUCT

(USE OF 20 SAMPLING POINTS ILLUSTRATED)

Formula for determining location points in circular duct

$$r_p = \sqrt{\frac{2R^2(2p-1)}{n}}$$

where $r_p$ = distance from center of duct to point $p$
$R$ = radius of duct
$p$ = sampling point number. To be numbered from center of duct outward. All four points on same circumference have same number.
$n$ = total number of points

Note: $r_p$ will be in same units as $R$.

Example: Duct radius = $R$; 20 points total.
Distance to point 3 = $r_3$.

$$r_3 = \sqrt{\frac{2R^2(2\cdot 3 - 1)}{n}} = \sqrt{\frac{2R^2 5}{20}} = \sqrt{.5R^2}$$

$$r_3 = 0.707R$$

**FIG. H-2 METHOD FOR SUBDIVIDING DUCT INTO MEASURING AREAS OR ZONES**



Copyright ASME International
Provided by IHS under license with ASME
No reproduction or networking permitted without license from IHS
Not for Resale

ASME PTC*38 80 0759670 0053893 7



# APPENDIX I

## INSTRUMENTATION FOR DETERMINING GAS VELOCITY

A variety of instruments are available for the measurement of gas velocity in a duct or stack. The selection and use of these instruments are discussed in the Code.

On the following pages are illustrations of the most commonly used types of Pitot tubes and another instrument for this purpose, the Fecheimer probe.



Copyright ASME International
Provided by IHS under license with ASME
No reproduction or networking permitted without license from IHS
Not for Resale

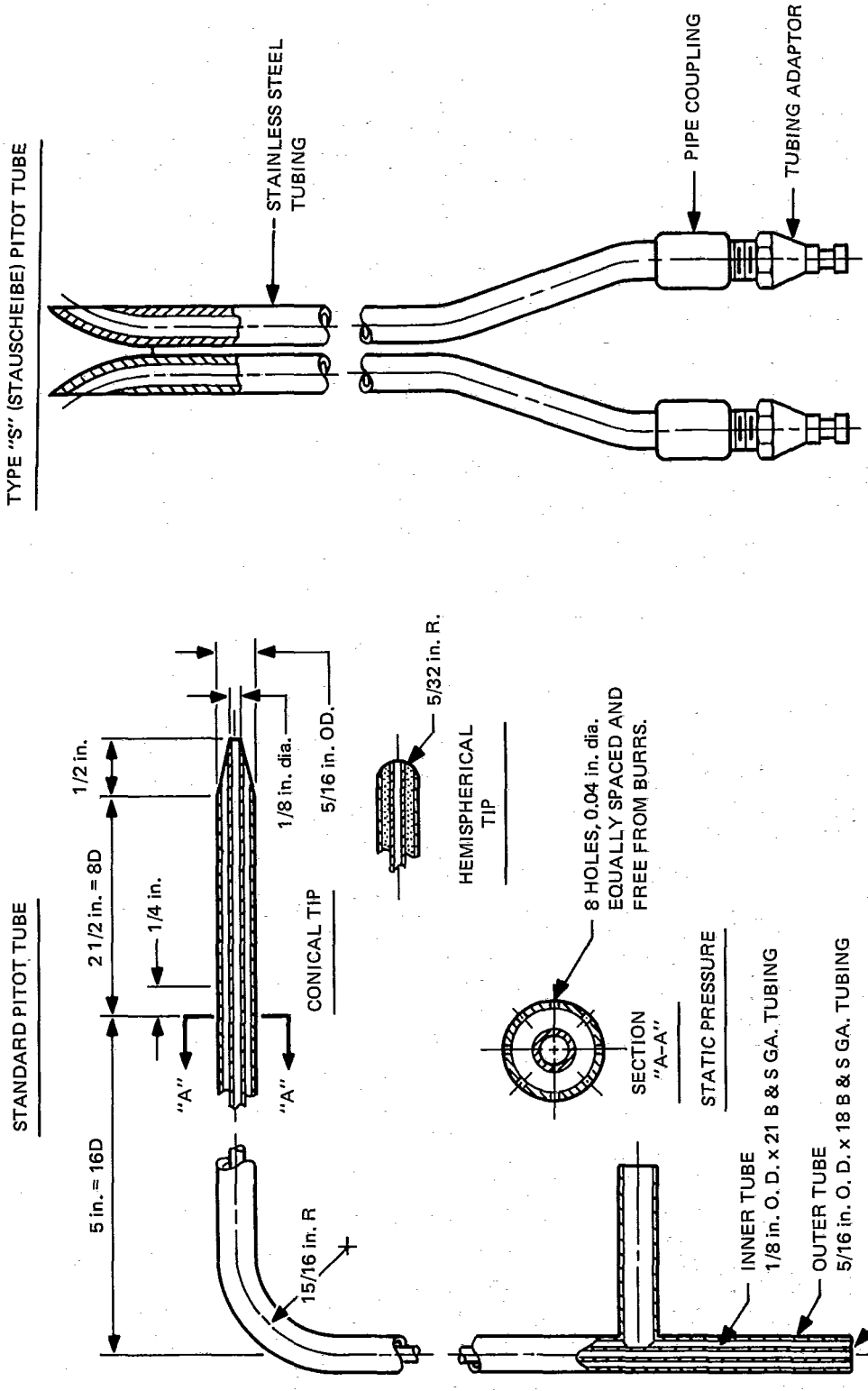


FIG. I-1 PITOT TUBES FOR DUCT GAS VELOCITY DETERMINATION



Not for Resale

Copyright ASME International
Provided by IHS under license with ASME
No reproduction or networking permitted without license from IHS

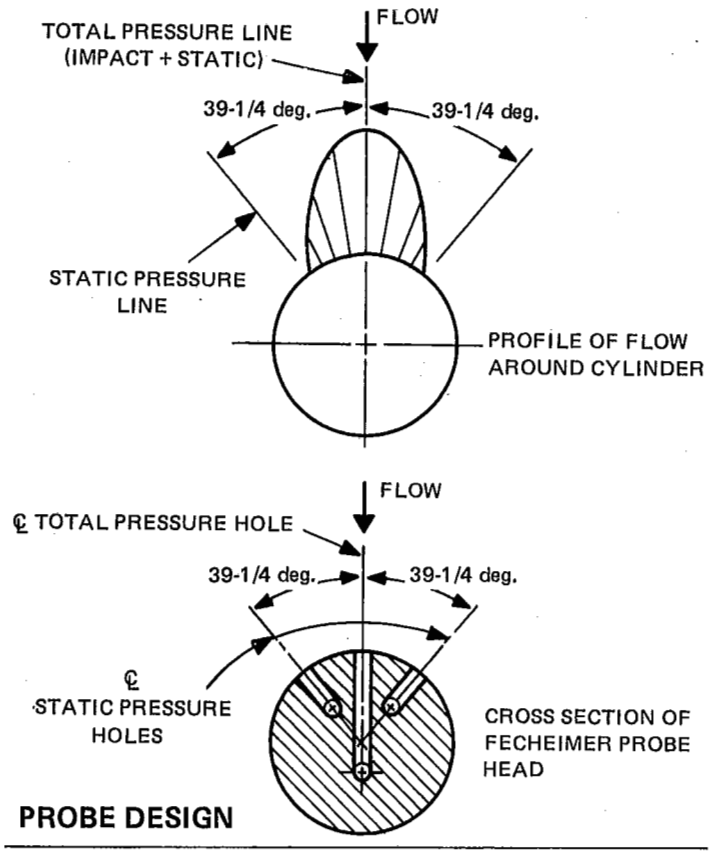


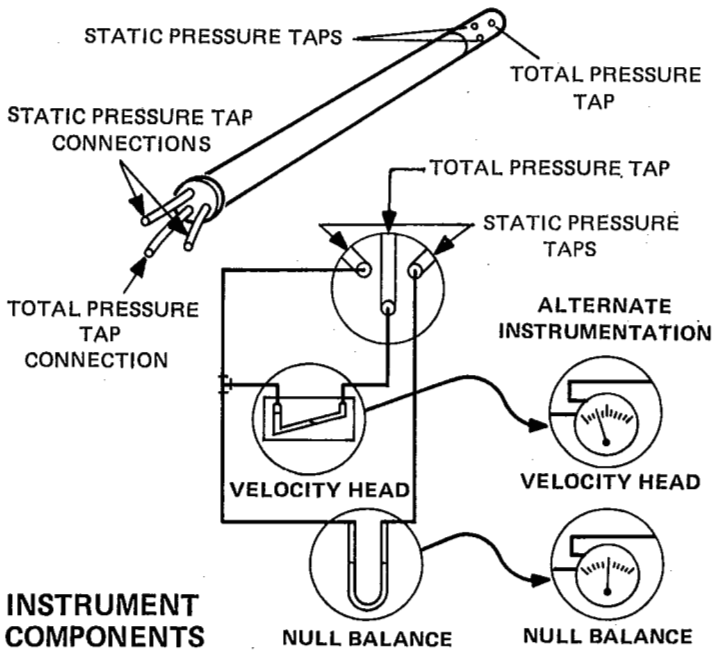


**FIG. I-2 FECHEIMER PROBE — FOR AIR AND GAS FLOW MEASUREMENT**
**(See Reference [33], Section 7, for description of operating principles)**



Copyright ASME International
Provided by IHS under license with ASME
No reproduction or networking permitted without license from IHS

Not for Resale

# APPENDIX J

## DESIGN AND CONSTRUCTION OF FIELD OPERATING GRAPHS

### Isokinetic Sampling System

The following discussion describes a particulate sampling system, to assure isokinetic sampling, which is based on the fact that variations in gas *velocities* and gas *temperatures* are the only values that need to be monitored closely during the sampling operation. In contrast, all of the other parameters exert a relatively small influence so that their magnitude can be predicted with a high degree of precision. This provides the basis for the design of a simple "Operating Graph" which dictates flowmeter settings required during the test.

There is always some departure from isokinetic flow rates regardless of the guidance system and the procedures used—one's objective is to minimize that gap. The systems described in this Section are capable of a high degree of conformity with the isokinetic sampling rule. A departure of 2 to 3 percent is common, but it can almost always be less than 5 percent.

### Construction of an Operating Graph

The procedure described below involves preparation of field operating graphs. One graph indicates required sampling rates in mass units while the other, also in mass units, indicates the flowmeter settings required to deliver the proper flow.

Construction of the first graph is based on prediction of two of the three factors which determine gas density – apparent molecular weight and pressure. It is easily possible to predict *gas densities* within 10 percent, and since flow rate through an orifice flowmeter is proportional to the square root of density, this means that the *sampling rates* indicated by the graph would, in this extreme case, be well below the allowable 10 percent departure from isokinetic flow.

The operating graph illustrated by Graph A (Figs. J-1 and J-2) expresses the gas sampling rates required, in mass units, for a ¼ in. probe (0.00034 ft$^2$ area) as a function of velocity pressure ($h_v$) and gas density ($\rho_s$). A measurement of the velocity pressure and gas temperature in the field indicates immediately, according to the graph, the required gas flow rate corresponding to isokinetic sampling, $G_1$.

The lower charts, Graphs B and C, are the operating lines for the indicating (orifice) flowmeters, the rates of which are given also in mass units. The alignment of the two graphs permits rapid selection of the flowmeter setting, ($h_{fm}$) required to comply with the demands indicated by Graph A.

### I. Graph for Required Sampling Rate, $G_1$

The required sampling rate for isokinetic flow is expressed in mass units and transformed as indicated in the following:

$$\begin{aligned}\text{Required lb/min (G)} &= (\text{lb/ft}^3)\,(\text{ft}^3/\text{min}) \\ &= (\rho_s)\,(V)\,(A_0) \\ &= \rho_s\,(1096)\,(A_0)\sqrt{\frac{h_v}{\rho_s}} \qquad (1) \\ &= 1096\,(A_0)\sqrt{\rho_s \cdot h_v}\end{aligned}$$

#### Construction of Graph – Required Operating Rate

The value of $\rho_s$, density of the stack gas at temperature, $T_s$, is:

$$\rho_s = \frac{MW_w}{359} \times \frac{492}{460 + T_s} \times \frac{P_{sd}}{29.92} \qquad (2)$$

*Example 1:* Graph A, Fig. 1, is an example in which a fixed value of 30 for apparent molecular weight ($MW_m$) and an absolute pressure of 29.92 in. ($P_{sd}$) were predicted. With these values fixed, the expression for stack gas density is:

$$\rho_{s-1} = \frac{30}{359} \cdot \frac{492}{460 + T_s} = \frac{41.1}{460 + T_s}$$

When this is inserted in equation (1), we obtain the following equation for use in the construction of the graph:

$$\text{Required lb/min, } G_1 = 7030\,A_0\sqrt{\frac{h_v}{460 + T_s}} \qquad (3)$$



Copyright ASME International
Provided by IHS under license with ASME
No reproduction or networking permitted without license from IHS
Not for Resale

Substitute the appropriate value of probe area ($A_0$, $ft^2$), then various values of temperature and plot them on log-log paper as illustrated in Graph A, Fig. J-1.

### Symbols

As indicated in the list of symbols, $G$ represents sample gas flow rate and $\rho$, gas density. In the development of relationships below, it is necessary to refer to these and other quantities at different places and different conditions: in the duct or stack, flowmeter gas (dry), flowmeter gas (moist), etc.; and at different times, i.e., before and after the test. A system of subscript labels is employed to aid in keeping the identity of particular quantities clear and distinct.

#### Subscripts -1 and -2

The label -1 attached to any quantity indicates a value that was selected for use before the test. The quantity so labeled is variously referred to as "predicted," "planned," "assumed," and the value used in a statement of "intended" sampling rate. Its *raison d'etre* is simply to distinguish these quantities which were estimated or assumed before the test, from the values available later from the test data itself, i.e., "correct" values.

The post-test "correct" values are labeled -2 and their primary application is for calculation of "departures from isokinetic sampling."

#### G-Values

The symbol $G$ represents sampling rate of the raw, moist stack gas ("planned" or "correct") as represented by Graph A in Figs. J-1 and J-2.

The subscript *-fm* designates flowmeter flow rates. There are two sampling train arrangements affecting this label. One places the flowmeter at a point following a condenser and drier, which removes all moisture. In that case the flowmeter handles dry gas and this is indicated by the addition of the letter *-d* (for dry) in the subscript.

In another arrangement the flowmeter is located to measure a sample of raw, moist stack gas before any condensation can occur, and this is indicated by the additional letter *-m* (for moist) in the subscript.

The same identification symbol ($m$ or $d$) is used to distinguish the molecular weight of moist stack gas ($MW_m$) from that of dry gas at a flowmeter ($MW_d$).

#### Gas Density – $\rho$

Stack gas densities are identified by the subscript *-s* and densities of gas passing through the flowmeter by *-fm*.

Flowmeter gas densities which pertain to moist stack gases are further identified by the additional letter *-m* (moist); and those pertaining to flowmeter gases which follow a drying system, by the letter *-d* (dry).

### II. Flowmeter Graphs

Having constructed the graph for "Required Sampling Rate," it remains to provide a graph for the indicating flowmeter which measures sample flow, one of whose coordinates is also lb/min, the other $h_{fm}$, i.e., the meter reading.

The use of an orifice flowmeter which *indicates* flow is necessary to implement these sampling procedures. This flowmeter provides instantaneous indication of flow rate and if one plots its calibration curve in weight units, provides graphical means whereby the sampling flow requirements can be read from the graph; and a basis also for adjusting the flow rate while referring to the flowmeter indicator.

The two common positions of the flowmeter are (A) downstream from a condenser-dessicant system, and (B) preceding all elements of the train except the sample filter, and maintained at elevated temperatures to avoid condensation. Each requires a different type of graph.

#### (A) Flowmeter Following a Condenser – Graph B, Fig. J-1

Where the train has a condenser preceding the flowmeter, only the *dry gas* portion of the flow ($G_{fm-1d}$) will be indicated by the flowmeter. The remainder ($G_{cond-1}$) is removed by the condenser and the following relationships apply:

$$\begin{array}{ccccc} \text{Required sample flow rate} & = & \text{Metered dry gas flow rate} & + & \text{H}_2\text{O condensation rate} \\ G_1 & \Leftrightarrow & G_{fm-1d} & + & G_{cond-1} \end{array} \tag{4}$$

$$\text{Note that: } G_{cond-1} = \frac{\text{lb } H_2O}{\text{lb dry gas}} \cdot \frac{\text{lb dry gas}}{\text{min}} = M_1 \cdot G_{fm-1d}$$

$$\text{from which } G_{fm-1d} = \frac{G_1}{1 + M_1} \tag{5}$$

These equations imply the practical fact that the condenser desiccant system is intended to remove all of the moisture represented by $H_1$.

The resulting flowmeter graph for numerous values of $M_1$ is shown as Graph B, Fig. J-1.



Copyright ASME International
Provided by IHS under license with ASME
No reproduction or networking permitted without license from IHS

Not for Resale

Where humidity is zero the values of $G_{fm-1d}$ are the same as $G_1$ (Graph A). For positive values of water content, $M_1$, the correct flowmeter setting, $G_{fm-1d}$, is a value displaced from $G_1$ by the fraction $\frac{1}{1+M_1}$.

### (B) Flowmeter at Elevated Temperature (Omitting Condenser) — Graph C, Fig. J-2

It may be convenient in some cases to employ a sampling train which maintains the temperature of the flowmeter above the dewpoint, and which dispenses with a condenser altogether.

In such an arrangement a different type of operating graph illustrated by Graph C, Fig. J-2, is employed.

It can be used wherever the flowmeter temperature is maintained above the dewpoint, including those arrangements which dispose the flowmeter within the stack and thus maintain it at stack temperature. It is also applicable to *high volume sampling trains* where there is minimal cooling of gases before the flowmeter.

The principles and procedures for construction of such a graph are illustrated in the following description, and Graph C.

#### Construction of Graph C

First, derive an equation relating flowmeter delivery, $G_{fm}$, to flowmeter setting, $h_{fm}$, based on the flowmeter calibration line, which will be used to draw several temperature lines as illustrated in Graph C, Fig. J-2. To accomplish this, derive the value of $K$ in the following equation for weight flow rate through the orifice meter.

$$G_{fm-1w} = K\sqrt{h_{fm} \cdot \rho_{fm-1w}} \qquad (6)$$

*Example 2:* The value of $K$ is found by using data given by the calibration line.

Let the flowmeter of Graph B, Fig. J-1, serve in the present application. Select any point for values of $G_{fm-1w}$ and $h_{fm}$, e.g., 0.073 and 2.0, respectively, from the 100°F line ($\rho_{fm-1w}$ = .071 is density at 100°F). Then —

$$K = \frac{0.073}{\sqrt{2.0\,(.071)}} = 0.20$$

From which —

$$h_{fm} = \left(\frac{G_{fm-1w}}{0.20}\right)^2 \cdot \left(\frac{1}{\rho_{fm-1w}}\right) \qquad (7)$$

The basic value of $\rho_{fm-1w}$ is the density of the stack gas, $\rho_{s-1}$, adjusted for any difference in temperature $T_{fm}$, and also any significant pressure difference between stack and flowmeter ($P_{sd}$ vs $P_{fm}$) that may occur due to pressure drop across the sample filter. $P_{fm}$ is the average predicted flowmeter pressure during the run.

Suppose the flowing gas in the stack is predicted to have an average molecular weight of 30, and to be at an absolute pressure of 29.92 in. Hg, average pressure drop across the filter during the run is predicted to be 1 in. Hg. Flowmeter gas density, $\rho_{fm-1w}$, is then

$$\rho_{fm-1w} = \frac{30}{359} \times \frac{492}{460 + T_{fm}} \times \frac{28.92}{29.92}$$

$$= \frac{39.7}{460 + T_{fm}}$$

Substituting this value of flowmeter gas density in equation (7) gives:

$$h_{fm} = \left(\frac{G_{fm-1w}}{0.20}\right)^2 \cdot \left(\frac{460 + T_{fm}}{39.7}\right) \qquad (8)$$

Each value of flowmeter temperature, $t_{fm}$, which is to be represented in the finished graph, is inserted in equation (8), followed by plotting values of $G_{fm-1w}$ and $h_{fm}$.

The flowmeter graph resulting from these operations appears in Fig J-2 as Graph C in the assembly with Graph A previously described.

#### Alternate Graph

When the sample train flowmeter is at elevated temperatures, it may be desirable to use an alternate operating graph. The construction and use of such a graph is described below. It can be used where the stack temperature and pressure are known and remain reasonably constant.

The use of the graph is illustrated by Fig. J-3 where an example of an application is shown for an assumed stack gas temperature and pressure. The design of the graph is based upon the following relationships:

Pitot tube; $V = 1096\sqrt{\frac{h_v}{\rho_s}}$

Let $Q_s$ = volume rate of gas sampled at stack conditions and $Q_{fm}$ = volume rate of gas sampled at orifice conditions.

Then $Q_s = A_0\ V = 1096 A_0\sqrt{\frac{h_v}{\rho_s}}$

and $Q_{fm} = K\sqrt{\frac{h_{fm}}{\rho_{fm}}}$

but $Q_{fm} = Q_s \times \frac{\rho_s}{\rho_{fm}}$



Copyright ASME International
Provided by IHS under license with ASME
No reproduction or networking permitted without license from IHS
Not for Resale

thus $$K\sqrt{\frac{h_{fm}}{\rho_{fm}}} = 1096 A_0 \cdot \frac{\rho_s}{\rho_{fm}} \cdot \sqrt{\frac{h_v}{\rho_s}}$$

$$K^2 \frac{h_{fm}}{\rho_{fm}} = \left(1096 A_0 \times \frac{\rho_s}{\rho_{fm}}\right)^2 \times \frac{h_v}{\rho_s}$$

$$h_{fm} = \frac{\rho_{fm}}{K^2} \left(1096 A_0 \times \frac{\rho_s}{\rho_{fm}}\right)^2 \times \frac{h_v}{\rho_s}$$

$$h_{fm} = \left(\frac{1096 A_0}{K}\right)^2 \times \frac{\rho_s}{\rho_{fm}} \times h_v$$

but $$\frac{\rho_s}{\rho_{fm}} = \frac{T_{fm}}{T_s} \times \frac{P_{sd}}{P_{fm}}$$

thus $$h_{fm} = \left(\frac{1096 A_0}{K}\right)^2 \times \frac{T_{fm}}{T_s} \times \frac{P_{sd}}{P_{fm}} \times h_v$$

For any given sampler configuration, $A_0$ and $K$ are constant, so that it is only necessary to consider the variables $\frac{T_{fm}}{T_s}$ and $\frac{P_{sd}}{P_{fm}}$.

When constructing the graphs for a given test, the stack temperature, $T_s$, and pressure, $P_{sd}$, may be measured prior to the start of the test, and the planned flowmeter differential $h_{fm}$, will then only depend upon $T_{fm}$, $P_{fm}$, and $h_v$, which can be read from instruments while sampling, and corrections to the sampling rate graphically calculated, so as to continuously maintain isokinetic conditions. Deviations from isokinetic will be quite small, as they will be caused only by unexpected variations in the duct temperature and pressure.

The attached example is based upon the following assumed values:

$A_0$ = 0.001 sq ft

$K$ = 0.95

$T_s$ = 800°R (340°F)

$P_{sd}$ = 30 in. Hg

Note that for added convenience, the correction lines for $P_{fm}$, the absolute pressure at the orifice meter, could have been labeled with the static pressure (negative) actually measured at the orifice meter, as the barometric pressure must be known in any case.

## III. Calculating Departures from Isokinetic Sampling

The results of particulate concentration derived from runs where sampling was performed within 10 percent of isokinetic rates are valid results, and no adjustment is required.

It is, however, appropriate to calculate and report the magnitude of the departure from isokinetic rates for each run, indicated by the ratio:

$$\frac{\text{Actual moist gas sampling rate}}{\text{Correct moist gas sampling rate}}$$

Methods of calculation are given in the following for the two types of sampling trains.

### (A) Flowmeter Following a Condenser-Desiccant Unit

The sampling rates are given by the sum of two streams: that represented by the condensation rate, $G_{cond}$, plus the dry gas rate measured by the flowmeter, $G_{fm}$.

#### Actual Sampling Rate

$$\text{Planned moist gas sampling rate} = G_{fm-1d} + G_{cond-1} \quad (9)$$

The planned dry gas sampling rate, $W_{fm-1d}$, was based on pre-test estimates of dry gas density at the flowmeter, $\rho_{fm-1d}$. The following equation uses the known gas density, $\rho_{fm-2d}$ to derive *actual* dry gas flow.

$$\text{Actual moist gas sampling rate} = G_{fm-2d} + G_{cond-2} = G_{fm-1d}\sqrt{\frac{\rho_{fm-2d}}{\rho_{fm-1d}}} + G_{cond-2} \quad (10)$$

The average value of planned sampling rates, $G_{fm-1d}$ and the values making up density of dry gas at the flowmeter, $\rho_{fm-1}$ and $\rho_{fm-2}$, are obtained directly from the test log sheets. The quantity of collected water, $G_{cond-2}$, is the measured quantity for condenser and desiccant.

#### Correct Sampling Rate

The correct sampling rate, $W_2$, is represented by equations (1) and (2) using the correct values of moist stack gas molecular weight, $MW_w$, and absolute pressure in the stack, $P_{sd-2}$, which together with temperature, determine the density $\rho_s$.

$$\text{Correct moist gas sampling rate} = G_2 = G_1\sqrt{\frac{\rho_{s-2}}{\rho_{s-1}}} \quad (11)$$

Individual values of required sampling rates will have been recorded on the log sheets from which the average value, $W_1$, will be calculated for present purposes.

The density corrections indicated in equation (11) are as follows:

$$G_2 = G_1\sqrt{\frac{MW_{m-2}}{MW_{m-1}} \times \frac{P_{sd-2}}{P_{sd-1}}} \quad (12)$$



Copyright ASME International
Provided by IHS under license with ASME
No reproduction or networking permitted without license from IHS
Not for Resale

The departure from isokinetic rates is now given by the ratio –

$$\frac{\text{Actual sampling rate}}{\text{Correct sampling rate}} = \frac{\text{Equation (10)}}{\text{Equation (12)}}$$

### (B) Flowmeter at Elevated Temperatures

During the sampling which employs the type of operating graph illustrated by Graph C, the flowmeter temperature is intended to be constant. If there be any fluctuation, the flow would be immediately regulated, changing the flowmeter indicator setting $h_{fm}$ (ordinate in Graph C) by an appropriate amount.

In either case the "actual" sampling rate would be no different from the "planned" rate. Therefore as indicated on the Graph C abcissa scale, the metered gas flow rate $W_{fm-1w}$ is the same as $W_1$, i.e.:

| Planned Sampling Rate | = | Actual Sampling Rate | = | Required Sampling Rate |
|---|---|---|---|---|
| $G_{fm-1w}$ | = | $G_{fm-2w}$ | = | $G_1$ |

The correct sampling rate previously described, equations (11) and (12) above, applies equally in this system:

$$\text{Correct sampling rate} = G_2 = G_1\sqrt{\frac{\rho_{d-2}}{\rho_{d-1}}} \qquad (13)$$

From which the departure from isokinetic sampling is given by the ratio:

$$= \frac{\text{Actual sampling rate}}{\text{Correct sampling rate}}$$

$$= \frac{G_1}{G_2} = \frac{\text{Equation (13)}}{\text{Equation (12)}}$$

The equation forms below illustrate the use of test data in the calculation of departure from isokinetic sampling:

(1) Correct (isokinetic) sampling rate $= G_2$

$$G_2 = G_1\sqrt{\frac{MW_{m-2}}{MW_{m-1}} \times \frac{P_{sd-2}}{P_{sd-1}}}$$

$$= G_1\sqrt{\frac{\quad}{30} \times \frac{\quad}{29.92}}$$

(2) Actual (moist gas) sampling rate

$$= \text{Measured dry gas rate} + \text{Measured cond. } H_2O$$

$$= G_{fm-2d} + G_{\text{cond}-2}$$

$$= G_{fm-1d}\sqrt{\frac{P_{fm-2}}{29.92} \times \frac{460 + 70}{T_{fm}} \times \frac{MW_{d-2}}{29}}$$

$$= ___\sqrt{\frac{\quad}{29.92} \times \frac{530}{\quad} \times \frac{\quad}{29}}$$

(3) % Isokinetic $= \frac{[\#2]}{[\#1]}___ \times 100 = ____\%$



Copyright ASME International
Provided by IHS under license with ASME
No reproduction or networking permitted without license from IHS
Not for Resale

## LOG SHEET DESIGN

Implementation of this system requires systematic recording of test data. Following is a list of data required to be recorded in the field log sheet.

| Data | Symbols |
|---|---|
| **Data or samples for subsequent determination molecular weight** | |
| Dry gas composition: $CO_2$, $O_2$, $N_2$, etc. | $MW_d$ |
| Moisture content: $H_2O$ | $MW_m$ |
| **Spot measurements, stack** | |
| Gas velocity pressures | $h_v$ |
| Gas temperatures | $T_s$ |
| Barometric pressure and stack static pressure | $P_{sd-2}$ |
| **Operating data from graph, etc.** | |
| Sampling times | |
| Planned moist gas sampling rate, Graph A | $G_1$ |
| Planned dry gas sampling rate, Graph B | $G_{fm-1d}$ |
| Flowmeter static pressure | $P_{fm-2}$ |
| Flowmeter temperature | $T_{fm-2}$ |



Copyright ASME International
Provided by IHS under license with ASME
No reproduction or networking permitted without license from IHS
Not for Resale

### Graph A

Required gas flow rate for ¼ in. probe:

$$A_0 = 0.00034 \text{ ft}^2$$

$$G_1 = 1096\, A_0 \sqrt{\rho_{d-1}\, h_v}$$

### Graph B

Dry gas flow requirements and settings of orifice flowmeter for compliance with $G_1$ and $M$; based on gas density at flowmeter,

$$\rho_{fm-1d} = 0.075 \text{ lb/ft}^3$$

This graph is based on a predicted gas density of 0.075 lb/ft³. This prediction is not always applicable in cases when the negative pressure is large and variable.

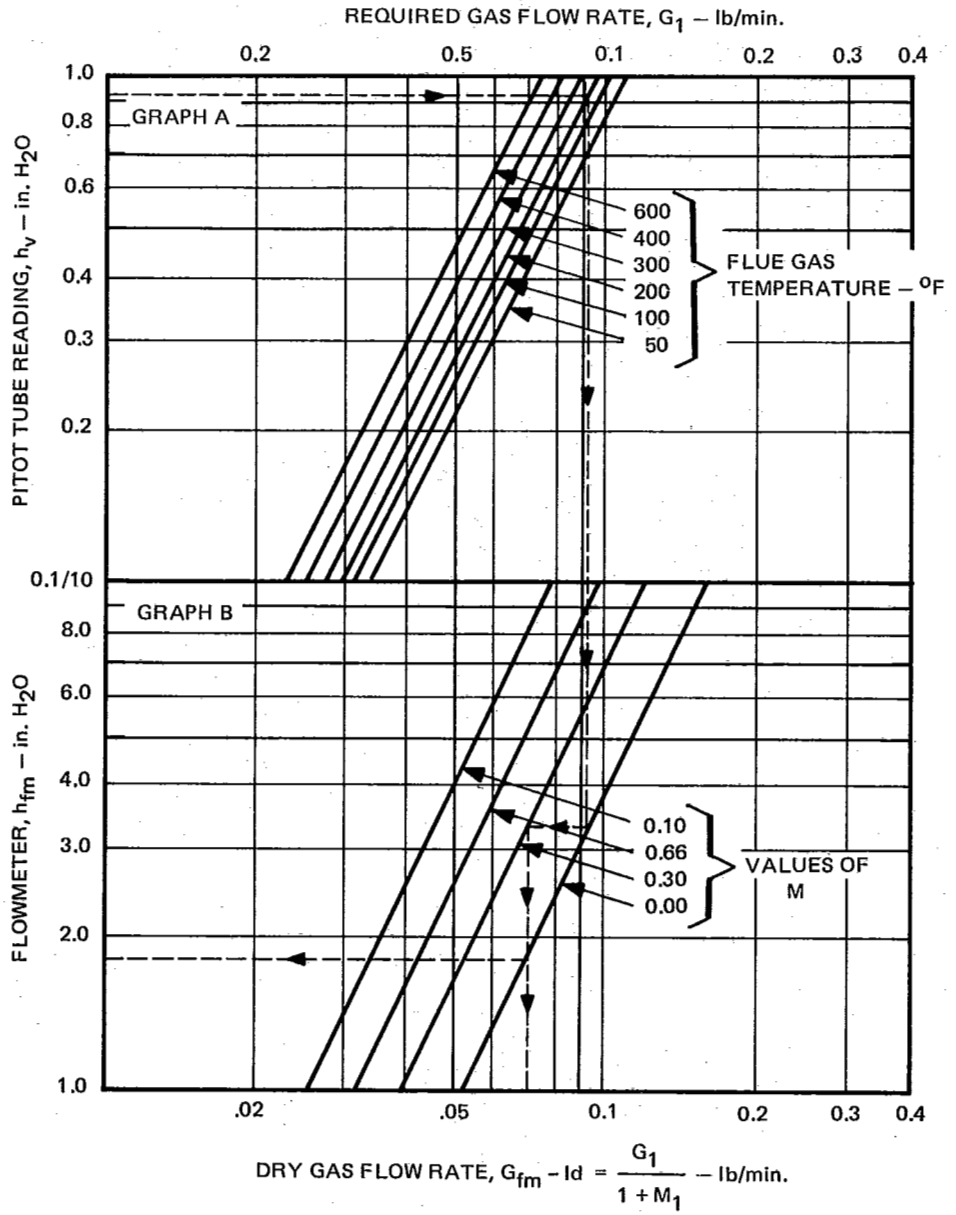


FIG. J-1 OPERATING GRAPHS



Copyright ASME International
Provided by IHS under license with ASME
No reproduction or networking permitted without license from IHS
Not for Resale

Graph A

Required gas flow rate for ¼ in. probe.

$$A_0 = 0.00034 \text{ ft}^2$$

$$G_1 = 1096\, A_0 \sqrt{\rho_{d-1}\, h_v}$$

Graph C

Orifice flowmeter for operation at elevated temperatures (above dewpoint).

$$\text{Predicted } \rho_{fm-1m} = \frac{39.7}{460 + T_s}$$

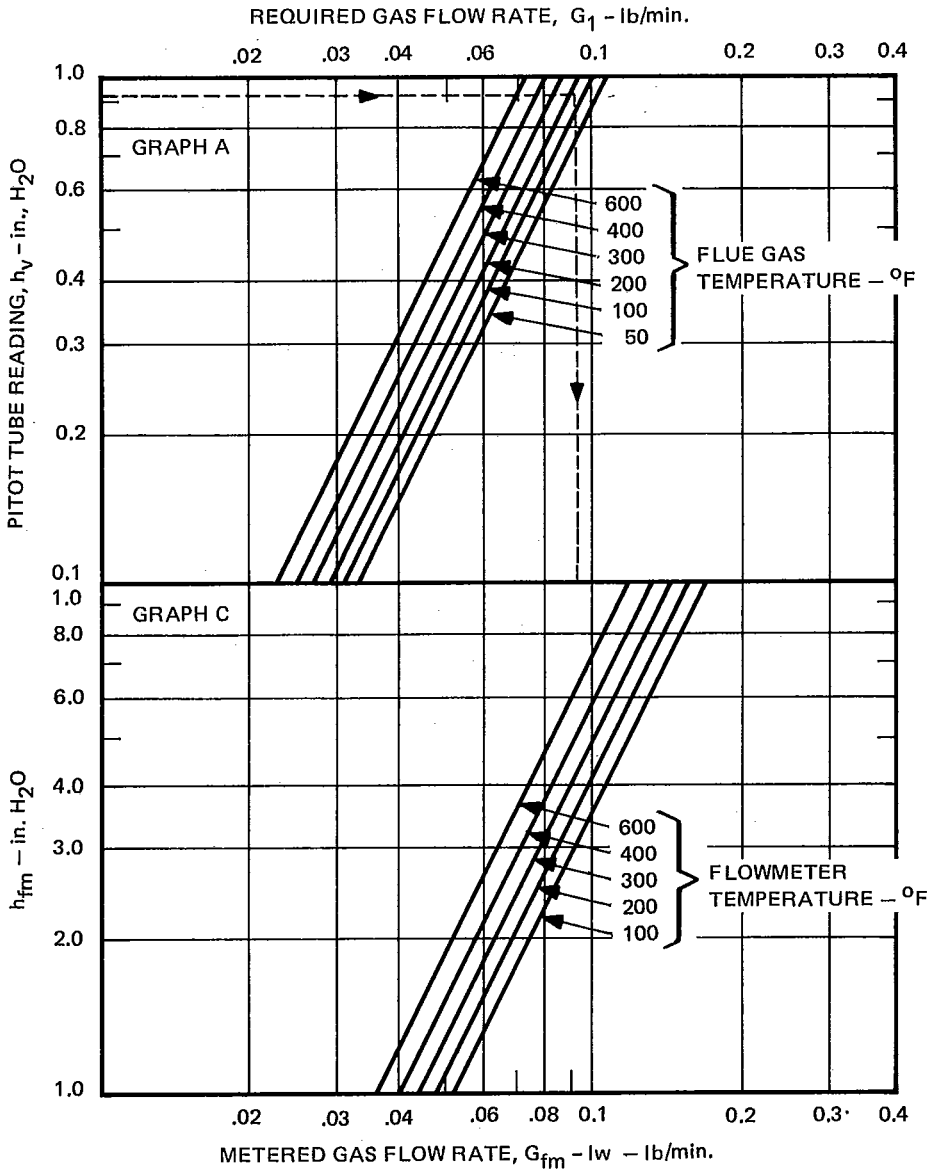


FIG. J-2 OPERATING GRAPHS



Copyright ASME International
Provided by IHS under license with ASME
No reproduction or networking permitted without license from IHS

Not for Resale

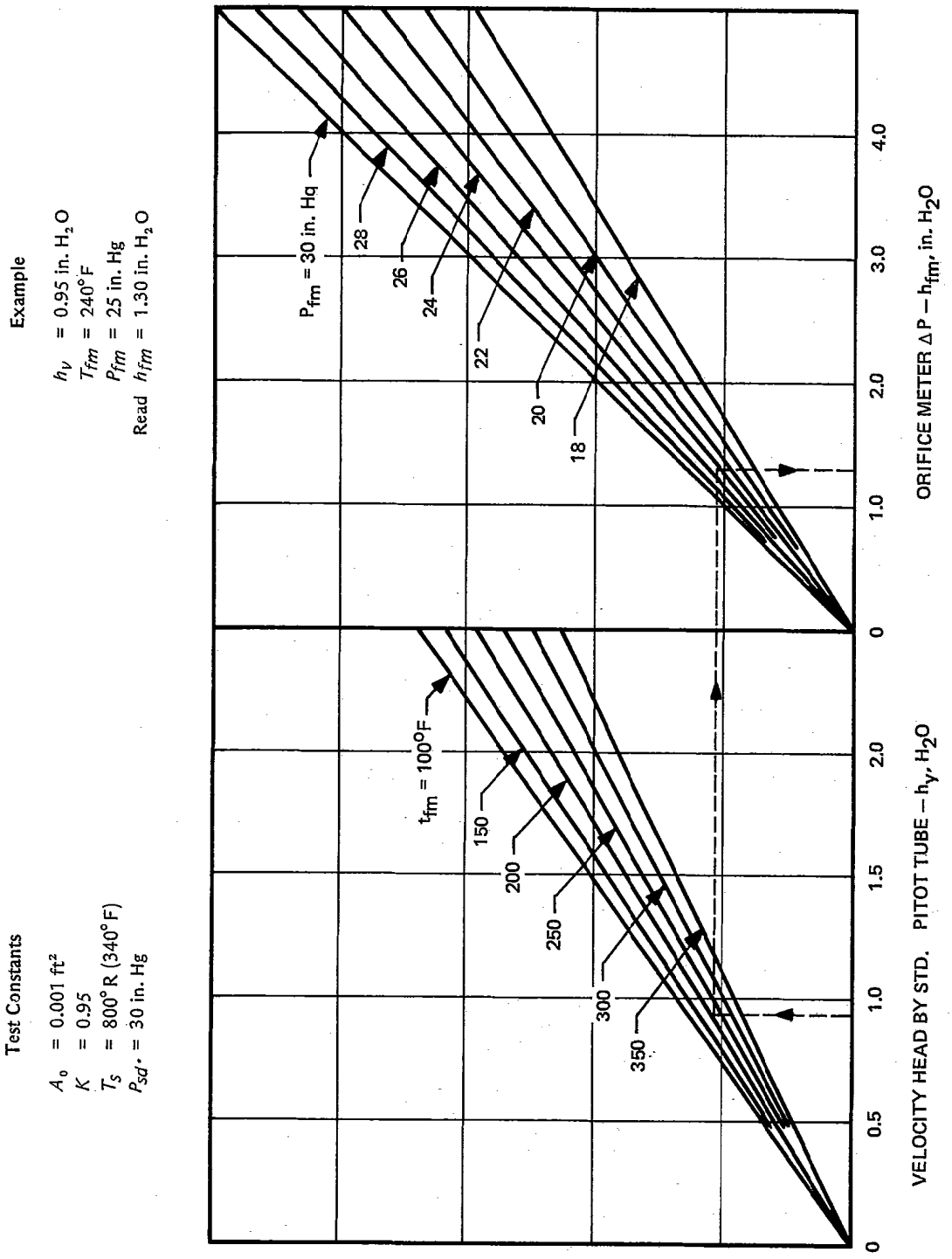


FIG. J-3 ALTERNATE OPERATING GRAPH



Not for Resale

Copyright ASME International
Provided by IHS under license with ASME
No reproduction or networking permitted without license from IHS

## Symbols

$V$ = flue gas velocity, ft/min

$\rho_s$ = stack gas density, lb/ft$^3$

$\rho_{s-1}$ = predicted gas density at stack conditions, lb/ft$^3$

$\rho_{s-2}$ = actual gas density at stack conditions, lb/ft$^3$

$\rho_{fm-1d}$ and $\rho_{fm-1m}$ = dry gas and moist gas predicted gas densities, respectively, at flowmeter conditions, used in planning the Operating Graph

$\rho_{fm-2d}$ and $\rho_{fm-2m}$ = dry gas the moist gas densities, respectively, at flowmeter conditions that actually prevailed during the test

$G_1$ = planned sampling rate (moist stack gas), lb/min, based on predicted values $\rho_f \rho_{s-1}$ and indicated by the Operating Graph A

$G_2$ = correct sampling rate (moist stack gas), lb/min, based on measured value of stack gas density, $\rho_{s-2}$

$MW_m$ = molecular weight, moist stack gas

$MW_d$ = molecular weight, dry gas

$G_{fm-1d}$ and $G_{fm-1m}$ = flowmeter sampling rates, dry and moist gas, respectively, as planned, based on predicted flowmeter gas density, $\rho_{fm-1}$

$G_{fm-2d}$ and $G_{fm-2m}$ = flowmeter sampling rates, dry and moist gas, respectively, that actually prevailed during sampling, using flowmeter gas density $\rho_{fm-2m}$ or $\rho_{fm-2d}$

$G_{cond-1}$ = partial sampling rate due to condensation of water in condenser preceding flowmeter (predicted)

$G_{cond-2}$ = partial sampling rate due to condensation of water in condenser preceding flowmeter (measured)

$h_{fm}$ = flowmeter pressure differential, in. $H_2O$

$h_v$ = velocity pressure, stack gas, in. $H_2O$

$A_0$ = sampling nozzle opening area, ft$^2$

$M$ = stack gas humidity, lb $H_2O$/lb dry gas

$T_s$ = stack gas temperature, °F

$T_{fm}$ = flowmeter gas temperature, °F

$P_{sd}$ = absolute pressure in stack, in. Hg (barometric pressure plus induced pressure)

$P_{fm}$ = absolute pressure at flowmeter, in. Hg

$\rho_{fm}$ = static pressure at flowmeter, in. Hg



Copyright ASME International
Provided by IHS under license with ASME
No reproduction or networking permitted without license from IHS

Not for Resale

# APPENDIX K

## GRAPHS AND TABLES OF USEFUL DATA

Contained herein are various graphs and tables of useful data frequently used during the planning and execution of field tests and in the calculation of test results. Included are the following:

Fig. K-1 Psychrometric Chart – Low Temperatures
Fig. K-2 Psychrometric Chart – Medium Temperatures
Fig. K-3 Psychrometric Chart – High Temperatures
Fig. K-4 Table of Conversion Factors
Fig. K-5 International Atomic Weights
Fig. K-6 Combustion Constants
Fig. K-7 Temperature Conversion Table
Fig. K-8 Conversion Factors – Gas Flow Rates
Fig. K-9 Relationship Between Velocity Head and Velocity
Fig. K-10 Relationship Between Nozzle Size and Flow Rate



Copyright ASME International
Provided by IHS under license with ASME
No reproduction or networking permitted without license from IHS

Not for Resale

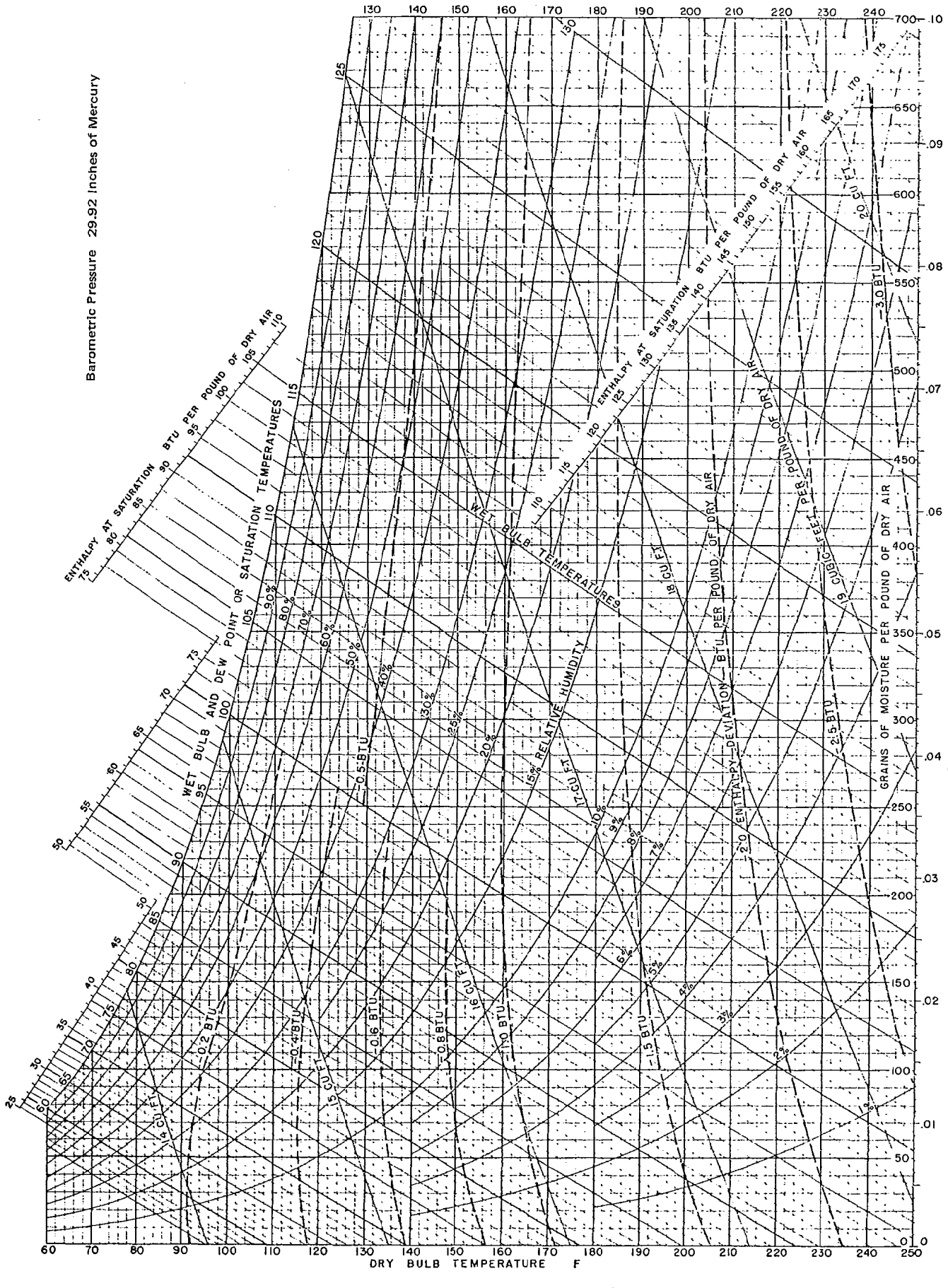


FIG. K-1 PSYCHROMETRIC CHART – LOW TEMPERATURES



Not for Resale
Copyright ASME International
Provided by IHS under license with ASME
No reproduction or networking permitted without license from IHS

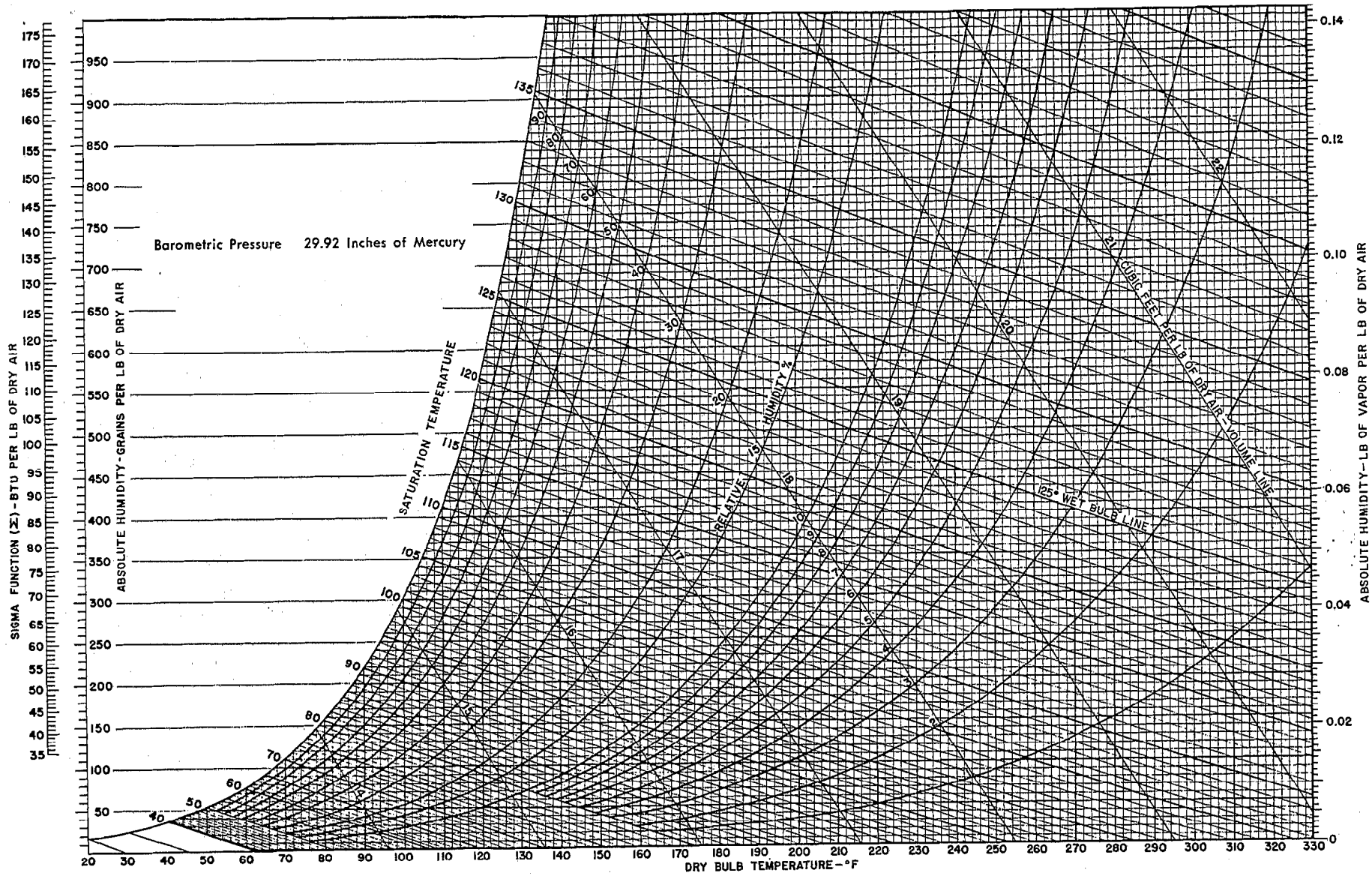


FIG. K-2 PSYCHROMETRIC CHART — MEDIUM TEMPERATURES



ASME PTC*38 80 ■ 0759670 0053908 5 ■

Copyright ASME International
Provided by IHS under license with ASME
No reproduction or networking permitted without license from IHS
Not for Resale

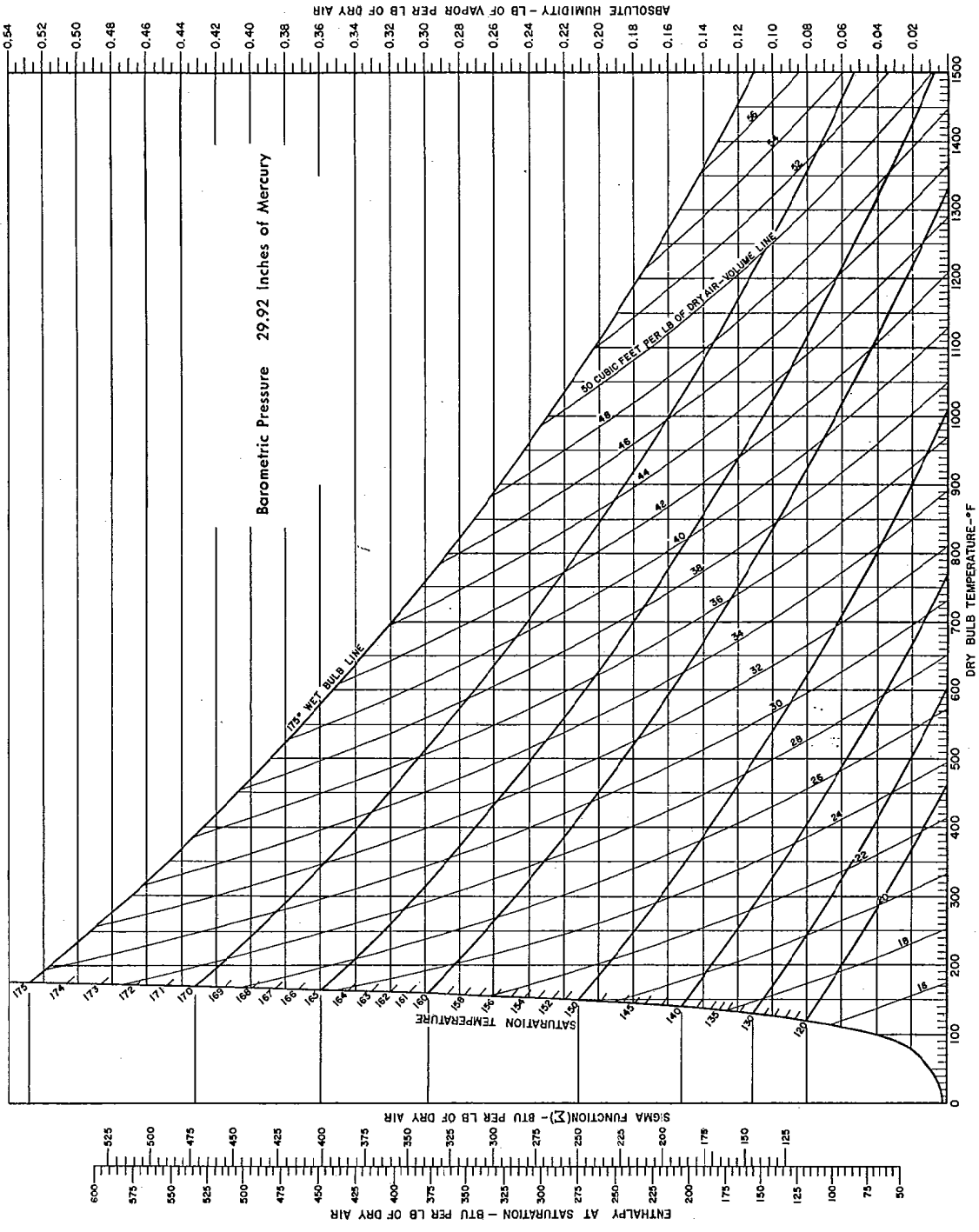


FIG. K-3 PSYCHROMETRIC CHART — HIGH TEMPERATURES



Not for Resale

Copyright ASME International
Provided by IHS under license with ASME
No reproduction or networking permitted without license from IHS

## FIG. K-4 CONVERSION TABLES

### Gas Flow Rates

| CFM | $m^3/min$ | $m^3/s$ |
|---|---|---|
| 1.000 | 2.832 E-02 | 4.720 E-04 |
| 3.531 E+01 | 1.000 | 1.667 E-02 |
| 2.119 E+03 | 6.000 E+01 | 1.000 |
| — | — | — |
| — | — | — |
| — | — | — |
| — | — | — |

| lb/hr | lb/min | kg/min | kg/s |
|---|---|---|---|
| — | — | — | — |
| — | — | — | — |
| — | — | — | — |
| 1.000 | 1.667 E-02 | 7.560 E-03 | 1.260 E-04 |
| 6.000 E+01 | 1.000 | 4.536 E-01 | 7.560 E-03 |
| 1.323 E+02 | 2.205 E+00 | 1.000 | 1.667 E-02 |
| 7.938 E+03 | 1.323 E+02 | 6.000 E+01 | 1.000 |

### Concentration of Particulate Matter in Gas

| lb/1000 $ft^3$ | grains/$ft^3$ | mg/$m^3$ |
|---|---|---|
| 1.000 | 7.000 E+00 | 1.602 E+04 |
| 1.429 E-01 | 1.000 | 2.288 E-03 |
| 6.243 E-05 | 4.371 E+02 | 1.000 |
| — | — | — |

### Gas Pressure

| mm Hg | in. Hg | in. $H_2O$ | Atmospheres |
|---|---|---|---|
| 1.000 | 3.937 E-02 | 5.353 E-01 | 1.316 E-03 |
| 2.540 E+01 | 1.000 | 1.360 E+01 | 3.342 E-02 |
| 1.866 E+00 | 7.348 E-02 | 1.000 | 2.458 E-03 |
| 7.600 E+02 | 2.992 E+01 | 4.071 E+02 | 1.000 |

### Correction for Moisture Content of Gas

When $M$ = wt $H_2O$/wt dry gas,
to correct particulate matter concentration:

Wet Gas → Dry Gas, multiply by $(1+M)$
Dry Gas → Wet Gas, multiply by $1/(1+M)$

### Heating Value of Fuels

| | | |
|---|---|---|
| Btu/lb | kcal/kg | 5.556 E-01 |
| kcal/kg | Btu/lb | 1.800 E+00 |

### Gas Densities

| Gas | Mol Wt | $\rho$, in lb/$ft^3$ 60° F, 30 in. Hg | $\rho$, in lb/$ft^3$ 68° F, 29.92 in. Hg |
|---|---|---|---|
| $O_2$ | 32.00 | 0.0846 | 0.0831 |
| $N_2$ | 28.01 | 0.0744 | 0.0731 |
| $CO_2$ | 44.01 | 0.117 | 0.115 |
| CO | 28.01 | 0.0740 | 0.0727 |
| $H_2O$ | 18.02 | 0.0476 | 0.0468 |
| Air | — | 0.0766 | 0.0752 |





Copyright ASME International
Provided by IHS under license with ASME
No reproduction or networking permitted without license from IHS
Not for Resale

## FIG. K-5 INTERNATIONAL ATOMIC WEIGHTS

(Based on Carbon = 12.00)

| | Symbol | Atomic Number | Atomic Weight |
|---|---|---|---|
| Actinium | Ac | 89 | [227] * |
| Aluminum | Al | 13 | 26.9815 |
| Americium | Am | 95 | [243] * |
| Antimony | Sb | 51 | 121.75 |
| Argon | Ar | 18 | 39.948 |
| Arsenic | As | 33 | 74.9216 |
| Astatine | At | 85 | [210] * |
| Barium | Ba | 56 | 137.34 |
| Berkelium | Bk | 97 | [249] * |
| Beryllium | Be | 4 | 9.0122 |
| Bismuth | Bi | 83 | 208.980 |
| Boron | B | 5 | 10.811[a] |
| Bromine | Br | 35 | 79.909[b] |
| Cadmium | Cd | 48 | 112.40 |
| Calcium | Ca | 20 | 40.08 |
| Californium | Cf | 98 | [251] * |
| Carbon | C | 6 | 12.01115 |
| Cerium | Ce | 58 | 140.12 |
| Cesium | Cs | 55 | 132.905 |
| Chlorine | Cl | 17 | 35.453[b] |
| Chromium | Cr | 24 | 51.996[b] |
| Cobalt | Co | 27 | 58.9332 |
| Copper | Cu | 29 | 63.54 |
| Curium | Cm | 96 | [247] * |
| Dysprosium | Dy | 66 | 162.50 |
| Einsteinium | Es | 99 | [254] * |
| Erbium | Er | 68 | 167.26 |
| Europium | Eu | 63 | 151.96 |
| Fermium | Fm | 100 | [253] * |
| Fluorine | F | 9 | 18.9984 |
| Francium | Fr | 87 | [223] * |
| Gadolinium | Gd | 64 | 157.25 |
| Gallium | Ga | 31 | 69.72 |
| Germanium | Ge | 32 | 72.59 |
| Gold | Au | 79 | 196.967 |
| Hafnium | Hf | 72 | 178.49 |
| Helium | He | 2 | 4.0026 |
| Holmium | Ho | 67 | 164.930 |
| Hydrogen | H | 1 | 1.00797[a] |
| Indium | In | 49 | 114.82 |
| Iodine | I | 53 | 126.9044 |
| Iridium | Ir | 77 | 192.2 |
| Iron | Fe | 26 | 55.847[b] |
| Krypton | Kr | 36 | 83.80 |
| Lanthanum | La | 57 | 138.91 |
| Lead | Pb | 82 | 207.19 |
| Lithium | Li | 3 | 6.939 |
| Lutetium | Lu | 71 | 174.97 |
| Magnesium | Mg | 12 | 24.312 |
| Manganese | Mn | 25 | 54.9380 |
| Mendelevium | Md | 101 | [256] * |
| Mercury | Hg | 80 | 200.59 |
| Molybdenum | Mo | 42 | 95.94 |
| Neodymium | Nd | 60 | 144.24 |
| Neon | Ne | 10 | 20.183 |
| Neptunium | Np | 93 | [237] * |
| Nickel | Ni | 28 | 58.71 |
| Niobium | Nb | 41 | 92.906 |
| Nitrogen | N | 7 | 14.0067 |
| Nobelium | No | 102 | [254] * |
| Osmium | Os | 76 | 190.2 |
| Oxygen | O | 8 | 15.9994[a] |
| Palladium | Pd | 46 | 106.4 |
| Phosphorus | P | 15 | 30.9738 |
| Platinum | Pt | 78 | 195.09 |
| Plutonium | Pu | 94 | [242] * |
| Polonium | Po | 84 | [210] * |
| Potassium | K | 19 | 39.102 |
| Praseodymium | Pr | 59 | 140.907 |
| Promethium | Pm | 61 | [147] * |
| Protactinium | Pa | 91 | [231] * |
| Radium | Ra | 88 | [226] * |
| Radon | Rn | 86 | [222] * |
| Rhenium | Re | 75 | 186.2 |
| Rhodium | Rh | 45 | 102.905 |
| Rubidium | Rb | 37 | 85.47 |
| Ruthenium | Ru | 44 | 101.07 |
| Samarium | Sm | 62 | 150.35 |
| Scandium | Sc | 21 | 44.956 |
| Selenium | Se | 34 | 78.96 |
| Silicon | Si | 14 | 28.086[a] |
| Silver | Ag | 47 | 107.870[b] |
| Sodium | Na | 11 | 22.9898 |
| Strontium | Sr | 38 | 87.62 |
| Sulfur | S | 16 | 32.064[a] |
| Tantalum | Ta | 73 | 180.948 |
| Technetium | Tc | 43 | [99] * |
| Tellurium | Te | 52 | 127.60 |
| Terbium | Tb | 65 | 158.924 |
| Thallium | Tl | 81 | 204.37 |
| Thorium | Th | 90 | 232.038 |
| Thulium | Tm | 69 | 168.934 |
| Tin | Sn | 50 | 118.69 |
| Titanium | Ti | 22 | 47.90 |
| Tungsten | W | 74 | 183.85 |
| Uranium | U | 92 | 238.03 |
| Vanadium | V | 23 | 50.942 |
| Xenon | Xe | 54 | 131.20 |
| Ytterbium | Yb | 70 | 173.04 |
| Yttrium | Y | 39 | 88.905 |
| Zinc | Zn | 30 | 65.37 |
| Zirconium | Zr | 40 | 91.22 |

*Value in brackets denotes the mass number of the isotope of longest known half life (or a better known one for Bk, Cf, Po, Pm, and Tc).

[a] Atomic weight varies because of natural variation in isotropic composition: B, ±0.003; C, ±0.00005; H, ±0.00001; O, ±0.0001; Sl, ±0.001; S, ±0.003.

[b] Atomic weight is believed to have following experimental uncertainty: Br, ±0.002; Cl, ±0.001; Cr, ±0.001; Fe, ±0.003; Ag, ±0.003. For other elements, the last digit given for the atomic weight is believed reliable to ±0.5. Lawrencium, Lw, has been proposed as the name for element No. 103, nuclidie mass about 257.



Copyright ASME International
Provided by IHS under license with ASME
No reproduction or networking permitted without license from IHS
Not for Resale

## FIG. K-6 COMBUSTION CONSTANTS

| No. | Substance | Formula | Molecular Weight | Lb per Cu Ft | Cu Ft per Lb | Sp Gr Air = 1.0000 | Heat of Combustion Btu per Cu Ft Gross (High) | Heat of Combustion Btu per Cu Ft Net (Low) | Heat of Combustion Btu per Lb Gross (High) | Heat of Combustion Btu per Lb Net (Low) | For 100% Total Air — Moles per mole of Combustible or Cu Ft per Cu Ft of Combustible — Required for Combustion $O_2$ | $N_2$ | Air | Flue Products $CO_2$ | $H_2O$ | $N_2$ | For 100% Total Air — Lb per Lb of Combustible — Required for Combustion $O_2$ | $N_2$ | Air | Flue Products $CO_2$ | $H_2O$ | $N_2$ |
|---|---|---|---|---|---|---|---|---|---|---|---|---|---|---|---|---|---|---|---|---|---|---|
| 1 | Carbon * | C | 12.01 | — | — | — | — | — | 14,093 | 25,094 | 1.0 | 3.76 | 4.76 | 1.0 | — | 3.76 | 2.66 | 8.86 | 11.53 | 3.66 | — | 8.86 |
| 2 | Hydrogen | $H_2$ | 2.016 | 0.0053 | 187.723 | 0.0696 | 325 | 275 | 61,095 | 51,623 | 0.5 | 1.88 | 2.38 | — | 1.0 | 1.88 | 7.94 | 26.41 | 34.34 | — | 8.94 | 26.41 |
| 3 | Oxygen | $O_2$ | 32.00 | 0.0846 | 11.819 | 1.1053 | — | — | — | — | — | — | — | — | — | — | — | — | — | — | — | — |
| 4 | Nitrogen (atm) | $N_2$ | 28.01 | 0.0744 | 13.443 | 0.9718 | — | — | — | — | — | — | — | — | — | — | — | — | — | — | — | — |
| 5 | Carbon monoxide | CO | 28.01 | 0.0740 | 13.506 | 0.9672 | 321 | 321 | 4,347 | 4,347 | 0.5 | 1.88 | 2.38 | 1.0 | — | 1.88 | 0.57 | 1.90 | 2.47 | 1.57 | — | 1.90 |
| 6 | Carbon Dioxide | $CO_2$ | 44.01 | 0.1170 | 8.548 | 1.5282 | — | — | — | — | — | — | — | — | — | — | — | — | — | — | — | — |
| | **Paraffin series** | | | | | | | | | | | | | | | | | | | | | |
| 7 | Methane | $CH_4$ | 16.04 | 0.0425 | 23.552 | 0.5543 | 1012 | 911 | 23,875 | 21,495 | 2.0 | 7.53 | 9.53 | 1.0 | 2.0 | 7.53 | 3.99 | 13.28 | 17.27 | 2.74 | 2.25 | 13.28 |
| 8 | Ethane | $C_2H_6$ | 30.07 | 0.0803 | 12.455 | 1.0488 | 1773 | 1622 | 22,323 | 20,418 | 3.5 | 13.18 | 16.68 | 2.0 | 3.0 | 13.18 | 3.73 | 12.39 | 16.12 | 2.93 | 1.80 | 12.39 |
| 9 | Propane | $C_3H_8$ | 44.09 | 0.1196 | 8.365 | 1.5617 | 2524 | 2322 | 21,669 | 19,937 | 5.0 | 18.82 | 23.82 | 3.0 | 4.0 | 18.82 | 3.63 | 12.07 | 15.70 | 2.99 | 1.63 | 12.07 |
| 10 | n-Butane | $C_4H_{10}$ | 58.12 | 0.1582 | 6.321 | 2.0665 | 3271 | 3018 | 21,321 | 19,678 | 6.5 | 24.47 | 30.97 | 4.0 | 5.0 | 24.47 | 3.58 | 11.91 | 15.49 | 3.03 | 1.55 | 11.91 |
| 11 | Isobutane | $C_4H_{10}$ | 58.12 | 0.1582 | 6.321 | 2.0665 | 3261 | 3009 | 21,271 | 19,628 | 6.5 | 24.47 | 30.97 | 4.0 | 5.0 | 24.47 | 3.58 | 11.91 | 15.49 | 3.03 | 1.55 | 11.91 |
| 12 | n-Pentane | $C_5H_{12}$ | 72.15 | 0.1904 | 5.252 | 2.4872 | 4020 | 3717 | 21,095 | 19,507 | 8.0 | 30.11 | 38.11 | 5.0 | 6.0 | 30.11 | 3.55 | 11.81 | 15.35 | 3.05 | 1.50 | 11.81 |
| 13 | Isopentane | $C_5H_{12}$ | 72.15 | 0.1904 | 5.252 | 2.4872 | 4011 | 3708 | 21,047 | 19,459 | 8.0 | 30.11 | 38.11 | 5.0 | 6.0 | 30.11 | 3.55 | 11.81 | 15.35 | 3.05 | 1.50 | 11.81 |
| 14 | Neopentane | $C_5H_{12}$ | 72.15 | 0.1904 | 5.252 | 2.4872 | 3994 | 3692 | 20,978 | 19,390 | 8.0 | 30.11 | 38.11 | 5.0 | 6.0 | 30.11 | 3.55 | 11.81 | 15.35 | 3.05 | 1.50 | 11.81 |
| 15 | n-Hexane | $C_6H_{14}$ | 86.17 | 0.2274 | 4.398 | 2.9704 | 4768 | 4415 | 20,966 | 19,415 | 9.5 | 35.76 | 45.26 | 6.0 | 7.0 | 35.76 | 3.53 | 11.74 | 15.27 | 3.06 | 1.46 | 11.74 |
| | **Olefin series** | | | | | | | | | | | | | | | | | | | | | |
| 16 | Ethylene | $C_2H_4$ | 28.05 | 0.0742 | 13.475 | 0.9740 | 1604 | 1503 | 21,636 | 20,275 | 3.0 | 11.29 | 14.29 | 2.0 | 2.0 | 11.29 | 3.42 | 11.39 | 14.81 | 3.14 | 1.29 | 11.39 |
| 17 | Propylene | $C_3H_6$ | 42.08 | 0.1110 | 9.007 | 1.4504 | 2340 | 2188 | 21,048 | 19,687 | 4.5 | 16.94 | 21.44 | 3.0 | 3.0 | 16.94 | 3.42 | 11.39 | 14.81 | 3.14 | 1.29 | 11.39 |
| 18 | n-Butene | $C_4H_8$ | 56.10 | 0.1480 | 6.756 | 1.9336 | 3084 | 2885 | 20,854 | 19,493 | 6.0 | 22.59 | 28.59 | 4.0 | 4.0 | 22.59 | 3.42 | 11.39 | 14.81 | 3.14 | 1.29 | 11.39 |
| 19 | Isobutene | $C_4H_8$ | 56.10 | 0.1480 | 6.756 | 1.9336 | 3069 | 2868 | 20,737 | 19,376 | 6.0 | 22.59 | 28.59 | 4.0 | 4.0 | 22.59 | 3.42 | 11.39 | 14.81 | 3.14 | 1.29 | 11.39 |
| 20 | n-Pentene | $C_5H_{10}$ | 70.13 | 0.1852 | 5.400 | 2.4190 | 3837 | 3585 | 20,720 | 19,359 | 7.5 | 28.23 | 35.73 | 5.0 | 5.0 | 28.23 | 3.42 | 11.39 | 14.81 | 3.14 | 1.29 | 11.39 |
| | **Aromatic series** | | | | | | | | | | | | | | | | | | | | | |
| 21 | Benzene | $C_6H_6$ | 78.11 | 0.2060 | 4.852 | 2.6920 | 3752 | 3601 | 18,184 | 17,451 | 7.5 | 28.23 | 35.73 | 6.0 | 3.0 | 28.23 | 3.07 | 10.22 | 13.30 | 3.38 | 0.69 | 10.22 |
| 22 | Toluene | $C_7H_8$ | 92.13 | 0.2431 | 4.113 | 3.1760 | 4486 | 4285 | 18,501 | 17,672 | 9.0 | 33.88 | 42.88 | 7.0 | 4.0 | 33.88 | 3.13 | 10.40 | 13.53 | 3.34 | 0.78 | 10.40 |
| 23 | Xylene | $C_8H_{10}$ | 106.16 | 0.2803 | 3.567 | 3.6618 | 5230 | 4980 | 18,650 | 17,760 | 10.5 | 39.52 | 50.02 | 8.0 | 5.0 | 39.52 | 3.17 | 10.53 | 13.70 | 3.32 | 0.85 | 10.53 |
| | **Miscellaneous gases** | | | | | | | | | | | | | | | | | | | | | |
| 24 | Acetylene | $C_2H_2$ | 26.04 | 0.0697 | 14.344 | 0.9107 | 1477 | 1426 | 21,502 | 20,769 | 2.5 | 9.41 | 11.91 | 2.0 | 1.0 | 9.41 | 3.07 | 10.22 | 13.30 | 3.38 | 0.69 | 10.22 |
| 25 | Naphthalene | $C_{10}H_8$ | 128.16 | 0.3384 | 2.955 | 4.4208 | 5854 | 5654 | 17,303 | 16,708 | 12.0 | 45.17 | 57.17 | 10.0 | 4.0 | 45.17 | 3.00 | 9.97 | 12.96 | 3.43 | 0.56 | 9.97 |
| 26 | Methyl alcohol | $CH_3OH$ | 32.04 | 0.0846 | 11.820 | 1.1052 | 868 | 767 | 10,258 | 9,066 | 1.5 | 5.65 | 7.15 | 1.0 | 2.0 | 5.65 | 1.50 | 4.98 | 6.48 | 1.37 | 1.13 | 4.98 |
| 27 | Ethyl alcohol | $C_2H_5OH$ | 46.07 | 0.1216 | 8.221 | 1.5890 | 1600 | 1449 | 13,161 | 11,917 | 3.0 | 11.29 | 14.29 | 2.0 | 3.0 | 11.29 | 2.08 | 6.93 | 9.02 | 1.92 | 1.17 | 6.93 |
| 28 | Ammonia | $NH_3$ | 17.03 | 0.0456 | 21.914 | 0.5961 | 441 | 364 | 9,667 | 7,985 | 0.75 | 2.82 | 3.57 | — | 1.5 | 3.32 | 1.41 | 4.69 | 6.10 | — | 1.59 | 5.51 |
| 29 | Sulfur * | S | 32.06 | — | — | — | — | — | 3,980 | 3,980 | 1.0 | 3.76 | 4.76 | 1.0 $SO_2$ | — | 3.76 | 1.00 | 3.29 | 4.29 | 2.00 $SO_2$ | — | 3.29 |
| 30 | Hydrogen sulfide | $H_2S$ | 34.08 | 0.0911 | 10.979 | 1.1898 | 646 | 595 | 7,097 | 6,537 | 1.5 | 5.65 | 7.15 | 1.0 | 1.0 | 5.65 | 1.41 | 4.69 | 6.10 | 1.88 | 0.53 | 4.69 |
| 31 | Sulfur dioxide | $SO_2$ | 64.06 | 0.1733 | 5.770 | 2.2640 | — | — | — | — | — | — | — | — | — | — | — | — | — | — | — | — |
| 32 | Water vapor | $H_2O$ | 18.02 | 0.0476 | 21.017 | 0.6215 | — | — | — | — | — | — | — | — | — | — | — | — | — | — | — | — |
| 33 | Air | — | — | 0.0766 | 13.063 | 1.0000 | — | — | — | — | — | — | — | — | — | — | — | — | — | — | — | — |

*Carbon and sulfur are considered as gases for molal calculations only.

All gas volumes corrected to 60°F and 30 in. Hg dry.

Note: This table is included by courtesy of the American Gas Association and the Industrial Press. The format and data are taken principally from "Fuel Flue Gases," 1941 Edition, American Gas Association, with modifications, especially in the four columns labeled "Heat of Combustion," using data from "Gas Engineers Handbook, The Industrial Press, 1965."



Copyright ASME International
Provided by IHS under license with ASME
No reproduction or networking permitted without license from IHS

Not for Resale

## FIG. K-7 TEMPERATURE CONVERSION TABLE

°C to °F – Use center column to right column
°F to °C – Use center column to left column

| -60° to + 59° | | | 60° to 330° | | | 340° to 990° | | | 1000° to 1600° | | | 1670° to 2330° | | | 2340° to 3000° | | |
|---|---|---|---|---|---|---|---|---|---|---|---|---|---|---|---|---|---|
| C | | F | C | | F | C | | F | C | | F | C | | F | C | | F |
| -51 | -60 | -76 | 15.6 | 60 | 140.0 | 171 | 340 | 644 | 538 | 1000 | 1832 | 909 | 1670 | 3038 | 1281 | 2340 | 4244 |
| -46 | -50 | -58 | 16.1 | 61 | 141.8 | 177 | 350 | 662 | 543 | 1010 | 1850 | 926 | 1680 | 3056 | 1286 | 2350 | 4262 |
| -40 | -40 | -40 | 16.6 | 62 | 143.6 | 182 | 360 | 680 | 549 | 1020 | 1868 | 920 | 1690 | 3074 | 1292 | 2360 | 4280 |
| -34 | -30 | -22 | 17.1 | 63 | 145.4 | 188 | 370 | 698 | 554 | 1030 | 1886 | 926 | 1700 | 3092 | 1297 | 2370 | 4298 |
| -29 | -20 | -4 | 17.7 | 64 | 147.2 | 193 | 380 | 716 | 560 | 1040 | 1904 | 931 | 1710 | 3110 | 1303 | 2380 | 4316 |
| -23 | -10 | 14 | 18.2 | 65 | 149.0 | 199 | 390 | 734 | 565 | 1050 | 1922 | 937 | 1720 | 3128 | 1308 | 2390 | 4334 |
| -17.7 | 0 | 32 | 18.8 | 66 | 150.8 | 204 | 400 | 752 | 571 | 1060 | 1940 | 942 | 1730 | 3146 | 1315 | 2400 | 4352 |
| -17.2 | 1 | 33.8 | 19.3 | 67 | 152.6 | 210 | 410 | 770 | 576 | 1070 | 1958 | 948 | 1740 | 3164 | 1320 | 2410 | 4370 |
| -16.2 | 2 | 35.6 | 19.9 | 68 | 154.4 | 215 | 420 | 788 | 582 | 1080 | 1976 | 953 | 1750 | 3182 | 1326 | 2420 | 4388 |
| -16.1 | 3 | 37.4 | 20.4 | 69 | 156.2 | 221 | 430 | 806 | 587 | 1090 | 1994 | 959 | 1760 | 3200 | 1331 | 2430 | 4006 |
| -15.5 | 4 | 39.2 | 21.0 | 70 | 158.0 | 226 | 440 | 824 | 593 | 1100 | 2012 | 964 | 1770 | 3218 | 1337 | 2440 | 4424 |
| -15.0 | 5 | 41.0 | 21.5 | 71 | 159.8 | 232 | 450 | 842 | 598 | 1110 | 2030 | 970 | 1780 | 3236 | 1342 | 2450 | 4442 |
| -14.4 | 6 | 42.8 | 22.2 | 72 | 161.6 | 238 | 460 | 860 | 604 | 1120 | 2048 | 975 | 1790 | 3254 | 1348 | 2460 | 4460 |
| -13.9 | 7 | 44.6 | 22.7 | 73 | 163.4 | 243 | 470 | 878 | 609 | 1130 | 2066 | 981 | 1800 | 3272 | 1353 | 2470 | 4478 |
| -13.3 | 8 | 46.4 | 23.3 | 74 | 165.2 | 249 | 480 | 896 | 615 | 1140 | 2084 | 986 | 1810 | 3290 | 1359 | 2480 | 4496 |
| -12.7 | 9 | 48.2 | 23.8 | 75 | 167.0 | 254 | 490 | 914 | 620 | 1150 | 2102 | 992 | 1820 | 3308 | 1364 | 2490 | 4514 |
| -12.2 | 10 | 50.0 | 24.4 | 76 | 168.8 | 260 | 500 | 932 | 626 | 1160 | 2120 | 997 | 1830 | 3326 | 1371 | 2500 | 4532 |
| -11.6 | 11 | 51.8 | 26.0 | 77 | 170.6 | 265 | 510 | 950 | 631 | 1170 | 2138 | 1003 | 1840 | 3344 | 1376 | 2510 | 4550 |
| -11.1 | 12 | 53.6 | 25.5 | 78 | 172.4 | 271 | 520 | 968 | 637 | 1180 | 2156 | 1008 | 1850 | 3362 | 1382 | 2520 | 4568 |
| -10.5 | 13 | 55.4 | 26.2 | 79 | 174.2 | 276 | 530 | 986 | 642 | 1190 | 2174 | 1014 | 1860 | 3380 | 1387 | 2530 | 4586 |
| -10.0 | 14 | 57.2 | 26.8 | 80 | 176.0 | 282 | 540 | 1004 | 648 | 1200 | 2192 | 1019 | 1870 | 3398 | 1393 | 2540 | 4604 |
| -9.4 | 15 | 59.0 | 27.3 | 81 | 177.8 | 288 | 550 | 1022 | 653 | 1210 | 2210 | 1025 | 1880 | 3416 | 1398 | 2550 | 4622 |
| -8.8 | 16 | 60.8 | 27.7 | 82 | 179.6 | 293 | 560 | 1040 | 659 | 1220 | 2228 | 1030 | 1890 | 3434 | 1404 | 2560 | 4640 |
| -8.3 | 17 | 62.6 | 28.2 | 83 | 181.4 | 299 | 570 | 1058 | 664 | 1230 | 2246 | 1036 | 1900 | 3452 | 1409 | 2570 | 4658 |
| -7.7 | 18 | 64.4 | 28.8 | 84 | 183.2 | 304 | 580 | 1076 | 670 | 1240 | 2264 | 1041 | 1910 | 3470 | 1415 | 2580 | 4676 |
| -7.2 | 19 | 66.2 | 29.3 | 85 | 185.0 | 310 | 590 | 1094 | 675 | 1250 | 2282 | 1047 | 1920 | 3488 | 1420 | 2590 | 4694 |
| -6.6 | 20 | 68.0 | 29.9 | 86 | 186.8 | 315 | 600 | 1112 | 681 | 1260 | 2300 | 1052 | 1930 | 3506 | 1427 | 2600 | 4712 |
| -6.1 | 21 | 69.8 | 30.4 | 87 | 188.6 | 321 | 610 | 1130 | 686 | 1270 | 2318 | 1058 | 1940 | 3524 | 1432 | 2610 | 4730 |
| -5.5 | 22 | 71.6 | 31.0 | 88 | 190.4 | 326 | 620 | 1148 | 692 | 1280 | 2336 | 1063 | 1950 | 3542 | 1438 | 2620 | 4748 |
| -5.0 | 23 | 73.4 | 31.5 | 89 | 192.2 | 332 | 630 | 1166 | 697 | 1290 | 2354 | 1069 | 1960 | 3560 | 1443 | 2630 | 4766 |
| -4.4 | 24 | 75.2 | 32.1 | 90 | 194.0 | 338 | 640 | 1184 | 704 | 1300 | 2372 | 1074 | 1970 | 3578 | 1449 | 2640 | 4784 |
| -3.9 | 25 | 77.0 | 32.6 | 91 | 195.8 | 343 | 650 | 1202 | 708 | 1310 | 2390 | 1080 | 1980 | 3596 | 1454 | 2650 | 4802 |
| -3.3 | 26 | 78.8 | 33.3 | 92 | 197.6 | 349 | 660 | 1220 | 715 | 1320 | 2408 | 1085 | 1990 | 3614 | 1460 | 2660 | 4820 |
| -2.8 | 27 | 80.6 | 33.8 | 93 | 199.4 | 354 | 670 | 1238 | 719 | 1330 | 2426 | 1093 | 2000 | 3632 | 1465 | 2670 | 4838 |
| -2.2 | 28 | 82.4 | 34.4 | 94 | 201.2 | 360 | 680 | 1256 | 726 | 1340 | 2444 | 1098 | 2010 | 3650 | 1471 | 2680 | 4856 |
| -1.6 | 29 | 84.2 | 34.9 | 95 | 203.0 | 365 | 690 | 1274 | 734 | 1350 | 2462 | 1104 | 2020 | 3668 | 1476 | 2690 | 4874 |
| -1.1 | 30 | 86.0 | 35.5 | 96 | 204.8 | 371 | 700 | 1292 | 737 | 1360 | 2480 | 1109 | 2030 | 3686 | 1483 | 2700 | 4892 |
| -.6 | 31 | 87.8 | 36.1 | 97 | 206.6 | 376 | 710 | 1310 | 741 | 1370 | 2498 | 1115 | 2040 | 3704 | 1488 | 2710 | 4910 |
| 0 | 32 | 89.6 | 36.6 | 98 | 208.4 | 382 | 720 | 1328 | 748 | 1380 | 2516 | 1120 | 2050 | 3722 | 1494 | 2720 | 4928 |
| .5 | 33 | 91.4 | 37.1 | 99 | 210.2 | 387 | 730 | 1346 | 752 | 1390 | 2534 | 1126 | 2060 | 3740 | 1499 | 2730 | 4946 |
| 1.1 | 34 | 93.2 | 37.7 | 100 | 212.0 | 393 | 740 | 1364 | 760 | 1400 | 2552 | 1131 | 2070 | 3758 | 1505 | 2740 | 4958 |
| 1.6 | 35 | 95.0 | 38 | 100 | 212 | 399 | 750 | 1382 | 765 | 1410 | 2570 | 1137 | 2080 | 3776 | 1510 | 2750 | 4982 |
| 2.2 | 36 | 96.8 | 43 | 110 | 230 | 404 | 760 | 1400 | 771 | 1420 | 2588 | 1142 | 2090 | 3794 | 1516 | 2760 | 5000 |
| 2.7 | 37 | 98.6 | 49 | 120 | 248 | 410 | 770 | 1418 | 776 | 1430 | 2606 | 1149 | 2100 | 3812 | 1521 | 2770 | 5018 |
| 3.3 | 38 | 100.4 | 54 | 130 | 266 | 415 | 780 | 1436 | 782 | 1440 | 2624 | 1154 | 2110 | 3830 | 1527 | 2780 | 5036 |
| 3.8 | 39 | 102.2 | 60 | 140 | 284 | 421 | 790 | 1454 | 787 | 1450 | 2642 | 1160 | 2120 | 3848 | 1532 | 2790 | 5054 |
| 4.4 | 40 | 104.0 | 65 | 150 | 302 | 426 | 800 | 1472 | 793 | 1460 | 2660 | 1165 | 2130 | 3866 | 1538 | 2800 | 5072 |
| 4.9 | 41 | 105.8 | 71 | 160 | 320 | 432 | 810 | 1490 | 798 | 1470 | 2678 | 1171 | 2140 | 3884 | 1543 | 2810 | 5090 |
| 5.5 | 42 | 107.6 | 76 | 170 | 338 | 438 | 820 | 1508 | 804 | 1480 | 2696 | 1176 | 2150 | 3902 | 1549 | 2820 | 5108 |
| 6.0 | 43 | 109.4 | 83 | 180 | 356 | 443 | 830 | 1526 | 809 | 1490 | 2714 | 1182 | 2160 | 3920 | 1554 | 2830 | 5126 |
| 6.6 | 44 | 111.2 | 88 | 190 | 374 | 449 | 840 | 1544 | 815 | 1500 | 2732 | 1187 | 2170 | 3938 | 1560 | 2840 | 5144 |
| 7.1 | 45 | 113.0 | 93 | 200 | 392 | 454 | 850 | 1562 | 820 | 1510 | 2750 | 1193 | 2180 | 3956 | 1565 | 2850 | 5162 |
| 7.7 | 46 | 114.8 | 99 | 210 | 410 | 460 | 860 | 1580 | 827 | 1520 | 2768 | 1198 | 2190 | 3974 | 1571 | 2860 | 5180 |
| 8.2 | 47 | 116.6 | 100 | 212 | 413 | 465 | 870 | 1598 | 831 | 1530 | 2786 | 1204 | 2200 | 3992 | 1576 | 2870 | 5198 |
| 8.8 | 48 | 118.4 | 104 | 220 | 428 | 471 | 880 | 1616 | 842 | 1550 | 2822 | 1209 | 2210 | 4010 | 1582 | 2880 | 5216 |
| 9.3 | 49 | 120.2 | 110 | 230 | 446 | 476 | 890 | 1634 | 849 | 1560 | 2840 | 1220 | 2230 | 4046 | 1593 | 2900 | 5252 |
| 9.9 | 50 | 122.0 | 115 | 240 | 464 | 482 | 900 | 1652 | 853 | 1570 | 2858 | 1226 | 2240 | 4064 | 1598 | 2910 | 5270 |
| 10.4 | 51 | 123.8 | 121 | 250 | 482 | 487 | 910 | 1670 | 860 | 1580 | 2876 | 1231 | 2250 | 4082 | 1604 | 2920 | 5288 |
| 11.1 | 52 | 125.6 | 127 | 260 | 500 | 493 | 920 | 1688 | 864 | 1590 | 2894 | 1237 | 2260 | 4100 | 1609 | 2930 | 5306 |
| 11.5 | 53 | 127.4 | 132 | 270 | 518 | 498 | 930 | 1706 | 871 | 1600 | 2912 | 1242 | 2270 | 4118 | 1615 | 2940 | 5324 |
| 12.1 | 54 | 129.2 | 138 | 280 | 536 | 504 | 940 | 1724 | 876 | 1610 | 2930 | 1248 | 2280 | 4136 | 1620 | 2950 | 5342 |
| 12.6 | 55 | 131.0 | 143 | 290 | 554 | 510 | 950 | 1742 | 882 | 1620 | 2948 | 1253 | 2290 | 4154 | 1626 | 2960 | 5360 |
| 13.2 | 56 | 132.8 | 149 | 300 | 572 | 515 | 960 | 1760 | 887 | 1630 | 2966 | 1259 | 2300 | 4172 | 1631 | 2970 | 5378 |
| 13.7 | 57 | 134.6 | 154 | 310 | 590 | 520 | 970 | 1778 | 893 | 1640 | 2984 | 1264 | 2310 | 4190 | 1637 | 2980 | 5396 |
| 14.3 | 58 | 136.4 | 160 | 320 | 608 | 526 | 980 | 1796 | 898 | 1650 | 3002 | 1270 | 2320 | 4208 | 1642 | 2990 | 5414 |
| 14.8 | 59 | 138.2 | 165 | 330 | 626 | 532 | 990 | 1814 | 904 | 1660 | 3020 | 1275 | 2330 | 4226 | 1649 | 3000 | 5432 |



Copyright ASME International
Provided by IHS under license with ASME
No reproduction or networking permitted without license from IHS

Not for Resale

FIG. K-8 CONVERSION FACTORS — GAS FLOW RATES

| Given Units \ Desired Units | $\frac{M^3}{sec}$ | $\frac{M^3}{min}$ | $\frac{M^3}{hr}$ | $\frac{ft^3}{sec}$ | $\frac{ft^3}{min}$ | $\frac{ft^3}{hr}$ | $\frac{L}{sec}$ | $\frac{L}{min}$ | $\frac{cm^3}{sec}$ | $\frac{cm^3}{min}$ |
|---|---|---|---|---|---|---|---|---|---|---|
| $\frac{M^3}{sec}$ | 1 | 60 | 3600 | 35.3144 | $21.1887 \times 10^2$ | $12.7132 \times 10^4$ | 999.973 | $59.998 \times 10^3$ | $1 \times 10^6$ | $6 \times 10^7$ |
| $\frac{M^3}{min}$ | 0.0167 | 1 | 60 | 0.5886 | 35.3144 | $21.189 \times 10^2$ | 16.667 | 999.973 | $16.667 \times 10^3$ | $1 \times 10^6$ |
| $\frac{M^3}{hr}$ | $2.778 \times 10^{-5}$ | $16.667 \times 10^{-3}$ | 1 | $98.90 \times 10^{-4}$ | 0.5886 | 35.3144 | $27.777 \times 10^{-2}$ | 16.667 | $2.777 \times 10^2$ | $1.666 \times 10^4$ |
| $\frac{ft^3}{sec}$ | $28.317 \times 10^{-3}$ | 1.699 | 101.94 | 1 | 60 | 3600 | 28.316 | $16.9896 \times 10^2$ | $2.8317 \times 10^4$ | $1.699 \times 10^6$ |
| $\frac{ft^3}{min}$ | $4.7195 \times 10^{-4}$ | $28.317 \times 10^{-3}$ | 1.699 | $16.667 \times 10^{-3}$ | 1 | 60 | $47.193 \times 10^{-2}$ | 28.316 | $4.7195 \times 10^2$ | 2.8317 |
| $\frac{ft^3}{hr}$ | $7.8658 \times 10^{-6}$ | $4.7195 \times 10^{-4}$ | $28.317 \times 10^{-3}$ | $2.778 \times 10^{-4}$ | $16.667 \times 10^{-3}$ | 1 | $7.866 \times 10^{-3}$ | 0.4719 | 78.658 | $4.7195 \times 10^2$ |
| $\frac{L}{sec}$ | $1.000027 \times 10^{-3}$ | $6.00016 \times 10^{-2}$ | 3.6 | $35.316 \times 10^{-3}$ | 2.11896 | 127.138 | 1 | 60 | 1000.027 | 16.667 |
| $\frac{L}{min}$ | $1.6667 \times 10^{-5}$ | $1.000027 \times 10^{-3}$ | $6.00016 \times 10^2$ | $5.886 \times 10^{-4}$ | $35.316 \times 10^{-3}$ | 2.11896 | $1.6667 \times 10^{-2}$ | 1 | 16.667 | 1000.027 |
| $\frac{cm^3}{sec}$ | $1 \times 10^{-6}$ | $6 \times 10^{-5}$ | $3.6 \times 10^{-3}$ | $3.5314 \times 10^{-5}$ | $2.1189 \times 10^{-3}$ | $1.271 \times 10^{-3}$ | $9.99973 \times 10^{-4}$ | $5.9998 \times 10^{-2}$ | 1 | $16.667 \times 10^{-3}$ |
| $\frac{cm^3}{min}$ | $1.6667 \times 10^{-8}$ | $1 \times 10^{-6}$ | $6 \times 10^{-5}$ | $5.886 \times 10^{-7}$ | $0.3531 \times 10^{-4}$ | $2.11887 \times 10^{-3}$ | $5.9998 \times 10^{-2}$ | $9.99973 \times 10^{-4}$ | 60 | 1 |

To convert a value from a given unit to a desired unit, multiply the given value by the factor opposite the given units and beneath the desired unit.



Copyright ASME International
Provided by IHS under license with ASME
No reproduction or networking permitted without license from IHS
Not for Resale

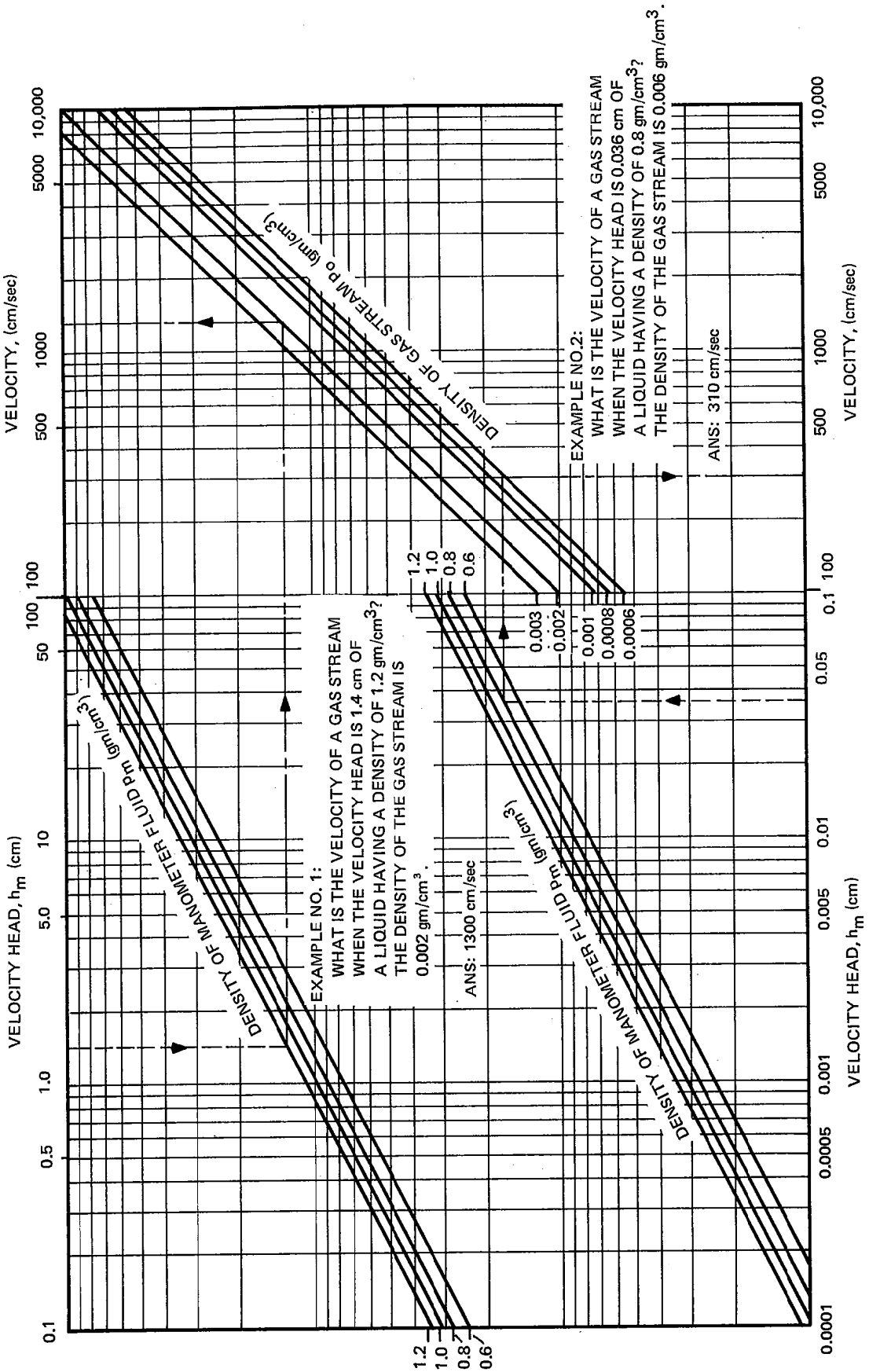


FIG. K-9 RELATIONSHIP BETWEEN VELOCITY HEAD AND VELOCITY



Not for Resale

Copyright ASME International
Provided by IHS under license with ASME
No reproduction or networking permitted without license from IHS

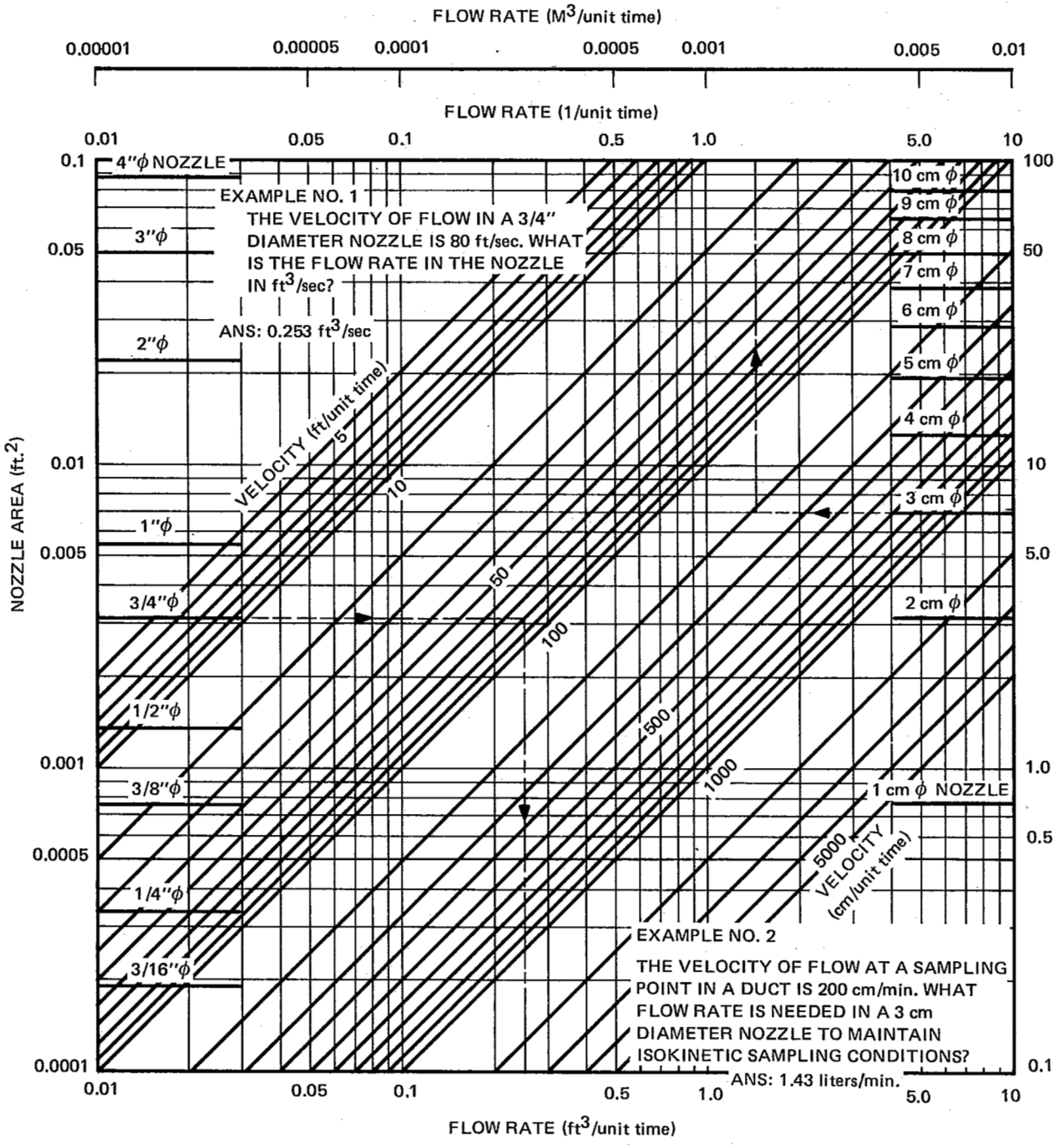


FIG. K-10 RELATIONSHIP BETWEEN NOZZLE SIZE AND FLOW RATE



Copyright ASME International
Provided by IHS under license with ASME
No reproduction or networking permitted without license from IHS

Not for Resale

ASME PTC*38 80 ■ 0759670 0053917 6 ■



# APPENDIX L

## SI SYSTEM FOR UNITS OF MEASUREMENT

The following material is excerpted from ASME Guide SI-1 "Orientation and Guide for Use of SI (Metric) Units" (Reference [11]).

**ASME Guide SI-1**

# ASME
# Orientation and Guide for Use of SI (Metric) Units

Eighth Edition
March 15, 1978

### SECTION 1. BACKGROUND AND POLICY

The 1967 Regional Administrative Conference passed the following resolution: "Form a working committee to propose and implement constructive solutions to problems associated with conversion to the metric system."

In 1968 a Special Committee on Metric Study was established by the Council of ASME. This committee has held a series of meetings which culminated in the following Council policy:

1. 1970—The ASME anticipates the displacement of the usage of U.S. customary units by the usage of SI* (metric) units in many fields.
2. 1970—The ASME believes that both U.S. customary and the SI systems of units, modules, sizes, ratings, etc., will continue in use in the foreseeable future.
3. 1970—Because of the increasing international commitment of U.S. engineering and U.S. industry and commerce, the ASME recognizes the need for an accelerated growth in the capability in and between both systems by the mechanical engineering profession.
4. 1970—The ASME will encourage and assist the development of this "dual capability" by specific and positive actions, including the following:
   (a) Contribute to the continuing development of the International System, particularly to meet engineering requirements.
   (b) Develop and disseminate data to facilitate conversion and insure correspondence between the U.S. customary and SI.
   (c) Provide and promote education in the fundamentals and application of both systems.
   (d) Encourage and guide the use or inclusion of SI units as appropriate in Codes and Standards and other ASME publications.

*International System



Copyright ASME International
Provided by IHS under license with ASME
No reproduction or networking permitted without license from IHS
Not for Resale

(e) Work with ANSI to develop and implement U.S. national policies regarding international standardization.

5. 1970—The ASME will continue to support the National Bureau of Standards of the Department of Commerce in its "Metric Study," pursuant to Public Law 90-472. Its membership will be kept informed of all significant NBS actions.
6. 1972—For the purpose of moving forward the ASME will maintain close liaison with legislative activities concerned with increased use of the International Metric System (SI).
7. 1973—The Society encourages the initiation of a coordinating voluntary national program of conversion to SI usage.
8. 1973—As of July 1, 1974, SI units (in addition to any other units) will be required in ASME papers and in revised, reaffirmed and new engineering standards.
9. 1974—The ASME will cooperate fully with the American National Metric Council (ANMC), and other societies and agencies to minimize duplication of effort.
10. 1977—SI units shall be included in standards at the appropriate time as determined by industry, government, public and society needs consistent with national plans for coordinating and managing development of SI standards.

The ASME Metric Study Committee maintains contact with the National Bureau of Standards and various technical societies involved in the change to SI and has developed educational material and reports to the membership. The committee also developed society positions on metric legislation. The U.S. Metric Study Report was submitted to Congress for study and implementation in July, 1971. This report recognized that "engineering standards have served as a keystone in our domestic industrial development, as they have in other industrialized nations." It notes that only a small portion of U.S. standards are coordinated by the American National Standards Institute (ANSI) which represents the U.S. on the International Electrotechnical Commission (IEC) and in the International Organization for Standards (ISO). Many IEC and ISO recommendations are not compatible with U.S. Standards. The report further states: "If U.S. practices are to be reflected in international recommendations, active participation on the drafting committee is essential." With the trend to use the International System of Units "further national standards which do not include SI units are not likely to receive due consideration in the development of international standards."

Since dimensional specifications in different metric countries are incompatible as frequently as those in countries using the inch unit for measurement "a change to SI does not by itself make standards compatible." The report continues, "a few dimensional specifications based on the inch and U.S. engineering practices are used internationally and have been incorporated in IEC and ISO recommendations. Likewise, there are a few specifications based on metric units used throughout the world including the U.S." The report states that a change in both metric and nonmetric countries is required to achieve international standardization. A review of practices incorporated in standards could result in new practices and standards "which will conserve raw materials, improve the quality of products and reduce costs."

ASME is a charter subscriber to the American National Metric Council and several members of the ASME Metric Study Committee serve or have served on the ANMC Board of Directors, Metric Practice Committee, and sector committees.



Copyright ASME International
Provided by IHS under license with ASME
No reproduction or networking permitted without license from IHS

Not for Resale

## SECTION 2. HISTORY OF THE INTERNATIONAL SYSTEM

As our technology grew in the nineteenth century, it became apparent there was a great need for international standardization and improvements in the accuracy of standards for units of length and mass. As a result, in 1872 an international meeting was held in France and was attended by representatives of 26 countries including the United States. Out of this meeting came the international treaty, the Metric Convention, which was signed by 17 countries including the United States in 1875. The treaty:

(a) Set up metric standards for length and mass.

(b) Established the International Bureau of Weights and Measures (abbreviated from the French as BIPM:—PM for French "Poids et mesures" meaning "weights and measures").

(c) Established the General Conference of Weights and Measures (CGPM) which meets every six years.

(d) Set up an International Committee of Weights and Measures (CIPM) which meets every two years and which implements the recommendations of the General Conference and directs the activities of the International Bureau. The 1960 meeting of CGPM consisting then of 40 members, modernized the metric system. This revision is the International System of Units (SI)*. The expression used hereafter "SI Units," "SI Prefixes" and "supplementary units" are the results of Recommendation 1 (1960) of the CIPM. The sixth base unit listed in Table 1 was proposed as a Resolution by CIPM in 1969 and was adopted by the 14th CGPM in 1971.

## SECTION 3. SI BASE UNITS

(a) Unit of length is the meter** which is the length equal to 1 650 763.73 wavelengths in vacuum of the radiation corresponding to the transition between levels $2p_{10}$ and $5d_5$ of the krypton-86 atom. (In conformance with SI practice the number of wavelengths is written in groups of three digits *without* commas.)

(b) Unit of mass is the kilogram which is equal to the mass of the international prototype of the kilogram, located at the BIPM headquarters.

(c) Unit of time is the second which is the duration of 9 192 631 770 periods of the radiation corresponding to the transition between the two hyperfine levels of the ground state of the cesium-133 atom.

(d) Unit of electric current is the ampere which is that constant current which, if maintained in two straight parallel conductors of infinite length, of negligible circular cross section, and placed 1 meter apart in vacuum, would produce between these conductors a force equal to $2 \times 10^{-7}$ newton per meter of length (newton is a derived unit).

(e) Unit of thermodynamic temperature is the kelvin which is the fraction 1/273.16 of the thermodynamic temperature of the triple point of water. The SI unit of temperature is the kelvin. The Celsius temperature scale

*"Le Système International d'Unités," 1970, OFFILIB, 48 rue Gay-Lussac, F. 75 Paris 5 (revised edition 1972).

**Meter—This is the spelling recommended by the ASME Metric Study Committee for use in ASME publications. The alternate spelling, "metre," may be used at the discretion of the author.



Copyright ASME International
Provided by IHS under license with ASME
No reproduction or networking permitted without license from IHS
Not for Resale

(previously called Centigrade) is the commonly used scale for temperature measurements, except for some scientific work where the thermodynamic scale is used. The Celsius scale is not in itself part of SI, but a difference of one degree on that scale equals one kelvin. Zero on the thermodynamic scale is 273.15 kelvin below zero degrees Celsius. The degree symbol is associated with Celsius temperature (to avoid confusion with the unit C for coulomb) but not with the kelvin. Thus 20°C = 293.15 K on the thermodynamic scale but a temperature difference of 1°C = 1 K.

(f) Unit of substance is the mole which is the amount of substance of a system which contains as many elementary entities as there are atoms in 0.012 kilogram of carbon 12.

(g) Unit of luminous intensity is the candela which is the luminous intensity, in the perpendicular direction, of a surface of 1/600 000 square meter of a blackbody at the temperature of freezing platinum under a pressure 101 325 newtons per square meter.

The symbols for these base units are given in Table 1. *Note* that symbols are never pluralized, are never written with a period, and the practice with respect to upper and lower case modes must be followed without exception.

Refer to ANSI X3.50 or ISO 2955 for proper symbols for use in limited character sets (availability of only upper case letters or only lower case letters).

**TABLE 1—SI BASE UNITS[1]**

| Quantity | Unit Name | Unit Symbol* |
|---|---|---|
| Length | meter | m |
| Mass | kilogram** | kg |
| Time | second | s |
| Electric current | ampere | A |
| Thermodynamic temperature | kelvin | K |
| Amount of matter | mole | mol |
| Luminous intensity | candela | cd |

[1] Special Publication 330, p. 6, National Bureau of Standards.
*In general, roman (upright type) lower case is used for symbols of units; however, if the symbols are derived from proper names, capital roman type is used for the first letter.
**The kilogram is the only base unit with a prefix.

## SECTION 4. SUPPLEMENTARY UNITS

The General Conference has not yet classified certain units of the International System under either base units or derived units. These SI units are assigned to the third class called "supplementary units" and may be regarded either as base units or as derived units.

The two supplementary units are the radian for plane angle (symbol rad) and the steradian for solid angle (symbol sr).

## SECTION 5. PREFIXES

Decimal multiples and submultiples of the SI units are formed by means of the prefixes detailed in Table 2 on next page. Only one multiplying prefix is applied at one time to a given unit, e.g., nanometer (nm), not millimicrometer (m$\mu$m).



Copyright ASME International
Provided by IHS under license with ASME
No reproduction or networking permitted without license from IHS
Not for Resale

**TABLE 2–SI UNIT PREFIXES**

| Amount | Multiples and Submultiples | Prefixes | Symbols | Pronounciations | Means |
|---|---|---|---|---|---|
| 1 000 000 000 000 000 000 | $10^{18}$ | exa | E | ex'a | One quintillion times |
| 1 000 000 000 000 000 | $10^{15}$ | peta | P | pet'a | One quadrillion times |
| 1 000 000 000 000 | $10^{12}$ | tera | T | tĕr'ä | One trillion times |
| 1 000 000 000 | $10^{9}$ | giga | G | jĭ'ga | One billion times |
| 1 000 000 | $10^{6}$ | mega | M* | mĕg'ä | One million times |
| 1 000 | $10^{3}$ | kilo | k* | kil'o | One thousand times |
| 100 | $10^{2}$ | hecto | h | hĕk'tō | One hundred times |
| 10 | 10 | deka | da | dĕk'ä | Ten times |
| 0.1 | $10^{-1}$ | deci | d | dĕs'ĭ | One tenth of |
| 0.01 | $10^{-2}$ | centi | c | sĕn'tĭ | One hundredth of |
| 0.001 | $10^{-3}$ | milli | m* | mĭl'ĭ | One thousandth of |
| 0.000 001 | $10^{-6}$ | micro | $\mu$* | mī'krō | One millionth of |
| 0.000 000 001 | $10^{-9}$ | nano | n | năn'ō | One billionth of |
| 0.000 000 000 001 | $10^{-12}$ | pico | p | pē'cō | One trillionth of |
| 0.000 000 000 000 001 | $10^{-15}$ | femto | f | fĕm'tō | One quadrillionth of |
| 0.000 000 000 000 000 001 | $10^{-18}$ | atto | a | ăt'tō | One quintillionth of |

*Most commonly used.





Copyright ASME International
Provided by IHS under license with ASME
No reproduction or networking permitted without license from IHS

Not for Resale

The symbol of a prefix is considered to be combined with the unit symbol to which it is directly attached, forming with it a new unit symbol which can be raised to a positive or negative power and which can be combined with other unit symbols to form symbols for compound units.

Examples:

$1\ mm^3 = (10^{-3}\ m)^3 = 10^{-9}\ m^3$

$1\ ns^{-1} = (10^{-9}\ s)^{-1} = 10^{9}\ s^{-1}$

$1\ mm^2/s = (10^{-3}\ m)^2/s = 10^{-6}\ m^2/s$

When expressing a quantity by a numerical value and a specific unit, it is desirable in most applications to select a multiple or submultiple of the unit which results in a numerical value between 0.1 and 1000.

It is desirable, however, to carry the multiples and sub-multiples to greater or smaller numerical values where the predominant usage is dictated by this rule, e.g., mechanical design uses: mm.

Example:

7950 mm instead of 7.950 m

Note: In text and tables, if a numerical value is less than one, a zero shall precede the decimal point.

The use of prefixes representing 10 raised to a power which is a multiple of 3 is especially recommended in ISO 1000. The use of prefixes in the denominator of derived units should be avoided.

## SECTION 6. DERIVED UNITS

Units coherently derived from SI base units are given by algebraic expressions in the form of powers of the SI base units with a numerical factor equal to unity.

**TABLE 3–DERIVED UNITS WITH NAMES**

| Quantity | Name | Symbol | Formula | Expression in Terms of SI Base Units |
|---|---|---|---|---|
| Frequency | hertz | Hz | 1/s or $s^{-1}$ | $s^{-1}$ |
| Force | newton | N | $m \cdot kg \cdot s^{-2}$ | $m \cdot kg \cdot s^{-2}$ |
| Energy, work | joule | J | $N \cdot m$ | $m^2 \cdot kg \cdot s^{-2}$ |
| Power | watt | W | J/s | $m^2 \cdot kg \cdot s^{-3}$ |
| Electric charge | coulomb | C | $A \cdot s$ | $A \cdot s$ |
| Electric potential | volt | V | W/A | $m^2 \cdot kg \cdot s^{-3} \cdot A^{-1}$ |
| Electric resistance | ohm | Ω | V/A | $m^2 \cdot kg \cdot s^{-3} \cdot A^{-2}$ |
| Electric capacitance | farad | F | C/V | $m^{-2} \cdot kg^{-1} \cdot s^4 \cdot A^2$ |
| Magnetic flux | weber | Wb | $V \cdot s$ | $m^2 \cdot kg \cdot s^{-2} \cdot A^{-1}$ |
| Pressure or stress* | pascal | Pa | $N/m^2$ | $m^{-1} \cdot kg \cdot s^{-2}$ |
| Conductance | siemens | S | A/V | $m^{-2} \cdot kg^{-1} \cdot s^3 \cdot A^2$ |
| Magnetic flux density | tesla | T | $Wb/m^2$ | $kg \cdot s^{-2} \cdot A^{-1}$ |
| Inductance | henry | H | Wb/A | $m^2 \cdot kg \cdot s^{-2} \cdot A^{-2}$ |
| Luminous flux | lumen | lm | $cd \cdot sr$ | $cd \cdot sr$ |
| Illuminance | lux | lx | $lm/m^2$ | $m^{-2} \cdot cd \cdot sr$ |

*Care should be taken to differentiate between absolute and gage pressure where this is important. Thus add the word which applies (not the abbreviation) immediately after the unit name or symbol.



Copyright ASME International
Provided by IHS under license with ASME
No reproduction or networking permitted without license from IHS
Not for Resale

When two or more units expressed in base units are multiplied or divided as required to obtain derived quantities, the result is a unit value. No numerical constant is introduced. Such units are called "coherent." Table 3 lists these derived units together with formulas and symbols. Note that each unit is spelled with a lower-case first letter except if it occurs at the beginning of a sentence. The symbol is then capitalized. If the unit is named for an individual, the first letter of the symbol is capitalized; otherwise, the symbol is lower case.

Table 4 lists some derived units without names. Units not shown should be derived from approved units; e.g., the proper units for mass per unit time is kg/s.

**TABLE 4—SOME DERIVED UNITS WITHOUT NAMES**

| Quantity | Unit | Formula |
|---|---|---|
| Velocity-linear | meter per second | m/s |
| Acceleration-linear | meter per second per second | $m/s^2$ |
| Density | kilogram per cubic meter | $kg/m^3$ |
| Entropy | joule per kelvin | J/K |
| Thermal flux density | watt per square meter | $W/m^2$ |

## SECTION 7. RULES FOR USE OF SI UNITS IN ASME PUBLICATIONS

The kilogram is the unit of mass. The newton is the unit of force and shall be used rather than kilogram-force (which is a non-SI unit). In SI, the difference between mass and force is very clear. The term *weight* has been used by engineers and scientists to denote the force of local gravity. Although this has been the meaning accepted for scientific use, the term is also widely used to denote other closely-related forces and to denote mass.

This fact is intertwined with the past use of the same names as units of both force and mass (e.g., lbf and lbm, and kgf and kg).

Both ambiguities lead to communication difficulties. Therefore, the use of the term *weight* is discouraged in ASME technical communications.

Either "force of gravity on" or "gravity force on" will be far less likely to be misinterpreted than "weight of".

Length measurements in technical papers and publications should be expressed in millimeters or meters. Centimeters should be avoided. Other units which may be used with SI units are given in Sections 10 and 11.

ASME requirements establish the use of SI units in the following manner—either:

As the preferred units with customary units in parentheses:

60.0 mm (2.36 in.)
170 kPa (24.7 psi)
1.60 MJ (1519 Btu)
600 N (61.22 kgf)

In parentheses following quantities in other units:

2.45 in. (62.2 mm)
25 psi (172 kPa)
1500 Btu (1.58 MJ)
60 kgf (588 N)

or:

As the only unit without customary unit equivalents:

104.5 J
24.5 MN



Copyright ASME International
Provided by IHS under license with ASME
No reproduction or networking permitted without license from IHS
Not for Resale

When nominal sizes that are not measurements but are names of items are used, no conversion should be made, e.g., ¼—20 UNC thread, 2 X 4 lumber.

Requirements for tabular data are presented in the appendices.

## SECTION 8. CONVERSION AND ROUNDING

Conversion of quantities between systems of units requires careful determination of the number of significant digits to be retained. To convert "one quart of oil" to "0.946 352 9 liter of oil" is, of course, nonsense because the intended accuracy of the values does not warrant a conversion to seven decimal places. All conversions, to be logical, must be rounded based on the precision of the original quantity, either expressed by a tolerance or implied by the nature of the quantity.

Where a value represents a maximum or minimum limit that must be respected, the rounding must be in the direction that does not violate the original limit.

The ultimate test of a correct conversion is fidelity to the intended form, fit, function, and interchangeability. It is not an automatic process, but requires sound engineering judgment. One or more initial zeroes are not called "significant". Zeroes at the end of a number are considered significant only when they represent the true value more closely than one more or one less.

In any conversion take the following steps:

1. Convert the values and tolerance, if there is one, by multiplying by the approximate conversion factor.
2. Choose the number of significant digits to be retained in the converted value. See rounding practices in par. 8.1 and 8.2.
3. Round off the converted value to the desired number of significant digits using the rules in the following table which apply to all the rounding practices in par. 8.1 and 8.2, except par. 8.2.1.

| When the First Digit Dropped Is: | The Last Digit Retained Is: |
|---|---|
| Less than 5 | Unchanged |
| More than 5 or 5 followed by other than all zeros | Increased by 1 |
| 5 followed only by zeros | Unchanged if even<br>Increased by 1 if odd |

### 8.1 Rounding of General Technical Data

The following chart based on the first significant digits of the conversion factor and a comparison of the original and converted values can be used to determine the number of significant digits to be retained in converted values other than drawing dimensions and temperatures.

As an example, conversion of 34 feet to meters is as follows:

(a) From Appendix 9 the conversion factor is 0.3048 m/ft. The converted value is 10.3632 m.

(b) The first significant digit of the conversion factor is "3" which is between 1 and 5. Therefore, the top half of the chart is used.

(c) Compare the first significant digits of the original value and the converted value. The "1" in 10.3632 m is less than the "3" in 34 feet.

(d) Therefore the converted value should be rounded to one more significant digit than the original value; thus 34 feet becomes 10.4 meters.



Copyright ASME International
Provided by IHS under license with ASME
No reproduction or networking permitted without license from IHS
Not for Resale

| 1st Significant Digit of Conversion Factor | 1st Significant Digit of Converted Value | Round to | Example |
|---|---|---|---|
| 1 - 5 | ⩾ 1st significant digit of orig. value | same no. significant digits | 31 ft X 0.3048 m/ft = 9.4488 m which rounds to 9.4 |
| | < 1st significant digit of orig. value | one more significant digit | 34 ft X 0.3048 m/ft = 10.3632 m which rounds to 10.4 |
| 6 - 9 | ⩽ 1st significant digit of orig. value | same no. significant digits | 25 psi X 6.895 kPa/psi = 172.375 kPa which rounds to 170 (The final 0 is not a significant digit but is required to give correct magnitude) |
| | > 1st significant digit of orig. value | one less significant digit | 10.5 yd X 0.9144 m/yd = 9.6102 m which rounds to 9.6 m |

#### 8.1.1 Rounding of Temperatures

Temperatures can be rounded to the nearest whole degree or a multiple of whole degrees.

### 8.2 Rounding of Toleranced Values

There are several methods used to determine the number of significant digits to be retained in converted values. Following are three common practices.

#### 8.2.1 Rounding Inward.

This practice rounds the converted values to within the range of the original dimension and tolerance. For example, 0.880 ± 0.003 inch is 0.877 to 0.883 inch which equals 22.2758 to 22.4282 millimeters. Two decimal places in millimeters could be considered comparable to three decimal places in inches when considering the accuracy required and the measuring equipment that would be used in machining or inspecting this dimension. The 22.2758 to 22.4282 range would therefore round to 22.28 to 22.42. Note that the lower limit is rounded up and the upper limit is rounded down.

The advantage of this practice is that absolutely every part meeting the converted dimension and tolerance would also meet the inch dimension and tolerance. The disadvantage to this practice is that tolerance is always decreased. In this example the tolerance reduction is 0.0124 mm (0.00049 inch), approximately 8%.

#### 8.2.2 Rounding Based on Decimal Places.

This practice assumes that the number of decimal places reflects the intended precision. Millimeter dimensions are then rounded to one less place than the inch dimension and tolerance, but no less than a certain number of decimal places – generally two decimal places. In this case 0.880 ± 0.003 inch



Copyright ASME International
Provided by IHS under license with ASME
No reproduction or networking permitted without license from IHS
Not for Resale

equals 22.3520 ± 0.0762 mm, which would be 22.35 ± 0.08 mm. The increase in tolerance is ± 0.0038 or a total of 0.0076 mm (0.0003 inch), or approx. 5%. 0.75 ± 0.01 inch equals 19.050 ± 0.254 which would be 19.05 ± 0.25 mm, a decrease in total tolerance of 0.008 mm (0.00031 inch).

The practice of basing the number of decimal places in the converted value on the number of decimal places in the original dimension presumes that the number of decimal places in the original dimension reflects the intended precision. This practice may be most suitable for conversion of millimeters to inches where the designer is aware that the dimensions are to be converted.

When converting millimeters to inches, inches would be expressed to one more decimal place than the millimeter dimension. Thus, when expressing the width of a bracket, 150 mm could be shown and the conversion to 5.9 inches would be satisfactory. However, when showing the internal diameter of a ball bearing, 150.000 mm would be required to get a conversion to 5.9055 inches.

**8.2.3 Rounding Based on Total Tolerance.**

Using another practice, the number of decimal places is determined by the size of the total tolerance applied to the dimension. The following chart may be used:

| Total Tolerance In Inches | | Converted Value In Millimeters Shall be Rounded To |
|---|---|---|
| At Least | Less Than | |
| 0.000 04 | 0.0004 | 4 places (0.0001) |
| 0.000 4 | 0.004 | 3 places (0.001) |
| 0.004 | 0.04 | 2 places (0.01) |
| 0.04 | — | 1 place (0.1) |

0.880 ± 0.003 inch equals 22.3520 ± 0.0762 mm. The total tolerance is 0.006 inch which is between 0.004 and 0.04 inch. Thus the dimension and tolerance would be rounded to 2 decimal places, 22.35 ± 0.08 mm.

**8.3 Numerical Values in Formulas**

Formulas which use letter symbols to represent physical quantities should be valid with any units used. However, in practice, formulas may have coefficients which contain unit conversion factors as well as empirical or other factors. Such formulas are tailored for use with specific units, and the engineer may wish to "convert" them so that a specific set of SI units can be used directly. It is essential that any "unit-tailored" formula be accompanied by clear directions for correct units to be used.

8.3.1 describes a recommended method of handling units. 8.3.2 describes a method of converting formulas which contain coefficients or empirical factors which depend on the units used.

**8.3.1** If a formula is in unit-independent form, units can be most simply determined as numerical values are substituted.

Example: The power which can be safely transmitted by a rotating, round shaft is given by

$$P = \frac{\pi}{16} \tau D^3 \omega$$



Copyright ASME International
Provided by IHS under license with ASME
No reproduction or networking permitted without license from IHS
Not for Resale

in which

$\tau$ is the allowable shear stress
D is the diameter of the shaft
$\omega$ is the angular speed of the shaft.

For the values

$\tau = 6000 \text{ lbf/in}^2 = 41.4 \text{ MPa} = 41.4 \times 10^6 \text{ N/m}^2$
$D = 1.00 \text{ in} = 0.0254 \text{ m}$
$\omega = 1000 \text{ rev/min} = 104.7 \text{ rad/s}$

the substitution is carried out as follows:

$$P = \frac{\pi \ (6000 \text{ lbf/in}^2)\,(1.00 \text{ in})^3 \ (1000 \text{ rev/min})\,(2\pi \text{ rad/rev})}{16 \quad (12 \text{ in/ft})\,(33\,000 \text{ ft} \cdot \text{lbf/min} \cdot \text{HP})} = 18.7 \text{ HP}$$

or,

$$P = \frac{\pi}{16}(41.4 \times 10^6 \text{ N/m}^2)\,(0.0254 \text{ m})^3 \ (104.7 \text{ rad/s})$$
$$= 13\,900 \text{ N} \cdot \text{m/s}$$
$$= 13.9 \text{ kW}$$

The results agree since $18.7 \text{ HP}\left(\frac{0.7457 \text{kW}}{\text{HP}}\right) = 13.9 \text{kW}$, properly rounded.

A check of the units should be made by algebraic "cancelling" prior to carrying out of the multiplication and/or division.

If the formula is to be used repeatedly to give horsepower in terms of diameter in inches and angular speed in rev/min, with a shear stress of 6000 psi, it may be "unit-tailored" by incorporating the appropriate conversion factors with the $\pi/16$ and 6000 psi as follows:

$$P = \frac{\pi \ (6000 \text{ lbf/in}^2)\,(2\pi \text{ rad/rev})\,D^3\,\omega}{16 \ (12 \text{ in/ft})\,(33\,000 \text{ ft} \cdot \text{lbf/min} \cdot \text{HP})}$$
$$= \frac{D^3\,\omega}{53.5 \text{ in}^3 \cdot \text{rpm/HP}}$$

It is sound practice to write the units of the factor 53.5; thus when values such as D = 1.00 in and $\omega$ = 1000 rpm are substituted,

$$P = \frac{(1.00 \text{ in})^3 \ (1000 \text{ rpm})}{53.5 \text{ in}^3 \cdot \text{rpm/HP}} = 18.7 \text{ HP}$$

all units except HP cancel properly upon multiplication and division.

**8.3.2** A formula may have the general form

$$A = K \frac{B^m}{C^n} \qquad \text{Eq. 1}$$

where K is a constant which may contain a unit conversion factor as well as other factors, and A, B, and C represent variables measured in U.S. customary units. If the conversion factors for these variables are a, b, c, then $K_{SI}$ (the corresponding factor for the converted formula) can be obtained from



Copyright ASME International
Provided by IHS under license with ASME
No reproduction or networking permitted without license from IHS
Not for Resale

$$\frac{A}{a} = K\frac{\left(\frac{B}{b}\right)^m}{\left(\frac{C}{c}\right)^n} \qquad \text{Eq. 2}$$

Example: The power which can be safely transmitted by a rotating, round shaft is given as

$$P(HP) = \frac{D^3\ (in)\ N\ (rpm)}{53.5\ in^3 \cdot rpm/HP}$$

where the following units will be used in the conversion of the formula:

| | customary | SI |
|---|---|---|
| P | HP | kW |
| D | in | mm |
| N | rpm | rad/s |

Applying the form of Eq. 2 to Eq. 1

$$\frac{P}{p} = \frac{1}{53.5}\left(\frac{D}{d}\right)^3\left(\frac{N}{n}\right)$$

where $p = \dfrac{0.7457\ kW}{HP}$

$$d = \frac{25.4\ mm}{in}$$

$$n = \frac{\pi\ rad/s}{30\ rev/min} = 0.1047\ \frac{rad/s}{rev/min}$$

so that

$$K_{SI} = (0.7457)\left(\frac{1}{53.5}\right)\left(\frac{1}{25.4}\right)^3\left(\frac{1}{0.1047}\right)$$

$$= 8.127 \times 10^{-6}$$

to prove, calculate in both systems:

| | |
|---|---|
| D = 1 in | D = 25.4 mm |
| n = 1000 rpm | n = 104.7 rad/s |

In customary system:

$$P = \frac{(1.00\ in)^3\ (1000\ rpm)}{53.5\ in^3 \cdot rpm/HP} = 18.7\ HP$$

In SI:

$$P = [8.12 \times 10^{-6}\ kW/(mm^3 \cdot rad/s)]\ (25.4\ mm)^3\ (104.7\ rad/s) = 13.9\ kW$$

Proof:

$$(18.7\ HP)\ (0.7457\ kW/HP) = 13.9\ kW$$



Copyright ASME International
Provided by IHS under license with ASME
No reproduction or networking permitted without license from IHS
Not for Resale

## SECTION 9. DIMENSIONING

There are strict rules about dimensioning but fortunately they are very simple.

1. In general, product engineering drawings are dimensioned in millimeters or decimal parts of a millimeter except for surface roughness which is expressed in micrometers.
2. On drawings where very large items are depicted such as construction and architectural, dimension in meters and decimal parts of a meter using three or more decimal places, e.g., 32 meters 40 millimeters would be 32.040 m or 32.040 (see rule 3).
3. If the drawing is dimensioned "all in millimeters or meters," this should be indicated in note form applicable to all references.
4. *Do not use centimeters on drawings.*
5. The size of a millimeter should be kept in mind.
   1 mm = 1/25.4 in. ≃ 0.039 370 in. about 40-thousandths.
   0.1 mm ≃ 0.004 in.
   0.01 min ≅ 0.0004 in.

Dimensioning to more than *two* decimal places in millimeters will be an uncommon occurrence.

6. Always leave a space between the number and symbol:
   1.71 mm not 1.71mm.
7. When using five or more figures in tables and text, space these as 10 000 or 100 000. Do not use commas. The space should also be used with quantities of four figures when columnized with quantities having five or more.
8. Dimensional practice for drawings is governed by ANSI Y14.5, Dimensioning and Tolerancing, published by ASME.
9. The use of tables is recommended where conversion of drawings is necessary, with dimensions arranged in ascending order of magnitude and other parameters listed in the same manner but in separate columns. These tables may be placed on separate sheets and may be generated as computer printouts.

## SECTION 10. UNITS OUTSIDE THE INTERNATIONAL SYSTEM

### Units Used with the International System

Certain units which are not part of SI are in widespread use. These units play such an important part that they must be retained for general use with the International System of Units. They are given in Table 5. It should be recognized that these units need not be supplemented by the equivalent SI units unless desired for clarity.

The international symbol for liter is the lower case "l", which can easily be confused with the numeral "1". Accordingly, the symbol "L" is recommended for United States use.

It is likewise necessary to recognize, outside the International System, some other units which are useful in specialized fields of scientific research, because their values expressed in SI units must be obtained by experiment, and are therefore not known exactly (Table 6).



Copyright ASME International
Provided by IHS under license with ASME
No reproduction or networking permitted without license from IHS
Not for Resale

**TABLE 5–UNITS IN USE WITH THE INTERNATIONAL SYSTEM**

| Name | Symbol | Value in SI Unit |
|---|---|---|
| minute | min | 1 min = 60 s |
| hour | h | 1 h = 60 min = 3 600 s |
| day | d | 1 d = 24 h = 86 400 s |
| degree | ° | $1° = (\pi/180)$ rad |
| minute | ′ | $1' = (1/60)° = (\pi/10\,800)$ rad |
| second | ″ | $1'' = (1/60)' = (\pi/648\,000)$ rad |
| liter | L* | 1 L = 1 $dm^3$ = $10^{-3}$ $m^3$ |
| metric ton | t | 1 t = $10^3$ kg = 1 Mg |

*Liter—This is the spelling recommended by the ASME Metric Study Committee for use in ASME publication. The alternate spelling, "Litre," may be used at the discretion of the author.

**TABLE 6–UNITS USED WITH THE INTERNATIONAL SYSTEM IN SPECIALIZED FIELDS[2]**

| Name | Symbol | Magnitude |
|---|---|---|
| electronvolt | eV | $1.602\,19 \times 10^{-19}$ J |
| unified atomic mass unit | u | $1.660\,53 \times 10^{-27}$ kg |
| astronomical unit | AU | $149\,600 \times 10^6$ m |
| parsec | pc | $30\,857 \times 10^{12}$ m |

[2] Special Publication 330, p. 14 National Bureau of Standards.

**SECTION 11. UNITS ACCEPTED TEMPORARILY**

In view of existing practice, the CIPM (1969) considered it was preferable to keep for the time being, for use with those of the International System, the units listed in Table 7.

**TABLE 7–UNITS TO BE USED WITH THE INTERNATIONAL SYSTEM FOR A LIMITED TIME**

| Name | Symbol | Value in SI Units |
|---|---|---|
| nautical mile | | 1 nautical mile = 1852 m |
| knot | | 1 nautical mile per hour = (1852/3600)m/s |
| ångstrom | Å | 1 Å = 0.1 nm = $10^{-10}$ m |
| are | a | 1 a = 1 $dam^2$ = $10^2$ $m^2$ |
| hectare | ha | 1 ha = 1 $hm^2$ = $10^4$ $m^2$ |
| barn[a] | b | 1 b = 100 $fm^2$ = $10^2 \times 10^{-30}$ $m^2$ = $10^{-28}$ $m^2$ |
| standard atmosphere | atm | 1 atm = 101 325 Pa |
| gal[b] | Gal | 1 Gal = 1 $cm/s^2$ = $10^{-2}$ $m/s^2$ |
| curie[c] | Ci | 1 Ci = $3.7 \times 10^{10}$ $s^{-1}$ |
| röntgen[d] | R | 1 R = $2.58 \times 10^{-4}$ C/kg |
| rad[e] | rad | 1 rad = $10^{-2}$ J/kg |
| bar | bar | 1 bar = 0.1 MPa = $10^5$ Pa |

(a) The barn is a special unit employed in nuclear physics to express effective cross sections.
(b) The gal is a special unit employed in geodesy and geophysics to express the acceleration due to gravity.
(c) The curie is a special unit employed in nuclear physics to express activity of radionuclides [12th CGPM (1964) Resolution 7].
(d) The röntgen is a special unit employed to express exposure of X or $\gamma$ radiations.
(e) The rad is a special unit employed to express absorbed dose of ionizing radiations. When there is risk of confusion with the symbol for radian, rd may be used as symbol for rad.



Copyright ASME International
Provided by IHS under license with ASME
No reproduction or networking permitted without license from IHS
Not for Resale

## SECTION 12. UNITS NOT TO BE USED IN ASME DOCUMENTS

**12.1 CGS Units with Special Names.** Such units are listed in Table 8, on next page. The CIPM discourages the use of CGS* units which have special names.

**12.2 Other Units Generally Deprecated**

As regards units outside the International System which do not come under Section 10, the CIPM considers that it is generally preferable to avoid them, and to use instead units of the International System. Some of those units are listed in Table 9.

**TABLE 8–CGS UNITS WITH SPECIAL NAMES[3]**
**(Not to be used in ASME publications)**

| Name | Symbol | Value in SI Units |
|---|---|---|
| erg | erg | 1 erg = $10^{-7}$ J |
| dyne | dyn | 1 dyn = $10^{-5}$ N |
| poise | P | 1 P = 1 dyn·s/cm$^2$ = 0.1 Pa·s |
| stokes | St | 1 St = 1 cm$^2$/s = $10^{-4}$ m$^2$/s |
| gauss | Gs, G | 1 Gs corresponds to $10^{-4}$ T |
| oersted | Oe | 1 Oe corresponds to $\frac{1000}{4\pi}$ A/m |
| maxwell | Mx | 1 Mx corresponds to $10^{-8}$ Wb |
| stilb | sb | 1 stilb = 1 cd/cm$^2$ = $10^4$ cd/m$^2$ |
| phot | ph | 1 ph = $10^4$ lx |

[3] Special Publication 330, p. 16, National Bureau of Standards.

**TABLE 9–OTHER UNITS[4]**
**(Not to be used in ASME publications)**

| Name | Value in SI Units |
|---|---|
| fermi | 1 fermi = 1 fm = $10^{-15}$ m |
| metric carat | 1 metric carat = 200 mg = 2 X $10^{-4}$ kg |
| torr | 1 torr = $\frac{101\,325}{760}$ Pa |
| kilogram-force (kgf) | 1 kgf = 9.806 65 N |
| calorie (cal) | 1 cal = 4.186 8 J |
| micron ($\mu$) | 1 $\mu$ = 1 $\mu$m = $10^{-6}$ m |
| X unit | 1 X unit = 1.002 X $10^{-4}$ mm approximately |
| stere (st) | 1 st = 1 m$^3$ |
| gamma ($\gamma$) | 1 $\gamma$ = 1 nT = $10^{-9}$ T |
| gamma ($\gamma$) | 1 $\gamma$ = 1 $\mu$g = $10^{-9}$ kg |
| lambda ($\lambda$) | 1 $\lambda$ = 1 $\mu$l = $10^{-6}$ l |

[4] Special Publication 330, p. 17, National Bureau of Standards.

*CGS refers to the centimeter-gram-second system which has been superseded by the SI.



Copyright ASME International
Provided by IHS under license with ASME
No reproduction or networking permitted without license from IHS
Not for Resale

## SECTION 13. SI UNITS FOR ASME USE

### TABLE 10—LIST OF SI UNITS FOR ASME USE

| Quantity | Unit* | Symbol | Other Units or Limitations |
|---|---|---|---|
| **Space and Time** | | | |
| plane angle | radian | rad | degree (decimalized) |
| solid angle | steradian | sr | . . . |
| length | meter | m | nautical mile (navigation only) |
| area | square meter | $m^2$ | . . . |
| volume | cubic meter | $m^3$ | liter (L) for liquid only (Limit use to L and mL) (cc shall not be used) |
| time | second | s | minute (min), hour (h), day (d), week, and year |
| angular velocity | radian per second | rad/s | . . . |
| velocity | meter per second | m/s | kilometer per hour (km/h) for vehicle speed, knot for navigation only |
| **Periodic and Related Phenomena** | | | |
| frequency | hertz | Hz | (hertz = cycle per second) |
| rotational speed | radian per second | rad/s | rev. per second (r/s) rev. per minute (r/min.) |
| **Mechanics** | | | |
| mass | kilogram | kg | . . . |
| density | kilogram per cubic meter | $kg/m^3$ | . . . |
| momentum | kilogram-meter per second | kg·m/s | . . . |
| moment of momentum | kilogram-square meter per second | $kg·m^2/s$ | . . . |
| angular momentum | kilogram-square meter per second | $kg·m^2/s$ | . . . |
| acceleration | meter per second squared | $m/s^2$ | . . . |
| moment of inertia | kilogram-square meter | $kg·m^2$ | . . . |
| force | newton | N | . . . |
| moment of force (torque) | newton-meter | N·m | . . . |
| pressure and stress | pascal | Pa | (pascal=newton per square meter) |
| viscosity (dynamic) | pascal-second | Pa·s | . . . |
| viscosity (kinematic) | square meter per second | $m^2/s$ | . . . |
| **Mechanics (Cont'd)** | | | |
| surface tension | newton per meter | N/m | . . . |
| energy, work | joule | J | kilowatt-hour (kW·h) |
| power | watt | W | . . . |
| impact strength | joule | J | . . . |

*Conversion factors between SI units and U.S. customary units are given in ASTM E380. (ANSI Z210.1).



Copyright ASME International
Provided by IHS under license with ASME
No reproduction or networking permitted without license from IHS
Not for Resale

**TABLE 10—LIST OF SI UNITS FOR ASME USE (Cont'd)**

| Quantity | Unit* | Symbol | Other Units or Limitations |
|---|---|---|---|
| **Heat** | | | |
| temperature-thermo.** | kelvin | K | degree Celsius (°C) |
| temperature—other than thermodynamic** | degree Celsius | °C | kelvin (K) |
| lin.expansion coeff. | meter per meter-kelvin | $K^{-1}$ | $°C^{-1}$ mm/(mm.K) |
| quantity of heat | joule | J | . . . |
| heat flow rate | watt | W | . . . |
| density of heat flow rate | watt per meter squared | $W/m^2$ | . . . |
| thermal conductivity | watt per meter-kelvin | W/(m·K) | W/(m·°C) |
| coeff. of heat transfer | watt per meter-squared-kelvin | $W/(m^2 \cdot K)$ | $W/(m^2 \cdot °C)$ |
| heat capacity | joule per kelvin | J/K | J/°C |
| specific heat capacity | joule per kilogram-kelvin | J/(kg·K) | J/(kg·°C) |
| specific energy | joule per kilogram | J/kg | . . . |
| specific enthalpy | kilojoule per kilogram | kJ/kg | . . . |
| specific entropy | kilojoule per kelvin-kilogram | kJ/(K·kg) | . . . |
| heat rate | kilojoule per kilowatt second | kJ/(kW·s) | . . . |
| **Electricity and Magnetism** | | | |
| electric current | ampere | A | . . . |
| electric charge | coulomb | C | . . . |
| vol.density of charge | coulomb per meter cubed | $C/m^3$ | . . . |
| sur. density of charge | coulomb per meter squared | $C/m^2$ | . . . |
| electric field strength | volt per meter | V/m | . . . |
| electric potential | volt | V | . . . |
| capacitance | farad | F | . . . |
| current density | ampere per meter squared | $A/m^2$ | . . . |
| mag.field strength | ampere per meter | A/m | . . . |
| mag.flux density | tesla | T | . . . |
| magnetic flux | weber | Wb | . . . |
| self-inductance | henry | H | . . . |
| permeability | henry per meter | H/m | . . . |
| magnetization | ampere per meter | A/m | . . . |
| resistance, impedance | ohm | Ω | . . . |
| conductance | siemens | S | . . . |
| resistivity | ohm-meter | Ω·m | . . . |
| conductivity | siemens per meter | S/m | . . . |
| reluctance | ampere per weber | $H^{-1}$ | . . . |
| **Light** | | | |
| luminous intensity | candela | cd | . . . |
| luminous flux | lumen | lm | . . . |
| illumination | lux | lx | . . . |
| luminance | candela per meter-squared | $cd/m^2$ | . . . |

*Conversion factors between SI units and U.S. customary are given in ASTM Ė380. (ANSI Z210.1).

**Preferred use for temperature and temperature interval is degrees Celsius (°C), except for thermodynamic and cryogenic work where kelvins may be more suitable. For temperature interval, 1 K = 1°C exactly.



Copyright ASME International
Provided by IHS under license with ASME
No reproduction or networking permitted without license from IHS

Not for Resale

## SECTION 14. INTRODUCING SI UNITS IN ASME PUBLICATIONS

**14.1** It is the policy of ASME that SI units of measurement should be included in all new papers, publications and revisions of ASME standards.

**14.2** Each ASME committee shall have the option of giving preference to U.S. customary or SI units.

**14.2.1** When preference is given to SI units, the U.S. customary units may be omitted or given in parentheses.

**14.2.2** When U.S. customary units are given preference, the SI equivalent shall be given in parentheses, or in a supplementary table as described in Section 15.

**14.3** The system of units to be used in referee decisions shall be stated in a note in each standard. For example, the note should read as follows when U.S. customary units are to be used:

Note: The values stated in U.S. customary units are to be regarded as the standard.

**14.4** The calculated SI equivalent for a U.S. customary value should be rounded to the proper number of significant figures as described herein and in ANSI Z210.1. No attempt should be made to change to different values which are used or may be adopted by other countries, except as covered in 14.5 below.

**14.5** In standards that have alternative or optional procedures based on instruments calibrated in either U.S. customary or SI units, converted values need not be included. If the optional procedures or dimensions produce equally acceptable results, the options may be shown similarly to conversions using the word "or" rather than parentheses; for example, in a 2-in. gage length metal tension test specimen, the gage length may be shown as "2 in. or 50 mm".

**14.6** A specific equivalent, for example, 25 mm (1.0 in.), need be inserted only the first time it occurs in each paragraph of a standard.

**14.7** Conventions for use of SI and U.S. customary units may differ. The equivalent expression should always be consistent with the units used. For example, liters per 100 kilometers vs miles per gallon (mpg), mm pitch (which is the crest-to-crest distance between two successive threads) vs threads per inch (tpi).

**14.8** For methods of including SI equivalents in tables, see Section 15.

**14.9** On simple illustrations the SI equivalents may be included in parentheses. On more complicated illustrations the dimensions are preferably indicated by letters and the corresponding SI units and U.S. customary shown in an accompanying table. In the case of charts or graphs, dual scales may be used to advantage.

**14.10** The need for SI equivalents can be avoided for tolerances if they are expressed in percent.

## SECTION 15. INTRODUCING SI UNITS IN TABLES

**15.1** *Case 1, Limited Tabular Material.* Provided SI equivalents in tables in parentheses or in separate columns. Example is given in Appendix 1.

**15.2** *Case 2, One or Two Large Tables.* When the size of a table and limitations of space (on the printed page) make it impractical to expand the table to include SI equivalents, the table should be duplicated in U.S. customary units and SI units. Example is given in Appendix 2. *If this procedure results in increasing the size of the standard significantly, it may be desirable to apply Case 3.*

**15.3** *Case 3, Extensive Tabular Material.* Prepare a summary appendix listing all of the units that appear in the various tables, as shown in Appendix 3, or consider the use of footnotes, as shown in Appendix 4.



Copyright ASME International
Provided by IHS under license with ASME
No reproduction or networking permitted without license from IHS
Not for Resale

## SECTION 16. METHODS OF REPORTING SI EQUIVALENTS FOR EXISTING STANDARDS UNDER REVISION

**16.1** For text material in draft preparation, show the SI equivalent in the margin.

**16.2** For tables insert the SI equivalents when there is sufficient space as illustrated. Example given in Appendix 5.

**16.3** For tables where space does not permit the SI equivalents to be written in, retype the table.

**16.4** For new illustrations it is preferable to indicate the dimensions with letters while tabulating both inch and SI values. Example given in Appendix 6.

**16.5** For existing illustrations a tabulation of SI equivalents of customary units appearing in that illustration may be inserted beneath the illustration. Example given in Appendix 7.



Copyright ASME International
Provided by IHS under license with ASME
No reproduction or networking permitted without license from IHS
Not for Resale

# PERFORMANCE TEST CODES

While providing for exhaustive tests, these Codes are so drawn that selected parts may be used for tests of limited scope.

A complete list of ASME publications will be furnished upon request.

Copyright ASME International
Provided by IHS under license with ASME
No reproduction or networking permitted without license from IHS

## PERFORMANCE TEST CODES NOW AVAILABLE

PTC 41 — Air Heaters . . . . . (1968)
PTC 23 — Atmospheric Water Cooling Equipment . . . . . (1958)
PTC 8.2 — Centrifugal Pumps . . . . . (1965)
PTC 12.1 — Closed Feedwater Heaters . . . . . (1978)
PTC 4.2 — Coal Pulverizers . . . . . (1969)
PTC 10 — Compressor and Exhausters . . . . . (1965)
PTC 39.1 — Condensate Removal Devices for Steam Systems . . . . . (1980)
PTC 2 — Definitions and Values . . . . . (1980)
PTC 9 — Displacement Compressors, Vacuum Pumps and Blowers . . . . . (1970)
PTC 7.1 — Displacement Pumps . . . . . (1962)
PTC 12.3 — Deaerators . . . . . (1977)
PTC 27 — Determining Dust Concentration in a Gas Stream . . . . . (1957)
PTC 38 — Determining the Concentration of Particulate Matter in a Gas Stream . . . . . (1980)
PTC 28 — Determining the Properties of Fine Particulate Matter . . . . . (1965)
PTC 3.1 — Diesel and Burner Fuels . . . . . (1958)
PTC 21 — Dust Separating Apparatus . . . . . (1941)
PTC 24 — Ejectors . . . . . (1976)
PTC 14 — Evaporating Apparatus . . . . . (1970)
PTC 16 — Gas Producers and Continuous Gas Generators . . . . . (1958)
PTC 22 — Gas Turbine Power Plants . . . . . (1966)
PTC 3.3 — Gaseous Fuels . . . . . (1969)
PTC 1 — General Instructions . . . . . (1980)
PTC 18 — Hydraulic Prime Movers . . . . . (1949)
PTC 31 — Ion Exchange Equipment . . . . . (1973)
PTC 33 — Large Incinerators . . . . . (1978)
PTC 32.1 — Nuclear Steam Supply Systems . . . . . (1969)
PTC 20.2 — Overspeed Trip Systems for Steam Turbine-Generator Units . . . . . (1965)
PTC 20.3 — Pressure Control Systems Used on Steam Turbine-Generator Units . . . . . (1970)
PTC 18.1 — Pumping Mode of Pump/Turbines . . . . . (1978)
PTC 17 — Reciprocating Internal-Combustion Engines . . . . . (1973)
PTC 7 — Reciprocating Steam-Driven Displacement Pumps . . . . . (1949)
PTC 5 — Reciprocating Steam Engines . . . . . (1949)
PTC 25.3 — Safety and Relief Valves . . . . . (1976)
PTC 3.2 — Solid Fuels . . . . . (1954)
PTC 20.1 — Speed and Load Governing Systems for Steam Turbine-Generator Units . . . . . (1977)
PTC 29 — Speed-Governing Systems for Hydraulic Turbine-Generator Units . . . . . (1965)
PTC 26 — Speed-Governing Systems for Internal Combustion Engine-Generator Units . . . . . (1962)
PTC 12.2 — Steam Condensing Apparatus . . . . . (1955)
PTC 4.1 — Steam-Generating Units . . . . . (1964)
PTC 6 — Steam Turbines . . . . . (1976)
PTC 6A — Appendix A to Test Code for Steam Turbines . . . . . (1964)

PTC 6 Report — Guidance for Evaluation of Measurement Uncertainty in Performance Tests of Steam Turbines . . . . (1969)
PTC 6S Report — Simplified Procedures for Routine Performance Tests of Steam Turbines . . . . . (1970)
PTC 32.2 Report — Methods of Measuring the Performance of Nuclear Reactor Fuel in Light Water Reactors . . . . . (1978)

C00049

Not for Resale