PTC 25-2001

ASME PTC 25-2001
(Revision of ASME PTC 25-1994)

PRESSURE RELIEF DEVICES

PERFORMANCE TEST CODES

ISBN 0-7918-2710-0

9 780791 827109

C06101

ASME

An American National Standard

The American Society of Mechanical Engineers

Copyright ASME International
Provided by IHS under license with ASME
No reproduction or networking permitted without license from IHS

Not for Resale

ASME PTC 25-2001
(Revision of ASME PTC 25-1994)

PRESSURE RELIEF DEVICES

PERFORMANCE TEST CODES

An American National Standard



The American Society of Mechanical Engineers

--`,,`-`-`,,`,,`,`,,`---

Copyright ASME International
Provided by IHS under license with ASME
No reproduction or networking permitted without license from IHS

Date of Issuance: February 28, 2002

The next edition of this Code is scheduled for publication in 2006. There will be no addenda issued to this edition.

ASME will issue written replies to inquiries concerning interpretations of technical aspects of this Code.

ASME is the registered trademark of The American Society of Mechanical Engineers.

This code or standard was developed under procedures accredited as meeting the criteria for American National Standards. The Consensus Committee that approved the code or standard was balanced to assure that individuals from competent and concerned interests have had an opportunity to participate. The proposed code or standard was made available for public review and comment that provides an opportunity for additional public input from industry, academia, regulatory agencies, and the public-at-large.

ASME does not "approve," "rate," or "endorse" any item, construction, proprietary device, or activity.

ASME does not take any position with respect to the validity of any patent rights asserted in connection with any items mentioned in this document, and does not undertake to insure anyone utilizing a standard against liability for infringement of any applicable letters patent, nor assume any such liability. Users of a code or standard are expressly advised that determination of the validity of any such patent rights, and the risk of the infringement of such rights, is entirely their own responsibility.

Participation by federal agency representative(s) or person(s) affiliated with industry is not to be interpreted as government or industry endorsement of this code or standard.

ASME accepts responsibility for only those interpretations of this document issued in accordance with the established ASME procedures and policies, which precludes the issuance of interpretations by individuals.

No part of this document may be reproduced in any form,
in an electronic retrieval system or otherwise,
without the prior written permission of the publisher.

The American Society of Mechanical Engineers
Three Park Avenue, New York, NY 10016-5990

Copyright © 2002 by
THE AMERICAN SOCIETY OF MECHANICAL ENGINEERS
All Rights Reserved
Printed in U.S.A.

--`,`-`-`,,`,,`,`,,`---

Copyright ASME International
Provided by IHS under license with ASME
No reproduction or networking permitted without license from IHS

CONTENTS

Foreword vii
Committee Roster viii

0 Introduction 1

1 Object and Scope 1
1.1 Object 1
1.2 Scope 1
1.3 Measurement Uncertainty 1
1.4 General 1

2 Definitions and Description of Terms 3
2.1 Purpose 3
2.2 General 3
2.3 Types of Devices 3
2.4 Parts of Pressure Relief Devices 4
2.5 Dimensional Characteristics — Pressure Relief Valves 6
2.6 Dimensional Characteristics — Nonreclosing Pressure Relief Devices 6
2.7 Operational Characteristics of Pressure Relief Devices 6
2.8 Description of Terms 9

Part I Flow Capacity Testing

3 Guiding Principles 12
3.1 Items on Which Agreement Shall Be Reached 12
3.2 Qualification of Person Supervising the Test 12
3.3 Responsibility of Person Supervising the Test 12
3.4 Test Apparatus 12
3.5 Preliminary Tests 12
3.6 Spare Instruments 12
3.7 Calibration of Instruments 13
3.8 Metering Sections 13
3.9 Flow Resistance Test Rigs 13
3.10 Adustments During Tests 15
3.11 Records and Test Results 15
3.12 Measurement Uncertainty 15

4 Instruments and Methods of Measurements 16
4.1 General 16
4.2 Fluid Conditions, Test Conditions, and Instrumentation 16
4.3 Testing With Steam, Pressure Relief Device Discharging to Atmospheric Pressure 21

Copyright ASME International
Provided by IHS under license with ASME
No reproduction or networking permitted without license from IHS

4.4 Testing With Gas or Air, Pressure Relief Device Discharging to Atmospheric Pressure 24
4.5 Testing With Liquids, Pressure Relief Devices Discharging to Atmospheric Pressure 25
4.6 Testing With Steam, With Back Pressure Above Atmospheric 27
4.7 Testing With Gas or Air, With Back Pressure Above Atmospheric 29
4.8 Testing With Liquids, With Back Pressure Above Atmospheric 31
4.9 Testing With Gas or Air, Nonreclosing Pressure Relief Device Flow Resistance Method 32
4.10 Testing Nonreclosing Pressure Relief Devices to Determine a Set Pressure for Incompressible Fluids 33

5 Computations of Results 36
5.1 Correction of Measured Variables 36
5.2 Review of Instrument Readings 36
5.3 Use of Equation Symbols 36
5.4 Density 36
5.5 Capacity Calculations 36

6 Test Summary Report Form 50
6.1 General Instructions 50
6.2 Part I: General Information 50
6.3 Part II: Summary of Results 50
6.4 Part III: Description of Device Under Test 50
6.5 Part IV: Observed Data and Computed Results 50
6.6 Part V: Test Conditions and Corrections Agreements 51
6.7 Part VI: Test Methods and Procedures 51
6.8 Part VII: Surpporting Data 51
6.9 Part VIII: Graphical Presentation of Back-Pressure Test Results 51

Part II In-Service and Bench Testing

3 Guiding Principles 56
3.1 Items on Which Agreement Shall Be Reached 56
3.2 Qualification of Person Conducting the Test 56
3.3 Responsibility of Person Conducting the Test 56
3.4 Test Apparatus 56
3.5 Preliminary Training 56
3.6 Spare Instruments 56
3.7 Calibration of Instruments 56
3.8 Adjustments During Test 57
3.9 Records and Test Results 57
3.10 Measurement Uncertainty 57

4 Instruments and Methods of Measurements 58
4.1 General 58
4.2 Instrumentation 58
4.3 In-Service Testing Procedures 59
4.4 Bench Testing Procedures 63
4.5 Seat Tightness Test 63

5 Computation of Results 64

Copyright ASME International
Provided by IHS under license with ASME
No reproduction or networking permitted without license from IHS

5.1 Correction of Measured Variables 64
5.2 Review of Instrument Readings 64
5.3 Computation of Operational Characteristics 64

6 Test Summary Report Form 65
6.1 General Instructions 65
6.2 Part I: General Information 65
6.3 Part II: Summary of Results 65
6.4 Part III: Description of Valve Under Test 65
6.5 Part IV: Observed Data and Computed Results 65
6.6 Part V: Contract and Agreed Test Conditions Corrections 65
6.7 Part VI: Test Methods and Procedures 65
6.8 Part VII: Supporting Data 65

Figures

1 Typical Curtain Areas of Pressure Relief Valves 7
2 Recommended Arrangements for Testing Nonreclosing Pressure Relief Device Flow Resistance 14
3 Recommended Arrangements for Testing Devices With Atmospheric Back Pressure — Flow-Meter Test Arrangement 17
4 Recommended Internal Contours of Fittings, Adapter, and Reducers Between Test Vessel and Test Device 20
5 Recommended Arrangements for Testing Devices With Atmospheric Back Pressure — Weighed-Condensate Test Arrangement 21
6 Recommended Arrangements for Testing Devices With Atmospheric Back Pressure — Weighed-Water Test Arrangement 21
7 Recommended Discharge Arrangements for Testing Devices With Superimposed Back Pressure 22
8 Recommended Arrangement for Testing Nonreclosing Pressure Relief Devices in Combination With Pressure Relief Valves 22
9 Recommended Discharge Arrangements for Testing Devices With Built-up Back Pressure 27
10 Recommended Arrangements for Conducting Opening Test on Nonreclosing Pressure Relief Devices With Incompressible Fluids 34
11 Recommended Arrangement for Testing Valves With Compressible Fluids 60
12 Recommended Arrangement for Testing Valves With Incompressible Fluids 61
13 Pilot-Operated Pressure Relief Valve Field Test Accessory 62

Forms

5.5.1 Pressure Relief Device Tested With Steam and Water — Observed Data and Computed Results — Weighed-Water Method 39
5.5.2 Pressure Relief Device Tested With Steam — Observed Data and Computed Results — Flow-Meter Method 40
5.5.3 Pressure Relief Device Tested With Liquids — Observed Data and Computed Results — Flow-Meter Method 42
5.5.4 Pressure Relief Device Tested With Air or Gas — Observed Data and Computed Results — Flow-Meter Method 43
5.5.5 Pressure Relief Device Tested With Air or Gas — Observed Data and Computed Results — Sonic-Flow Method 45
5.5.6 Pressure Relief Device Tested With Fuel Gas — Observed Data and Computed Results — Flow-Meter Method 46

Copyright ASME International
Provided by IHS under license with ASME
No reproduction or networking permitted without license from IHS

5.5.7 Nonreclosing Pressure Relief Device Tested With Air — Observed Data and Computed Results — Flow Resistance 48
6.5.1 Pressure and Relief Valve Performance Test Report — Steam 52
6.5.2 Pressure and Relief Valve Performance Test Report — Liquids and Water 53
6.5.3 Pressure and Relief Valve Performance Test Report — Air, Gas, or Fuel Gas 54
6.5.4 Nonreclosing Pressure Relief Device Performance Test Report — Air, Gas, or Fuel Gas 55

Mandatory Appendices

I SI (Metric) Units and Conversion Factors 67
II Examples of Determining Flow Rate Uncertainties 70

Nonmandatory Appendices

A References 75

Tables

IA SI (Metric) Units 68
IB Commonly Used Conversion Factors 69
II-1 Table of Uncertainty Parameters 71

Copyright ASME International
Provided by IHS under license with ASME
No reproduction or networking permitted without license from IHS

FOREWORD

In December 1948, the ASME Boiler and Pressure Vessel Committee recommended to the ASME Performance (then Power) Test Codes Committee that a Code be prepared on the testing of safety and relief valves. This request resulted in the publication of the original test code for safety and relief valves (PTC 25-1958) and was applicable only to tests with atmospheric discharge. In June 1964, the ASME Performance (then Power) Test Code Committee authorized PTC Committee Number 25 on Safety and Relief Valves to prepare a single test code (PTC 25.2-1966) to cover test of valves discharging to atmosphere, superimposed, or built-up back pressure. In March of 1971, the ASME Performance Test Codes Committee authorized PTC Committee Number 25 on Safety and Relief Valves to prepare a general revision to the test code, the result of which was PTC 25.3-1976, approved as an American National Standard on August 19, 1976.

In 1978, the ASME Board on Performance Test Codes once again authorized the PTC Committee Number 25 to prepare a general revision of the test code. This revision, PTC 25.3-1988, approved by the ASME Board on Performance Test Codes on March 14, 1988, differed from its predecessors primarily by the omission of the section concerning theoretical relieving capacity and coefficient of discharge.

In 1991, the ASME Board on Performance Test Codes revised the name of PTC Committee Number 25 to “Pressure Relief Devices” and authorized the Committee to prepare a revised test code of the same name with a scope that was extended to include a broader range of closing and nonreclosing pressure relief devices and to broaden the discussion of in-service and bench testing.

This edition of the Code was approved and adopted by the American National Standards Institute as meeting the criteria as an American National Standard on May 25, 2001.

This Committee invites comments which will be considered for incorporation in future revisions. These should be addressed to Director, PTC. ASME International, Three Park Avenue, New York, NY 10016-5990.

--`-`-`-,,`,,`,`,,`---

Copyright ASME International
Provided by IHS under license with ASME
No reproduction or networking permitted without license from IHS

PERSONNEL OF PERFORMANCE TEST CODE COMMITTEE NO. 25 PRESSURE RELIEF DEVICES

(The following is the roster of the Committee at the time of approval of this Standard.)

OFFICERS

S. F. Harrison, Jr., *Chair*
D. M. Papa, *Vice Chair*
U. D'Urso, *Secretary*

COMMITTEE PERSONNEL

J. A. Cox, DeLuca Test Equipment, Inc.
S. F. Harrison, Jr., The National Board of Boiler and Pressure Vessel Inspectors
W. F. Hart, Hart Technical Services
D. R. Keyser, Naval Air Development Center
C. A. Neumann, Eastman Kodak Co.
D. M. Papa, Consultant
D. J. Scallan, Hydroseal Valve Co.
D. G. Thibault, Anderson Greenwood Crosby
Z. Wang, BS & B Safety Systems
B. S. York, Continental Disc Corp.

Copyright ASME International
Provided by IHS under license with ASME
No reproduction or networking permitted without license from IHS

SECTION 0
INTRODUCTION

This Code provides standards for conducting and reporting tests on reclosing and nonreclosing pressure relief devices normally used to terminate an abnormal internal or external rise in pressure above a predetermined design value in boilers, pressure vessels, and related piping equipment. This Code covers the methods and procedures to determine relieving capacity and additional operating characteristics which may be required for certification or other purposes by other codes. This is accomplished by dividing the Code into two parts following Sections I and II; Part I, "Flowing Capacity Testing," and Part II, "In-Service and Bench Testing."

This Code does not necessarily cover the methods and procedures to satisfy operating and other conditions as may be required by other codes. Establishment of pressure relief device ratings and rules of safe construction do not fall within the province of this Code.

SECTION 1
OBJECT AND SCOPE

1.1 OBJECT

The object of the test is to determine the performance of pressure relief devices. These tests determine one or more of the following:

(a) dimensional, operational, and mechanical characteristics

(b) relieving pressure

(c) relieving flow capacity at test pressure

(d) individual flow resistance

Procedures for conducting the tests, calculating the results, and making corrections are defined.

1.2 SCOPE

1.2.1 This Code provides instructions in Part I for flow capacity testing and in Part II for in-service and bench testing. Testing of reclosing and nonreclosing pressure relief devices is conducted under various inlet and outlet conditions using steam, gases, and liquids for which valid physical properties are known.

1.2.2 The validity of tests shall be determined in accordance to the requirements of 1.3.

1.3 MEASUREMENT UNCERTAINTY

In order to qualify as a valid code test, the total uncertainties of the test, as calculated by the procedures of ASME PTC 19.1, must be equal to or less than the values of maximum acceptable uncertainty. The maximum acceptable uncertainty of the final flow measurement shall not exceed ±2.0% of the measured value and for results other than flow measurements. The maximum acceptable uncertainty shall not exceed ±0.5% of the measured value as determined in accordance with Part I or ±1.0% of the measured value as determined in accordance with Part II.

1.4 GENERAL

1.4.1 It is assumed that the testing facility has adequate capacity and sufficient pressure to conduct the tests. However, the users of this Code are cautioned that the capacity and pressure limitations of the testing facility may restrict the determination of satisfactory operating conditions and other operational features of the pressure relief device.

Copyright ASME International
Provided by IHS under license with ASME
No reproduction or networking permitted without license from IHS

1.4.2 In addition, field installation and/or abnormal operating conditions may adversely affect the function of the pressure relief device. It is not the intent of this Code to attempt to assess the suitability or reliability of the pressure relief device under such conditions. It should also be noted that if the temperature of the medium used to test the pressure relief device differs substantially from the temperature to which the pressure relief device is subjected while in service, the functional characteristics will be different from the test pressures, i.e., opening, closing, blowdown, and bursting pressure. In this case, it is necessary to develop appropriate corrections for the pressure relief device under test to account for these differences which is outside the scope of this Code.

1.4.3 This Code provides recommended test procedures and instrumentation for testing devices. Other test procedures or instrumentation may be used provided they can be demonstrated as having accuracy and reliability at least equal to the requirements of this Code. If another procedure or instrumentation is used, this must be agreed to in writing by the parties to the test prior to the test.

1.4.4 The test results shall be reported as measured and calculated. Only tests which comply fully with the mandatory requirements of this Code may be designated as tests conducted in accordance with the ASME Performance Test Code 25. References to other codes, unless otherwise indicated, refer to ASME Performance Test Codes. Should any specific direction in this Code, or any particular measurement, differ from those given in other ASME Performance Test Codes for similar measurements, the instructions of this Code shall prevail.

1.4.5 The requirements of ASME PTC 1, General Instructions, shall be met.

1.4.6 In some cases, the testing of pressure relief devices may involve the use of high pressure and high temperature fluid. Hazards to personnel will exist unless adequate precautionary measures are taken. Special consideration should be given to adequate design and overpressure protection to the piping system and components, safe discharge from the pressure relief devices undergoing test, and the high noise level usually associated with the discharge of pressure relief devices. The users of this Code should consult the authority having jurisdiction over these safety matters to assure the testing facility meets the minimum mandatory requirements.

Copyright ASME International
Provided by IHS under license with ASME
No reproduction or networking permitted without license from IHS

SECTION 2
DEFINITIONS AND DESCRIPTION OF TERMS

2.1 PURPOSE

The purpose of this Section is to define pressure-relief devices, their functional and operational characteristics, and to standardize the terminology covering such devices, their characteristics, and testing methods. It also includes a description of terms and symbols used in this Code. These definitions and terms shall take precedence should there be any discrepancy with the referenced material.

2.2 General

bench testing: testing of a pressure relief device on a test stand using an external pressure source with or without an auxiliary lift device to determine some or all of its operating characteristics.

flow capacity testing: testing of a pressure relief device to determine its operating characteristics including measured relieving capacity.

in-place testing: testing of a pressure relief device installed on but not protecting a system, using an external pressure source, with or without an auxiliary lift device to determine some or all of its operating characteristics.

in-service testing: testing of a pressure relief device installed on and protecting a system, using system pressure or an external pressure source, with or without an auxiliary lift device to determine some or all of its operating characteristics.

pressure relief device: a device designed to prevent pressure or vacuum from exceeding a predetermined value in a pressure vessel by the transfer of fluid during emergency or abnormal conditions.

2.3 Types of Devices

2.3.1 Reclosing Pressure-Relieving Devices

pressure relief valve (PRV): a pressure relief device designed to actuate on inlet static pressure and to reclose after normal conditions have been restored. It may be one of the following types and have one or more of the following design features.

(a) low lift PRV: a pressure relief valve in which the actual discharge area is the curtain area.

(b) full lift PRV: a pressure relief valve in which the actual discharge area is the bore area.

(c) reduced bore PRV: a pressure relief valve in which the flow path area below the seat is less than the flow area at the inlet to the valve.

(d) full bore PRV: a pressure relief valve in which the bore area is equal to the flow area at the inlet to the valve and there are no protrusions in the bore.

(e) direct spring-loaded PRV: a pressure relief valve in which the disk is held closed by a spring.

(f) pilot-operated PRV: a pressure relief valve in which the disk is held closed by system pressure and the holding pressure is controlled by a pilot valve actuated by system pressure.

(g) conventional direct spring-loaded PRV: a direct spring-loaded pressure relief valve whose operational characteristics are directly affected by changes in the back pressure.

(h) balanced direct spring-loaded PRV: a direct spring-loaded pressure relief valve which incorporates means of minimizing the effect of back pressure on the operational characteristics (opening pressure, closing pressure, and relieving capacity).

(i) internal spring PRV: a direct spring-loaded pressure relief valve whose spring and all or part of the operating mechanism is exposed to the system pressure when the valve is in the closed position.

(j) temperature and pressure relief valve: a pressure relief valve that may be actuated by pressure at the valve inlet or by temperature at the valve inlet.

(k) power-actuated PRV: a pressure relief valve actuated by an externally powered control device.

safety valve: a pressure relief valve characterized by rapid opening or closing and normally used to relieve compressible fluids.

relief valve: a pressure relief valve characterized by gradual opening or closing, generally proportional

Copyright ASME International
Provided by IHS under license with ASME
No reproduction or networking permitted without license from IHS

to the increase or decrease in pressure. It is normally used for incompressible fluids.

safety relief valve: a pressure relief valve characterized by rapid opening or closing or by gradual opening or closing, generally proportional to the increase or decrease in pressure. It can be used for compressible or incompressible fluids.

2.3.2 Nonreclosing Pressure Relief Device. A pressure relief device designed to actuate and remain open after operation. A manual resetting means may be provided.

design types:

(a) rupture disk device: a device that contains a disk which ruptures when the static differential pressure between the upstream and downstream side of the disk reaches a predetermined value. A rupture disk device includes a rupture disk and may include rupture disk holder.

(b) breaking pin device: a device actuated by static differential or static inlet pressure and designed to function by the breakage of a load-carrying section of a pin which supports a pressure-containing member.

(c) buckling pin device: a device actuated by static differential or static inlet pressure and designed to function by the buckling of an axially-loaded compressive pin which supports a pressure-containing member.

(d) shear pin device: a device actuated by static differential or static inlet pressure and designed to function by the shearing of a load-carrying member which supports a pressure containing-member.

(e) fusible plug device: a device designed to function by the yielding or melting of a plug, at a predetermined temperature, which supports a pressure-containing member or contains pressure by itself.

(f) frangible disk device: see *rupture disk device*.

(g) bursting disk device: see *rupture disk device*.

(h) direct spring-loaded device: a device actuated by static differential pressure or static inlet pressure in which the disk is held closed by a spring. Upon actuation, the disk is held open by a latching mechanism.

(i) pilot-operated device: a device in which the disk is held closed by system pressure and the holding pressure is controlled by a pilot actuated by system pressure. The pilot may consist of one of the devices listed above.

design features: nonreclosing pressure relief devices may include one or more of the following design features.

(a) low lift device: a device in which the actual discharge area is dependent on the lift of the disk.

(b) full lift device: a device in which the actual discharge area is independent of the lift of the disk.

(c) reduced bore device: a device in which the flow path area below the seat is less than the flow path area of the inlet to the device.

(d) full bore device: a device in which the flow path area below the seat is equal to the flow path area of the inlet to the device.

2.4 PARTS OF PRESSURE RELIEF DEVICES

adjusting ring: a ring assembled to the nozzle or guide of a direct spring valve, used to control the opening characteristics and/or the reseat pressure.

adjustment screw: a screw used to adjust the set pressure or the reseat pressure of a reclosing pressure relief device.

backflow preventer: a part or feature of a pilot-operated pressure relief valve used to prevent the valve from opening and flowing backwards when the pressure at the valve outlet is greater than the pressure at the valve inlet.

bellows: a flexible pressure-containing component of a balance direct spring valve used to prevent changes in set pressure when the valve is subjected to a superimposed back pressure, or to prevent corrosion between the disk holder and guide.

blowdown ring: see *adjusting ring.*

body: a pressure-retaining or containing member of a pressure relief device that supports the parts of the valve assembly and has provision(s) for connecting to the primary and/or secondary pressure source(s).

bonnet: a component of a direct spring valve or of a pilot in a pilot-operated valve that supports the spring. It may or may not be pressure containing.

breaking pin: the load-carrying element of a breaking pin nonreclosing pressure relief device.

breaking pin housing: a pressure-retaining component that supports the breaking pin in a nonreclosing pressure relief device.

Copyright ASME International
Provided by IHS under license with ASME
No reproduction or networking permitted without license from IHS

buckling pin: the load-carrying element of a buckling device.

cap: a component used to restrict access and/or protect the adjustment screw in a reclosing pressure-relief device. It may or may not be a pressure-containing part.

diaphragm: a flexible metallic, plastic, or elastomer pressure-containing member of a reclosing pressure relief device used to sense pressure or to provide opening or closing force.

disk: a moveable component of a pressure relief device that contains the primary pressure when it rests against the nozzle.

disk holder: a moveable component in a pressure relief device that contains the disk.

dome: the volume on the side of the unbalanced moving member opposite the nozzle in the main relieving valve of a pilot-operated pressure relief device.

field test: a device for in-service or bench testing of a pilot-operated pressure relief device to measure the set pressure.

gag: a device used on reclosing pressure relief devices to prevent the device from opening.

guide: a component in a direct spring or pilot-operated pressure relief device used to control the lateral movement of the disk or disk holder.

huddling chamber: the annular pressure chamber between the nozzle exit and the disk or disk holder that produces the lifting force to obtain a pop action.

knife blade: a component with multiple blades used with reverse-acting rupture disks to cut the disk when it reverses.

lift lever: a device to apply an external force to the stem of a pressure relief valve to manually operate the valve at some pressure below the set pressure.

main relieving valve: that part of a pilot-operated pressure relief device through which the rated flow occurs during relief.

nozzle: a primary pressure-containing component in a pressure relief valve that forms a part or all of the inlet flow passage.

pilot: the pressure- or vacuum-sensing component of a pilot-operated pressure relief valve that controls the opening and closing of the main relieving valve.

piston: the moving element in the main relieving valve of a pilot-operated piston-type pressure relief valve which contains the seat that forms the primary pressure containment zone when in contact with the nozzle.

pressure-containing member: a component which is exposed to and contains pressure.

pressure-retaining member: a component which holds one or more pressure-containing members together but is not exposed to the pressure.

rupture disk: the pressure-containing element in a rupture disk device that is designed to burst at its rated pressure at a specified temperature.

rupture disk holder: the structure which clamps a rupture disk in position.

seat: the pressure-sealing surfaces of the fixed and moving pressure-containing components.

shear pin: the load-carrying element of a shear pin device.

spindle: A part whose axial orientation is parallel to the travel of the disk. It may be used in one or more of the following functions:

(a) assist in alignment,

(b) guide disk travel, and

(c) transfer of internal or external forces to the seats.

spring: the element in a pressure relief valve that provides the force to keep the disk on the nozzle.

spring step: a load-transferring component in a pressure relief valve that supports the spring.

spring washer: see *spring step.*

spring button: see *spring step.*

stem: see *spindle.*

yoke: a pressure-retaining component in a pressure relief device that supports the spring in a pressure relief valve or pin in a nonreclosing device but does not enclose them from the surrounding ambient environment.

vacuum support: a component of a rupture disk to prevent flexing due to upstream vacuum or downstream back pressure.

Copyright ASME International
Provided by IHS under license with ASME
No reproduction or networking permitted without license from IHS

2.5 DIMENSIONAL CHARACTERISTICS — PRESSURE RELIEF VALVES

actual discharge area: the measured minimum net area which determines the flow through a valve.

bore area: the minimum cross-sectional flow area of a nozzle. See Fig. 1.

bore diameter: the minimum diameter of a nozzle.

curtain area: the area of the cylindrical or conical discharge opening between the seating surfaces created by the lift of the disk above the seat. See Fig. 1.

developed lift: the actual travel of the disk from closed position to the position reached when the valve is at flow-rating pressure.

discharge area: see *actual discharge area.*

effective discharge area: a nominal or computed area of flow through a pressure relief valve, differing from the actual discharge area, for use in recognized flow formulas to determine the capacity of a pressure relief valve.

inlet size: the nominal pipe size of the inlet of a pressure relief valve, unless otherwise designated.

lift: the actual travel of the disk away from closed position when a valve is relieving.

nozzle area, nozzle throat area: see *bore area.*

nozzle diameter: see *bore diameter.*

orifice area: see *effective discharge area.*

outlet size: the nominal pipe size of the outlet of a pressure relief valve, unless otherwise designated.

rated lift: the design lift at which a valve attains its rated relieving capacity.

seat angle: the angle between the axis of a valve and the seating surface. A flat-seated valve has a seat angle of 90 deg.

seat area: the area determined by the seat diameter.

seat diameter: the smallest diameter of contact between the fixed and moving portions of the pressure-containing elements of a valve.

seat flow area: see *curtain area.*

throat area: see *bore area.*

throat diameter: see *bore diameter.*

2.6 DIMENSIONAL CHARACTERISTICS — NONRECLOSING PRESSURE RELIEF DEVICES

inlet area: the cross-sectional flow area at the inlet opening of a pressure relief device.

inlet size: the nominal pipe size of the inlet of a pressure relief device, unless otherwise designated.

net flow area: the area which determines the flow after a nonreclosing pressure relief device has operated. The (minimum) net flow area of a rupture disk is the calculated net area after a complete burst of the disk, with appropriate allowance for any structural members which may reduce the net flow area through the rupture disk device.

outlet size: the nominal pipe size of the outlet passage from a pressure relief device, unless otherwise designated.

2.7 OPERATIONAL CHARACTERISTICS OF PRESSURE RELIEF DEVICES

back pressure: the static pressure existing at the outlet of a pressure relief device due to pressure in the discharge system.

blowdown: the difference between actual popping pressure of a pressure relief valve and actual reseating pressure expressed as a percentage of set pressure or in pressure units.

blowdown pressure: the value of decreasing inlet static pressure at which no further discharge is detected at the outlet of a pressure relief valve after the valve has been subjected to a pressure equal to or above the popping pressure.

breaking pressure: the value of inlet static pressure at which a breaking pin or shear pin device functions.

built-up back pressure: pressure existing at the outlet of a pressure relief device caused by the flow through that particular device into a discharge system.

burst pressure: the value of inlet static pressure at which a rupture disk device functions.

chatter: abnormal rapid reciprocating motion of the movable parts of a pressure relief valve in which the disk contacts the seat.

closing pressure: the value of decreasing inlet static pressure at which the valve disk reestablishes contact with the seat or at which lift becomes zero.

Copyright ASME International
Provided by IHS under license with ASME
No reproduction or networking permitted without license from IHS

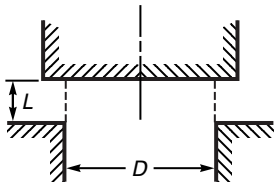

Flat-Seated Valve
Curtain area = surface of cylinder = πDL

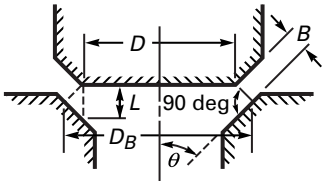

Bevel-Seated Valve
Curtain area = surface of frustrum of cone = $\pi B \frac{D+D_B}{2}$

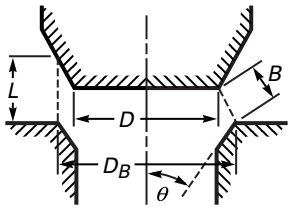

Bevel-Seated Valve
Curtain area = surface of frustrum of cone = $\pi B \frac{D+D_B}{2}$

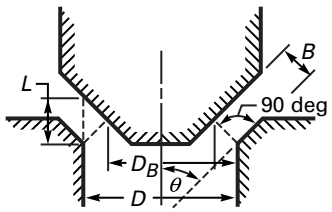

Bevel-Seated Valve
Curtain area = surface of frustrum of cone = $\pi B \frac{D+D_B}{2}$

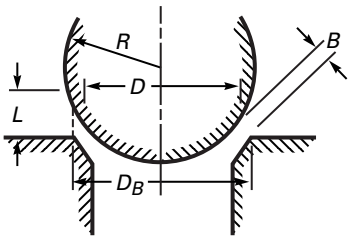

Radial-Seated Valve
Curtain area = surface of frustrum of cone = $\pi B \frac{D+D_B}{2}$

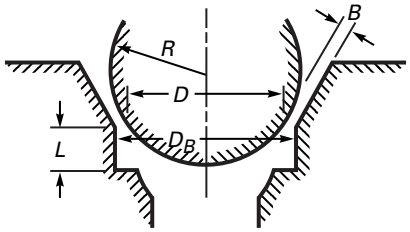

Radial-Seated Valve
Curtain area = surface of frustrum of cone = $\pi B \frac{D+D_B}{2}$

L = lift
D = seat diameter = smallest diameter at which seat touches disk
D_B = other diameter of frustrum of cone
B = slant height of frustrum of cone
θ = seat angle = angle of seating surface with axis of valve
R = radius

GENERAL NOTE: Curtain area is the discharge area unless the disk attains sufficient lift for the valve bore to become the controlling area. See para 2.5, *actual discharge area, bore area,* and *curtain area.*

FIG. 1 TYPICAL CURTAIN AREAS OF PRESSURE RELIEF VALVES

Copyright ASME International
Provided by IHS under license with ASME
No reproduction or networking permitted without license from IHS

coefficient of discharge: the ratio of the measured relieving capacity to the theoretical relieving capacity.

cold differential test pressure: the inlet static pressure at which a pressure relief valve is adjusted to open on the test stand. This test pressure includes corrections for service conditions of superimposed back pressure and/or temperature.

constant back pressure: a superimposed back pressure which is constant with time.

cracking pressure: see *opening pressure*.

dynamic blowdown: the difference between the set pressure and closing pressure of a pressure relief valve when it is overpressured to the flow-rating pressure.

flow capacity: see *measured relieving capacity*.

flow-rating pressure: the inlet stagnation pressure at which the relieving capacity of a pressure relief device is measured.

flow resistance: a dimensionless term (such as used in para. 5.5.7) which expresses the number of velocity heads lost due to flow through a rupture disk device (where velocity head is one-half the velocity squared divided by the acceleration of gravity).

flutter: abnormal, rapid reciprocating motion of the movable parts of a pressure relief valve in which the disk does not contact the seat.

leak pressure: see *start-to-leak pressure*.

leak test pressure: the specified inlet static pressure at which a quantitative seat leakage test is performed in accordance with a standard procedure.

lot of rupture disks: those disks manufactured of a material at the same time, and of the same size, thickness, type, heat, and manufacturing process, including heat treatment.

marked breaking pressure: the value of pressure marked on a breaking pin or a shear pin device or its nameplate.

marked burst pressure: the value of pressure marked on the rupture disk device or its nameplate or on the tag of the rupture disk, indicating the burst pressure at the coincident disk temperature.

marked set pressure: the value or values of pressure marked on a pressure relief device.

marked relieving capacity: see *rated relieving capacity*.

measured relieving capacity: the relieving capacity of a pressure relief device measured at the flow-rating pressure, expressed in gravimetric or volumetric units.

opening pressure: the value of increasing inlet static pressure of a pressure relief valve at which there is a measurable lift, or at which the discharge becomes continuous as determined by seeing, feeling, or hearing.

overpressure: a pressure increase over the set pressure of a pressure relief valve, usually expressed as a percentage of set pressure.

popping pressure: the value of increasing inlet static pressure at which the disk moves in the opening direction at a faster rate as compared with corresponding movement at higher or lower pressures.

primary pressure: the pressure at the inlet in a pressure relief device.

rated relieving capacity: that portion of the measured relieving capacity permitted by the applicable code or regulation to be used as a basis for the application of a pressure relief device.

reference conditions: those conditions of a test medium which are specified by either an applicable standard or an agreement between the parties to the test, which may be used for uniform reporting of measured flow test results.

relieving conditions: the inlet pressure and temperature on a pressure relief device during an overpressure condition. The relieving pressure is equal to the valve set pressure or burst (or the rupture disk burst pressure) plus the overpressure. (The temperature of the flowing fluid at relieving conditions may be higher or lower than the operating temperature.)

relieving pressure: set pressure plus overpressure.

resealing pressure: the value of decreasing inlet static pressure at which no further leakage is detected after closing. The method of detection may be a specified water seal on the outlet or other means appropriate for this application.

reseating pressure: see *closing pressure*.

seal-off pressure: see *resealing pressure*.

Copyright ASME International
Provided by IHS under license with ASME
No reproduction or networking permitted without license from IHS

secondary pressure: the pressure existing in the passage between the actual discharge area and the valve outlet in a safety, safety relief, or relief valve.

set pressure: the value of increasing inlet static pressure at which a pressure relief device displays one of the operational characteristics as defined under opening pressure, popping pressure, start-to-leak pressure, burst pressure, or breaking pressure. (The applicable operating characteristic for a specific device design is specified by the device manufacturer.)

simmer: the audible or visible escape of fluid between the seat and disk at an inlet static pressure below the popping pressure and at no measurable capacity. It applies to safety or safety relief valves on compressible-fluid service.

specified burst pressure (of a rupture disk device): the value of increasing inlet static pressure, at a specified temperature, at which a rupture disk is designed to function.

start-to-discharge pressure: see *opening pressure*.

start-to-leak pressure: the value of increasing inlet static pressure at which the first bubble occurs when a pressure relief valve is tested by means of air under a specified water seal on the outlet.

static blowdown: the difference between the set pressure and the closing pressure of a pressure relief valve when it is not overpressured to the flow-rating pressure.

superimposed back pressure: the static pressure existing at the outlet of a pressure relief device at the time the device is required to operate. It is the result of pressure in the discharge system from other sources.

test pressure: see *relieving pressure.*

theoretical relieving capacity: the computed capacity expressed in gravimetric or volumetric units of a theoretically perfect nozzle having a minumum cross-sectional flow area equal to the actual discharge area of a pressure relief valve or net flow area of a nonreclosing pressure relief device.

vapor-tight pressure: see *resealing pressure.*

variable back pressure: a superimposed back pressure that will vary with time.

warn: see *simmer*.

yield (melt) temperature: the temperature at which the fusible material of a fusible plug device becomes sufficiently soft to extrude from its holder and relieve pressure.

2.8 DESCRIPTION OF TERMS

a = minimum net flow area in.^{2}
a_d = actual discharge area, in.^{2}
a_m = meter-bore area, in.^{2}
d = meter-bore diameter, in.
d_b = minimum holder bore diameter, in.
d_b = bore diameter, in.
d_o = diameter of orifice plate, in.
d_s = seat diameter, in.
f = fanning friction factor, dimensionless
h_w = differential pressure at the meter, inches of water
k = ratio of specific heats
l = valve-disk lift, in.
m = mass flow rate, lbm/hr
q_b = volumetric rate at base condition at the meter, cfm
q_r = valve capacity at reference inlet temperature, cfm
t = length of test, min
v = specific volume, ft^3/lbm
w = mass of water or condensate, lbm (w)
w_{vl} = valve-steam leakage, lbm/hr
w_{cl} = condenser leakage, lbm/hr
w_{dr} = test-drum drainage, lbm/hr
C = valve inlet temperature correction
C = discharge coefficient, dimensionless
C_{tap} = sonic velocity at pressure tap, ft/sec
D = test rig inside diameter, ft
D = internal diameter of meter run pipe, in.
E = pipe roughness, in.
F_a = area factor for thermal expansion, dimensionless
G = mass velocity, lbm/ft^2-sec
G = specific gravity with respect to dry air, M/M_a
K = flow coefficient $K = \dfrac{C}{\sqrt{1 - \beta^4}}$
K_o = trial flow coefficient
$K_{\text{pipe B-C}}$ = pipe resistance factor between pressure taps B and C without the rupture disk device
$K_{\text{pipe B-D}}$ = pipe resistance factor between pressure taps B and D without the rupture disk device

Copyright ASME International
Provided by IHS under license with ASME
No reproduction or networking permitted without license from IHS

K_{Ri} = individual flow resistance
K_{tap} = total resistance factor to pressure tap
$K_{A\text{-}B}$ = resistance factor between pressure taps A and B
$K_{B\text{-}C}$ = resistance factor between pressure taps B and C
$K_{B\text{-}D}$ = resistance factor between pressure taps B and D
$K_{C\text{-}D}$ = resistance factor between pressure taps C and D
$L_{A\text{-}B}$ = length between taps A and B, ft
$L_{B\text{-}C}$ = length between taps B and C, ft
$L_{B\text{-}D}$ = length between taps B and D, ft
$L_{C\text{-}D}$ = length between taps C and D, ft
M = molecular weight of gas
M_1 = Mach number at pipe entrance
M_a = molecular weight of air
M_w = molecular weight
M_{tap} = Mach number at pressure tap
N_{Re} = Reynolds number
P = static pressure, psia
P_1 = pressure at pipe entrance
P_b = barometric pressure, psia
P_m = static pressure at the meter calorimeter, psia
P_{set} = set pressure, psig
P_f = flow rating pressure, psia
P_o = back pressure, psig
P_B = base pressure, psia
P_s = meter inlet stagnation pressure, psia
P_{tapA} = pressure @ tap A, psia
P_{tapB} = pressure @ tap B, psia
P_{tapC} = pressure @ tap C, psia
P_{tapD} = pressure @ tap D, psia
Q = relieving capacity in gpm of water at reference condition, (US. gallons) (gpm)
R = gas constant, 1545.4/M, ft-lbf/lbm-°R
R_d = throat Reynolds number
R_D = Reynolds number referred to internal diameter of meter run pipe, D
S_g = specific gravity (ideal)
T = temperature, °R
T = fluid temperature, °F
T_1 = temperature at pipe entrance
T_b = base temperature, absolute, °R
T_m = fluid temperature at the meter, °F
T_m = temperature upstream of the meter, °F
T_o = base temperature, °R
T_v = fluid temperature, °F
T_s = meter inlet stagnation temperature, absolute, °R
T_v = temperature at the valve inlet, absolute, °R
T_r = reference temperature at the valve inlet, absolute °R
T_{cal} = fluid temperature at the calorimeter, °F
$T_{cal}'_{\ Drum}$ = fluid temperature at the test drum calorimeter, °F
$T_{cal,\ meter}$ = fluid temperature at the meter calorimeter, °F
T_{tap} = temperature at pressure tap, °R
T_B = base temperature, °F
V_{act} = specific volume at inlet conditions, ft^3/lbm
$V_{act}'_{\ Drum}$ = specific volume at inlet conditions, ft^3/lbm
$V_{act,\ meter}$ = specific volume at flowing conditions at the meter, ft^3/lbm
V_{ref} = specific volume at reference condition, ft^3/lbm
$V_{ref,\ Drum}$ = specific volume at reference condition, ft^3/lbm
$V_{ref,\ meter}$ = specific volume at reference conditions at the meter, ft^3/lbm
V_{tap} = specific volume at pressure tap, ft^3/lbm
W = measured relieving capacity, lbm/sec
W_c = measured relieving capacity adjusted to the reference condition, lbm/hr
$W_{cal,\ drum}$ = test-drum calorimeter flow adjusted to the reference condition, lbm/hr
$W_{cal,\ meter}$ = meter calorimeter flow adjusted to the reference condition, lbm/hr
W_{dc} = test-drum calorimeter flow, lbm/hr
W_h = flow rate, lbm/hr
W_h = measured relieving capacity adjusted to the reference condition, lbm/hr
W_{mc} = meter calorimeter flow, lbm/hr
W_r = relieving capacity adjusted to water at reference condition, lbm/hr
W_t = trial flow rate, lbm/hr
Y = expansion factor
Y_{tap} = expansion factor at pressure tap
Z = compressibility factor as defined in the equation of state, $PV = ZRT$.
Z_b = base compressibility factor
β = beta ratio ($\beta = d/D$)
ρ = fluid density, lbm/ft^3
ρ_{act} = density of water at inlet conditions, lbm/ft^3
ρ_m = fluid density at meter inlet, lbm/ft^3

Copyright ASME International
Provided by IHS under license with ASME
No reproduction or networking permitted without license from IHS

ρ_{ref} = density of water at reference condition, lbm/ft^3

ρ_s = density of dry air at 14.696 psia and at the base temperature, lbm/ft^3

ρ_{std} = density of dry air at 14.696 psia and reference temperature, lbm/ft^3, (ρ_{std})

ρ_B = density at base temperature and pressure

μ = viscosity, lbm/ft-sec

μ = viscosity of air at T_B and T_B (centipoise)

ΔP = differential pressure head across meter, inches water

$\Delta P_{A\text{-}B}$ = differential pressure between taps A and B, psia

$\Delta P_{B\text{-}C}$ = differential pressure between taps B and C, psia

$\Delta P_{C\text{-}D}$ = differential pressure between taps C and D, psia

ϕ_i = ideal gas sonic-flow functions

Copyright ASME International
Provided by IHS under license with ASME
No reproduction or networking permitted without license from IHS

PART I
FLOW CAPACITY TESTING

(Part I includes the preceding Sections 1 and 2 in addition to the subsequent Sections 3 through 6 and appendicies.)

SECTION 3
GUIDING PRINCIPLES

3.1 ITEMS ON WHICH AGREEMENT SHALL BE REACHED

The parties to the test shall reach agreement on the following items prior to conducting the test:

(a) object of the test

(b) parties to the test

(c) test site

(d) testing fluid reference condition at flow-rating pressure

(e) methods of measurement, instrumentation, and equipment to be used (calibration of instruments shall be in accordance with para. 3.7)

(f) number, size, type, condition, source, set pressure, and expected relieving capacity of the device(s) to be tested

(g) person who shall supervise the test

(h) the written test procedure which shall include the observations and readings to be taken and recorded to comply with the object or objectives of the test

3.2 QUALIFICATION OF PERSON SUPERVISING THE TEST

A person who supervises the test shall have a formal education in thermodynamics and fluid mechanics. In addition, the person shall have practical experience in fluid flow measurement and have had experience in test supervision.

3.3 RESPONSIBILITY OF PERSON SUPERVISING THE TEST

The person supervising the test shall be present at all times during the test and shall be solely responsible to ensure that all persons who are involved in taking readings, making pressure and temperature adjustments, or any other function that will affect the test results are fully informed as to the correct method of performing such functions. The person supervising the test shall also be responsible to ensure that the written test procedures are followed. The person supervising the test shall sign and date the test report, thereby verifying to the best of his knowledge that the report is correct and that the test was conducted in accordance with the written test procedures.

The person supervising the test shall be responsible for the calibration of instruments as required by para. 3.7.

3.4 TEST APPARATUS

Procedures and arrangement of the test apparatus shall be in accordance with Section 4.

3.5 PRELIMINARY TESTS

Sufficient preliminary tests shall be conducted to ensure that test conditions can be attained and that operating personnel are completely familiar with the test equipment and with their respective assignments. Preliminary tests shall include the recording of all data necessary to the completeness of an actual test.

3.6 SPARE INSTRUMENTS

If intended for use as replacements during the test, spare instruments shall be calibrated in accordance with para. 3.7.

Copyright ASME International
Provided by IHS under license with ASME
No reproduction or networking permitted without license from IHS

3.7 CALIBRATION OF INSTRUMENTS

Each instrument used during the test shall be serialized or otherwise positively identified. Each instrument, depending on the type, shall be calibrated in accordance with the following schedule outlined in this Section. Records of pertinent instrument calibrations shall be available for review by the interested parties.

3.7.1 Pressure. Pressure-measuring instruments shall be calibrated in accordance with ASME PTC 19.2, Pressure Measurements, before and after any test or series of tests. Calibration of other means of indicating or recording pressure shall be agreed upon by the interested parties.

3.7.2 Temperature. Temperature-measuring instruments shall be calibrated in accordance with ASME PTC 19.3, Temperature Measurement. Instruments of the types listed in para. 4.2.2(a), except bimetallic thermometers, shall be calibrated against at least one temperature within a 90-day period preceding the test or series of tests. Bimetallic thermometers shall be calibrated before and after each test or series of tests. Calibration of other means of indicating or recording temperature shall be agreed upon by the interested parties.

3.7.3 Lift Indicators and Recorders. ASME PTC 19.14, Linear Measurements, gives no recommendation regarding calibration of these instruments. However, since a check of their accuracy is relatively simple, and since they are usually subjected to some shock in the course of tests under this Code, their accuracy shall be checked before and after each test or series of tests.

3.7.4 Weighing Scales. While ASME PTC 19.5.1, Weighing Scales, does not include spring and hydrostatic types, it is not the intent of this subparagraph to exclude their use, where appropriate, under this Code. Appropriate use is considered to include the weighing of condensate collected in a test vessel. Scales used in test procedures for weighted condensate or gravimetric methods shall have a minimum value of the indicating element equal to or less than 0.25% of the expected load. Weighing scales used in tests conducted under this Code shall be calibrated at sufficient points to ensure their accuracy within their range of intended usage at least once within a 90-day period preceding a test or series of tests.

3.7.5 Steam Calorimeters. Methods of calibrating steam calorimeters are given in ASME PTC 19.11, Water and Steam in the Power Cycle. The calorimeters shall be calibrated separately with steam at the time of their installation and at regular intervals not exceeding 6 months. Further calibrations shall be carried out if results indicate an obvious error in their readings or if their installation is altered.

3.8 METERING SECTIONS

The calibration of any type of flow meter (see para. 4.2.4) shall include the actual piping and all fittings both upstream and downstream of the meter (see ASME PTC 19.5), including control valves, test vessel, and vessel-to-test device adapters. Such calibration shall be by means of measuring the flow rate through a test device with a known coefficient of discharge upon completion of the initial installation or construction and prior to the performance of any formal test. Agreement with the coefficient of the test object shall be within ±2%.

The initial calibration shall include runs at the smallest, intermediate, and highest flow rates compatible with the comparison installation. Adapter fittings for test devices having different types of inlet connections shall be calibrated by laboratory personnel at the time of their manufacture or purchase. In addition, the meter installation shall be recalibrated as above at least once within each 5-year period. These recalibrations shall include runs with at least two sizes of adapters. Records of calibrations shall be maintained and shall be available for review by the interested parties. Modifications to the equipment shall be evaluated for the effect they may have on the system calibration and new calibrations shall be performed if deemed necessary.

3.9 FLOW RESISTANCE TEST RIGS

The calibration of any type of test rig (see para. 4.9.1) shall include the actual piping and all fittings downstream of the test vessel (Fig. 2). Calibration shall be conducted upon completion of the initial installation or construction and prior to the performance of any formal test and be repeated at least once every 5 years. Records of calibration shall be maintained and shall be available for review by the interested parties. Modifications to the equipment shall be evaluated for the effect they have on the test rig and new calibrations shall be performed if

Copyright ASME International
Provided by IHS under license with ASME
No reproduction or networking permitted without license from IHS

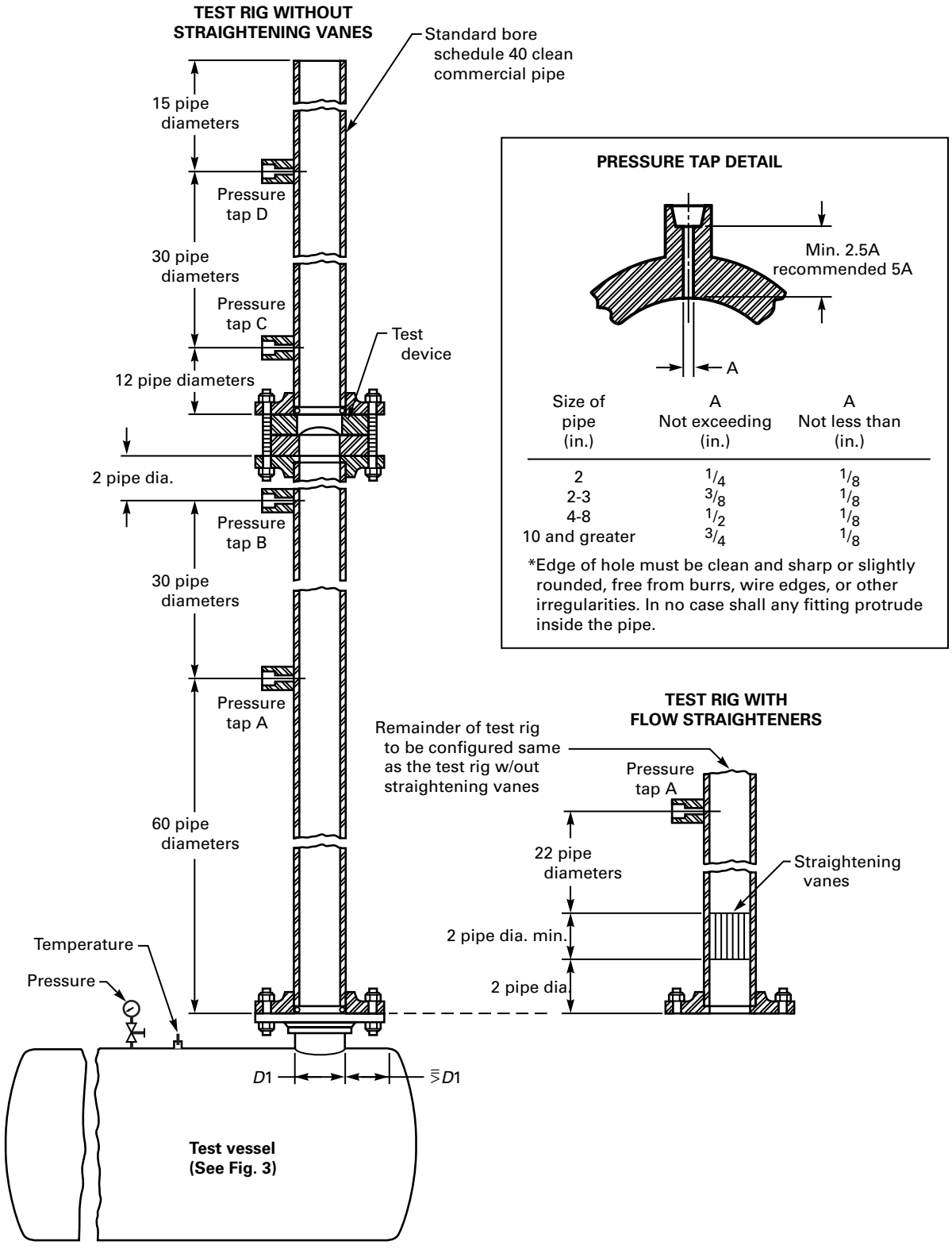

FIG. 2 RECOMMENDED ARRANGEMENTS FOR TESTING NONRECLOSING PRESSURE RELIEF DEVICE FLOW RESISTANCE

Copyright ASME International
Provided by IHS under license with ASME
No reproduction or networking permitted without license from IHS

deemed necessary. The calibration shall be conducted per paras. 3.9.1 and 3.9.2

3.9.1 Measured Flow Resistance. With no test device installed, conduct 3 flow resistance tests at the smallest, intermediate, and highest test pressures compatible with the test rig. The measured flow resistance, K_{Ri}, for each test shall be 0 ±.075.

3.9.2 Pressure Tap Profile Comparison. With no test device installed, conduct a flow test at an intermediate test pressure.

(a) With the data from the flow test, calculate the average friction factor for the length of pipe between taps A-B and taps C-D.

(b) Using the Lapple and Levenspiel model of the adiabatic ideal-gas integration of the mechanical energy (or momentum) balance for adiabatic flow from an ideal nozzle on a large reservoir, through an equivalent length of pipe, to a second large reservoir (or to the atmosphere), calculate the equivalent pipe length to tap A using the measured flow rate, the average friction factor from step (a), and the measured pressure at tap A.

(c) Subtract the actual pipe length from the test rig entrance to tap A from the equivalent pipe length from step (b) to determine a nozzle equivalent length.

(d) Repeat steps (b) and (c) for taps B, C, and D.

(e) Calculate the average nozzle equivalent length using the four values determined above. This average nozzle equivalent length is used to compensate for the actual pressure loss up to the test rig entrance.

(f) Using again the adiabatic ideal-gas integration model of step (b), calculate the pressure at tap A using the measured flow rate, the average friction factor, and the average nozzle equivalent length from step (e) and actual pipe length for tap A.

(g) Repeat step (f) for taps B, C, and D.

(h) Calculate the difference between the measured pressure and the calculated pressure from step (g) at each of the four pressure taps. The difference at each tap shall be within ± 6.0% of the calculated pressure.

3.10 ADJUSTMENTS DURING TESTS

No adjustment to the pressure relief device shall be made while readings are being taken. Following any change or deviation of the test conditions, a sufficient period of time shall be allowed to permit the rate of flow, temperature, and pressure to reach stable conditions before readings are taken.

3.11 RECORDS AND TEST RESULTS

The test records shall include all observations, measurements, instrument readings, and instrument calibration records (if required) used in the test. Original test records shall remain in the custody of the facility which conducted the test for a period not less than 5 years. Copies of all test records shall be furnished to each of the parties to the test. Corrections and corrected values shall be entered separately in the test record. The test shall be reported in accordance with Section 6, Test Summary Report Form.

3.12 MEASUREMENT UNCERTAINTY

A post-test uncertainty analysis shall be performed to determine that the limits of uncertainty of the final flow measurement specified in Section 1 were met. A pretest determination may be performed to determine that the limits of uncertainty of the final flow measurement specified in Section 1 can be met by the specified instrument and procedures. A guide for such determination is given in ASME PTC 19.1, Test Uncertainty. These determinations shall be documented by the laboratory and available for review.

Copyright ASME International
Provided by IHS under license with ASME
No reproduction or networking permitted without license from IHS

SECTION 4
INSTRUMENTS AND METHODS OF MEASUREMENTS

4.1 GENERAL

This Section describes the instruments, methods, procedures, and precautions that shall be used in testing pressure relief devices under this Code. The Performance Test Code Supplements on Instruments and Apparatus provide authoritative general information concerning instruments and their use, and may be consulted for such information.

4.2 FLUID CONDITIONS, TEST CONDITIONS, AND INSTRUMENTATION

4.2.1 Atmospheric Pressure. Barometric pressure shall be measured with a barometer (see ASME PTC 19.2). In calculations involving the capacity of pressure relief devices having a flow-rating pressure of 20 psig or higher, the use of the mean barometric pressure at the test site satisfies the accuracy requirements of this Code. In such cases, the recorded pressure may be the mean barometric pressure.

4.2.2 Temperature. Instructions on thermometers or thermocouples and associated instruments are given in ASME PTC 19.3, except that commercial metal-encased thermometers shall not be used in tests conducted under this Code. Other means of temperature measurement and indication may be used, provided they are of the same or greater degree of accuracy as for those described therein.

(a) Depending on operating conditions, or convenience, the temperature may be measured with certified or calibrated liquid-in-glass thermometers, bimetallic thermometers, resistance-type thermometers, or thermocouples. All of the above may be inserted directly into the pipe or into wells except for liquid-in-glass thermometers, which must be inserted into wells. The installation of the temperature-measuring device directly into the pipe, without the addition of a well, is desirable for temperatures below 300°F.

(b) The following precautions shall be taken when making any temperature measurements.

(1) No significant quantity of heat shall be transferred by radiation or conduction to or from the temperature-measuring device other than by the temperature of the medium being observed (see ASME PTC 19.3).

(2) The immediate vicinity of the point of insertion and the external projecting parts shall be insulated.

(3) The temperature-measuring device shall extend across the center line in pipes of small diameter or shall be inserted at least 6 in. into the fluid stream in pipes over 12 in. in diameter.

(4) Temperature-measuring devices installed in pipes carrying compressible fluids shall, wherever possible, be installed at locations where the maximum fluid velocity during any flow measurement does not exceed 100 ft/sec. Where such an installation is not possible, it may be necessary to correct the temperature readings to the appropriate static or total temperature (see ASME PTC 19.5).

(5) The temperature-measuring devices shall be inserted in locations so as to measure temperatures which are representative of the flowing medium as described under test arrangements.

(c) When measuring temperatures with a mercury-in-glass thermometer, the instrument shall have an etched stem. When the measured temperature differs from the ambient by more than 10°F, and the mercury is exposed, an emergent stem correction shall be made (see ASME PTC 19.3) or an appropriate emergent-stem thermometer used.

(d) Thermometer wells, when used, shall be of the type shown in ASME PTC 19.3. They shall be as thin-walled and of as small diameter as practicable; their outer surfaces shall be substantially free from corrosion or foreign matter. The well shall be filled with a suitable fluid. Mercury should not be used for this fluid since its very low vapor pressure presents a serious health hazard to personnel. However, if mercury is used for this purpose, suitable precautions must be taken.

(e) Thermocouples, if employed, shall have a welded hot-junction and must be calibrated together with their extension wires over the anticipated op-

Copyright ASME International
Provided by IHS under license with ASME
No reproduction or networking permitted without license from IHS

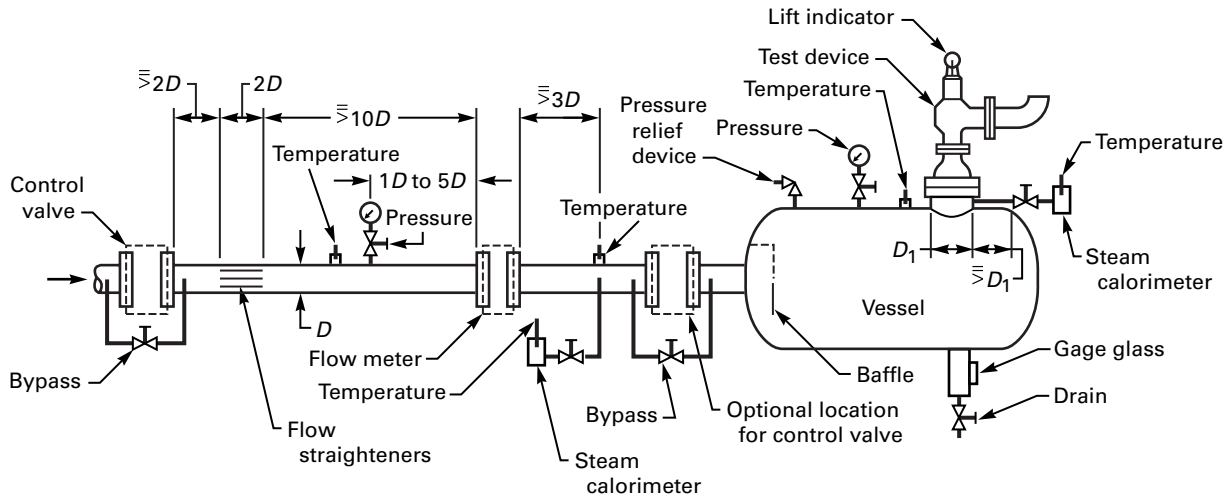

FIG. 3 RECOMMENDED ARRANGEMENTS FOR TESTING DEVICES WITH ATMOSPHERIC BACK PRESSURE — FLOW-METER TEST ARRANGEMENT

erating range. They shall be constructed of materials suitable for the temperature and for the fluid being measured. The electromotive force of a thermocouple shall be measured by a potentiometer instrument or millivoltmeter of such precision that the accuracy of the overall system is within the limit specified in para. 1.3. The cold junction shall be established by an ice bath, reference standard, or by a compensating circuit built into the potentiometer.

4.2.3 Pressure Measurements. Instructions on pressure gages, differential gages, and manometers are given in ASME PTC 19.2. Other means of pressure measurements and indication may be used provided they are of the same or lesser degree of uncertainty as those described therein.

(a) Pressure-measuring stations shall be located in the region where the flow is essentially parallel to the pipe or vessel wall. For the measurement of static gage-pressure differentials below 15 psi, liquid manometers may be used.

(b) The test vessel pressure shall be the static pressure as measured with a pressure tap positioned, as shown in Fig. 3.

(c) Back pressure shall be the static pressure measured with a pressure tap positioned, five pipe diameters from the valve outlet.

(d) Proper corrections to the pressure readings shall be made if there is a height of water or other liquid between the point at which the pressure is to be measured and the pressure instrument.

4.2.4 Flow Measurement

(a) This Section provides for the measurement of pressure relief device capacity by use of the following methods:

(1) subsonic-inferential meters, including orifice plate, flow nozzle, and venturi

(2) sonic-inferential meters, including choked nozzles

(3) direct volumetric or gravimetric measurement of collected condensate or discharge

(b) To measure pressure relief device capacity, the following methods shall be used:

(1) steam flow, with atmospheric back pressure method (a)(1) or (3) above

(2) steam flow, with back pressure above atmospheric method (a)(1) above

(3) gas or air flow, with atmospheric back pressure method (a)(1) or (2) above

(4) gas or air flow, with back pressure above atmospheric method (a)(1) above

(5) liquid flow, with atmospheric back pressure method (a)(1) or (3) above

(6) liquid flow, with back pressure above atmospheric method (a)(1) above

NOTE: It is not the intent of the Section to exclude pressure-relief-device testing at back pressures above atmospheric wherein capacity is measured by means of a sonic inferential meter. However, due to the high degree of pressure drop through this type of meter, such testing would probably be impractical.

Copyright ASME International
Provided by IHS under license with ASME
No reproduction or networking permitted without license from IHS

(c) Instruction on Primary Elements. Instructions on primary elements are given in ASME PTC 19.5. Other means of capacity determinations may be used [see para. 4.3.1(c)], provided they are of the same or greater degree of accuracy as for those outlined therein.

(1) The primary element shall be located upstream of the test pressure relief device inlet. A recommended installation arrangement is shown in Fig. 3. The ratio of orifice plates to internal pipe diameter shall be between 0.2 and 0.7. The primary element shall be inspected and shall be known to be clean and free of damage prior to the test period.

(2) The differential pressure across the primary element and the temperature of the fluid shall be measured. The precautions of para. 4.2.2 shall apply to the measurement of temperature, and those of para. 4.2.3 to the measurement of pressure.

(3) There shall be sufficient length of straight pipe ahead of the primary element to secure a fairly uniform velocity profile in the approaching stream (see ASME PTC 19.5). To ensure reliable pressure measurement, there shall also be a sufficient length of straight pipe of the same nominal size as the inlet on the outlet side of the primary element.

(4) The flow during capacity measurements shall be steady-state and differential pressure devices shall not show total pulsations (double amplitude) greater than 2% of the differential pressure being measured. Any greater pulsation in the flow shall be corrected at its source; attempts to reduce pulsations at the instrument are not permissible.

(5) Precautions shall be taken to avoid the use of excessively wet steam which usually results in unstable conditions. When testing with steam, throttling calorimeters shall be used (see para. 4.2.6).

(6) ASME Supplement 19.5–1971, Fluid Meters, Part 2 provides detailed information relative to most of the flow techniques and flow elements recommended for this Code. The equations for the calculation of discharge coefficients for orifices, flow nozzles, and Venturi meters contained in the supplement have been superseded by those given in ASME MFC-3M-1989, Measurement of Fluid Flow in Pipes Using Orifice, Nozzle, and Venturi, and should be used. Some copies of the ASME 1971 supplement contain errata sheets showing some of the new equations and their limits.

(a) Orifices: (Beta ratios between 0.20 and 0.75) Pipe Reynolds number (R_D between 10^4 and 10^8) Flange Taps.

Pipe inside diameter less than or equal to 2.308 in.:

$$C = 0.5959 + 0.0312\beta^{2.1} - 0.1840\beta^{8} + 0.039\beta^{4}/(1-\beta^{4}) - 0.0337\beta^{3}/D + 91.71\beta^{5/2}/R_D^{3/4} \quad \text{(a)}$$

Pipe inside diameter greater than 2.308 in.:

$$C = 0.5959 + 0.0312\beta^{2.1} - 0.1840\beta^{8} + 0.0900\beta^{4}/[D(1-\beta^{4})] - 0.0337\beta^{3}/D + 91.71\beta^{5/2}/R_D^{3/4} \quad \text{(b)}$$

D and *D*/2 Taps (all pipe sizes)

$$C = 0.5959 + 0.0312\beta^{2.1} - 0.1840\beta^{8} + 0.039\beta^{4}/(1-\beta^{4}) - 0.01584\beta^{3} + 91.71\beta^{5/2}/R_D^{3/4} \quad \text{(c)}$$

(b) Flow Nozzles: Wall Taps (Beta ratios between 0.20 and 0.70) throat Reynolds numbers (R_d from 10^4 to 10^6)

$$C = 0.9975 - \frac{6.53}{R_d^{1/2}} \quad \text{(d)}$$

For throat Reynolds numbers greater than 10^6

$$C = 0.9975 - \frac{0.1035}{R_d^{1/5}} \quad \text{(e)}$$

4.2.5 Valve-Lift Indicator. Instructions for use of lift indicators are given in ASME PTC 19.14. Other means of linear measurement and indication may be used provided they introduce the same or less measurement uncertainty as for those described therein.

(a) The lift of the valve disk, under flowing conditions, shall be determined by suitable means to whatever degree of accuracy is imposed by the procedure under which the valve is being tested.

(b) In open- or vented-bonnet designs, when the top of the spindle may be exposed during the tests, a dial indicator of appropriate range may be attached to the top of the valve to indicate the movement of the spindle. In closed-bonnet valves where the top of the spindle cannot be exposed, arrangements shall be made to permit indicating, reading, or recording spindle movement outside the valve bonnet or cap. In either case, care must be exercised that the arrangement does not impose an additional

Copyright ASME International
Provided by IHS under license with ASME
No reproduction or networking permitted without license from IHS

load on the valve spindle or interfere with the operation of the valve.

Possible misreading of lift indicators may occur under conditions of testing valves with steam with superimposed back pressure (para. 4.6). When introducing steam into the back-pressure portion of the valve, the temperature of the steam may cause thermal expansion of the valve parts, producing an erroneous initial reading on the lift indicator. When extreme accuracy in results is desired, measures shall be taken to distinguish between this thermal expansion and actual valve lift.

4.2.6 Steam Quality. Quality of steam flowing shall be measured by means of throttling calorimeters, installed in the test vessel nozzle, with the tube extending to the test device centerline. Alternatively, the steam-sampling tube may be installed directly on the vessel, provided that the tube extends into the flow path directly below the center line of the device inlet nozzle, and not lower than the horizontal center line of the test vessel. Instructions for their use are given in ASME PTC 19.11.

4.2.7 Reference Conditions for Which Corrections May Be Applied

(a) Steam. The reference condition shall be dry saturated steam, and the condition of the steam during test at the device inlet shall be within limits of 98% minimum quality and 20°F maximum superheat.

(b) Water. The reference condition of water shall be between 65°F and 75°F, and the temperature limit of water during test at the device inlet shall be between 40°F and 125°F.

(c) Air and Other Gases. The reference condition of air or other gases shall be between 55°F and 75°F, and the temperature limit of air or other gases during test at the device inlet shall be between 0°F and 200°F.

(d) If reference conditions are not within the above stated limits, then no corrections from actual test conditions may be applied. Furthermore, no corrections shall be made from actual test pressure.

4.2.8 Specific Gravity. The specific gravity of the fluid, other than air or water, used for the test shall be determined in accordance with "Tests for Specific Gravity of Gaseous Fuels" (ASTM D 1070) or with "Density, Specific Gravity or API Gravity of Crude Petroleum and Liquid Petroleum Products by Hydrometer Method" (ASTM D 1298).

NOTE: In some special cases, it may be a requirement that tests be conducted on liquids outside the range of these specifications. In these cases, agreement shall be reached on the method of specific gravity (density — specific volume) determination.

4.2.9 Chemical Composition. If the physical properties of the fluid are in doubt (see para. 1.2.1), they shall be determined by physical tests or from chemical analysis.

4.2.10 General Features of Tests. The proper number and size of pressure relief devices to be tested shall be provided at the test site. There shall be assurance that the pressure relief devices are properly assembled with components that meet the design specification requirements. The pressure relief device shall be clean and ready for test.

The pressure relief device to be tested shall be installed with adapter fittings (flanged, screwed, welded, etc.), (see Fig. 4 for acceptable contours), directly on a test vessel. Other adapter fittings may be used provided the accuracy of the test is not affected. The diameter and volume of the test vessel should be large enough to obtain an accurate static pressure measurement and an accurate determination of the operational characteristics of the pressure relief device to be tested. Operating conditions shall be maintained in accordance with the requirements of the procedure used (see paras. 4.3 through 4.9). The duration of the test shall be that required to obtain the necessary performance and capacity data under stable conditions.

(a) For testing with atmospheric back pressure before discharging, the test arrangement shall provide discharge from the pressure relief device directly to the atmosphere or condenser (see Figs. 3, 5, and 6). If discharge piping is used, it shall be at least the same size as the pressure relief device outlet. This pipe shall be supported independently of the pressure relief device and in such a way as to not affect the operation of the pressure relief device. Precautions must be taken to ensure that the pressure relief device and discharge piping is adequately secured to resist the resultant forces generated by the discharge.

(b) For testing with superimposed back pressure before discharging, the test arrangement shall provide a means for introducing and maintaining back pressure on the test pressure relief device outlet (see Fig. 7). The discharge pipe shall have at least the same nominal size as the pressure relief device outlet and shall discharge into a system of sufficient

Copyright ASME International
Provided by IHS under license with ASME
No reproduction or networking permitted without license from IHS

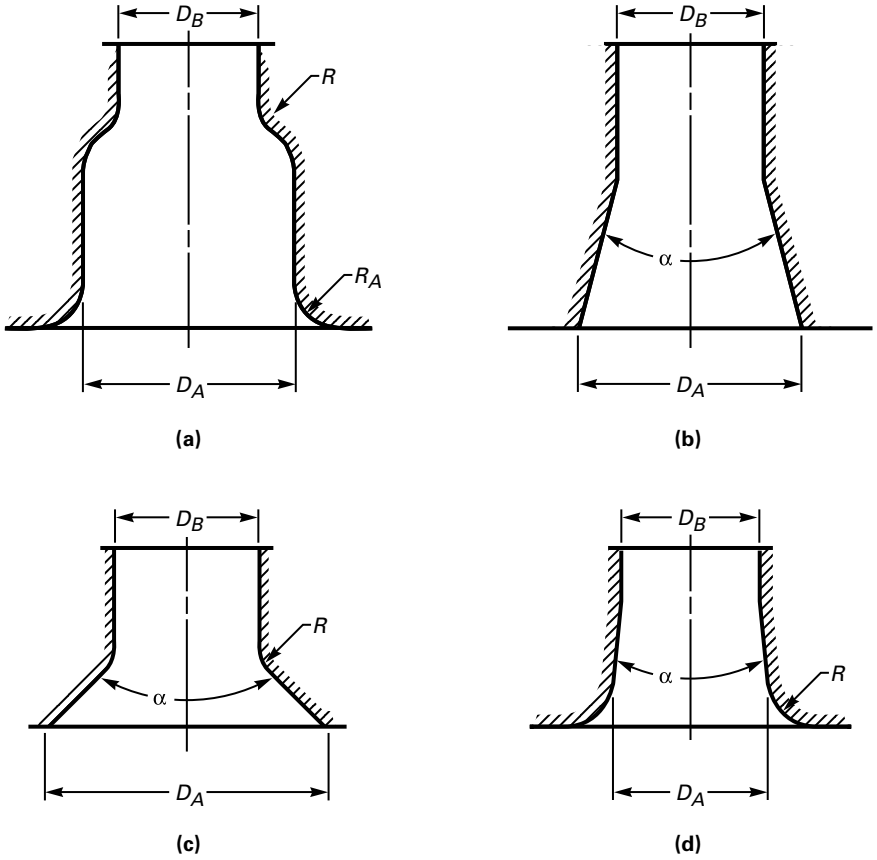

For sketch (a) —If $D_B \geq 0.75\ D_A$, then $R_A \geq 0.25\ D_A$
If $D_B < 0.75\ D_A$, then $R \geq 0.25\ D_B$

For sketch (b) —If $\alpha \leq 30$ deg and $D_B < 0.75\ D_A$, break all edges

For sketch (c) —If $\alpha \leq 30$ deg and $D_B < 0.75\ D_A$, then $R \geq 0.25\ D_B$

For sketch (d) — If $\alpha \leq 30$ deg and $D_B \geq 0.75\ D_A$, then $R_A \geq 0.25\ D_A$

GENERAL NOTE: In no case shall the size of the fitting exceed the size of the connection on the test vessel.

FIG. 4 RECOMMENDED INTERNAL CONTOURS OF FITTINGS, ADAPTER, AND REDUCERS BETWEEN TEST VESSEL AND TEST DEVICE

size to allow satisfactory back-pressure control. A control pressure relief device shall be provided to regulate the building up and maintaining of any desired back pressure while the pressure relief device is discharging.

The remainder of this Section is divided into seven parts according to the back pressure, fluid used, and type of device tested. The first three parts for tests with atmospheric back pressure before discharging are: steam (para. 4.3); gases (including air) (para. 4.4); and liquids (para. 4.5). The second three parts for test with superimposed back pressure before discharging are: steam (para. 4.6); gases (including air) (para. 4.7); and liquids (para. 4.8). The last part (para. 4.9) concerns testing rupture disks to determine resistance factors.

(c) Tests of nonreclosing pressure relief devices in combination with pressure relief valves shall be

Copyright ASME International
Provided by IHS under license with ASME
No reproduction or networking permitted without license from IHS

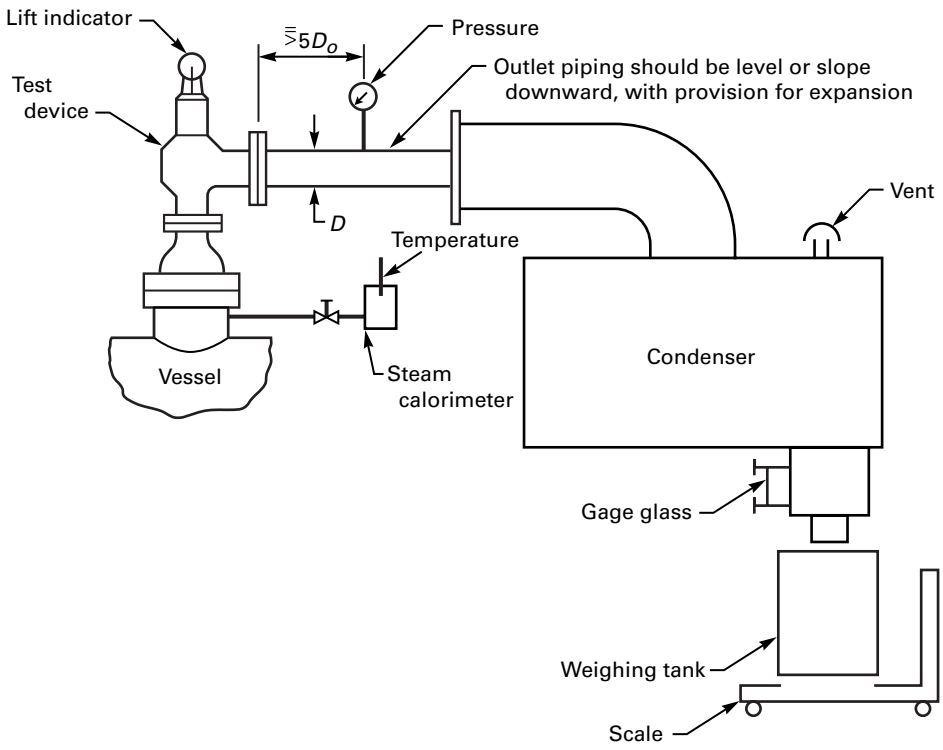

FIG. 5 RECOMMENDED ARRANGEMENTS FOR TESTING DEVICES WITH ATMOSPHERIC BACK PRESSURE — WEIGHED-CONDENSATE TEST ARRANGEMENT

conducted in accordance with paras. 4.3 through 4.8 (see Fig. 8).

4.3 TESTING WITH STEAM, PRESSURE RELIEF DEVICE DISCHARGING TO ATMOSPHERIC PRESSURE

4.3.1 Test Arrangements

(a) Flow-Meter Method. Figure 3 illustrates the use of a flow meter together with its associated instrumentation. The use of calorimeters at the pressure relief devices inlet and at the primary element is mandatory; however, the thermometers at the primary element and at the test vessel may be omitted. Provisions shall be made for collecting and measuring the condensate accumulating in the test vessel during a test run.

(b) Weighed Condensate. Figure 5 illustrates the weighed-condensate method of test, including the condenser and associated instrumentation. The use of a calorimeter at the device inlet is mandatory.

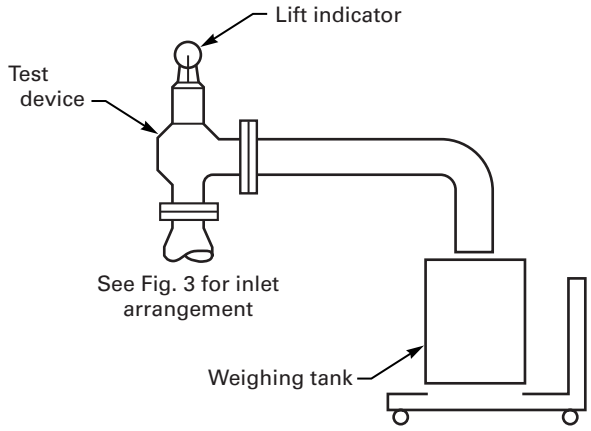

FIG. 6 RECOMMENDED ARRANGEMENTS FOR TESTING DEVICES WITH ATMOSPHERIC BACK PRESSURE — WEIGHED-WATER TEST ARRANGEMENT

Copyright ASME International
Provided by IHS under license with ASME
No reproduction or networking permitted without license from IHS

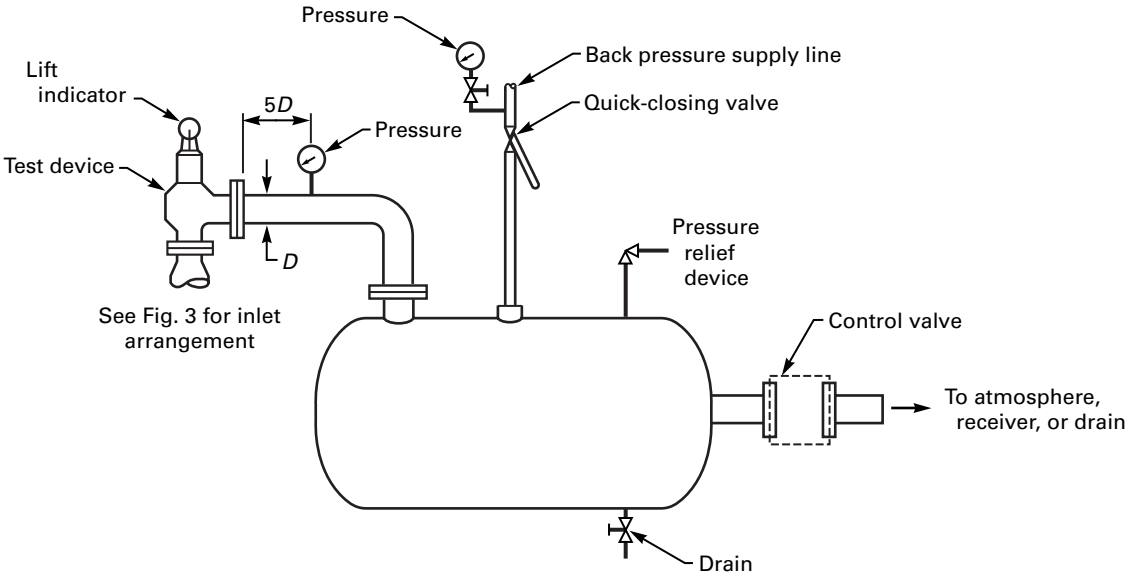

FIG. 7 RECOMMENDED DISCHARGE ARRANGEMENTS FOR TESTING DEVICES WITH SUPERIMPOSED BACK PRESSURE

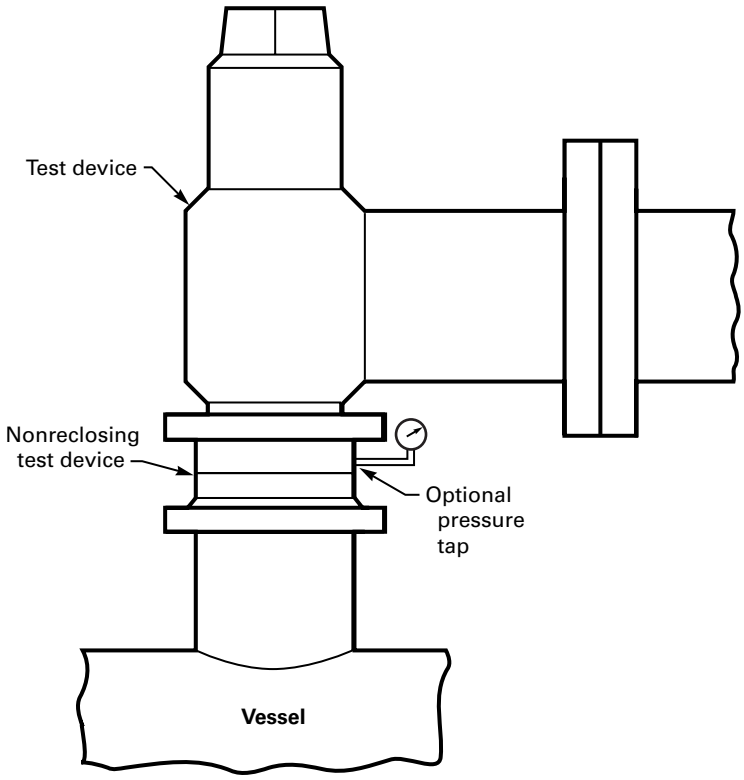

FIG. 8 RECOMMENDED ARRANGEMENT FOR TESTING NONRECLOSING PRESSURE RELIEF DEVICES IN COMBINATION WITH PRESSURE RELIEF VALVES

Copyright ASME International
Provided by IHS under license with ASME
No reproduction or networking permitted without license from IHS

NOTE: If the test pressure relief device is of the open- or vented-bonnet design, this test arrangement will not measure all the steam passing through the pressure relief device. A loss may occur due to steam leakage around the spindle and through drains. Therefore, the capacity results obtained by test will be less than the actual device capacity. When considered necessary by the interested parties, agreement shall be reached as to the method used for determining the rate of this steam leakage.

(c) Other test arrangements may be used if agreed to by all interested parties, provided the uncertainty of the final results is within ±2.0% (see para. 1.1).

4.3.2 Preliminary Tests. Preliminary tests may be permitted for testing and adjusting operation of the test apparatus and/or device being tested (see para. 3.5). Such tests may be necessary to ensure the absence of leaks in the test apparatus and that primary element reservoirs are filled, properly cooled, and initially vented.

4.3.3 Barometric Pressure. Record the barometric pressure (see para. 4.2.1).

4.3.4 Details of Procedure for Flow Measurement of Devices Using the Flow-Meter Method

(a) Increase the pressure at the device inlet. During the interval starting at 90% of the expected set pressure, the rate of pressure increase shall not exceed 2.0 psi/sec, or whatever lesser rate of increase is necessary for the accurate reading of the pressure. Observe and record the set pressure of the device and any other desired or pertinent characteristics.

(b) For reclosing pressure relief devices, continue increasing the pressure at the device inlet until the device remains open. Observe the action of the device. Gradually decrease the inlet pressure and observe the action of the device.

(c) For reclosing pressure relief devices, repeat (a) and (b), recording set and reseating pressures until both are established and stabilized. These values are established by computing the average of at least the last three measured values. Set pressure and blowdown are considered stable when the measured values show no consistent upward or downward trend and all are within ±1% or ±0.5 psi, whichever is greater, of the average value. If the parties to the test agree, an alternative criteria of stability may be used.

(d) Establish and maintain the flow-rating pressure until flow instruments indicate stable condition.

(e) Close test-drum drain and establish and record or mark starting condensate level in gage glass.

(f) Record the following:

(1) device-inlet pressure

(2) device-inlet-calorimeter-discharge temperature

(3) device-disk lift, as applicable

(4) flow-meter static pressure

(5) flow-meter differential pressure

(6) flow-meter calorimeter discharge temperature

(g) Maintain conditions stable and read and record data in same sequence for period of run as agreed upon.

(h) Record length of run and times of recording data as measured by stopwatch, electric synchronous clock with second hand, or other appropriate means.

(i) Determine test vessel condensate by weight or volume measure, and record.

(j) Decrease inlet pressure slowly and again record reseating pressure of a reclosing pressure relief device.

4.3.5 Details of Procedure for Flow Measurement of Device Using the Weighed-Condensate Method

(a) Increase the pressure at the device inlet. During the pressure interval starting at 90% of the expected set pressure, the rate of pressure increase shall not exceed 2.0 psi/sec, or whatever lesser rate of increase is necessary for the accurate reading of the pressure. Observe and record the set pressure of the device and any other desired or pertinent characteristics.

(b) For reclosing pressure relief devices, continue increasing the pressure at the device inlet until the device remains open. Observe the action of the device. Gradually decrease the inlet pressure until the valve closes. Record the reseating pressure of the valve. Observe the action of the valve.

(c) For reclosing pressure relief devices, repeat (a) and (b), recording set and reseating pressures until both are established and stabilized. These values are established by computing the average of at least the last three measured values. Set pressure and blowdown are considered stable when the measured values show no consistent upward or downward trend and all are within ±1% or ±0.5 psi, whichever is greater, of the average value. If the parties to the test agree, an alternative criteria of stability may be used.

(d) Establish and maintain flow-rating pressure until flow instruments indicate stable condition.

(e) Establish condenser hot-well level.

(f) Record the following:

Copyright ASME International
Provided by IHS under license with ASME
No reproduction or networking permitted without license from IHS

(1) device-inlet pressure

(2) device-inlet calorimeter discharge temperature

(3) device-disk lift, as applicable.

(g) Maintain conditions stable and read and record data in same sequence for period of run as agreed upon.

(h) Record length of run and times of recording data as measured by stopwatch, electric synchronous clock with second hand, or other appropriate means.

(i) Reestablish condenser hot-well level and accurately determine and record amount (volume or weight) of condensate formed in condensers during run.

(j) Decrease inlet pressure slowly and again record reseating pressure of a reclosing pressure relief device.

4.3.6 Observation of the Device Mechanical Characteristics. During the flow-meter and weighed-condensate methods of test, the mechanical characteristics shall be observed by hearing, feeling, or seeing, and recorded during the flow test. If the valve chatters, flutters, or does not reseat (as designed) satisfactorily, such action shall be recorded. Upon agreement of all interested parties, the device may be readjusted, or repaired and retested.

4.3.7 Recording Additional Data. During the flow-meter or weighed-condensate methods of test, it may be desirable or a requirement to record pressure other than, or in addition to, those listed in para. 4.3.4 or 4.3.5. Where possible, such recorded pressures shall be identified in accordance with Appendix I. With closed discharge systems, such as para. 4.3.1(b), it is not possible to observe or record some characteristic pressures.

4.4 TESTING WITH GAS OR AIR, PRESSURE RELIEF DEVICE DISCHARGING TO ATMOSPHERIC PRESSURE

4.4.1 Test Arrangement. A recommended test arrangement is shown in the flow-meter test arrangement, Fig. 3. The primary element shall be either a subsonic-inferential meter [para. 4.2.4(a)(1)] or a sonic-inferential meter [para. 4.2.4(a)(2)].

Instrumentation for each type of meter is listed in the following subparagraphs. The test pressure relief device discharge may be provided as shown in Fig. 3. Refer to para. 4.2.10(a) for long discharge connections.

(a) Subsonic-Inferential Meters. Measurements associated with subsonic-inferential meters are

(1) inlet static pressure,

(2) inlet temperature, and

(3) differential pressure.

(b) Sonic-Inferential Meters. Measurements associated with sonic-inferential meters are

(1) inlet total (stagnation) pressure, and

(2) inlet total (stagnation) temperature.

4.4.2 Preliminary Device Tests. Preliminary tests may be permitted for testing and adjusting operation of the test apparatus and/or device being tested (see para. 3.5). Such tests may be necessary to ensure the absence of leaks in the test apparatus.

4.4.3 Barometric Pressure. Record the barometric pressure (see para. 4.2.1).

4.4.4 Details of Procedure for Flow Measurement of Devices Using Subsonic-Inferential-Meter Method

(a) Increase the pressure at the device inlet. During the pressure interval starting at 90% of the expected set pressure, the rate of pressure increase shall not exceed 2.0 psi/sec, or whatever lesser rate of increase is necessary for the accurate reading of the pressure. Observe and record the set pressure of the device and any other desired or pertinent characteristics.

(b) For reclosing pressure relief devices, continue increasing the pressure at the device inlet until the device remains open. Observe the action of the device. Gradually decrease the inlet pressure until the device closes. Record the reseating pressure of the device. Observe the action of the device.

(c) For reclosing pressure relief devices, repeat (a) and (b), recording set and reseating pressure until both are established and stabilized. These values are established by computing the average of at least the last three measured values. Set pressure and blowdown are considered stable when the measured values show no consistent upward or downward trend and all are within ±1% or ±0.5 psi, whichever is greater, of the average value. If the parties to the test agree, an alternative criteria of stability may be used.

(d) Establish and maintain flow-rating pressure until flow instruments indicate a steady-state condition.

Copyright ASME International
Provided by IHS under license with ASME
No reproduction or networking permitted without license from IHS

(e) Record the following:

(1) device-inlet pressure

(2) device-inlet temperature

(3) device-disk lift, as applicable

(4) flow-meter inlet static pressure

(5) flow-meter inlet temperature

(6) flow-meter differential pressure

(f) Decrease inlet pressure slowly and again record reseating pressure of the device.

4.4.5 Detail of Procedures for Flow Measurement of Devices Using Sonic-Inferential-Meter Method

(a) Increase the pressure at the device inlet. During the pressure interval starting at 90% of the expected set pressure, the rate of pressure increase shall not exceed 2.0 psi/sec, or whatever lesser rate of increase is necessary for the accurate reading of the pressure. Observe and record the set pressure of the device and any other desired or pertinent characteristics.

(b) For reclosing pressure relief devices, continue increasing the pressure at the device inlet until the device remains open. Observe the action of the device. Gradually decrease the inlet pressure until the device closes. Record the reseating pressure of the device. Observe the action of the device.

(c) For reclosing pressure relief devices, repeat (a) and (b), recording set and reseating pressures until both are established and stabilized. These values are established by computing the average of at least the last three measured values. Set pressure and blowdown are considered stable when the measured values show no consistent upward or downward trend and all are within ±1% or ±0.5 psi, whichever is greater, of the average value. If the parties to the test agree, an alternative criteria of stability may be used.

(d) Establish and maintain flow-rating pressure until flow instruments indicate a steady-state condition.

(e) Record the following:

(1) device-inlet pressure

(2) device-inlet temperature

(3) device-disk lift, as applicable

(4) flow-meter inlet total pressure

(5) flow-meter inlet total temperature

(f) Decrease inlet pressure slowly and again record reseating pressure of a reclosing pressure relief device.

4.4.6 Observation of the Mechanical Characteristics. During the subsonic or sonic-inferential-meter method of test, the mechanical characteristics shall be observed by hearing, feeling, or seeing, and recorded during the flow test. If the valve chatters, flutters, or does not reseat satisfactorily, such action shall be recorded. Upon agreement of all interested parties, the valve may be readjusted or repaired and retested. Excessive and continual chatter could cause mechanical failure of the valve and thereby create a hazard to personnel in the test area.

4.4.7 Recording Additional Data. During the subsonic or sonic-inferential-meter method of test, it may be desirable or a requirement to record pressures other than, or in addition to, those listed in para. 4.4.4 or 4.4.5. Where possible, such recorded pressures shall be identified in accordance with Appendix I.

4.5 TESTING WITH LIQUIDS, PRESSURE RELIEF DEVICES DISCHARGING TO ATMOSPHERIC PRESSURE

4.5.1 Test Arrangements. The pressure source may be a pump or an accumulator of liquid in combination with high-pressure compressed gas. Measures shall be taken to ensure that pressure pulsations in the system are reduced to a minimum. The flow-meter test arrangement, Fig. 3, illustrates a recommended arrangement, up to and including the test pressure relief device. Figure 6 illustrates a recommended discharge arrangement.

(a) If a flow meter [para. 4.2.4(a)(1)] is used, the associated measurements shall include, as a minimum, flow-meter differential pressure, device-inlet pressure, and liquid temperature. In this case, the use of a means of determining the volume or weight of the discharge is not a requirement.

NOTE: When conducting flow-meter tests involving a pressure relief device having high inlet pressure and low flow rates, it may be desirable to install the flow meter downstream of the pressure relief device. Such installations are acceptable provided the installation has been calibrated in accordance with para. 3.8.

(b) If a flow meter is not used, volumetric or gravimetric determination of the pressure relief device discharge over a period of time shall be made. Readings of the device-inlet pressure and liquid temperature shall be made and recorded. Means shall be provided for directing the discharge into and diverting it from the tank used for measuring purposes.

Copyright ASME International
Provided by IHS under license with ASME
No reproduction or networking permitted without license from IHS

4.5.2 Preliminary Tests. Preliminary tests may be permitted for testing and adjusting operation of the test apparatus and/or device being tested (see para. 3.5). Such tests may be necessary to ensure the absence of leaks in the test apparatus and ensure that all gas or air has been vented from the component parts of the system, except those referred to in para. 4.5.1.

4.5.3 Details of Procedure for Flow Measurement of Devices Using the Flow-Meter Method

(a) Increase the pressure at the device inlet. During the pressure interval starting at 90% of the expected set pressure, the rate of pressure increase shall not exceed 2.0 psi/sec, or whatever lesser rate of increase is necessary for the accurate reading of the pressure. Observe and record the set pressure of the device and any other desired or pertinent characteristics.

(b) For reclosing pressure relief devices, continue increasing the pressure at the device inlet until the device remains open. Observe the action of the device. Gradually decrease the inlet pressure until the device closes. Record the reseating pressure of the device. Observe the action of the device.

(c) For reclosing pressure relief devices, repeat (a) and (b), recording set and reseating pressures until both are established and stabilized. These values are established by computing the average of at least the last three measured values. Set pressure and blowdown are considered stable when the measured values show no consistent upward or downward trend and all are within ±1% or ±0.5 psi, whichever is greater, of the average value. If the parties to the test agree, an alternative criteria of stability may be used.

(d) Establish and maintain flow-rating pressure until instruments indicate a steady-state condition.

(e) Record the following:

(1) device-inlet pressure

(2) device-disk lift, as applicable

(3) liquid temperature

(4) flow-meter differential pressure

(f) Decrease inlet pressure slowly and again record reseating pressure of a reclosing pressure relief device.

4.5.4 Details of Procedure for Flow Measurement of Devices Using the Volumetric or Gravimetric Method

NOTE: The period of the test is determined by the measured time the discharge of the device is directed into the tank used for measuring purposes. Care shall be taken that the pressure at the device inlet remains stable during this period.

(a) Increase the pressure at the device inlet. During the pressure interval starting at 90% of the expected set pressure, the rate of pressure increase shall not exceed 2.0 psi/sec, or whatever lesser rate of increase is necessary for the accurate reading of the pressure. Observe and record the set pressure of the device and any other desired or pertinent characteristics.

(b) For reclosing pressure relief devices, continue increasing the pressure at the device inlet until the device remains open. Observe the action of the device. Gradually decrease the inlet pressure until the device closes. Record the reseating pressure of the device. Observe the action of the device.

(c) For reclosing pressure relief devices, repeat (a) and (b), recording set and reseating pressures until both are established and stabilized. These values are established by computing the average of at least the last three measured values. Set pressure and blowdown are considered stable when the measured values show no consistent upward or downward trend and all are within ±1% or ±0.5 psi, whichever is greater, of the average value. If the parties to the test agree, an alternative criteria of stability may be used.

(d) Establish and maintain flow-rating pressure until instruments indicate a steady-state condition.

(e) Record the following:

(1) device-inlet pressure

(2) device-disk lift, as applicable

(3) liquid temperature

(f) Direct valve discharge into measuring tank.

(g) Repeat (e) at specified intervals.

(h) Divert device discharge from measuring tank.

(i) Record length of runs and times of recording data as measured by stopwatch, electric synchronous clock with second hand, or other appropriate means.

(j) Decrease inlet pressure slowly and again record reseating pressure of a reclosing pressure relief device.

4.5.5 Observation of Mechanical Characteristics. During the flow-meter or volumetric method of test, the mechanical characteristics shall be observed by hearing, feeling, or seeing, and recorded during the flow test. If the valve chatters, flutters, or does not reseat satisfactorily, such action shall be recorded. Upon agreement of all interested parties, the valve may be readjusted or repaired and retested.

Copyright ASME International
Provided by IHS under license with ASME
No reproduction or networking permitted without license from IHS

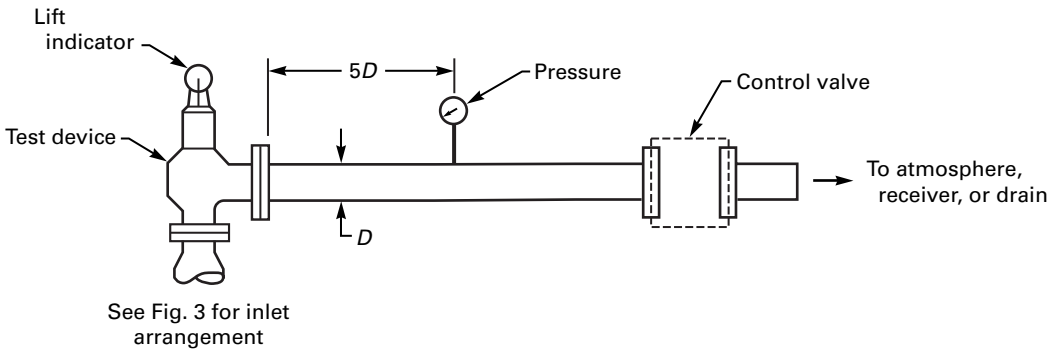

FIG. 9 RECOMMENDED DISCHARGE ARRANGEMENTS FOR TESTING DEVICES WITH BUILT-UP BACK PRESSURE

4.5.6 Recording Additional Data. During the flow-meter or volumetric method test, it may be desirable, or a requirement, to record pressures other than, or in addition to, those listed in paras. 4.5.3 and 4.5.4. Where possible, such recorded pressures shall be identified in accordance with Appendix I. With closed discharge systems, it is not possible to observe or record some characteristic pressures.

4.6 TESTING WITH STEAM, WITH BACK PRESSURE ABOVE ATMOSPHERIC

4.6.1 Test Arrangements. Recommended test arrangements are illustrated in Figs. 3, 7, and 9. Capacity determination shall be made by means of a flow meter [para. 4.2.4(a)(1)] installed at the upstream side of the valve. Figure 3 shows a recommended test arrangement, up to and including the test valve. Figures 7 and 9 show discharge arrangements.

(a) Figure 7 illustrates a recommended test arrangement for testing with superimposed back pressure. Means are provided for applying back pressure to the valve prior to the valve reaching its set pressure [see para. 4.2.5(b)]. A control valve shall be provided for controlling the back pressure prior to, during, and after the opening of the test valve. The piping shall be so arranged that condensate will not collect in the piping and a drain shall be provided on the back pressure vessel.

(b) Figure 9 illustrates a recommended test arrangement for testing with built-up back pressure. Required equipment includes a means of controlling the degree of back pressure built up on the test valve after opening and for measuring the static pressure in the test-valve discharge.

4.6.2 Preliminary Tests. Preliminary tests may be permitted for testing and adjusting operation of the test apparatus and/or valve being tested (see para. 3.5). Such tests may be necessary to ensure the absence of leaks in the test apparatus and that flowmeter reservoirs (meterpots) are filled, properly cooled, and initially vented.

4.6.3 Barometric Pressure. Record the barometric pressure (see para. 4.2.1).

4.6.4 Details of Procedure for Flow Measurement

(a) Atmospheric Back-Pressure Test. Tests may be conducted to determine the performance of the valve when discharging at atmospheric back pressure. The valve shall be equipped with an atmospheric discharge, as shown in Fig. 3. Test procedure shall be in accordance with paras. 4.3.4 (a) through (j), performing such portions of the procedure and recording such data as has been agreed upon.

NOTE: The objectives of this portion of the test may be only to determine and record the set pressure and closing pressure of the valve; and the lift of the valve at the flow-rating pressure, when the valve is discharging to atmosphere. In this case, the portions of paras. 4.3.4 (a) through (j) relating to capacity determination may be eliminated.

(b) Back-Pressure Test. Following the atmospheric back-pressure test, if performed, install the discharge arrangement required by Fig. 7 or 9 depending on type of back pressure desired.

4.6.5 Testing With Superimposed Back Pressure [para. 4.6.1(a)]

(a) Adjust the back pressure on the valve and the discharge piping to the required value. Increase the pressure at the valve inlet. During the pressure interval, starting at 90% of the expected set pressure,

Copyright ASME International
Provided by IHS under license with ASME
No reproduction or networking permitted without license from IHS

the rate of pressure increase shall not exceed 2.0 psi/sec, or whatever lesser rate of increase is necessary for the accurate reading of the set pressure. Observe and record the pressure of the valve, the back pressure, and any other desired or pertinent characteristics.

(b) Continue increasing the pressure at the valve inlet until the specified overpressure is reached. Observe the action of the valve. Gradually decrease the inlet pressure until the valve closes. Record the reseating pressure of the valve and the back pressure.

NOTE: During (a) and (b) above, care shall be exercised to maintain the back pressure at as uniform a value as possible.

(c) Repeat (a) and (b), recording set and reseating pressures and back pressure until all are established and stabilized. These values are established by computing the average of at least the last three measured values. Set pressure and blowdown are considered stable when the measured values show no consistent upward or downward trend and all are within ±1% or ±0.5 psi, whichever is greater, of the average value. If the parties to the test agree, an alternative criteria of stability may be used.

(d) Establish and maintain flow-rating pressure until flow instruments and back pressure gage indicate a steady-state condition.

(e) Close test-drum drain and establish and record or mark starting condensate level in a gage glass.

(f) Record the following:

(1) valve-inlet pressure

(2) valve-inlet-calorimeter-discharge temperature

(3) valve-disk lift

(4) flow-meter static pressure

(5) flow-meter differential pressure

(6) flow-meter-calorimeter-discharge temperature

(7) back pressure

(g) Reestablish original gage-glass level or new level at end of run, determine condensate by weight or volume measurement, and record.

(h) Decrease inlet pressure slowly and again record reseating pressure of valve and back pressure.

(i) In most instances, it is desirable, or a requirement, that the valve be tested over a given range of back pressure. In such cases, it is convenient if the value of back pressure chosen in (a) above be either the lowest or highest of this range. Back pressure may then be increased or decreased in increments, repeating (a) through (h) above at each incremental value.

4.6.6 Testing With Built-up Back Pressure [para. 4.6.1(b)]

(a) Increase the pressure at the valve inlet. During the pressure interval starting at 90% of the expected set pressure, the rate of pressure increase shall not exceed 2.0 psi/sec, or whatever lesser rate of increase is necessary for the accurate reading of the pressure. Observe and record the set pressure of the valve and any other desired or pertinent characteristics.

(b) Continue increasing the pressure at the valve inlet until the specified overpressure is reached. Adjust built-up back pressure to desired value. Observe the action of the valve. Gradually decrease the inlet pressure until the valve closes. Record the reseating pressure of the valve and back pressure. Observe the action of the valve.

Remove any flow restriction in the tailpipe assembled to test valve outlet. If this is not done, the valve may not achieve the same lift it did during the initial test.

(c) Repeat paragraphs (a) and (b), recording set and reseating pressures and back pressure until all are established and stabilized. These values are established by computing the average of at least the last three measured values. Set pressure and blowdown are considered stable when the measured values show no consistent upward or downward trend and all are within ±1% or ±0.5 psi, whichever is greater, of the average value. If the parties to the test agree, an alternative criteria of stability may be used.

(d) Establish and maintain flow-rating pressure until flow instruments and back pressure gage indicate a steady-state condition.

(e) Close test-drum drain and establish and record or mark starting condensate level in a gage glass.

(f) Record the following:

(1) valve-inlet pressure

(2) valve-inlet-calorimeter-discharge temperature

(3) valve-disk lift

(4) flow-meter static pressure

(5) flow-meter differential pressure

(6) flow-meter-calorimeter-discharge temperature

(7) back pressure

(g) Reestablish original gage-glass level or new level at end of run, determine condensate by weight or volume measurement, and record.

(h) Decrease inlet pressure slowly and again record reseating pressure of valve and back pressure.

Copyright ASME International
Provided by IHS under license with ASME
No reproduction or networking permitted without license from IHS

(i) In most instances, it is desirable, or a requirement, that the valve be tested over a given range of back pressure. In such cases, it is convenient if the value of back pressure chosen in (b) above be either the lowest or highest of this range. Back pressure may then be increased or decreased in increments, repeating (a) through (h) above at each incremental value.

4.6.7 Observation of Mechanical Characteristics. During the tests with superimposed or built-up back pressure, mechanical characteristics shall be observed by hearing, feeling, or seeing, and recorded during the flow test. If the valve chatters, flutters, or does not reseat satisfactorily, such action shall be recorded. Upon agreement of all interested parties, the valve may be readjusted or repaired and retested. When testing valves against back pressure, any range in which the valve does not reach rated lift at the flow-rating pressure shall be recorded.

4.6.8 Recording Additional Data. During tests with superimposed or built-up back pressure, it may be desirable, or a requirement, to record pressures other than, or in addition to, those listed in para. 4.6.5 or 4.6.6 Where possible, such recorded pressures shall be identified in accordance with Appendix I. With closed discharge systems, such as para. 4.6.1(a), it is not possible to observe or record some characteristic pressures.

4.7 TESTING WITH GAS OR AIR, WITH BACK PRESSURE ABOVE ATMOSPHERIC

4.7.1 Test Arrangements. Recommended test arrangements are illustrated in Figs. 3, 7, and 9. Capacity determination shall be made by means of a flow meter [para. 4.2.4(a)(1)] installed at the upstream side of the valve. Figure 3 shows a recommended test arrangement, up to and including the test valve. Figures 7 and 9 show discharge arrangements.

(a) Figure 7 illustrates a recommended test arrangement for testing with superimposed back pressure to the valve prior to the valve reaching its set pressure [see para. 4.2.5(b)]. A control valve shall be provided for controlling the back pressure prior to, during, and after the opening of the test valve. The piping shall be so arranged that condensate will not collect in the piping and a drain shall be provided on the back-pressure vessel.

(b) Figure 9 illustrates a recommended test arrangement for testing with built-up back pressure. Required equipment includes a means of controlling the degree of back pressure built up on the test valve after opening and for measuring the static pressure in the test-valve discharge.

4.7.2 Preliminary Tests. Preliminary tests may be permitted for testing and adjusting operation of the test apparatus and/or valve being tested (see para. 3.5). Such tests may be necessary to ensure the absence of leaks in the test apparatus.

4.7.3 Barometric Pressure. Record the barometric pressure (see para. 4.2.1).

4.7.4 Details of Procedure for Flow Measurement

(a) Atmospheric Back-Pressure Test. Tests may be conducted to determine the performance of the valve when discharging at atmospheric back pressure. The valve shall be equipped with an atmospheric discharge, as shown in Fig. 3. Test procedure shall be in accordance with paras. 4.4.4(a) through (f) performing such portions of the procedure and recording such data as has been agreed upon.

NOTE: The objectives of this portion of the test may be only to determine and record the set pressure and closing pressure of the valve; and the lift of the valve at the flow-rating pressure, when the valve is discharging to atmosphere. In this case, the portions of paras. 4.4.4(a) through (f) relating to capacity determination may be eliminated.

(b) Back-Pressure Test. Following the atmospheric back-pressure test, if performed, install the discharge arrangement required by Figs. 7 or 9, depending on type of back pressure desired.

4.7.5 Testing With Superimposed Back Pressure [para. 4.7.1(a)]

(a) Adjust the back pressure on the valve and the discharge piping to the required value. Increase the pressure at the valve inlet. During the pressure interval starting at 90% of the expected set pressure, the rate of pressure increase shall not exceed 2.0 psi/sec, or whatever lesser rate of increase is necessary for the accurate reading of the set pressure. Observe and record the set pressure of the valve, the back pressure, and any other desired or pertinent characteristics.

(b) Continue increasing the pressure at the valve inlet until the specified overpressure is reached. Observe the action of the valve. Gradually decrease the inlet pressure until the valve closes. Record the reseating pressure of the valve and the back pressure. Observe the action of the valve.

Copyright ASME International
Provided by IHS under license with ASME
No reproduction or networking permitted without license from IHS

NOTE: During (a) and (b) above, care shall be exercised to maintain the back pressure at as uniform a value as possible.

(c) Repeat (a) and (b), recording set and reseating pressures, and back pressure, until all are established and stabilized. These values are established by computing the average of at least the last three measured values. Set pressure and blowdown are considered stable when the measured values show no consistent upward or downward trend and all are within ±1% or ±0.5 psi, whichever is greater, of the average value. If the parties to the test agree, an alternative criteria of stability may be used.

(d) Establish and maintain flow-rating pressure until flow instruments and back pressure gage indicate a steady-state condition.

(e) Record the following:

(1) valve-inlet pressure
(2) valve-inlet temperature
(3) valve-disk lift
(4) flow-meter-inlet static pressure
(5) flow-meter-inlet temperature
(6) flow-meter differential pressure
(7) back pressure

(f) Decrease inlet pressure slowly and again record reseating pressure of valve and back pressure.

(g) In most instances, it is desirable or a requirement that the valve be tested over a given range of back pressure. In such cases, it is convenient if the value of back pressure chosen in para. 4.7.5(a) be either the lowest or highest of this range. Back pressure may then be increased or decreased in increments, repeating (a) through (f) above at each incremental value.

4.7.6 Testing With Built-Up Back Pressure [para. 4.7.1(b)]

(a) Increase the pressure at the valve inlet. During the pressure interval starting at 90% of the expected set pressure, the rate of pressure increase shall not exceed 2.0 psi/sec, or whatever lesser rate of increase is necessary for the accurate reading of the pressure. Observe and record the set pressure of the valve and any other desired or pertinent characteristics.

(b) Continue increasing the pressure at the valve inlet until the specified overpressure is reached. Adjust built-up back pressure to desired value. Observe the action of the valve. Gradually decrease the inlet pressure until the valve closes. Record the reseating pressure of the valve and back pressure. Observe the action of the valve.

Remove any flow restriction in the tailpipe assembled to test valve outlet. If this is not done, the valve may not achieve the same lift it did during the initial test.

(c) Repeat paras. (a) and (b), recording set and reseating pressures, and back pressure, until all are established and stabilized. These values are established by computing the average of at least the last three measured values. Set pressure and blowdown are considered stable when the measured values show no consistent upward or downward trend and all are within ±1% or ±0.5 psi, whichever is greater, of the average value. If the parties to the test agree, an alternative criteria of stability may be used.

(d) Establish and maintain flow-rating pressure and back pressure until flow instruments and back pressure gage indicate a steady-state condition.

(e) Record the following:

(1) valve-inlet pressure
(2) valve-inlet temperature
(3) valve-disk lift
(4) flow-meter inlet static pressure
(5) flow-meter inlet temperature
(6) flow-meter differential pressure
(7) back pressure

(f) Decrease inlet pressure slowly and again record reseating pressure and back pressure.

(g) In most instances, it is desirable, or a requirement, that the valve be tested over a given range or back pressure. In such cases, it is convenient if the value of back pressure chosen in para. 4.7.5(a) be either the lowest or highest of this range. Back pressure may then be increased or decreased in increments, repeating (a) through (f) above at each incremental value.

4.7.7 Observation of Mechanical Characteristics. During the tests with superimposed or built-up back pressure, mechanical characteristics shall be observed by hearing, feeling, or seeing, and recorded during the flow test. If the valve chatters, flutters, or does not reseat satisfactorily, such action shall be recorded. Upon agreement of all interested parties, the valve may be readjusted or repaired and retested. When testing valves against back pressure, any range in which the valve does not reach rated lift at the flow-rating pressure shall be recorded.

4.7.8 Recording Additional Data. It may be desirable or a requirement to record pressures other than, or in addition to, those listed in para. 4.3.4. Where possible, such recorded pressures shall be identified in accordance with Appendix I. With closed dis-

Copyright ASME International
Provided by IHS under license with ASME
No reproduction or networking permitted without license from IHS

charge systems, it is not possible to observe or record some characteristic pressures.

4.8 TESTING WITH LIQUIDS, WITH BACK PRESSURE ABOVE ATMOSPHERIC

4.8.1 Test Arrangements. Pressure sources can be a pump or an accumulator of liquid, in combination with high-pressure compressed gas. Precautions shall be taken to ensure that pressure pulsations are reduced to a minimum. Figure 3 shows a recommended test arrangement, up to and including the test valve. Figures 7 and 9 show discharge arrangements, for testing with superimposed and built-up back pressure, respectively. A flow meter [para. 4.2.4(b)(1)] shall be used in either case. Instrumentation shall be suitably installed to indicate or record the following:

(a) liquid temperature
(b) flow-meter differential pressure
(c) valve-inlet pressure
(d) back pressure

4.8.2 Preliminary Tests. Preliminary tests may be permitted for testing and adjusting operation of the test apparatus and/or valve being tested (see para. 3.5). Such tests may be necessary to ensure the absence of leaks in the test apparatus and to ensure that all gas or air has been vented from the component parts of the system.

4.8.3 Details of Procedure for Flow Measurement

(a) Atmospheric Back-Pressure Test. Tests may be conducted to determine the performance of the valve when discharging at atmospheric back pressure. The valve shall be equipped with an atmospheric discharge, as shown in Fig. 3. Test procedure shall be in accordance with paras. 4.5.3(a) through (f) performing such portions of the procedure and recording such data as has been agreed upon.

NOTE: The objectives of this portion of the test may be only to determine and record the set pressure and closing pressure of the valve; and the lift of the valve at the flow-rating pressure, when the valve is discharging to atmosphere. In this case, the portions of paras. 4.5.3 (a) through (f) relating to capacity determination may be eliminated.

(b) Back-Pressure Test. Following the atmospheric back-pressure test, if performed, install the discharge arrangement required by Fig. 7 or 9, depending on type of back pressure desired.

4.8.4 Testing With Superimposed Back Pressure (Fig. 7)

(a) Adjust the back pressure on the valve and discharge piping to the required value. Increase the pressure at the valve inlet. During the pressure interval starting at 90% of the expected set pressure, the rate of pressure increase shall not exceed 2.0 psi/sec, or whatever lesser rate of increase is necessary for the accurate reading of the pressure. Observe and record the set pressure of the valve, the back pressure, and any other desired or pertinent characteristics.

(b) Continue increasing the pressure at the valve inlet until the specified overpressure is reached. Observe the action of the valve. Gradually decrease the inlet pressure until the valve closes. Record the reseating pressure of the valve and the back pressure. Observe the action of the valve.

NOTE: During (a) and (b) above, care shall be exercised to maintain the back pressure at as uniform a value as possible.

(c) Repeat (a) and (b), recording set and reseating pressures, and back pressure, until all are established and stabilized. These values are established by computing the average of at least the last three measured values. Set pressure and blowdown are considered stable when the measured values show no consistent upward or downward trend and all are within ±1% or ±0.5 psi, whichever is greater, of the average value. If the parties to the test agree, an alternative criteria of stability may be used.

(d) Establish and maintain flow-rating pressure until flow instruments and back pressure gage indicate a steady-state condition.

(e) Record the following:

(1) valve-inlet pressure
(2) valve-disk lift
(3) liquid-inlet temperature
(4) flow-meter differential pressure
(5) back pressure

(f) Decrease inlet pressure slowly and again record reseating pressure of valve and back pressure.

(g) In most instances, it is desirable, or a requirement, that the valve be tested over a given range of back pressure. In such cases, it is convenient if the value of back pressure chosen in (a) above be either the lowest or highest of this range. Back pressure may then be increased or decreased in increments, repeating (a) through (f) above at each incremental value.

4.8.5 Testing With Built-Up Back Pressure (Fig. 9)

(a) Increase the pressure at the valve inlet. During the pressure interval starting at 90% of the expected

Copyright ASME International
Provided by IHS under license with ASME
No reproduction or networking permitted without license from IHS

set pressure, the rate of pressure increase shall not exceed 2.0 psi/sec, or whatever lesser rate of increase is necessary for the accurate reading of the pressure. Observe and record the set pressure of the valve and any other desired or pertinent characteristics.

(b) Continue increasing the pressure at the valve inlet until the specified overpressure is reached. Adjust built-up back pressure to desired value. Observe the action of the valve. Gradually decrease the inlet pressure until the valve closes. Record the reseating pressure of the valve and back pressure. Observe the action of the valve.

Remove any flow restriction in the tailpipe assembled to test valve outlet. If this is not done, the valve may not achieve the same lift it did during the initial test.

(c) Repeat paras. (a) and (b), recording set and reseating pressures, and back pressure, until all are established and stabilized. These values are established by computing the average of at least the last three measured values. Set pressure and blowdown are considered stable when the measured values show no consistent upward or downward trend and all are within ±1% or ±0.5 psi, whichever is greater, of the average value. If the parties to the test agree, an alternative criteria of stability may be used.

(d) Establish and maintain flow-rating pressure and back pressure until flow instruments and back-pressure gage indicate a steady-state condition.

(e) Record the following:

(1) valve-inlet pressure
(2) valve-disk lift
(3) liquid-inlet temperature
(4) flow-meter differential pressure
(5) back pressure

(f) Decrease inlet pressure slowly and again record reseating pressure of valve and back pressure.

(g) In most instances, it is desirable, or a requirement, that the valve be tested over a given range of back pressure. In such cases, it is convenient if the value of back pressure chosen in para. 4.8.4(a) be either the lowest or highest of this range. Back pressure may then be increased or decreased in increments, repeating (a) through (g) above at each incremental value.

4.8.6 Tests With Built-Up Back Pressure With Measuring Tank. The use of volumetric or gravimetric determination of valve discharge when testing with built-up back pressure is permissible. In such cases, the interested parties shall agree on a test procedure prior to conducting the tests.

4.8.7 Observation of Mechanical Characteristics. During the tests with superimposed or built-up back pressure, mechanical characteristics shall be observed by hearing, feeling, or seeing, and recorded during the flow test. If the valve chatters, flutters, or does not reseat satisfactorily, such action shall be recorded. Upon agreement of all interested parties, the valve may be readjusted and repaired and retested. When testing valves against back pressure, any range in which the valve does not reach rated lift at the flow-rating pressure shall be recorded.

4.8.8 Recording Additional Data. During the tests with superimposed or built-up back pressure, it may be desirable, or a requirement, to record pressures other than, or in addition to, those listed in para. 4.8.4 or 4.8.5. Where possible, such recorded pressure shall be identified in accordance with Appendix I. With closed discharge systems, it is not possible to observe or record some characteristic pressures.

4.9 TESTING WITH GAS OR AIR, NONRECLOSING PRESSURE RELIEF DEVICE FLOW RESISTANCE METHOD

4.9.1 Test Arrangement. A recommended test arrangement is shown in the flow resistance test rig arrangement, Fig. 2, which represents the test vessel and test device of Fig. 3. The device shall have the same nominal pipe size dimension as the test rig. Differential pressure measurement instruments or transducers shall be used between pressure taps A-B, B-C, C-D. The primary element shall be either a subsonic-inferential meter or sonic-inferential meter as shown in Fig. 3 and described in para. 4.2.4(a).

Instrumentation for each type of meter is listed in the following subparagraphs.

(a) Subsonic-Inferential Meters. Measurements associated with subsonic-inferential meters are

(1) inlet static pressure,
(2) inlet temperature, and
(3) differential pressure.

(b) Sonic-Inferential Meters. Measurements associated with sonic-inferential meters are

(1) inlet total (stagnation) pressure, and
(2) inlet total (stagnation) temperature.

4.9.2 Preliminary Tests. Preliminary tests may be permitted for testing the test apparatus. Such tests may be necessary to ensure the absence of leaks

Copyright ASME International
Provided by IHS under license with ASME
No reproduction or networking permitted without license from IHS

in the test apparatus and that all differential pressure measurement devices are functioning properly and within their pressure measurement range.

4.9.3 Barometric Pressure. Record the barometric pressure (see para. 4.2.1).

4.9.4 Details of Procedure for Flow Resistance Measurement Using Subsonic-Inferential-Meter Method

(a) Install the device into the flow resistance test rig.

(b) Increase the pressure at pressure tap B. During the interval starting at 90% of the expected set pressure, the rate of pressure increase shall not exceed 2.0 psi/sec, or whatever lesser rate of increase is necessary for the accurate reading of the pressure. Observe and record the set pressure of the device and any other desired or pertinent characteristics.

(c) Establish and maintain flow-rating pressure until flow instruments indicate a steady-state condition.

(d) Simultaneously record the following measurements (it is preferable to use a data acquisition system for these measurements):

(1) test rig inlet pressure
(2) test rig inlet temperature
(3) flow meter inlet static pressure
(4) flow meter inlet total temperature
(5) flow meter differential pressure
(6) tap B pressure
(7) differential pressure tap A-B
(8) differential pressure tap B-C
(9) differential pressure tap C-D

4.9.5 Details of Procedure for Flow Resistance Measurement Using Sonic-Inferential-Meter Method

(a) Install the device into the flow resistance test rig.

(b) Increase the pressure at pressure tap B. During the interval starting at 90% of the expected set pressure, the rate of pressure increase shall not exceed 2.0 psi/sec, or whatever lesser rate of increase is necessary for the accurate reading of the pressure. Observe and record the set pressure of the device and any other desired or pertinent characteristics.

(c) Establish and maintain flow-rating pressure until flow instruments indicate a steady-state condition.

(d) Simultaneously record the following measurements (it is preferable to use a data acquisition system for these measurements):

(1) test rig inlet pressure
(2) test rig inlet temperature
(3) flow meter inlet total pressure
(4) flow meter inlet total temperature
(5) tap B pressure
(6) differential pressure tap A-B
(7) differential pressure tap B-C
(8) differential pressure tap C-D

4.9.6 Recording Additional Data. During the subsonic or sonic-inferential-meter method of test, it may be desirable, or a requirement, to record pressures other than, or in addition to, those listed in para. 4.9.4 or 4.9.5. Where possible, such recorded pressures shall be identified in accordance with Appendix I.

4.9.7 Resistance Testing on Nonreclosing Pressure Relief Devices with Connections Not Compatible with Fig. 2. The use of adapters for devices with inlet/outlet connections that are not compatible with the test rigs of Fig. 2 are allowed provided the device is the same nominal size as the test rig and the adapter's resistance to flow, if the adapter constitutes part of a flow path, is properly accounted for as follows.

(a) Install the adapter into the test rig of Fig. 2 and conduct three baseline flow tests to determine the average flow resistance of the adapter.

(b) Proceed with determining the flow resistance of the combined assembly, the test device, and adapter, per para. 4.9.4 or 4.9.5.

(c) Calculate the test device individual flow resistance, K_{Ri}, by subtracting the average flow resistance of the adapter. The use of, and specification of, the adapter shall be included in the test report.

4.10 TESTING NONRECLOSING PRESSURE RELIEF DEVICES TO DETERMINE A SET PRESSURE FOR INCOMPRESSIBLE FLUIDS

4.10.1 Test Arrangement. A recommended test arrangement for conducting set pressure tests on incompressible fluids is shown in Fig. 10. The test arrangement shall have the same or larger nominal pipe size dimensions as the device. Unless no portion of the device extends into the outlet connection arrangement, the outlet connection shall match the internal bore of the flow resistance test arrangement of para 4.9. The test medium shall be water or other suitable incompressible fluid. The test shall be conducted in such a way as to prevent com-

Copyright ASME International
Provided by IHS under license with ASME
No reproduction or networking permitted without license from IHS

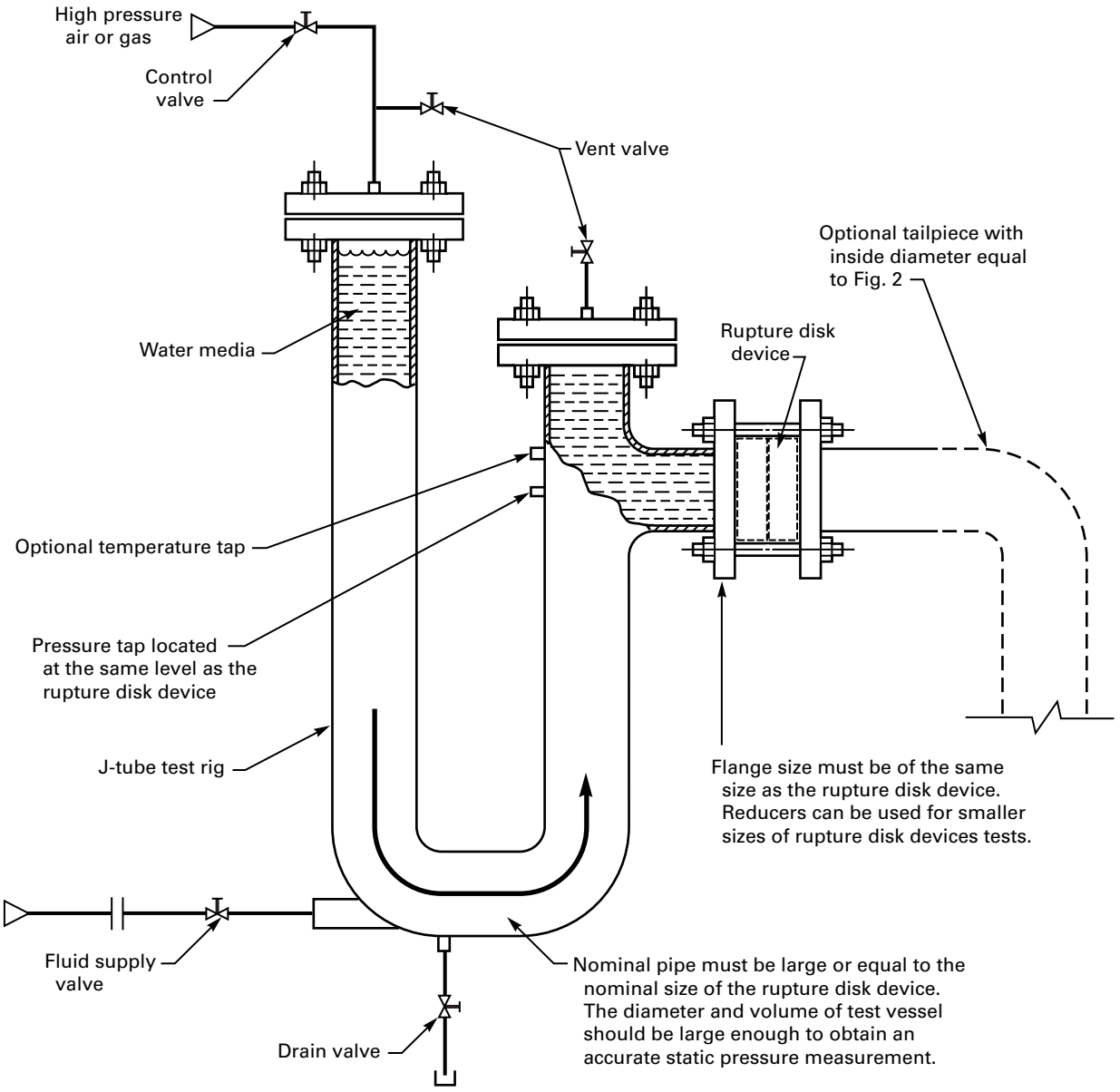

FIG. 10 RECOMMENDED ARRANGEMENTS FOR CONDUCTING OPENING TEST ON NONRECLOSING PRESSURE RELIEF DEVICES WITH INCOMPRESSIBLE FLUIDS

Copyright ASME International
Provided by IHS under license with ASME
No reproduction or networking permitted without license from IHS

pressed gas from passing through the device at any time. After set pressure tests have been conducted, the device shall be removed from this test arrangement and installed within the resistance factor test arrangement shown in Fig. 2. The device flow resistance factor shall be tested per para. 4.9 using gas or air as the fluid.

4.10.2 Preliminary Test. Preliminary tests may be permitted for testing and adjusting operation of the test apparatus and/or device being tested (see para. 3.5). Such tests may be necessary to ensure the absence of leaks in the test apparatus.

4.10.3 Details of Procedure for Determining a Nonreclosing Pressure Relief Device Flow Resistance Factor Applicable for Incompressible Fluids

(a) Install the device between the flanges of the test apparatus.

(b) Position valves to fill the test apparatus with liquid and vent any trapped gas immediately upstream to the device.

(c) Reposition valves to pressurize the system. Increase the pressure at the pressure tap. During the interval starting at 90% of the expected set pressure the rate of pressure increase shall not exceed 2.0 psi/sec, or whatever lesser rate of increase is necessary for the accurate reading of the pressure. Observe and record the set pressure of the device and any other desired or pertinent characteristics.

(d) Remove the device from the test apparatus. Care shall be taken not to disturb the opening pattern of the device.

(e) Complete the device flow resistance testing per para. 4.9.4 using gas or air as the test medium.

Copyright ASME International
Provided by IHS under license with ASME
No reproduction or networking permitted without license from IHS

SECTION 5 COMPUTATION OF RESULTS

5.1 CORRECTION OF MEASURED VARIABLES

The values of measured variables shall be corrected in accordance with instrument calibrations. No other corrections to the data are permitted.

5.2 REVIEW OF INSTRUMENT READINGS

Before calculations are undertaken, the instrument readings, as recorded in the log, shall be reviewed for inconsistency and large fluctuation in accordance with ASME PTC 19.1

5.3 USE OF EQUATION SYMBOLS

The symbols used in this Code are ones which are already in common use in the particular fields of engineering involved. In a few cases, the same letter has different meanings in different parts of the Code according to its application. In order to avoid confusion, each equation has been provided with its own list of definitions of symbols. Users are cautioned not to assume that a symbol has the same meaning in another equation.

5.4 DENSITY

Computation of density shall be made from measured values of pressure, temperature, and specific gravity.

(a) For steam and other condensible fluids, the density ρ shall be taken as $1/v$ where v, the specific volume, ft^3/lbm, is obtained from the ASME Steam Tables, latest edition, for steam, or other established tables for other fluids at the measured pressure and temperature.

(b) The following relations shall be used for computing the density of gases where the physical properties are accurately known:

For any dry gas

$$\rho = \frac{144P}{ZRT}$$

For dry air, this reduces to

$$\rho = \frac{2.699P}{ZT}$$

For air and other gases

$$\rho = \frac{2.699GP}{ZT}$$

where

G = specific gravity with respect to dry air, M/M_a
M = molecular weight of gas
M_a = molecular weight of air
P = static pressure, psia
R = gas constant, 1545.4/M, ft-lbf/lbm-°R
T = temperature, °R
Z = compressibility factor as defined in the equation of state, $PV=ZRT$. If more details are desired, see ASME PTC 19.5.

5.5 CAPACITY CALCULATIONS

The following is presented to assist in the use of the calculation sheets and to aid in carrying out the several methods of computing capacity. Flow equations, correction factors, and procedures for calculations are in accordance with PTC 19.5

5.5.1 Volumetric or Weighed-Water Method. This technique requires the collection of the discharge from the valve under test either as a mass or a volume over a known period of time. Care must be taken to ensure that the valve-inlet conditions are maintained throughout the test and that neither extraneous water is measured nor that any valve discharge is lost.

Form 5.5.1 should be used for recording the data and computing the results. The first eight items on this form are primarily for identification purposes. Items 9 through 12 record the amount of water collected over the given time interval. Item 11 is any leakage after the valve throat which might be at the valve stem, drain hole in the valve, or in the discharge piping. The manner in which this leakage is to be evaluated shall be agreed upon by the parties to the test and the amount shall be added

Copyright ASME International
Provided by IHS under license with ASME
No reproduction or networking permitted without license from IHS

to the total accumulated (see Items 20 and/or 27). Item 12 is to account for any leakage of the condenser circulating water into the condensate. This is determined by a condenser leakage test and the amount is to be subtracted from the total accumulated (see Item 20).

Items 13 through 20 record more data and show the calculation of the steam flow through the valve per hour, corrected to dry-and-saturated conditions at the valve inlet. In the equation for Item 20, the weight of water accumulated is divided by the time interval and multiplied by 60 to obtain the accumulated flow rate in pounds per hour. This is multiplied by the ratio of the square root of the specific volume of the flowing steam at the valve inlet to the specific volume of dry-and-saturated steam at the inlet pressure. To this quantity is added the valve-stem leakage. The condenser leakage is subtracted for the test using water.

Items 21 through 25 record additional data. Item 27 determines the measured relieving capacity for a water test with no correction being made for either specific volume or condenser leakage (it being assumed that a condenser was required). Item 28 provides a capacity correction to whatever reference condition has been specified for the test. Item 29 changes the unit to gallons per minute at the reference condition.

5.5.2 Steam — Flow-Meter Method. This technique meters the steam flow upstream of the valve under test. Care must be taken that all the metered steam passes through the valve or is accounted for in the calculations. In addition to leakage, metered steam that does not reach the valve can occur by condensation of the steam in connecting piping and particularly in the test vessel.

The flow equations, correction factors, and procedures for calculations incorporated in Form 5.5.2 are in accordance with ASME PTC 19.5.

Form 5.5.2 should be used for recording the data and computing the results. The first eight items on this form are primarily for identification purposes. Form 5.5.2 proceeds through the trial-flow calculation in order to evaluate the proper factors and goes on to Item 27, which provides the flow rate of steam at the reference condition in pounds per hour.

Items 28 through 37 transfer and adjust the meter flow to the flow through the valve. Item 34 and its use in calculating the valve relieving capacity assumes the meter calorimeter's sampling tube is downstream of the meter. If this is not the case, the subtraction should not be made since the correction shown is to account for metered steam not reaching the valve. All values used are corrected to the reference condition.

5.5.3 Liquids — Flow-Meter Method. This technique meters the liquid flow upstream of the valve under test. Care must be taken that all the metered liquid passes through the valve or is accounted for in the calculations.

The flow equations, correction factors, and procedures for calculations incorporated in Form 5.5.3 are in accordance with ASME PTC 19.5.

Form 5.5.3 should be used for recording data and computing the results. The first eight items on this form are primarily for identification purposes. The form proceeds through the trial flow calculation in order to evaluate the proper factors and goes on to Item 25, the measured relieving capacity through the meter at the meter conditions.

Items 26 through 32 provide the data and equation to calculate the relieving capacity at a reference condition, if it is specified by the test. The evaluation assumes no change in fluid temperature between the meter and the valve inlet.

5.5.4 Air or Gas — Flow-Meter Method. This technique meters the gas flow upstream of the valve under test. Care must be taken that all the metered gas passes through the valve or is accounted for in the calculations.

The flow equations, correction factors, and procedures for calculations incorporated in Form 5.5.4 are in accordance with ASME PTC 19.5.

Form 5.5.4 should be used for recording the data and computing the results. The first twelve items on this form are primarily for identification purposes. Form 5.5.4 proceeds through the trial flow calculation to be able to evaluate the proper factors for refinement, through the measured capacity in pounds per hour (Item 25), and on to the flow rate through the meter in cubic feet per minute at some prespecified base condition.

Items 35 through 40 then provide for the calculation of the flow through the valve in cubic feet per minute at a reference inlet condition.

5.5.5 Air or Gas — Sonic-Flow Method. This technique meters the gas flow upstream of the valve under test. Care must be taken that all the metered gas passes through the valve or is accounted for in the calculations.

Copyright ASME International
Provided by IHS under license with ASME
No reproduction or networking permitted without license from IHS

The flow equations, flow functions, correction factors, and procedures for calculation incorporated in Form 5.5.5 are in accordance with PTC 19.5.

The use of Form 5.5.5 is recommended for either air or gas and, with the addition of basic data and valve identification, the form follows the procedure of ASME PTC 19.5.

This calculation follows through to evaluate the flow through the meter (Item 23) in pounds per hour.

Items 24 through 30 are then used to determine the flow through the valve in cubic feet per minute at a reference condition.

5.5.6 Fuel-Gas Flow — Flow-Meter Method. This technique meters the gas flow upstream of the valve under test. Care must be taken that all of the metered gas passes through the valve or is accounted for in the calculations.

The flow equations, correction factors, and procedures for calculation incorporated in Form 5.5.6 are in accordance with ASME PTC 19.5.

Form 5.5.6 should be used for recording the data and computing the results. The first twelve items on this form are primarily for identification purposes.

Form 5.5.6 proceeds through the trial-flow calculation to be able to evaluate the proper factors for refinement, through the measured capacity in cubic feet per hour at some prespecified base condition converted from the required pounds per hour (Item 32).

Items 35 through 40 provide for the calculation of the flow through the valve in cubic feet per minute at a reference inlet condition.

5.5.7 Air or Gas Nonreclosing Pressure Relief Device Flow Resistance Method. This technique measures the resistance due to the presence of a nonreclosing pressure relief device in a piping system. It is used in conjunction with either the flow-meter or sonic-flow meter methods described in paras. 5.5.4 or 5.5.5, respectively.

Form 5.5.7 should be used for recording the data and computing the results. The first seventeen (17) items on this form are for identification purposes and listing of the measured variables. Item 6, Measured Relieving Capacity, is obtained from either Form 5.5.4 or 5.5.5. Care must be taken that all of the metered gas passes through the test arrangement (see Fig. 9) or is accounted for in the calculations.

The remaining items on Form 5.5.7 are used to determine the resistance factor between each of the established pressure taps. An individual flow resistance associated with the nonreclosing pressure relief device is then calculated from these results. Two test checks must be done to verify the test results.

First, verify that the value $K_{C\text{-}D}$ is within 3% of the value $K_{A\text{-}B}$. If not, verify that the test arrangement is properly set up. Next, run a calibration test with no nonreclosing pressure relief device installed to verify that the value $K_{C\text{-}D}$ is within 3% of the value $K_{A\text{-}B}$. If so, calculate the resistance factor $K_{B\text{-}D} = K_D - K_B$ and the pipe length $L_{B\text{-}D} = L_D - L_B$. Complete the nonreclosing pressure relief device individual flow resistance calculation, replacing $K_{B\text{-}C}$, $K_{\text{pipe B-C}}$, and $L_{B\text{-}C}$ with $K_{B\text{-}D}$, $K_{\text{pipe B-D}}$, and $L_{B\text{-}D}$, respectively, in eqs. 34 and 35. This is done since the air turbulence caused by the nonreclosing pressure relief device is affecting the true pressure reading of tap C.

Second, verify that the calculated pipe roughness from eq. 33 is within the range 0.0018 to 0.00006. This is the range for schedule 40 clean commercial pipe.

Copyright ASME International
Provided by IHS under license with ASME
No reproduction or networking permitted without license from IHS

TEST REPORT FORM 5.5.1 PRESSURE RELIEF DEVICE TESTED WITH STEAM AND WATER
Observed Data and Computed Results — Weighed-Water Method

(1) Test number
(2) Test date
(3) Manufacturer's name

Measured Device Dimensions

Valve	Nonreclosing Devices
(4) Bore diameter, in. (d_b)	(4) Minimum holder bore diameter, in. (d_b)
(5) Seat diameter, in. (d_s)	(5) Minimum net flow area in.^{2}(a)
(6) Seat angle, deg	
(7) Valve-disk lift, in. (l)	
(8) Actual discharge area, in.^{2}(a_d)	

Observed Data

(9) Length of test, min (t)
(10) Mass of water or condensate, lbm (w)
(11) Valve-steam leakage, lbm/hr (w_{v1})
(12) Condenser leakage, lbm/hr (w_{c1})

STEAM
Observed Data and Computed Results at the Device Inlet

(13) Set pressure, psig (P_{set})
(14) Flow rating pressure, psia (P_f)
(15) Back pressure, psig (P_o)
(16) Fluid temperature at the calorimeter, °F (T_{cal})
(17) Percent quality or deg superheat
(18) Specific volume at reference condition, ft^3/lbm, V_{ref}
(19) Specific volume at inlet conditions, ft^3/lbm, V_{act}
(20) Measured relieving capacity adjusted to the reference condition, lbm/hr

$$W_h = \frac{60 \times w}{t}\sqrt{\frac{V_{act}}{V_{ref}}} + w_{vl} - w_{cl}$$

WATER
Observed Data and Computed Results at the Device Inlet

(21) Set pressure, psig (P_{set})
(22) Flow rating pressure, psia (P_f)
(23) Back pressure, psig (P_o)
(24) Fluid temperature, °F (T)
(25) Density of water at inlet conditions, lbm/ft^3 (ρ_{act})
(26) Density of water at reference condition, lbm/ft^3 (ρ_{ref})
(27) Measured relieving capacity, lbm/hr

$$W_h = \frac{60 \times w}{t} + w_{vl}$$

(28) Relieving capacity adjusted to water at reference condition, lbm/hr

$$W_r = W_h \times \sqrt{\frac{\rho_{ref}}{\rho_{act}}}$$

(29) Relieving capacity in gpm of water at reference condition, (US. gallons) Q (gpm)

$$Q = 0.1247\,\frac{W_r}{\rho_{ref}}$$

Copyright ASME International
Provided by IHS under license with ASME
No reproduction or networking permitted without license from IHS

TEST REPORT FORM 5.5.2 PRESSURE RELIEF DEVICE TESTED WITH STEAM
Observed Data and Computed Results — Flow-Meter Method

(1) Test number
(2) Test date
(3) Manufacturer's name

Measured Device Dimensions

Valve	Nonreclosing Devices
(4) Bore diameter, in. (d_b)	(4) Minimum holder bore diameter, in. (d_b)
(5) Seat diameter, in. (d_s)	(5) Minimum net flow area in.^{2}(a)
(6) Seat angle, deg	
(7) Valve-disk lift, in. (l)	
(8) Actual discharge area, in.^{2}(a_d)	

Flow-Meter Calculations

(9) Internal diameter of meter run pipe, in. (D)
(10) Meter-bore diameter, in. (d)
(11) Meter-bore diameter squared, in.^{2} (d^2)
(12) Beta ratio ($\beta = d/D$)
(13) Trial flow coefficient, K_o
(14) Differential pressure at the meter, inches of water (h_w)
(15) Barometric pressure, psia (P_b)
(16) Static pressure at the meter calorimeter, psia (P_m)
(17) Fluid temperature at the meter calorimeter, °F ($T_{\text{cal, meter}}$)
(18) Percent quality or deg superheat
(19) Area factor for thermal expansion, F_a
(20) Expansion factor, Y
(21) Specific volume at flowing conditions at the meter, ft^3/lbm ($V_{\text{act, meter}}$)
(22) Specific volume at reference conditions at the meter, ft^3/lbm ($V_{\text{ref, meter}}$)
(23) Trial flow rate, lbm/hr.

$$W_t = 358.93 \times d^2 \times K_o \times F_a \times Y \times \sqrt{\frac{h_w}{V_{\text{act, meter}}}}$$

(24) Viscosity, lbm/ft-sec (μ)
(25) Reynolds number,

$$R_D = \frac{0.00424 \times W_h}{(D)(\mu)}$$

(26) Orifice plate discharge coefficient, C
(27) Flow coefficient, K, $K = \dfrac{C}{\sqrt{1 - \beta^4}}$
(28) Flow rate, (lbm/hr)

$$W_h = \frac{W_t \times K}{K_o} \sqrt{\frac{V_{\text{act, meter}}}{V_{\text{ref, meter}}}}$$

Observed Data and Computed Results at the Device Inlet

(29) Set pressure, psig (P_{set}) (Burst pressure for nonreclosing device)
(30) Flow rating pressure, psia (P_f)
(31) Fluid temperature at the test drum calorimeter, °F ($T_{\text{cal, Drum}}$)
(32) Percent quality or deg superheat
(33) Specific volume at reference condition, ft^3/lbm ($V_{\text{ref, Drum}}$)
(34) Specific volume at inlet conditions, ft^3/lbm ($V_{\text{act, Drum}}$)
(35) Meter calorimeter flow, lbm/hr, W_{mc}

(continued)

Copyright ASME International
Provided by IHS under license with ASME
No reproduction or networking permitted without license from IHS

TEST REPORT FORM 5.5.2 PRESSURE RELIEF DEVICE TESTED WITH STEAM (CONT'D)
Observed Data and Computed Results — Flow-Meter Method

(36) Meter calorimeter flow adjusted to the reference condition, lbm/hr

$$W_{\text{cal, meter}} = W_{mc}\sqrt{\frac{V_{\text{act, meter}}}{V_{\text{ref, meter}}}}$$

(37) Test-drum calorimeter flow, lbm/hr, W_{dc}
(38) Test-drum calorimeter flow adjusted to the reference condition, lbm/hr

$$W_{\text{cal, drum}} = W_{dc}\sqrt{\frac{V_{\text{act, drum}}}{V_{\text{ref, drum}}}}$$

(39) Test-drum drainage, lbm/hr (W_{dr})
(40) Measured relieving capacity adjusted to the reference condition, lbm/hr,

$$W_c = W_h\sqrt{\frac{V_{\text{act, drum}}}{V_{\text{ref, drum}}}} - W_{\text{cal, meter}} - W_{\text{cal, drum}} - w_{dr}$$

Copyright ASME International
Provided by IHS under license with ASME
No reproduction or networking permitted without license from IHS

TEST REPORT FORM 5.5.3 PRESSURE RELIEF DEVICE TESTED WITH LIQUIDS
Observed Data and Computed Results — Flow-Meter Method

(1) Test number
(2) Test date
(3) Manufacturer's name

Measured Device Dimensions

Valve	Nonreclosing Devices
(4) Bore diameter, in. (d_b)	(4) Minimum holder bore diameter, in. (d_b)
(5) Seat diameter, in. (d_s)	(5) Minimum net flow area in.^{2}(a)
(6) Seat angle, deg	
(7) Valve-disk lift, in. (l)	
(8) Actual discharge area, in.^{2}(a_d)	

Flow-Meter Calculations

(9) Internal diameter of meter run pipe, in. (D)
(10) Meter-bore diameter, in. (d)
(11) Meter-bore diameter squared, in.^{2} (d^2)
(12) Beta ratio (Item 10/Item 9) ($\beta = d/D$)
(13) Temperature upstream of the meter, °F, (T_m)
(14) Differential pressure at the meter, inches of water (h_w)
(15) Barometric pressure, psia (P_b)
(16) Static pressure at the meter, psia (P_m)
(17) Fluid temperature at the meter, °F (T_m)
(18) Area factor for thermal expansion, F_a
(19) Trial flow coefficient, K_o
(20) Fluid density at meter inlet, lbm/ft^3 (ρ_m)
(21) Trial flow rate, (W_t), lbm/hr.

$$W_t = 358.93 \times d^2 \times F_a \times K_o \sqrt{h_w \times \rho_m}$$

(22) Viscosity, lbm/ft-sec (μ)
(23) Reynolds number,

$$R_D = \frac{0.00424 \times W_h}{(D)(\mu)}$$

(24) Orifice plate discharge coefficient, C
(25) Flow coefficient, K, $K = \dfrac{C}{\sqrt{1 - \beta^4}}$
(26) Measured relieving capacity, lbm/hr, $W_h = W_t \times K/K_o$

Observed Data and Computed Results at the Device Inlet

(27) Set pressure, psig (P_{set}) (Burst pressure for nonreclosing device)
(28) Flow rating pressure, psig (P_f)
(29) Back pressure, psig (P_o)
(30) Fluid temperature, °F (T_v)
(31) Density of liquid at inlet conditions, lbm/ft^3 (ρ_{act})
(32) Density of liquid at reference condition, lbm/ft^3 (ρ_{ref})
(33) Relieving capacity adjusted to liquid at reference condition, lbm. hr

$$W_r = W_h \sqrt{\rho_{ref}/\rho_{act}}$$

Copyright ASME International
Provided by IHS under license with ASME
No reproduction or networking permitted without license from IHS

TEST REPORT FORM 5.5.4 PRESSURE RELIEF DEVICE TESTED WITH AIR OR GAS
Observed Data and Computed Results — Flow-Meter Method

(1) Test number
(2) Test date
(3) Manufacturer's name
(4) Test fluid
(5) Specific gravity (ideal), (S_g)
(6) Ratio of specific heats (k)
(7) Molecular weight, (M_w)

Measured Device Dimensions

Valves	Nonreclosing Devices
(8) Bore diameter, in.	(8) Minimum holder bore diameter, in. (d_b)
(9) Seat diameter, in.	(9) Minimum net flow area, in.^{2}(a)
(10) Seat angle, deg	
(11) Valve-disk lift, in. (l)	
(12) Actual discharge area, in.^{2}(a_d)	

Flow-Meter Calculations

(13) Internal diameter of meter run pipe, in. (D)
(14) Meter-bore diameter, in. (d)
(15) Meter-bore diameter squared, in.^{2} (d^2)
(16) Beta ratio ($\beta = d/D$)
(17) Trial flow coefficient, K_o
(18) Differential pressure at the meter, inches of water (h_w)
(19) Barometric pressure, psia (P_b)
(20) Static pressure at the meter, psia (P_m)
(21) Fluid temperature at the meter, °F (T_m)
(22) Expansion factor, Y
(23) Area factor for thermal expansion, F_a
(24) Fluid density at meter inlet, lbm/ft^3 (ρ_m)
(25) Trial flow rate, (W_t), lbm/hr

$$W_t = 358.93 \times d^2 \times K_o \times Y \times F_a \sqrt{h_w \times \rho_m}$$

(26) Viscosity, lbm/ft-sec (μ)
(27) Reynolds number,

$$R_D = \frac{(0.00424)\ (W_t)}{(D)(\mu)}$$

(28) Orifice plate discharge coefficient, C
(29) Flow coefficient, K, $K = \dfrac{C}{\sqrt{1 - \beta^4}}$
(30) Measured relieving capacity, lbm/hr

$$W_h = \frac{(W_t)\ (k)}{k_o}$$

(31) Base pressure, psia (P_B)
(32) Base temperature, °F (T_B)
(33) Density of dry air at 14.696 psia and at the base temperature, lbm/ft^3 (ρ_s)
(34) Density at base condition, lbm/ft^3, $\rho_b = S_g \times P_B\rho_s/14.696$
(35) Volumetric rate at base condition at the meter, cfm

$$q_b = \frac{w_t}{(60)\ (P_B)}$$

(continued)

Copyright ASME International
Provided by IHS under license with ASME
No reproduction or networking permitted without license from IHS

TEST REPORT FORM 5.5.4 PRESSURE RELIEF DEVICE TESTED WITH AIR OR GAS (CONT'D)
Observed Data and Computed Results — Flow-Meter Method

Observed Data and Computed Results at the Device Inlet

(36) Set pressure, psig (P_{set}) (Burst pressure for nonreclosing device)
(37) Flow rating pressure, psig (P_f)
(38) Temperature at the valve inlet, absolute, °R (T_v)
(39) Reference temperature at the valve inlet, absolute, °R (T_r)
(40) Valve inlet temperature correction,

$$C = \sqrt{T_v/T_R}$$

(41) Valve capacity at reference inlet temperature, cfm, $qr = q_b \times C$

Copyright ASME International
Provided by IHS under license with ASME
No reproduction or networking permitted without license from IHS

TEST REPORT FORM 5.5.5 PRESSURE RELIEF DEVICE TESTED WITH AIR OR GAS
Observed Data and Computed Results — Sonic-Flow Method

(1) Test number
(2) Test date
(3) Manufacturer's name
(4) Test fluid
(5) Specific gravity (ideal), (S_g)
(6) Ratio of specific heats (k)
(7) Molecular weight, (M_w)

Measured Device Dimensions

Valves	Nonreclosing Devices
(8) Bore diameter, in.	(8) Minimum holder bore diameter, in. (d_b)
(9) Seat diameter, in.	(9) Minimum net flow area, in.^{2}(a)
(10) Seat angle, deg	
(11) Valve-disk lift, (l)	
(12) Actual discharge area, in.^{2}(a_d)	

Flow-Meter Calculations

(13) Internal diameter of meter run pipe, in. (D)
(14) Meter-bore diameter, in. (d)
(15) Beta ratio ($\beta = d/D$)
(16) Meter discharge coefficient at sonic-flow conditions, C
(17) Meter-bore area, in.^{2} (a_m)
(18) Ideal gas sonic-flow functions, ϕ^*_i
(19) Ratio of real gas to ideal gas sonic-flow functions, ϕ^*/ϕ^*_i
(20) Barometric pressure, psia (P_b)
(21) Meter inlet stagnation pressure, psia (P_s)
(22) Meter inlet stagnation temperature, absolute, °R (T_s)
(23) Measured relieving capacity, lbm/hr

$$W_h = 3600 \times C \times a_m \times \phi^*_i \times \phi^*/\phi^*_i \times \frac{P_s}{\sqrt{T_s}}$$

Observed Data and Computed Results at the Device Inlet

(24) Set pressure, psig (P_{set}) (Burst pressure for nonreclosing device)
(25) Flow rating pressure, psig (P_f)
(26) Temperature at the valve inlet, absolute, °R (T_v)
(27) Reference temperature at the valve inlet, absolute, °R (T_r)
(28) Density of dry air at 14.696 psia and reference temperature, lbm/ft^3, (ρ_{std})
(29) Density of fluid at reference condition, lbm/ft^3,

$$\rho_{ref} = S_g \times P_f \times \frac{\rho_{std}}{14.696}$$

(30) Valve capacity at reference condition, cfm,

$$qr = \frac{W_h}{60 \times \rho_{ref}} \sqrt{T_v/T_r}$$

Copyright ASME International
Provided by IHS under license with ASME
No reproduction or networking permitted without license from IHS

TEST REPORT 5.5.6 PRESSURE RELIEF DEVICE TESTED WITH FUEL GAS
Observed Data and Computed Results — Flow-Meter Method

(1) Test number
(2) Test date
(3) Manufacturer's name
(4) Test fluid
(5) Specific gravity (ideal), (S_g)
(6) Ratio of specific heats (k)
(7) Molecular weight, (M_w)

Measured Device Dimensions

Valve	Nonreclosing Devices
(8) Bore diameter, in.	(8) Minimum holder bore diameter (d_b)
(9) Seat diameter, in.	(9) Minimum net flow area, in.^{2}(a)
(10) Seat angle, deg	
(11) Valve-disk lift, (l)	
(12) Actual discharge area, in.^{2}(a_d)	

Flow-Meter Calculations

(13) Internal diameter of meter run pipe, in. (D)
(14) Meter-bore diameter, in. (d)
(15) Meter-bore diameter squared, in.^{2} (d^2)
(16) Beta ratio ($\beta = d/D$)
(17) Trial flow coefficient, K_o
(18) Differential pressure at the meter, inches of water (h_w)
(19) Barometric pressure, psia (P)
(20) Static pressure at the meter, psia, P_m
(21) Fluid temperature at the meter, absolute, (T_m)
(22) Expansion factor, Y
(23) Area factor for thermal expansion, F_a
(24) Compressibility at meter, Z
(25) Density, lbm/ft^3 (ρ_m)

$$\rho_m = \frac{(2.69991)\ (S_g)\ (P_m)}{(T_m)\ (Z)}$$

(26) Trial flow rate, lbm/hr,

$$W_t = 358.93 \times d^2 \times k_o \times Y \times F_g \sqrt{h_w \times \rho_m}$$

(27) Viscosity, lbm/ft-sec (μ)
(28) Reynolds number,

$$R_D = \frac{(0.00424)\ (W_t)}{(D)\ (\mu)}$$

(29) Orifice plate discharge coefficient, C
(30) Flow coefficient, K, $K = \dfrac{C}{\sqrt{1 - \beta^4}}$
(31) Base pressure, psia (P_a)
(32) Base temperature, absolute, °R (T_b)
(33) Base compressibility factor (Z_b)
(34) Density at base temperature and pressure,

$$p_B = \frac{2.6991 \times S_g \times P_B}{T_b \times Z_b}$$

(continued)

Copyright ASME International
Provided by IHS under license with ASME
No reproduction or networking permitted without license from IHS

TEST REPORT 5.5.6 PRESSURE RELIEF DEVICE TESTED WITH FUEL GAS (CONT'D)
Observed Data and Computed Results — Flow-Meter Method

(35) Relieving capacity at base condition, cfh

$$q_b = \frac{(W_t)\ (K)}{(K_o)\ (\rho_B)}$$

Observed Data and Computed Results at the Device Inlet

(36) Set pressure, psig (P_{set}) (Burst pressure for nonreclosing device)
(37) Flow rating pressure, psig (P_f)
(38) Temperature at the valve inlet, absolute, °R (T_v)
(39) Reference temperature at the valve inlet, absolute, °R (T_r)
(40) Valve inlet temperature correction, (C)

$$C = \sqrt{T_v/T_R}$$

(41) Valve capacity at reference inlet temperature, cfm, (P_r)

$$q_r = \frac{(q_b)\ (c)}{(60)}$$

Copyright ASME International
Provided by IHS under license with ASME
No reproduction or networking permitted without license from IHS

TEST REPORT FORM 5.5.7 NONRECLOSING PRESSURE RELIEF DEVICE TESTED WITH AIR
Observed Data and Computed Results — Flow Resistance

(1) Test number
(2) Test date
(3) Manufacturer's name
(4) Ratio of specific heats, k
(5) Molecular weight, M_w
(6) Measured relieving capacity, W_h (lbm/hr) (from Form 5.5.4 or 5.5.5)
(7) Base pressure, P_B (psia)
(8) Base temperature, T_o (°R)
(9) Test rig inside diameter, D (ft)
(10) Length between tap A and B, $L_{A\text{-}B}$ (ft)
(11) Length between tap B and C, $L_{B\text{-}C}$ (ft)
(12) Length between tap C and D, $L_{C\text{-}D}$ (ft)
(13) Pressure @ tap B, P_{tapB} (psia)
(14) Differential pressure between taps A and B, $\Delta P_{A\text{-}B}$ (psia)
(15) Differential pressure between taps B and C, $\Delta P_{B\text{-}C}$ (psia)
(16) Differential pressure between taps C and D, $\Delta P_{C\text{-}D}$ (psia)

Flow Resistance Factor Calculation

(17) Mass velocity, G (lb/ft^2-sec)

$$G = W_h/(3600 \times \pi \times D^2/4)$$

(18) Mach number at pipe entrance, M_1

$$M_1 = G/144\ P_B \sqrt{\frac{Y_1^{[(k+1)/(k-1)]}}{32.2 \times M_w \times k/(1544 \times T_o)}}$$

Solve by iteration

$$Y_1 = 1 + \frac{(k-1) \times M_1^2}{2}$$

(19) Pressure at pipe entrance

$$P_1 = P_B \left(\frac{2}{2 + (k-1) \times M_1^2} \right)^{\left(\frac{k}{k-1}\right)}$$

(20) Temperature at pipe entrance

$$T_1 = T_o \times (P_1/P_B)^{(k-1)/k}$$

Calculating total resistance factor at each pressure tap A, B, C, and D. Repeat steps (21) thru (26) for each tap.
(21) Temperature at pressure tap, T_{tap} (°R)

$$T_{tap} = T_1 \left[\frac{-1 + \sqrt{1 + 2 \times (k-1) \times M_1^2 \times (P_1/P_{tap})^2 \times (1 + (k-1) \times M_1^2/2)}}{(k-1) \times M_1^2 \times (P_1/P_{tap})^2} \right]$$

(22) Sonic velocity at pressure tap, C_{tap} (ft/sec)

$$C_{tap} = \sqrt{(32.2 \times k \times 1544 \times T_{tap}/M_w}$$

(23) Specific volume at pressure tap, V_{tap} (ft^3/lbm)

$$V_{tap} = (1544 \times T_{tap})/(M_w \times 144 P_{tap})$$

(24) Mach number at pressure tap, M_{tap}

$$M_{tap} = G \times V_{tap}/C_{tap}$$

(25) Expansion factor at pressure tap, Y_{tap}

$$Y_{tap} = 1 + \frac{(k-1) \times (M_{tap})^2}{2}$$

(continued)

Copyright ASME International
Provided by IHS under license with ASME
No reproduction or networking permitted without license from IHS

TEST REPORT FORM 5.5.7 NONRECLOSING PRESSURE RELIEF DEVICE TESTED WITH AIR (CONT'D)

Observed Data and Computed Results — Flow Resistance

(26) Total resistance factor to pressure tap, K_{tap}

$$K_{tap} = \frac{1/M_1^2 - 1/(M_{tap})^2 - [(k + 1)/2] \times ln[(M_{tap}^2 \times Y_1)/(M_1^2 \times Y_{tap})]}{k}$$

(27) Resistance factor between pressure taps A and B, $K_{A\text{-}B}$

$$K_{A\text{-}B} = K_B - K_A$$

(28) Resistance factor between pressure taps B and C, $K_{B\text{-}C}$

$$K_{B\text{-}C} = K_C - K_B$$

(29) Resistance factor between pressure taps C and D, $K_{C\text{-}D}$

$$K_{C\text{-}D} = K_D - K_C$$

(30) Friction factor, f

$$f = K_{A\text{-}B} \times D/(4 \times L_{A\text{-}B})$$

(31) Obtain the viscosity of air at T_B and P_B μ (centipoise)

(32) Reynolds number, N_{Re}

$$N_{Re} = D \times G/(\mu/1488)$$

(33) Pipe roughness E (in.)

$$E = 44.4 \times D \times \left[10^{(-1/(4 \times \sqrt{f}))} - 1.256/(N_{Re} \times \sqrt{f})\right]$$

(34) Pipe resistance factor between pressure taps B and C, $K_{pipe\ B\text{-}C}$

$$K_{pipe\ B\text{-}C} = \frac{4fL_{B\text{-}C}}{D}$$

(35) Test object individual flow resistance, K_{Ri}

$$K_{Ri} = K_{B\text{-}C} - K_{pipe\ B\text{-}C}$$

GENERAL NOTE: Equations for calculations are in accordance with Levenspiel paper, Lapple paper, Perry Handbook, and Colebrook equation.

Colebrook. "Perry's Chemical Engineer's Handbook," Sixth Ed. New York: McGraw-Hill Book Co. 1984.
Green, P. W. (Ed.) "Perry's Chemical Engineer's Handbook," Sixth Ed. New York: McGraw-Hill Book Co. 1984.
Lapple, C. E. "Isothermal and Adiabatic Flow of Compressible Fluids." Trans. AIChE, 39, pp. 385–432. 1943.
Levenspiel, O. "The Discharge of Gases from a Reservoir Through a Pipe." AIChE Journal 23:3, pp. 402–403. May 1977.

Copyright ASME International
Provided by IHS under license with ASME
No reproduction or networking permitted without license from IHS

SECTION 6
TEST SUMMARY REPORT FORM

6.1 GENERAL INSTRUCTIONS

(a) The Report of Test shall be prepared for the purpose of formally recording observed data and computed results. It shall contain sufficient supporting information to prove that all objectives of any tests conducted in accordance with this Code have been attained.

(b) The procedures described in Section 5 are recommended for use in computing the test results.

(c) The Report of Test shall include Parts I to IV as listed below. It may also be appropriate to include any of the remaining sections depending on the circumstances, or by agreement of multiple parties of the test.

I General Information
II Summary of Test Results
III Description of Device Under Test
IV Observed Data and Computed Results
V Test Conditions and Corrections Agreements
VI Test Methods and Procedures
VII Supporting Data
VIII Graphical Presentation of Back Pressure-Test Results

The following outline gives a discussion of each Part of the Test Report.

6.2 PART I: GENERAL INFORMATION

This Part shall include the following items:

(a) date of test

(b) location of test facilities

(c) device manufacturer's name

(d) manufacturer's serial number and complete identification of device

(e) inlet and outlet connections (stating size, pressure ratings, and type such as screwed, flanged, etc.)

(f) test conducted by

(g) representatives of interested parties

(h) object of test

(i) fluid through device (wherever applicable give name, molecular weight, specific gravity, and ratio of specific heats)

6.3 PART II: SUMMARY OF RESULTS

This Part shall include those quantities and characteristics which describe the performance of the device at test conditions. The Test Summary Report Form for the particular test shall list the quantities, characteristics, and units of measurement required for the report.

6.4 PART III: DESCRIPTION OF DEVICE UNDER TEST

This Part may include assembly drawings, manufacturing drawings, and measured dimensions. Manufacturing drawings for these Parts may be submitted with the assembly drawing. The dimensions of these Parts shall include the following, if applicable:

(a) bore diameter, in.

(b) seat diameter, in.

(c) seat angle, deg

(d) inlet opening diameter, in.

(e) ratio of throat diameter to the diameter of the inlet opening

(f) actual discharge area, $in.^2$

Forms 6.5.1 through 6.5.4 are to be used to record this information for steam; liquids and water; or air, gas, or fuel gas.

6.5 PART IV: OBSERVED DATA AND COMPUTED RESULTS

This Part shall include a record of data and calculations required for the results of the tests. Computer results shall include final flow measurement uncertainty. The data shall have been corrected for instrument calibrations and conditions prevailing for each test run.

The calculations for measured relieving capacity may be made in accordance with the procedures in Section 5 and reported in the recommended Report of Test using Forms 6.5.1 through 6.5.4 as applicable. These forms follow this Section. Calculation forms are provided in Section 5 for the following listed fluids:

Copyright ASME International
Provided by IHS under license with ASME
No reproduction or networking permitted without license from IHS

(a) steam
(b) air or gas
(c) fuel gas
(d) liquids
(e) water

6.6 PART V: TEST CONDITIONS AND CORRECTIONS AGREEMENTS

Operating conditions, such as those listed below, which have been agreed upon prior to the test shall be reported for each test:

(a) device-maximum-inlet pressure
(b) device-inlet temperature
(c) setting of device
(d) back pressure (built-up and/or superimposed)

6.7 PART VI: TEST METHODS AND PROCEDURES

This Part shall include a detailed description of the instruments and apparatus used to measure the various quantities and procedures for observing the mechanical characteristics of the device under test.

6.8 PART VII: SUPPORTING DATA

This Part shall include pertinent material supplementing data presented elsewhere in the test report, whereby an independent verification of the report results can be made. This material may include, but not necessarily be limited to

(a) instrument calibration records,
(b) detailed log sheets, and
(c) sample calculations.

6.9 PART VIII: GRAPHICAL PRESENTATION OF BACK-PRESSURE TEST RESULTS

Where a series of tests have been made with several back pressures for a given opening pressure, the test results can be presented by plotting curves, such as the following:

(a) *Abscissa:* Back pressures in percent of the opening pressure at atmospheric back pressure.

Ordinate: Percent variation of opening pressures from the opening pressure at atmospheric back pressure.

(b) *Abscissa:* Back pressures in percent of the relieving pressure at atmospheric back pressure.

Ordinate: Relieving capacities in percent of relieving capacity at atmospheric back pressure.

(c) *Abscissa:* Back pressures in percent of the opening pressure at atmospheric back pressure.

Ordinate: Percent variation of closing pressures from the closing pressure at atmospheric back pressure.

Copyright ASME International
Provided by IHS under license with ASME
No reproduction or networking permitted without license from IHS

TEST SUMMARY REPORT FORM 6.5.1
Pressure and Relief Valve Performance Test Report
STEAM

General Information

(1) Test number
(2) Test date
(3) Location
(4) Manufacturer's name and address
(5a) Valve type or model number
(5b) Valve serial or identification number
(5c) Inlet connection (size, pressure rating, and type)
(5d) Outlet connection (size, pressure rating, and type)
(5e) Stamped pressure and tolerance, psig
(6) Test objective

Summary of Test Results

(7) Simmer, psig (factory setting)
(8) Simmer, psig (reset)
(9) Set pressure, psig (factory setting)
(10) Set pressure, psig (reset)
(11) Reseating pressure, psig (factory setting)
(12) Reseating pressure, psig (reset)
(13) Blowdown, psi (factory setting)
(14) Blowdown, psi (reset)
(15) Back pressure, psig, superimposed and/or built-up
(16) Flow-rating pressure (valve inlet), psig
(17) Valve-disk lift, in.
(18) Measured relieving capacity, lbm/hr
(19) Final flow measurement uncertainty

Measured Valve Dimensions

(20) Bore diameter, in.
(21) Seat diameter, in.
(22) Seat angle, deg
(23) Valve-inlet-opening diameter, in.
(24) Ratio of valve disk lift to bore diameter
(25) Ratio of bore diameter to the diameter of the valve-inlet opening
(26) Actual discharge area, $in.^2$
(27) Remark and conclusions concerning the objective of the test and applicable items such as chatter, flutter, vibration, etc.

Test Supervisor (Signed) _____ Date _____

Copyright ASME International
Provided by IHS under license with ASME
No reproduction or networking permitted without license from IHS

TEST SUMMARY REPORT FORM 6.5.2
Pressure and Relief Valve Performance Test Report
LIQUIDS AND WATER

General Information

(1) Test number
(2) Test date
(3) Location
(4) Manufacturer's name and address
(5a) Valve type or model number
(5b) Valve serial or identification number
(5c) Inlet connection (size, pressure rating, and type)
(5d) Outlet connection (size, pressure rating, and type)
(5e) Stamped pressure, psig
(6) Test objective
(7) Test fluid
(8) Specific gravity (ideal)

Summary of Test Results

(9) Set pressure, psig (factory setting)
(10) Set pressure, psig (reset)
(11) Reseating pressure, psig (factory setting)
(12) Reseating pressure, psig (reset)
(13) Back pressure, psig, superimposed and/or built-up
(14) Flow-rating pressure (valve inlet), psig
(15) Valve-disk lift, in.
(16) Measured relieving capacity, lbm/hr
(17) Final flow measurement uncertainty

Measured Valve Dimensions

(18) Bore diameter, in.
(19) Seat diameter, in.
(20) Seat angle, deg
(21) Valve-inlet-opening diameter, in.
(22) Ratio of valve disk lift to bore diameter
(23) Ratio of bore diameter to the diameter of the valve-inlet opening
(24) Actual discharge area, $in.^2$
(25) Remarks and conclusions concerning the objective of the test and applicable items such as chatter, flutter, vibration, etc.

Test Supervisor (Signed) _____ Date _____

Copyright ASME International
Provided by IHS under license with ASME
No reproduction or networking permitted without license from IHS

TEST SUMMARY REPORT FORM 6.5.3
Pressure and Relief Valve Performance Test Report
AIR, GAS, OR FUEL GAS

General Information

(1) Test number
(2) Test date
(3) Location
(4) Manufacturer's name and address
(5a) Valve type or model number
(5b) Valve serial or identification number
(5c) Inlet connection (size, pressure rating, and type)
(5d) Outlet connection (size, pressure rating, and type)
(5e) Stamped pressure and tolerance, psig
(6) Test objective
(7) Test fluid
(8) Specific gravity (ideal)
(9) Ratio of specific heats
(10) Molecular weight

Summary of Test Results

(11) Start to discharge, psig (factory setting)
(12) Start to discharge pressure, psig (reset)
(13) Simmer, psig (factory setting)
(14) Simmer, psig (reset)
(15) Set pressure, psig (factory setting)
(16) Set pressure, psig (reset)
(17) Reseating pressure, psig (factory setting)
(18) Reseating pressure, psig (reset)
(19) Resealing pressure, psig (factory setting)
(20) Resealing pressure, psig (reset)
(21) Blowdown, psig (factory setting)
(22) Blowdown, psig (reset)
(23) Back pressure, psig, superimposed and/or built-up
(24) Flow-rating pressure (valve inlet), psig
(25) Valve-disk lift, in.
(26) Measured relieving capacity, lbm/hr
(27) Final flow measurement uncertainty

Measured Valve Dimensions

(28) Bore diameter, in.
(29) Seat diameter, in.
(30) Valve-inlet-opening diameter, in.
(31) Ratio of valve disk lift to bore diameter
(32) Ratio of bore diameter to the diameter of the valve-inlet opening
(33) Actual discharge area, $in.^2$
(34) Remarks and conclusions concerning the objective of the test and applicable items such as chatter, flutter, vibration, etc.

Test Supervisor (Signed) _____ Date _____

Copyright ASME International
Provided by IHS under license with ASME
No reproduction or networking permitted without license from IHS

TEST SUMMARY REPORT FORM 6.5.4
Nonreclosing Pressure Relief Device
Performance Test Report
AIR, GAS, OR FUEL GAS

General Information

(1) Test number
(2) Test date
(3) Location
(4) Manufacturer's name and address
(5a) Device type or model number
(5b) Device lot or identification number
(5c) Connection (size, pressure rating, and type)
(5d) Marked set pressure and tolerance, psig
(5e) Minimum net flow area, $in.^2$ (Manufacturer specified)
(6) Test objective
(7a) Test fluid for set pressure
(7b) Test fluid for flow test
(8) Specific gravity (ideal)
(9) Ratio of specific heats
(10) Molecular weight

Summary of Test Results

(11) Set pressure, psig
(12) Flow-rating pressure at device inlet, psig
(13) Resistance factor, K_{Ri}

Measured Device Dimensions

(14) Minimum device bore diameter, in.
(15) Remarks and conclusions concerning the objective of the test and applicable items such as vibrations, etc.

Test Supervisor (Signed) _____ Date _____

Copyright ASME International
Provided by IHS under license with ASME
No reproduction or networking permitted without license from IHS

PART II
IN-SERVICE AND BENCH TESTING

(Part II includes the preceding Sections 1 and 2 in addition to the subsequent Sections 3 through 6 and appendicies.)

SECTION 3 — GUIDING PRINCIPLES

3.1 ITEMS ON WHICH AGREEMENT SHALL BE REACHED

The parties to the test shall reach agreement on the following items prior to conducting the test:

(a) object of the test

(b) parties to the test

(c) test site

(d) testing fluid

(e) methods of measurement, instrumentation, and equipment to be used (calibration of instruments shall be in accordance with para. 3.7)

(f) number, size, type, condition, source, and set pressure of the device(s) to be tested

(g) method of determining seat tightness

(h) person(s) who shall conduct the test

(i) the written test procedure which shall include the observation and readings to be taken and recorded to comply with the object or objectives of the test

3.2 QUALIFICATION OF PERSON CONDUCTING THE TEST

A person who conducts the test shall have a working knowledge of pressure relief device operating characteristics. The person shall have practical experience in the safe and accurate operation of the testing equipment.

3.3 RESPONSIBILITY OF PERSON CONDUCTING THE TEST

A person who meets the qualifications of para. 3.2 shall be present at all times during the test and shall be solely responsible to ensure that all persons who are involved in taking readings, making pressure and temperature adjustments, or any other function that will affect the test results are fully informed as to the correct method of performing such functions. This person conducting the test shall also be responsible to ensure that the written test procedures are followed. This person shall sign and date the test report, thereby verifying to the best of his knowledge that the report is correct, and that the test was conducted in accordance with the written test procedures. This person shall verify that the instruments have been calibrated as required by para. 3.7.

3.4 TEST APPARATUS

Procedures and arrangement of the test apparatus shall be in accordance with Section 4.

3.5 PRELIMINARY TRAINING

Sufficient training shall be conducted to ensure that operating personnel are completely familiar with the test equipment and with their respective assignments.

3.6 SPARE INSTRUMENTS

If intended for use as replacements during the test, spare instruments shall be calibrated in accordance with para. 3.7.

3.7 CALIBRATION OF INSTRUMENTS

Each instrument used during the test shall be serialized or otherwise positively identified and shall be calibrated against certified equipment having known valid relationships to nationally recognized standards. Each instrument, depending on the type, shall be calibrated in accordance with this Section. Records of instrument calibrations shall be available for review by the interested parties.

Copyright ASME International
Provided by IHS under license with ASME
No reproduction or networking permitted without license from IHS

3.7.1 Pressure. Pressure-measuring instruments shall be calibrated in accordance with ASME PTC 19.2, Pressure Measurements, within thirty days prior to the tests. Portable pressure measuring instruments shall be calibrated at a frequency to ensure that measurements are within the uncertainty limits. Calibration of other means of indicating or recording pressure shall be agreed upon by the interested parties.

3.7.2 Temperature. Temperature-measuring instruments shall be calibrated in accordance with ASME PTC 19.3, Temperature Measurement. Instruments of the types listed in para. 4.2.1(a), except bimetallic thermometers, shall be calibrated to at least one temperature within a 90-day period preceding the test or series of tests. Bimetallic thermometers shall be calibrated before and after each test or series of tests. Calibration of other means of indicating or recording temperature shall be agreed upon by the interested parties.

3.8 ADJUSTMENTS DURING TEST

If adjustments are found to be necessary during in-service or bench testing, a sufficient number of tests shall be performed to determine final operating characteristics.

3.9 RECORDS AND TEST RESULTS

The test records shall include all observations, measurements, instrument readings, and instrument identification (if required) for the objective(s) of the test. The parties of the test shall agree upon the responsibility of record retention and distribution. Corrections to data and corrected values shall be entered separately in the test record. The test shall be reported in accordance with Section 6, Test Summary Report Form.

3.10 MEASUREMENT UNCERTAINTY

A pretest determination shall be performed to determine that the limits of uncertainty of the final measurement specified in Section 1 can be met by the specified instrumentation and procedures. A post-test uncertainty analysis shall also be performed unless the parties to the test agree and verify that the specified instrumentation and procedures, including data scatter, were used and carried out in accordance with the test specification, confirming thereby the post-test validity of the pretest uncertainty determination. A guide for such determination is given in ASME PTC 19.1, Test Uncertainty. These determinations shall be documented by the facility and available for review.

Copyright ASME International
Provided by IHS under license with ASME
No reproduction or networking permitted without license from IHS

SECTION 4 INSTRUMENTS AND METHODS OF MEASUREMENTS

4.1 GENERAL

This Section describes the instruments, methods, procedures, and precautions that shall be used in testing pressure relief devices under this Code. The Performance Test Code Supplements on Instruments and Apparatus provide authoritative general information concerning instruments and their use, and may be consulted for such information.

4.2 INSTRUMENTATION

Where measurements of temperature, pressure, or lift are required in this Section, the instrumentation used shall comply with the following specifications.

4.2.1 Temperature. Instructions on thermometers or thermocouples and associated instruments are given in ASME PTC 19.3, except that commercial metal-encased thermometers shall not be used in tests conducted under this Code. Other means of temperature measurement and indication may be used, provided they are of the same or greater degree of accuracy as for those described therein.

(a) Depending on operating conditions, or convenience, the temperature may be measured with certified or calibrated liquid-in-glass thermometers, bimetallic thermometers, resistance-type thermometers, or thermocouples. All of the above may be inserted directly into the pipe or into wells except for liquid-in-glass thermometers, which must be inserted into wells. The installation of the temperature-measuring device directly into the pipe, without the addition of a well, is desirable for temperatures below 300°F.

(b) The following precautions shall be taken when making any temperature measurements.

(1) No significant quantity of heat shall be transferred by radiation or conduction to or from the temperature-measuring device other than by the temperature of the medium being observed (see ASME PTC 19.3).

(2) The immediate vicinity of the point of insertion and the external projecting parts shall be insulated.

(3) The temperature-measuring device shall extend across the center line in pipes of small diameter or shall be inserted at least 6 in. into the fluid stream in pipes over 12 in. in diameter.

(4) Temperature-measuring devices installed in pipes carrying compressible fluids shall, wherever possible, be installed at locations where the maximum fluid velocity does not exceed 100 ft/sec. Where such an installation is not possible, it may be necessary to correct the temperature readings to the appropriate static or total temperature (see ASME Fluid Meters, para. 1-3-17).

(5) The temperature-measuring devices shall be inserted in locations so as to measure temperatures which are representative of the flowing medium as described under test arrangements.

(c) Thermometer wells, when used, shall be of the type shown in ASME PTC 19.3. They shall be as thin-walled and of as small diameter as practicable; their outer surfaces shall be substantially free from corrosion or foreign matter. The well shall be filled with a suitable fluid. Mercury should not be used for this fluid since its very low vapor pressure presents a serious health hazard to personnel.

(d) Thermocouples, if employed, shall have a welded hot-junction and must be calibrated together with their extension wires over the anticipated operating range. They shall be constructed of materials suitable for the temperature and for the fluid being measured. The electromotive force of a thermocouple shall be measured by a potentiometric instrument or millivoltmeter of such precision that the accuracy of the overall system is within the limit specified in para. 1.3. The cold junction shall be established by an ice bath, reference standard, or by a compensating circuit built into the potentiometer.

4.2.2 Pressure Measurements. Instruments on pressure gages, water U-tubes, differential gages, and manometers are given in ASME PTC 19.2. Other means of pressure measurements and indication may be used provided they are of the same or greater degree of accuracy as those described therein.

(a) Pressure-measuring stations shall be located in the region where the flow is essentially parallel to the pipe or vessel wall. For the measurement of

Copyright ASME International
Provided by IHS under license with ASME
No reproduction or networking permitted without license from IHS

static gage-pressure differentials below 15 psi, liquid manometers may be used.

(b) Pressure relief device-inlet pressure shall be the static pressure as measured with a pressure tap positioned, as shown in Figs. 11 and 12.

(c) Back pressure shall be the static pressure measured with a pressure tap positioned, as shown in Figs. 5, 7, and 9.

(d) Proper corrections to the pressure readings shall be made if there is a height of water or other liquid between the point at which the pressure is to be measured and the pressure instrument.

4.2.3 Valve-Lift Indicator. Instructions for use of lift indicators are given in ASME PTC 19.14. Other means of linear measurement and indication may be used provided they introduce the same or less measured uncertainty.

(a) The lift of the valve disk, under testing conditions, shall be determined by suitable means to whatever degree of accuracy is imposed by the procedure under which the valve is being tested.

(b) In open- or vented-bonnet designs, when the top of the spindle may be exposed during the tests, an indicator of appropriate range may be attached to the top of the valve to indicate the movement of the spindle. In closed-bonnet valves where the top of the spindle cannot be exposed, arrangements shall be made to permit indicating, reading, or recording spindle movement outside the valve bonnet or cap. In either case, care must be exercised that the arrangement does not impose an additional load on the valve spindle or interfere with the operation of the valve.

Erroneous lift indications are possible under conditions of testing valves with fluids at elevated temperatures. The temperature of the fluid may cause thermal expansion of the valve parts, producing an erroneous initial reading on the lift indicator. When extreme accuracy in results is desired, measures shall be taken to distinguish between this thermal expansion and actual valve lift.

4.3 IN-SERVICE TESTING PROCEDURES

4.3.1 General Features of Tests

(a) These valve tests are designed to assure service readiness for valve set pressure and operation, not necessarily to demonstrate total valve conformance to Code or specifications. The test methods per paras. 4.3.2 or 4.3.3 are acceptable to meet this requirement subject to agreement between the interested parties.

(b) As a safety precaution, all operating personnel shall be properly trained in the appropriate test equipment procedures, test preparations, and emergency plans. Care shall be taken to protect personnel from elevated temperature, noise levels, and escaping fluids during testing. Prior to testing a visual inspection of the valve is recommended. Observations should include the following as a minimum:

(1) gagging of the valve

(2) valve leakage

(3) inspection of discharge piping

(4) corrosion or residue

(5) installation of appropriate cap and lever

(6) seal integrity (to ensure against unauthorized adjustment)

(7) proper valve installation.

CAUTION: Valves should be gagged during inspection when personnel are within close proximity to the valve provided adequate overpressure protection of the system is maintained. The gag should be removed from the valve following inspection and prior to the test. Gagging of valves should be performed in accordance with the instructions outlined by the valve manufacturer.

(c) A suitable pressure measurement instrument meeting the requirements of para. 4.4.2 shall be installed at a location which allows accurate measurement of system pressure at the valve inlet. Other measurement instruments used with various test devices shall be in conformance with the requirements of the device manufacturer.

4.3.2 Test Methods

(a) Testing with System Pressure. The pressure to the valve inlet is increased until the set pressure is reached. Observe and record the set pressure of the pressure relief device and any other desired or pertinent valve characteristics. Gradually decrease the inlet pressure until the valve closes and, if required, record the reseat pressure. This test shall be repeated such that the operational characteristics can be computed in accordance with the requirements of para. 5.3.

Test conditions such as ambient temperature, valve temperature, fluid conditions, back pressures and installation conditions should approximate the normal operating conditions under which the pressure relief valve would be exposed.

Seat leakage testing should be conducted per the requirements of para. 4.5.

Copyright ASME International
Provided by IHS under license with ASME
No reproduction or networking permitted without license from IHS

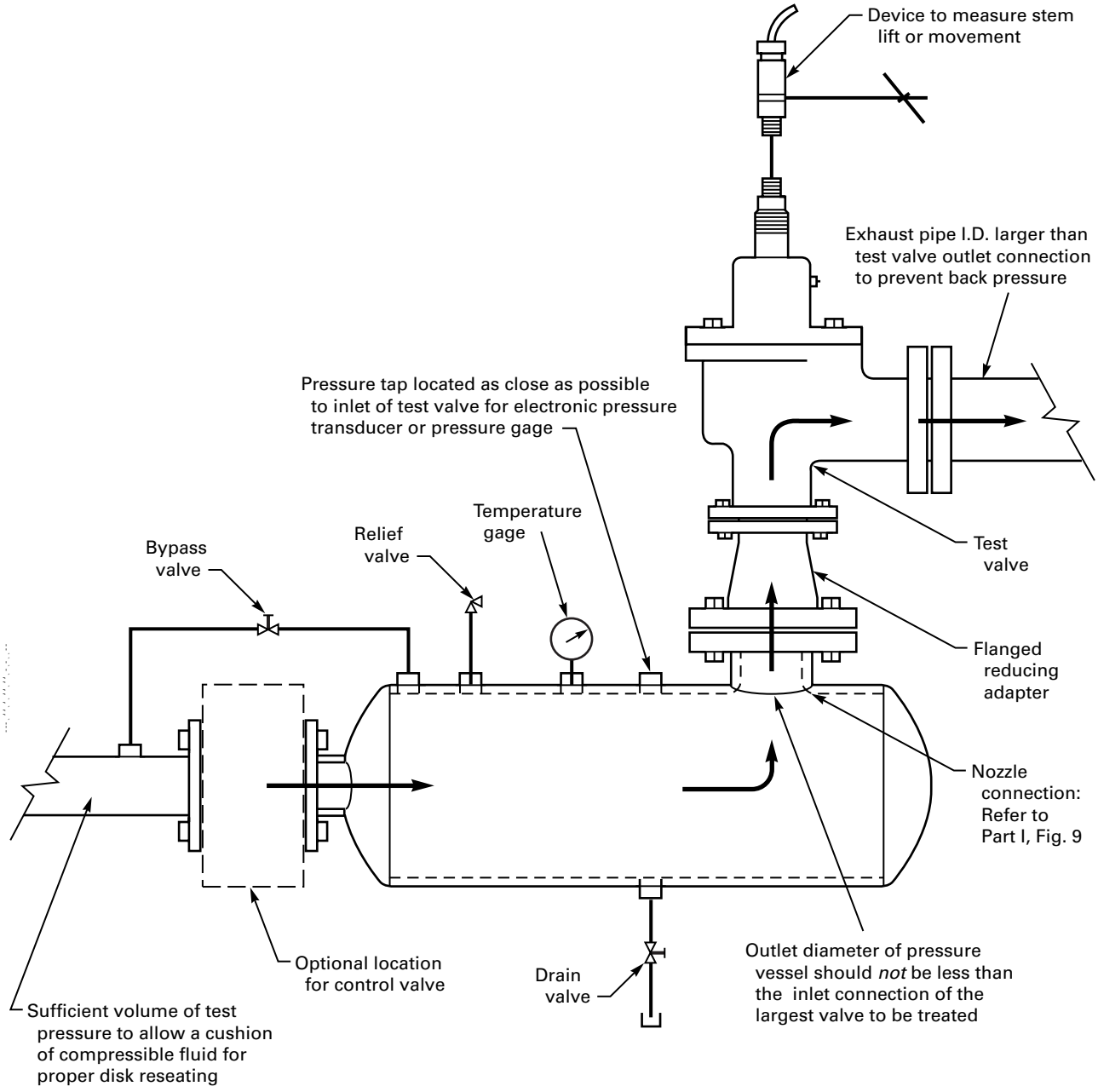

FIG. 11 RECOMMENDED ARRANGEMENT FOR TESTING VALVES WITH COMPRESSIBLE FLUIDS

Copyright ASME International
Provided by IHS under license with ASME
No reproduction or networking permitted without license from IHS

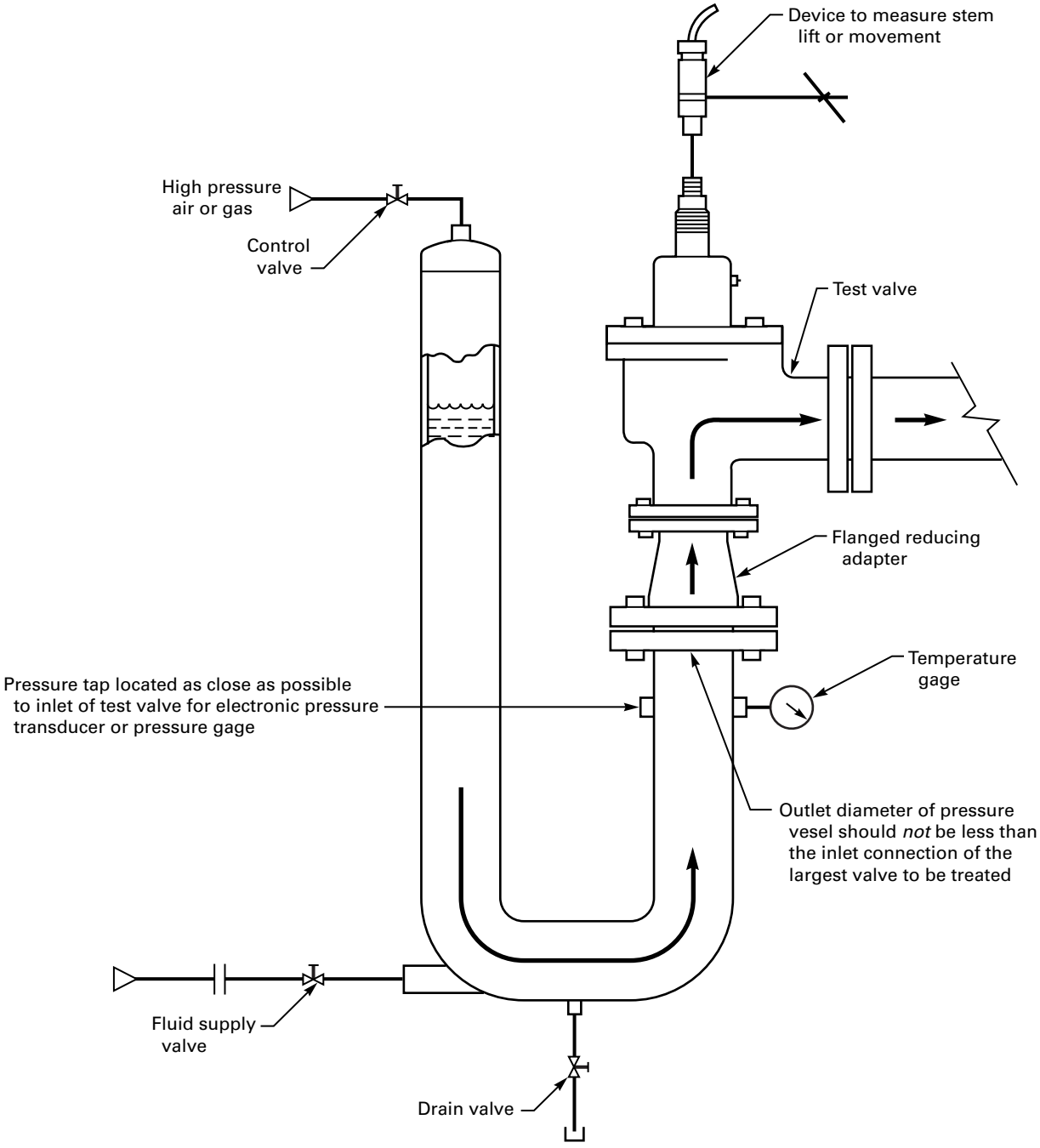

FIG. 12 RECOMMENDED ARRANGEMENT FOR TESTING VALVES WITH INCOMPRESSIBLE FLUIDS

Copyright ASME International
Provided by IHS under license with ASME
No reproduction or networking permitted without license from IHS

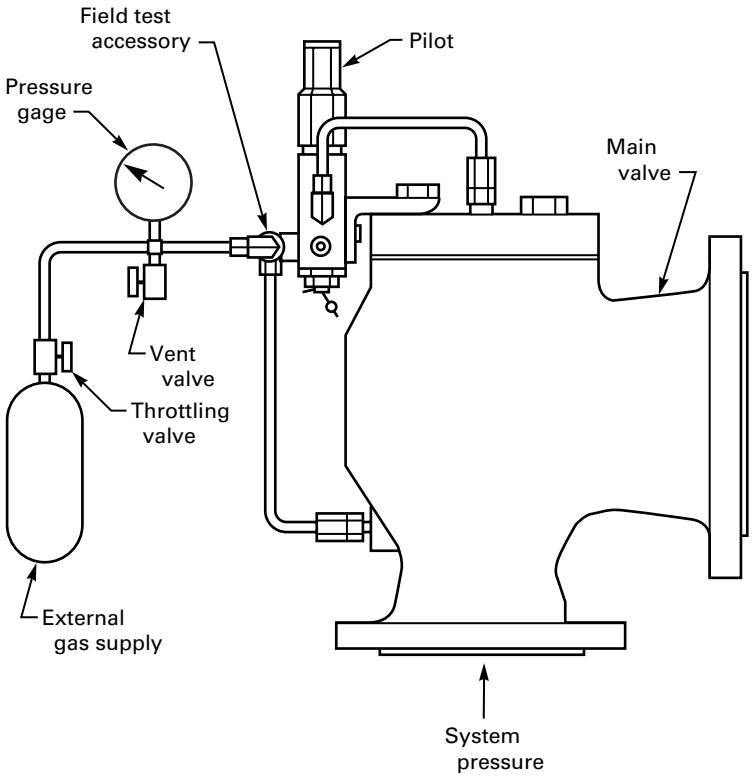

FIG. 13 PILOT-OPERATED PRESSURE RELIEF VALVE FIELD TEST ACCESSORY

(b) Testing with Other Pressure Sources. On installations with pilot-operated pressure relief valves where increasing system pressure above normal operating pressure may not be desirable, a field test accessory may be used in accordance with the valve manufacturer's recommendations to determine set pressure. Refer to Fig. 13 for a typical arrangement using a field test accessory.

Tests by this method shall be repeated such that the operational characteristics can be computed in accordance with the requirements of para. 5.3.

(c) Testing with Auxiliary Lift Assist Devices. On valve installations where increasing system pressure above normal operating pressure may not be desirable, auxiliary lift devices may be used in accordance with the valve manufacturer's recommendations. The lift assist device, in conjunction with system pressure, provides a supplemental force to overcome the spring force on the valve disk. The calibrated lift assist device is attached to the stem of the valve and load is applied while maintaining constant system pressure until the valve opens. The valve opening is characterized by an audible sound, momentary drop in assist load and/or system fluid release. At the time of the opening, simultaneous readings of system pressure and applied load are recorded. The load is released from the lift assist device. Lift assist devices may be operated manually, semi-automatically, or automatically. The valve set pressure is determined from graphs and/or equations that were based on lift assist device calibrations for the specific valve design, size, and fluid conditions of the test. This test shall be repeated such that the operational characteristics can be computed in accordance with the requirements of para. 5.3. Valve reseat pressure cannot be determined using this test method. Valve control-ring adjustments shall be set to original test data.

CAUTION: Auxiliary load devices can cause valve damage at inlet pressure too low relative to valve-set pressure.

4.3.3 In-Service Verification of Pressure Relieving Capacity

(a) If the parties of the test agree, an approximation of the relief valve flowing capacity can be determined in-service following completion of one of the tests described in para. 4.3.2. In most cases,

Copyright ASME International
Provided by IHS under license with ASME
No reproduction or networking permitted without license from IHS

the purpose of such tests is to verify that the pressure relieving devices in service are of adequate size to prevent an overpressure condition.

PRECAUTION

Precautions must be taken during the tests to ensure that the maximum allowable working pressure of the system being protected is not exceeded beyond permissible safe limits. Therefore, the safety procedures noted in Part II, para. 4.3.1(b) should be applied during the test.

(b) An accumulation test may be used if a quantitative value of capacity is not desired. Such a test would be conducted by shutting off all the outlets from the vessel and maximizing the energy and mass flow input which will be relieved by the pressure relief device. If the device is properly sized, the pressure in the vessel should not rise above a predetermined acceptable point. This method should not be used on a steam boiler with a superheater or reheater on a high temperature water boiler.

(c) An estimated quantitative measure of flowing capacity can be determined for pressure relief valves mounted on steam boilers. As in the accumulation test above, all steam discharge outlets are shut while firing the boiler at a controlled rate sufficient to keep the valve open at a specified pressure. While maintaining steady steaming conditions over a long period of time, pressure relief valve capacity may be estimated from a measure of the rate of feed water input to the boiler.

(d) Other test arrangements may be used if agreed to by all interested parties. As an example, the arrangements may include the attachment of a vessel to the valve outlet for collection of the discharged fluid and release to atmosphere through a flow metering device. Precautions should be taken to ensure that the built-up back pressure which may result does not affect the valve operation.

4.4 BENCH TESTING PROCEDURES

4.4.1 General Features of Tests. There shall be assurance that the pressure relief devices are properly assembled with components that meet the design specification requirements. The pressure relief device shall be clean and ready for test.

The pressure relief device to be tested shall be installed on a test vessel with adapter fittings (flanged, screwed, welded, etc.). See Fig. 4 for acceptable adapter fitting contours for minimum inlet pressure drop. Other adapter fittings may be used provided the accuracy of the test is not affected. Operating and environmental conditions shall be maintained in accordance with the requirements of the procedure used. The duration of the test shall be that required to obtain the necessary performance data under stable conditions.

4.4.2 Compressible Fluids

(a) Valves marked for steam service shall be tested on steam. Valves marked for air, gas, or vapor service shall be tested with air or gas.

(b) Pressure relief valve inlet pressure shall be the static pressure as measured with a pressure tap positioned as shown in Fig. 11.

NOTE: For steam testing, the quality of the steam may affect the operational characteristics of the valve. The steam quality may be affected by inadequate moisture separation, an underheated test vessel, and/or improper steam trap operation.

(c) Increase the pressure at the valve inlet to 90% of the expected set pressure. Then increase at a rate equal to 2% of set pressure per second or at a rate which permits accurate pressure readings. Observe and record the set pressure and other pertinent valve characteristics. Decrease the inlet pressure until the valve closes.

This test shall be repeated such that operational characteristics can be computed in accordance with para. 5.3.

(d) To obtain an accurate reseat pressure measurement, an adequate volume of test medium is required at the valve inlet. When determining this volume, consideration must be given to the cycle time and size of the device being tested relative to the rate of supply of the test medium.

4.4.3 Incompressible Fluids

(a) Valves marked for liquid service shall be tested with water or other suitable liquid.

(b) Pressure relief valve inlet pressure shall be the static pressure as measured with a pressure tap positioned as shown in Fig. 12.

(c) Same as above [para. 4.4.2(c)].

4.5 SEAT TIGHTNESS TEST

Seat tightness can be determined, when required, by using API Standard 527, or another method agreed to by the parties of the test. These methods may include wet paper towel, soap bubble, cold bar, mirror, or fluid collection tests.

--`,`,`,,`,,`,`,,`---

Copyright ASME International
Provided by IHS under license with ASME
No reproduction or networking permitted without license from IHS

SECTION 5 COMPUTATION OF RESULTS

5.1 CORRECTION OF MEASURED VARIABLES

The values of measured variables shall be corrected in accordance with instrument calibrations. No other corrections to the data are permitted.

5.2 REVIEW OF INSTRUMENT READINGS

Before calculations are undertaken, the instrument readings, as recorded in the log, shall be reviewed for inconsistency and large fluctuation in accordance with ASME PTC-19.1.

5.3 COMPUTATION OF OPERATIONAL CHARACTERISTICS

When specified in Section 4 to determine specific operational characteristics, the result will be computed as follows.

5.3.1 Set Pressure. The computed set pressure will be the average of at least the last three measured set pressures once established and stabilized. A set pressure is considered stable when the measured set pressures show no consistent upward or downward trend and all are within 1% or one-half psi, whichever is greater, of the computed set pressure.

5.3.2 Blowdown. The computed blowdown shall be the average of the individual blowdowns of those tests used to determine the computed set pressure in para. 5.3.1.

5.3.3 Lift. The computed lift shall be the average of the individual lift measurements of those tests used to determine the computed set pressure.

Copyright ASME International
Provided by IHS under license with ASME
No reproduction or networking permitted without license from IHS

SECTION 6 TEST SUMMARY REPORT FORM

6.1 GENERAL INSTRUCTIONS

(a) The Report of Test shall be prepared for the purpose of formally recording observed data and computed results. It shall contain sufficient supporting information to prove that all objectives of any tests conducted in accordance with this Code have been attained.

(b) The procedures described in Section 5 are recommended for use in computing the test results.

(c) The Report of Test shall include Parts I to IV as listed below, and may include any of the remaining parts as agreed to by the contracting parties.

I General Information
II Summary of Test Results
III Description of Valve Under Test
IV Observed Data and Computed Results
V Test Conditions and Corrections Agreement
VI Test Methods and Procedures
VII Supporting Data

The following outline gives a discussion of each part of the Test Report.

6.2 PART I: GENERAL INFORMATION

This Part shall include the following items:
(a) data of test
(b) location of test facilities
(c) valve manufacturer's name
(d) valve type or model number
(e) valve identification
(f) marked set pressure
(g) inlet and outlet connection sizes
(h) person conducting test
(i) operational characteristics to be measured
(j) test fluid

6.3 PART II: SUMMARY OF RESULTS

This Part shall include those computed values with units of measurement and characteristics listed in para. 6.2 which describe the performance of the valve at test conditions.

6.4 PART III: DESCRIPTION OF VALVE UNDER TEST

This Part may include assembly drawings, manufacturing drawings, and measured dimensions. Manufacturing drawings for these Parts may be submitted with the assembly drawing. The dimensions of these Parts shall include the following, if applicable:
(a) bore diameter, in.
(b) seat diameter, in.
(c) seat angle, deg
(d) inlet opening diameter, in.
(e) ratio of throat diameter to the diameter of the inlet opening
(f) actual discharge area, $in.^2$

6.5 PART IV: OBSERVED DATA AND COMPUTED RESULTS

This Part shall include a record of data and calculations required for the results of the tests. The data shall have been corrected for instrument calibrations and conditions prevailing for each test run.

6.6 PART V: CONTRACT AND AGREED TEST CONDITIONS CORRECTIONS

Operating conditions, such as those listed below, which have been agreed upon prior to the test shall be reported for each test:
(a) valve-maximum-inlet pressure
(b) valve-inlet temperature
(c) valve temperature profile

6.7 PART VI: TEST METHODS AND PROCEDURES

This Part shall include a description of the instruments and apparatus used to measure the various quantities and procedures for observing the mechanical characteristics of the valve under test.

6.8 PART VII: SUPPORTING DATA

This Part shall include pertinent material supplementing data presented elsewhere in the report,

Copyright ASME International
Provided by IHS under license with ASME
No reproduction or networking permitted without license from IHS

whereby an independent verification of the report results can be made. This material may include, but not necessarily be limited to

(a) instrument calibration records,
(b) detailed log sheets,
(c) sample calculations, and
(d) graphical presentation of data.

Copyright ASME International
Provided by IHS under license with ASME
No reproduction or networking permitted without license from IHS

APPENDIX I
SI (METRIC) UNITS AND CONVERSION FACTORS

Copyright ASME International
Provided by IHS under license with ASME
No reproduction or networking permitted without license from IHS

TABLE IA SI (METRIC) UNITS

Quantity	Unit	Symbol	Other Units or Limitations
Space and Time			
plane angle	radian	rad.	degree (decimalized)
length	meter	m	
area	square meter	m^2	
volume	cubic meter	m^3	liter (L) for fluids only (use without prefix)
time	second	s	minute (min), hour (h), day (d), week, and year
Periodic and Related Phenomena			
frequency	hertz	Hz	hertz = cycle per second
rotational speed	radian per second	rad/s	rev. per minute (rpm)
fluence	nvt		
neutron energy	MeV	E_n	
sound (pressure level)	decibel	db	
Mechanics			
mass	kilogram	kg	
density		kg/m^3	
moment of inertia		$kg \cdot m^2$	
force	newton	N	
moment or force (torque)	newton-meter	N•m	
pressure and stress	pascal	Pa	(pascal = newton per square meter)
energy, work	joule	J	kilowatt-hour (kW•h)
power	watt	W	
impact strength	joule	J	
section modulus	cubic meter	m^3	
moment of section (second moment of area)		m^4	
fracture toughners	$Pa \cdot \sqrt{m}$	K_{1C}	
Heat			
temperature (thermodynamic) [Note (1)]	kelvin	K	degree Celsius (°C)
temperature (other than thermodynamic)	degree Celsius	°C	kelvin (K)
lin. expansion coeff.		K^{-1}	$°C^{-1}$
quantity of heat	joule	J	
heat flow rate	watt	W	
thermal conductivity		(W/m•K)	(W/m•°C)
thermal diffusivity		m^2/s	
specific heat capacity		J/(kg•K)	J/(kg•°C)
Electricity and Magnetism			
electric current	ampere	A	
electric potential	volt	V	
current density		A/m^2	
electrical energy	watt	W	
magnetization current	ampere/meter	A/m	
Light			
illumination	lux	lx	
wave length	angstrom	Å	

NOTE:
(1) Preferred use for temperature and temperature interval is degree Celsius (°C), except for thermodynamic and cryogenic work where kelvins may be more suitable. For temperature interval, 1K = 1°C exactly.

Copyright ASME International
Provided by IHS under license with ASME
No reproduction or networking permitted without license from IHS

TABLE IB COMMONLY USED CONVERSION FACTORS [NOTE (1)]

Quantity	Conversion		Multiplication Factor [Notes (2) & (3)]
	From	To	
Plane angle	degree	rd	1.745 329 E – 02
Length	in.	m	2.54* E – 02
	ft	m	3.048* E – 01
	yd	m	9.144* E – 01
Area	$in.^2$	m^2	6.451 6* E – 04
	ft^2	m^2	9.290 34* E – 02
	yd^2	m^2	8.361 274 E – 01
Volume	$in.^3$	m^3	1.638 706 E – 05
	ft^3	m^3	2.831 685 E – 02
	US gallon	m^3	3.785 412 E – 05
	Imperial gallon	m^3	4.546 090 E – 03
	liter	m^3	1.0* E – 03
Mass	lb (avoir.)	kg	4.535 924 E – 01
	ton (metric)	kg	1.000 00* E + 03
	ton (short 2000 lbm)	kg	9.071 847 E + 02
Force	kgf	N	9.806 65* E + 00
	lbf	N	4.448 222 E + 00
Bending, torque	kgf-m	N•m	9.806 65* E + 00
	lbf-in.	N•m	1.129 848 E – 01
	lbf-ft	N•m	1.355 818 E + 00
Pressure, stress	kgf/m^2	Pa	9.806 65* E + 00
	lbf/ft^2	Pa	4.788 026 E – 01
	$lbf/in.^2$ (psi)	Pa	6.894 757 E + 03
	$kips/in.^2$	Pa	6.894 757 E + 06
	bar	Pa	1.0* E – 05
	inch of water (60°F)	Pa	2.4884 E + 02
Energy, work	Btu (IT) [Note (4)]	J	1.055 056 E + 03
	ft-lbf	J	1.355 818 E + 00
Power	hp (550 ft-lbf/s)	W	7.456 999 E + 02
Temperature	°C	K	$t_K = t_C + 273.15$
	°F	K	$t_K = (t_F + 459.67)/1.8$
	°F	°C	$t_C = (t_F - 32)/1.8$
Temperature interval	°C	K	1.0* E + 00
	°F	K or °C	5.555 556 E – 01
Viscosity, dynamic	$lbf\text{-}sec/ft^2$	Pa•s	4.788 026 E + 01
	lbm/ft-sec	Pa•s	1.488 164 E + 00

GENERAL NOTE: The factors are written as a number greater than 1 and less than 10 with six decimal places. The number is followed by the letter "E" (for exponent), a plus or minus symbol, and two digits which indicate the power of 10 by which the number must be multiplied to obtain the correct value. For example,

$$3.523\ 907\ E - 02 \text{ is } 3.523\ 907 \times 10^{-2} \text{ or } .035\ 239\ 07$$

NOTES:
(1) A more extensive list of conversion factors between SI (Metric) Units and U.S. Customary are given in ASME SI-1, ASME Orientation and Guide for Use of SI (Metric) Units, and ASTM E 380, Metric Practice Guide.
(2) Relationships that are exact in terms of the base units are followed by a single asterisk.
(3) Precaution should be taken when making conversions for metric units that constants are adjusted to their metric values.
(4) International table.

Copyright ASME International
Provided by IHS under license with ASME
No reproduction or networking permitted without license from IHS

APPENDIX II
EXAMPLES OF DETERMINING FLOW RATE UNCERTAINTIES

II-1 PURPOSE

The purpose of this Appendix is to present an example of the various methods used to establish meaningful estimates for the limits of uncertainty of the final flow measurement specified in Section 1, para.1.3. The terms and methods described in ASME PTC 19.1-1985 are used in this example to establish the estimate of measurement uncertainty. The techniques and procedures specified in ASME PTC 25 and PTC 19.5-1971, Fluid Meters, Part 2 are used in this example for determination of valve flow rates.

II-2 EXAMPLE DETERMINATION

Meter Type:	ASME concentric thin-plate square-edged orifice with flange taps.
Purpose:	Establish estimate for limits of uncertainty for flow test results.
Medium:	Water
Assumption:	The coefficient for the meter has not been calibrated against a standard.

The following is a typical set of test data:

Diameter of meter:	$D = 3.117$ in
Diameter of orifice plate:	$d_o = 0.935$ in.
Pressure drop across meter:	$\Delta P = 387.8$ in. water
Temperature:	$T = 77°F$

$$\text{Beta Ratio } (\beta) = \frac{d_o}{D} = 0.300$$

Define the functional relationship:
Equation 1:

$$m = \frac{358.93\ C\ d_o^2\ F_a \sqrt{\rho\ (\Delta P)}}{\sqrt{1 - \left(\frac{d_o}{D}\right)^4}}$$

where

m = mass flow rate, lbm/hr
C = discharge coefficient, dimensionless
d_o = diameter of orifice plate, in.
D = diameter of meter, in.
F_a = thermal expansion number, dimensionless
ρ = water density, lbm per cu ft
ΔP = differential pressure head across meter, in. water

List elemental error sources and list estimated bias and precision errors for each. (See Table II-1.)

Parameter *C* — Discharge Coefficient

Per the "Fundamentals of Temperature, Pressure, and Flow Measurement," the discharge coefficient for orifice plate meters is characterized by bias error of ±0.55% for 2 in. and greater pipes with Reynolds numbers exceeding 5000 × D where D is in units of inches.

Also, the "Flowmeter Computation Handbook" recommends that a 0.5% margin be added to all other identified bias errors to account for installation variations.

The total relative bias error for C is determined as follows:

$$B_{C\%} = (0.5\%) + (0.55\%) = 1.05\%$$

The coefficient of discharge is calculated based on the equations listed in ASME PTC 19.5.

The calculated value for C is 0.599.

The absolute value for the bias limit is:

$$B_C = (0.0105)\,(0.599) = 0.00627 \approx 0.007$$

The absolute precision error for the coefficient of discharge is zero.

Parameter d_o — Diameter of Orifice Plate

The estimated bias error for the orifice plate diameter is ±0.001 in. This absolute bias error estimate accounts for the inaccuracies in the measurement device and the potential personnel error in reading the measurement device.

The absolute precision error for the orifice plate diameter is zero.

Copyright ASME International
Provided by IHS under license with ASME
No reproduction or networking permitted without license from IHS

TABLE II-1
TABLE OF UNCERTAINTY PARAMETERS

Parameter	Absolute Bias Error B	Absolute Precision Error S	Nominal Value (Based on Test Data)	Relative Bias Error B_R	Relative Precision Error S_R	Relative Sensitivity Coefficient θ^1
C	± 0.007	0	0.599	$\frac{0.007}{0.599} = \pm 0.0117$	0	1
d_o	±0.001 in.	0	0.935 in.	$\frac{0.001}{0.935} = \pm 0.00107$	0	$\frac{2}{1-\beta^4} = 2.0163$
D	±0.003 in	0	3.117 in.	$\frac{0.003}{3.117} = \pm 0.0096$	0	$\frac{2\beta^4}{1-\beta^4} = 0.0163$
F_a	0	0	1.00007	0	0	1
ρ	±0.04 lbm/ft^3	±0.02 lbm/ft^3	62.25 lbm/ft^3	$\frac{0.04}{62.25} = \pm 0.0064$	$\frac{0.02}{62.25} = \pm 0.00032$	0.5
ΔP	11 in. water	5 in. water	387.8 in. water	$\frac{11}{387.8} = \pm 0.02836$	$\frac{5}{387.8} = \pm 0.01290$	0.5

Parameter D — Diameter of Meter

The estimated bias error for the meter diameter is ±0.003 in. This estimate in absolute bias error accounts for both measurement device and personnel inaccuracies.

The absolute precision error for the meter diameter is zero.

Parameter F_a — Thermal Expansion Number

$$F_a = \int (T)$$

where

T = water temperature, °F

F_a is determined from Fig. 11-1-3 on page 156 of ASME PTC 19.5. The curve in Fig. 11-1-3 of ASME PTC 19.5 can be approximated by the following equation:

$$F_a = 1.7143 \times 10^{-5} T + 0.99875$$

$$B_{F_a} = \frac{\partial F_a}{\partial T} B_T$$

$$\frac{\partial F_a}{\partial T} = \frac{dF_a}{dT} = 1.7143 \times 10^{-5}$$

where

B_T = assumed to be ±5°F

$B_{Fa} = (1.7143 \times 10^{-5})\ (5) = \pm 0.00009$

F_a based on a nominal temperature of 77°F is:

$F_a = (1.7143 \times 10^{-5})(77) + 0.99875$

$F_a = 1.00007$ at 77°F

The relative variation in F_a for a 5°F error in water temperature would equate to:

$$\%\ \text{error}\ F_a = \frac{0.00009}{1.00007} = 0.01\%$$

Therefore, the absolute bias error is considered zero.

The absolute precision error for the thermal expansion number, F_a, is zero.

Parameter ρ — Density of Water

$$\rho = \int (T\ P)$$

where

T = water temperature, °F

P = pressure, psia

ρ is determined from Table 3 of the ASME Steam Tables, 1967.

The variation in ρ due to pressure is negligible and is not considered.

The variation in ρ due to a ±5% error in water temperature would equate to

$$B_\rho = \pm 0.03875$$

The absolute bias error for ρ is taken as ±0.04 lb/ft^3

The absolute precision error, $S\rho$, for water density is estimated from past experience to be ±0.02 lbm/ft^3.

Copyright ASME International
Provided by IHS under license with ASME
No reproduction or networking permitted without license from IHS

Parameter ΔP — Differential Pressure Head Across Meter, in. Water

ΔP is measured on a strip chart recorder which is calibrated using a transfer gage with a range of 0 – 1000 in. water. The transfer gage is in turn calibrated using a deadweight tester.

The bias error limit for the strip chart recorder is based on one-half the smallest subdivision which is ±10 in. water.

The accepted tolerance for the transfer gage is ±0.25% of full scale which equates to an absolute bias error of ±2.5 in. water.

The calibrator (deadweight tester) for the transfer gage is two times as accurate as the transfer gage and the bias error induced is ±0.3 in. water. Refer to pgs. 54–55 of "Fundamentals of Measurement Error."

The RSS technique for combining the bias errors yields:

$$B_{\Delta P} = \left[(10)^2 + (2.5)^2 + (0.3)^2 \right]^{1/2}$$

where

absolute bias error $B\Delta_P$ = 10.3 in. water

round up $B\Delta_P$ = 11.0 in. water

The absolute precision error $S\Delta_P$ for the meter differential pressure is estimated based on previous experience to be ±5 in. water.

All the absolute and relative bias and precision errors are tabulated in the following equations. Also tabulated for each parameter are the relative sensitivity coefficients, θ', which were determined in accordance with ASME PTC 19.1-1985.

The individual parameter errors are propagated separately for bias and precision into the result according to a Taylor series expansion.

The relative bias error for the flow rate is:

Equation 2:

$$\frac{B_m}{m} = \left[\left(1 \times \frac{B_C}{C} \right)^2 + \left(\frac{2}{1-\beta^4} \times \frac{B_{d_o}}{d_o} \right)^2 + \left(\frac{2\beta^4}{1-\beta^4} \times \frac{B_D}{D} \right)^2 + \left(1 \times \frac{B_{F_a}}{F_a} \right)^2 + \left(0.5 \times \frac{B_\rho}{\rho} \right)^2 + \left(0.5 \times \frac{B_{\Delta P}}{\Delta P} \right)^2 \right]^{1/2}$$

The relative precision error for the flow rate is:

Equation 3:

$$\frac{S_m}{m} = \left[\left(1 \times \frac{S_C}{C} \right)^2 + \left(\frac{2}{1-\beta^4} \times \frac{S_{d_o}}{d_o} \right)^2 + \left(\frac{2\beta_4}{1-\beta^4} \times \frac{S_D}{D} \right)^2 + \left(1 \times \frac{S_{F_a}}{F_a} \right)^2 + \left(0.5 \times \frac{S_\rho}{\rho} \right)^2 + \left(0.5 \times \frac{S\Delta P_2}{\Delta P} \right) \right]^{1/2}$$

Substituting the appropriate values into Eqs. 2 and 3:

Equation 4:

$$\frac{B_m}{m} = \left[(0.0117)^2 + (2.016 \times 0.00107)^2 + (0.0163 \times 0.00096)^2 + (0) + (0.5 \times 0.0064)^2 + (0.5 \times 0.02836)^2 \right]^{1/2}$$

$$\frac{B_m}{m} = \left[(0.0001370 + 0.0000046 + 2.45 \times 10^{-10} + 0 + 0.0000102 + 0.0002011) \right]^{1/2}$$

$$\frac{B_m}{m} = \pm 0.0188$$

Equation 5:

$$\frac{S_m}{m} = \pm \left[(0) + (0) + (0) + (0) + (0.5 \times 0.00032)^2 + (0.5 \times 0.01290)^2 \right]^{1/2}$$

$$\frac{S_m}{m} = \pm \left[(2.5 \times 10^{-8} + 0.0000416)^{1/2} \right.$$

$$\frac{S_m}{m} = \pm 0.0065$$

Examination of the individual factors for each parameter in Eqs. 4 and 5 clearly indicate which parameters contribute most to the bias and precision error limits of the result. In this example, the largest contributors to the bias error limit is the differential pressure, ΔP and the discharge coefficient, C. The largest contributor to the precision error limit is the differential pressure measurement, ΔP.

Since all the estimates for precision errors of the independent parameters are based on experience the degrees of freedom can be assumed to be greater

Copyright ASME International
Provided by IHS under license with ASME
No reproduction or networking permitted without license from IHS

than 30, so that the t value can be taken as 2 ∴ relative precision error limit is (2) (0.0065) = ±0.013.

The total uncertainty in the flow rate can be obtained by combining the bias and precision errors as follows:

Equation 6:

$$\frac{U_{RSS}}{m} = \left[\left(\frac{B_m}{m}\right)^2 + \left(2 \times \frac{S_m}{m}\right)^2\right]^{1/2} = \left[(0.0188) + (2 \times 0.0065)^2\right]^{1/2} = \pm 2.28\% \text{ at ~95\% coverage}$$

Note that the requirement of ASME PTC 25–2001 for m ±2% has not been achieved.

The largest contributor to uncertainty is the differential pressure, ΔP. The first step is to eliminate the transfer gage for calibration of the strip chart recorder. The strip chart recorder will be calibrated directly using a dead weight tester.

The bias error limit for the deadweight tester is ±0.1% of full scale. The full scale range for the deadweight tester is 0 to 500 in. of water. The absolute bias error limit is 0.001 × 500 = 0.5 in. water.

In addition, the calibration range for ΔP is changed to reduce the smallest subdivision on the strip chart recorder from 20 in. of water to 10 in. of water. The bias error limit is based on one-half the smallest subdivision which results in a reduction of the bias error limit from 10 to 5 in. of water.

The RSS technique for combining bias errors is used to recalculate the absolute bias error for ΔP.

$$B_{\Delta P} = \left[(5)^2 + (0.5)^2\right]^{1/2} = 5.02 \text{ in. water}$$

Round up to 6 in. water.

The revised relative bias error is

$$(B_{\Delta P})_R = \frac{6}{387.8} = 0.01547$$

The revised value for $\frac{B_m}{m}$ is:

$$\frac{B_m}{m} = 0.0145$$

Combining bias and precision errors yields

$$\frac{U_{RSS}}{m} = 1.959 \text{ at ~95\% coverage}$$

The mass flow rate m based on the nominal values noted herein is 29,300 lbm/hr.

The following test was conducted to verify the estimate for the precision error index.

All instruments were calibrated in accordance with the tolerance limits stated herein.

A steady state flow test was conducted with the 0.935 in. diameter orifice plate. The temperature was a constant 77°F for the entire test. During the test, ten separate sets of data were taken to establish the precision error limit of uncertainty. The results of the test are as follows:

Data Set	***m***
1	29,410
2	29,280
3	29,170
4	29,320
5	29,190
6	29,450
7	29,305
8	29,260
9	29,380
10	29,350

$\bar{x}$, average value m for sample is:

$$\bar{x} = \frac{1}{N}\sum_{k=1}^{N} X_k = \frac{1}{10}(293{,}115) = 29{,}311 \text{ lbm/hr.}$$

The sample standard deviation is:

$$S = \left[\frac{\sum_{k=1}^{N}(X_k - \bar{x})^2}{N-1}\right]^{1/2} = 90.4 \text{ lbm/hr.}$$

Degrees of freedom $N - 1 = 10 - 1 = 9$

The t value for the 95 percentile point for a two-tailed student t distribution with 9 deg of freedom is 2.262.

Relative precision error limit is calculated as follows:

$$\pm \frac{90.4}{29{,}311}(2.262) = \pm 0.0069$$

Copyright ASME International
Provided by IHS under license with ASME
No reproduction or networking permitted without license from IHS

This value is roughly half the original estimated. Combining the new precision error limit obtained by test with the bias error estimate yields.

$$\frac{U_{RSS}}{m} = \pm\left[(0.0145)^2 + (0.0069)^2\right]^{1/2} = \pm 0.016$$
$$= \pm 1.6\% \text{ at } \sim 95\% \text{ coverage}$$

Note that the test objective of ±2% has been achieved, however, the uncertainty error limits can be further reduced by conducting calibration tests to better define the meter coefficient of discharge. Refer to pg. 39 of ASME PTC 19.1 for additional information.

Report:

The report summary is as follows:

$\frac{B_m}{m}$ = −0.0145, bias error

$\frac{S_m}{m}$ = ±0.0069, uncertainty of mass flow rate

$\frac{U_{RSS}}{m}$ = 1.6% at ~95% coverage, precision (process) error

REFERENCES

ASME PTC 19.1-1985, Instruments and Apparatus, Part 1, Measurement Uncertainty

ASME PTC 19.5-1971, Fluid Meters, Part 1

ASME Flowmeter Computation Handbook, Report of ASME Research Committee on Fluid Meters

Publisher: The American Society of Mechanical Engineers (ASME), Three Park Avenue, New York, NY, 10016-5990

Benedict, R. P. *Fundamentals of Temperature, Pressure, and Flow Measurement,* 2nd ed. Ch. 10, 24. New York: John Wiley & Sons, 1977.

Taylor, James L. *Fundamentals of Measurement Error,* 1st ed. Monrovia, CA: NEFF Instrument Corporation, 1988.

Copyright ASME International
Provided by IHS under license with ASME
No reproduction or networking permitted without license from IHS

APPENDIX A
REFERENCES

ASME PTC 1, General Instructions
ASME PTC 2, Code on Definitions and Values
ASME PTC 19.1, Measurement Uncertainty
ASME PTC 19.2, Pressure Measurement
ASME PTC 19.3, Temperature Measurement
ASME PTC 19.5, Measurement of Quantity of Materials
ASME PTC 19.5.1, Weighing Scales
ASME PTC 19.11, Quality and Purity of Steam
ASME PTC 19.14, Linear Measurements
ASME Fluid Meters, Sixth Edition, 1971
ASME Steam Tables, Sixth Edition
ASME SI-1, Orientation and Guide for Use of SI (Metric) Units

Publisher: The American Society of Mechanical Engineers, Three Park Avenue, New York, NY 10016-5990

D 1070 Tests for Specific Gravity of Gaseous Fuels
D 1298 Test for Density, Specific Gravity, or API Gravity of Crude Petroleum and Liquid Petroleum Products by Hydrometer Method

Publisher: American Society for Testing and Materials, 100 Barr Harbor Drive, West Conshohocken, PA 19428

Colebrook. "Perry's Chemical Engineer's Handbook," Sixth Ed. New York: McGraw-Hill Book Co. (1984).

Green, P. W. (Ed.) "Perry's Chemical Engineer's Handbook," Sixth Ed. New York: McGraw-Hill Book Co. (1984).

Lapple, C. E. "Isothermal and Adiabatic Flow of Compressible Fluids," Trans. AIChE, 39, pp. 385–432 (1943).

Levenspiel, O. "The Discharge of Gases from a Reservoir Through a Pipe," AIChE Journal 23(3), pp. 402–403 (May 1977).

Copyright ASME International
Provided by IHS under license with ASME
No reproduction or networking permitted without license from IHS