ASME PTC*19.7 80 ■ 0759670 0052722 8 ■

AN AMERICAN NATIONAL STANDARD

ANSI/ASME
PTC 19.7 - 1980

PART 7
Measurement of Shaft Power

INSTRUMENTS AND APPARATUS

Supplement to
ASME
PERFORMANCE TEST CODES

THE AMERICAN SOCIETY OF MECHANICAL ENGINEERS
United Engineering Center
345 East 47th Street New York, N.Y. 10017

Copyright ASME International
Provided by IHS under license with ASME
No reproduction or networking permitted without license from IHS
Not for Resale

PART 7

Measurement of Shaft Power

ANSI/ASME PTC 19.7-1980

INSTRUMENTS AND APPARATUS

THE AMERICAN SOCIETY OF MECHANICAL ENGINEERS
United Engineering Center
345 East 47th Street New York, N.Y. 10017

Copyright ASME International
Provided by IHS under license with ASME
No reproduction or networking permitted without license from IHS
Not for Resale

No part of this document may be reproduced in any form,
in an electronic retrieval system or otherwise,
without the prior written permission of the publisher

Date of Issuance: August 31, 1980

Copyright © 1980
THE AMERICAN SOCIETY OF MECHANICAL ENGINEERS
All Rights Reserved
Printed in U.S.A.

Copyright ASME International
Provided by IHS under license with ASME
No reproduction or networking permitted without license from IHS

Not for Resale

FOREWORD

The Performance Test Codes Supervisory Committee in December 1974 activated a Committee to revise PTC 19.7 (1961) on Measurement of Shaft Power. This Instruments and Apparatus Technical Committee has prepared an Instruments and Apparatus Supplement which incorporates the latest technology on the Measurement of Shaft Power.

The Scope of the work of PTC 19.7 on Measurement of Shaft Power is limited to descriptive material which will enable the user to select an appropriate system or procedure for his application. It includes criteria for the operating conditions of the equipment whose power is being measured. The Object of this Supplement is to describe the function, characteristics, advantages, disadvantages and accuracy of equipment and techniques currently available for the measurement of shaft power in rotating machines.

Only the methods of measurement and instruments, including instructions for their use, specified in the individual test codes are mandatory. Other methods of measurement and instruments, that may be treated in the Supplements on Instruments and Apparatus, shall not be used unless agreeable to all the parties to the test.

This Supplement was approved by the Performance Test Codes Supervisory Committee on July 2, 1979. It was approved and adopted by the American National Standards Institute as meeting the criteria for an American National Standard on April 28, 1980.

Copyright ASME International
Provided by IHS under license with ASME
No reproduction or networking permitted without license from IHS
Not for Resale

PERSONNEL OF ASME PERFORMANCE TEST CODES COMMITTEE NO. 19.7 ON INSTRUMENTS AND APPARATUS MEASUREMENT OF SHAFT POWER

Hunt Davis, *Chairman and Secretary*
Robert R. Piepho, *Vice Chairman*

Arthur L. Beaman, Jr., Fellow Design Engineer, Medium Motor and Gearing Division, Westinghouse Electric Corp., P.O. Box 225, Buffalo, New York 14240

Robert Clelland, Senior Principal Engineer, Rotating Equipment Section, Pullman Kellogg Division, Pullman, Inc., Three Greenway Plaza East, Houston, Texas 77046

Hunt Davis, Senior Staff Engineer, Pullman Kellogg Division, Pullman, Inc., Three Greenway Plaza East, Houston, Texas 77046

Ralph Jaeschke, Chief Engineer, Eaton Corp., Industrial Drives Division, 3122 14th Avenue, Kenosha, Wisconsin 53141

Donald R. Jenkins, Associate Professor, Mechanical Engineering Department, Lafayette College, Easton, Pennsylvania 18042

Irving I. Kahn, President, Kahn Industries Inc., 885 Wells Road, Wethersfield, Connecticut 06109

Douglas C. Folkner, Senior Test Engineer, Cameron Test Department, Ingersoll Rand Co., Phillipsburg, New Jersey 08865

Richard A. Mayer, Senior Consultant, Applied Physics Division, Southwest Research Institute, 6220 Culebra Road, San Antonio, Texas 78284

Daniel Nobles, Research Engineer, Worthington Pump International, Harrison, New Jersey 07029

Robert R. Piepho, Product Manager, Fuel Preparation Systems, Fossil Power Generation Division, Babcock & Wilcox Co., 20 South Van Buren Avenue, Barberton, Ohio 44203

David E. Wood, Staff Engineer, Acoustics & Dynamics Measurements/Analysis Group, Union Carbide Corp., P.O. Box 8361, South Charleston, West Virginia 25303

Copyright ASME International
Provided by IHS under license with ASME
No reproduction or networking permitted without license from IHS
Not for Resale

Personnel of the Performance Test Codes Supervisory Committee

J. H. Fernandes, *Chairman*
C. B. Scharp, *Vice-Chairman*

D. W. Anacki
R. P. Benedict
K. C. Cotton
W. A. Crandall
R. C. Dannettel
J. S. Davis
V. F. Estcourt
W. L. Garvin
A. S. Grimes
K. G. Grothues
R. Jorgensen
E. L. Knoedler
W. C. Krutzsch
C. A. Larson
A. Lechner
P. Leung
F. H. Light
S. W. Lovejoy
W. G. McLean
J. W. Murdock
L. C. Neale
R. J. Peyton
W. A. Pollock
J. F. Sebald
J. C. Westcott

Copyright ASME International
Provided by IHS under license with ASME
No reproduction or networking permitted without license from IHS
Not for Resale

CONTENTS

Section 1		
1.01-1.10	Object and Scope	1
	Table 1 — Application Range of Torque and Power Measuring Systems	2
Section 2	**Definitions and Descriptions of Terms**	
2.01-2.04	Torque—Speed—Power Relations	3
2.05-2.15	Statistical Considerations	4
	Table 2 — Summary of Typical Probable Errors for Different Shaft Power Measurement Methods	6
Section 3		
3.01-3.02	Reaction Torque Measurement Systems	7
3.03-3.21	Cradled Dynamometers	7
	Table 3 — Cradled Dynamometer Error Values	10
3.22-3.24	Eddy Current Types	11
3.25-3.32	Waterbrake Types	11
3.33-3.61	Motors and Generators	16
3.62-3.71	Uncradled Dynamometers	20
Section 4		
4.01-4.07	Shaft Torque Measurement Systems	22
4.08-4.15	Surface Strain Systems	23
4.16	Angular Displacement Systems	24
4.17	Mechanical	24
4.18	Electrical	27
4.19	Optical	27
Section 5		
5.01-5.07	Power Measurement Using Electrically Calibrated Motors and Generators	28
	Table 4 — Direct Drive Rotational Speed for Synchronous and Induction Machines, 50 Hz and 60 Hz	29
Section 6		
6.01-6.05	Energy Balance Methods	30
6.06	Open Cycle Systems	32
6.07-6.08	Closed Cycle Systems	33
6.09-6.12	Open Cycle Combustion Gas Turbines	35

Copyright ASME International
Provided by IHS under license with ASME
No reproduction or networking permitted without license from IHS
Not for Resale

Section 7	Appendices	
7.01-7.02	A. Determination of Dynamometer Correction	37
	B. Table 5 – Table of Equivalents	39
	C. Table 6 – Conversion Factors	40
	D. Bibliography	41
	E. Symbols	42

Copyright ASME International
Provided by IHS under license with ASME
No reproduction or networking permitted without license from IHS
Not for Resale

AN AMERICAN NATIONAL STANDARD

ASME Performance Test Codes Supplement on Instruments and Apparatus Part 7

MEASUREMENT OF SHAFT POWER

SECTION 1

OBJECT AND SCOPE

1.01 The object of this Supplement is to describe the function, characteristics, advantages, disadvantages, and accuracy of equipment and techniques currently available for the measurement of shaft power of rotating machines.

1.02 The scope of the Supplement is limited to descriptive material which will enable a user to select an appropriate system or procedure for his application. It includes criteria for the operating conditions of the equipment whose power is being measured, and instructions for the calibration of apparatus.

1.03 Two direct methods of shaft power measurement are described. The reaction torque method utilizes a dynamometer which may supply or absorb shaft power. The other method utilizes a torquemeter which measures torque transmitted between a prime mover and a driven machine.

1.04 When direct means of shaft power measurement are impractical, certain indirect methods may be used. Indirect methods measure the power by electrical means or by thermodynamic analysis.

1.05 For each method presented, this Supplement describes, insofar as appropriate:

Apparatus and required facilities.
Operating principles and characteristics.
Range and limits.
Accuracy.
Calibration methods.
Necessary precautions.
Sources of error.
Advantages and disadvantages.

Table 1 provides guidance on the range of application of the various torque and power measurement systems.

1.06 Some of the procedures and equipment measure shaft torque, and require concurrent determination of rotational speed to provide a value for shaft power.

1.07 There are three general methods available for measurement of rotational speed:

(a) Devices which display, indicate, or record a number of revolutions within a known time interval.
(b) Devices which display, indicate, or record time-averaged rotational speed.
(c) Devices which continuously record instantaneous angular velocity.

Reference 12 (Appendix D) contains a complete description of types, methods, and classification of rotational speed measuring devices.

1.08 The scope does not include operating instructions for specific measurement apparatus.

1.09 It is expected that the main equipment Performance Test Codes will contain instructions concerning the fre-

Copyright ASME International
Provided by IHS under license with ASME
No reproduction or networking permitted without license from IHS
Not for Resale

quency of calibrations, number of observations, limitations on time variations, etc., which are appropriate for the purpose of the equipment tests.

1.10 Specific instructions about the statistical treatment of test data should be found in the main equipment Performance Test Codes.

TABLE 1

Application Range of Torque and Power Measuring Systems

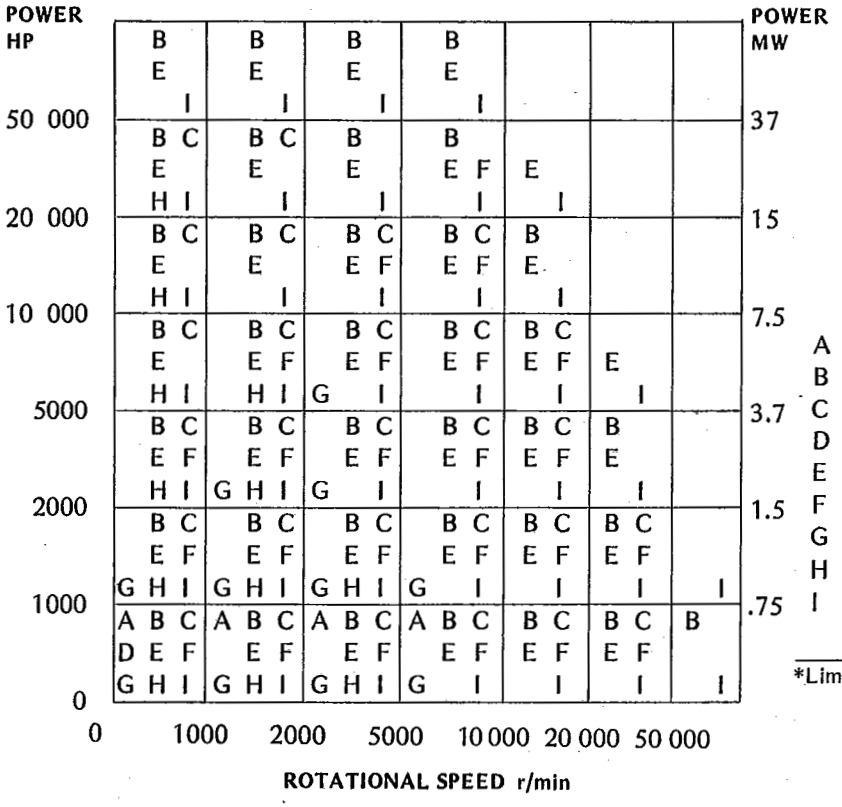

KEY

A AC or DC motor or generator dynamometer
B waterbrake
C eddy current dynamometer
D prony brake
E surface strain gage torquemeter
F angular twist — electrical torquemeter
G angular twist — optical torquemeter
H calibrated motor or generator
I heat balance methods*

*Limited only by driver capability and heat exchanger size.

Copyright ASME International
Provided by IHS under license with ASME
No reproduction or networking permitted without license from IHS
Not for Resale

SECTION 2

DEFINITIONS AND DESCRIPTIONS OF TERMS

TORQUE – SPEED – POWER RELATIONS

2.01 The most common situation for power measurement is one in which the power being transmitted and the angular velocity are both constant with time; that is, there are no transients in either torque or angular velocity within the time interval required to make the measurement.

2.02 The measurement of shaft power of rotating machines in the absence of transients, is accomplished by either direct or indirect methods. The direct methods, utilizing a dynamometer or a torque meter, involve determination of the variables in the following equation:

Physical equation

$$P = \omega T$$

where P = power
ω = angular velocity
T = torque

Power expressed in SI units

$$P = \omega T$$

where P = power, watts (W)
ω = angular velocity, rad/s
T = torque, newton meters (N·m)

Power expressed in English units

$$P = \frac{2\pi n T}{550}$$

where P = power, horsepower (hp)
n = rotational speed, revolutions/sec (r/s)
T = torque (lbf·ft)

2.03 There are cases in which transients in angular velocity and torque occur. Some of the apparatus described herein may, under certain circumstances, be capable of making measurements of instantaneous power, when angular velocity and torque vary with time; or measurements of average power when angular velocity and torque vary cyclically.

2.04 For these cases of non-steady angular velocity and torque the instantaneous value of power is, in physical terms,

$$P = \omega T$$

Torque meter systems with appropriate data recording systems may be used to determine the value of T at any instant. A similar recording of angular velocities, ω, then provides a basis for determination of the instantaneous value of P.

If the values of T and ω vary cyclically the average power may be determined as follows. Let the period of one cycle of torque and speed be the time Δ, and the rotational travel for one cycle be the angle θ, in radians.

Also let φ be defined as $\varphi \equiv \int_0^{\varphi} \omega\, dt$ so that $\theta = \int d\varphi$ for one cycle.

The work done for one cycle then is

$$W = \int_{\varphi}^{\varphi+\theta} T\, d\varphi \qquad (2.04\text{-}1)$$

Time period of one cycle is

$$\Delta = \int_{\varphi}^{\varphi+\theta} \frac{d\varphi}{\omega} \qquad (2.04\text{-}2)$$

The average power for one cycle is

$$p = \frac{W}{\Delta} = \frac{\int_{\varphi}^{\varphi+\theta} T\, d\varphi}{\int_{\varphi}^{\varphi+\theta} \frac{d\varphi}{\omega}} \qquad (2.04\text{-}3)$$

The time-averaged speed is

$$\omega_{avg} = \frac{\theta}{\Delta} = \frac{\theta}{\int_{\varphi}^{\varphi+\theta} \frac{d\varphi}{\omega}} \qquad (2.04\text{-}4)$$

and the displacement-averaged torque is

$$T^*_{avg} = \frac{1}{\theta} \int_{\varphi}^{\varphi+\theta} T\, d\varphi \qquad (2.04\text{-}5)$$

Copyright ASME International
Provided by IHS under license with ASME
No reproduction or networking permitted without license from IHS
Not for Resale

Combining Eqs. (2.04-4) and (2.04-5) with (2.04-3), we obtain

$$p = \omega_{avg} T^*_{avg} \qquad (2.04\text{-}6)$$

Equation (2.04-6) shows that when torque is fluctuating, we must use the displacement-averaged value to get an exact value for average power. Most measuring systems provide time-averaged signals. As long as perturbations in torque or angular velocity are small compared to the means, the assumption that $T^*_{avg} \cong T_{avg}$ is a reasonable approximation.

It should be noted that there is no need for displacement averaging if either the torque or the angular velocity is constant throughout the cycle.

The foregoing analysis is particularly relevant to measurement of shaft power in rotating machinery containing crank mechanisms.

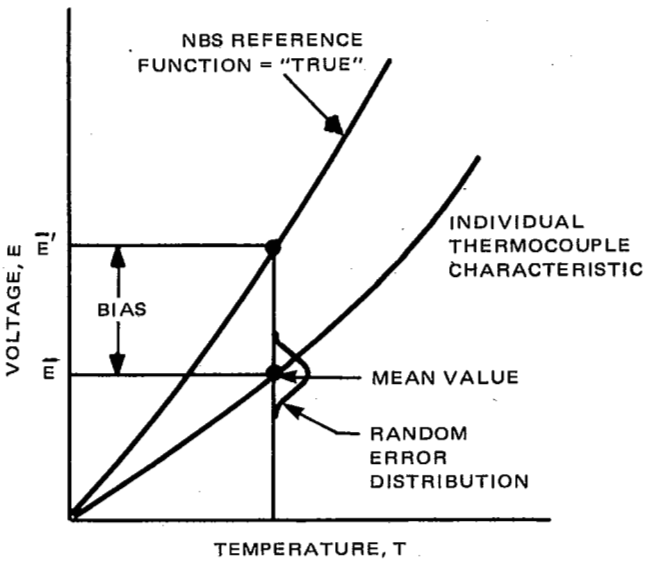

FIG. 1 SYSTEMATIC AND RANDOM ERRORS ILLUSTRATED FOR CASE OF A THERMOCOUPLE CALIBRATION (Ref. 1)

STATISTICAL CONSIDERATIONS

2.05 It is recognized that no measurement is without error; neither the exact value of the quantity being measured, nor the exact error associated with the measurement can be found. The techniques of statistics may be used to provide an estimate of the true value of a quantity, and an estimate of the standard deviation. References 1 and 2, Appendix D, provide the foundations and specific procedures for applying the appropriate statistical methods.

2.06 Each measurement of a single physical quantity X is accompanied by an error e such that

$$\overline{X}' = X \pm e$$

where $\overline{X}'$ is the true value of the single quantity being measured. The error has two components: a random error and a systematic error.

2.07 When repeated measurements are taken, random errors produce the scatter about the average of the results. The term *precision* is used to characterize random errors. Precision is quantified by an estimate of the standard deviation. Systematic errors are those which produce results consistently too high or too low with respect to the true value. Systematic errors are characterized by *bias*, or *accuracy*. Calibration procedures provide quantification of bias. Figures 1 and 2 illustrate the concepts.

2.08 The *confidence interval* statement indicates a range centered on the estimated value, within which the true value is believed to lie. This is accompanied by a probability statement which indicates the assurance that the stated range contains the true value. For example, a complete confidence interval statement is given by

$$\text{power} = 386 \pm 6 \text{ kW; } (95\%)$$

where 386 kW is the estimated value, based on averaging a number of measurements, 6 kW is the confidence interval; and the probability of the true value of power being in the range 380 to 392 kW is 95%. For a given set of observations, as the confidence interval is made larger, the probability becomes greater.

2.09 Measurements of shaft power involve determination of multiple physical quantities. The complexity of the application of the foregoing statistical concepts, and the procedures of References 1 and 2, Appendix D, varies greatly depending on the method and apparatus to be used.

2.10 The contribution of systematic errors is minimized by careful calibration of individual components. The contribution of random errors is minimized by increasing the number of readings of output for fixed values of the controlled operating parameters.

2.11 The term *probable error* refers to the confidence interval around the estimated value for which the probability is 50%.

2.12 In the succeeding parts of this Supplement, numerical values are assigned to the "errors" or "overall errors" of the various systems. Each of these is to be considered as the *probable error of a single determination*, having a 50% probability that the given range includes the real value. These overall errors are usually dominated by random sources because the procedures require calibrations be

Copyright ASME International
Provided by IHS under license with ASME
No reproduction or networking permitted without license from IHS
Not for Resale

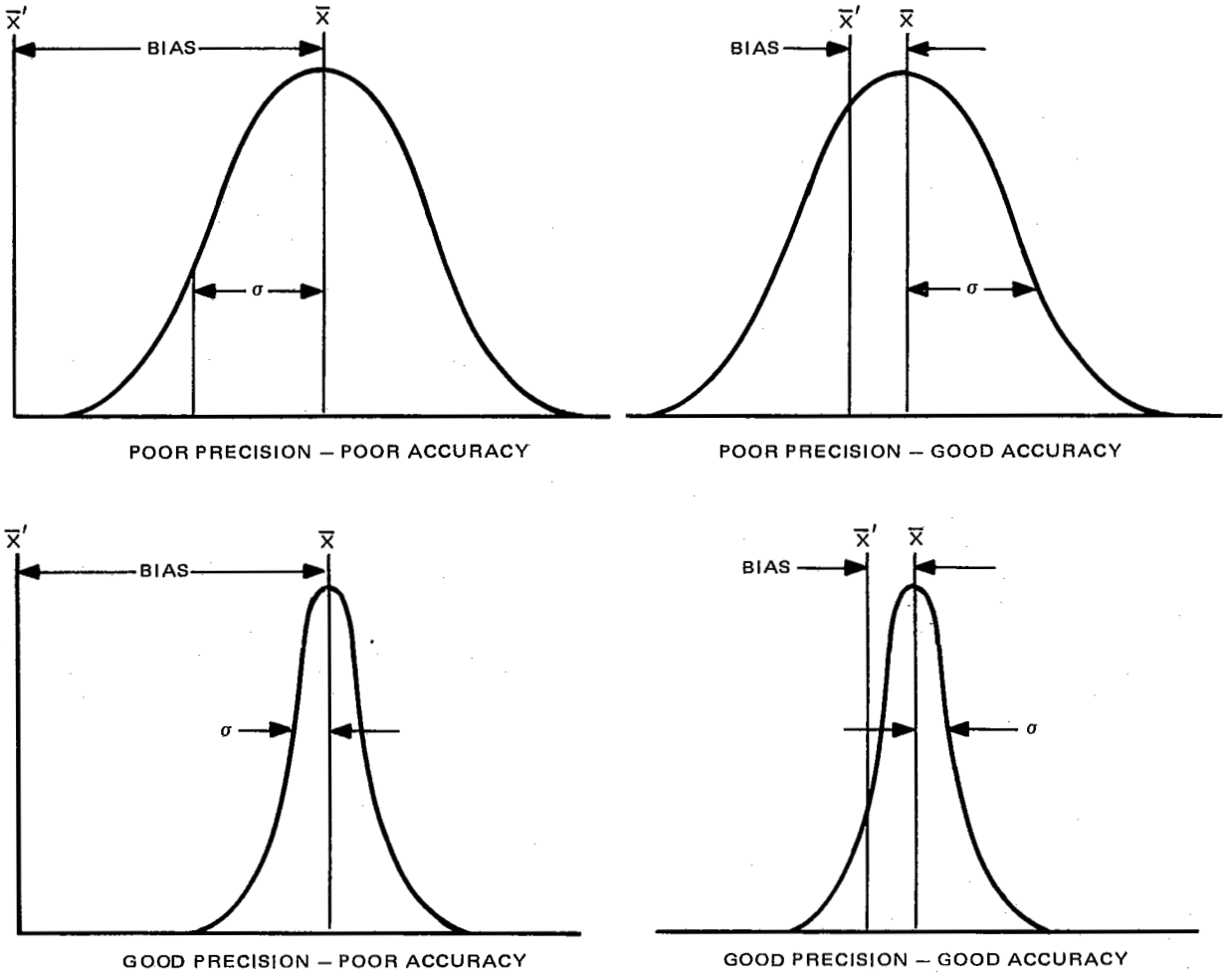

FIG. 2. ACCURACY AND PRECISION (Ref. 1)

performed where appropriate. The nature of the systems which are subject to calibration is such that the confidence interval (50%) of the calibration data is usually considerably smaller than the stated overall error. This fact can be understood when one realizes that calibrations are usually conducted repeatedly and a history of consistency in data is obtained; furthermore the calibrated component often provides only one of numerous inputs required for a determination of shaft power.

2.13 Causes of errors given for the various measurement methods are categorized as predominantly random or systematic, where possible. These listings provide guidance about a) the potential for improvement in results attainable by calibration, and b) by making multiple determinations of the shaft power for each value of the independent operating parameters.

2.14 If an individual instrument has from experience and numerous calibrations a known probable error, signified by CI_i (50%), the confidence interval for higher probabilities may be assumed to be related as follows:

$$\frac{CI_i\,(90\%)}{CI_i\,(50\%)} \simeq \frac{1.645\sigma}{0.674\sigma} = 2.44$$

$$\frac{CI_i(95\%)}{CI_i(50\%)} \simeq \frac{1.960\sigma}{0.674\sigma} = 2.91$$

$$\frac{CI_i\,(99\%)}{CI_i\,(50\%)} \simeq \frac{2.576\sigma}{0.674\sigma} = 3.82$$

These ratios may be useful in relating historical "probable error" descriptions of uncertainty to confidence intervals having high probability. The latter are used in References 1 and 2, Appendix D.

2.15 The application of statistical procedures to determine the confidence interval statements for shaft power measurements is a matter for judgment of the parties concerned with the testing of equipment under one of the

Copyright ASME International
Provided by IHS under license with ASME
No reproduction or networking permitted without license from IHS
Not for Resale

Performance Test Codes. The basis for statistical treatment of data, calibration reference standards, number of data points, probability levels desired and computational procedures should be agreed in advance. Table 2 outlines typical values of probable error for the methods described.

TABLE 2

Summary of Typical Probable Errors for Different Shaft Power Measurement Methods

	Confidence Interval (50%) for a Single Measurement	References, Appendix D, Having Criteria Which Affect Uncertainty of Shaft Power Results
Reaction Torque Systems		
Cradled Dynamometers	± 0.5% to ± 1.0% for torque*	12
Uncradled Dynamometers	± 0.5% to ± 1.0% for torque*	12
Shaft Torque Measurement		
Surface Strain Systems	± 1.0% for torque*	12
Angular Displacement Systems		
Mechanical	Depends on design and application	12
Electrical	± 1.0%*	
Optical	Low intrinsic error, but subject to large error from environmental sources	12
Calibrated Motors & Generators	± 5%	3,4,5,6,12
Energy Balance Methods		
Open Cycle Systems	± 3%	7,8,9
Closed Cycle Systems	± 3%	7,8,9
Combustion Gas Turbines	± 4% to ± 6%	7,8,9,10,11

*Percentage applies to full-scale rating of measuring and/or indicating systems.

Copyright ASME International
Provided by IHS under license with ASME
No reproduction or networking permitted without license from IHS
Not for Resale

SECTION 3

REACTION TORQUE MEASUREMENT SYSTEMS

3.01 Reaction torque systems involve the measurement of the torque exerted by the stationary part of a machine upon its support system. The term *dynamometer* refers to a machine whose stationary support system is designed for accurate measurement of reaction torque.

3.02 The Prony Brake, Fig. 3, embodies the important principles of the dynamometer. It is described here for its historical and educational value. It is rarely used because of its limited speed application, low power absorbing capacity, and awkward control means. Referring to Fig. 3, the prime mover is connected to a wheel around which is a brake block, restrained by a torque arm, which rests on a suitable force measuring device. The friction between the stationary wood cleats attached to the strap and the wheel provides the load on the prime mover. This friction can be changed by adjusting nuts to provide varying loads. Cooling means are provided to remove the heat generated by friction. The power absorbed by the brake is computed from: $P = \omega T$, where $T = FR$ and F is the net force indicated by the force measuring device, and R is the torque arm radius.

CRADLED DYNAMOMETERS

3.03 A cradled dynamometer is a machine whose non-rotating frame is supported in bearings, called trunnion bearings. The frame is restrained from rotation by a force measuring system. See Fig. 4.

3.04 Cradled dynamometers may be either of the absorbing or the driving type. Absorbing dynamometers absorb and measure the power output of a prime mover. Driving or motoring dynamometers provide and measure the power required to drive a machine.

(a) Absorbing Dynamometers
- Eddy-current dynamometer
- Waterbrake
- DC generator
- AC generator

(b) Driving Dynamometers
- DC motor
- AC motor

Table 1 provides an indication of the ranges of application of the various types.

3.05 Trunnions are either anti-friction bearings or hydrostatic bearings. Vibration may cause anti-friction bearings to brinell the bearing races. In order to maintain accurate torque measuring capability, the outer races of anti-friction trunnion bearings should be rotated periodically to provide new contact areas between balls and races. The following methods are used to accomplish this rotation:

(a) Fixed trunnion bearings require removal of the pedestal cap and relieving of the housing weight before the outer bearing race can be turned to a new fixed position.

(b) Manually-rotated trunnion bearings are equipped

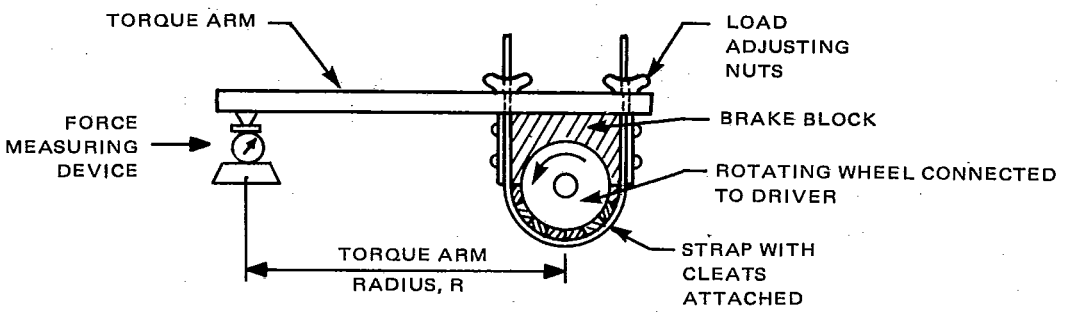

FIG. 3 PRONY BRAKE

Copyright ASME International
Provided by IHS under license with ASME
No reproduction or networking permitted without license from IHS
Not for Resale

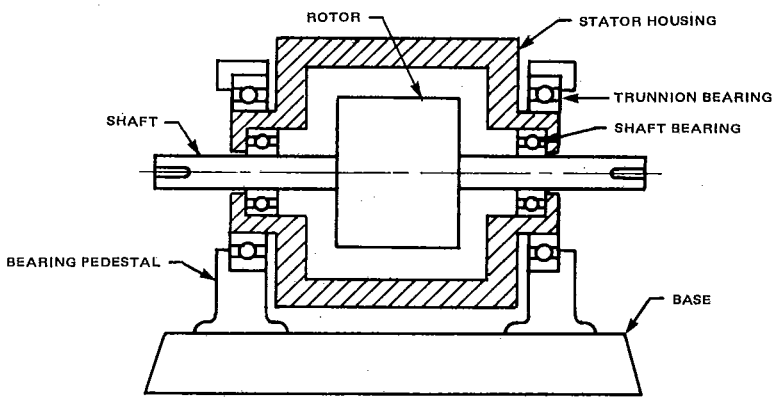

FIG. 4a – CROSS SECTION

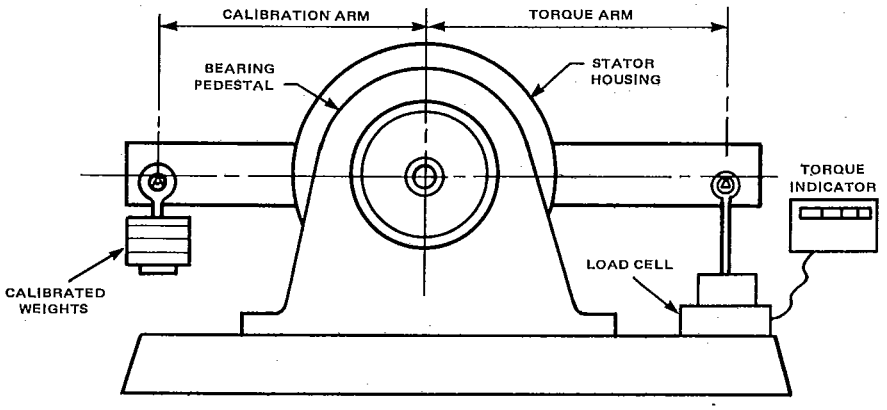

FIG. 4b – DEAD WEIGHT CALIBRATION OF DYNAMOMETER

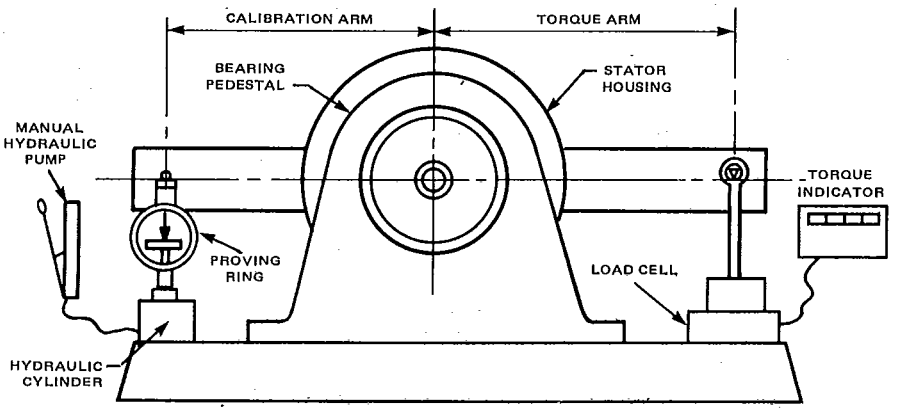

FIG. 4c – PROVING RING CALIBRATION OF DYNAMOMETER FOR HIGH TORQUES

FIG. 4 CRADLED DYNAMOMETER

Copyright ASME International
Provided by IHS under license with ASME
No reproduction or networking permitted without license from IHS
Not for Resale

with a special retainer ring which enables occasional rotation of the outer bearing race without partial disassembly.

(c) Motor-rotated trunnion bearings have outer and inner anti-friction bearings. The inner race of the outer bearing and the outer race of the inner bearing are continuously rotated by a small gearmotor at a low speed, preferably in opposite directions.

Hydrostatic trunnion bearings provide the least friction, permitting the best accuracy. The housing is supported on an oil film without metallic contact. A continuous flow of high pressure oil is required to provide the necessary hydrostatic lift.

3.06 Force is measured with strain gage load cells, hydraulic load cells, pneumatic load cells or mechanical scales. The force measuring device is attached to the torque arm at a known distance from the centerline of the dynamometer.

3.07 Strain gage load cells are available in various configurations. Most models can be used for either load direction in the line of force. Maximum deflection when loaded is approximately 0.01 in. (0.25 mm). Most models are temperature compensated for a temperature range up to 100°F (55°C) above normal ambients. Strain gage load cells are used with analog or digital torque indicators. Error of strain gage force measuring systems is typically ±0.2% of full scale reading if digital indication is used, and ±0.5% of full scale for an analog indicator.

The advantages of the strain gage load cell systems are their compactness, low error, and provision for auxillary instrumentation and controls from the electrical output signal. The disadvantages are the effects from stray vibrations produced by other operating equipment, the limited fatigue life of the gage bondings, and the need for temperature compensation.

3.08 Hydraulic load cells have a piston and cylinder assembly which converts a force into a proportional hydraulic pressure signal. Maximum deflection under load is approximately 0.01 in. (0.25 mm). Some models are available with a temperature compensator and a signal damping device. Hydraulic load cells are used with precision Bourdon tube pressure indicators. The pressure gage may be calibrated in torque units for a particular dynamometer torque arm length. The hydraulic system must be completely filled with fluid and any air must be purged. The overall error of the force measuring system is between ±0.2% to ±0.5% of full scale reading, depending on the load capacity of the system, the mechanical condition of the pressure indicator, and the cylinder and piston assembly. Generally, large systems with high load capacity have lower error.

The advantages of this type are its ruggedness, freedom from temperature effects, and low error. Its disadvantages are its bulkiness, the need to convert pressure to electrical signal for auxiliary control, and the hydrostatic correction needed for difference in elevation between the load cell and the indicator.

3.09 Pneumatic load cells have essentially the same design features, operating characteristics and errors as hydraulic load cells. Bourdon tube pressure gages or mercury manometers are used for force (or torque) indication. A continuous supply of clean, dry, regulated air at about 100 psig (690 kPa gage) is required. The advantages and disadvantages are similar to those of the hydraulic load cells, except that the elevation consideration is negligible.

3.10 Mechanical scales are weighing systems containing levers with knife edge fulcrums or other low friction linkages which attach to the dynamometer housing at a known torque arm distance from the machine centerline. These systems may require displacement when loaded, which should be small in order that the effective torque arm radius is not affected by the displacement.

3.11 Most mechanical scales have a reversing linkage so that the force scale will read in positive direction regardless of the direction of torque. If a dynamometer is so equipped, the housing should be preloaded slightly in the direction in which it will tend to move under running conditions. This prevents the reversing linkage from causing a scale error as it passes through its neutral position. Preloading of horizontal dynamometers should be done by attaching a counterweight from the proper checking torque arm; or by attaching a counterweight to the frame so that the center of gravity of the frame is shifted horizontally, but not vertically. The scales can be reset to zero to compensate for the preload weight. The reversing linkage contains a lever having a 1 to 1 ratio and any error in this ratio will cause the scale calibration in one direction to differ from that in the other direction; hence, the calibration should be checked in both directions. The preload should be reversed whenever the direction of torque is reversed.

3.12 Friction in the scale, linkage or knife edges, or cradle bearings will show up as a difference of scale readings for the same calibrating point dependent upon the direction from which the point is approached. For this reason it is necessary to calibrate the scale by adding weights carefully so as not to overshoot the readings, and then to remove them in the same manner. The difference between the increasing and decreasing curves is an indication of possible error due to friction.

3.13 If the dynamometer weighing system uses a dashpot to damp the torque arm fluctuations, its adjustment

Copyright ASME International
Provided by IHS under license with ASME
No reproduction or networking permitted without license from IHS Not for Resale

should be checked periodically to determine that the dashpot effect is equal on the "in" and "out" stroke. This check should be performed with the weighing system free of influence from the dynamometer. The natural frequency of the dashpot should be at least twice, and preferably five times, the highest rotational speed of the dynamometer.

3.14 The overall error of power measurement by a cradled dynamometer results from several contributing factors:

(a) Trunnion bearing friction.
(b) Force measurement system error.
(c) Torque arm and calibrating arm length error.
(d) Static unbalance of dynamometer housing.
(e) Restriction of free movement caused by water lines, lubrication lines and electrical leads connected to the dynamometer housing.
(f) Static reaction from Bourdon tube effect or misalignment of pressurized connections to dynamometer housing.
(g) Momentum reaction of air, water, or other cooling flow entering and leaving the dynamometer housing.
(h) Errors in measurement of rotational speed.

Typical error quantities are given in Table 3.

3.15 The overall torque measuring error for cradled dynamometer depends on the care taken with respect to minimizing the error sources listed. Normally the resulting overall error is between ±0.5% and ±1.0% of full scale reading. With extremely careful attention to details and procedures, and with well maintained equipment having hydrostatic trunnion bearings, errors from the above sources may be reduced to ±10%.

Mechanical scales will have errors due to rotation of the torque arm under load; but a correction can be computed if the angular displacement is known. Without such correction, a 2.5 deg (0.044 rad) deviation from a perpendicular relation between torque arm and force line of action produces an error of 0.1%. The error varies as the square of the angular displacement.

3.16 The use of an unnecessarily large dynamometer for an application results in larger percentage errors because the intrinsic errors are determined as a percentage of maximum dynamometer torque rating. In some cases, it may be advantageous to substitute a load cell having a smaller range for a particular application in order to improve overall torque measurement accuracy.

TABLE 3

Cradled Dynamometer Error Values

	Typical Confidence Interval, (50%) of a Single Measurement as Percent of Full Scale Reading	
	Random	**Systematic**
(a) Trunnion Bearing Friction		
Fixed trunnions	0.5%	0.05%
Rotatable trunnions	0.3%	0.05%
Hydrostatic trunnions	0.1%	0
(b) Force Measurement System Error		
Strain gage	0.2 to 0.5%	0.1%
Hydraulic or pneumatic load cell	0.2 to 0.5%	0.1%
Mechanical scales	0.1%	0.05%
(c) Torque arm and calibrating arm length error	0	0.02%
(d) Static Unbalance of Dynamometer Housing	0	0 to 0.2%*
(e) Restrictions of Free Movement	0 to 0.5%*	
(f) Static Bourdon and Misalignment Reactions	0 to 0.5%*	
(g) Momentum Reaction	0 to 0.5%*	
(h) Speed Measurement Error	0.02 to 0.5%**	

*Depending on specific arrangement and operating conditions.
**Depending on instrument and indicator types.
The numerical values given represent probable error, minimized by careful calibration and data acquisition procedures, with apparatus and instruments in good working order.

Copyright ASME International
Provided by IHS under license with ASME
No reproduction or networking permitted without license from IHS
Not for Resale

3.17 The force measuring system should be in its final configuration when its calibration is checked. The procedure should be performed under static conditions. The dynamometer shaft must not be connected to another machine. Calibration or checking arms for attachment of dead weights should be provided by the dynamometer manufacturer. The weights are hung from the calibration arm at a fixed distance from the centerline of the dynamometer. Calibration readings should be taken upscale (adding weights) and downscale (removing weights) at a sufficient number of equally spaced points within the range of expected operation. The force measuring device should be checked for zero reading with the dynamometer in neutral position before and after the calibration procedure. The results obtained should be within the rated accuracy of the system.

3.18 For high torque dynamometers, a dead weight calibration may be impractical because of physical size limitations (weights, length of calibration arm, etc.). In such cases, a double acting hydraulic cylinder with a proving ring or other force indicator should be attached to the calibration arm. The proving ring or other force indicator should have been calibrated with precision weights having documentation relatable to weight standards of the U.S. National Bureau of Standards. Refer to Fig. 4c.

3.19 The cradled dynamometers described in this Supplement are presumed to have trunnion bearing systems, a torque arm, a force measuring system and, in most cases, a rotational speed measurement system.

3.20 Dynamometers are generally fixed installations in a testing laboratory or a machinery manufacturer's testing facility. They are rarely suitable for power measurement at an operating installation.

3.21 The accuracy of all cradled dynamometer types depends on the common sources of error given in Par. 3.14, and the capability of the force measuring system as described in Pars. 3.06 to 3.13. Before and after each test run, the zero scale reading should be recorded and the average reading used to compute the test results. A significant change in zero reading invalidates the results.

Eddy Current Types

3.22 An eddy current dynamometer has a toothed rotor and a stator frame which contains a direct current field coil. Shaft power input is dissipated as eddy current losses in the stator, and the resulting heat is carried away by forced circulation of water. (Figs. 5a, 5b.) Precise control of load torque may be provided with electronic systems. High rotational speeds may be accommodated. Typical speed-torque curves are shown in Fig. 6.

3.23 A variation of the dynamometer described in Par. 3.22 includes a motor, and it may function either as an absorber or as a driver. (Fig. 7.) This is called an eddy current universal dynamometer. The absorbing rotor and field coil correspond to those of Fig. 5a. An induction motor and an eddy current coupling are provided for the driver mode. When operating as an absorber, the absorbing field coil is energized and the eddy current coupling is not energized. When operating in the driver mode, the eddy current coupling is energized and the absorber field unit is not. The rotational speed in the driver mode is limited to that of the induction motor, but the absorber section can operate over a range of rotational speeds.

3.24 Water is required for cooling the stator of the absorber section. See Par. 3.32 for a description of cooling water systems. An electric power source is required.

Waterbrake Types

3.25 A waterbrake is a dynamometer which uses momentum exchange or turbulence between rotor and stator to provide the load torque. The working fluid, usually water, is circulated through the machine removing the heat equivalent of the absorbed power. Several design variations are commonly used.

Typical speed-torque curves are shown in Fig. 6.

3.26 Viscous shear type waterbrakes (Fig. 8a) contain one or more smooth tapered discs rotating between stators with smooth inside walls. Power is absorbed through turbulent friction created in the boundary layers adjacent to rotor and stator surfaces. Viscous shear brakes are used primarily for high speed applications because of smaller susceptibility to cavitation damage at high tip speeds. Power absorption for a given rotor diameter is low compared to other types of waterbrakes. This leads to relatively large overall unit sizes. Consequently applications larger than 500 hp (370 kW) capacity are restricted to permanent installations because of the large sizes involved. Viscous shear waterbrakes are capable of operation in either rotational direction.

3.27 Agitator type waterbrakes (Fig. 8b, 8c) are equipped with vaned or perforated rotors and stators. Power is absorbed through vortices created between the vanes or in the rotor and stator holes. Agitator type waterbrakes are used for medium and high speed applications. Tip speeds are limited to control cavitation damage. Power absorption for a given rotor diameter is high, permitting small and lightweight design. Flange mounted units for temporary installations are available up to 5000 hp (3730 kW)

Copyright ASME International
Provided by IHS under license with ASME
No reproduction or networking permitted without license from IHS Not for Resale

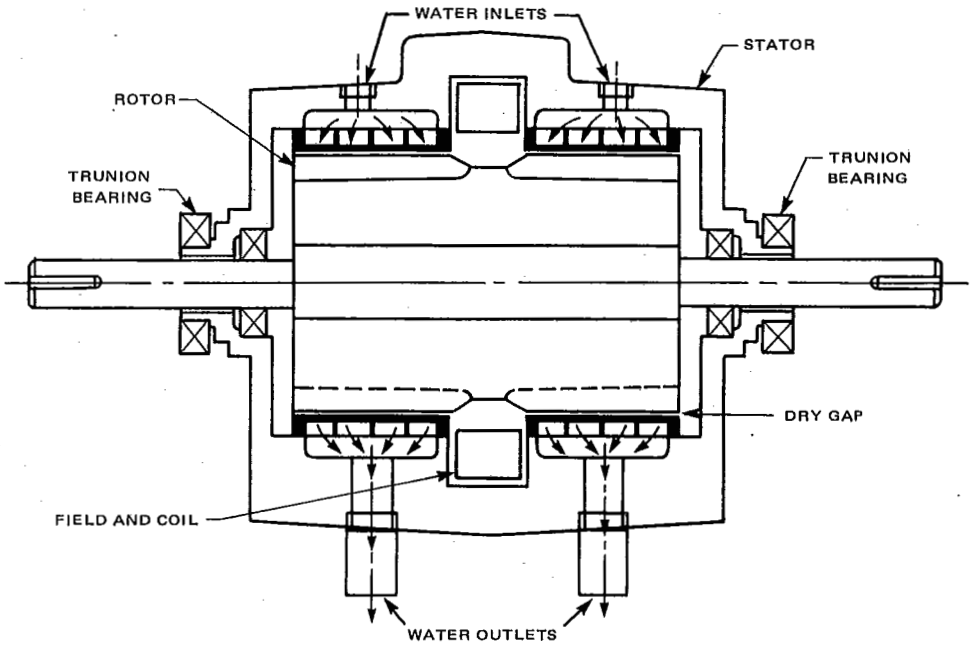

FIG 5a EDDY CURRENT ABSORPTION DYNAMOMETER (DRY GAP TYPE)

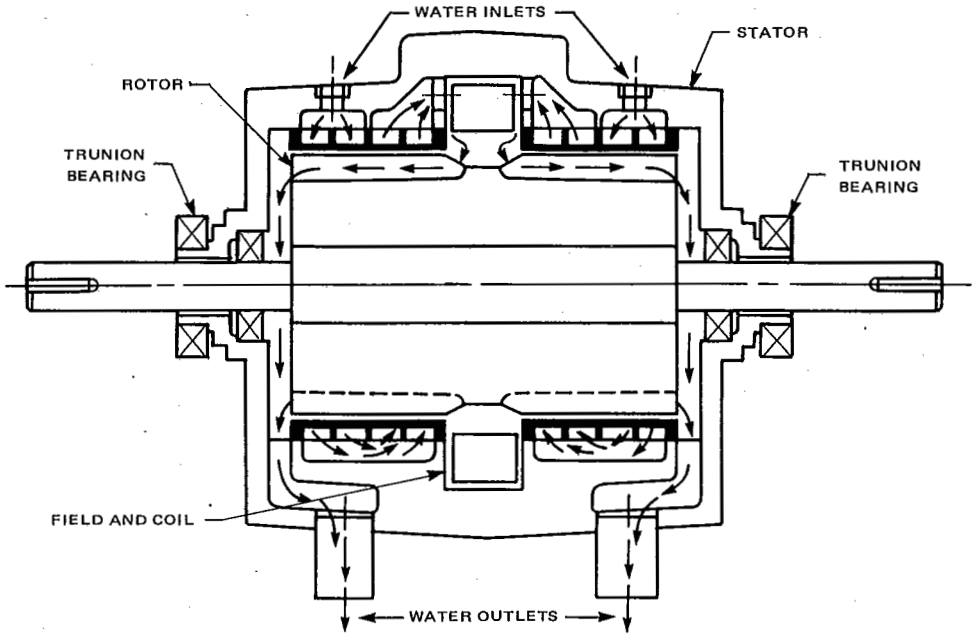

FIG. 5b EDDY CURRENT ABSORPTION DYNAMOMETER (WATER IN GAP TYPE)

Copyright ASME International
Provided by IHS under license with ASME
No reproduction or networking permitted without license from IHS
Not for Resale

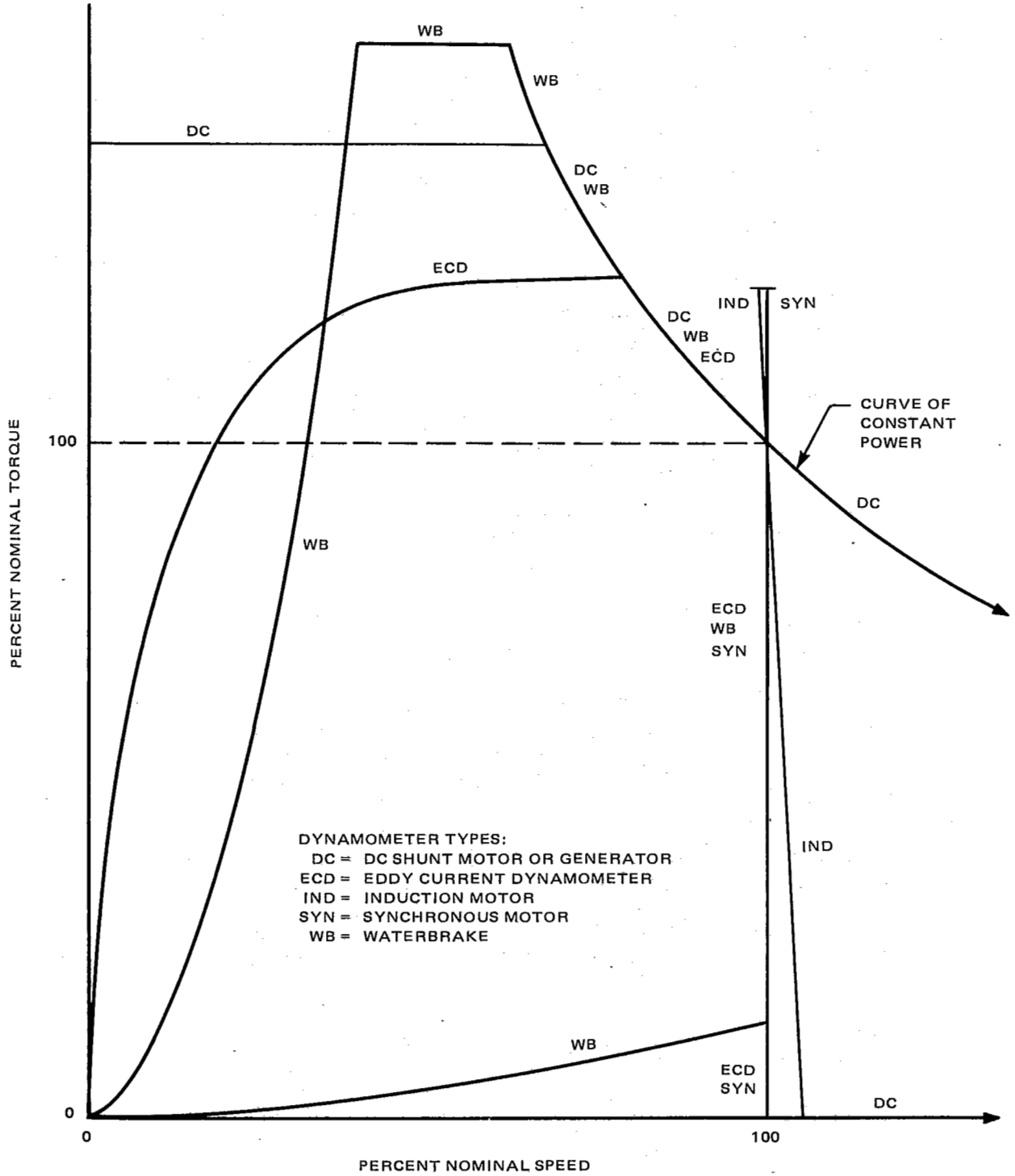

FIG. 6 TYPICAL SPEED – TORQUE ENVELOPES FOR DYNAMOMETERS

Copyright ASME International
Provided by IHS under license with ASME
No reproduction or networking permitted without license from IHS
Not for Resale

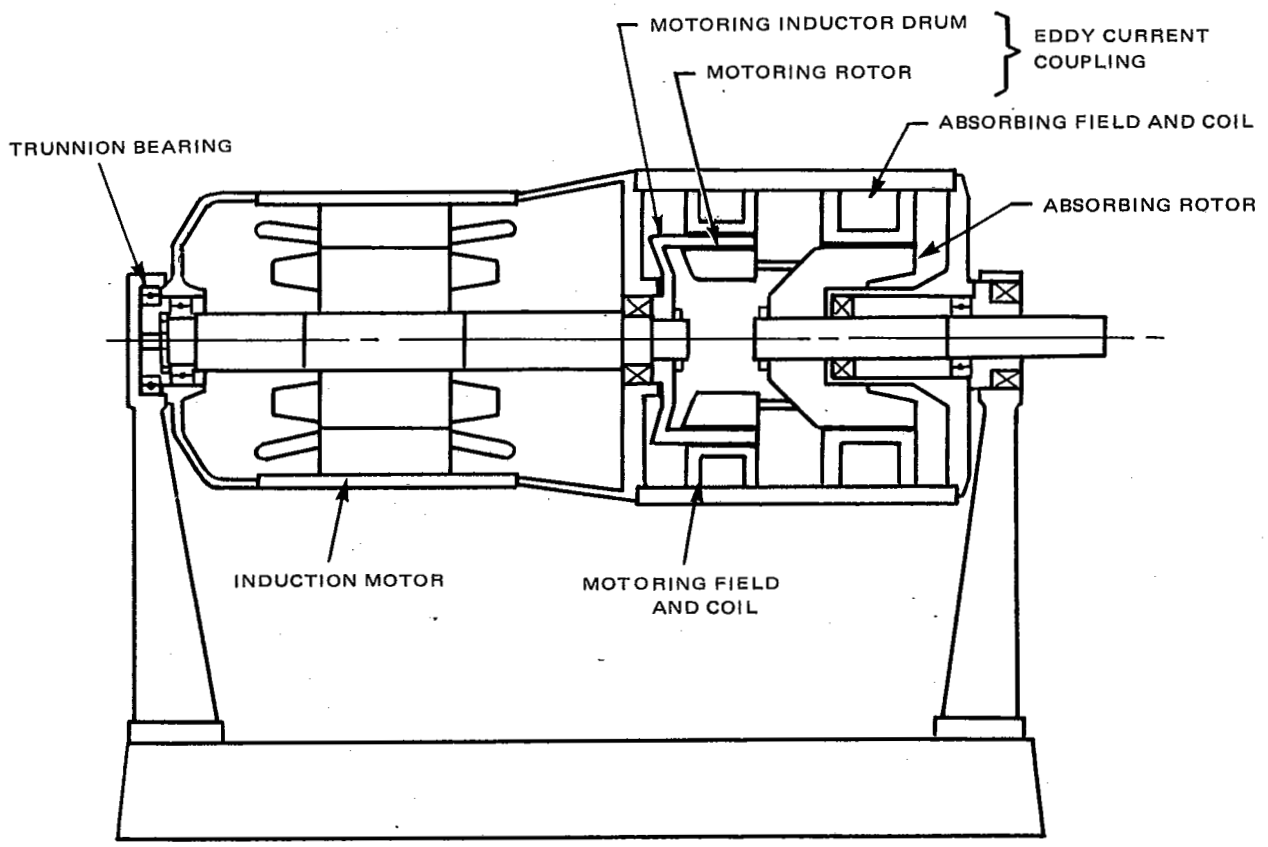

FIG. 7 EDDY CURRENT UNIVERSAL DYNAMOMETER

capacity. Larger units require permanent installation. Agitator type waterbrakes are capable of operation in either rotational direction.

3.28 Momentum–exchange waterbrakes (Fig. 8d) are equipped with cuplike pockets on rotors and stators. Water circulates in a toroidal manner, entering and leaving rotor and stator pockets, and transferring momentum to the stator. Momentum exchange devices are used for low to medium speed applications. Power absorption for a given diameter is high, and rotor sizes are small compared to the other waterbrakes. Tip speeds are restricted to control cavitation damage. Momentum exchange waterbrakes are usually suitable for one direction of rotation.

3.29 The load absorbed by waterbrakes is usually controlled by adjusting the water level in the rotor chambers. This is accomplished with the water inlet and outlet control valves.

3.30 The power absorbing elements of high speed waterbrakes, except for the viscous shear type, are subject to cavitation. Cavitation damage occurs by pitting surfaces on rotor and stator. Typically, the useful service life of a waterbrake decreases with increasing rotor tip speed, and operation above recommended maximum speeds will cause rapid and permanent damage.

3.31 Waterbrakes are capable of absorbing more power and operating at higher speeds than other types of cradled dynamometers. Power-to-weight ratios are high, which accounts for the common use of portable, flanged-mounted units. Waterbrakes are well adapted for transient load and speed tests because of the relatively low moment of inertia. On the other hand, the ability to make fine adjustments in load torque is limited; and some types of high speed waterbrakes have limited useful lives.

3.32 The quantity of cooling water required for eddy current dynamometers and waterbrakes is related to the power absorbed. For open systems, the water is discharged from the dynamometer to waste, and the water outlet temperature is usually limited to 180°F (82°C). Lower water outlet temperatures are preferable to prevent deposition of scale in the machine and in the water outlet control valve. For recirculating systems, the heat is removed from the water by a cooling tower or a heat exchanger. Water

Copyright ASME International
Provided by IHS under license with ASME
No reproduction or networking permitted without license from IHS
Not for Resale

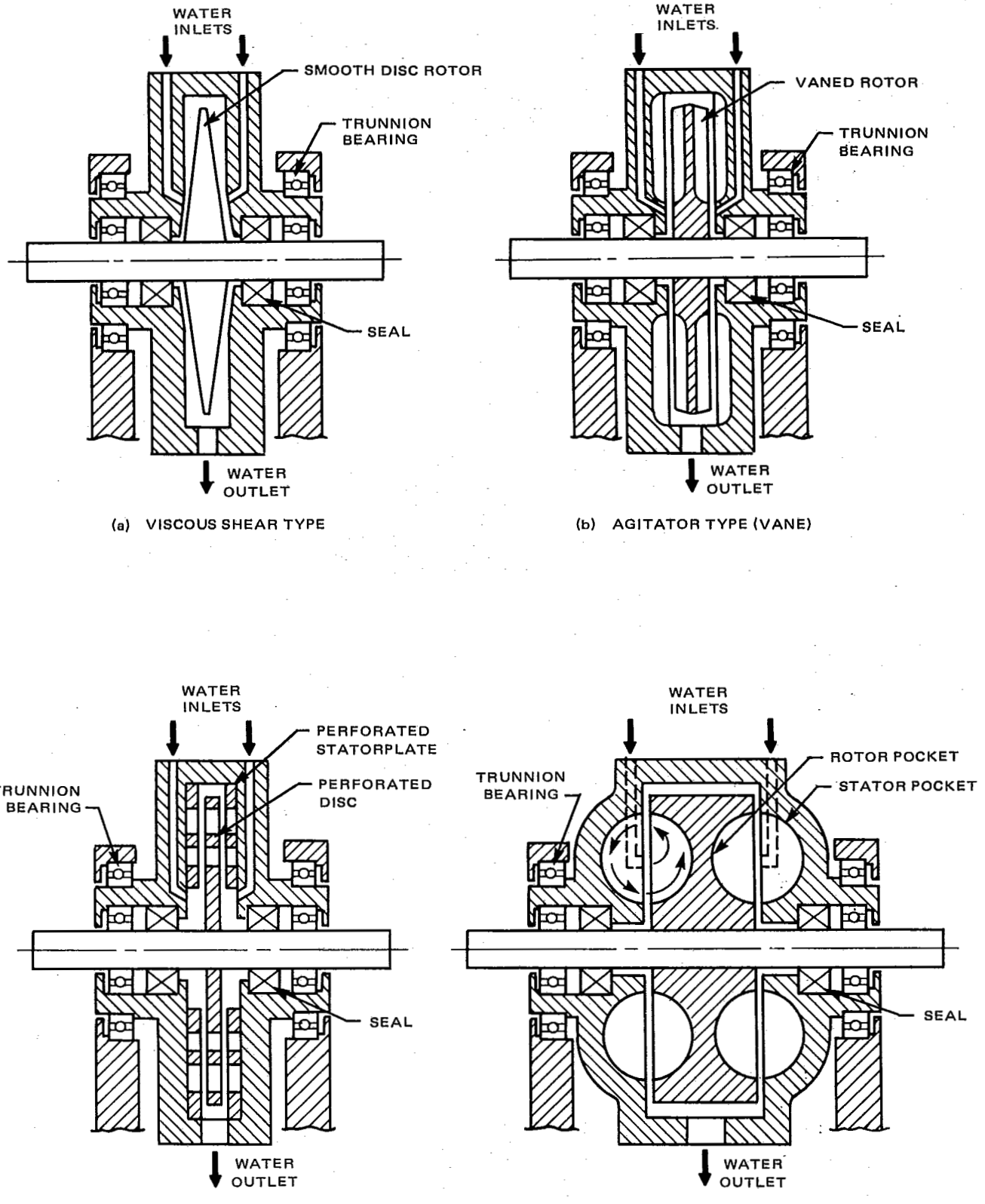

FIG. 8 WATERBRAKE TYPES

Copyright ASME International
Provided by IHS under license with ASME
No reproduction or networking permitted without license from IHS
Not for Resale

flow requirements range from 4 gal/hphr (20 L/kW•h) for an open system to 8 gal/hphr (40 L/kW•h) for a recirculating system. Depending on the type of dynamometer, minimum supply pressures vary between 10 and 100 psig (69 and 690 kPa gage). The water supply pressure should be stable within ±1 psi (±6.9 kPa) to prevent excessive fluctuations of torque and speed. Water quality, in terms of pH and dissolved solids content, is relevant to maintaining dynamometers in good condition.

Motors and Generators

3.33 Cradled electric machines, both direct current and alternating current types, are useful driving and absorbing dynamometers. Their various typical speed-torque relations are indicated in Fig. 6. DC machines have wider range of speed and torque controls than AC machines unless variable frequency AC power systems are available.

3.34 A force measuring system attached to the cradled frame at a known radius is required to measure the reaction torque. Suitable rotational speed measuring devices must be provided.

3.35 When a cradled motor is run uncoupled at a constant speed, an electromagnetic torque is required to supply the "running light" losses of bearing friction, brush friction and windage. This torque reacts to rotate the cradled frame in a direction opposite to that of the rotating armature. But the rotation of the shaft in its bearings, the drag of the brushes on the commutator and reaction of the field structure to windage move the cradled frame in the direction of the armature rotation. These torques and reactions do not cancel out entirely. In actual practice, there is always a difference which will cause the scale to indicate a torque when the dynamometer runs as a motor uncoupled.

The net unbalanced reaction torque is principally the result of the momentum change of the ventilation air stream leaving the motor housing. This torque may be either positive or negative, and will be dependent on the rotational speed and ambient air conditions. The magnitude of this torque reading corresponding to the test speed is to be algebraically subtracted from the readings when the motor is coupled to its load. It is incorrect to compensate for the no-load torque indication with fixed counterweights because of the dependence of the torque on rotational speed and ambient air conditions.

3.36 Electrical wiring connected to the cradled frame must be supported so that no couple is exerted on the frame, whether the conductors are energized or not.

3.37 Cradled DC Shunt Motor. A source of DC power for shunt motors is required as shown in Fig. 9 for both field and armature circuits; usually both field and armature circuits can be energized from the same source. If the armature voltage rating is higher than that of the field and it is desired to use this feature to obtain higher output power, the field must be energized from a lower voltage source or a suitable resistance must be used to keep the field voltage within its rating. In order to operate above the motor base rotational speed, a field rheostat is needed to weaken the field strength.

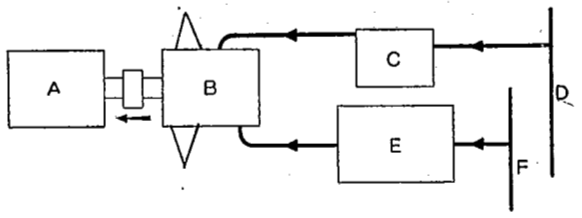

FIG. 9 DYNAMOMETER CONTROL (DC MOTOR)

A Driven machine under test
B Dynamometer (motor)
C Field control
D Field supply line (DC)
E Armature control
F Armature supply line (DC)

3.38 Lower rotational speeds are obtained by using reduced armature voltage; and this requires a variable armature voltage supply (a motor-generator set is usually used). A rheostat may be used in the armature circuit, but difficulty may be experienced in maintaining good regulation.

3.39 A steady voltage supply both for field and armature is necessary for good control of speed and load.

3.40 Zero scale readings should be measured and recorded before and after each test. It is important that the field current be zero when these scale readings are taken because the field magnetic forces can exert varying torque on the rotor depending upon its angular position.

3.41 Loss of field excitation can cause a dangerous runaway condition; hence, the wiring and circuitry should be carefully checked for the possibility of any such malfunction. Usually, a field current relay is used which will open a circuit breaker in the armature circuit if the field current drops to zero or becomes too low.

3.42 Cradled AC Motor. The rotational speed of an AC motor depends on the alternating current supply frequency rather than on the supply voltage. The adjustment of field current, if the motor has a field, will not affect the rotational speed. Such limitations restrict the use of alternating current motors operating on utility power to those cases where the motor characteristics match the required test

Copyright ASME International
Provided by IHS under license with ASME
No reproduction or networking permitted without license from IHS
Not for Resale

conditions. Repetitive observations at essentially the same rotational speed are practical with this type of dynamometer.

3.43 If the cradled machine is a synchronous motor, its rotational speed is in precise ratio to the supply frequency. The motor will carry loads up to about 150% of its rated torque. See Fig. 6.

3.44 An induction motor is somewhat different. While the rotational speed of the induction motor at no load is in direct ratio to that of the supply frequency, it must slip from this no load synchronous frequency to deliver torque. Therefore, there is a change in rotational speed of the motor from the supply frequency as the motor delivers increasing torque. The slip is proportional to torque in the working range, and at rated load is of the order of 2 to 3% of synchronous frequency. See Fig. 6.

3.45 When a range of rotational speeds is required, then a source of variable frequency AC power may be provided to drive either a cradled synchronous or induction motor. Figure 10 illustrates a variable frequency system using AC and DC rotating machinery.

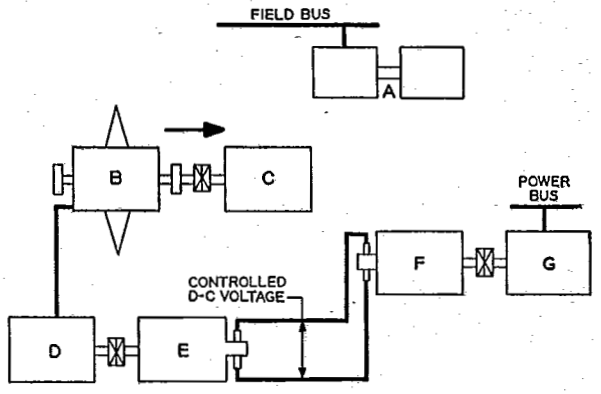

FIG. 10 FACILITIES FOR POWER SUPPLY TO AC DYNAMOMETER AS A MOTOR

A DC exciter, for motor and generator fields
B Dynamometer as AC motor
C Machine under test
D AC generator, variable frequency and voltage
E DC motor, variable speed
F DC generator
G AC motor, constant frequency and voltage

3.46 The variable frequency supply system of Fig. 10 should have an output rating adequate for the maximum output expected of the dynamometer. The driving means for the variable frequency generator must be capable of adjustment over the rotational speed range expected of the dynamometer, and have the capability to furnish the required power. In addition, a source of direct current is needed to supply the fields of the alternator and the cradled synchronous motor. Instability may result from excessive turndown.

3.47 Other systems using solid state AC frequency converters may be used to provide variable frequency power to the AC motor.

3.48 **Cradled DC Shunt Generator.** The characteristics of a typical DC shunt field generator are very similar to those of a shunt motor. DC shunt machines can be used as either motors or generators dependent upon the external circuit and controls. The power rating of a specific dynamometer is higher as a generator than as a motor because the absorbed power is equal to the electrical power plus losses. Usually, the generator rating is 25% to 35% higher than the motor rating. See Fig. 11.

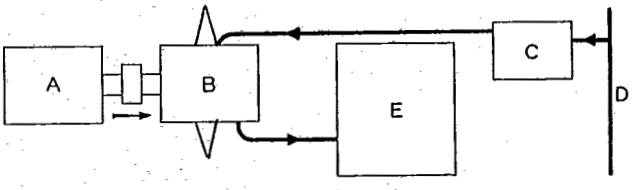

FIG. 11 DYNAMOMETER CONTROL (DC GENERATOR)

A Driving machine under test
B Dynamometer (generator) DC
C Field control
D Field supply line DC
E Armature control and resistance bank

3.49 Maximum torque can be absorbed at rotational speeds below the base value by applying full excitation to the field, and/or decreasing the load resistance. Armature voltage and absorbed power are both directly proportional to rotational speed up to the base value; above this point the field must be reduced to stay within a power rating which is constant at all rotational speeds above the base value.

3.50 A special procedure is required with generators as dynamometers to determine the relation between 1) the minimum power required for generator windage and other unbalanced reaction torques, and 2) the associated dynamometer torque indication.

3.51 This procedure, which is described in Appendix A, determines a value called the "Dynamometer correction," D_C measured in power units. The correction is required to

Copyright ASME International
Provided by IHS under license with ASME
No reproduction or networking permitted without license from IHS
Not for Resale

properly include the "running light" power requirement as a part of the useful output of the driver under test. The determination of D_C is made with a driving motor and suitable electrical instrumentation, as given in Appendix A. The dynamometer correction in power units with the proper algebraic sign is determined from the following:

$$D_C = P_{NF} - (P_{RL} + P_D)$$

where

D_C = dynamometer correction

P_{NF} = power input to driving motor with dynamometer coupled but its field unexcited

P_{RL} = power input to driving motor with dynamometer uncoupled

P_D = dynamometer power indication when P_{NF} is determined.

3.52 A source of DC power is required, as shown in Fig. 11. The external field controls should provide for field voltage variation from zero to maximum. (This zero voltage feature is neither necessary nor desirable for operation as a motor because complete loss of field excitation would cause a runaway condition.)

3.53 The generated power must be dissipated. This is normally done by a bank of resistors designed for the maximum load. This is the simplest circuit, and although the power is wasted, the control of load is convenient and fairly independent of external conditions. It is possible to feed the armature power into a power line and utilize the energy but the stability and control problems are more complicated.

3.54 A steady voltage supply for the shunt field is necessary for good control of speed and load. Zero scale readings should be measured and recorded before and after each test. It is important that the field current be zero when these scale readings are taken because the field magnetic forces can exert varying torque on the rotor depending upon its angular position.

3.55 The loss of load while running at high loads can sometimes cause a dangerous runaway condition. If the armature circuit becomes open or the field excitation is lost, the rotor speed may tend to increase. All wiring and circuitry should be carefully checked for the possibility of any such malfunction.

3.56 Cradled AC Generator. The cradled synchronous alternating current generator is suitable for the measurement of torque. It converts mechanical energy into electrical energy, which may be dissipated as heat in a resistance load or delivered into a utility network so that the energy can be used.

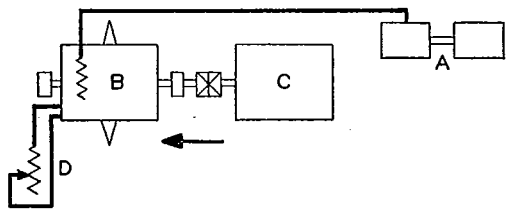

FIG. 12 FACILITIES FOR POWER SUPPLY TO AC DYNAMOMETER AS A SINGLE-PHASE GENERATOR WITH A RESISTANCE LOAD

A DC exciter to dynamometer field
B Dynamometer single-phase generator
C Machine under test
D Resistance load

3.57 When the energy converted by the generator is to be dissipated as heat (Fig. 12), the steps in the operation are almost identical with those steps followed in operating a direct current generator. The means of loading may be more involved if the alternating current generator is polyphase (Fig. 13). If the loading provides adjustments to maintain balanced polyphase loads, the complication is minor. The increase or decrease in load is accomplished by a change in the dynamometer load resistance or change in dynamometer field excitation, or both.

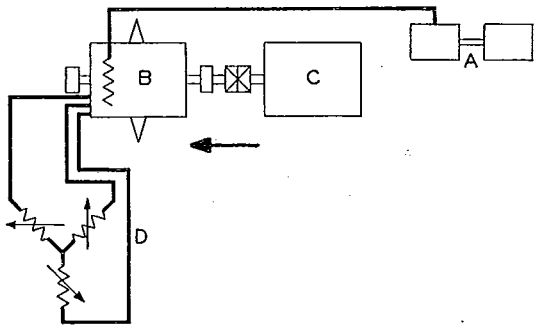

FIG. 13 FACILITIES FOR POWER SUPPLY TO AC DYNAMOMETER AS A THREE-PHASE GENERATOR WITH A THREE-PHASE RESISTOR LOAD

A DC exciter to dynamometer field
B Dynamometer three-phase generator
C Machine under test
D Three-phase load resistor

3.58 If it is intended to return the energy to a network (Figs. 14a, 14b), a synchronous alternating current generator or an induction motor used as an asynchronous induction generator is cradled as the dynamometer. In either case, the rotational speed of the dynamometer is estab-

Copyright ASME International
Provided by IHS under license with ASME
No reproduction or networking permitted without license from IHS
Not for Resale

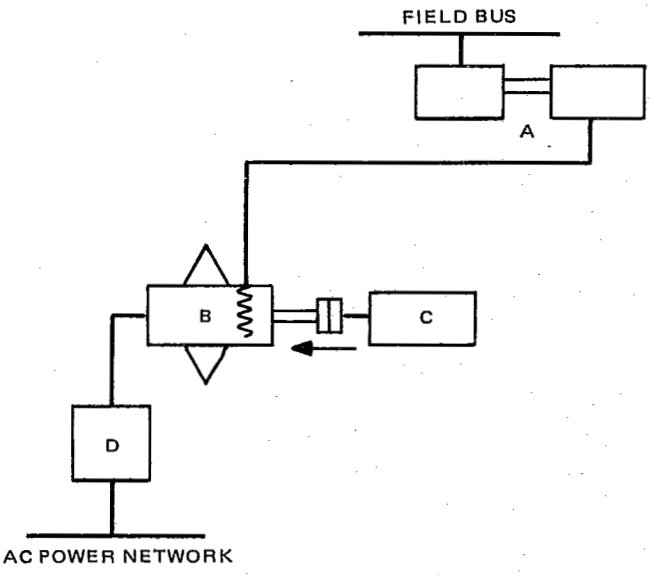

FIG. 14a SYNCHRONOUS GENERATOR RETURNING ENERGY TO UTILITY NETWORK

A DC exciter for alternator field
B Synchronous generator
C Machine under test
D Synchroscope or synchronizing relay

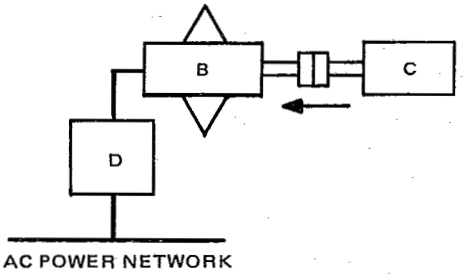

FIG. 14b INDUCTION GENERATOR RETURNING ENERGY TO UTILITY NETWORK

B Induction generator
C Machine under test
D Phase rotation indicator

lished by the frequency of the network generator, and the operation of the dynamometer must match the characteristics of the network generator. Variable speed control of torque load may be provided as shown in Fig. 14c whereby energy is returned to a constant frequency DC generator-motor set.

Adjusting the field strength of the DC generator (Fig. 14c) provides control of the rotational speed and torque of the dynamometer.

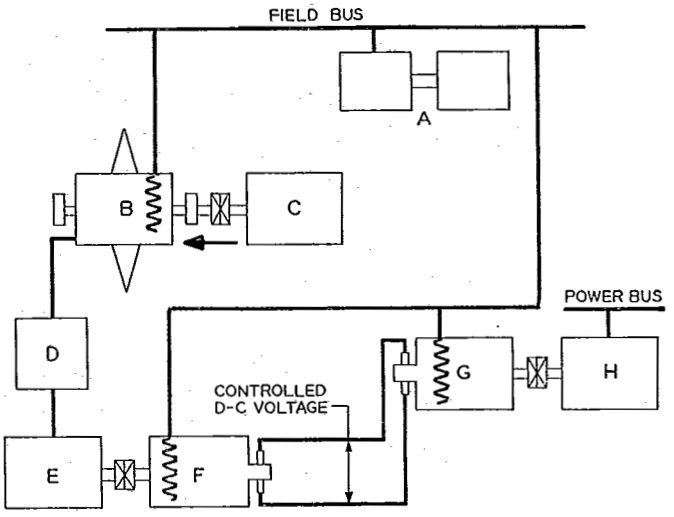

FIG. 14c VARIABLE SPEED SYNCHRONOUS GENERATOR RETURNING ENERGY TO UTILITY NETWORK

A DC exciter, for motor and generator fields
B Dynamometer as generator
C Machine under test
D Synchroscope or synchronizing relay
E AC motor, variable frequency and voltage
F DC generator
G DC motor
H AC generator, constant frequency and voltage

3.59 If an induction motor is cradled and operated as an asynchronous generator, (Fig. 14b), the system is more stable, but more limited in range than a DC generator. To generate, an asynchronous generator must run above the synchronous frequency. The greater the difference between rotational and synchronous frequency, the greater the load the dynamometer is delivering to the line.

3.60 When the cradled AC generator is a synchronous generator as shown in Fig. 12 and the power is to be dissipated as heat, a bank of non-inductive resistors can be used, designed for maximum load. If polyphase power is generated, as shown in Fig. 13, provisions should be made for polyphase resistor connections. A source of direct current is necessary for field excitation.

3.61 It is evident that careful consideration must precede the decision to use an alternating current machine. The use of this facility is definitely restricted compared to the broad limits of use of the direct current machine. Before making a permanent installation the engineering assistance of dynamometer manufacturers should be obtained.

Copyright ASME International
Provided by IHS under license with ASME
No reproduction or networking permitted without license from IHS
Not for Resale

UNCRADLED DYNAMOMETERS

3.62 An uncradled dynamometer contains no trunnion bearings to support a stationary frame. A support system is provided whose useful characteristic is its elasticity. The dynamometer may be either an absorber or a driver. The characteristics of the loading system (viz., eddy current brake, waterbrake, motor, etc.) were described previously in this section.

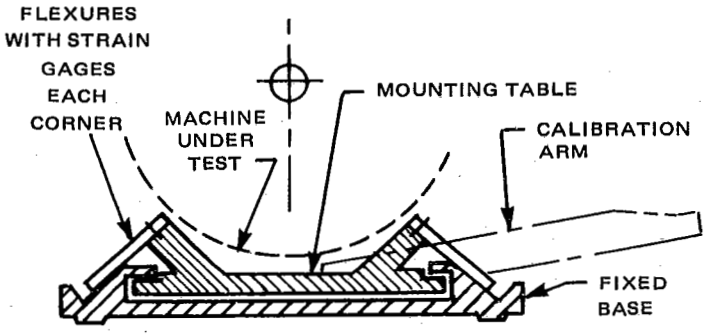

FIG. 15 REACTION TABLE TYPE OF UNCRADLED DYNAMOMETER

3.63 Figure 15 shows one form of an uncradled dynamometer consisting of a movable platform supported on a fixed base by four flexures. The arrangement of flexures is rigid in the radial and axial directions but relatively flexible in torsion. The flexures are usually inclined 45 deg from the horizontal. The platform tends to rotate about an axis determined by the intersections of the projected centerlines of the flexures. The machine whose shaft torque is to be measured is mounted on the platform. The shaft elevation should coincide with the flexure rotational axis. Total angular deflection is typically limited to ½ deg by the stiffness of the flexures.

3.64 Strain gages may be suitably mounted on the flexures, and connected in a bridge circuit so that an electrical signal is produced which senses torque alone. The arrangement of gages and the circuitry ensures that the electrical signal excludes strains in the flexures other than those produced by the torque on the machine frame. The reversibility of the gages and circuitry accommodates either direction of torque, providing freedom for either direction of shaft rotation and either load absorbing or driving. A torque arm is provided for static calibration of the gage system.

3.65 Alternatively, the arrangement of Fig. 15 may be used as a null system, whereby forces are applied to a torque arm until the strain gage network signal is neutralized to its zero-torque value. The applied force then determines the value of the reaction torque. The null system has the advantage of not requiring any rotational displacement thereby avoiding the incursion of extraneous reactions from connections or mass center displacement.

3.66 Figures 16a and 16b show other forms of this dynamometer type. An absorber is flange-mounted to a driver, or to a support, through a torque tube which carries suitable mounted strain gages connected in a bridge circuit, so that an electrical signal is produced sensing torque reaction between the machine frames, or between one frame and a support. The gage arrangement and bridge circuit is such that the signal senses torque alone, to the exclusion of strains produced by other sources of forces and moments carried by the torque tube. These systems are capable of sensing torque in either direction.

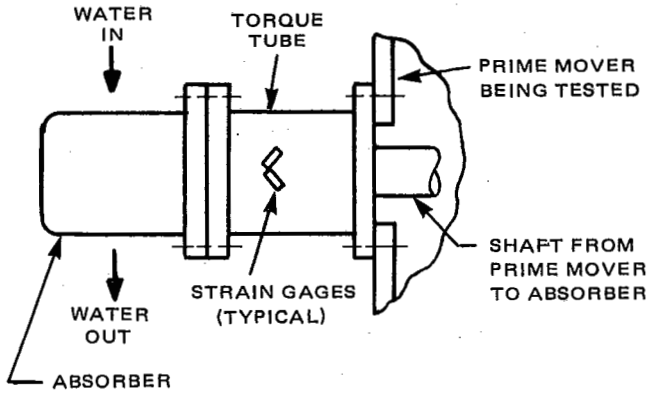

FIG. 16a TORQUE TUBE TYPE OF UNCRADLED DYNAMOMETER

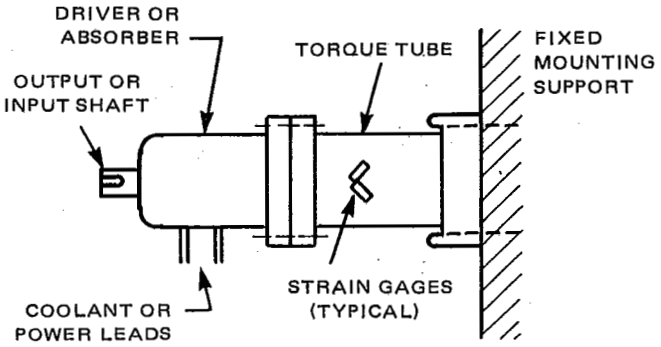

FIG. 16b TORQUE TUBE TYPE OF UNCRADLED DYNAMOMETER

3.67 Several choices of output indicators or recorders are available for displaying the output signal. An output indicator or recorder which indicates a time-average value of torque fluctuations may be desired for constant-speed, steady-state test conditions. On the other hand, oscilloscopes, oscillographs and x–y plotters having suitable re-

Copyright ASME International
Provided by IHS under license with ASME
No reproduction or networking permitted without license from IHS
Not for Resale

sponse may be used to display or record cyclic and transient torque variations.

3.68 Torque error may be ± 0.5% to ± 1.0% of full scale torque; depending upon the type of output indicator used. Digital indicators are capable of providing smaller error than analog indicators.

3.69 The torque-sensitive transducers can be calibrated under static or running conditions with dead weights on a torque arm. A calibration of the bridge and output meter may be made by connecting a known resistance across one arm of the strain gage bridge under static or running conditions.

3.70 Any cable or hose connections to the driver or absorber should be positioned and supported to exert a minimum torque on the transducer. Windage reactions of open ventilation systems are to be measured at operating rotational speed and properly reckoned in interpretation of output data. In the case of a foot-mounted machine, the shaft center should coincide with the center of rotation of the platform. Limits of weight and overhung moment on the torque transducer should be observed. Fluctuations of torque can cause errors if they are not averaged accurately by the electrical output indicator. Relevant parts of Table 3 provide typical values for confidence intervals for uncradled dynamometers.

3.71 The uncradled dynamometer eliminates the friction and hysteresis associated with some types of cradle bearings. The torque transducers are free from deterioration from dusty environmental conditions which might foul a cradle-bearing system. The flange-mounted torque tube adapters are portable and easily moved from one machine to another in a production-testing situation, involving similar machines. Strain gages must be handled carefully and protected from accidental damage. Temperature compensation effects must be accurately known, for the strain gages and for the elastic characteristics of the stressed material supporting the gages. There may be coincidence between rotational and natural frequencies which prevent use of uncradled dynamometers. They are not practical for large machines where substantial or complex support structures are required.

Copyright ASME International
Provided by IHS under license with ASME
No reproduction or networking permitted without license from IHS
Not for Resale

SECTION 4

SHAFT TORQUE MEASUREMENT SYSTEMS

4.01 Machine elements such as shafts and coupling spacers which transmit torque experience torsional strain. The materials commonly used for these components have linear elastic properties within their design torque range. Consequently, instrumentation which can be calibrated and which responds to torsional strain comprises a means for measuring transmitted torque.

4.02 The section of the drive train chosen for calibration and measurement is commonly a specially made spacer designed to be interchangeable with a standard coupling spacer element. Alternatively, the test section may be a part of the shaft of the machine being evaluated. Torsional stiffness and stability criteria for load transmission must be observed.

4.03 Errors may arise from changes in shear modulus of the test section caused by temperature changes. Errors

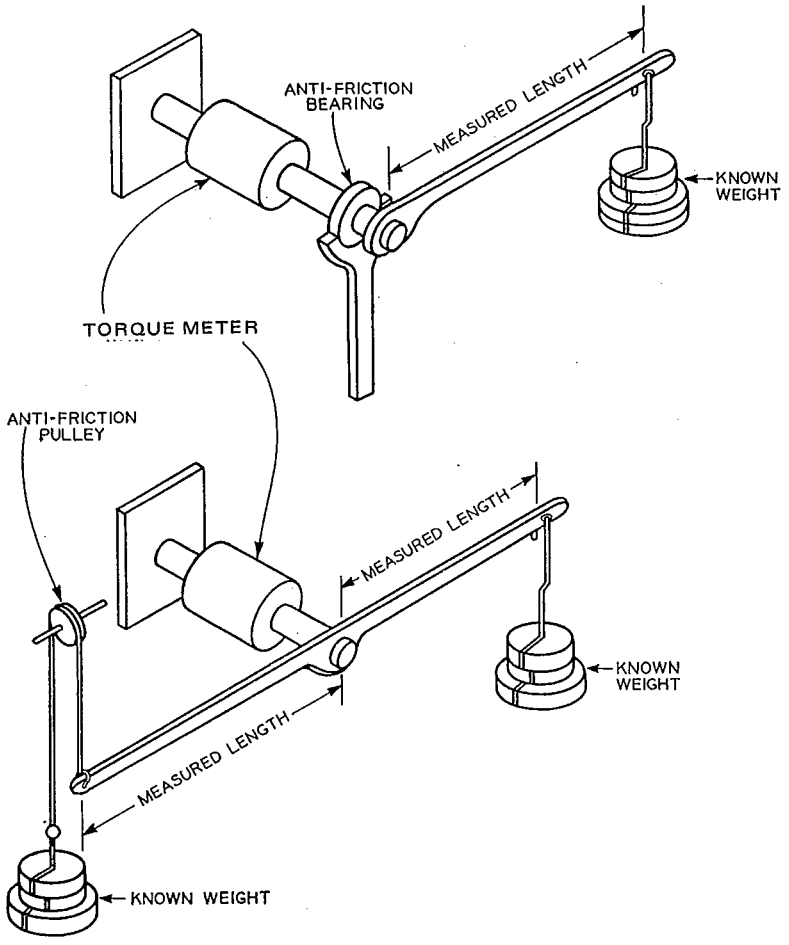

FIG. 17 FIXTURES FOR STATIC CALIBRATION OF SHAFT TORQUE METERS

Copyright ASME International
Provided by IHS under license with ASME
No reproduction or networking permitted without license from IHS
Not for Resale

may arise from dimensional deviations in diameters and gage length. There may be nonlinearity of the deflection and in the instrument systems. Spurious signals may be caused by faulty installation, or by stray electrical currents. When clamping rings are used, their mounting design must be such that the stiffness is very high in the clamped region compared to the gage length stiffness.

4.04 Errors can be minimized by ensuring that the range of the system to be used is appropriate for the application. It is poor practice to use a torque-meter system whose capacity greatly exceeds the requirements of the tests to be conducted.

4.05 Static calibration of the torque meter and instrumentation should be performed to provide minimum data errors. Static calibration fixtures, as shown in Fig. 17, are preferred. Occasionally, in situ calibrations are feasible, provided that the friction forces of the machine's bearings may be made negligible. When such calibrations are lacking, errors of 3% to 5% in torque results will be typical of most installations.

4.06 The effect of temperature on elastic properties of the stressed element must be considered. The shear modulus of most low-alloy carbon steels decreases about 1.5% per 100°F (2.7% per 100°C) increase in temperature. These thermal sensitivity rates are not precisely established and calibration at operating temperature is preferred when possible. Most types of torque shaft systems include compensation for temperature effects in their circuitry. Otherwise the effect of temperature on modulus may be made as part of data reduction, provided the test temperature and modulus sensitivity are known.

4.07 There are two broad types of shaft torque measurement systems:

(a) Surface strain systems – (Par. 4.08ff)

(b) Angular displacement systems – (Par. 4.16ff)

Table 1 provides an indication of the ranges of application of the two types.

SURFACE STRAIN SYSTEMS

4.08 This torque meter type consists of two basic units: the torque sensing elements and instrumentation for indicating the result. The surface strain in the sensing element is measured by means of a resistance wire or foil strain gages bonded to a section of the shaft between the driver and the driven units, as shown in Fig. 18. To assure that the measured strain is not influenced by shaft stress gradients, the gage location should be at least one shaft diameter away from an abrupt shaft discontinuity.

409. Two precisely diametrically opposed pairs of strain gages are bonded to the shaft. Each gage of a given pair is mounted accurately at 45 deg to the axis of the shaft and at 90 deg to the other gage of that pair and interconnected so as to respond only to the principal torsion strains. (Fig. 18.) Strains caused by temperature, bending and thrust loading will be self-cancelling.

4.10 Several methods of transmitting the strain signals from the shaft are available. Slip rings have been a common method of taking the strain signals from the rotating shaft; however, they present problems with regard to signal noise, speed limitations, stability and accessibility.

4.11 Modern methods use radio telemetry systems (usually frequency modulation) or rotary transformers to transmit the signal from the shaft to the indicating equipment.

4.12 The radio telemetry approach is more commonly used. It usually requires less exposed shaft length than other methods. The telemetry transmitter is installed on a rotating shaft area between the driver and driven units. Care should be used to avoid Doppler effects when testing with large shafts.

4.13 The rotary transformer technique requires a custom built spool-piece or coupling that can be inserted between the driver and driven shaft. The power for the strain gages and the rotating transformer can come from either a shaft-

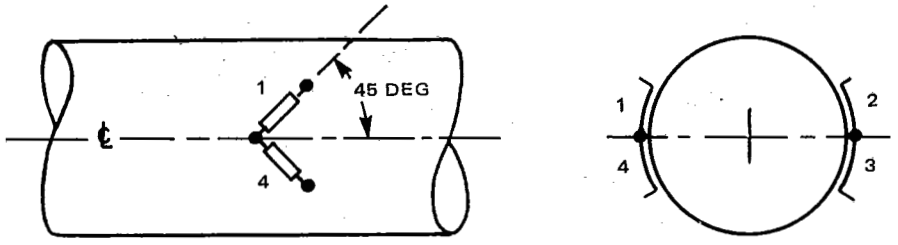

FIG. 18 LOCATION AND ORIENTATION OF STRAIN GAGES ON TORQUE SHAFT

Copyright ASME International
Provided by IHS under license with ASME
No reproduction or networking permitted without license from IHS
Not for Resale

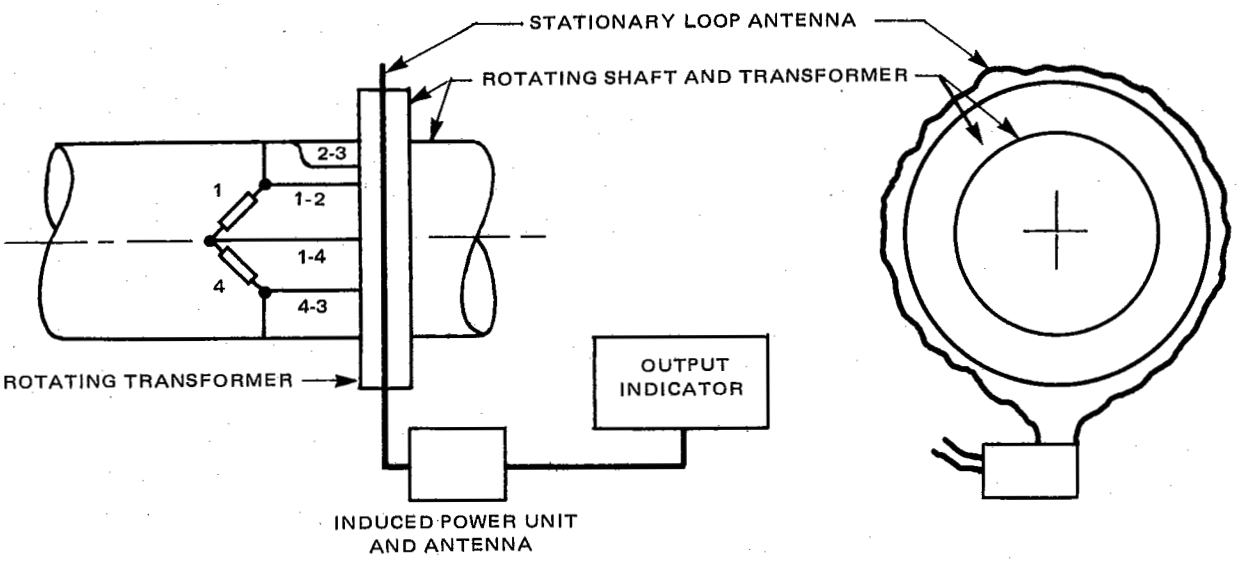

FIG. 19 ROTATING TRANSFORMER SIGNAL TRANSMISSION

mounted battery, or be induced from an AC power supply. The latter is preferred for extended time periods. (Fig. 19.) Rotary transformer systems are less sensitive to electrical interference than are systems using telemetry.

4.14 Electrical calibration of the strain gage system can be achieved by shunting a known resistance in parallel with one leg of the strain gage bridge to simulate a given strain level. (Fig. 20.) A torque arm with known weights is usually used for static calibration. (Fig. 17.) The strain output can be converted to stress, power or torque.

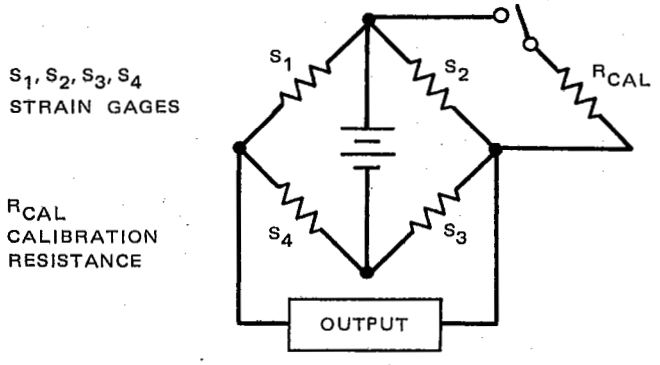

FIG. 20 STRAIN GAGE BRIDGE CIRCUIT WITH CALIBRATING RESISTANCE

4.15 To assure good strain data from the shaft, the gages should be insulated from the shaft by a resistance of 100 megohms, or more. The gages should be made moisture-proof for long term operation. The gages, wiring and rotating elements of the transmitter or slip rings should be mechanically secured to sustain the centrifugal forces of shaft rotation. The least system error is realized when a digital output indicator is used. Analog recorders and readout devices are limited to a lower degree of resolution. If the overall shaft torque system is not calibrated against a known load, the system accuracy is limited by uncertainties of the gage installation, gage factor, gage resistance linearity, shear modulus of shaft material and stress distribution in the shaft near the gages. An electrically calibrated system can limit the error to ±2%. If the overall shaft torque system is calibrated directly with a known torque, the error can be within ±1%.

ANGULAR DISPLACEMENT SYSTEMS

4.16 These torque measuring systems indicate the cumulative angular twist for a finite length (gage length) of shafting; usually contained in a special coupling spacer piece.

The principal types of measuring systems are mechanical displacement, Par. 4.17; electrical displacement, Par. 4.18; and optical systems, Par. 4.19.

4.17 Systems using *mechanical* displacement resemble Fig. 21. Two transducers, which sense displacement, are mounted on opposite sides of the shaft. The transducers are attached to arms extending from clamping rings so that they sense the cumulated displacement over the gage length.

Displacement transducers include proximity sensors, variable capacitance types, differential transformers, strain gages, and taut-wire frequency sensitive types. There are

Copyright ASME International
Provided by IHS under license with ASME
No reproduction or networking permitted without license from IHS
Not for Resale

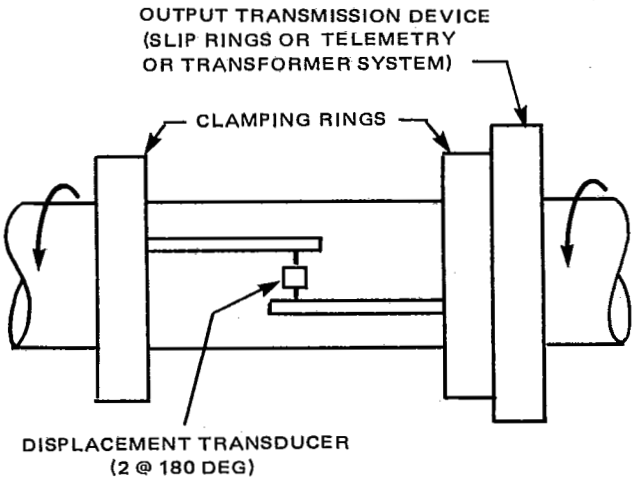

FIG. 21 MECHANICAL TYPE: ANGULAR DISPLACEMENT TORQUEMETER

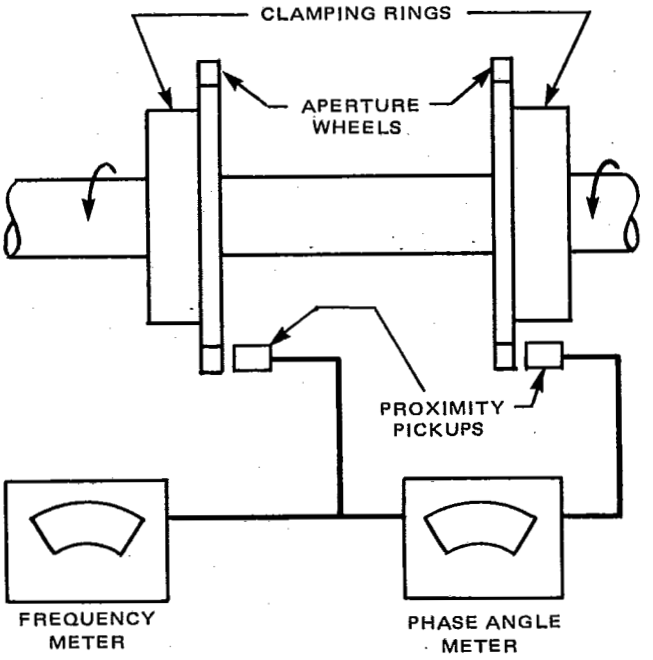

FIG. 22 ELECTRICAL TYPE: ANGULAR DISPLACEMENT TORQUEMETER

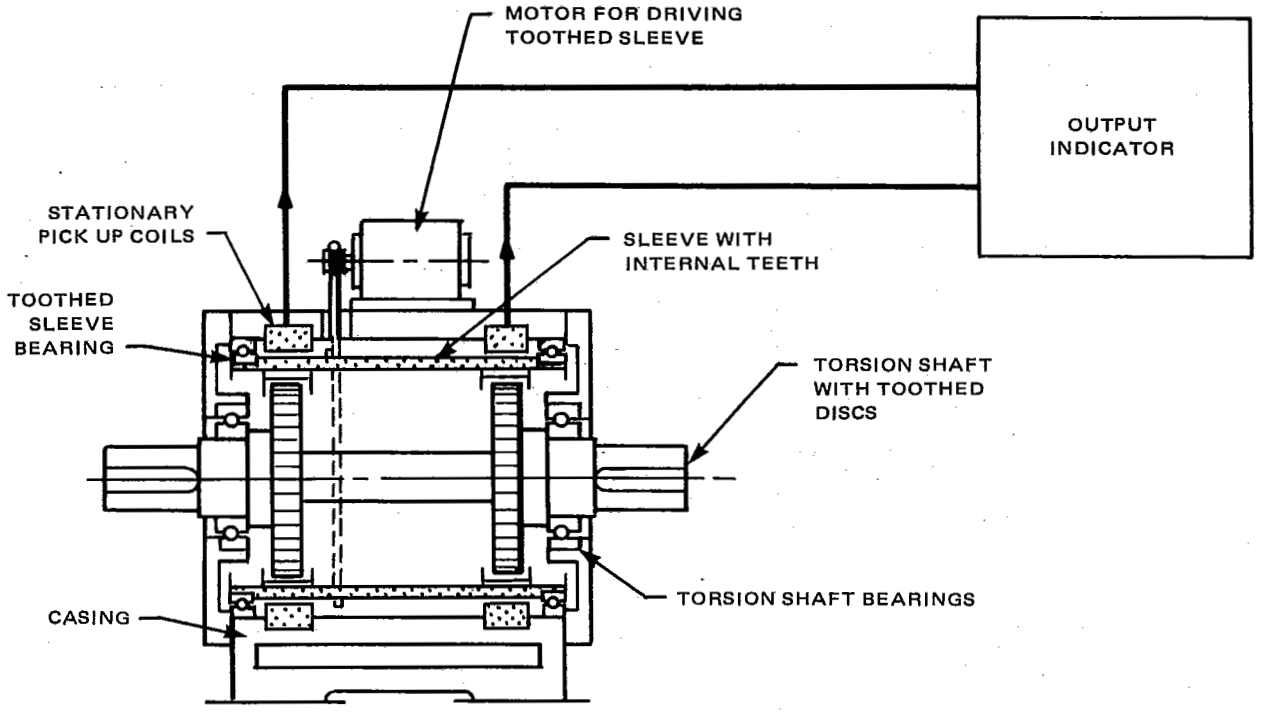

FIG. 23 ELECTRICAL TYPE, WITH STATIC CALIBRATION ANGULAR DISPLACEMENT TORQUEMETER

Copyright ASME International
Provided by IHS under license with ASME
No reproduction or networking permitted without license from IHS
Not for Resale

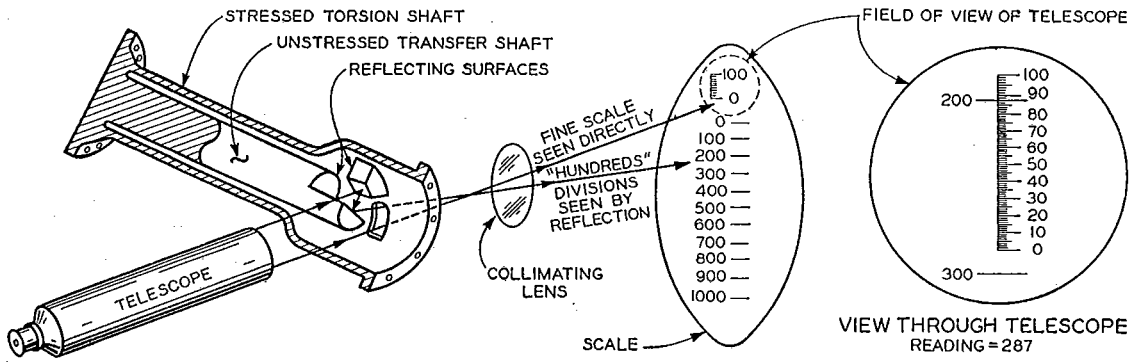

FIG. 24a SCHEMATIC ARRANGEMENT OF OPTICAL TORQUEMETER

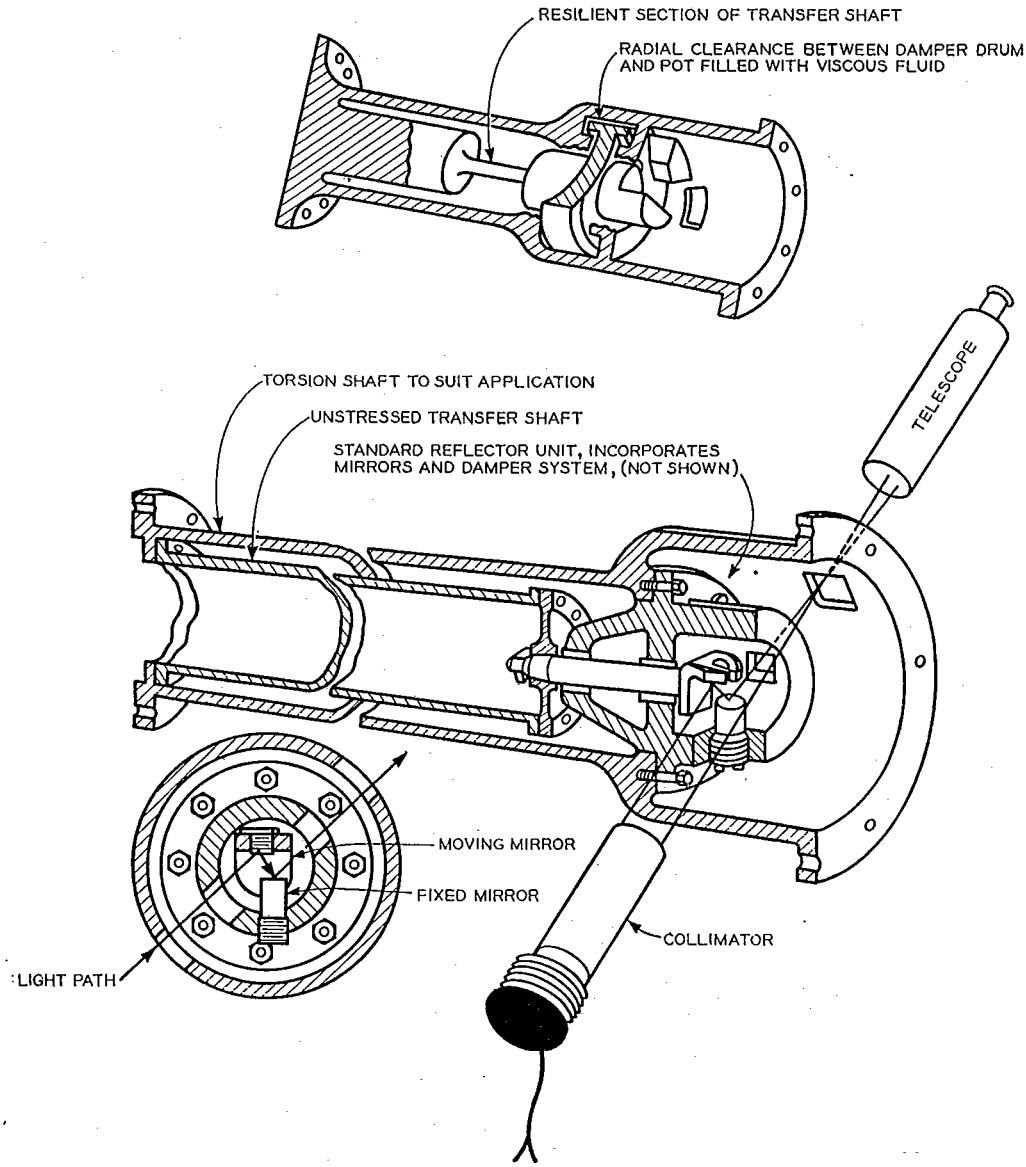

FIG. 24b SCHEMATIC ARRANGEMENT WITH TORSIONAL VIBRATION DAMPER AND DIAGRAMMATIC LAYOUT SHOWING MIRRORS ARRANGED AS A SEPARATE REFLECTOR UNIT

Copyright ASME International
Provided by IHS under license with ASME
No reproduction or networking permitted without license from IHS
Not for Resale

obvious limits imposed on the design of mechanically coupled devices, especially those imposed on gage length of the shaft. Centrifugal forces on the rotating assembly or resonant vibration of the support arms will usually cause errors and define the operating limits.

The electrical signal generated by the transducers is passed to receiving equipment through slip rings or a telemetry transmitter.

The mechanical forms of angular displacement measurement system are rarely used. They are usually designed for a special purpose and are thus unique. Quantification of the error sources requires knowledge of the characteristics of the design and selection of electro-mechanical and mechanical components. They should be statically calibrated.

4.18 Systems using *electrical* displacement resemble Fig. 22. They contain two identical electrical pulse generators, one in each plane, separated by the gage length. One element of each generator rotates, and is usually a disc containing many equally spaced apertures or teeth. The stationary detector for each plane may be a photoelectric cell, a magnetic pickup, a fluidic presence detector or a capacitance pickup; any of which, with appropriate signal conditioning, generate electrical pulses timed by the passing of apertures. The change in phase angle between pulses from the two planes is a measure of the angular displacement between the planes. The rotating element may have as many apertures or teeth as desired. The larger the number, the greater the sensitivity to torque as well as to errors in aperture spacing and shape. Generally, the greater the number of pulses per revolution (compatible with a good signal-to-noise ratio), the more sensitive will be the measurement of torque. The frequency of the generated signals is a measure of shaft speed. Gage length between pulse generators is limited only by the available space. Systems using electrical displacement usually cannot be calibrated statically in a direct manner.

The shaft stiffness over the gage length may be measured by mechanical means in a static torque load fixture (Fig. 17).

One of the stationary pickups should be adjustably positioned by micrometer means so that the relation between angular displacement and signal output can be determined when the rotating system is operating. By these procedures an indirect calibration is provided.

One form of electrical displacement system contains a toothed sleeve which is normally stationary, and provides the pulses in each plane by its magnetic interaction with the rotating toothed discs. When the load shaft is at rest, the toothed sleeve may be rotated by a small motor for the purpose of creating electrical signals with the stationary discs, at their zero torque condition, or with statically applied torque. The design permits static calibration. It is illustrated in Fig. 23.

Principal sources of error are lateral vibration and misalignment between rotating and stationary elements. Typical systems which provide digital readout of power have systematic overall error of about ±1.0% and random overall error of about 0.2% of full scale reading, for a single measurement.

4.19 *Optical* measuring systems depend on the angular deflection accumulated over a gage length and using the deflection to affect the reflection of a light beam. Such systems are illustrated in Figs. 24a and 24b.

The angle between a pair of mirrors connected to opposite ends of a hollow torsion shaft increases as the shaft twists under load. This causes a reflected line of sight to be bent further downwards towards a higher numbered coarse graticule scale division, the image of which is superimposed on that of a fine part of the scale, viewed directly; both scales being seen through a telescope. The principle is that of a sextant, and the collimator is a device for producing a scale image at infinity; which is equivalent to and could in fact be replaced by a distant real scale. The reflected image is seen about 15 deg during each rotation of the shaft and readings are easily taken at speeds as low as 20 rpm.

In practice the torque to be measured may fluctuate considerably, so to obtain steady average readings the transfer shaft is made torsionally resilient and a viscous damper is fitted close to the mirrors to prevent rapid changes of the angle between them.

The telescope has high magnification and a narrow field of view, and is suitable for use up to 40 feet (12 m) from the torque shaft. The torque shaft assembly is usually mounted in its own anti-friction bearings, requiring space and a supporting pedestal between driver and driven machines.

Optical torque meters may be calibrated statically, and this should be done at operating temperatures, as shown in Fig. 17.

Remote indication may be provided by television camera and monitor equipment.

These torque meters may be difficult to use in most environments, where there is background vibration which affects the supports of the torque shaft bearing frame, the collimator and the telescope.

Accuracy of the intrinsic concept is high, with errors limited to 0.25%. However, the environmental conditions usually create uncertainties of larger magnitude, which cannot be predicted.

Copyright ASME International
Provided by IHS under license with ASME
No reproduction or networking permitted without license from IHS
Not for Resale

SECTION 5

POWER MEASUREMENT USING ELECTRICALLY CALIBRATED MOTORS AND GENERATORS

5.01 This indirect method of measuring shaft power may be used when a direct method is impractical. The machine being tested either drives a calibrated generator or is driven by a calibrated motor. The generator or motor can be either of the direct-current type or the alternating-current type. If a motor is used, the electrically measured power input to the motor, less the motor losses, is the power required to drive the test machine. If a generator is used, the electrically measured power output from the generator, plus the generator losses, is equal to the power output of the driving test machine.

5.02 The electrical and mechanical losses of motors or generators may be determined for various operating conditions of load, rotational speed, temperature, voltage, frequency and other independent quantities. This is the calibration procedure. These data may then be used to reconstruct the synthesis of losses for test conditions when the motor or generator is connected to another machine which is being tested. The shaft power is determined from gross electrical power measurement and the synthesis of losses according to the calibration data.

5.03 The test procedure for the calibration of motors or generators is described in IEEE Standards listed as References 3, 4 and 5 in the Bibliography in Appendix D. Test data for motors and generators calibrated by these standards will include all of the operating parameters which pertain to power measurements, such as losses, ambient temperature, winding resistance, temperature rises under load, speed vs load, power input vs output, torques, currents, terminal voltage, and for alternating-current machines, frequency. Performance curves can be plotted from these test data.

5.04 Proper instrumentation and a suitable source of regulated power are required. The power rating of the calibrated machine should be no more than 30% higher than that of the machine under test. The rotational speed of the calibrated machine should match that of the machine under test. Table 4 gives rotational speeds of synchronous and induction machines operating on 50 and 60 Hz power systems. Instrumentation should be in accordance with Reference 6, Appendix D.

5.05 Careful set-up and alignment of the machines is needed to minimize friction losses. The requirements for power supply and instrumentation are given in the referred IEEE Standards. For alternating-current machines, the power supply wave form shall closely approach the sine wave and shall provide balanced phase voltages. The voltage and frequency shall be the same as used in testing the calibrated machine. The voltage must be measured at the machine terminals. For direct-current machines, the power supply should be essentially ripple-free as defined in Reference 5, Appendix D. If the ambient temperature during test differs from the stated calibrated conditions, corresponding adjustments should be made in the calibrated machine losses. IEEE Standards (References 3, 4 and 5) give methods for making these adjustments.

5.06 A maximum error of ±5% may be expected, depending upon observance of precautions and the care exercised in the tasks of measuring and adjusting observed values to stated calibrated conditions. Under ideal conditions, significantly lower error may be obtained.

5.07 There are several advantages in using calibrated motors and generators. They are readily available in a wide range of power and speed ratings. Calibration data may be obtained at a reasonable cost. This method permits the tests to be conducted at the installation site. The power of the machine under test may be evaluated while it is performing its normal function. The calibrated machine may be part of the permanent installation. The principal disadvantages in using this method of shaft power measurements are the relatively high error, and the inability to test machinery at rotational speeds different from those in Table 4 unless gearing is used.

Copyright ASME International
Provided by IHS under license with ASME
No reproduction or networking permitted without license from IHS
Not for Resale

TABLE 4

Direct Drive Rotational Speed for Synchronous and Induction Machines, 50 Hz and 60 Hz

Power Frequency, Hz	Synchronous Machine Rotational Speed r/min.	Induction Motor Rotational Speed at Full Load (Approx.), r/min.	Induction Generator Rotational Speed at Full Load (Approx.), r/min.
60	3600	3525	3660
50	3000	2935	3055
60	1800	1760	1835
50	1500	1465	1530
60	1200	1170	1225
50	1000	975	1020
60	900	875	920
50	750	730	765
60	720	700	735
60 or 50	600	580	610

Copyright ASME International
Provided by IHS under license with ASME
No reproduction or networking permitted without license from IHS
Not for Resale

SECTION 6

ENERGY BALANCE METHODS

6.01 Occasionally it is not possible or practical to measure shaft power by those direct means delineated in other Sections of this Supplement. It may be feasible, in these cases, to determine shaft power indirectly using thermodynamic relations.

The accuracy of results obtained is inferior to that from direct methods. The reasons, briefly stated, relate to the requirement for steady operating conditions over an extended time period, the large amount of data required, the uncertainty of fluid thermodynamic properties, and the uncertainty of measurements of fluid condition.

6.02 Compressors, blowers, fans, expanders, steam turbines, combustion gas turbines, water-cooled brakes and pumps are examples of machine types whose shaft power may be determined, under some conditions, using energy balance methods.

6.03 In some cases, the relevant Performance Test Code provides the specific details on procedures, measurements, limitations, errors, and other information for determining shaft power. When such instructions exist and are relevant, they may override this Supplement.

6.04 Two approaches are used. The "open cycle" system involves determining the enthalpy changes and mass flows of all fluid streams entering and leaving the machine. Additional energy quantities for parasitic effects (radiation, bearing and seal friction losses, etc.) are added to provide the relation for power absorbing machines.

$$P = K_p\,(\Sigma(wh)_{out} - \Sigma(wh)_{in}) + K_r Q_r - P_{AUX}$$

(Fig. 25a), (6.04-1a)

or $$P = K_p\,(\Sigma(wh)_{out} - \Sigma(wh)_{in}) + (K_r Q_r + K_m Q_m)$$

(Fig. 25b), (6.04-1b)

and, for prime movers (excluding combustion gas turbines),

$$P = K_p\,(\Sigma(wh)_{in} - \Sigma(wh)_{out}) - K_r Q_r + P_{AUX}$$

(Fig. 25a), (6.04-2a)

or $$P = K_p\,(\Sigma(wh)_{in} - \Sigma(wh)_{out}) - (K_r Q_r + K_m Q_m)$$

(Fig. 25b), (6.04-2b)

where

P = shaft power absorbed or delivered
P_{AUX} = power to electrically driven auxiliaries
w = mass flow rate of fluids, including flows to and from auxiliaries, jackets, coolers, condensers, seals, glands which cross control boundary
h = enthalpy of fluid per unit mass
Q_r = rate of heat radiation and convection to surroundings
Q_m = power losses (mostly mechanical friction) which are revealed in lube oil temperature rise

and K_p, K_r and K_m are unit conversion multipliers to provide consistent units. Refer to Table 6 in Appendix C for conversion factors.

The "closed cycle" system derives from a heat balance with the heat rejected to the cooler(s) in a closed test loop. Considering one water-cooled heat exchanger in a compressor test loop (Fig. 26).

$$P = K_p c w_w (t_{out} - t_{in}) + (K_r Q_r + K_m Q_m) + (\Sigma(wh)_{out} - \Sigma(wh)_{in})$$

(6.04-3)

where

w_w = mass rate of flow of cooling water
$(t_{out} - t_{in})$ = cooling water temperature rise

Closed cycle procedures relevant to Eq. (6.04-3) do not require calculation involving properties of the fluid being compressed or expanded.

The error of energy balance methods is about ±3% at best. Real gas effects in mixtures prevent accurate computation of enthalpy from temperature data in many cases, and in such instances the results will have greater errors. In other cases, as with pumps or hydraulic turbines, the fluid temperature change is so small that greater errors are also to be expected.

6.05 Parasitic losses, Q_r and Q_m must be determined for any energy balance calculation method. These quantities represent heat which is not entrained in the main or leak-

Copyright ASME International
Provided by IHS under license with ASME
No reproduction or networking permitted without license from IHS
Not for Resale

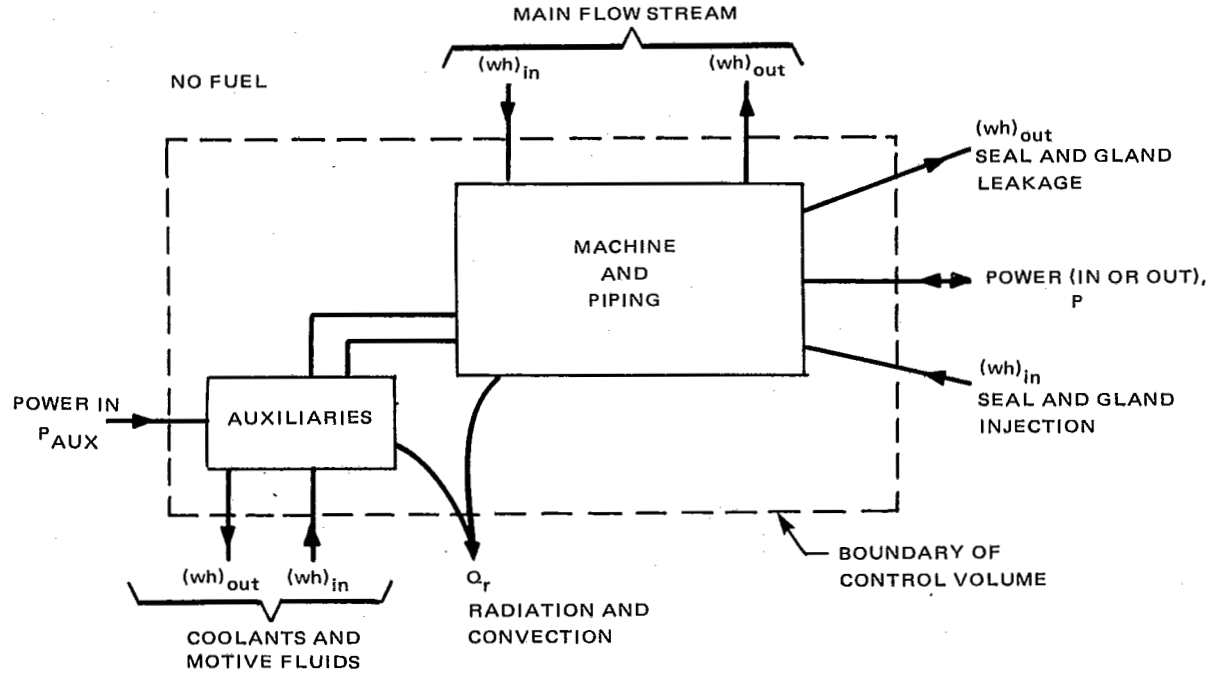

(a)

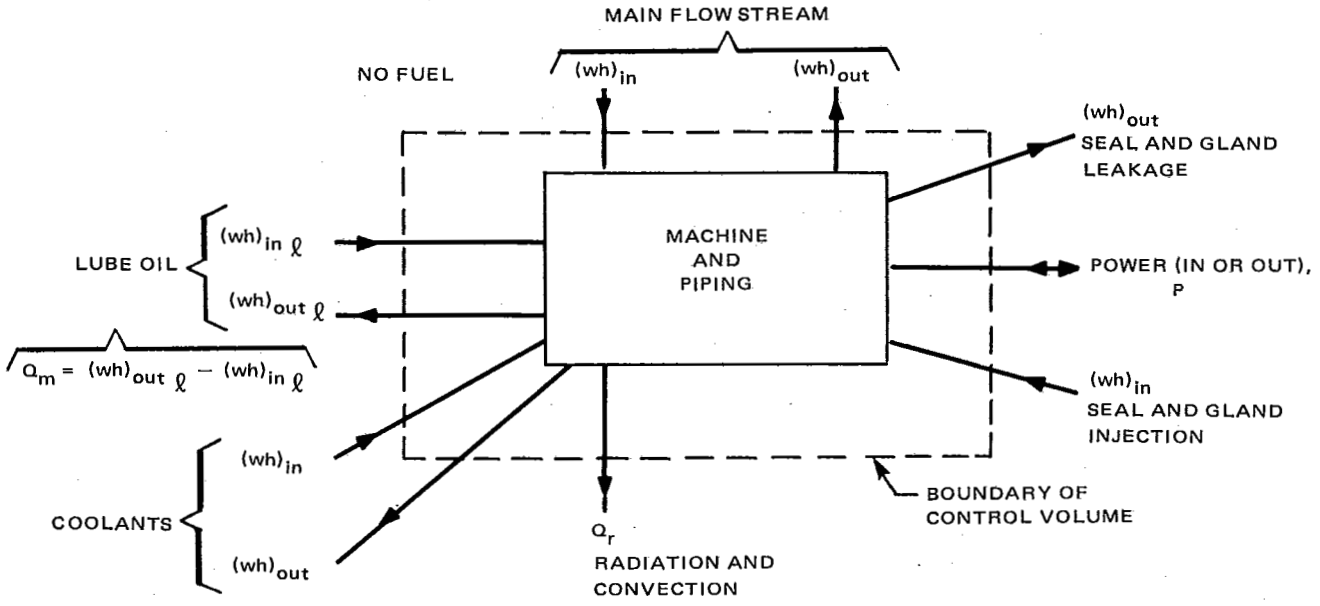

(b)

FIG. 25 OPEN CYCLE CONTROL VOLUME FOR A LOAD ABSORBING MACHINE (Power in) AND A PRIME MOVER (Power out)

Copyright ASME International
Provided by IHS under license with ASME
No reproduction or networking permitted without license from IHS
Not for Resale

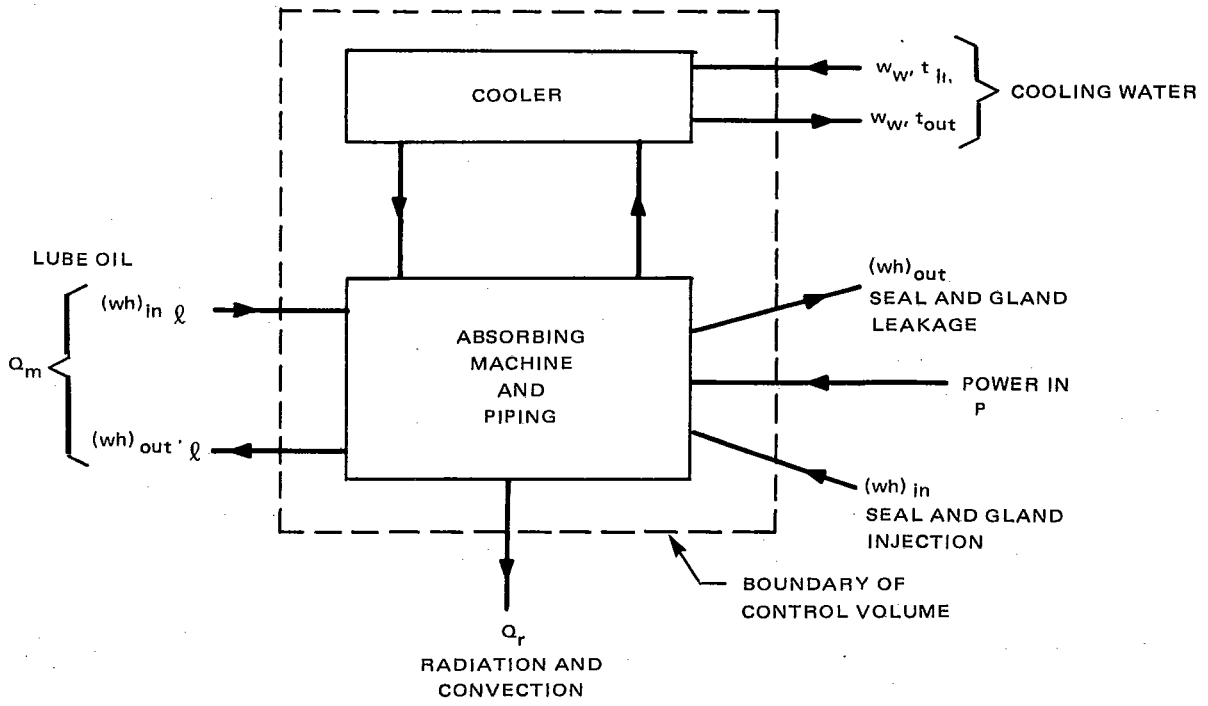

FIG. 26 CLOSED CYCLE CONTROL VOLUME FOR LOAD ABSORBING MACHINE

age fluid streams, and therefore not registered by enthalpy change in any of the (wh) terms of Eqs. (6.04-1b), (6.04-2b), or (6.04-3).

The heat equivalent to the mechanical losses of bearings and seals, Q_m, shall be determined from the temperature rise of the lubricating oil. The quantity of oil flowing shall be determined by calibrated flow meters.

The external heat loss by radiation and convection from casing and connected piping, Q_r, may be computed with acceptable error from measurements of the exposed surface area, the average temperature of the surface, and the ambient temperature, by the formula.

$$Q_r = S_c\,(t_c - t_a)\,h_r \qquad (6.05\text{-}1)$$

Where a hot surface temperature varies from one place to another, as in large multistage compressors, it is advisable to divide the casing into arbitrary sections, determine the area and temperature of each separately, and thus obtain an approximate integrated average temperature for the total surface. In most circumstances, it is recommended that heat loss be minimized by the application of a suitable insulating material.

OPEN CYCLE SYSTEMS

6.06 For many fluids, liquid and vapor, the enthalpy values may be obtained from published data. Enthalpy for mixtures of gases are obtained from the enthalpies of the constituents and the mol composition. If enthalpy tables are not available, the power input to a gas stream for a perfect gas may be computed as the product of the mass flow and $c_p\Delta t$, where c_p is the average. For real gases

$$h = \frac{c_p \Delta t}{1 + \eta_p X} \qquad (6.06\text{-}1)$$

where

$$X = \frac{t}{V}\left(\frac{\delta V}{\delta t}\right)_p - 1, \qquad (6.06\text{-}2)$$

and η_p is an assumed value for polytropic efficiency. Bearing and seal friction losses and external heat loss from the casing may be measured in accordance with Par. 6.05.

The following requirements and limitations shall apply:

(a) The temperature rise of the fluid stream between the inlet and the discharge shall be measured with instruments suitably selected and applied, to provide an error limit within 1%. The sensitivity and readability of the temperature measuring instruments shall be within ½% of the temperature rise.

(b) No fewer than four temperature measuring instruments shall be used at each station, and their tips shall be placed within the pipe section to indicate the approximate average of the stream temperature.

Copyright ASME International
Provided by IHS under license with ASME
No reproduction or networking permitted without license from IHS
Not for Resale

Instruments in wells should be bottomed.

(c) A temperature traverse shall be made at each measuring station on two centerlines, 90 deg apart, unless the use of wells is required. The maximum temperature deviation shown for any reading at either station shall not exceed 1% of the temperature rise. Deviation is defined as departure from the average of ten readings, at uniformly spaced traverse points, per diameter. If the temperature rise is more than 50°F (28K) and the deviation of any one instrument reading at either measuring station is not more than 1% of the rise, the temperature traverse procedure may be omitted and replaced by the fixed measuring instruments of (b) above.

(d) Temperature equilibrium shall be established before starting the test reading. Acceptable equilibrium will be demonstrated by ten or more readings, uniformly spaced, for a period of one hour, in which the temperature rise drift does not exceed 2% of the temperature rise.

(e) The combined losses from Par. 6.05 expressed in percent of total shaft power shall not exceed 5%.

(f) Gas or vapor temperature readings shall have a minimum of 20°F (11K) superheat at every location.

(g) Instrumentation location and type shall conform to the respective Supplements on Instruments and Apparatus with respect to measurement of flow, pressure and temperature. (References 7, 8, 9, Appendix D).

CLOSED CYCLE SYSTEMS

6.07 Where the heat exchanger is used in a closed loop compressor test arrangement, as illustrated in Fig. 27, the heat appearing in the cooling water may, under limited conditions, be used to determine the net power input to the test machine in accordance with Eq. (6.04-3).

In those cases where the data required for open cycle testing are available, the results from those data may be compared to the results from the closed loop tests. In other words, the results of Eqs. (6.04-1b) and (6.04-3) may be checked.

6.08 The heat exchanger method shall be used with the following requirements and limitations:

(a) The cooling water supply shall be stable in pressure and temperature so that fluctuation of flow rates will not deviate more than 2% and temperature by not more than 1% of the temperature rise.

(b) The cooling water flow meter shall be selected and calibrated to maintain the error limit within ½% at test conditions. Meters which can indicate the presence of fluctuating flow conditions (venturi, orifice, flow nozzle) are preferred.

(c) The cooling water flow rate shall be regulated so that the water temperature rise is not less than 20°F (11K).

(d) Two or more thermometers shall be used at each station for water inlet and water outlet.

(e) The thermometers shall be selected to accommodate the working range, sensitive and readable to ½% and, with calibration, having a maximum error of 1% of the temperature rise.

(f) Spinners or similar devices shall be used to insure thorough mixing of the outlet stream.

(g) The combined losses described in Par. 6.05 shall not exceed 5% of the total shaft power.

(h) Instrumentation location and type shall conform to the respective Supplements on Instruments and Apparatus with respect to measurements of flow, pressure and temperature. (References 7, 8, 9, Appendix D.)

Copyright ASME International
Provided by IHS under license with ASME
No reproduction or networking permitted without license from IHS
Not for Resale

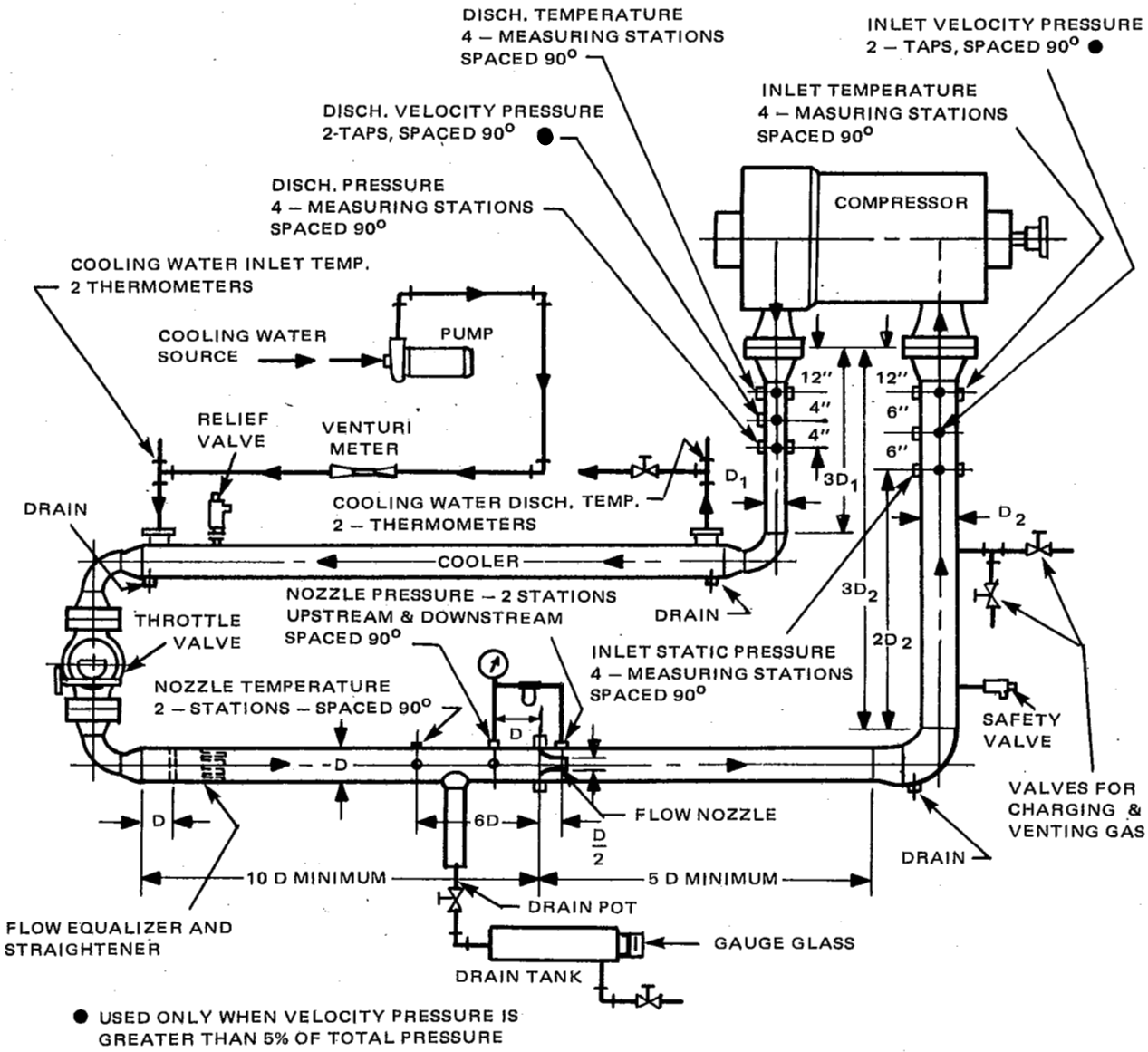

FIG. 27 CLOSED CYCLE LOOP TEST ARRANGEMENT

Copyright ASME International
Provided by IHS under license with ASME
No reproduction or networking permitted without license from IHS
Not for Resale

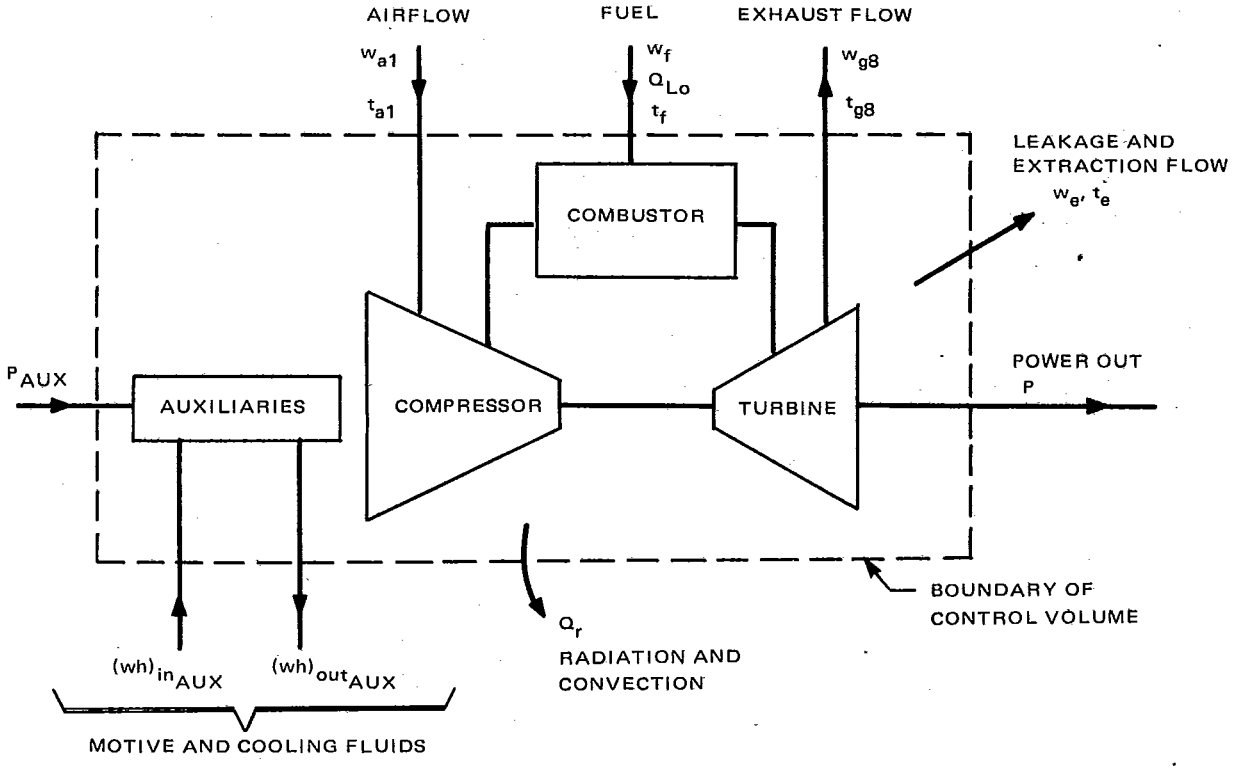

FIG. 28 CONTROL VOLUME FOR COMBUSTION GAS TURBINE

OPEN CYCLE COMBUSTION GAS TURBINES

6.09 Power output for gas turbines may be determined by a heat balance method. A heat balance equation is written for a control volume (Fig. 28) which accounts for all quantities of heat, energy and mass entering and leaving. One of these quantities is the power output, the quantity to be indirectly measured.

The probable error in shaft power is about ±6% for simple cycle turbines and about ±4% for regenerative cycle turbines.

6.10 The heat balance statement is:

$$P = K_p\, w_{a1}\,(h_{a1} - h_{ao}) + K_p\, w_f\, Q_{Lo}\, \eta_B + K_p\, w_f\, c_{pf}\,(t_f - t_o) - K_p\, w_{g8}\,(h_{g8} - h_{go}) - K_p\, \Sigma w_e\,(h_e - h_{ao}) - K_r\, Q_r - K_p\,(wh_{out} - wh_{in})_{AUX} + P_{AUX} \qquad (6.10\text{-}1)$$

where

P = power output
P_{AUX} = power to electrically driven auxiliaries
w_{a1} = mass flow rate of air entering control volume
w_f = mass flow rate of fuel entering control volume
w_{g8} = mass flow rate of combustion products leaving control volume
w_e = mass flow rates of leakage, sealing and extracted gas leaving control volume
h_{a1} = enthalpy of air entering at t_{a1}
h_{ao} = enthalpy of air at reference temperature, t_o
h_e = enthalpy of sealing leakage and extraction air leaving at t_e
h_{g8} = enthalpy of combustion products leaving at t_{g8}
h_{go} = enthalpy of combustion products at reference temperature, t_o
K_p, K_r = conversion multipliers to provide consistent units, Table 6, Appendix C
c_{pf} = specific heat of fuel in t_f to t_o range
Q_r = radiation and convection heat rejection
Q_{Lo} = lower heating value of fuel at reference temperature, t_o
η_B = burner efficiency; (0.99 typically)
$t_{a1} = \frac{1}{w_{a1}} \int t_{a1}\, dw_{a1}$ = flow weighted average temperature
$t_{g8} = \frac{1}{w_{g8}} \int t_{g8}\, dw_{g8}$ = flow weighted average temperature
t_o = reference temperature at which fuel heating value determination is made

Copyright ASME International
Provided by IHS under license with ASME
No reproduction or networking permitted without license from IHS
Not for Resale

t_f = temperature of entering fuel

$\Sigma(wh)_{AUX}$ = summation of mass flow and enthalpy for motive fluids and coolants to and from auxiliaries and lube system

The exhaust flow w_{g8} can be determined indirectly from mass balance for the same control volume, i.e.,

$$w_{g8} = w_{a1} + w_f - w_e \qquad (6.10\text{-}2)$$

6.11 The variables of major importance in Eqs. (6.10-1) and (6.10-2) for the control volume are determined as described in Supplements on Instruments and Apparatus with respect to measurements of pressure, temperature, flow, References 7, 8, 9, and References 10 and 11 for fuel sampling and evaluations; Appendix D. The power output typically will be one-third to one-fifth of the heat consumption. The expected percent error in output, cannot then be less than three to five times the expected percent error in heat consumption. Restrictions are placed on the size of the terms in Eq. (6.10-1) that normally are of minor importance; Q_r, w_e and $\Sigma(wh)_{AUX}$.

In the event these terms exceed the limiting values indicated, improved measurement methods must be devised to preserve the overall accuracy of this indirect power measurement.

The term representing radiation and convection losses, Q_r, will be measured or estimated as detailed in Par. 6.05 of this Supplement. This loss must not exceed 2% of the heat consumption.

Leakage flow of air and combustion products w_e, must be measured or reliably estimated. This will include auxiliary vent flows, such as from the oil tank vapor extractor, shaft packing flows, and cooling and sealing air not mixed with either lubricating oil drain or turbine exhaust flow and casing leakage flow. The total of such measured and estimated leakage flows must not exceed 1% of the inlet flow. Mechanical and auxiliary power losses include only energy leaving the control volume. Many gas turbine arrangements require only the measurement of heat rejection to the lubricating oil cooler, expressed as

$$Q_m = K_m w_w c (t_{out} - t_{in}) \qquad (6.11\text{-}1)$$

where

Q_m = heat rejected to lube oil cooler

w_w = water mass flow rate through the lube oil cooler

$(t_{out} - t_{in})$ = temperature rise of water across the oil cooler

That portion of this loss not subject to precise measurement must not exceed 2% of the heat consumption.

The term representing burner efficiency must be assumed or based on calibrations of the actual gas turbine engine combustion system. The chemical constituents of the exhaust gas, indicating a specific degree of incomplete combustion, shall be measured when the burner efficiency is less than 0.99. Enthalpy of air and of products of combustion shall be evaluated using appropriate thermodynamic tables. Some tests may require additional considerations to properly account for the effects of high specific humidity or unusual fuel chemistry on enthalpy of combustion products. Power output of a single shaft gas turbine may be determined by heat balance methods applied to the driven machine as described in this Supplement, Pars. 6.03 through 6.08.

Equation (6.10-1) provides the value of power to all shaft driven equipment outside the control volume. This may include auxiliary generators, hydraulic drives, gears, pumps, etc., in addition to the primary driven equipment.

6.12 When a free power turbine is used, and when suitable internal instrumentation can be provided, the power turbine shaft output may be computed from measured values of free turbine gas flow, inlet and discharge temperature and pressure, expressed as

$$P = K_p w_g (h_{gi} - h_{g8}) - (K_r Q_r + K_m Q_m) \qquad (6.12\text{-}1)$$

where

P = power output

w_g = mass flow of gas leaving power turbine

h_{gi} = enthalpy of gas entering power turbine

h_{g8} = enthalpy of gas leaving power turbine

K_p, K_r, K_m = conversion constants to provide consistent units. Table 6, Appendix C.

Q_r, Q_m = (radiation and convection) losses, and mechanical losses, according to Par. 6.05, with respect to the free power turbine alone.

Copyright ASME International
Provided by IHS under license with ASME
No reproduction or networking permitted without license from IHS
Not for Resale

SECTION 7

Appendices

APPENDIX A

DETERMINATION OF DYNAMOMETER CORRECTION

7.01 Paragraphs 3.50 and 3.51 refer to the correction which must be determined when a dynamometer is driven as a generator (in the schematic diagram the driver is a DC motor).

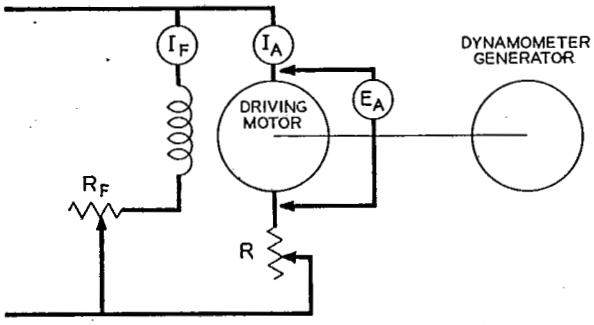

Let

P_{NF} = power input to the driving motor with the dynamometer coupled, but its field unexcited

P_{RL} = power input to the driving motor with the dynamometer uncoupled

P_D = dynamometer power indication when P_{NF} is determined

D_C = $P_{NF} - (P_{RL} + P_D)$ = dynamometer correction.

Theoretically if P_{RL} and P_D are measured separately their sum should equal P_{NF} and D_C would then equal zero. The determination of quantity P_D may be considered the evaluation of unknown errors in the input-output power measurement, particularly when it is assumed that the other two measured values are true values. They are true values if some other sources of error are neglected such as differences due to (1) heating in the driving motor input circuit; (2) changes in iron losses; (3) friction in the drive motor; and (4) measurement of light torque (less than 10% of rated torque) by the dynamometer.

Difference (1), (heating in the driving motor input circuit) influences the determination in the ratio of the driving machine rating to the dynamometer rating. If the driving machine rating is about equal to the dynamometer rating, the difference in input current (heating) between the machine running light and the machine driving the dynamometer with no field, is small, and the error due to heating is probably of second order. However, if the driving machine is, say, 20% of the dynamometer rating, there will probably be a readable difference in input current, and the P_D value will be a greater percentage of the driving machine rated output. Therefore large values of D_C should be carefully reviewed to verify their authenticity.

Difference (2), (changes in iron losses) are indeterminate. They are only affected by changes in the internal generated voltage and if they vary, the variation is measurable to a limited extent by the changes in input current between the P_{NF} measurement and the P_{RL} measurement.

Difference (3), (friction changes) are controlled by maintaining uniform conditions of operation such as running to a constant temperature or always observing under a stated condition. Friction in the bearings supporting the dynamometer frame has greater influence on accuracy than friction in the journals supporting the rotating members. Most consistent results will be obtained if the observations are made after steady-state conditions are attained.

Difference (4), (effect of residual errors in the measurements of input-output when the driving machine rating is a small fraction of the dynamometer rating) is self-evident. The logging of values of D_C provides a basis of comparison to evaluate the accuracy of subsequent determinations of D_C and further serves to indicate when steps should be taken to make a complete inspection of the dynamometer.

7.02 The following explanation indicates a more precise measurement of the dynamometer correction using direct-current driving motor.

Copyright ASME International
Provided by IHS under license with ASME
No reproduction or networking permitted without license from IHS
Not for Resale

The losses L_G of a generator running with its field unexcited vary with speed and are due to windage, brush friction, and bearing friction. Theoretically L_G should equal the dynamometer indication P_D. The difference between the two is the dynamometer correction D_C. Running the dynamometer at various speeds enables one to determine values of D_C versus speed.

The following terminology will be used:

I_A = armature current in the motor
E_A = voltage across the motor
R_A = armature winding resistance in the motor
R = armature rheostat
R_F = field rheostat
$(Fe)_M$ = iron losses in motor
L_M = motor losses due to windage, brush friction and bearing friction
L_G = dynamometer losses due to windage, brush friction and bearing friction.

The power input P_1 to the driving motor is $E_{A_1} I_{A_1}$. This supplies the armature losses $I_{A_1}{}^2 R_A$, the iron losses $(Fe)_M$, the losses L_M of the motor due to windage, brush friction and bearing friction, and the input to the dynamometer when it is coupled to the driving motor. Thus

$$P_1 = E_{A_1} I_{A1} = I_{A_1}{}^2 R_A + (Fe)_M + L_M + L_G$$

Next the dynamometer is uncoupled, the field rheostat R_F is adjusted to give the same field current (it is essential to keep the iron losses in the motor constant) and the armature rheostat R is adjusted to give the same speed as in the first test. Thus the power input P_2 becomes

$$P_2 = I_{A_2}{}^2 R_A + (Fe)_M + L_M$$

Subtracting

$$P_1 - P_2 = I_{A_1}{}^2 R_A - I_{A_2}{}^2 R_A + L_G$$

Solving for L_G

$$L_G = (P_1 - P_2) - (I_{A_1}{}^2 R_A - I_{A_2}{}^2 R_A)$$

The difference between this value of L_G and the dynamometer indication when P_1 was determined is the dynamometer correction D_C.

The above precise test can be modified as follows to obtain the equations listed at the beginning of this appendix. The first test with the dynamometer coupled but with no field yields:

$$P_1 = P_{NF} = I_{A_1}{}^2 R_A + (Fe)_{M_1} + L_M + L_G$$

In the second test with the dynamometer uncoupled ("running light") adjust *only* the armature rheostat R to get the same speed as in the "no field" test. This means the iron losses $(Fe)_M$ will not be the same. Thus

$$P_2 = P_{RL} = I_{A_2}{}^2 R_A + (Fe)_{M_2} + L_M$$

Rearranging the terms in the two equations yields:

$$P_{NF} - I_{A_1}{}^2 R_A - (Fe)_{M_1} - L_M = L_G$$

$$P_{RL} - I_{A_2}{}^2 R_A - (Fe)_{M_2} - L_M = 0$$

Assuming the iron losses differ only slightly and further that the armature losses are approximately equal, subtract the second equation from the first to obtain

$$P_{NF} - P_{RL} = L_G$$

But the dynamometer correction D_C is the difference between L_G and the dynamometer indication P_D. Hence

$$D_C = L_G - P_D = (P_{NF} - P_{RL}) - P_D$$

or

$$D_C = P_{NF} - (P_{RL} + P_D)$$

This is the form given in Par. 3.51.

Copyright ASME International
Provided by IHS under license with ASME
No reproduction or networking permitted without license from IHS
Not for Resale

APPENDIX B

TABLE 5*

Equivalents
English -- SI Units

Quantity	Multiply Number of	By	To Obtain Number of
Force	pounds force lbf	4.448 222 E+00	newtons N
	newtons N	2.248 090 E-01	pounds force lbf
	pounds force lbf	4.535 924 E-01	kilograms force kgf
	kilograms force kgf	2.204 622 E+00	pounds force lbf
Energy, Work	Btu	1.055 056 E+00	kilojoules kJ
	kilojoules kJ	9.478 170 E-01	Btu
	foot pounds ft-lbf	1.355 818 E-03	kilojoules kJ
	kilo joules kJ	7.375 621 E+02	foot pounds ft•lbf
Power	horsepower hp	7.456 999 E-01	kilowatts kW
	kilowatts kW	1.341 022 E+00	horsepower hp
	kilo joules/second kJ/s	1	kilowatts kW
Length	inches in.	2.540 0 E-02	meters m
	meters m	3.937 008 E+01	inches in.
	feet ft	3.048 E-01	meters m
	meters m	3.280 840 E+00	feet ft
Torque	kilogram force-meters kgf•m	9.806 65 E+00	newton-meters N•m
	newton-meters N•m	1.019 716 E-01	kilogram force-meters kgf•m
	pound force-inches lbf•in.	1.129 848 E-01	newton-meters N•m
	newton-meters N•m	8.850 748 E+00	pound force-inches lbf•in.
	pound force-feet lbf•ft	1.355 818 E+00	newton-meters N•m
	newton-meters N•m	7.375 621 E-01	pound force-feet lbf•ft

*See Note, Table 6.

Copyright ASME International
Provided by IHS under license with ASME
No reproduction or networking permitted without license from IHS
Not for Resale

APPENDIX C

TABLE 6

Conversion Factors for Energy, Mass and Power Units
English and SI Units

K_p, K_r, K_m in Section 6

	Power in hp Units			Power in kW Units		
h units → / K_p / w units ↓	Btu/lbm	ft•lbf/lbm	kJ/kg	Btu/lbm	ft•lbf/lbm	kJ/kg
lbm/s	1.414 8 E+00	1.818 2 E-03	6.082 8 E-01	1.055 1 E+00	1.355 8 E-03	4.536 0 E-01
lbm/min	2.358 1 E-03	3.030 3 E-05	1.013 8 E-02	1.758 4 E-02	2.259 7 E-05	7.560 0 E-03
lbm/h	3.930 1 E-04	5.050 5 E-07	1.689 7 E-04	2.930 7 E-04	3.766 2 E-07	1.260 0 E-03
kg/s	3.119 2 E+00	4.008 3 E-03	1.341 0 E+00	2.326 0 E+00	2.989 0 E-03	1
kg/min	5.198 6 E-02	6.680 6 E-05	2.235 0 E-02	3.876 6 E-02	4.981 7 E-05	1.666 7 E-02
kg/h	8.664 4 E-04	1.113 4 E-06	3.725 1 E-04	6.461 1 E-04	8.302 9 E-07	2.777 8 E-04
Q units	K_r, K_m			K_r, K_m		
Btu/s	1.414 8 E+00			1.055 1 E+00		
Btu/min	2.358 1 E-03			1.758 4 E-02		
Btu/h	3.930 1 E-04			2.930 7 E-04		
kJ/s	1.341 0 E+00			1		
kJ/min	2.235 0 E-02			1.666 7 E-02		
kJ/h	3.725 1 E-04			2.777 8 E-04		

Note: The factors are written as a number greater than one, and less than ten, with six or fewer decimal places. The number is followed by the letter E (for exponent), a plus or minus symbol, and two digits which indicate the power of 10 by which the number must be multiplied to obtain the correct value.

For example 1.745 329 E - 02 is $1.745\ 329 \times 10^{-2}$ or 0.017 453 29.

Copyright ASME International
Provided by IHS under license with ASME
No reproduction or networking permitted without license from IHS
Not for Resale

APPENDIX D

BIBLIOGRAPHY

Reference

1. Benedict, R. P., Wyler, J. S., "Engineering Statistics — with Particular Reference to Performance Test Code Work." ASME paper number 78-WA/PTC-2.
2. Perry & Chilton, "Chemical Engineer's Handbook," Fifth Edition, McGraw-Hill Book Co., New York, 1973, pp. 2.62-2.67.
3. ANSI/IEEE 112-78 — Test Procedure for Polyphase Induction Motors and Generators
4. IEEE 115-65 — Test Procedure for Synchronous Machines
5. IEEE 113-73 — Test Code for Direct-Current Machines with Supplement, 113A-76.
6. ASME PTC 19.6 — 1955 Electrical Measurements in Power Circuits
7. Fluid Meters, Sixth Edition, 1971, ASME
8. ASME PTC 19.3 — 1974 Temperature Measurement
9. ASME PTC 19.2 — 1964 Pressure Measurement
10. ASME PTC 3.1 — 1958 Diesel and Burner Fuels
11. ASME PTC 3.3 — 1969 Gaseous Fuels
12. ASME PTC 19.13 — 1961 Measurement of Rotary Speed

Copyright ASME International
Provided by IHS under license with ASME
No reproduction or networking permitted without license from IHS
Not for Resale

APPENDIX E

SYMBOLS

c	specific heat
e	error in measured value
h	enthalpy
h_r	heat transfer coefficient for radiation and convection in still air from machine and piping surfaces
K_m, K_p, K_Q, K_r	conversion constants to provide consistent units. See Table 6, Appendix C
n	rotational speed, revolutions per unit time
P	shaft power
Q_{Lo}	lower heating value of fuel at reference temperature, t_0
Q_m	rate of energy rejection to lube oil
Q_r	rate of energy rejection to surroundings by radiation and convection
R	radius of torque arm
S_c	area, exposed casings and piping rejecting heat to surroundings
t	temperature, time
T	torque
T_{avg}	time-averaged torque
T^*_{avg}	displacement-averaged torque
V	specific volume
w	mass flow rate
W	work per cycle
X	real gas property, or measured value
X'	true value of the quantity being measured
$\bar{X}$	average of a number of measured values
Δ	period of one cycle
η_B	combustion efficiency
η_P	polytropic efficiency
θ	angular displacement for one cycle
σ	standard deviation
φ	angular displacement
ω	angular velocity

SUBSCRIPTS

a	air
B	pertaining to burner
AUX	pertaining to auxiliaries
avg	average
c	surface
e	leakage, sealing, extraction
f	fuel
g	gas
i	in
ℓ	lube oil
o	out
p	constant pressure
w	water
0	reference condition, fuel heating value
1	inlet condition to gas turbine
8	exhaust condition from gas turbine

Copyright ASME International
Provided by IHS under license with ASME
No reproduction or networking permitted without license from IHS
Not for Resale

INSTRUMENTS AND APPARATUS

These supplementary documents give descriptions of, and directions for, the use and calibration of measuring devices likely to be required.

A specially designed binder for holding these pamphlets is available.

A complete list of ASME publications will be furnished upon request.

SUPPLEMENTS ON INSTRUMENTS AND APPARATUS NOW AVAILABLE

PTC 19.2	Pressure Measurement	(1964)
PTC 19.3	Temperature Measurement	(1974)
PTC 19.5	Measurement of Quantity of Materials: 19.5.1, Weighing Scales	(1964)
PTC 19.6	Electrical Measurements in Power Circuits	(1955)
PTC 19.7	Measurement of Shaft Power	(1980)
PTC 19.8	Measurement of Indicated Power	(1970)
PTC 19.10	Flue and Exhaust Gas Analysis	(1968)
PTC 19.11	Water and Steam in the Power Cycle (Purity and Quality, Leak Detection and Measurement)	(1970)
PTC 19.12	Measurement of Time	(1958)
PTC 19.13	Measurement of Rotary Speed	(1961)
PTC 19.14	Linear Measurements	(1958)
PTC 19.16	Density Determinations of Solids and Liquids	(1965)
PTC 19.17	Determination of Viscosity of Liquids	(1965)
PTC 19.20	Smoke-Density Determinations	(1971)
PTC 19.23	Guidance Manual for Model Testing	(1980)

D00009

Copyright ASME International
Provided by IHS under license with ASME
No reproduction or networking permitted without license from IHS
Not for Resale