ASME PTC 19.3 - 1974

ANSI PTC 19.3 - 1974

REAFFIRMED 1998

FOR CURRENT COMMITTEE PERSONNEL
PLEASE SEE ASME MANUAL AS-11

PART 3

Temperature Measurement

INSTRUMENTS AND APPARATUS

Supplement to

A S M E

PERFORMANCE TEST CODES

REAFFIRMED 2004

FOR CURRENT COMMITTEE PERSONNEL
PLEASE E-MAIL CS@asme.org

THE AMERICAN SOCIETY OF MECHANICAL ENGINEERS
United Engineering Center
345 East 47th Street New York, N.Y. 10017

Copyright ASME International
Provided by IHS under license with ASME
No reproduction or networking permitted without license from IHS

Not for Resale

PART 3

Temperature Measurement

INSTRUMENTS AND APPARATUS

Copyright ASME International
Provided by IHS under license with ASME
No reproduction or networking permitted without license from IHS
Not for Resale

Library of Congress Catalog No. 74-76612

No part of this document may be reproduced in any form, in an electronic retrieval system or otherwise, without the prior written permission of the publisher.

Copyright, © 1974, by
The American Society of Mechanical Engineers
Printed in the United States of America

Copyright ASME International
Provided by IHS under license with ASME
No reproduction or networking permitted without license from IHS

Not for Resale

FOREWORD

The Scope of the work of Technical Committee No. 19 on Instruments and Apparatus is to describe the various types of instruments and methods of measurement likely to be prescribed in any of the ASME Performance Test Codes. Such details as the limits and sources of error, method of calibration, precautions, etc., as will determine their range of application are given.

Only the methods of measurement and instruments, including instructions for their use, specified in the individual test codes are mandatory. Other methods of measurement and instruments, that may be treated in the Supplements on Instruments and Apparatus, shall not be used unless agreeable to all the parties to the test.

This Supplement on Instruments and Apparatus, Part 3 on Temperature Measurement, replaces an older one published during the period from 1952-1961. Since that time the technology of temperature measurement has so changed and broadened that the earlier material has become obsolete. This necessitated a complete revision on the Supplement resulting in the currently expanded and more comprehensive document.

In accordance with the established policy of the American Society of Mechanical Engineers concerning the inclusion of metric (SI or International System) units in all ASME publications, this document includes an Appendix of appropriate conversion factors which will enable the user to utilize both systems. These conversions are listed in the Appendix as they first appear throughout the Supplement. Extensive use was made of the "ASME Orientation and Guide for Use of Metric Units, Third Edition" and The ASTM Metric Practice Guide E380-92." These two publications should be consulted for additional material concerning conversions from the US system to SI units.

This Edition was approved by the Performance Test Codes Committee on July 12, 1973. It was approved and adopted by the Council of the Society by action of the Board on Codes and Standards on May 29, 1974.

Copyright ASME International
Provided by IHS under license with ASME
No reproduction or networking permitted without license from IHS
Not for Resale

Copyright ASME International
Provided by IHS under license with ASME
No reproduction or networking permitted without license from IHS
Not for Resale

PERSONNEL OF PERFORMANCE TEST CODES COMMITTEE NO. 19.3

ON INSTRUMENTS AND APPARATUS

R. F. Abrahamsen, *Chairman*
K. W. Woodfield, *Secretary*

R. F. Abrahamsen, Manager, Technical and Administrative Services, Kreisinger Research Laboratory, Combustion Engineering Inc., 1000 Prospect Hill Road, Windsor, Ct. 06095

R. P. Benedict, Fellow Engineer, STDE, Westinghouse Electric Corp., Lester Branch Post Office 9175, Philadelphia, Pa. 19113

J. T. Callahan, Research Mechanical Engineer, Naval Ship Engineering Center, Philadelphia Division, Applied Physics Department, Philadelphia, Pa. 19112

G. D. Nutter, Assistant Director, Instrumentation Systems Center, University of Wisconsin - Madison, 1500 Johnson Drive, Madison, Wi. 53706

K. W. Woodfield, Professor of Mechanical Engineering, General Motors Institute, 1700 West Third Avenue, Flint, Mi. 48502

Copyright ASME International
Provided by IHS under license with ASME
No reproduction or networking permitted without license from IHS
Not for Resale

Personnel of Performance Test Codes Committee

K. C. Cotton, *Chairman*
J. H. Fernandes, *Vice Chairman*

R. P. Benedict
W. A. Crandall
R. C. Dannettel
C. A. Dewey
V. F. Estcourt
A. S. Grimes
K. G. Grothues
J. L. Hilke
E. L. Knoedler
Paul Leung
F. H. Light
S. W. Lovejoy
W. G. McLean
S. L. Morse
J. W. Murdock
L. C. Neale
W. C. Osborne
W. A. Pollock
J. H. Potter
C. B. Scharp
J. F. Sebald
J. C. Westcott

Copyright ASME International
Provided by IHS under license with ASME
No reproduction or networking permitted without license from IHS
Not for Resale

ASME Performance Test Codes Supplement on Instruments and Apparatus Part 3 Temperature Measurement

TABLE OF CONTENTS

Chapter		Pages
1	GENERAL	1
2	RADIATION THERMOMETERS	12
3	THERMOCOUPLE THERMOMETERS	17
	Section A, Thermocouples	17
	Section B, Instrumentation	27
4	RESISTANCE THERMOMETERS	36
5	LIQUID-IN-GLASS THERMOMETERS	44
6	FILLED SYSTEM THERMOMETERS	55
7	OPTICAL PYROMETERS	70
8	BIMETALLIC THERMOMETERS	86
9	CALIBRATION OF INSTRUMENTS	91
	APPENDIX	134

CHAPTER 1, GENERAL

CONTENTS

	Par.
GENERAL:	
Scope	1
Introduction	2
TEMPERATURE SCALES	4
INSTRUMENTS	5
ACCESSORIES:	
Wells	8
Other Accessories	20
INSTALLATION	21
SOURCES OF ERROR:	
Introduction	25
Conduction Error	26
Radiation Error	27
Heat Transfer at Low Velocity	28
Aerodynamic Heating Effect	29
Heat Transfer at High Velocity	31
Gradient Error	34
Dynamic Error	36
CONCLUSIONS	38
REFERENCES	39

GENERAL

Scope

1 The purpose of this chapter is to present a summary discussion of temperature measurement as related to Performance Test Code work with particular emphasis on basic sources of error and means for coping with them.

Introduction

2 Measurement of temperature is generally considered to be one of the simplest and most accurate measurements performed in engineering. This is decidedly a misconception. Accurate temperature measurement under some conditions is impossible with our present knowledge. Under many of the con-

Copyright ASME International
Provided by IHS under license with ASME
No reproduction or networking permitted without license from IHS
Not for Resale

ditions met in Performance Test Code work, the desired accuracy in the measurement of temperature can be obtained only by observance of suitable precautions in the selection, installation and use of temperature measuring instruments; and in the proper interpretation of the results obtained with them. In some cases an arbitrarily standardized method is prescribed in the Performance Test Codes which is to be followed in making temperature measurements under such conditions.

3 Some of the instruments available for temperature measurement are capable of indicating temperature to a closer degree of accuracy than is required in some of the tests considered in the Performance Test Codes. The difficulty in obtaining accurate temperature measurements with such instruments is encountered in installation or use of the temperature measuring instruments. Specific directions and precautions in usage of the instruments are given in subsequent chapters for each of the various types of temperature measuring instruments.

TEMPERATURE SCALES

4 There are in general use two temperature scales known as the *Fahrenheit* and the *Celsius (centigrade)* temperature scales. A detailed discussion of these and other scales is given in Chapter 9.

In the Fahrenheit scale, the interval between the boiling and freezing points of water at standard atmospheric pressure is divided into 180 equal parts; the boiling point is marked 212, and the freezing point is marked 32. In the Celsius scale, the interval between the same fixed points is divided into 100 equal parts; the boiling point is marked 100, and the freezing point is marked 0. Each of the 180 or 100 divisions in the respective scales is called a *degree*. The reading for a given temperature on one scale may be converted to the corresponding reading on the other scale by use of the following formulas:

$$F = 9/5\ C + 32$$
$$C = 5/9\ (F - 32)$$

where F = reading in deg Fahrenheit
C = reading in deg Celsius.

CONVERSION FACTORS

Tables for converting temperature readings from one scale to another are given in the Appendix.*

*Whenever U.S. Customary units are used in this suppliment the SI equivalent may be calculated by using the conversion factors listed in the Appendix.

INSTRUMENTS

5 The following types of instruments are available for use under appropriate conditions. The chapter numbers refer to chapters in the ASME Performance Test Codes, Supplement on Instruments and Apparatus, Part 3, Temperature Measurement.

(a) Radiation Thermometers (Chapter 2) are temperature measuring instruments in which the intensity of the radiation emitted from a body is used as a measure of the temperature of the body. They consist of an optical system, used to intercept and concentrate a definite portion of the energy radiated from a body whose temperature is being measured; a temperature sensitive element, usually a thermocouple or a thermopile; and a measuring device, such as an electromotive force measuring instrument.

(b) A Thermocouple Thermometer (Chapter 3) is a temperature measuring system comprising a temperature sensing element called a *thermocouple* which produces an *electromotive force* (emf), a device for sensing emf which includes a printed scale for converting emf to equivalent temperature units, and *electrical conductors* for operatively connecting the two. (See Fig. 3.1A.)

(c) Resistance Thermometers (Chapter 4) are temperature measuring instruments in which the electrical resistance is used as a means of temperature measurement. They consist of a sensing element called a resistor, a resistance measuring instrument, and electrical conductors for operatively connecting the two.

(d) Liquid-In-Glass Thermometers (Chapter 5) are temperature measuring instruments in which the differential expansion of a liquid in a closed glass system is used as a means of temperature measurement. They consist of a thin-walled glass bulb attached to a glass capillary stem closed at the opposite end, with the bulb and a portion of the stem filled with an expansive liquid.

(e) Filled System Thermometers (Chapter 6) are temperature measuring instruments in which the change in volume of a liquid, a change in pressure of a gas, or the change in vapor pressure of a volatile liquid is used as a means of temperature measurement. They consist of an all metal assembly comprised of a bulb, capillary tube and Bourdon tube, provided with a temperature responsive fill.

(f) Optical Pyrometers (Chapter 7) are temperature measuring instruments in which the brightness

Copyright ASME International
Provided by IHS under license with ASME
No reproduction or networking permitted without license from IHS
Not for Resale

of radiation in a very narrow band of wavelengths emitted by a source, the temperature of which is to be measured photometrically matched against the brightness of a calibrated source, is used as a means of temperature measurement. They consist of a telescope, a calibrated lamp, a filter to provide for viewing nearly monochromatic radiation, a readout device, and usually an absorption glass filter.

(g) Bimetallic Thermometers (Chapter 8) are temperature measuring instruments in which the differential expansion of two metals is used as a means of temperature measurement. They consist of an indicating or recording device, a sensing element called a bimetallic thermometer bulb, and a means for operatively connecting the two.

6 The above instruments are those which are recommended for ASME Performance Test Code work for the measurement of temperature when used under appropriate conditions.

7 The recommended ranges of use for these temperature measuring instruments when properly installed are indicated in Table 1.1:

TABLE 1.1 RECOMMENDED TEMPERATURE RANGES

Type	Chapter No.	Range of Use, Deg F
(a) Radiation thermometers	2	Ambient and above
(b) Thermocouple thermometers	3	−300 to +4500
(c) Resistance thermometers	4	−450 to +1950
(d) Liquid-in-Glass thermometers	5	−328 to +1110
(e) Filled System thermometers	6	−400 to +1200
(f) Optical pyrometers	7	Above 1300
(g) Bimetallic thermometers	8	−200 to + 800

ACCESSORIES

Wells*

8 Introduction. In many temperature measurements in Performance Test Code work the sensitive element cannot be placed directly into the medium whose temperature is to be measured. In such cases a well may be used, which by definition is a pressure tight receptacle adapted to receive a temperature sensing element and provided with external threads or other means for tight pressure attachment to a vessel [1].**

9 Thermometer wells are used in measuring the temperature of a moving fluid in a conduit, where the stream exerts an appreciable force. For velocities of 300 fps or less, tapered thermometer wells of the design shown in Fig. 1.1, and of dimensions given in Table 1.3, shall be used. For velocities in excess of 300 fps, a fixed beam type thermometer well is recommended [7].

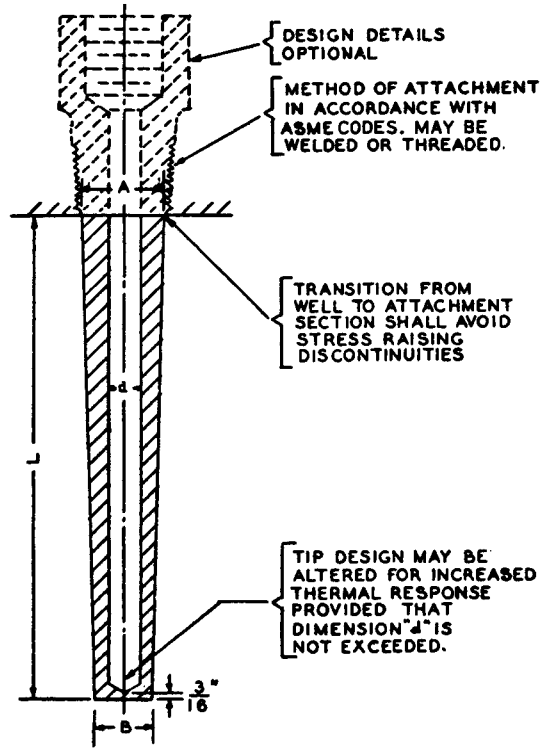

FIG. 1.1 PERFORMANCE TEST CODE THERMOMETER WELLS

10 Attachment to the vessel may be made in any manner approved by the ASME Boiler and Pressure Vessel or Piping Codes. Any material approved by these Codes for the intended service may be used. Where materials are specified for the purposes of

*At the time of the current revision, ASME Ad Hoc Committee PB 51 is writing a new standard for thermowells.

**Numbers in brackets designate References at end of chapter, thus [1].

Copyright ASME International
Provided by IHS under license with ASME
No reproduction or networking permitted without license from IHS
Not for Resale

illustrating the example, no inference is intended that these materials are preferred.

11 For the experimental and theoretical bases of the design procedure set forth herein, Ref. [2] should be consulted.

12 **Strength Versus Measurement.** Those factors required to produce adequate well strength tend to reduce the accuracy and response of the temperature measurement, as shown in Table 1.2 below.

13 Table 1.2 is not all inclusive, but indicates that thermometer well design methods must carefully balance these factors so that accuracy is compromised a minimum when using a well of adequate strength.

14 **Design Procedure.** The purpose of this design procedure is to enable the user to determine if a well selected for thermometry considerations is strong enough to withstand specific application conditions of temperature, pressure, velocity and vibration. Well failures are caused by forces imposed by static pressure, steady state flow, and vibration. Separate evaluations of each of the above effects should be made in order to determine the limiting condition. This design procedure does not allow for effects due to corrosion or erosion.

15 The natural frequency of a well designed in accordance with Fig. 1.1 and of the dimensions given in Table 1.3 is given by the following equation:

$$f_n = \frac{K_f}{L^2}\sqrt{\frac{E}{\gamma}} \qquad (1)$$

where

f_n = natural frequency of the well at use temperature, cycles per sec
L = length of well as given in Fig. 1.1, in.
E = modulus of elasticity of well material at use temperature, psi
γ = specific weight of well material at use temperature, lb per cu in.
K_f = a constant obtained from Table 1.4

The wake or Strouhal frequency is given by:

$$f_w = 2.64\frac{V}{B} \qquad (2)$$

where

f_w = wake frequency, cycles per sec
V = fluid velocity, fps
B = diameter at tip (Fig. 1.1), in.

The ratio of wake to natural frequency (f_w/f_n) shall not exceed 0.8, and when this condition is met, the Magnification Factor, relationship of dynamic to static amplitude is given by:

$$F_M = \frac{(f_w/f_n)^2}{1-(f_w/f_n)^2} = \frac{r^2}{1-r^2} \qquad (3)$$

For $r \leq 0.8$

where

F_M = magnification factor, dimensionless
r = frequency ratio, (f_w/f_n), dimensionless

16 **Stress Analysis.** The maximum pressure that a thermometer well can withstand for a given material at a given temperature shall be computed from

TABLE 1.2 FACTORS THAT INFLUENCE STRENGTH AND MEASUREMENT

Factor	Ideal for Measurement	Ideal for Strength
Length	Long	Short
	Conductivity errors reduced. Active portion of thermometer must be in flow stream.	Impingement force reduced. Higher natural frequency.
Thickness	Thin	Thick
	Reduced conductivity loss. Faster response.	Greater moment of inertia, less stress. Higher natural frequency.
Mass Velocity	High	Low
	Increased heat transfer. Faster response.	Reduces impingement forces. Lower Karman trail vortex frequency.

Copyright ASME International
Provided by IHS under license with ASME
No reproduction or networking permitted without license from IHS
Not for Resale

the following:

$$P = K_1 S \quad (4)$$

P = maximum allowable static gage pressure, psi
S = allowable stress for material at operating temperature as given in the ASME Boiler and Pressure Vessel or Piping Codes, psi
K_1 = a stress constant obtained from Table 1.5.

TABLE 1.3 WELL DIMENSIONS, IN IN.

Dimension	Nominal Size of Sensing Element				
	1/4	3/8	9/16	11/16	7/8
A (minimum)	13/16	15/16	1-1/8	1-1/4	1-7/16
B (minimum)	5/8	3/4	15/16	1-1/16	1-1/4
d (minimum)	0.254	0.379	0.566	0.691	0.879
d (maximum)	0.262	0.387	0.575	0.700	0.888

TABLE 1.4 VALUES OF K_f

Well Length L, In.	Nominal Size of Sensing Element				
	1/4	3/8	9/16	11/16	7/8
2-1/2	2.06	2.42	2.97	3.32	3.84
4-1/2	2.07	2.45	3.01	3.39	3.96
7-1/2	2.08	2.46	3.05	3.44	4.03
10-1/2	2.09	2.47	3.06	3.46	4.06
16	2.09	2.47	3.07	3.47	4.08
24	2.09	2.47	3.07	3.48	4.09

17 The maximum length that a thermometer well can be made for a given service is dependent upon both vibratory and steady state stress. The necessity for keeping the frequency ratio at 0.8 or less imposes one limitation on maximum length. The other limitation is one of steady state stress considerations, as given by the following equation:

TABLE 1.5 VALUES OF STRESS CONSTANTS

Stress Constant	Nominal Size of Sensing Element				
	1/4	3/8	9/16	11/16	7/8
K_1	0.412	0.334	0.223	0.202	0.155
K_2	37.5	42.3	46.8	48.7	50.1
K_3	0.116	0.205	0.389	0.548	0.864

$$L_{max} = \frac{K_2}{V}\sqrt{\frac{v(S - K_3 P_0)}{1 + F_M}} \quad (5)$$

where

L_{max} = maximum value of L (as shown in Fig. 1.1) for a given service, in.
V = fluid velocity, fps
v = specific volume of the fluid, cu ft per lb
S = allowable stress for material at operating temperature as given in the ASME Boiler and Pressure Vessel or Piping Codes, psi
P_0 = static operating gage pressure, psi
F_M = magnification factor as computed from Eq. (3)
K_2, K_3 = stress constants obtained from Table 1.5

18 Example Problem. Assume that it has been determined on the basis of thermometry considerations that a 4½ in. well is required to accommodate a 9/16 in. sensing element to measure the temperature of superheated steam at 2400 psig, 1050°F, flowing at a velocity of 300 fps. If the well material is to be Type 321 stainless steel, will the well be safe?

Solution:

Step 1—Obtain the necessary data as follows:

Symbol	Item	Value	Reference
v	Specific volume of superheated steam	0.3353 cu ft per lb	[3]
$E_{70\,F}$	Modulus of elasticity at 70°F	28.0×10^6 psi	[4]
γ	Specific weight of metal at 70°F	0.290 lb per cu in.	[4]
S	Allowable stress at 1050°F	13,100 psi	[5]
	Ratio of frequency at 1050 to 70°F	0.918	[6]

Step 2—Frequency Calculations

(*a*) Natural frequency (Eq. (1))

Copyright ASME International
Provided by IHS under license with ASME
No reproduction or networking permitted without license from IHS
Not for Resale

$$f_{n\,(70\ ^\circ F)} = \frac{3.01}{4.5^2}\sqrt{\frac{28 \times 10^6}{0.290}} = 1461 \text{ cps}$$

$$f_n = 0.918 \times 1461 = 1341 \text{ cps}$$

(b) Strouhal frequency (Eq. (2))

$$f_w = \frac{2.64 \times 300}{15/16} = 845 \text{ cps}$$

(c) Magnification factor (Eq. (3))

$$r = f_w/f_n = 845/1341 = 0.630 < 0.8 \ (satisfactory)$$

$$F_M = \frac{(0.630)^2}{1 - (0.630)^2} = 0.658$$

Step 3—Stress Calculation

(a) Maximum pressure (Eq. (4))

$$P = 0.223 \times 13{,}100 = 2921 > 2400 \ (satisfactory)$$

(b) Maximum stress length (Eq. (5))

$$L_{max} = \frac{46.8}{300}\sqrt{\frac{0.3353\ (13{,}100 - 0.389 \times 2400)}{1 + 0.658}}$$

$$= 7.7 \text{ in.} > 4\tfrac{1}{2} \text{ in.} \ (satisfactory)$$

Result: All the requirements for frequency and stress have been met, therefore, this thermometer well is satisfactory for the intended service.

19 Thermometer wells as shown in Fig. 1-1, are expected to satisfy 95 percent of the present well problems. Increased temperature-pressure ratings of central stations now await advances in metallurgy. Such materials when available will also increase the ratings of the thermometer wells. For services where these thermometer wells are not now suitable, the use of a fixed beam type of well described in Ref. [7] is recommended. Interest now centers on velocities of 300 fps or less. Higher velocities give rise to considerable differences between stagnation and static temperatures. For velocities in excess of 300 fps the fixed beam type of well is recommended.

Other Accessories

20 When it is necessary to place a temperature sensing element in a gas or vapor at a location where it can "see" surfaces at materially higher or lower temperatures than that of the medium in which it is immersed, accessories may be used to minimize errors arising from radiation under such conditions. Several schemes may be employed as follows:

(a) By surrounding the sensing junction with one or more coaxial tubes mounted in the direction of gas flow [8, 9, 10]. This arrangement screens the sensor from radiation exchange with the surrounding surfaces.

(b) By increasing the convective heat transfer rate from the gas to the sensor thereby minimizing the effect of radiation losses. This may be accomplished by using a suction or aspirating type pyrometer [11, 12]. A special case of this principle is employed in the sonic-flow thermocouple pyrometer in which the gas flow over the sensor is maintained at sonic velocity [13].

(c) By covering the sensing junction with a low emissivity radiation shield mounted directly onto the junction [14]. This arrangement has been found effective in minimizing radiation losses where space limitations prevent the use of the coaxial-type screens.

For a more complete discussion of this subject, see Ref. [15].

Copyright ASME International
Provided by IHS under license with ASME
No reproduction or networking permitted without license from IHS
Not for Resale

INSTALLATION

21 Details of installation applying specifically to a given type of instrument are treated in a subsequent chapter for the particular instrument. Certain general considerations are given here.

22 Where the sensing element is immersed in the substance whose temperature is to be measured, it should be so located as to acquire and maintain as nearly as possible the temperature of the substance. If the possibility of stratification, stagnation, or gradients exists, care must be exercised to choose a sufficient number of elements and to locate and install them properly, according to the requirements of the measurement to be made.

23 Wherever possible, methods which do not involve the use of thermometer wells between medium and instrument shall be used. Unfortunately, it is not always possible to do this. Thermometer wells shall be designed in accord with the principles outlined in Pars. 8 to 19. In addition, the following precautions must be observed, particularly when the temperature being measured differs by more than 50°F from that of the surroundings:

(a) The part of the well projecting beyond or outside the vessel must be as small as possible so as to eliminate heat transfer to or from surroundings.

(b) The exposed parts of the well shall be covered with a suitable thermal insulating material. The vessel wall shall be insulated for some distance from the thermometer well if the vessel is not already insulated, and if such insulation will not materially affect the temperature of the medium to be measured.

(c) The sensing element should be in intimate thermal contact with the well. This may be accomplished by direct contact, as with thermocouples, by heat-transfer filling media or metallic sleeves for other thermometers that may be inserted in wells.

24 In the measurement of surface temperature the extent of insertion of the sensing element will obviously be limited by the thickness of the material whose temperature is being measured. Thermocouples are generally used for this purpose. To aid in bringing the measuring junction to the temperature of the material surface, the junction should be peened into position and a portion of the thermocouple leads should be in intimate contact with the material surface. In the case of surface temperature measurements on piping, the leads should be wound around the pipe for at least four turns adjacent to the junction.

SOURCES OF ERROR

Introduction

25 Any temperature sensing element indicates its own temperature and, even under steady-state conditions, the temperature of the element may not be that of the fluid or solid with which it is in contact. In general, temperature errors are more pronounced when dealing with the gaseous phase as compared with the liquid or solid phase. However, errors are not necessarily insignificant when measuring temperatures in liquids or solids. If a fluid is at rest or moving with relatively low velocity, the temperature indicated by the temperature sensing element for steady-state conditions is a result of a balance of convective heat transfer between the element and the fluid, and heat transfer by conduction and radiation between the element and its surroundings. For a gas stream moving at high velocity (above Mach 0.3), however, the temperature determination becomes more difficult because of the aerodynamic heating effect. The following paragraphs describe typical sources of error and means by which errors can be determined or reduced.

Conduction Error

26 Conduction error, commonly called immersion error, may be present whenever a temperature gradient exists in the temperature sensor (e.g., in the wires of a thermocouple between its measuring junction and point of attachment). Recommended installation practice for thermometer wells is described in Par. 23 which, if followed, will reduce the conduction error. The following relation may be used with good accuracy for determining the extent of the conduction error *if this is the only error of significance:*

$$T_{sg} = T_i - \left[\frac{T_w - T_{sg}}{\text{Cosh}\,(mL)}\right] \qquad (6) \qquad [16]$$

where

T_{sg} = static temperature of the gas, deg F

T_i = temperature indicated by temperature sensor, deg F

Copyright ASME International
Provided by IHS under license with ASME
No reproduction or networking permitted without license from IHS
Not for Resale

T_w = temperature at point of attachment (e.g. vessel wall), deg F

L = immersion length of temperature sensor, ft

m = $(hp/ka)^{1/2}$, ft^{-1}

h = convective coefficient of heat transfer, Btu/hr ft² deg F

p = perimeter of temperature sensor, ft

k = thermal conductivity of temperature sensor, Btu/hr ft deg F

a = conduction cross-sectional area of temperature sensor, ft²

Since the hyperbolic cosine of the mL product increases as the product itself increases, it follows that the larger mL becomes the closer the indicated temperature, T_i, approaches the static temperature of the gas, T_{sg}, (i.e., the conduction error is reduced). As a consequence, any means of increasing mL product will result in a decreased conduction error.

Radiation Error

27 If the temperature sensor can "see" surfaces which are at either higher or lower temperatures than the sensor itself, net radiant interchange will take place. The sensor will experience a net gain or loss of heat by radiation and, therefore, a significant error in temperature measurement may result. The net radiant interchange may be determined by means of the following relation:

$$q_r = 0.1714\ F_\epsilon F_A A_s \left[\left(\frac{T_i}{100}\right)^4 - \left(\frac{T_r}{100}\right)^4\right] \quad (7) \quad [17]$$

where

q_r = net rate of radiant interchange, Btu/hr

F_ϵ = effective emissivity, dimensionless

F_A = configuration factor, dimensionless

A_s = surface area of temperature sensor, ft²

T_i = temperature indicated by temperature sensor, R

T_r = mean temperature of surrounding surfaces, R

If the surface area of the sensor is small with respect to the area of the surrounding surfaces, as is the usual case, the effective emissivity (F_ϵ) is equal to the normal total emissivity (ϵ_s) of the sensor. Also, since all the energy radiated by the sensor is intercepted by the surrounding surfaces, the configuration factor (F_A) from the sensor to its surroundings is equal to unity. As a result, Eq. (7) may be simplified as follows:

$$q_r = 0.1714\ \epsilon_s A_s \left[\left(\frac{T_i}{100}\right)^4 - \left(\frac{T_r}{100}\right)^4\right] \quad (8)$$

Heat Transfer at Low Velocity

28 Consider the case of a temperature sensor exposed to a low velocity (i.e., no aerodynamic heating) gas stream with the sensor experiencing both radiation and conduction effects. For the steady-state condition between the flowing gas and the sensor, heat transfer by convection must equal the rate of heat transfer by radiation and conduction.

This equilibrium condition may be written as follows:

$$hA_s\,(T_{sg} - T_i) = 0.1714\ \epsilon_s A_s \left[\left(\frac{T_i}{100}\right)^4 - \left(\frac{T_r}{100}\right)^4\right] + ka\frac{(T_i - T_w)}{L} \quad (9) \quad [19]$$

It can be seen from the above expression that as the radiation and conduction effects are reduced, the temperature of the sensor, T_i, will approach the static temperature of the gas, T_{sg}. Means of reducing the radiation effect are described in Par. 20. There is also a more complete discussion of radiation and related factors in Chapter 2, Radiation Thermometers.

Aerodynamic Heating Effect

29 Aerodynamic heating is caused by localized stagnation of the moving gas stream in the immediate vicinity of the temperature sensor. As a result, the temperature as indicated by the sensor tends to be higher than the static temperature of the gas stream. Static temperature is defined as the temperature of the gas stream as indicated by a temperature sensing element moving with the same velocity as the gas and with isentropic conditions existing

*Equations (8), (9) and (12) following, are valid only for the case where there are no radiation absorbing gases present. For the case where absorbing gases such as water vapor or carbon dioxide are present, see Ref. [18].

Copyright ASME International
Provided by IHS under license with ASME
No reproduction or networking permitted without license from IHS
Not for Resale

at the temperature sensing element. In the case where radiation, conduction, and aerodynamic heating occur simultaneously, the temperature indicated by the temperature sensor will be dependent upon the corresponding magnitudes of these three heat transfer effects. If the moving gas stream is brought to rest isentropically at the temperature sensor, the resulting localized temperature of the gas stream is called "total," or "stagnation," temperature, T_t. The total temperature would be higher than the static temperature because of the conversion of kinetic energy to internal energy. These two temperatures are related in the following manner:

$$T_t - T_{sg} = V^2/2Jg_c c_p \qquad (10) \qquad [20]$$

where

V = gas velocity, ft/sec

J = mechanical equivalent of heat = 778 ft lb_f/Btu

g_c = dimensional constant = 32.1740 lb_m ft/lb_f sec^2

c_p = specific heat at constant pressure, Btu/lb_m deg F

30 Whenever the kinetic energy of the gas stream is reduced, the conversion of kinetic energy to internal energy is manifested by a localized rise in gas temperature at the temperature sensor. This temperature rise results in heat transfer from the localized region to the surrounding gas stream, as well as to the sensor. If the sensor experiences no heat transfer, an adiabatic condition, the temperature which the sensor then assumes is defined as the "adiabatic temperature," T_a. For convenience, the ability of a temperature sensor to "recover" the converted kinetic energy of the gas stream is defined in terms of a "recovery factor," r, as follows:

$$r = (T_a - T_{sg}) / (T_t - T_{sg}) \qquad (11) \qquad [20]$$

The rise in temperature, $(T_t - T_{sg})$, of the stagnated portion of the gas stream during isentropic slowing of the gas stream may be calculated by means of Eq. (10). The recovery factor is primarily dependent on geometric configuration, orientation, and Mach number. For a more complete discussion of this subject see Refs. [21, 22, 23, 26].

Heat Transfer at High Velocity

31 In the case where aerodynamic heating occurs and the temperature sensor has conduction and radiation effects, the temperature, T_i, indicated by the sensor may differ from the adiabatic temperature. In other words, all four temperatures T_i, T_{sg}, T_t and T_a generally have different values. For this case, the applicable steady-state relation is as follows:

$$h_e A_s (T_a - T_w) = 0.1714\, \epsilon_s A_s \left[\left(\frac{T_i}{100}\right)^4 - \left(\frac{T_r}{100}\right)^4\right] + ka \frac{(T_i - T_w)^*}{L} \qquad (12) \qquad [20]$$

where

h_e = effective convective heat transfer coefficient, Btu/hr ft² °F.

The effective coefficient, h_e, which is primarily dependent upon flow regime, geometric configuration, and orientation may be calculated through use of appropriate convection correlations. Further information may be obtained from Refs. [22, 24]. When calculating the temperature error for the above case, the adiabatic temperature, being the unknown quantity, is determined through use of Eq. (12). Equations (10) and (11) may then be used for determining the static temperature of the gas.

32 At the relatively low velocity of 300 ft/sec the difference between the total and static temperatures is only 7 deg F, but at a velocity of 1100ft/sec, approximately Mach 1 at 40°F, the difference in temperature increases to 40 deg F. At a velocity of 2200ft/sec, approximately Mach 2 at 40°F, the difference is 400 deg F, thus emphasizing the significance of aerodynamic heating at high velocities.

33 The standardized Performance Test Code wells dimensioned in Table 1.3 are recommended for use with velocities of 300ft/sec or less. A recovery factor for air of 0.65 should be used for these wells at this velocity or lower. For higher velocities, a fixed beam type of well or temperature measuring devices designed expressly for high velocity flow, such as stagnation thermocouple thermometers, should be used, [7, 8, 21].

Gradient Error

34 In temperature measurements in a system where there are velocity, density, or temperature gradients, such gradients will be taken into account if the temperature measurement is used to determine the

* See footnote under Eq. 8.

Copyright ASME International
Provided by IHS under license with ASME
No reproduction or networking permitted without license from IHS
Not for Resale

energy of the medium. In such cases the value of the bulk temperature is desired, which would be the temperature realized if the flow could be interrupted and the material thoroughly mixed without gain or loss in energy (i.e., an adiabatic situation). In practice the desired result can be obtained by making sets of measurements at a sufficient number of points to permit numerical integration.

35 A number of measuring stations and sensing elements shall be selected depending on the relative magnitude of the gradients and the accuracy desired. For each station, the local temperature, density, velocity, and flow area shall be evaluated. The value of the bulk temperature is related to the local quantities though the following equation:

$$T_b\,(C_p)_b = \frac{\Sigma\,(C_p\ T\ VA)}{\Sigma\,(\rho\ VA)} \qquad (13)$$

where

T_b = bulk stagnation temperature, °F

$(C_p)_b$ = specific heat at constant pressure, evaluated at the bulk temperature, Btu/lbm °F

C_p = specific heat at constant pressure, evaluated at the local stagnation temperature, Btu/lbm °F

T = local stagnation temperature, °F.

ρ = local stream density, lbm/ft^3

V = local stream velocity, ft/sec

A = local area represented by measuring station, ft^2

Dynamic Error

36 It cannot be too strongly emphasized that Performance Test Code measurements are to be taken under steady-state conditions. However, failure of a temperature sensor to indicate a change in temperature of the medium being measured may not in itself be positive proof that no change has taken place. The sensor and its accessory measuring equipment may be so slow in responding to a change that it may serve to obscure the actual conditions. It is impossible for any temperature sensor to instantaneously undergo a step-change in temperature because of the thermal capacity of the sensor itself. A finite time interval is required for the sensor to absorb, or dissipate, heat during a transient. Because of this, the temperature of the sensor, in general, will be out of phase with the temperature of the medium being measured during a transient condition. In addition to being out of phase it will also be of different magnitude.

37 The ability of a temperature sensing element to respond to a change in temperature is typically given in terms of its "time constant." This is the time required for the element to change in temperature an amount equal to 63.2 percent of the imposed step-change. Therefore, a temperature sensing element having a short time constant for a given physical situation will respond more rapidly to a change in temperature than if it had a long time constant. As a result, temperature error due to dynamic response becomes more significant for elements having long time constants. The response of a temperature measurement system depends on the following five major parameters:

(*a*) Ratio of sensor surface area to sensor mass. As the ratio increases, the time constant decreases.

(*b*) Convective heat transfer coefficient. As the heat transfer coefficient increases, the time constant decreases.

(*c*) Thermal conductivity of the sensor material. As the thermal conductivity increases, the time constant decreases.

(*d*) Specific heat of the sensor material. As the specific heat increases, the time constant also increases.

(*e*) Mechanical and electrical characteristics of the accessory measuring equipment.

Further information is given in Refs. [23, 24, 25], and specific features are considered in the individual chapters dealing with various temperature measuring instruments.

CONCLUSIONS

38 In the measurement of temperature it is important that the instrument best suited to the particular problem be selected. The choice will be governed by required accuracy, accessibility to the material to be measured, types of available equipment, and economic factors. When the proper selection of equipment has been made, calibration shall be conducted as described in Chapter 9. However, temperature test data obtained from calibrated instruments should not be taken for granted as necessarily being accurate. The possibility of tempera-

Copyright ASME International
Provided by IHS under license with ASME
No reproduction or networking permitted without license from IHS
Not for Resale

ture errors occurring as a result of conduction, radiation, aerodynamic heating, and dynamic response should be investigated and, if significant, evaluated.

REFERENCES

39 Throughout the text Reference numbers are enclosed in brackets, thus [1].

[1] "SAMA Standard," PMC 17, 1963.

[2] "Power Test Code Thermometer Wells," J. W. Murdock, *J. of Engrg. for Power, Trans. ASME*, vol. 81, 1959.

[3] "1967 ASME Steam Tables."

[4] "Metal Properties," ed. by S. L. Hoyt; "ASME Handbook," McGraw-Hill, New York, first edition, p. 62, 1954.

[5] "Unfired Pressure Vessels," Section VIII, ASME Boiler and Pressure Vessel Code, 1968.

[6] "American Standard Code for Pressure Piping," ASA B31.1-1955, pp. 93-94, 1955.

[7] "Measurement of Temperature in High Velocity Steam," J. W. Murdock and E. F. Fiock, *Trans. ASME*, vol. 72, pp. 1155-1161, 1950.

[8] "Measurement of High Temperatures in High Velocity Gas Streams," W. J. King, *Trans. ASME*, vol. 65, p. 421, 1943.

[9] "Determination of the Thermal Correction for a Single-Shielded Thermocouple," W. M. Rohsenow and J. C. Hunsaker, *Trans. ASME*, vol. 69, p. 699, 1947.

[10] "Multiple-Shielded High Temperature Probes," E. M. Moffatt, *Trans. SAE*, vol. 6, p. 567, 1952.

[11] "The Design of Suction Pyrometers," T. Land and R. Barter, *Trans. Soc. of Instrument Technology*, vol. 6, No. 3, p. 112, 1954.

[12] "The Measurement of Gas Temperature by Immersion-Type Instruments," E. F. Fiock and A. I. Dahl, *Jour. Amer. Rocket Society*, vol. 23, p. 155, 1953.

[13] "A Sonic-Flow Pyrometer for Measuring Gas Temperatures," G. T. Lalos, *Jour. Res. NBS*, vol. 47, p. 179, 1951.

[14] "Shielded Thermocouples for Gas Turbines," E. F. Fiock and A. I. Dahl, *Trans. ASME*, vol. 71, p. 1153, 1949.

[15] "Gas Temperature Measurement and the High Velocity Thermocouple," H. F. Mullikin; "Temperature, Its Measurement and Control in Science and Industry," Reinhold, New York, pp. 175-802, 1941.

[16] "Introduction to Heat and Mass Transfer," E. R. G Eckert and J. F. Gross, McGraw-Hill, New York, pp. 34-36, 1963.

[17] "Introduction to Heat Transfer," A. I. Brown and S. V. Marco, McGraw-Hill, New York, third edition, p. 63, 1958.

[18] "Heat, Mass, and Momentum Transfer," W. M. Rohsenow and H. Y. Choi, Prentice-Hall, Englewood Cliffs, N. J., first edition, second printing, 1961.

[19] "Heat Transmission," W. H. McAdams, McGraw-Hill, New York, third edition, p. 261, 1954.

[20] "Determine the Static and Total Temperatures of a High Temperature, High Velocity Gas Stream," K. W. Woodfield and R. E. Bloomfield, *General Motors Engineering Journal*, vol. 5, nos. 3 and 4, 1958.

[21] "Temperature Measurement in Moving Fluids," R. P. Benedict, ASME Paper 59-A-257, 1959.

[22] "Steady-State Thermal Analysis of a Thermometer Well," R. P. Benedict and J. W. Murdock, *Trans. ASME, J. of Engrg. for Power*, July, 1963, p. 235.

[23] "Recovery and Time-Response Characteristics of Six Thermocouple Probes in Subsonic and Supersonic Flow," T. M. Stickney, National Advisory Committee on Aeronautics Technical Note 3455, Lewis Flight Propulsion Laboratory, Cleveland, Ohio, July, 1955.

[24] "Experimental Determination of Time Constants and Nusselt Numbers for Bare-Wire Thermocouples in High Velocity Air Streams and Analytic Approximation of Conduction and Radiation Errors," M. D. Scadron and Warshawsky, National Advisory Committee for Aeronautics, Technical Note 2599, 1952.

[25] "The Dynamic Response of Industrial Thermometers in Wells," T. C. Linahan, *Trans. ASME*, vol. 78, pp. 759-763, 1956.

[26] "Design of Thermometer Pockets for Steam Mains," J. E. Roughton, The Institution of Mechanical Engineers, Procedings 1965-66, vol. 180, part 1, no. 39.

[27] "Manual on the Use of Thermocouples in Temperature Measurement," ASTM STP 470.

Copyright ASME International
Provided by IHS under license with ASME
No reproduction or networking permitted without license from IHS
Not for Resale

CHAPTER 2, RADIATION THERMOMETERS

CONTENTS

	Par.
GENERAL:	
Scope	1
Definitions	2
PRINCIPLES OF OPERATION	7
CLASSIFICATION:	
Description	13
Materials of Construction	18
CHARACTERISTICS:	
Range	20
Sensitivity	21
Precision	22
Accuracy	23
Response	24
ACCESSORIES	25
APPLICATION AND INSTALLATION:	
Sources of Error	28
Essential Considerations	34
Treatment of Data	35
ADVANTAGES AND DISADVANTAGES:	
Advantages	36
Disadvantages	37

GENERAL

Scope

1 The purpose of this chapter is to present information which will guide the user in the selection, installation, and use of radiation thermometers.

Definitions

2 A Radiation Thermometer consists of an *optical* system, used to intercept and concentrate a definite portion of the energy *radiated* from a body whose temperature is being measured; a temperature sensitive element, usually a *thermocouple* or a *thermopile*; and a measuring device, usually an *emf* measuring instrument.

3 A total radiation thermometer is one which utilizes as an index of the temperature of a body *all* the energy per unit area per unit time radiated by the body.

4 A selective radiation thermometer is one which utilizes as an index of the temperature of a body the energy from only a narrow *wavelength* band or bands.

5 A blackbody is one that absorbs all radiation incident upon it, *reflecting* or *transmitting* none.

6 Emissivity is the ratio of the radiant energy emitted per unit time and per unit area by a body, to that emitted by a blackbody at the same temperature. *Total emissivity* refers to radiation of all wavelengths, and monochromatic or *spectral emissivity* refers to radiation of a particular wavelength.

PRINCIPLES OF OPERATION

7 The operation of a radiation thermometer depends on the phenomenon that a body at elevated temperature emits radiation, the intensity of which bears a definite relation to the temperature of the body. The temperature of a body may be determined from a measurement of the intensity of the radiation emitted. This measurement may involve the radiation of all wavelengths emitted, or the radiation in a restricted portion or portions of the spectrum. However, in general, the intensity of radiation depends not only on the temperature of the source, but also on the particular material constituting the source. Thus, glowing carbon appears to the eye approximately three times as bright as glowing platinum when both are at the same temperature. This is technically expressed by the statement that the emissive power or emissivity of carbon is approximately three times that of platinum. A material having the highest theoretically possible emissivity is known as a blackbody radiator, or by a single term "blackbody." By definition, the emissivity of a blackbody is unity. All materials have an emissivity less than unity. A blackbody is experimen-

Copyright ASME International
Provided by IHS under license with ASME
No reproduction or networking permitted without license from IHS
Not for Resale

tally realized by uniformly heating a hollow enclosure and observing the radiation from a small opening in its wall. The intensity of the radiation emitted from this opening depends only on the temperature of the walls, and not on the material of which the walls are constructed.

8 The Stefan-Boltzmann law expresses the total energy radiated by a blackbody.

$$W_b = \sigma T^4$$

where

W_b = total energy radiated per unit time, by a blackbody of unit area

σ = Stefan-Boltzmann constant

T = absolute temperature.

9 Planck's radiation law expresses the distribution of energy in the spectrum of blackbody radiation.

$$W_b = \frac{C_1 \lambda^{-5}}{e^{C_2/\lambda T} - 1}$$

where

W_b = radiant energy per unit time, per unit of wave length interval, by a blackbody of unit area

C_1, C_2 = constants in the Planck radiation law

λ = wavelength of radiant energy

e = base of natural or Napierian logarithms.

10 As a consequence of the Stefan-Boltzmann law, it is possible to measure the temperature of a source by measuring the intensity of the radiation that it emits. This measurement is accomplished by focusing energy radiated from a source at a uniform temperature, on an absorbing area, the receiver, which is heated by the incident radiation absorbed by it. The temperature of this receiver rises until its rate of heat loss to its surroundings by conduction, convection, and radiation is equal to its rate of absorption of energy from the source. In most radiation thermometers the rate of heat loss from the receiver is such that equilibrium is reached before its temperature is much above that of its surroundings, even when the source is brightly incandescent.

11 Newton's Law of Cooling states "The rate of cooling of a body under given conditions is proportional to the temperature difference between the body and its surroundings." This law is applicable to radiation thermometry in that any change in the temperature of the source results in a change in the intensity of its radiation and there is a resultant change in the temperature of the receiver, but a much smaller one. To restore equilibrium when the temperature of the source increases from T_1 to T_2 in absolute temperature, the increase in temperature of the receiver should be proportional to $T_2^4 - T_1^4$.

12 The receiver must be sensitive to small changes in temperature. It is blackened for maximum absorption of energy. The absorbed energy is transduced to a measuring instrument as an emf. This emf is a function of the difference between the temperature of the receiver and its surroundings.

CLASSIFICATION

Description

13 Radiation pyrometers have taken many forms, partly as a result of the preferences of the various designers, and partly because of the diversity of the uses to which the thermometers were to be adapted. At least theoretically, rate of radiation of energy may be used as a measure of temperature from the region of absolute zero up to the highest temperatures found in the sun and stars. A single measuring instrument is not capable of making measurements throughout this range because of the varying amounts of energy available, the varying degrees of absorption of the emitted wavelength by the media which transmit or reflect the radiation, and the characteristics of the receiver itself.

14 The most conspicuous and fundamental classification of radiation thermometers is that based on their means of collecting the radiation and focusing it on the receiver. There are three types in use—the single mirror, the double mirror, and the lens.

15 Single Mirror Type. In the single mirror type, radiation from the source enters the optical system through the aperture in the "front diaphragm." It is reflected from a concave mirror at the other end of an enclosing tube and is focused on the receiver of

Copyright ASME International
Provided by IHS under license with ASME
No reproduction or networking permitted without license from IHS
Not for Resale

the temperature sensitive element which is placed between the diaphragm and the mirror. See Fig. 2.1.

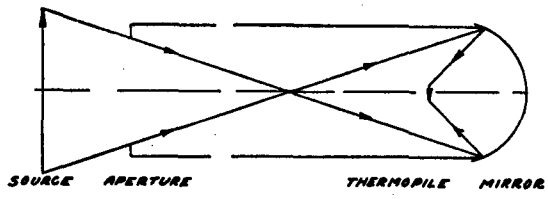

FIG. 2.1 SINGLE MIRROR RADIATION THERMOMETER

16 Double Mirror Type. In this radiation thermometer, radiation enters the instrument through a window, and is reflected by a concave mirror which forms an image of the source on a diaphragm in which there is a small aperture. The image of the portion of the source to be measured is made to cover the aperture and the radiation passing through is focused by a second concave mirror on the receiver, where an image of the aperture is formed. See Fig. 2.2.

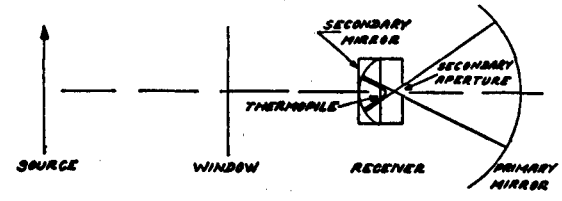

FIG. 2.2 DOUBLE MIRROR RADIATION THERMOMETER

17 Lens Type. A lens is used in this type of radiation thermometer to form an image of the portion of the source to be sighted on which covers an aperture in a diaphragm closely in front of the receiver, the aperture being very slightly larger in diameter than the receiver. See Fig. 2.3.

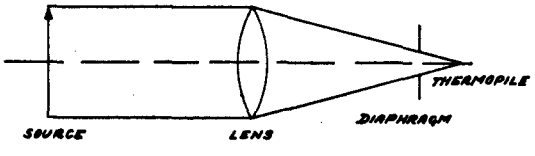

FIG. 2.3 LENS TYPE RADIATION THERMOMETER

Materials of Construction

18 The window and lens materials used in radiation thermometers are usually determined by the range over which it is desired to operate. Mica or Calcium Fluoride is usually used for low-temperature applications, quartz glass for medium-range applications, and or Pyrex for high-range applications. All of these materials absorb radiation in varying amounts.

CHARACTERISTICS

19 The radiation thermometer is generally designated as a *total radiation* thermometer. It occupies a position in the temperature measuring field overlapping and extending beyond that of the thermocouples. It is not recognized as a means of reproducing any part of the International Practical Temperature Scale. The relationship between output emf and the temperature of the body under observation is dependent upon the design and materials of construction of the thermometer. This relationship cannot be expressed by a general formula, such as those used for interpolations and extrapolations with the resistance thermometer, the thermocouple, or the optical pyrometer. Therefore, the radiation thermometer cannot be classified as a primary laboratory instrument, but rather as an industrial instrument, which is empirically calibrated by determining its emf for a number of temperatures in its range and drawing a smooth curve through the points determined. This curve is not the same for all types of radiation thermometers, although for a given type the curves will be similar. The temperature-emf relationship for each thermometer is furnished by the instrument manufacturer.

20 Range. The practical useful range of the radiation thermometer extends from ambient to 7500°F although it is not possible to use one thermometer to cover this entire span.

21 Sensivity. Because radiation thermometry is based on the Stefan-Boltzmann fourth power law, the sensitivity at the low end of each range is very poor; however, over the upper third of each range the sensitivity is excellent.

22 Precision. If properly designed and constructed, the radiation thermometer will indicate the same temperature under the same conditions. Absolute temperatures can be determined if the emissivity of the source is known and corrections applied for the absorption of the media through which the radiation thermometer sights as well as for the absorption of the lens or window of the pyrometer itself.

Copyright ASME International
Provided by IHS under license with ASME
No reproduction or networking permitted without license from IHS
Not for Resale

23 Accuracy. Accuracy of measurement is dependent upon the same factors noted in Par. 21 and in addition to the accuracy of calibration of the thermometer. To attain the utmost in accuracy, the radiation thermometer should be certified by NBS over the range in which it will be used.

24 Response. Radiation thermometers are available having 99 percent response times of less than one second, and up to 30 sec when the receiver is lagged to reduce fluctuations that might be caused by flame radiations or reflections. Those most generally used have the lower response times.

ACCESSORIES

25 Potentiometric recorders are generally used in connection with radiation thermometers. They differ from those used with thermocouples in that reference junction compensation is not generally provided. As it is required for Performance Test Code purposes to make adjustment for emissivities of less than one, there are instruments available that provide this adjustment in the potentiometer circuit so that a direct reading of temperature can be made which includes the proper emissivity correction.

26 A schematic circuit used in radiation thermometer potentiometric recorders is shown in Fig. 2.4. A branched circuit type potentiometer is used, in which the ratio of the currents in the two branches is dependent upon the position of the contact on the slide-wire S_1. Each adjustment of S_1 requires an adjustment of rheostat H to keep the total current constant at the value required to make the drop of potential through the standardizing resister F equal to the emf of standard cell K. The scale of slide-wire S_1 is graduated in terms of drop potential through end coil A and slide-wire S_1 with its contact set at the highest position. Slide-wire S_1 provides means for adjusting the drop in potential through the AS branch to any set of values depending on the output of the radiation pyrometer. A and E are selected to provide the proper emf at the low end of the range.

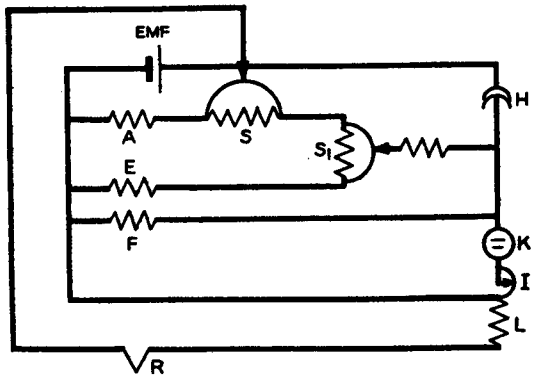

FIG. 2.4 POTENTIOMETER CIRCUIT

27 Accessories include mounting brackets, sighting or target tubes with supporting flanges, nozzles for directing air or a nonabsorbing gas in the target or sighting tubes, and cooling jackets (either air or water).

APPLICATION AND INSTALLATION

Sources of Error

28 The radiation thermometer must be used with due precautions to minimize the sources of error. Some of these sources of error are beyond the control of the user of the instrument, while others can be minimized by attention to details of installation and use.

29 Errors due to uncertain or variable emissivity of the object under observation are inevitably present when sighting on a nonblackbody. It is only when sighting into a closed end tube or other deep cavity in a heated object that emissivity errors may be neglected.

30 Absorption of radiation by carbon dioxide, water vapor, or other invisible gases which have absorption bands in the infrared results in errors. These are apt to be overlooked since the gas or vapor is invisible to the eye. Smoke and fumes are less likely to be disregarded because they are visible, but are no more serious as a source of error. Closed-end tubes may fill with gas or fumes, giving erroneous temperature readings. It is sometimes necessary to purge closed-end tubes continuously with a gentle stream of air to remove absorbing gases. When sighting on a hot body in a furnace gases absorb some of the radiation. If the gases are hotter than the surface sighted on, they radiate into the radiation thermometer, resulting in too high a reading. To avoid this error, an open-end tube may be extended through the furnace wall, nearly to the hot surface, and a gentle stream of air or an inert, nonabsorbing gas may be passed through the tube.

Copyright ASME International
Provided by IHS under license with ASME
No reproduction or networking permitted without license from IHS
Not for Resale

31 It is sometimes desired to measure the temperature of a body inside a furnace which is sealed to maintain an atmosphere of hydrogen or other gas. Windows provided for temperature measurements introduce large errors, whether they are made of glass or quartz. Such errors must be determined experimentally if possible and corrected. Closely related to this type of error is the error caused by deposits of dirt or foreign material on the windows, lenses, or mirrors of the radiation thermometer. This error can be eliminated by periodic cleaning.

32 Errors caused by fluctuations in ambient temperature are sometimes encountered. Most manufacturers provide ambient temperature compensation built into the radiation thermometer which conpensates for these fluctuations to within stated limits.

33 When sighting into a closed-end tube, it is important that the bottom of the tube is focused on the diaphragm of the radiation thermometer, and that its image is centered on the aperture in the diaphragm. Otherwise the temperature reading may be affected by variations in temperature along the walls of the tube.

Essential Considerations

34 An examination of the site where the temperature measurement is to be made will determine the focusing distance required. Manufacturers' literature or representatives should aid in determining the desired components.

Treatment of Data

35 The observed temperature readings should be corrected by adding corrections for emissivity, absorption, and calibration. Corrections at other than calibration temperatures should be determined by linear interpolation.

ADVANTAGES AND DISADVANTAGES

36 **Advantages.** In the range of the thermocouples, the radiation thermometer has the following advantages:

(*a*) They are not subject to deterioration by furnace atmosphere and high temperatures.
(*b*) There is no contact with hot body required, making it possible to measure the temperature of moving objects.
(*c*) They can be used for measurement of surface temperatures.
(*d*) They can be used for measurement of high temperatures.
(*e*) They can be so located as not to be subject to vibration or shock.
(*f*) They can be used where fast response and long, useful life are required.

In the range of the optical pyrometer, the radiation thermometer has the following advantages:

(*a*) Recording and/or controlling of temperatures is obtainable.
(*b*) The personal element does not enter into the measurement.
(*c*) Lower temperatures can be measured.

37 **Disadvantages.** In the range of the optical pyrometer or thermocouple thermometer, the disadvantages of the radiation thermometer are:

(*a*) It has a higher first cost.
(*b*) When sighting from a distance, large sources are required.
(*c*) In general, the accuracy is lower.

Copyright ASME International
Provided by IHS under license with ASME
No reproduction or networking permitted without license from IHS
Not for Resale

CHAPTER 3, THERMOCOUPLE THERMOMETERS

CONTENTS

Section A, Thermocouples

	Par.
GENERAL:	
Scope	1
Definitions	2
PRINCIPLES OF OPERATION	6
CLASSIFICATION:	
Description	7
Materials of Construction	21
CHARACTERISTICS:	
Range and Accuracy	25
Sensitivity	26
Precision	27
Response	28
ACCESSORIES	29
APPLICATION AND INSTALLATION:	
Sources of Error	31
Essential Considerations	34
Treatment of Data	40
ADVANTAGES AND DISADVANTAGES:	
Advantages	41
Disadvantages	42
REFERENCES	43

Section B, Instrumentation

GENERAL	1
PRINCIPLES OF OPERATION	7
DESCRIPTION:	
Potentiometer Circuits	9
Reference Junction Compensation	28
Automatic Null-Balancing Mechanism	43
Types of Indicating Potentiometers	51
Reference Junction Apparatus	67

SECTION A, THERMOCOUPLES

GENERAL

Scope

1 The purpose of this chapter is to present information which will guide the user in the selection, installation, and use of thermocouple thermometers.

Definitions

2 **A Thermocouple Thermometer** is a temperature measuring system comprising a temperature sensing element called a *thermocouple* which produces an *electromotive force* (emf), a device for sensing emf which includes a printed scale for converting emf to equivalent temperature units, and *electrical conductors* for operatively connecting the two. See Fig. 3.1A.

3 **A Thermocouple** is the temperature sensing element of a thermocouple thermometer comprising two dissimilar electrical conductors called *thermoelements*, electrically insulated from each other except where joined together to form junctions. There are necessarily two junctions to each thermocouple corresponding to the two extremities of the thermoelements. The *measuring junction* is that which is subjected to the temperature to be measured. The *reference junction* is that which is at a known temperature. (Note: For practical reasons, the reference junction is usually formed in two parts, as shown in Fig. 3.1A.)

4 **Connecting Wires** are a pair of electrical conductors which connect the thermocouple to the emf measuring device. These are generally of copper when the reference junctions of the thermocouple are maintained at some fixed temperature such as 32°F (ice point).

5 **Thermocouple Extension Wires** are a pair of wires having such temperature-emf characteristics relative to the thermocouple with which the wires are intended to be used that, when properly connected to the thermocouple, the thermocouple reference junction is in effect extended to the other end of the wires.

Copyright ASME International
Provided by IHS under license with ASME
No reproduction or networking permitted without license from IHS
Not for Resale

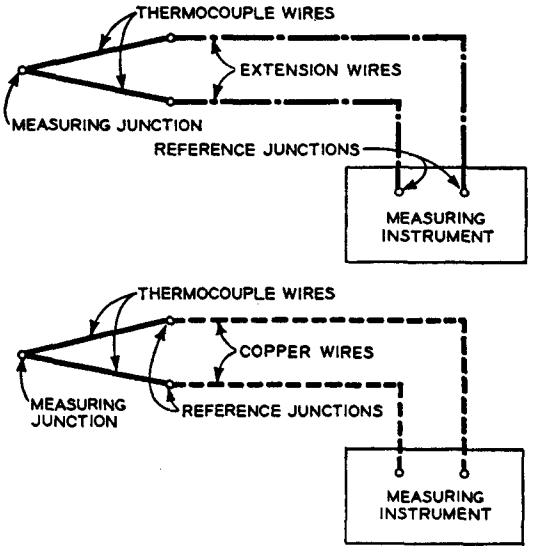

FIG. 3.1A THERMOCOUPLE THERMOMETER SYSTEMS

PRINCIPLES OF OPERATION

6 Seebeck discovered in 1821 that an electric current will flow in a closed circuit of two dissimilar metals when the junctions of the metals are at different temperatures. Two causes contribute to the production of the emf which actuates the current. An emf known as the Peltier emf exists between two different metals placed in contact, the magnitude of which depends upon the temperature and upon the metals used. Also, if a wire of homogeneous material is heated at one end, an emf known as the *Thomson emf* is developed between the hot and cold ends of the wire, the magnitude of which depends upon the metal and upon the differences in temperature of the ends. The total emf acting in a closed circuit of two dissimilar metals is the sum of the Peltier emf at each junction and the Thomson emf over each wire, consideration being given, of course, to the algebraic signs of these four emfs. The total emf acting in such a circuit thus depends upon the temperatures of the two junctions. If the temperature of one junction is fixed at some known value such as that of the room or of the ice point (32°F), the temperature of the other junction can be determined by measuring the emf developed in the circuit. This is the basic principle of thermoelectric thermometry.

CLASSIFICATION

Description

7 Measuring Junction. The method employed for making the junction between the thermoelements has no influence on the emf developed, providing good electrical contact is attained. The most widely used method for making the junction is *autogenous welding*, in which the thermoelements are fused together by a torch or by electrical means without using any other material to form the junction. The noble metals should be welded without using a flux. For torch welding base metals it is advantageous to use a flux to minimize oxidation. Care should be exercised in the application of heat to the ends of the thermoelements to avoid overheating. All traces of flux should be removed after the welding process. Further details on the welding of thermoelements may be found in ISA Recommended Practice RP 1.1-.7, and in the ANSI Temperature Measurement Thermocouples C 96.1.

8 The thermocouple junction may be formed by soldering or brazing with a material that is compatible with the thermoelements at the temperatures to be encountered in service. Care should be taken to prevent the solder or brazing material from running back from the junction. All traces of flux should be removed.

9 The mechanical strength of the junction may be increased by twisting the wires together for a few turns at the junction end. The twist should be omitted whenever the thermocouple is to be used where a temperature gradient exists at the junction. The temperature measured is that at the first point of the electrical contact proceeding from the reference junction to the measuring junction.

10 In measuring the temperature of a metal surface, it is often advantageous to attach the thermoelements separately to the metal. This may be done by spot welding or peening the wires to the metal. The points of attachment should be close enough together that there will be no significant difference in temperature between them.

11 Insulations and Protection Tubes. The thermocouple wires must be electrically insulated at all points other than the measuring junction. Various refractory materials such as porcelain, alumina and magnesia in the form of beads, tubes and powder encased in metallic sheaths serve as means of insulating and supporting the thermoelements. For lower temperature applications, fiberglass, asbestos, rubber, fabrics, enamels, and various plastics are used as thermocouple insulations. The thermocouple, extension, and connecting wires should be maintained dry over their entire length.

Copyright ASME International
Provided by IHS under license with ASME
No reproduction or networking permitted without license from IHS
Not for Resale

12 Although most of the metals and alloys used as thermoelements exhibit a relatively high degree of mechanical stability, the majority of them are subject to change in calibration when exposed to contaminating and corrosive conditions. Protection tubes which are impervious to such conditions are therefore required if high accuracy and long life are required. Platinum versus platinum rhodium thermocouples are particularly susceptible to contamination and should be protected by ceramic tubes which are impervious to gases and vapors at temperatures within the working range. To provide additional mechanical strength, a refractory metal tube is often placed over the ceramic tube.

13 Protecting wells are employed when the thermocouple is used in liquids and gases at high pressure. They are made of metal, and may be turned and drilled from bar stock or built up by welding. They are usually fabricated of carbon steel, stainless steel (18-8) or 14 percent chromium iron. Thermocouple protection tubes for use in molten metals, furnace atmospheres, salt baths and chemical processes must be selected to withstand the particular conditions and hazards prevailing in the installation.

14 In providing protection for the thermocouple, however, one must not lose sight of the fact that a thermocouple can perform its function only when the conditions of heat transfer are such that the measuring junction attains or at least approaches the temperature to be measured.

15 **Reference Junction.** The most satisfactory and easily reproducible method of reference junction control is realized by an ice bath, consisting of an intimate mixture of shaved ice and water. A wide-mouth Dewar jar provided with a cork will serve to maintain the ice bath over several hours. For each junction to be kept at the ice point, a small glass tube, closed at the bottom and flared at the top, is inserted through a hole in the cork. Enough mercury is placed in each tube to fill it approximately ½ in. The tubes are inserted so that the mercury is several inches below the surface of the ice-water mixture. The actual reference junction is made by inserting a thermoelement and a copper wire, each insulated in such a manner that electrical contact between them is made only below the surface of the mercury. The copper connecting wires are extended to the emf measuring instrument.

16 When it is inconvenient to use an ice bath, a thermally insulated block of copper, aluminum or silver, or a stirred liquid bath may be substituted. In such case, the temperature of the reference junction must be measured with an auxiliary instrument and taken into proper account.

17 Frequently some accuracy is sacrificed for convenience by eliminating the constant temperature reference junction in favor of automatic reference junction compensation built into an indicating or recording instrument used to measure the emf developed by the thermocouple. Recently, automatic reference junction controls, external from the emf measuring instrument, have become available. These provide either the ice point temperature or various elevated temperatures, usually within ±0.5°F.

18 **Thermocouple Extension Wires.** Where the highest accuracy is desired, thermocouples should be long enough to connect directly to the instrument or reference junction apparatus. This will eliminate errors which might be introduced by the use of extension wires not having temperature-emf characteristics identical to those of the thermocouple. Where this is not feasible, extension wires from the thermocouple reference temperature may be used. For base-metal thermocouple installations, the extension wires are either the same or nominally the same as the thermocouple materials. Extension wires must have the equivalent emf-temperature relation over the temperature range to be encountered in service.

19 Because of the high cost of platinum and platinim rhodium alloys, substitute materials are generally used as extension wire for thermocouples made from these metals. A specially matched pair of conductors, consisting of a copper wire and a nickel-copper alloy wire, have found general use as extension wires for the platinum vs platinum rhodium thermocouple over the temperature range 32 to 400°F. The copper wire is joined to the platinum rhodium thermoelement and the copper-nickel alloy wire to the platinum thermoelement. These wires do not match the individual thermoelements, but when used together they compensate reasonably well over the range specified above. It is important that the junctions of the extension wire and the thermoelement be at the same temperature.

20 **Switches and Terminal Blocks.** All switches used with thermocouples should be of a rugged construction and designed so that both wires are

Copyright ASME International
Provided by IHS under license with ASME
No reproduction or networking permitted without license from IHS
Not for Resale

switched when switching from one thermocouple to the next, such that thermocouples not in use are entirely disconnected from the measuring instrument. The switches should be located so as not to be subjected to temperature fluctuations due to air currents or radiation from hot sources. Terminal blocks and panels should be protected similarly from rapid or large temperature fluctuations. It is recommended that wherever practical, all connectors and terminal studs and jacks be of thermocouple materials.

Materials of Construction

21 Common thermocouple materials are available for use within the approximate limits of −300 to +3200°F. Of the vast number of possible combinations of metals and alloys, only a limited number are in actual use in thermocouple thermometry. These few have been chosen on the basis of such factors as mechanical and chemical properties, melting point, thermoelectric properties, reproducibility and cost. No single thermocouple meets all requirements, but each possesses characteristics desirable for selected applications. Platinum is the generally accepted standard material to which the thermoelectric characteristics of other materials are referred. The emf-temperature relation of the conventional thermoelements versus platinum are shown in Fig. 3.2A.

22 Noble Metals

(*a*) Platinum-10 percent Rhodium versus Platinum. (Type S) This thermocouple serves as the interplating instrument for defining the International Temperature Scale from 630.74°C (freezing point of antimony) to 1064.43°C and is characterized by a high degree of chemical inertness and stability at high temperatures in oxidizing atmospheres. Both thermoelement materials are ductile and can be drawn into fine wires. The thermocouple is widely used in industrial laboratories as a standard for the calibration of base metal thermocouples and other temperature sensing instruments. Platinum −10 percent-Rhodium versus Platinum thermocouples, as procured from a reputable source, will match the standard reference table to ±0.5 percent of the measured emf.

(*b*) Platinum −13 percent Rhodium versus Platinum. (Type R) This thermocouple is similar in general characteristics to the Platinum − 10 percent Rhodium versus Platinum type. It produces a slightly greater emf for a given temperature.

(*c*) Platinum − 30 percent Rhodium versus Platinum − 6 percent Rhodium. (Type B) This combination of platinum-rhodium alloys is useful to somewhat higher temperatures and shows

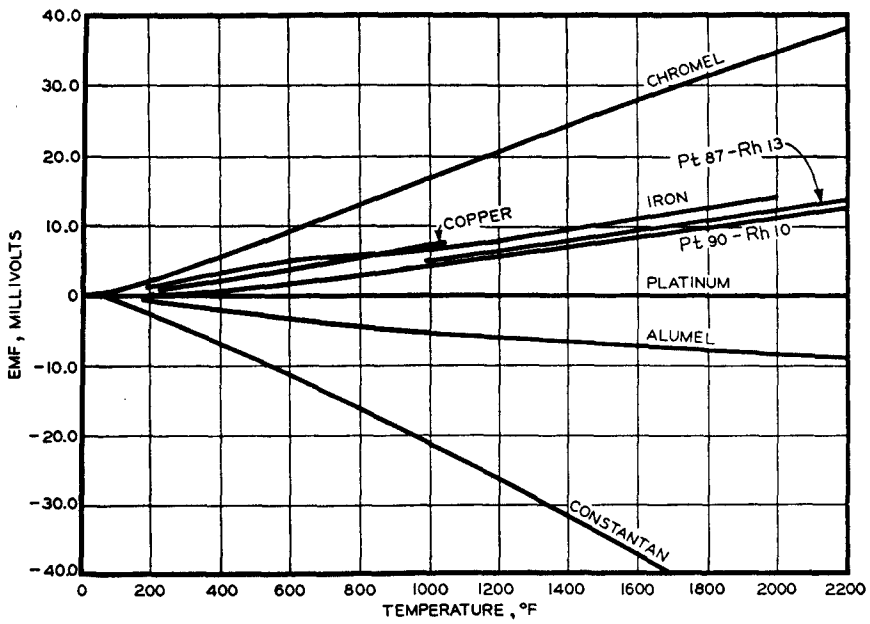

FIG. 3.2A EMFS OF VARIOUS MATERIALS VERSUS PLATINUM

Copyright ASME International
Provided by IHS under license with ASME
No reproduction or networking permitted without license from IHS
Not for Resale

slightly greater mechanical strength than the conventional Platinum versus Platinum Rhodium thermocouples.

23 Base Metals

(*a*) Copper-Constantan. (Type T) Constantan is an alloy of approximately 55 percent Copper, 45 percent Nickel. The copper-constantan thermocouple is widely used in industrial and laboratory applications over the temperature range − 300 to +700°F.

(*b*) Iron-Constantan. (Type J) This thermocouple is probably the most widely used of all thermocouples in industrial thermometry. It is generally limited to the temperature range −200 to + 1400°F but may be used up to 1800°F at a sacrifice of life. For the higher temperatures, wire sizes of number 8 gage or larger are generally employed. For temperatures up to 1400°F, iron-constantan thermocouples show good calibration stability in nonoxidizing atmospheres.

(*c*) Chromel-Alumel. (Type K) Chromel P is an alloy of approximately 90 percent Nickel, 10 percent Chromium. Alumel has a composition of about 94 percent Nickel, 3 percent Manganese, 2 percent Aluminum, 1 percent Silicon. This thermocouple, usable over the temperature range −200 to 2300°F, and higher for short time intervals, is more resistant to oxidation than any other base-metal combination. It must be protected against reducing atmospheres. Alternate oxidizing and reducing atmospheres are particularly destructive. Both thermoelements are mechanically strong and are often directly exposed to the temperature environment.

(*d*) Chromel-Constantan. (Type E) This combination of thermoelements develops the highest thermoelectric output of any of the conventional thermocouples, namely, about 34 μV per deg F at normal ambient temperature and increasing to about 45 μV per deg F at 1000°F. This high output has led to the use of Chromel-Constantan as sensing elements in thermopiles for radiation detection and in differential thermocouple systems. The thermocouple has also found general application for temperature measurements up to about 1400°F. It is characterized by a high degree of calibration stability when used at temperatures not exceeding 1000°F.

24 Special Purpose Metals. Combinations of metals other than those listed above are sometimes used for special purposes. These include chromel versus stainless steel, nickel versus nickel molybdenum, and platinum rhodium versus gold palladium. Each has advantages for particular applications.

CHARACTERISTICS

25 Range and Accuracy. The upper temperature limits for the various thermocouples depend on the wire sizes and the environment in which the thermocouples are used. Table 3.1A lists the recommended upper temperature limits for thermocouples protected from corrosive or contaminating atmospheres. The ranges of applicability and limits of error for thermocouples and extension wires of standard sizes are given in Table 3.2A. The corresponding values of temperature and emf for the various types of thermocouples are given in Table 3.3A. See National Bureau of Standards Monograph 125 for expanded reference tables of these thermocouples, emf versus temperature, and temperature versus emf, deg F and deg C.

26 Sensitivity. The sensitivity of a thermocouple, that is dE/dT, varies somewhat with temperature. The following table lists the average thermoelectric power for the conventional thermocouples.

Thermocouple	Average dE/dT, Microvolts per Deg F for the Range Specified
Copper-Constantan	28.0 (32-650°F)
Iron Constantan	32.0 (32-1400°F)
Chromel-Alumel	23.0 (32-2200°F)
Platinum-10% Rhodium -Platinum	6.3 (1000-2650°F)
Chromel-Constantan	42.0 (32-1400°F)

27 Precision. The precision of measurement attainable with thermocouples depends primarily upon the temperature range and upon the experimental techniques employed. All thermocouples show a gradual drift in calibration with operating service. Small diameter thermoelements (less than 0.010 in. diameter) are particularly susceptible to change in calibration when used near their upper temperature limit.

Copyright ASME International
Provided by IHS under license with ASME
No reproduction or networking permitted without license from IHS
Not for Resale

TABLE 3.1A Recommended Upper Temperature Limits for Protected Thermocouples Upper Temperature Limit for Various Wire Sizes (Awg), DEG C (DEG F)

Thermocouple Type	No. 8 Gage (3.25mm (0.128 in.))	No. 14 Gage (1.63mm (0.064 in.))	No. 20 Gage (0.81mm (0.032 in.))	No. 24 Gage (0.51mm (0.020 in.))	No. 28 Gage (0.33mm (0.013 in.))
T		371 (700)	260 (500)	204 (400)	204 (400)
J	760 (1400)	593 (1100)	482 (900)	371 (700)	371 (700)
E	871 (1600)	649 (1200)	538 (1000)	427 (800)	427 (800)
K	1260 (2300)	1093 (2000)	982 (1800)	871 (1600)	871 (1600)
R & S				1482 (2700)	
B				1705 (3100)	

TABLE 3.2A LIMITS OF ERROR OF THERMOCOUPLES AND EXTENSION WIRES FOR STANDARD WIRE SIZES

Thermocouple Type	Temp. Range, °C	Limits of Error Std.	Special	Extension Wire Type	Temp. Range, °C	Limits of Error Std.	Special
T	−184 to −59	----	±1%				
	−101 to −59	±2%	±1%	TX	−69 to +93	±0.8°C	±0.4°C
	− 59 to +93	±0.8°C	±0.4C				
	+ 93 to + 371	±3/4%	±3/8%				
J	0 to 277	±2.2°C	±1.1C	JX	0 to 204	±2.2°C	±1.1°C
	277 to 760	±3/4%	±3/8%				
E	0 to 316	±1.7°C	----	EX	0 to 204	±1.7°C	----
	316 to 871	±1/2%	----				
K	0 to 277	±2.2°C	±1.1C	KX	0 to 204	±2.2C	----
	277 to 1260	±3/4%	±3/8%				
R & S	0 to 538	±1.4°C	----	----	----	----	----
	538 to 1482	±1/4%	----	----	----	----	----
B	871 to 1705	±1/2%	----	----	----	----	----

Copyright ASME International
Provided by IHS under license with ASME
No reproduction or networking permitted without license from IHS
Not for Resale

Copyright ASME International
Provided by IHS under license with ASME
No reproduction or networking permitted without license from IHS

TABLE 3.3A TEMPERATURE–EMF RELATIONSHIP FOR THERMOCOUPLES

	Emf–Millivolts						
Temperature, Deg F	S (Pt-10Rh vs Pt)	R (Pt-13Rh vs Pt)	B (Pt-30Rh vs Pt)	K (Cr vs Alumel)	J (Iron vs Constantan)	E (Cr vs Constantan)	T (Cu vs Constantan)
32	0.000	0.000	0.00	0.00	0.00	0.00	0.000
200	0.595	0.596	0.02	3.82	4.91	5.87	3.967
400	1.474	1.504	0.18	8.31	11.03	13.75	9.525
600	2.458	2.547	0.47	12.86	17.18	22.25	15.773
700							19.100
800	3.506	3.677	0.89	17.53	23.32	31.09	
1000	4.596	4.868	1.43	22.26	29.52	40.06	
1200	5.726	6.125	2.09	26.98	36.01	49.04	
1400	6.897	7.436	2.85	31.65	42.96	57.92	
1600	8.110	8.809	3.72	36.19			
1800	9.365	10.237	4.68	40.62			
2000	10.662	11.726	5.72	44.91			
2200	11.989	13.255	6.84	49.05			
2400	13.325	14.798	8.03	53.01			
2600	14.656	16.340	9.28				
2800	15.979	17.875	10.56				
3000	17.292	19.394	11.85				
3300			13.84				

Not for Resale

28 Response. The time response of a thermocouple to a temperature change is a function of the mass and geometry of the sensing junction and the mode or modes of heat transfer between the junction and its surroundings. The greater the surface area to mass ratio of the junction, the greater will be the speed of response for a given heat transfer condition. When a thermocouple is encased in a well or protecting sheath, the response indicated by the probe will be governed by the combined effects of heat transfer from the medium to the well and that of the well to the enclosed junction.

ACCESSORIES

29 The minor accessories used in conjunction with thermocouples, such as protection tubes, extension wires, switches and terminal blocks have been discussed in earlier paragraphs of this chapter.

30 A detailed discussion covering instrumentation employed to measure and record the emf signals from thermocouples is given in Section B, Thermocouple Thermometry Instrumentation.

APPLICATION AND INSTALLATION

31 Sources of Error. Experience has shown that there is a definite and reproducible relationship between the difference in temperature of the measuring and reference junctions of a thermocouple and the emf developed. If the reference junction is maintained at some known temperature, such as 32°F (ice point), the emf developed by the thermocouple can be determined as a function of the temperature of the measuring junction. Thus the device may be calibrated and used for measuring temperatures. It is not necessary to maintain the reference junction temperature, during use, the same as during calibration. However, the reference junction temperature in each case must be known. Temperature emf tables for thermocouples are usually based on a reference junction temperature of 32°F (ice point).

The elements of a thermocouple must be electrically insulated from each other, from ground and from conductors on which they may be mounted, except at the measuring junction. When a thermocouple is mounted along a conductor, such as a pipe or a metal structure, special care should be exercised to ensure good electrical insulation between the thermocouple wires and the conductor to prevent stray currents in the conductor from entering the thermocouple circuit and vitiating the readings.

32 Inasmuch as the curves giving the relation between emf and temperature are not, in general, linear, equal increments of temperature do not correspond to equal increments of emf. This should be particularly observed in applying reference junction corrections. Many commercial instruments used in conjunction with thermocouples are provided with either manual or automatic means for compensating for deviations of the reference junction temperature from that on which standard calibrations are based.

33 In the event the emf measuring instrument has automatic reference junction compensation, thermocouple extension wires should be used to connect the thermocouple to the instrument.

34 Essential Considerations. Regardless of the type of thermocouple or the techniques employed in carrying out the measurements, there are certain basic factors which must be considered. The primary consideration is that the temperature indicated by a thermocouple is that of the measuring junction. The accuracy obtained in measuring the temperature of any object or space usually depends upon how closely the measuring junction of the thermocouple can be brought to the temperature of the object or space, or to some temperature which is definitely related to that of the object or space.

35 A small size thermocouple measuring junction suitably imbedded in a solid or immersed in a liquid will attain equality in temperature with the substance and will, therefore, indicate the true temperature of the solid or liquid to within the calibration accuracy of the instrument. However, in many applications this may not be the case. If under steady conditions there is a net exchange of heat between the thermocouple junction and the substance, then a difference in temperature will exist between the two. The magnitude of this difference in temperature depends upon the rate of heat transfer and the thermal resistance between the junction and substance. As an illustration, suppose it is desired to measure the temperature of a metal plate which is heated from within by some means. The bare thermocouple measuring junction is brought into contact with the metal plate. The junction will receive some heat from the plate by thermal conduction. The junction will lose heat by conduction along the thermocouple wires, and by convection, conduction and radiation to the sur-

Copyright ASME International
Provided by IHS under license with ASME
No reproduction or networking permitted without license from IHS
Not for Resale

roundings. Obviously the junction will be at a lower temperature than the plate. This difference in temperature can be reduced by:

(1) Improving the thermal contact by:
  (*a*) Flattening the junction to obtain a larger area of contact
  (*b*) Soldering, brazing, or welding the junction to the plate.
(2) Reducing the heat loss from the junction by:
  (*a*) Using thermocouple wire of the smallest practical diameter.
  (*b*) Keeping the wires close to the plate for some distance so as to reduce the temperature gradient in the wires near the junction.
  (*c*) Raising the temperature of the space surrounding the junction by use of insulation or an auxiliary source of heat.

36 Various procedures and special type thermocouple assemblies have been employed in making gas temperature measurements. Each has certain advantages for particular applications and operating conditions. Following is a list of the most widely used methods and references where detailed information on each may be found:

(1) Coaxial-tube radiation shielded thermocouple [1],* [2].
(2) Aspirating or high-velocity thermocouple [3].
(3) Thermocouple with low emissivity radiation shield [4].
(4) Sonic flow thermocouple pyrometer [5,6].
(5) Radiation compensated thermocouple pyrometer [7].
(6) Thermocouples for steam temperature measurements [8].
(7) Thermocouples for gas measurements in two-phase flow [9].

37 Thermocouples may be joined in series. A series-connected thermocouple assembly is generally referred to as a *thermopile* and is used primarily in measuring small temperature differences, for example, as the sensing element of a radiation receiver. The series connection, in which the output is the arithmetic sum of the emfs of the individual thermocouples, may be used to obtain greater measurement sensitivity. A schematic diagram of a series thermocouple is shown in Fig. 3.3A.

*Numbers in brackets designate References at end of chapter, thus [1].

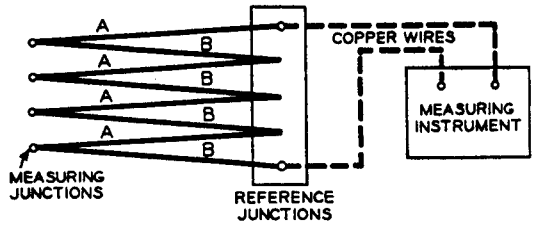

FIG. 3.3A THERMOCOUPLES CONNECTED IN SERIES

38 In a parallel connected thermocouple circuit, a mean value of the individual thermocouples is indicated and it will be the true arithmetic average if all thermocouple circuits are of equal resistance. Should one or more of the thermocouples become open-circuited, the indicated reading will be the mean of the remaining thermocouples. A schematic diagram of a parallel thermocouple circuit is shown in Fig. 3.4A.

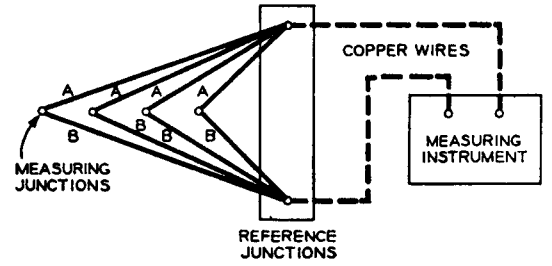

FIG. 3.4A THERMOCOUPLES CONNECTED IN PARALLEL

39 The installation of extensive thermocouple equipment requires the services of qualified instrument technicians. Special attention should be given to extension wires, reference junctions, switches, and terminal assemblies.

40 Treatment of Data. Although the calibration accuracies of the conventional thermocouples are usually well within the tolerances listed in Table 3.1A, it is recommended that sample thermocouples from each lot of material be checked to determine compliance to specifications. Usually it is sufficient to check samples from each end and the center of a spool or coil and consider the average calibration applicable to the entire lot. Corrections for deviations of the average calibration from the established reference table should be applied in reducing observed data. For installations where the highest accuracy is required, the thermocouples should be calibrated separately and corrections applied for deviations from the established reference table in the reduction of the data. Since the

Copyright ASME International
Provided by IHS under license with ASME
No reproduction or networking permitted without license from IHS
Not for Resale

instruments on which the thermocouple emfs are measured are also subject to scale reading corrections, proper account of this factor must be made in reducing the observed data.

ADVANTAGES AND DISADVANTAGES

41 Advantages

(*a*) Simple in basic design and operation.
(*b*) Small in size, flexible, capable of installation in relatively inaccessible spaces.
(*c*) Suitable for remote indication; signal may be used to indicate, record or control temperature.
(*d*) Primary elements are relatively low in cost.
(*e*) All components of the measuring system are individually replaceable.
(*f*) Suitable for wide range temperature applications.
(*g*) High accuracy attainable.

42 Disadvantages

(*a*) A relatively small signal output is produced requiring sensitive measuring equipment.
(*b*) Knowledge of or compensation for reference junction temperature is required.
(*c*) Subject to calibration changes with use.

REFERENCES

43 Throughout the text Reference numbers are enclosed in brackets, thus [1].

[1] "Multiple-Shielded High Temperature Probes," E. M. Moffatt, *Trans. SAE*, vol. 6, p. 567, 1952.
[2] "Determination of Thermal Correction for a Single-Shielded Thermocouple," W. M. Rohsenow and J. P. Hunsacker, *Trans. ASME*, vol. 69, p. 699, 1947.
[3] "The Design of Suction Pyrometers," T. Land and R. Barber, *Trans. Soc. Instr. Tech.*, p. 112, Sept. 1954.
[4] "Shielded Thermocouples for Gas Turbines," A. I. Dahl and E. F. Fiock, *Trans. ASME*, vol. 71, p. 153, 1949.
[5] "A Sonic-Flow Pyrometer for Measuring Gas Temperatures," George T. Lalas, *Journ. Res. Nat. Bur. Stds.*, vol. 47, no. 3, p. 179, 1951.
[6] "A Pyrometer for Measuring Total Temperature in Low Density Gas Streams," S. Allen and J. R. Hamm, *Trans. ASME*, vol. 72, p. 851, 1950.
[7] "Gas Temperature Measurement," W. L. Severinghaus, *Mechanical Engineering*, May 1937, p. 334.
[8] "Measurement of Temperature in High-Velocity Steam," J. W. Murdock and E. F. Fiock, *Trans. ASME*, vol. 72, p. 1155, 1950.
[9] "High Response Aerosol Probe for Sensing Gaseous Temperature in a Two-Phase, Two-Component Flow," R. P. Benedict, *Trans. ASME, J. Engrg. for Power*, vol. 85, p. 245, 1963.

Other references on the general subject of thermocouples:

"Thermoelectric Thermometry," Wm. F. Roeser, *Jour. Applied Physics*, vol. 11, no. 6, p. 388, 1940.
"Thermoelectric Thermometry," Paul H. Dike, Leeds & Northrup Co., 1954.
"Thermoelectric Effects," R. P. Benedict, Electrical Manufacturing, p. 103, Feb. 1960.
"General Principles of Thermoelectric Thermometry," D. I. Finch, vol. 3, part 2, of "Temperature – Its Measurement and Control in Science and Industry," Reinhold, New York, 1962.
"Manual on the Use of Thermocouples in Temperature Measurement," STP 470.

Copyright ASME International
Provided by IHS under license with ASME
No reproduction or networking permitted without license from IHS
Not for Resale

SECTION B, INSTRUMENTATION

GENERAL

1 The basic principle of thermoelectric thermometry is that a thermocouple develops an efm which is a function of the difference in temperature of its measuring (hot) and reference (cold) junctions. If the temperature of the reference junction is known, the temperature of the measuring junction can be determined by measuring the emf generated in the circuit. The use of a thermocouple in temperature measurements therefore requires the use of an instrument capable of measuring emf.

2 While there are two types of emf measuring instruments in common use in industry, millivoltmeters and potentiometers, the former are rarely used in Performance Test Code work because of their inherent limitations.

3 Recording potentiometers are widely used for industrial process temperature measurement and control. However, in general, they are not well suited to Performance Test Code work. Inaccuracies in charts are caused by printing limitations and humidity effects. Practical limits on chart widths and scale lengths result in inadequate readability.

4 Indicating potentiometers are recommended for all Performance Test Code work as they are available with the required readability and accuracy.

5 Thermocouples should be calibrated separately and the calibration corrections should be applied to the instrument readings.

6 Thermocouples should be long enough to connect directly to the instrument or reference junction apparatus. This will eliminate errors which might be introduced by the use of extension wires which may not have temperature-emf characteristics identical to those of the thermocouple.

PRINCIPLES OF OPERATION

7 Accurate measurement is usually a matter of comparing an unknown quantity against a known quantity or standard—the more direct the comparison the better. Accurate weighing, for example, is often accomplished by direct comparison against standard weights using a mechanical balance. If the measured weights are too heavy for direct comparison, lever arms may be used to multiply the forces.

8 The potentiometer, as the term is used here, serves a similar function in the measurement of voltage, and in fact may be called a "voltage balance," the standard voltage being furnished by a standard cell, the "lever" being resistance ratios, and the galvanometer serving as the balance indicator. Since no current is drawn from the standard cell or the measured source at balance, the measurement is independent of external circuit resistance, except to the extent that this affects galvanometer or balancing mechanism sensitivity.

DESCRIPTION

Potentiometer Circuits*

9 One-Dial Potentiometer. Fig. 3.1B shows the circuit of an elementary potentiometer having one measuring dial and a single range. Let us assume that it has a range of 0 to 100 mV.

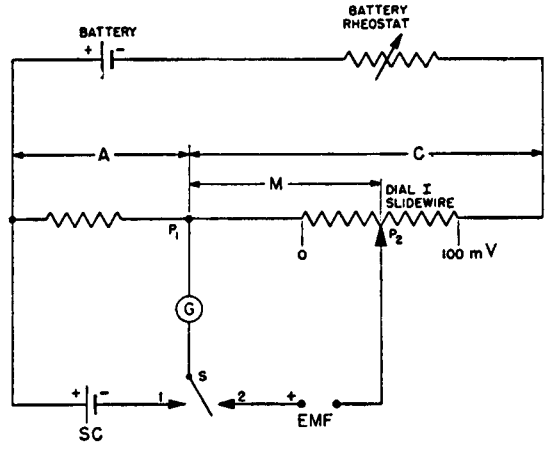

FIG. 3.1B SINGLE-DIAL POTENTIOMETER
Range 0-100 mV

10 Slide-wire C and fixed resistance A are connected in series with the battery and battery rheostat. The resistance A is made a simple multiple of the emf of the standard cell SC, and the current through slide-wire C and fixed resistance A is selected so that when standardized, the drop of potential across resistance A is equal to the voltage of the standard cell which is nominally 1.0190 V.

*The circuits shown in this section do not represent the actual circuits of the instruments listed in Table 3.1B. They are intended only to illustrate basic principles.

Copyright ASME International
Provided by IHS under license with ASME
No reproduction or networking permitted without license from IHS
Not for Resale

11 The resistance of the slide-wire C is selected so that with this same standardized current, the drop of potential across it will be 100 mV. The slider P_2 is arranged so that any value of voltage from 0 to 100 mV may be picked from the slide-wire.

12 In operation, the current through resistance A and slide-wire C is standardized by throwing switch S to position 1, and the battery current is adjusted by means of the battery rheostat until the galvanometer G shows that balance has been attained, that is, that substantially no current flows from the standard cell. The voltage drop across resistance A then matches the emf of the standard cell SC to within extremely close tolerances, the limit being the adjustability of the battery rheostat and the sensitivity of the galvanometer G.

13 The measurement of the unknown emf connected to terminals "EMF" is then accomplished by throwing switch S to position 2 and sliding movable contact P_2 on measuring slide-wire C to a point where the galvanometer G again gives a null indication. The voltage drop across resistance M, that is, from connection P_1 to slider P_2 on the slide-wire, then matches the measured emf to within close tolerances, limited again only by the adjustability of the calibrated slide-wire C and the galvanometer sensitivity. The position of slider P_2 on the slide-wire scale is then directly proportional to the measured emf.

14 Since the same current flows through resistances M and A, the measured emf is compared to the standard cell emf by the resistance ratio M/A with an accuracy very close to that with which this ratio is known, provided of course that the battery current remains constant during the time interval between the standardizing and measuring operations.

15 The calibration of an instrument of this type is stable, since resistors and slide-wires can be made with a high degree of stability and the emf of an unsaturated standard cell as used for potentiometric work does not change more than about 0.01 percent per year. It also has a temperature coefficient of emf of very nearly zero.

16 The usefulness of an elementary potentiometer of this sort having its entire range across the slide-wire, is limited by the resolution possible in setting and reading the position of slider P_2.

17 The smallest practicable scale division on an instrument of this sort is of the order of 0.5 mV or 0.5 percent of span.

18 **Two-Dial Potentiometer.** To improve the accuracy and readability possible on the single dial potentiometer it is necessary to improve the precision with which it is possible to adjust the value of resistance M. This is done most simply by converting connection P_1 to a movable contact, not by using another slide-wire, but with a dial-switch which taps resistance C at various points.

19 Fig. 3.2B shows the circuit of such an instrument. Note that it now takes a double pole switch to shift the galvanometer from the standardizing circuit to the measuring circuit.

20 If M is the resistance between sliders P_1 and P_2 and C is the total resistance of Dials I and II, the operation and explanation of the circuit of Fig. 3.2B is the same as for Fig. 3.1B, except that the measurement requires adjustment of two dials.

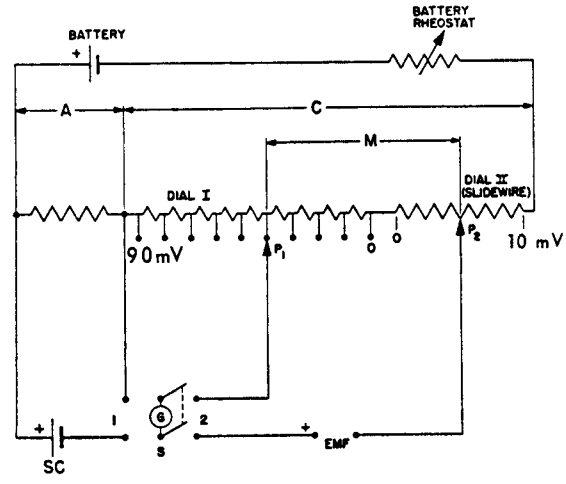

FIG. 3.2B TWO-DIAL POTENTIOMETER
Range 0-100 mV

21 Again the resistance ratio M/A equals the voltage ratio measured-emf/standard-emf, but resistance M can now be adjusted to allow a much closed subdivision of voltage than with only one dial. If Dial I has 10 taps and 9 resistance increments of 1 ohm each, and Dial II is reduced to 1 ohm, the total resistance C is 10 ohms as before. But if the total range remains 0 to 100 mV as before, the slide-wire now covers only 10 mV. The smallest practicable scale division is of the order of 0.05 mV or 0.05 percent of span. Or, to put it another way, the two-dial instrument can be read to one more place than can the single-dial instrument.

Copyright ASME International
Provided by IHS under license with ASME
No reproduction or networking permitted without license from IHS
Not for Resale

22 Note that the two dial readings are made by taking the first figure from Dial I and two or three additional figures from Dial II.

23 **Three-Dial Potentiometer.** A further improvement over the two-dial instrument can be achieved by making a three-dial instrument. Fig. 3.3B shows the circuit of such an instrument.

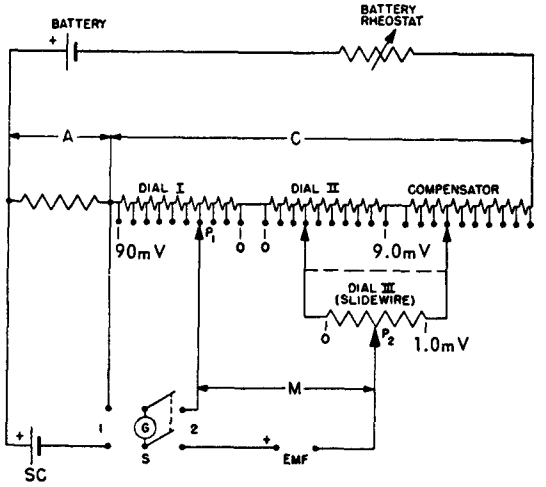

FIG. 3.3B THREE-DIAL POTENTIOMETER
Range 0-100 mV

24 As in the case of a two-dial instrument, Dial I covers the range 0 to 90 mV while the remainder of the range of 0 to 10 mV is divided between Dials II and III, Dial II covering the range 0 to 9 mV and Dial III, the slidewire, covering the range 0 to 1 mV.

25 The third tapped resistor designated as compensator, maintains a constant resistance in the battery circuit as Dial II is operated.

26 The smallest scale division is of the order of 0.005 mV or 0.005 percent of span, making it possible to read the instrument accurately to one more place than the two-dial instrument and to two more places than the one-dial instrument.

27 The actual reading of the instrument is the sum of the settings of Dials I, II, and III.

Reference Junction Compensation

28 **General.** As stated previously, the emf generated by a thermocouple is a function of the difference in temperature between its junctions. Therefore, to use the generated emf to evaluate the measuring junction temperature, the reference junction temperature must be maintained at some fixed and known value, or correction for its temperature must be made.

29 Commercially available thermocouples are of several types, each type having a temperature-emf relationship represented by standardized tables. These tabular values are commonly stated in terms of a reference junction temperature of 32°F.

30 For Performance Test Code work it is recommended that the reference junction of the thermocouple be maintained at 32°F by means of an ice bath as described in the paragraphs on Reference Junction Apparatus in this Section. When such an ice bath is used, the thermocouple emf as measured by a potentiometer calibrated in millivolts (as all those recommended in this section are) can be converted directly to the equivalent temperature of the measuring junction by referring to the proper temperature-emf table.

31 Certain of the potentiometers recommended in this Supplement have no means for correcting their readings for reference junction temperatures other than 32°F, and should always be used with an ice bath.

32 The portable precision potentiometer recommended in this Supplement is sometimes used where the highest degree of accuracy is not required and/or it is undesirable to use an ice bath. This instrument is provided with manual reference junction compensation facilities whereby the setting of proper dials causes the circuit to add or subtract, as the need may be, a voltage to or from the emf generated by the thermocouple. This corrects the instrument reading to a value equivalent to that which would have been generated, had the thermocouple reference junction been at 32°F.

33 If the reference junction temperature of a thermocouple is, say 200°F, rather than 32°F, the emf generated when the measuring junction is at a given temperature will be less than that generated if the reference junction were at 32°F. The emf equivalent of the reference junction temperature of 200°F must then be determined from the temperature-emf table and added to that generated by the thermocouple in order to convert its readings to a reference junction temperature of 32°F, and thus permit direct use of the temperature-emf table.

34 For example, if the emf generated by a Type K thermocouple is 27.83 mV when its reference junction temperature is 200°F, 3.82 mV, the equivalent of 200°F in the temperature-emf table based on a

Copyright ASME International
Provided by IHS under license with ASME
No reproduction or networking permitted without license from IHS
Not for Resale

reference junction temperature of 32°F, must be added to convert to the equivalent value with a reference junction temperature of 32°F (27.83 + 3.82 = 31.65 mV). Referring to the temperature-emf table for Type K thermocouple, it will be found that the temperature of the measuring junction is 1400°F.

35 While reference junction compensation can be made in this manner, it is inconvenient when many readings are being taken.

36 When using manual reference junction compensating facilities, the reference junction temperature must be measured accurately with a liquid-in-glass thermometer, the equivalent emf found from the appropriate temperature-emf table based on 32°F, and the dials set to this value.

37 Method 1 for Manual Reference Junction Compensation. The principle of this method is shown in Fig. 3.4B. If reference is made to Fig. 3.1B

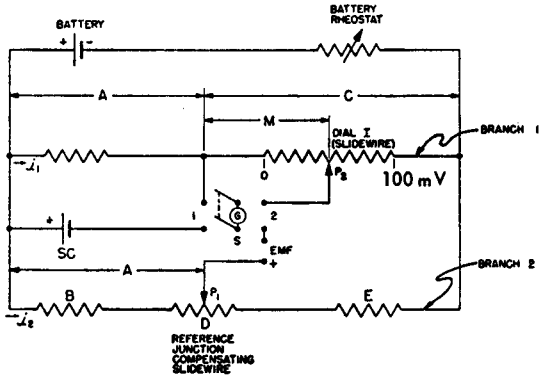

FIG. 3.4B SINGLE-DIAL POTENTIOMETER
Range 0-100 mV with manual reference junction compensator

showing the elementary circuit of the one-dial potentiometer, it will be seen that the upper section of this circuit and that of Fig. 3.4B are identical. A second branch has been added in the circuit of Fig. 3.4B consisting of resistances B and E and slide-wire D connected in series, which in turn are connected in parallel with branch 1 and the battery circuit.

38 For sake of illustration, let us assume that the resistance of each branch is the same and, therefore, currents i_1 and i_2 are equal. If the resistance of (B + ½D) is made equal to resistance A in branch 1, and connection P_1 is moved to the slider on slide-wire D and placed in its mid-position, it will be seen that for any specific value of emf, the two circuits will be in balance for the same position of slider P_2 on the main slide-wire.

39 Slider P_1 can now be moved along slide-wire D to add or subtract a voltage to or from the emf generated by the thermocouple. If slider P_1 is is moved toward resistor E, the voltage will be increased and vice versa. With a suitable millivolt calibration on slide-wire D, connection P_1 can be set to the correction required for any reference junction temperature within its range.

40 Since the main slide-wire in branch 1 and the reference junction compensating slide-wire in branch 2 are both calibrated in millivolts, they are suitable for use with any type of thermocouple.

41 Method 2 for Manual Reference Junction Compensation. Another method of obtaining manual reference junction compensation is shown in principle in Fig. 3.5B. Here again the upper portion of

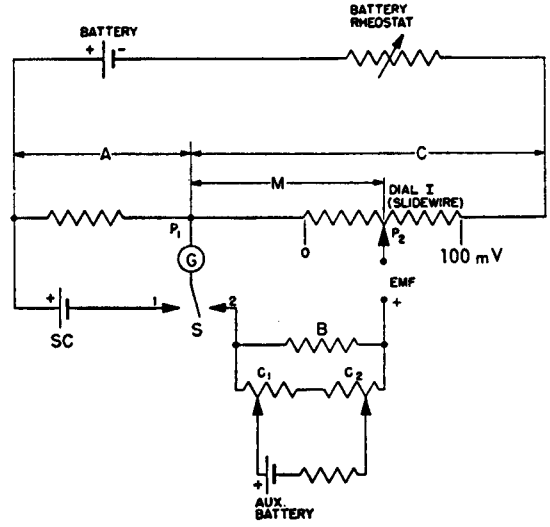

FIG. 3.5B SINGLE-DIAL POTENTIOMETER
Range 0-100 mV with manual reference junction compensator

the circuit is identical with that of Fig. 3.1B, that of the elementary one-dial potentiometer. In this circuit, however, resistance B has been placed in series with the thermocouple. An auxiliary battery and two rheostats C_1 and C_2 supply current through resistance B, and the drop of potential across it is added to the emf of the thermocouple.

42 Adjustment of this circuit for a given reference junction temperature is made by short circuiting the emf terminals and setting the main slide-wire scale to the millivolt equivalent of the reference junction temperature and then adjusting rheostats C_1 and C_2 until a balance is obtained. Fol-

Copyright ASME International
Provided by IHS under license with ASME
No reproduction or networking permitted without license from IHS
Not for Resale

lowing this, the emf read directly from the main slide-wire scale will be corrected for a reference junction temperature of 32°F and may be used directly in the temperature-emf tables.

Automatic Null-Balancing Mechanism

43 Automatic null-balancing potentiometers frequently employ an electro-mechanical servomechanism which detects the difference between an unknown emf and known voltage and actuates a motor to drive the slider on a slide-wire to a point where the two are equal. Fig. 3.6B shows a block diagram of a typical system.

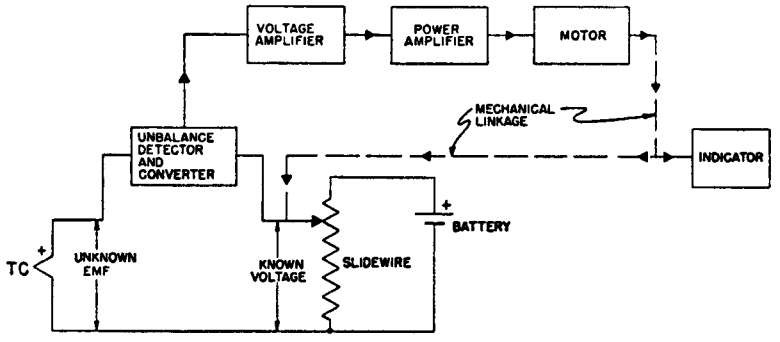

FIG. 3.6B BLOCK DIAGRAM—AUTOMATIC NULL-BALANCING MECHANISM

44 As in a manually balancing instrument, the unknown emf of the thermocouple is connected in opposition to the drop of potential across a slide-wire.

45 The difference between these two voltages, which is a d-c voltage, is converted to an a-c voltage whose phase depends upon whether the unknown voltage is higher or lower than the known voltage. If the unknown emf is higher, the converted alternating voltage is in phase with the line voltage. If it is lower, it is 180 deg out of phase.

46 The alternating voltage from the converter is applied to the input of a multistage voltage amplifier where its amplitude is increased to a value sufficient to drive a power amplifier.

47 The power amplifier serves as a phase discriminator, supplying current to one phase of a two-phase reversible induction motor, whose other phase is supplied from the line voltage through a capacitance.

48 When the unknown emf is higher than the known voltage, the current from the power amplifier leads that of the line phase by 90 deg and the motor rotates in a direction to increase the magnitude of the known voltage.

49 When the unknown voltage is lower than the known voltage, the current from the power amplifier lags the current in the line phase by 90 deg and the motor rotates in the opposite direction to reduce the magnitude of the known voltage.

50 Thus the motor is always driven in a direction such that the difference between the unknown emf and the known voltage is reduced to zero, at which point the motor ceases to rotate, the instrument being in balance.

Types of Indicating Potentiometers

51 Table 3.1B lists the significant characteristics of three types of precision indicating potentiometers presently available, which are used for Performance Test Code work. They are (1) laboratory high precision, (2) plant precision, and (3) portable precision. There are three subtypes of the Laboratory High Precision Instruments, (1A) three-dial automatic balancing, (1B) three-dial manual balancing, and (1C) two-dial manual balancing.

52 It is not intended that suitable instruments developed in the future be excluded from Performance Test Code work. Such instruments should, however, be at least equivalent to those described herein.

53 Type 1A Laboratory High Precision Potentiometer. Laboratory High Precision Potentiometer Type 1A is a self-contained, three-dial, automatic null-balancing indicator. It has a range of 0-70.1 mV, is readable to 0.001 mV(1μV) and has a limit of error of 3 μV or 0.02 percent, whichever is greater. It is suitable for panel mounting.

Copyright ASME International
Provided by IHS under license with ASME
No reproduction or networking permitted without license from IHS
Not for Resale

54 The balancing operation is automatic once the two dial switches are set manually to place the unknown emf within the scale range. This automatic feature facilitates the rapid measurement of a large number of emfs with a minimum of effort and skill on the part of the operator, and with a high degree of accuracy.

55 This instrument is used primarily in the laboratory for calibrating thermocouples, and thermocouple wire differentially against standardized wire of the same type. It is available with self-contained push-button switches for selecting a multiplicity of thermocouples.

56 Types 1B and 1C Laboratory High Precision Potentiometers. Laboratory High Precision Potentiometers Types 1B and 1C have essentially the same performance characteristics. They are of the manually balancing laboratory type, not self-contained, requiring a more or less permanent bench setup with a number of accessories, including a storage battery, high sensitivity galvanometer and laboratory-type standard cell.

57 Type 1B is a three-dial instrument while Type 1C is a two-dial instrument.

58 These instruments have three ranges, 0 to 16,0 to 160, and 0 to 1600 mV. They are readable to 0.0005, 0.005, and 0.05 mV on their respective dials and have corresponding limits of error of 1, 3, and 30 μV or 0.015, 0.015, and 0.01 percent, whichever is greater.

59 These instruments are used for the calibration of thermocouples and thermocouple materials, and checking the calibration of thermocouple thermometer instruments.

60 Plant Precision Potentiometer Type 2. The Plant Precision Potentiometer is a self-contained, two-dial automatic null-balancing indicator similar to Type 1A. It has a range of 0 to 40.1 mV, is readable to 0.0025 mV (2.5 μV) and has a limit of error of 0.5 percent below 6 mV and 0.33 percent above 6 mV. It is suitable for panel mounting.

TABLE 3.1B TYPES OF INDICATING POTENTIOMETERS FOR PERFORMANCE TEST CODE WORK

Type	Laboratory High Precision			Plant Precision	Portable Precision
	1A	1B	1C	2	3
Description	Three-Dial Automatic Balancing	Three-Dial Manual Balancing	Two-Dial Manual Balancing	Two-Dial Automatic Balancing	Two-Dial Manual Balancing
Range(s) mV	0-70.1	0-16/0-160/ 0-1600	0-16/0-160/ 0-1600	0-40.1	0-16/0-80.5
Dial 1, mV	0-60	0-15/0-150/ 0-1500	0-15/0-150/ 0-1500	0-35	0-15/0-75
Dial 2, mV	0-9	0-1/0-10/0-100	–	0-5.1	0-1.1/0-5.5
Dial 3, mV	0-1.1	0.1/1.0/10.0	1.0/10.0/100.0		
Limit of Error	3 μV or* 0.02%	1 μV/3 μV/ 30 μV or* 0.015%/0.015%/ 0.01%	0.015% or* 0.05 mV	0.5% below 6 mV 0.33% above 6 mV	0.01 mV/0.05 mV
Manual Ref. Junction Compensation	No	No	No	No	Yes
range mV	–	–	–	–	0-1/0-5
Method of Balancing	Automatic	Manual	Manual	Automatic	Manual
Portable	No	No	No	No	Yes
Self-Contained	Yes	No	No	Yes	Yes
Self-Contained Multi-point Switch	Optional	–	–	Optional	–

*Whichever is greater

Copyright ASME International
Provided by IHS under license with ASME
No reproduction or networking permitted without license from IHS
Not for Resale

61 The balancing operation is automatic once the dial switch is set manually to place the unknown emf within the scale range.

62 This instrument is used in taking multiple readings throughout the plant. It is available with self-contained key switches for selecting a multiplicity of thermocouples.

63 Portable Precision Potentiometer Type 3. Portable Precision Potentiometer Type 3 is a self-contained, two-dial manual balancing instrument. It has two ranges, 0 to 16.1 mV and 0 to 80.5 mV. The low range is readable to 0.001 mV and the high range to 0.005 mV. Limits of error are 0.01 and 0.015 percent, respectively.

64 This instrument has a manual reference junction compensator with two ranges, 0-1 and 0-5 mV, either of which can be used with either range of the instrument.

65 This instrument, while not recommended for the most precise Performance Test Code work, is used where convenience and portability are more important than the highest degree of accuracy.

66 Analog to Digital Converters – Millivolt Level Input. The use of electronic analog to digital conversion equipment for measuring millivolt level signals from thermocouples requires precautions which are not normally necessary when using null-balance potentiometric types of equipment.

The usual errors due to nonlinearity, zero offset, resolution, stability, and sensitivity exist. In addition, errors may be introduced by noise caused by series and common mode voltage, gain accuracy, quantization and fluctuations in supply voltage and frequency.

The conversion usually occurs very rapidly; generally milliseconds and in some instances microseconds. This introduces one possible source error.

All of these errors may be minimized by proper selection of primary sensors, careful attention to intercabling practices, and selection of hardware having the capability of the required accuracy. Systems are available having stated conversion errors of less than 0.01 percent.

Reference Junction Apparatus

67 Since the emf generated by a thermocouple is a function of the difference in temperature between its measuring junction and its reference junction, the temperature of the reference junction must be known in order to determine the temperature of the measuring junction. *It is axiomatic that the accuracy with which the temperature of the measuring junction is measured can be no greater than the accuracy with which the temperature of the reference junction is known.*

68 Most thermocouple thermometers for industrial applications are furnished with means for automatically compensating the reading of the instrument for the actual reference junction temperature. The reference junction is normally located in the instrument and varies in temperature with ambient conditions. Such compensated instruments usually have their scale calibrated in terms of the temperature of the measuring junction. See Pars. 28-42 for more details on this type of compensation.

69 While automatic reference junction compensation provides an instrument reading in terms of temperature, such an instrument is generally usable with only one type of thermocouple and for only one range of temperatures. Furthermore, the accuracy of the automatic reference junction compensation is limited. Generally speaking, instruments of this type lack sufficient versatility and accuracy for use in Performance Test Code work.

70 In Performance Test Code work there are two basic methods for providing suitable reference junctions. Either the junction is maintained at a fixed temperature, or the temperature of the junction is allowed to vary, and a compensating emf is introduced into the circuit or accounted for by calculation.

71 Under fixed temperature reference junctions can be listed: triple point of water cells, ice baths, automatic ice baths and constant temperature ovens. These are described below.

72 Triple Point of Water. A cell can be constructed in which there is an equilibrium between ice, water, and water vapor. The temperature of this triple point is + 0.01°C on the IPTS-68, and it is reproducible to about 0.0001°C.

73 Single Ice Bath. Fig. 3.7B shows a method for providing an ice bath reference junction. A wide-mouth vacuum bottle is partially filled with shaved ice and water, mixed to give a thick slush. The lid of the vacuum bottle is drilled to accommodate two test tubes for each thermocouple to be used. Clean mercury is placed in the bottom of each

Copyright ASME International
Provided by IHS under license with ASME
No reproduction or networking permitted without license from IHS
Not for Resale

tube to a depth of approximately one-half inch. Insulated copper wires are attached to the ends of the thermocouple wire from the measuring junction, and each joint is placed in a test tube and bottomed so that the junctions of the wires are submerged in the mercury. The assemblage of tubes is then *slowly and gently pressed into the slush.*

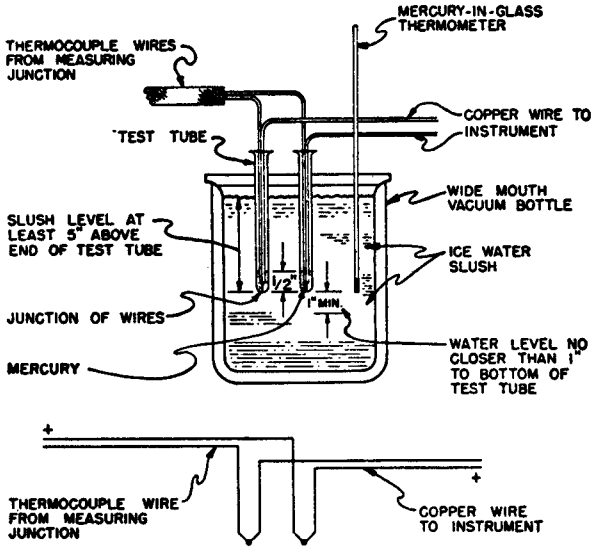

FIG. 3.7B THERMOCOUPLE REFERENCE JUNCTION ICE BATH

74 It is important that enough ice be maintained in the bath so that the level of water does not come closer than 1 in. to the bottom of the test tubes. When setting up the bath, periodic observations should be made to determine the time required for the water level to reach this point. Thereafter shaved ice should be added within this time.

75 It is strongly recommended that a mercury-in-glass thermometer be installed in the bath, to indicate the stability of its temperature. The bulb of the thermometer should be close to the bottoms of the test tubes. Refer to Chapter 6, Liquid-in-Glass Thermometers, for emergent-stem correction procedure.

76 Multiple Ice Bath With Master Ice Bath. When the number of thermocouples used on an installation is large enough to require a number of ice baths, it is recommended that a reference junction master ice bath be used to enable the operator to readily determine whether all the baths are maintaining a temperature of 32°F. Fig. 3.8B shows in pictorial and schematic form a master ice bath installation.

77 A checking thermocouple is installed in each of the ice baths and run to the master ice bath. There its wires are joined to copper wires and the junctions are immersed in mercury contained in test tubes in a manner similar to that used for the measuring thermocouples in the individual ice baths.

78 The copper wires from the test tubes are run to individual points on the indicator switch. This enables the operator to check the temperature of each ice bath to make sure it remains at 32°F.

79 Automatic Ice Bath. Practical thermoelectric refrigerator devices are available in which all equilibrium between ice and water is constantly maintained. The change of volume of water in freezing is used to control the heat transfer. Some commercially available devices provide wells into which the user may insert reference junctions

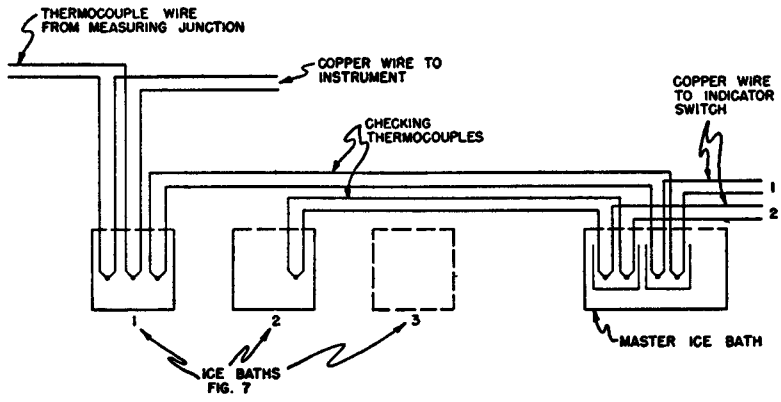

FIG. 3.8B REFERENCE JUNCTION MASTER ICE BATH

Copyright ASME International
Provided by IHS under license with ASME
No reproduction or networking permitted without license from IHS
Not for Resale

formed from his own calibrated wire. Others are provided with many reference junction pairs brought out to terminals which the user may connect into his system. The error introduced into a system by these devices may be as small as 0.1°C.

80 Constant Temperature Ovens. A thermostatically controlled oven provides a means of holding a reference junction at an approximately constant temperature. To use reference junctions held at elevated temperatures with tables based on 0°C reference junction temperature, a constant amount must be added to the thermal emf. Devices using two ovens are available which make this correction automatically.

81 Electrical Compensation. A compensating circuit containing a source of current and a combination of fixed resistors and a temperature sensitive resistor can be obtained which will have a variation of emf similar to that of the reference junction of the thermocouple when its temperature is allowed to change.

82 Zone Box. An alternative method of dealing with many thermocouples makes use of a single reference junction. All the thermocouples are routed to a zone of uniform temperature. A single reference thermocouple also is routed to the same zone box. Through copper wires, the emf of the reference junction is added to each of the measuring junctions in turn as they are switched to the emf measuring instrument. See Fig. 3.9B.

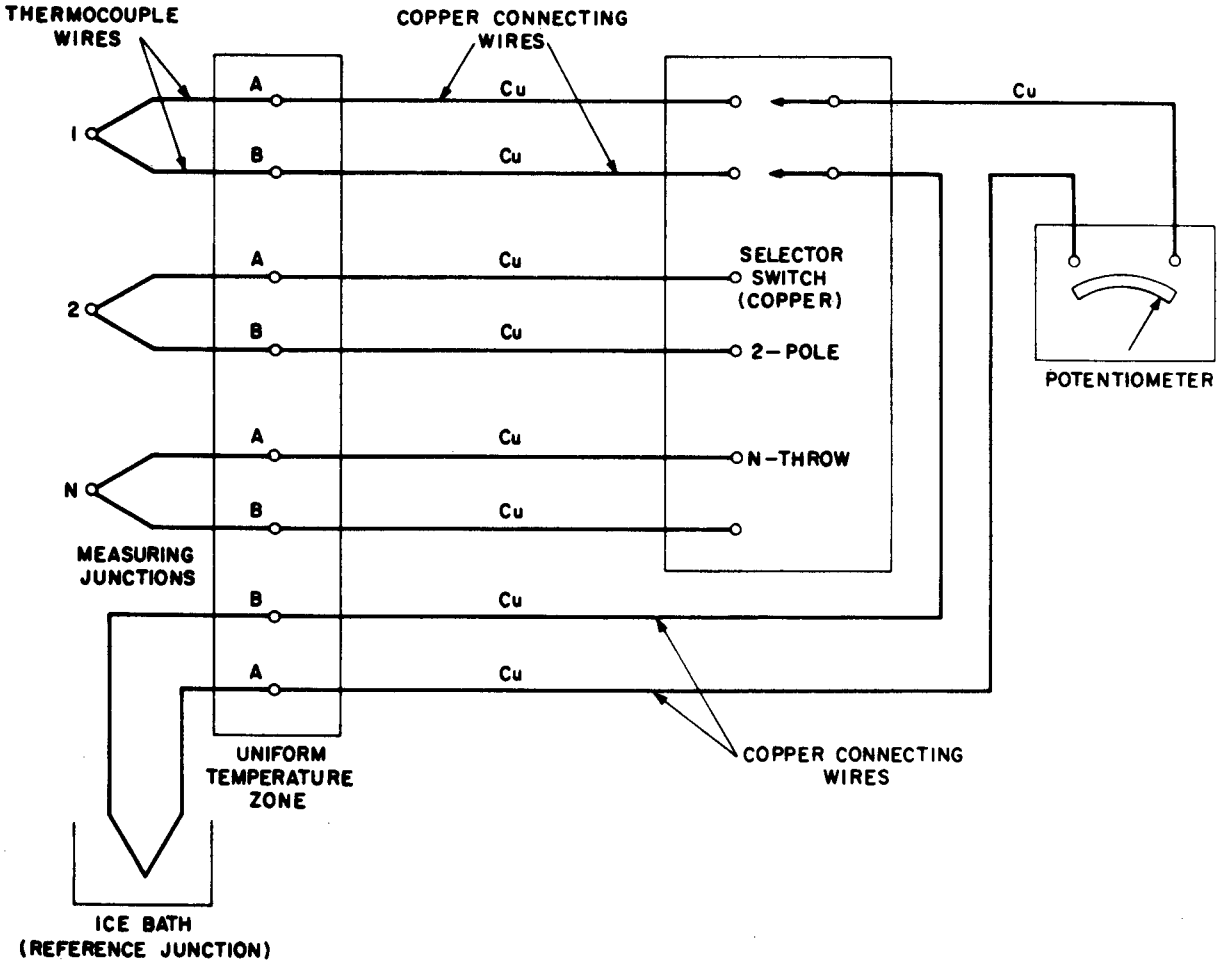

FIG. 3.9B A ZONE-BOX CIRCUIT INVOLVING ONLY ONE REFERENCE JUNCTION

Copyright ASME International
Provided by IHS under license with ASME
No reproduction or networking permitted without license from IHS
Not for Resale

CHAPTER 4, RESISTANCE THERMOMETERS

CONTENTS

	Par.
GENERAL:	
Scope	1
Definitions	2
PRINCIPLES OF OPERATION	5
CLASSIFICATION:	
Description and Materials of Construction	7
CHARACTERISTICS:	
Range	29
Sensitivity	30
Precision	31
Accuracy	32
Response	33
ACCESSORIES	34
APPLICATION AND INSTALLATION:	
Sources of Error	40
Essential Consideration	41
Treatment of Data	43
ADVANTAGES AND DISADVANTAGES:	
Advantages	44
Disadvantages	45
REFERENCES	46

GENERAL

Scope

1 The purpose of this chapter is to present information which will guide the user in the selection, installation, and use of resistance thermometers.

Definitions

2 A Resistance Thermometer is one consisting of a sensing element called a *resistor*, a resistance measuring instrument, and electrical conductors operatively connecting the two.

3 A Resistor consists of a metallic sensing element, usually in wire form, having known reproducible and stable temperature-*resistivity* characteristics.

4 A Thermistor is a special type of resistor comprised of a mixture of metallic oxides known as semiconductors which are substances whose electrical *conductivity* at or near room temperature is less than that of metals but greater than that of typical insulators. Semiconductors have a high *negative* temperature coefficient in contrast with most metals which have a positive coefficient.

PRINCIPLES OF OPERATION

5 The basis for resistance thermometry is the fact that most metals and some semiconductors change in resistivity with temperature in a known, reproducible manner. It has been found that the changes of resistivity with temperature of some metals follow a definite relationship which can be expressed as a simple mathematical formula. For a platinum resistance thermometer, the resistance at any temperature can be represented by the equation:

$$R_t = R_o(1 + AT + BT^2)$$

where

R_t = resistance of thermometer at temperature, T
R_o = resistance of thermometer at 0°C
A, B = constants, dependent on characteristics of the platinum wire.

6 Temperature is measured by measuring the resistance of a calibrated resistor at the temperature to be measured. Pure metal resistors are calibrated at various, known, stable temperatures such as the freezing and boiling points of certain pure materials.

CLASSIFICATION

Description and Materials of Construction

7 Resistance thermometers are classified according to the material used in the resistor. The plati-

Copyright ASME International
Provided by IHS under license with ASME
No reproduction or networking permitted without license from IHS
Not for Resale

num resistance thermometer is further delineated according to usage as precision or industrial.

8 Resistance thermometers are usually cylindrical but special purpose resistance thermometers can be obtained in a flat construction. Some resistors are available as a webbing in which an enameled copper or nickel wire is woven into a warp of silk or other textile material.

9 Platinum Resistance Thermometer. Platinum has been chosen as the resistor material for high accuracy thermometers for the following reasons:

(*a*) The relation between resistivity and temperature is very simple; it holds over a wide temperature range.
(*b*) Its resistivity is relatively high.
(*c*) Its temperature coefficient of resistivity is satisfactory.
(*d*) Physically, it is very stable.
(*e*) It is resistant to corrosion.
(*f*) It can be stress relieved by heating to high temperature in air.
(*g*) It can be drawn to very fine wires.

Platinum is subject to contamination by reducing atmospheres and metallic vapors.

10 Precision Platinum Resistance Thermometer. The precision platinum resistance thermometer is used to define the International Practical Temperature Scale from − 182.96°C (boiling point of oxygen) to 630.74°C (melting point of antimony), (−297.3 to 1168.3°F). In accordance with the definition of the International Practical Temperature Scale, [1,2]* the platinum resistance thermometer must meet the following specifications:

The purity and physical condition of the platinum of which the thermometer is made should be such that the ratio $\frac{R_t}{R_o}$ shall not be less than 1.3925 for $T = 100°C$.

A paper by C.H. Meyers [3] describes in detail the construction of a strainfree precision platinum resistance thermometer occupying a relatively small volume in which a helically spiraled platinum wire is wound helically on a mica form. The mica form consists of two crossed pieces of mica notched to receive the helically wound platinum wire. The winding is annealed and then adjusted to 25.5 ohms ± 0.1 ohm at 0°C. Four gold leads are welded to the platinum (two to each end of the winding) and the assembly mounted in a pyrex tube 7 mm OD. The leads are insulated with glass tubing spaced with mica washers. The assembly is evacuated to one-half atmosphere of dry air and then sealed. This construction is usable over the range −190 to + 500°C (−310 to 932°F). See Fig. 4.1(a).

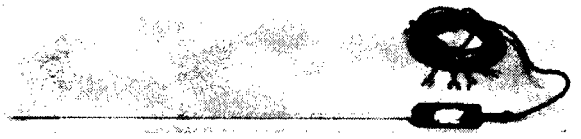

FIG. 4.1(a) TYPE OF PRECISION PLATINUM RESISTANCE THERMOMETER

11 Two factors establish the upper limit of the range of the standard precision platinum resistance thermometer.

(*a*) The protecting tube is Pyrex which yields to stresses at temperatures higher than about 500°C (932°F).
(*b*) Mica crystals contain water of crystallization. At temperatures above 500°C (932°F) water is driven off and the crystalline structure is destroyed; the mica forms which support the platinum winding swell, distort, and crumble.

In making precision platinum resistance thermometers for use at temperatures above 500°C (932°F) a high-temperature resistant mica must be used to make the winding form and the platinum winding must be enclosed in a quartz tube.

12 In low temperature calorimetry, a second form of precision platinum resistance thermometer is frequently used in which the thermometer is part of the calorimeter, thereby eliminating the need for a connection head. In this form of thermometer the standard thermometer resistor winding is placed in a platinum tube; the tube is evacuated and filled with helium prior to sealing. Helium is used to increase the speed of response, by virtue of it having a higher thermal conductivity than air. This form of precision platinum resistance thermometer has a useful range of −269 to +250°C (−452 to +482°F). See Fig. 4.1(b).

13 Another form of precision platinum resistance thermometer is frequently used in calorimetry work in the range of −50 to + 100°C (−58 to +212°F). In this form, the platinum wire is wound on a flat mica form, notched to retain the platinum wire; the winding is protected by flat mica sheets, and the assembly is placed in a thin-walled metal tube. After

*Throughout the text Reference numbers are enclosed in brackets, thus [1].

Copyright ASME International
Provided by IHS under license with ASME
No reproduction or networking permitted without license from IHS
Not for Resale

closing the end, the portion of the tube over the resistance winding is flattened to increase the speed of response. See Fig. 4.1(c).

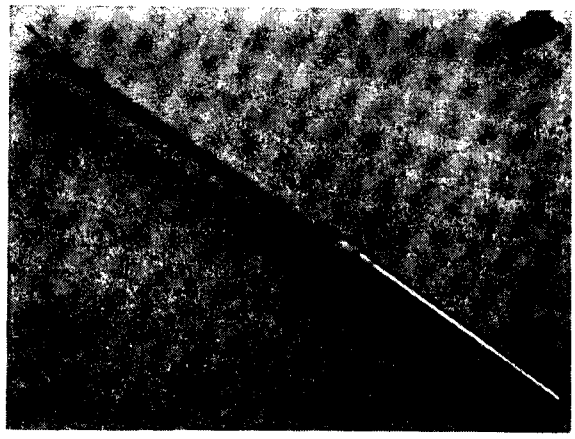

FIG. 4.1(b) TYPE OF PRECISION PLATINUM RESISTANCE THERMOMETER

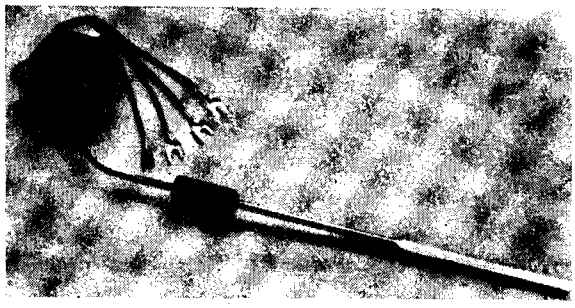

FIG. 4.1(c) TYPE OF PRECISION PLATINUM RESISTANCE THERMOMETER

14 Industrial Platinum Resistance Thermometers. The platinum requirements for reproducibility and limit of error in resistance thermometers for industrial temperature measurements are, in general, less severe than for primary standards. Usually a precision of ±0.1 deg C is adequate. Consequently, it is unnecessary to observe some of the precautions required for the construction of standard thermometers. Strain-free support of the windings is less important. Larger measuring currents are permissible and usually a more robust construction is required.

15 Platinum is used in industrial applications because of its stability and ability to withstand high temperatures without deterioration. The upper limit of the thermometer range is a result of the limitation of the mountings and methods of construction rather than of the characteristics of the platinum.

16 The differences in construction between the standard precision and industrial platinum resistance thermometers are tabulated below.

Component	Standard Precision	Industrial
Wire	Bare	Insulated–high temperature
Winding Form	Mica	Metal
Protection Tube	Pyrex	Metal–(usually stainless steel)
Insulation (of leads)	Glass Tube and Mica Spacers	Ceramic

17 Nickel Resistance Thermometer. Nickel has been used satisfactorily as a resistance thermometer material. Its low cost as compared with the standard platinum thermometer has been the determining factor in its adoption for industrial measurements in its range of temperatures about −75 to +150°C (−100 to +300°F). It is less stable in its characteristics than platinum. The upper limit is imposed by the materials used in insulating the nickel wire–enamel, silk, or cotton. The limit of error is dependent upon the measuring circuit used, and on the range. With a balanced bridge method of measurement, it is of the order of ±0.5 deg F.

18 Copper Resistance Thermometer. Copper is an excellent material for use in resistance thermometry. Its temperature coefficient is slightly greater than that of platinum. It can be secured commercially in a pure state, so that it is not difficult to match an established temperature-resistivity table. The resistivity-temperature curve is straight within narrow limits from about −60 to +400°F. That is, for copper the curve becomes $R_t = R_o\ (1 + AT)$. Because of this linear characteristic two copper resistance thermometers can be used for temperature-difference measurements where a compensator is used to match the resistances of the two thermometers so that accurate measurements to within ±0.1 deg F can be made for temperature-difference work.

19 The disadvantages of the copper resistance thermometer are:

(*a*) Its tendency to oxidize at higher temperatures.
(*b*) Its low resistivity compared to platinum or nickel.

Copyright ASME International
Provided by IHS under license with ASME
No reproduction or networking permitted without license from IHS
Not for Resale

(*c*) Its windings must be of fine wire to avoid massiveness, and consequent slowness in response to temperature changes if it has the same resistance as platinum or nickel thermometers.

Copper resistance thermometers usually have a resistance of 10 ohms at 77°F. The stability of calibration is excellent, much superior to that of nickel. Copper resistance thermometers can be depended upon to maintain their accuracy over a long period of time provided the manufacturer's temperature limitation is not exceeded.

20 In a common method of construction of both copper and nickel resistance thermometers the insulated wire is wound bifilar on a metal bobbin and three leads are attached—two to one end of the winding, and one to the other end to compensate for ambient temperature changes. The bobbin is inserted in a thin-walled metal tube, closed at one end. The bobbin must make intimate contact with the inside of tube—by so doing the speed of response is greatly increased. The protecting tube over the nickel or copper resistance thermometer is sealed.

21 Copper resistance thermometers intended for insertion in the windings of electrical machinery are made of grids of copper imbedded in flexible plastic strips.

22 Ten ohm copper resistance thermometers are used in pairs for wet bulb and dry bulb temperature measurements in the determination of relative humidity.

23 Nonmetallic Resistance Thermometer (Thermistor). In general, thermistor resistance thermometers are used where sensitivity, accuracy, speed of response, ruggedness, small size, and calibration stability requirements exceed those attainable with other types of thermometers. Thermistors have limited use, however, because of short ranges, noninterchangeability and higher over-all cost.

24 The high resistance of thermistors minimizes the effect of lead length variations while the high temperature coefficient of resistivity permits the design of circuits having high sensitivity.

25 Unfortunately, thermistors cannot be obtained with a uniformity of resistance at a given temperature to better than about 20 percent, on a run-of-mill basis. By selection, tolerances on the order of 2 percent can be realized. This lack of interchangeability requires circuit adjustment upon replacement of units.

26 While the shape of the temperature-resistivity curves for the commonly used resistance thermometer materials such as copper, nickel and platinum depart to only a minor degree from a straight line, the curve for a thermistor is exponential in shape.

27 This extreme nonlinearity limits the useful range of a calibrated instrument to relatively narrow temperature spans unless specially designed circuits are used to "linearize" their output.

28 Other Metals. To be useful as a resistor, the metal must have stable characteristics, not be subject to permanent change, and not have any critical temperature; i.e., transformation point where crystalline structure will change when heated to any temperature within the intended operating range. Pure metals are generally preferable. Alloys usually have lower and less reproducible temperature coefficient of resistivity than pure metals.

CHARACTERISTICS

29 Range. Precision resistance thermometers are used for measuring temperatures from –269 to 630.74°C (–452.2 to 1168.3°F). Two precision platinum resistance thermometers would be required to cover this span—the thermometer described in Par. 10 plus a low temperature calorimetry thermometer useful over the range of –269 to +250°C (–452.2 to +482°F).

The industrial platinum resistance thermometer can be used over ranges of 0 to 1064°C (32 to 1950°F), and –182.97 to 0°C (–297.3 to 32°F) – the latter type is sealed to prevent moisture accumulation shorting out the leads.

Copper resistance thermometers can be used over the range of –195.6 to 121.1°C (–320 to +250°F) although the 100 ohm type is preferred for negative temperature measurements.

Nickel resistance thermometers have a useful range of –40 to +121.1°C (–100 to +300°F).

30 Sensitivity. Although the coefficient of resistivity of platinum is lower than that for the base metal resistance thermometers, approximately 25 ohms in the resistance winding produces a sensitivity of about 0.1 ohm per °C. Comparatively, 10 ohms of copper produces a sensitivity of approximately 0.022 ohm per deg F; 100 ohms of copper, 0.215 ohm per deg F; and 100 ohms of nickel produces a sensitivity of 0.186 to 0.213 ohm per deg F.

Copyright ASME International
Provided by IHS under license with ASME
No reproduction or networking permitted without license from IHS
Not for Resale

31 Precision. Resistance thermometers offer the utmost in precision over their useful range. Temperatures as measured by the precision platinum resistance thermometer are reproducible to ±0.001 deg C; the industrial type of platinum resistance thermometer reproduces to ±0.15 deg C; the base metal resistance thermometers to ±0.05 deg C.

32 Accuracy. The precision platinum resistance thermometer has an accuracy of ±.01 deg C when certified. The industrial platinum thermometer has a standard limit of error of ±1.5 deg C but can be obtained with special limits of error of ±0.75 deg C. The base metal resistance thermometers are guaranteed to ±0.25 deg C; they can be adjusted to ±0.1 deg C over a limited span when so specified and at a premium price.

33 Response. The response time of resistance thermometers varies considerably depending upon their construction. The values shown in Table 4.1 are based on the time of the resistance thermometers to detect 90 percent of any temperature change in stirred water moving at approximately one foot per second.

ACCESSORIES

34 A Mueller bridge is used for measuring changes in resistance of precision platinum resistance thermometers. This bridge is an advanced modification of the conventional Wheatstone bridge. The Mueller [4] circuit provides extreme accuracy over a comparatively narrow range. Designed to provide a standard of temperature throughout the range of −190 to +500°C, the Type G-2 Mueller bridge, reading directly in ohms, combines with the precision platinum resistance thermometer for exact measurements by the electrical resistance method. This combination has a limit of only ±0.01 deg C over its working range. Where the extreme accuracy of the Type G-2 Mueller bridge is not required, the Type G-1 may be used. It is capable of measuring resistances within the limit of a few ten thousandths of an ohm, or ±0.02 percent whichever is larger.

35 The instrument used in measuring the changes in resistance of base-metal and industrial platinum resistors usually employs some form of Wheatstone bridge circuit and may be either an indicator or a recorder. The bridge may be of the balanced or unbalanced type. A potentiometric method of measuring the resistance is used occasionally.

TABLE 4.1 TYPICAL CHARACTERISTICS OF RESISTANCE THERMOMETERS

	Noble Metal		Base Metal			Nonmetallic
	Precision	Industrial	10 ohms	Copper 100 ohms	Nickel 100 ohms	Thermistor
Sensitivity	0.1 ohm/deg C	0.22 ohm/deg F	0.22 ohm/deg F	0.22 ohm/deg F	0.186 ohm/deg F 0.213 ohm/deg F	Varies with units
Precision	±0.001 deg C	±0.3 deg F	±0.1 deg F	±0.1 deg F	±0.1 deg F	±0.02 deg F up to 200°F
Accuracy	±0.01 deg C	±3.0 deg F Std ±1.5 deg F Spec	±0.5 deg F Std ±0.2 deg F Spec	±0.5 deg F Std ±0.2 deg F Spec	±0.5 deg F Std ±0.2 deg F Spec	±0.5 deg F Std ±0.2 deg F Spec
Response—Bare		15 sec	20 sec	40 sec	40 sec	Fast
Response—w/well		30 sec	60 sec	90 sec	90 sec	
Resistance	25.5 ohms at 0°C	25 ohms at 32°F	10 ohms at 77°F	100 ohms at 77°F	100 ohms at 77°F	Varies with units
Linearity	70.1°C/50°C span	70.1°C/50°C span	excellent	excellent	excellent	Exponential
Range	−452.2 to 1168.3°F (−269 to 630.74°C)	−297.3 to 1950°F (−182.96 to 1064°C)	−100 to 300°F (−75 to 150°C)	−325 to 300°F (−200 to 150°C)	−100 to 300°F (−75 to 140°C)	−100 to 500°F (−75 to 260°C)

Copyright ASME International
Provided by IHS under license with ASME
No reproduction or networking permitted without license from IHS
Not for Resale

36 Balanced Bridge Methods. Fig. 4.2 shows a typical diagram of a Wheatstone bridge used for resistance thermometer measurement; (a) and (b) are ratio arms of equal resistance; (r) is a variable resistance, the value of which can be adjusted to balance the bridge so that, except for lead resistance, (r) = (x), (x) being the resistance of the thermometer resistor. Copper wires vary in resistance with temperature, having a temperature coefficient of the same order of magnitude as that of the thermometer resistor, and, if their resistance is appreciable in comparison with that of the thermometer resistor, may introduce large and uncertain errors into the measurement of temperature. Since the thermometer resistor usually must be placed at a considerable distance from the bridge, the resistance of the wires must be compensated. Fig. 4.2

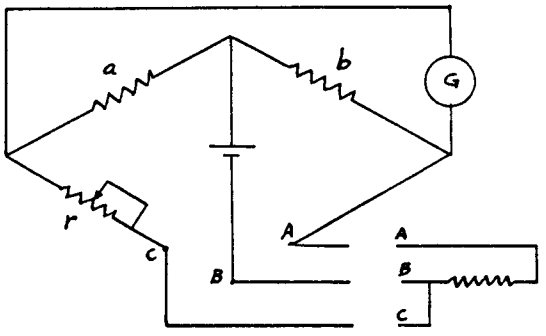

FIG. 4.2 SCHEMATIC OF WHEATSTONE BRIDGE CIRCUIT

illustrates one method of accomplishing this result. Three wires A, B, C connect the measuring instrument and the thermometer resistor (x). Of these, A and C should be identical in size, length, and material, and should be placed side by side throughout their length, so as to be alike in temperature. The B wire, which is one of the battery wires, need not be similar to the others, but it is common practice to form the three wires into a cable and make them all alike. A and C are in the thermometer resistor arm (x), and the variable resistance arm (r), respectively. Their resistance remains equal although their temperature conditions may change, and hence, with a one-to-one bridge ratio, such changes have no effect on the bridge reading.

37 It is desirable to have no variable contact resistances in the bridge arms, because the variations in bridge balance introduced at the contacts may be sufficient to seriously effect the reliability of the measurements. The effect of these variations, as well as those resulting from unequal leads, may be reduced by using a resistor of several hundred ohms resistance in the thermometer. Where, in the interest of speed of response, this resistance is of the order of 100 ohms or less, a circuit shown in Fig. 4.3 is often used in resistance thermometer instruments.

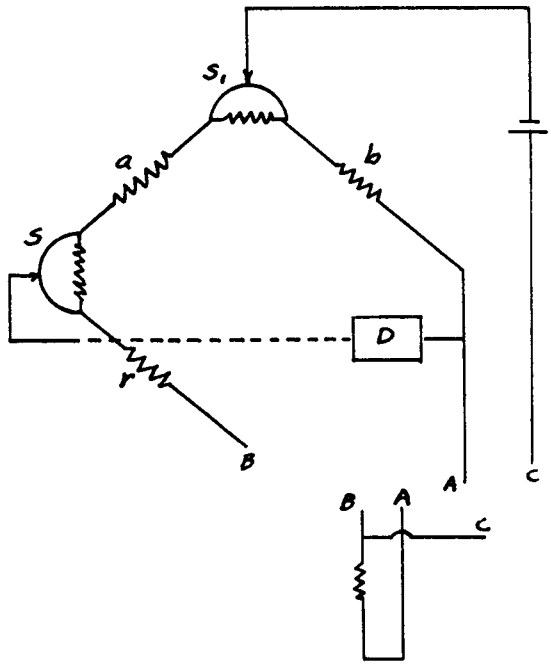

FIG. 4.3 WHEATSTONE BRIDGE CIRCUIT FOR INDICATORS OR RECORDERS

S and S_1 are uniform slide-wires of equal length; S has twice the resistance of S_1. The contacts of the detector and battery leads are moved simultaneously and by equal distance along the slide-wide to balance the bridge. The variable contacts are thus placed in the battery and detector circuits where they can have no effect on the balance point of the bridge, while a one-to-one bridge ratio is constantly maintained. A scale associated with the slide-wire may be graduated in degrees (C or F), or in ohms. If the scale is graduated in degrees, a winding properly adjusted to match resistance and temperature coefficient of the material for which the bridge is calibrated must be used as the sensitive element.

38 Unbalanced Bridge Method. This method is shown schematically in Figs. 4.4 and 4.5. A, B, C, represent the terminals of the resistance thermometer resistor located at the point where the temperature is to be measured. D and E are equal ratio arms. P is a fixed resistor of a value equal to that

Copyright ASME International
Provided by IHS under license with ASME
No reproduction or networking permitted without license from IHS
Not for Resale

of the winding at the highest temperature on the indicator scale, while y is a fixed resistor equal in resistance to the winding at the lowest temperature on the scale. To standardize the current the switch is thrown to the side marked "Std," and the battery rheostat "R.H." is adjusted until the indicator deflects to the lowest temperature reading on the scale. After standardizing, the switch is thrown to the measuring position. This check should be made at intervals depending upon the stability of the current source. The method has the advantage that the temperature is constantly indicated on the scale without requiring manual or automatic balance of the bridge. It may be used with indicating, recording, or controlling instruments. It is subject to the usual limitations of deflection instruments and is not adaptable to precision measurements.

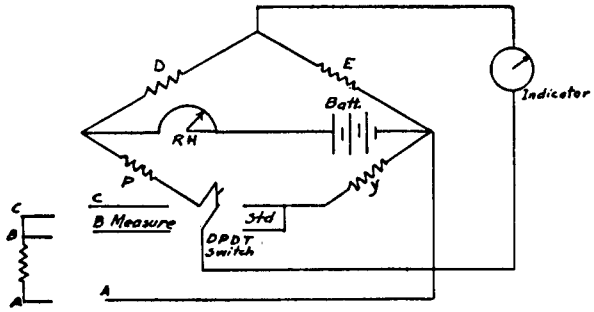

FIG. 4.4 UNBALANCED BRIDGE METHOD—DC SUPPLY

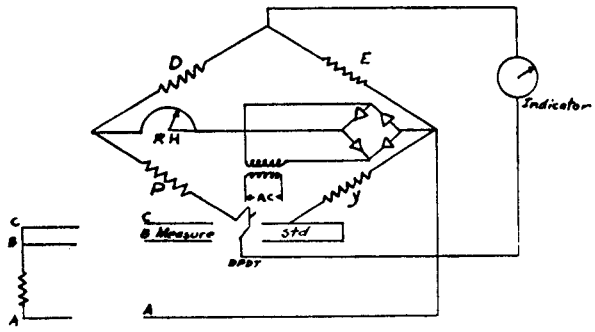

FIG. 4.5 UNBALANCED BRIDGE METHOD—AC SUPPLY

39 Potentiometric Method. The potentiometric method of resistance measurement is applicable to four-lead resistance thermometers only, Fig. 4.6. The current, adjusted to a suitable value by resistor r_1, flows through a standard resistor (or resistance box) R_s and the thermometer resistor R_t. The potential drops e_s and e_t, through R_s and R_t respectively, are measured by means of the potentiometer P. The resistance R_t is determined from the relation

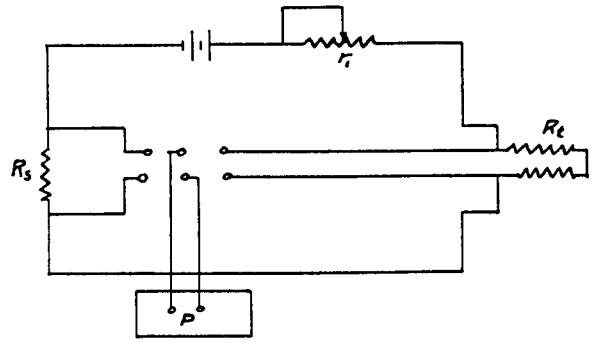

FIG. 4.6 POTENTIOMETRIC METHOD

$R_t = R_s \frac{e_t}{e_s}$. Or, if R_s is adjustable, e_s may be made equal to e_t by adjusting R_s, in which case $R_t = R_s$ and R_t is read directly from the calibrated dials of R_s. It is essential that the current through R_s and R_t remain constant during the two potentiometer balances required. Consequently, in the second method, it is necessary to check that the current change resulting from adjustment or R_s has been insignificant. If r_1 is large compared with R_s and R_t, this condition will be more easily satisfied. The resistance measurement by means of this method is independent of the lead resistance.

APPLICATION AND INSTALLATION

Sources of Error

40 Because of its inherently large sensing area, the resistance thermometer is more susceptible to radiation errors than the thermocouple when the temperature of a gas is to be measured in a pipe or duct with the walls at a considerably different temperature from that of the gas.

Essential Considerations

41 The proper value of current to be used in a given apparatus will usually be specified by the manufacturer. Since the thermometer resistor is insulated electrically, and to some extent, thermally, its temperature is raised by the measuring current to something above that of its surroundings. Therefore, the current must be kept small enough to avoid causing a rise in temperature which is more than a small fraction of the limit of error of the measuring equipment. To test the degree of com-

Copyright ASME International
Provided by IHS under license with ASME
No reproduction or networking permitted without license from IHS
Not for Resale

pliance with this condition, the thermometer may be placed in melting ice and the bridge balanced, using a measured bridge current. When a steady reading is obtained, the current should be reduced to half of its original value and, if necessary, the bridge rebalanced. If a significant change in resistance is observed, the current is again reduced by half and a new measurement made. The current should be reduced to such a value that further reduction produces no observable change in the indication of the instrument. For the sake of sensitivity, the bridge current used should be as large as permissible.

42 The indicating or recording instrument may be located at a distance from the point at which the temperature is to be measured. Connection is made by means of a three or four conductor copper cable covered with rubber or lead. The conductors are usually 16 or 18 AWG copper individually insulated with rubber or more temperature resistant material. Each wire must be of the same length in order to assure equality of resistance of the compensating leads even though they may be subject to uniform temperature conditions.

Treatment of Data

43 The observed temperature readings need not be corrected provided the resistance thermometer is immersed, in accordance with manufacturer's directions, in the medium whose temperature is being measured. Corrections for drift in calibration may be evaluated by periodic checking of the resistance thermometer at the ice point and comparing these checks to the original ice point resistance.

ADVANTAGES AND DISADVANTAGES

44 Advantages

(*a*) By proper selection, resistance thermometers may be used to cover ranges extending from −450 to 1950°F.
(*b*) High accuracy.
(*c*) Excellent stability and reproducibility.
(*d*) Interchangeable.
(*e*) Can be matched to close tolerances for temperature difference measurements.

45 Disadvantages

(*a*) More mass than thermocouple.
(*b*) Relatively slow response.
(*c*) Subject to mechanical damage if not properly handled.
(*d*) Higher cost than thermocouple.

REFERENCES

46 Throughout the text Reference numbers are enclosed in brackets, thus [1].

[1] "The International Practice–Temperature Scale of 1963," Comite International des Poids et Measures, Metrologie vol. 5, No. 2 p. 35, Apr. 1969.
[2] "International Practical Temperature Scale of 1968," Benidict, RP, L&N Technical Journal, Spring 1969.
[3] Published in 1932 as National Bureau of Research, Paper 508, (vol. 9, p. 807).
[4] "Wheatstone Bridges and Some Accessory Apparatus For Resistance Thermometry," by E.F. Mueller, Scientific Papers of the Bureau of Standards, vol. 13, p. 547, 1916.

Copyright ASME International
Provided by IHS under license with ASME
No reproduction or networking permitted without license from IHS
Not for Resale

CHAPTER 5, LIQUID-IN-GLASS THERMOMETERS

CONTENTS

	Par.
GENERAL:	
Scope	1
Definitions	2
PRINCIPLES OF OPERATION	6
CLASSIFICATION:	
Description	7
Materials of Construction	20
CHARACTERISTICS:	
Range	25
Sensitivity	26
Precision	27
Accuracy	28
Response	31
ACCESSORIES	32
APPLICATION AND INSTALLATION:	
Sources of Error	34
Essential Considerations	45
Treatment of Data	46
ADVANTAGES AND DISADVANTAGES:	
Advantages	49
Disadvantages	50
REFERENCE	51

GENERAL

Scope

1 The purpose of this chapter is to present information which will guide the user in the selection, installation, and use of liquid-in-glass thermometers.

Definitions

2 A Liquid-in-Glass Thermometer is one consisting of a thin-walled glass *bulb* attached to a glass capillary *stem* closed at the opposite end, with the bulb and a portion of the stem filled with an expansive liquid, the remaining part of the stem being filled with the vapor of the liquid or a mixture of this vapor and an inert gas. Associated with the stem is a *scale* in temperature degrees so arranged that when calibrated the reading corresponding to the end of the liquid column indicates the temperature of the bulb.

3 A Partial Immersion Thermometer (Fig. 5.1) is one which is designed to indicate temperature correctly when used with the bulb and a specified part of the liquid column in the stem exposed to the temperature being measured, the remainder of the liquid column and the gas above the liquid exposed to a temperature which may or may not be different.

4 A Total Immersion Thermometer (Fig. 5.1) is one which is designed to indicate temperature correctly when used with the bulb and the entire liquid column in the stem exposed to the temperature being measured, and the gas above the liquid exposed to a temperature which may or may not be different.

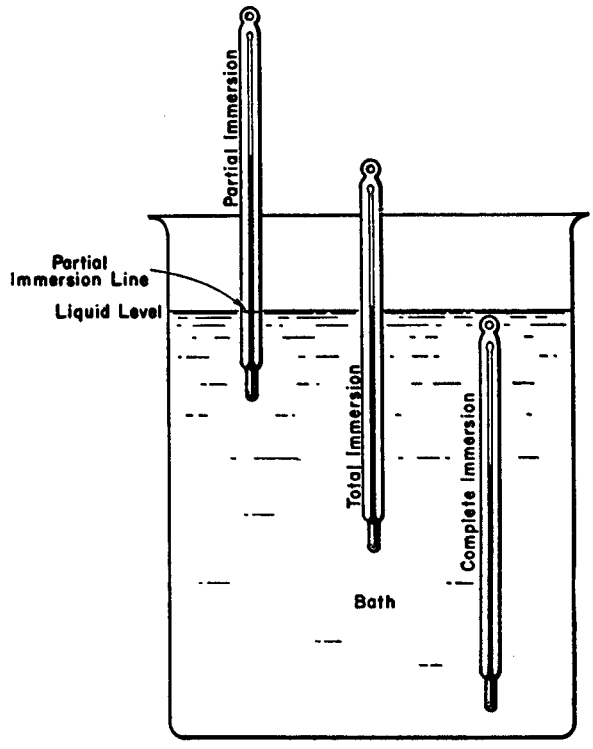

FIG. 5.1 PARTIAL, TOTAL AND COMPLETE IMMERSION THERMOMETER

Copyright ASME International
Provided by IHS under license with ASME
No reproduction or networking permitted without license from IHS
Not for Resale

5 A Complete Immersion Thermometer (Fig. 5.1) is one which is designed to indicate temperature correctly when used with the bulb, entire liquid column in the stem, and gas above the liquid exposed to the temperature being measured.

PRINCIPLES OF OPERATION

6 The operation of a liquid-in-glass thermometer depends upon the coefficient of expansion of the liquid being greater than that of the bulb glass. As a consequence, an increase in the temperature of the bulb causes liquid to be expelled from the bulb, resulting in a rise in position of the end of the liquid column. The capillary stem attached to the bulb serves to magnify this change in volume on a scale.

CLASSIFICATION

Description

7 Etched Stem Laboratory Thermometer. As the name suggests, the scale is marked directly on the stem by etching. The etched stem marks are made legible by filling with a pigment material of such composition as to adhere to the etched surfaces or be chemically bonded as by fusion. A bare, total immersion thermometer, is illustrated in Fig. 5.2. A partial immersion thermometer mounted in an open face armor is illustrated in Fig. 5.3.

8 Industrial Type Thermometer. In this type, the bulb and a portion of the stem are enclosed in a metal tube while the scale section is contained in an attached metal case. The scale is engraved or printed on metal plates fastened to the inside of the case. The case opening is generally closed by a glass window.

9 Industrial thermometers are available in a variety of stem lengths, case sizes, and case-stem angles. The bulb chamber or sensitive portion may be immersed directly in the medium whose temperature is being measured, or it may be inserted in a well (separable socket) which in turn is immersed. Where the thermometer is mounted in an essentially permanent manner, the extension of the bulb assembly incorporates a threaded swivel nut connection. Union bushing and flange connections are also available as alternative means of mounting. Some types are used at various immersions and are termed plain bulb style. No threaded connection is included with this type.



FIG. 5.2 BARE, TOTAL IMMERSION THERMOMETER

10 The case-stem angles are the 180 deg or straight, the 90 deg back angle, 90 deg right and left side angles, and various oblique angles.

11 Fig. 5.4 shows a straight form thermometer with swivel nut mounted in a well. Fig. 5.5 shows a 90 deg back angle thermometer with swivel nut and union bushing connection.

12 Tube-and-Scale Type Thermometer. In one form of tube-and-scale thermometer, the scale is inscribed on a piece of paper, cardboard, or milk glass suitably attached to the stem and mounted within a protecting glass sheath. In the better grades, the bulb is not contained within the sheath.

13 A special form of this type is the *Beckman Differential Thermometer* usually made with a short range such as 5 deg C and a very open scale having, for example, 0.01 deg C subdivisions. The range can be varied at will by changing the amount

Copyright ASME International
Provided by IHS under license with ASME
No reproduction or networking permitted without license from IHS
Not for Resale



FIR. 5.3 PARTIAL IMMERSION THERMOMETER MOUNTED IN AN OPEN FACE ARMOR

of mercury in the bulb, any excess being retained in a reservoir at the top. This type is used frequently in calorimetry, particularly in the bomb method for fuels.

14 Another form of tube-and-scale thermometer is the *tin-case* or *cup-case*. In this form the tube is mounted either on an engraved metal scale, which in turn is held in place in an open face case, or the tube and scale are independently mounted on a suitable support, often made of wood, to which a cup is attached in which the thermometer is immersed. The cup type is used for measuring temperatures of liquids in inaccessible points such as in large storage tanks. The thermometer is dipped into the tank and is allowed to come to thermal equilibrium. As it is withdrawn for reading, the liquid in the cup helps to maintain the bulb at the temperature being measured.

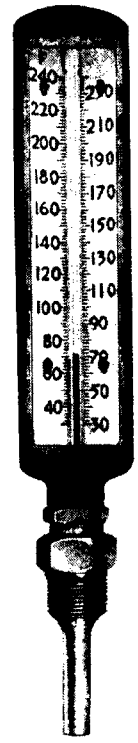

FIG. 5.4 STRAIGHT INDUSTRIAL THERMOMETER WITH SWIVEL NUT, MOUNTED IN A WELL

15 A further form is the so-called *window* or *wall* type, in which the scale is printed on a wood, metal or plastic back to which the tube is fastened. This type is commonly used for measuring air temperatures both indoors and outdoors.

16 **Registering Type Thermometer.** The common form of liquid-in-glass thermometer is *nonregistering* and must be read while immersed in the medium whose temperature is being measured. Thermometers of a *registering* type are used for the measurement of temperature in locations where the thermometer can be observed only after it has been taken from the medium whose temperature is being measured. These thermometers are generally of the etched stem type.

17 The *maximum-registering* type contains mercury (or mercury-thallim alloy) under vacuum and indicates the maximum temperature to which the bulb has been exposed subsequent to resetting. Built into the bore just above the bulb is a constriction which allows mercury to squeeze through on rising temperatures, but prevents the mercury from returning to the bulb except when extraordinary force is applied, as by shaking toward the bulb.

Copyright ASME International
Provided by IHS under license with ASME
No reproduction or networking permitted without license from IHS
Not for Resale

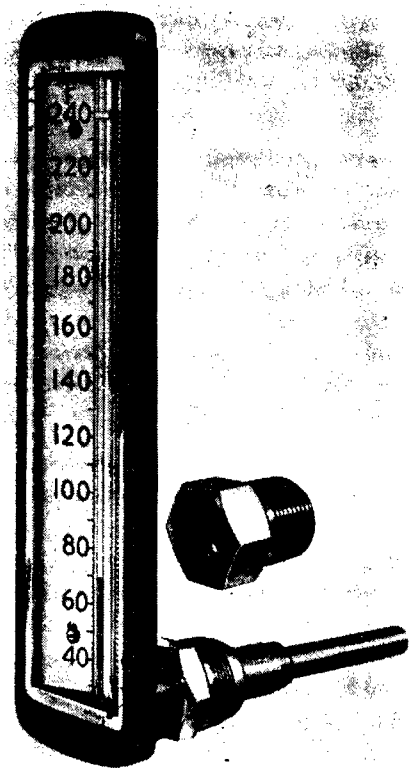

FIG. 5.5 90 DEG BACK ANGLE INDUSTRIAL THERMOMETER WITH SWIVEL NUT AND UNION BUSHING CONNECTION

18 The *minimum-registering* type is usually alcohol filled and is used horizontally. It indicates the minimum temperature to which the bulb has been exposed subsequent to resetting. It contains a glass index submerged in the liquid. This index is carried toward the bulb by surface forces at the end of the liquid column on falling temperatures, but remains in position on rising temperatures. The index is reset by tipping the bulb upward.

19 A combination *maximum-minimum* thermometer, identified as a *Six's Thermometer* (invented by James Six), is built in a U shape and contains a maximum and a minimum index. The temperature sensing bulb at the end of one limb is filled with a beechwood creosote-alcohol mixture. The U is closed by mercury which positions one or the other index on changes in temperature. The other limb is partially filled with the creosote-alcohol which serves as a lubricant for the maximum registering index. Each index consists of a closed glass tube containing a piece of iron wire. Attached to one end of the index is a glass spring. As the mercury moves, it forces the index upward. Falling is prevented by the action of the spring. The index can be reset by a magnet.

Materials of Construction

20 Glasses. In order to obtain optimum performance characteristics, various criteria should be considered in the selection of materials. The glasses of bulb and stem should be compatible to permit uniting with a well knit, strong joint. They should not soften or become excessively brittle in the temperature range of the thermometer. The bulb glass in particular should be of a formulation which lends itself to dimensional stabilization or aging by heat treatment. The stem glass should lend itself to drawing into capillary tube form with a high degree of uniformity of bore diameter and freedom from optical distortion.

21 The range of liquid-in-glass thermometers is limited by the glass and the liquid used. The safe upper limit of several glasses in common use is shown in Table 5.1.

TABLE 5.1 TEMPERATURE EXPOSURE LIMITS FOR VARIOUS THERMOMETER GLASSES[a]

	Exposure limits			
	Continuous		Intermittent	
	°C	°F	°C	°F
Corning Normal 7560	370	700	[b]430	[b]805
Kimble R 6	360	680	420	790
Jena 16 III	365	690	425	795
Corning Borosilicate 8800	400	750	460	860
Jeno Borosilicate 2954	420	790	480	900
Corning 1720	540	1005	600	1110
Jena Supremax 2955	535	995	595	1100

[a] From Reference [1].
[b] 405°C or 760°F if Corning Standard Thermometer 0041 glass is used for the stem.

22 Liquids. The liquid should be of a high state of purity to insure constancy of expansion characteristics. Ideally the liquid should not wet the bore. Mercury and mercury-thallium alloy have this attribute. If organic liquids are used, as for example in cases where visibility of a mercury thermometer is poor, the liquid should wet the bore uniformly and with a minimum amount of "film holdup" on falling temperatures. Such liquids should be chemically stable and lend themselves to coloring with light-

Copyright ASME International
Provided by IHS under license with ASME
No reproduction or networking permitted without license from IHS
Not for Resale

fast dyes. The working ranges of several liquids in common use are shown in Table 5.2.

TABLE 5.2 WORKING TEMPERATURE RANGE FOR LIQUIDS COMMONLY USED

Working Range	Liquid
−38 to 1150°F	Mercury
−56 to 250°F	Mercury-thallium
−328 to 450°F	Organic liquids

23 Gases. When gas is used above the liquid, the gas should be inert to the liquid. Nitrogen and carbon dioxide are commonly used with mercury, while hydrogen is usually the choice with mercury-thallium. For most organic liquids air is sufficiently inert. The pressure of the gas should be high enough to minimize the vaporization of the liquid at any temperature in the operating range.

24 Metals. Various metals are used for bulb assemblies, although steel, stainless steel, and brass are the most common. Brass and aluminum are generally used for the case. Heat transfer media are normally included in the bulb chamber. The most common materials are mercury, copper dust, graphite, and silver dust. Selection is determined by the range of the thermometer and the material of the bulb chamber.

CHARACTERISTICS

25 Range is determined by the application requirements limited by the physical characteristics of the materials of construction. Selection of thermometers with extremely broad or narrow ranges or very fine degree of subdivision, will add significantly to the cost. Review of manufacturers' standard listings will frequently be helpful in choosing special ranges.

26 Sensitivity is determined by the cross-section area of the capillary bore and the proportion of that area to the volume of the bulb. Application conditions frequently limit the length of scale and the size of bulb. Practical limitations of tubing and thermometer manufacture are significant factors in establishing minimum bore diameters. Sensitivities far in excess of the precision or accuracy of measurement are misleading and generally are costly, particularly if specially designed thermometers are being used.

27 Precision of measurement of temperature with liquid-in-glass thermometers depends upon the thermometer design and the application conditions as well as the care exercised in reading.

28 Accuracy of temperature measurement is dependent upon the same factors which affect precision, and in addition the accuracy of calibration or standardization and periodic evaluation of secular changes in the bulb glass. With well designed thermometers the accuracy of calibration is a function of range and graduation interval. National Bureau of Standards certification tolerances for such thermometers are listed in Tables 5.3 and 5.4.

29 The values shown in Tables 5.3 and 5.4 for "Tolerance in degrees" represent acceptable limits of error of uncertified thermometers. "Accuracy in degrees" is the limit of error to be anticipated when corrections are applied, and when proper attention to such details as maintenance of correct immersion, avoidance of parallax, etc., are exercised in the use of the thermometers. "Corrections stated to" are the limits to which NBS certification values are rounded off.

30 With extreme care and attention to detail the limits of accuracy listed in Tables 5.3 and 5.4 might be made smaller, but usually it is preferable to use another type of measuring device, such as a platinum resistance thermometer, if a higher order of accuracy is required. Because of the uncertainty of measurement of the temperature of an emergent column, partial immersion thermometers generally cannot be expected to give results of the same accuracy as otherwise equivalent design total immersion thermometers. The etched stem form is to be relied upon for results of the highest accuracy. The industrial and tube-and-scale forms are affected by heat conduction of the parts other than the glass tube. Such heat transfer is difficult to measure accurately and result in uncertainties in temperature measurement.

31 Response of liquid-in-glass thermometers is a function of thermometer design and use conditions. In most cases, the response time-temperature relationship is exponential and a single value, most commonly the 63 percent response, is used in evaluation of this variable.

ACCESSORIES

32 Wells or sockets are the major accessories for liquid-in-glass thermometers. For a general discussion of wells refer to Chapter 1, Pars. 8 through 19.

Copyright ASME International
Provided by IHS under license with ASME
No reproduction or networking permitted without license from IHS
Not for Resale

TABLE 5.3 TOLERANCES FOR FAHRENHEIT MERCURIAL TOTAL IMMERSION LABORATORY THERMOMETERS

Temperature Range in Degrees	Graduation Interval in Degrees	Tolerance in Degrees	Accuracy in Degrees	Corrections Stated to
Thermometers for Low Temperatures				
−35 to 32	1 or 0.5	1	0.1 −0.2	0.1
−35 to 32	0.2	0.5	0.05	0.02
Thermometers Not Graduated Above 300 Deg				
32 up to 300	2	1	0.2 −0.5	0.2
32 up to 300	1 or 0.5	1	0.1 −0.2	0.1
32 up to 212	0.2 or 0.1	0.5	0.02−0.05	0.02
Thermometers Not Graduated Above 600 Deg				
32 up to 212	2 or 1	1	0.2 −0.5	0.2
Above 212 up to 600		2	0.5	0.2
Thermometers Graduated Above 600 Deg				
32 up to 600	5	4	0.5 −1.0	0.5
Above 600 up to 950		7	1 −2	0.5
32 up to 600	2 or 1	3	0.2 −1.0	0.2
Above 600 up to 950		6	0.5 −1.0	0.2

TABLE 5.4 TOLERANCES FOR FAHRENHEIT MERCURIAL PARTIAL IMMERSION LABORATORY THERMOMETERS

Temperature Range in Degrees	Graduation Interval in Degrees	Tolerance in Degrees	Accuracy in Degrees	Corrections Stated to
Thermometers for Low Temperatures				
−35 to 32	1	1	0.3−0.5	0.1
Thermometers Not Graduated Above 300 Deg				
32 up to 300	2 or 1	2	0.2−1.0	0.2
Thermometers Not Graduated Above 600 Deg				
32 up to 212	2 or 1	2	0.2−0.5	0.2
Above 212 up to 600	2 or 1	3	1 −2	0.5
Thermometers Graduated Above 600 Deg				
32 up to 600	5 or 2	5.0	1 −2	1
Above 600 up to 950		10	2 −3	1

Copyright ASME International
Provided by IHS under license with ASME
No reproduction or networking permitted without license from IHS
Not for Resale

33 As an aid to accurate reading, small magnifiers are sometimes used. These are usually clipped on the stem, but must be positioned carefully to avoid the introduction of parallax error.

APPLICATION AND INSTALLATION

Sources of Error

34 Liquid-in-glass thermometers are subject to variations in manufacture which necessitate the determination and application of instrument corrections for accurate results. Techniques and equipment for such calibration are discussed in detail in Chapter 9.

35 Sources of error may be present in the use of liquid-in-glass thermometers which do not enter into either the original manufacture or subsequent calibration. These should be taken into consideration in Performance Test Codes work and the corrections determined should be applied when significant.

36 The most frequently encountered source of error is the misuse of the *emergent-stem correction.* This correction derives from use of the thermometer with a portion of the stem exposed to a different temperature from that of calibration. A common example is the use at partial immersion of a thermometer calibrated for total immersion. This correction may be quite large if the number of degrees emergent and the difference between the temperature of the bath and the space above it are large. For example, at a bath temperature of 750°F a total immersion etched stem thermometer used at 3 in. immersion may be in error by as much as 35°F.

37 The emergent-stem correction is to be added algebraically to the indicated temperature of a liquid-in-glass thermometer. For a total immersion mercury-in-glass thermometer it can be calculated from the following equation:

$$K = 0.00009\, D\, (t_1 - t_2)$$

where

K = correction in deg F

D = emergent-stem, which is the length of exposed mercury column, expressed in deg F on thermometer stem

t_1 = temperature* indicated by the thermometer in deg F

t_2 = average temperature in deg F of the exposed mercury column. Values of t_2 are usually measured by means of an auxiliary thermometer mounted as shown in Fig. 5.6.

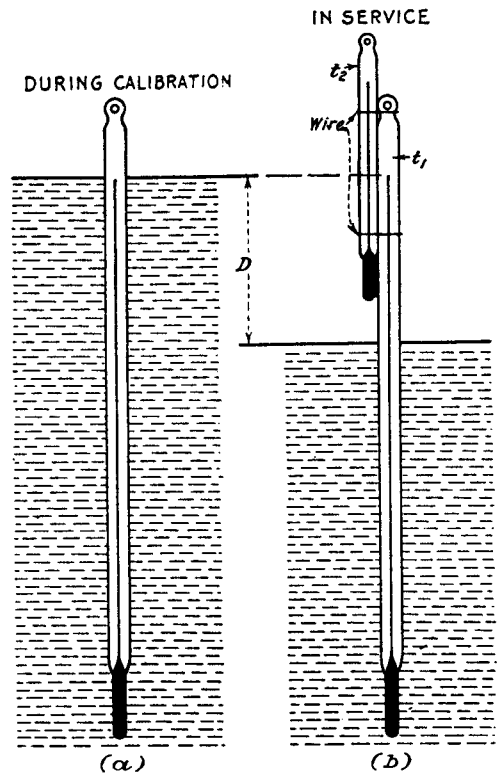

FIG. 5.6 THERMOMETER CALIBRATED FOR TOTAL IMMERSION AND USED FOR PARTIAL IMMERSION

The correction K for various values of D, t_1, and t_2 may also be obtained from the chart, Fig. 5.7.

38 If a partial immersion thermometer is calibrated for specified emergent-stem temperatures and is used under other conditions, a correction should be deter-

*Inasmuch as the t_1 is not the true temperature of the bulb of the immersed thermometer, the correction K is only approximate upon the first substitution in the above equation. If a new substitution in the equation is made using $t_1 + K$ as the new value for t_1, the new correction K will be nearer correct than the first value. Further recalculation with t_1 corrected for the new value of K will result in a more correct value for K. Seldom are more than two recalculations necessary and then only for high temperatures and long emergent-stems.

Copyright ASME International
Provided by IHS under license with ASME
No reproduction or networking permitted without license from IHS
Not for Resale

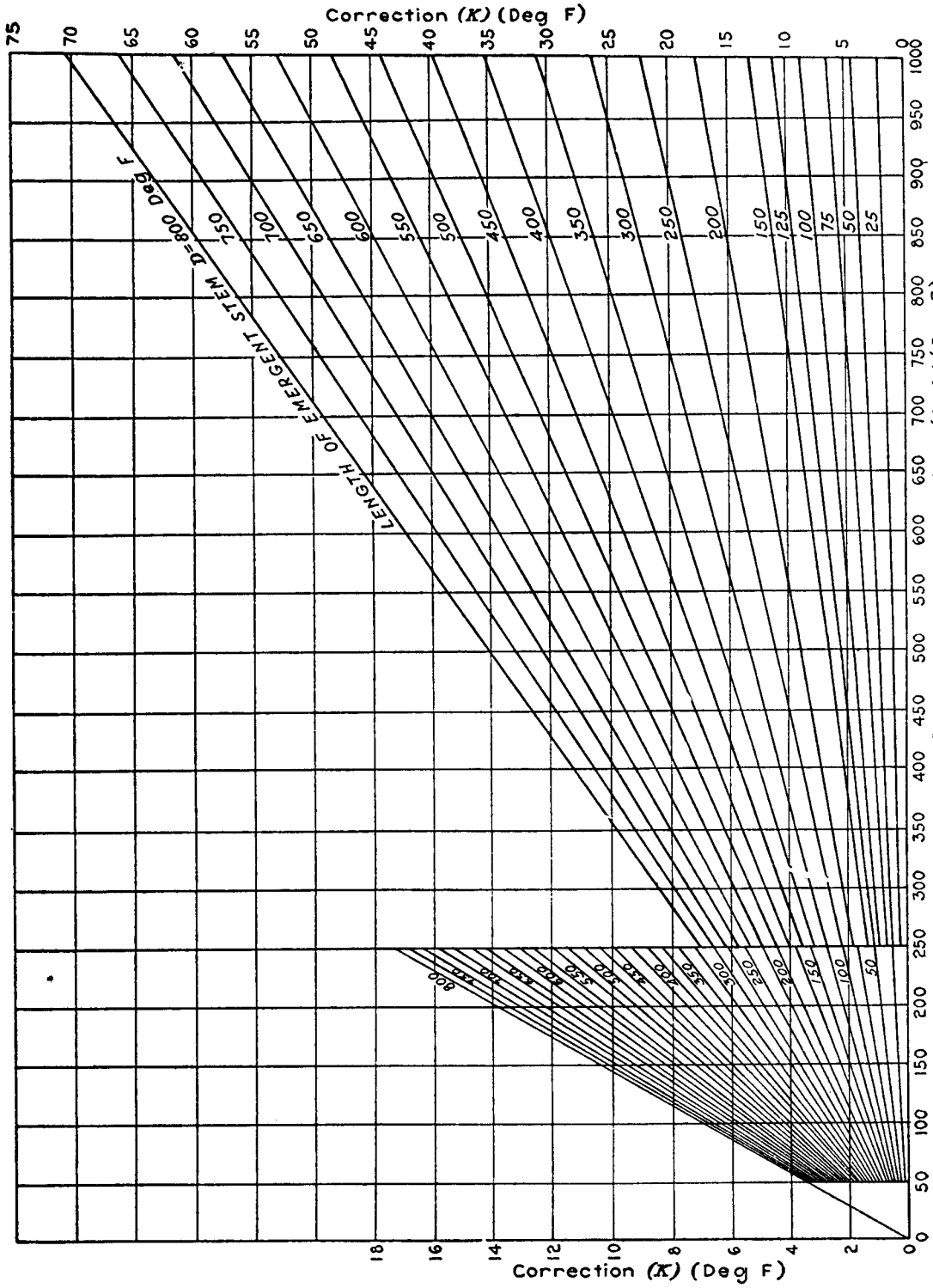

FIG. 5.7 EMERGENT-STEM CORRECTIONS FOR LIQUID-IN-GLASS THERMOMETERS

Copyright ASME International
Provided by IHS under license with ASME
No reproduction or networking permitted without license from IHS
Not for Resale

mined for this difference in emergent-stem temperature. For a mercury-in-glass thermometer it can be calculated from the following equation:

$$K = 0.00009\, D\, (t_s - t_o)$$

where K and D have the same significance as in Par. 37 and

t_s = specified average temperature in deg F of the exposed mercury column

t_o = observed average temperature in deg F of the exposed mercury column.

The correction so determined should be added algebraically to the indicated temperature.

39 A second factor which should be considered is the dynamic error or the lag of the thermometer in indicating the temperature of the medium being measured. The general considerations given in Pars. 36 and 37 of Chapter 1 should be taken into account. The diameter and wall thickness of the thermometer bulb should be as small as possible consistent with other features of instrument design and performance. The filling liquid in the thermometer should have as low a heat capacity as possible recognizing however that for most accurate work mercury should be used.

40 A third factor which may be of significance as a source of error is the effect of external pressure. If the bulb of the thermometer is exposed to pressures appreciably different from atmospheric pressure, the bulb volume will change due to the elasticity of the glass. Experience has shown that for bulb diameters of 5 to 7 mm as commonly used in liquid-in-glass thermometers, the pressure coefficient is approximately 0.2 deg F per atmosphere. If the conditions of test are such that this factor is significant, it should be evaluated and a correction applied.

41 On most industrial and many tube-and-scale types of thermometers, it is possible to effect relative displacement of the tube with respect to the scale. Hence, for maximum accuracy a reference mark should be engraved on the tube corresponding to a specific scale graduation. This permits ready inspection and adjustment if such displacement has taken place.

42 If industrial thermometers are handled roughly, separations of the liquid may occur and such separations are not apparent in the scale section. Comparison against a standardized thermometer permits ready detection of such faults.

43 When high temperature range thermometers are heated at the upper limits of the range, the glass may become plastic and allow the bulb to stretch. Such damage can be detected only by recalibration at any convenient temperature.

44 The changes which occur in thermometer bulb glass on heating to a temperature, high but still within its intended range of use, and subsequent cooling to ambient are an involved function of time and temperature and will depend upon the thermal history of the glass, both during manufacture and previous use, the time of exposure to the high temperature and the rate of cooling.

The techniques of good manufacture are designed to produce in the thermometer glass a state which will result in maximum stability at the temperature of use. The achievement of perfect stability for all conditions of use, however, is not possible in thermometer manufacture so that changes in ice point readings with time and use are observed. The changes observed in scale readings at the ice point reflect changes of the same magnitude and sign at all points on the scale since they are the result of changes in bulb volume; changes in the stem have very little effect.

The changes in bulb volume are of two kinds resulting naturally from the behavior of glass.

(*a*) *Temporary Changes.* Upon heating to high temperature the bulb expands from its initial state and, after a short period of time, appears to reach an equilibrium condition corresponding to that particular high temperature. If the thermometer is then cooled sufficiently slowly through critical temperature regions, the glass will return to close to its initial state, and the ice point reading will show no change on this account. If, on the other hand, the thermometer is cooled rapidly as, for example, cooling naturally in still air, the bulb will retain a portion of its expanded condition, and the ice-point reading will be *lower* than its reading before the heating. This phenomenon is known as "zero, or ice-point depression." Thermometers which have been heated to high temperatures recover from this ice-point depression in an unpredictable way, and frequently there will be no significant recovery after a year's time at

Copyright ASME International
Provided by IHS under license with ASME
No reproduction or networking permitted without license from IHS
Not for Resale

room temperature. The icepoint depression has a reproducible value, however, for a thermometer cooled in still air, so that the ice point, taken from time-to-time immediately (within about 1 hr) following cooling in this manner, may be used reliably to show changes in thermometer bulb volume with time and use.

On the other hand, thermometers used only up to about 100 deg C will usually exhibit a relatively rapid recovery from the ice-point depression, and the original bulb volume will be recovered within the equivalent of 0.01 or 0.02 deg C in about 3 days. This phenomenon has an important bearing on the precision attainable with mercury thermometers and must be taken into consideration in precision thermometry, especially in the interval 0 to 100 deg C. Thus, if a thermometer is used to measure a given temperature, it will read lower than it otherwise would if it has a short time previously been exposed to a higher temperature. With the better grades of thermometric glasses the error resulting from this hysteresis will not exceed (in the interval 0 to 100) 0.01 of a degree for each 10 deg difference between the temperature being measured and the higher temperature to which the thermometer has recently been exposed and with the best glasses only a few thousandths of a degree for each 10 deg difference. The errors due to this hysteresis become somewhat erratic at temperatures much above 100 deg C. For the reasons briefly set forth above it is customary, in precision thermometry, to apply a scale correction based upon an icepoint reading taken immediately after the temperature measurement.

(*b*) *Permanent Changes.* A second type of change in thermometer glasses, known as the "secular change," results in a nonrecoverable decrease in bulb volume which may progress with time even at room temperature, but which is markedly accelerated at high temperatures. This type of change is evidenced by an *increase* in the ice-point reading. At low to moderate temperatures there may be a gradual change which will continue for years. With better grades of thermometer glasses the change will not exceed 0.1 deg C in many years, provided the thermometer has not been heated to temperatures above about 150°C. In addition, permanent changes in bulb volumes have sometimes been observed with thermometers which have been repeatedly cycled at low temperatures, for example between −30 and +25°C. At high temperatures the secular change usually progresses more rapidly at first, but, with continued heating, tends toward lower rate of change with time. The rate of secular change will be dependent upon the kind of glass used in the thermometer bulb and the particular heat treatment given the thermometer in manufacture. Thermometers manufactured according to good practices will evidence only small secular changes but thermometers made of glass unsuitable for the use temperature, or improperly annealed, may show changes as large as 20 deg C (36 deg F) after continued heating at high temperature

In the use of high-temperature thermometers care must be taken to avoid overheating. In only a few minutes of heating at a temperature higher than the intended range of the thermometer, the built-up gas pressure above the liquid column may cause a permanent distortion of the bulb resulting in lower thermometer indications.

Essential Considerations

45 When using a liquid-in-glass thermometer the following must be observed:

(*a*) Decide where to place the bulb of the thermometer, considering:
- (1) Is the temperature at the place selected representative of the information wanted, and
- (2) Can the thermometer attain or assume the temperature of the medium if so placed.

(*b*) Select the thermometer considering the following factors:
- (1) Range and graduation interval.
- (2) Immersion.
- (3) Sensitivity and response time.
- (4) Form, i.e., etched stem, industrial etc.
- (5) If a well is to be used, it should be of the right material, shape, and size.
- (6) The thermometer should be capable of giving results of the accuracy desired but not appreciably better.

(*c*) Install the thermometer properly and use care in reading, avoiding the following:
- (1) External heat sources or sinks near the thermometer which might affect its indication.

Copyright ASME International
Provided by IHS under license with ASME
No reproduction or networking permitted without license from IHS
Not for Resale

(2) Parallax in reading.
(3) Inadequate illumination.

Treatment of Data

46 The observed temperature readings should be corrected for instrumental errors using the calibration correction values. Corrections at temperatures other than calibration temperatures should be determined by linear interpolation. Corrections for drift in calibration may be evaluated by periodic checking of the ice point or other convenient reference temperature and applying the observed change in correction at this temperature to all other correction values.

47 Emergent-stem, lag, and external pressure corrections should be calculated and applied when necessary.

48 Example: A total immersion etched stem thermometer range 30 to 400°F, when partially immersed and mounted in a well in a steam line indicated a temperature of 352.5°F. The calibration corrections are −0.5 deg F at 32 deg F, + 1.5 deg F at 300 deg F and 0.0 deg F at 400°F. An auxiliary thermometer used to measure the temperature of the emergent stem read 125 deg F. The total immersion etched stem thermometer was not totally immersed and it had a scale reading at the top of the test well of 65°F. The ice point reading on the main thermometer taken after the test was 33.0°F.

Ice point correction: 32.0−33.0 = −1.0 deg F.
Change in ice point correction:

$$-1.0-(-0.5) = -0.5 \text{ deg F.}$$

Revised calibration corrections:

$$+1.5-0.5 = +1.0 \text{ deg F at } 300^\circ\text{F}$$
$$0.0-0.5 = -0.5 \text{ deg F at } 400^\circ\text{F}$$

Interpolated correction at 352.5 °F:

$$\frac{52.5}{100}\left[+1.0-(-0.5)\right] = 0.8 \text{ deg F}$$
$$+1.0-0.8 = +0.2 \text{ deg F}$$

Corrected reading:

$$352.5 + 0.2 = 352.7$$

Emergent stem correction:

$$D = 352.7-65 = 287.7$$
$$t_1 = 352.7$$
$$t_2 = 125$$
$$K_1 = (0.00009)(287.7)(352.7-125)$$
$$= (0.00009)(287.7)(227.7)$$
$$= 5.8 \text{ deg F}$$

First approximation to true temperature

$$352.7 + 5.8 = 358.5^\circ\text{F}$$

Second calculation of emergent stem correction:

$$D = 287.7$$
$$t_1 + K_1 = 352.7 + 5.8 = 358.5$$
$$t_2 = 125$$
$$K = (0.00009)(287.7)(385.5-125)$$
$$= (0.00009)(287.7)(233.5)$$
$$= 6.0 \text{ deg F}$$

True temperature = 352.7 + 6.0 = 358.7°F
In this installation the external pressure effect is negligible.

ADVANTAGES AND DISADVANTAGES

49 Advantages. The advantages of liquid-in-glass thermometers are

(*a*) Available with wide variety of ranges, sensitivities, and accuracies.
(*b*) Simple to use.
(*c*) Calibration constant, except for drift in range span which can be measured readily by reference temperature check.
(*d*) Relatively inexpensive.
(*e*) Damage readily apparent, except for overranging at high temperatures.
(*f*) No auxiliary power supply required.

50 Disadvantages. The disadvantages of liquid-in-glass thermometers are

(*a*) Relatively fragile.
(*b*) Least reliable in superheated steam temperature range.
(*c*) Upper range limits do not include all temperatures encountered in Performance Test Code work.
(*d*) Not adaptable to remote reading.

REFERENCE

51

[1] James F. Swindells, "Monograph 90," National Bureau of Standards, Feb. 1965.

Copyright ASME International
Provided by IHS under license with ASME
No reproduction or networking permitted without license from IHS
Not for Resale

CHAPTER 6, FILLED SYSTEM THERMOMETERS

CONTENTS

	Par.
GENERAL:	
Scope	1
Definitions	2
PRINCIPLES OF OPERATION	4
CLASSIFICATION:	
General Classification	5
Subclassification	8
Description	12
Materials of Construction	28
CHARACTERISTICS:	
Maximum and Minimum Temperature	31
Range	36
Sensitivity	40
Accuracy	41
Temperature Compensation	42
Response	48
ACCESSORIES	53
APPLICATION AND INSTALLATION:	
Sources of Error	55
Essential Considerations	62
ADVANTAGES AND DISADVANTAGES:	
Advantages	67
Disadvantages	68
REFERENCES	69

GENERAL

Scope

1 The purpose of this chapter is to present information which will guide the user in the selection, installation and use of filled system thermometers.

Definitions

2 **A Filled System Thermometer** is an all metal assembly consisting of a bulb, capillary tube and *Bourdon tube*,* containing a temperature responsive fill. A mechanical device associated with the Bourdon is designed to provide an indication or record of temperature. See Fig. 6.1.

3 **A Bourdon** [1]** consists of a closed and flattened tube formed into a spiral, helix or arc, which changes in shape when internal pressure or volume changes are applied.

* In the interest of brevity, hereafter referred to as Bourdon.

** Numbers in brackets designate References at end of Chapter, [1].

PRINCIPLES OF OPERATION

4 The sensing element (bulb) contains a fluid which changes in physical characteristics with temperature. This change is communicated to the Bourdon through a capillary tube. The Bourdon movement provides an essentially linear pointer motion through mechanical linkages in some instruments. Bourdon motion is directly related to:

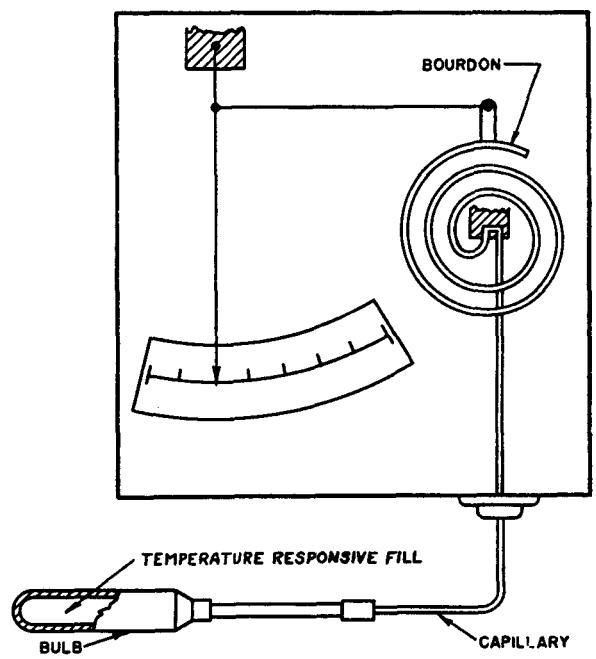

FIG. 6.1 FILLED SYSTEM THERMOMETER

(*a*) Volume change of a liquid within the bulb.
(*b*) Pressure change of a gas within the bulb.
(*c*) Vapor pressure change of a volatile liquid within the bulb.

Copyright ASME International
Provided by IHS under license with ASME
No reproduction or networking permitted without license from IHS
Not for Resale

CLASSIFICATION

General Classification

5 Filled system thermometers may be separated into two fundamental types: those in which the Bourdon responds to volume changes and those which respond to pressure changes. The systems that respond to volume changes are completely filled with a liquid. The liquid in the bulb expands with temperature to a greater degree than does the bulb metal, thereby producing a net volume change which is communicated to the Bourdon. An internal system pressure change is always associated with the Bourdon volume change, but this effect is not of primary importance.

6 The system that responds to pressure changes is either filled with a gas, or is partially filled with a volatile liquid. Changes in gas or vapor pressure with changes in bulb temperature are communicated to the Bourdon. The Bourdon will increase in volume with increase in pressure, but this effect is not of primary importance.

7 Based on these two fundamental principles of operation, filled system thermometers have been classified [2] as follows:

Volumetric Principle:
Class I, Liquid-Filled System
Class V, Mercury-Filled System

Pressure Principle:
Class II, Vapor-Filled System
Class III, Gas Filled System

Subclassification

8 Liquid-Filled Thermal System (Class I): A thermal system completely filled with a liquid (other than metals such as mercury) and operating on the principle of liquid expansion.

The system is usually compensated for ambient temperature effects either:

(*a*) With full compensation (Class IA), the compensating means being a second thermal system minus the bulb, or equivalent means of compensation. See Fig. 6.2.

(*b*) With compensating means within the case only (Class IB). See Fig. 6.3.

9 Vapor Pressure Thermal System (Class II): A thermal system partially filled with a volatile liquid and operating on the principle of vapor pressure. Four types are employed:

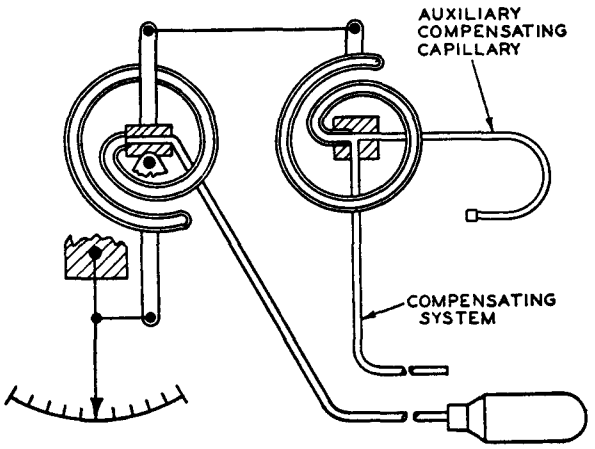

FIG. 6.2 FULLY COMPENSATED LIQUID, MERCURY OR GAS FILLED THERMAL SYSTEM—CLASS IA, IIIA, OR VA

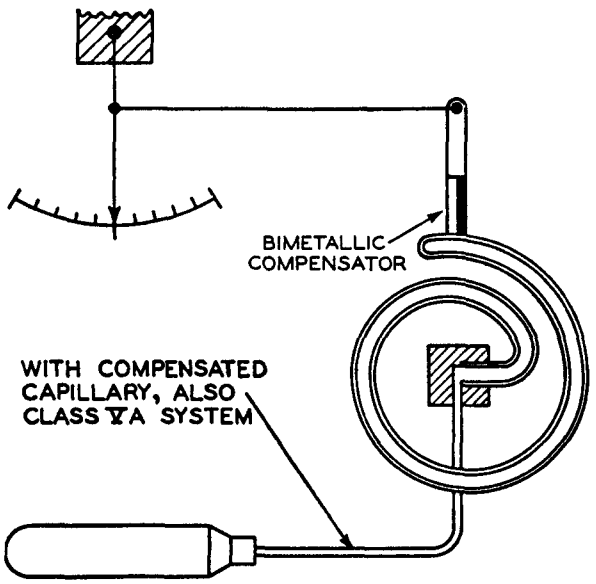

FIG. 6.3 CASE COMPENSATED LIQUID, MERCURY OR GAS FILLED THERMAL SYSTEM—CLASS IB, IIIB, OR VB

(*a*) Designed to operate with the measured temperature *above* the temperature of the rest of the thermal system (Class IIA). See Fig. 6.4.

(*b*) Designed to operate with the measured temperature *below* the temperature of the rest of the thermal system (Class IIB). See Fig. 6.5.

(*c*) Designed to operate with the measured temperature above *and* below the temperature of the

Copyright ASME International
Provided by IHS under license with ASME
No reproduction or networking permitted without license from IHS
Not for Resale

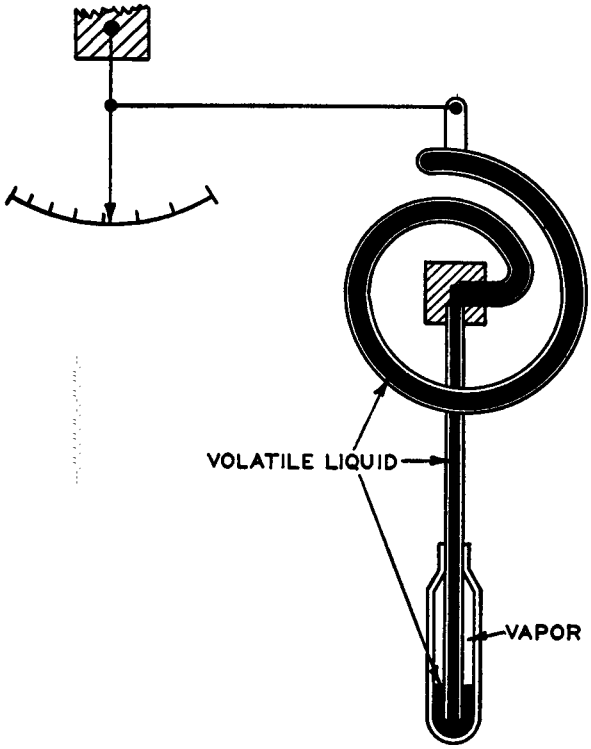

FIG. 6.4 VAPOR PRESSURE THERMAL SYSTEM–CLASS IIA

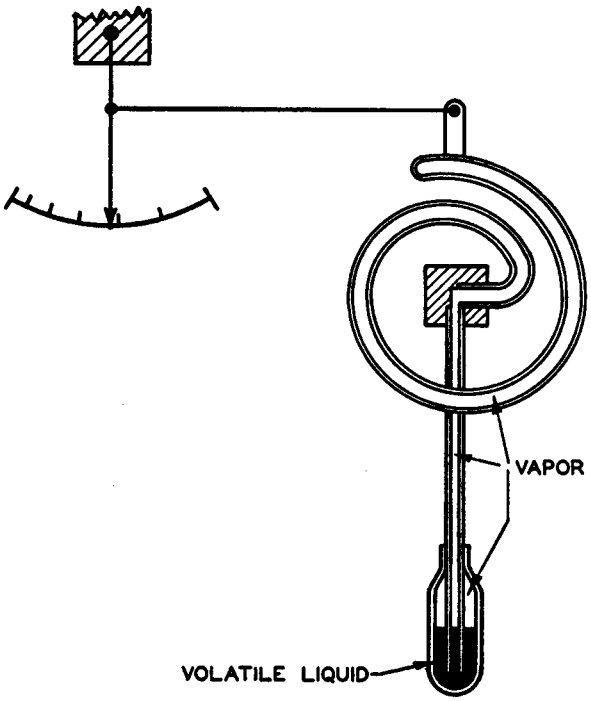

FIG. 6.5 VAPOR PRESSURE THERMAL SYSTEM–CLASS IIB

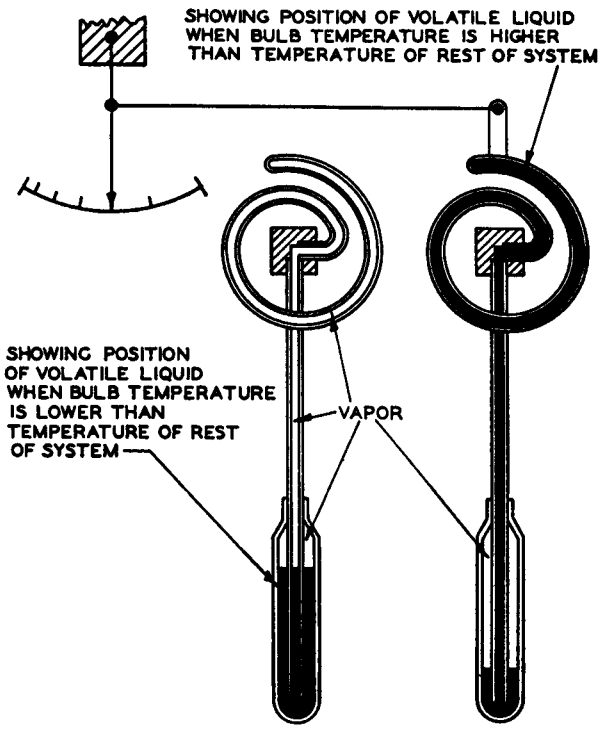

FIG. 6.6 VAPOR PRESSURE THERMAL SYSTEM–CLASS IIC

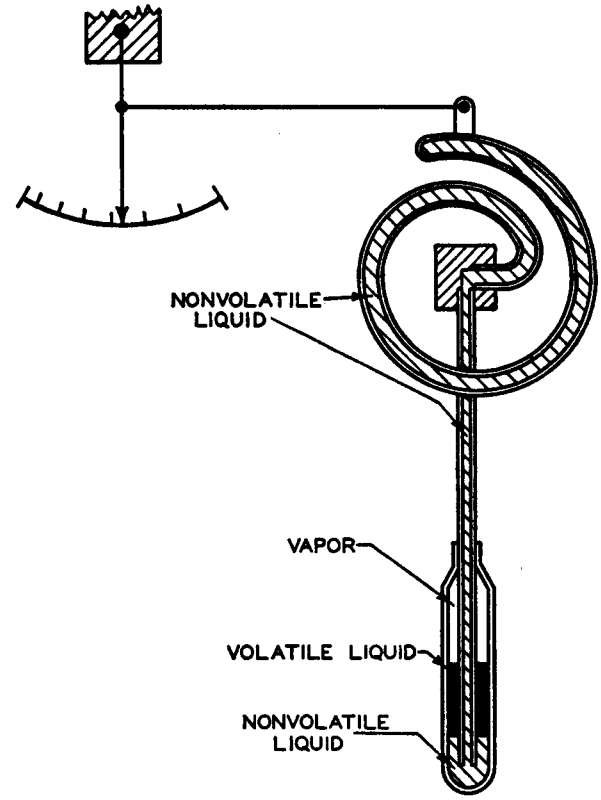

FIG. 6.7
VAPOR PRESSURE THERMAL SYSTEM–CLASS IID

Copyright ASME International
Provided by IHS under license with ASME
No reproduction or networking permitted without license from IHS
Not for Resale

Copyright ASME International
Provided by IHS under license with ASME
No reproduction or networking permitted without license from IHS

TABLE 6.1 COMPARISON OF THERMAL SYSTEMS

Operating Principle	Liquid Expansion				Pressure Change	
Type	Liquid Filled		Mercury Filled		Vapor Pressure	Gas Filled
Class	Class IA	Class IB	Class VA	Class VB	Class IIA, B, C & D	Class III A & B
Low temp limit	−300°F		−38°F. −65°F Hg-Th eutectic		−40°F	−400°F
High temp limit	600°F		1200°F	600°F	600°F	1500°F
Longest span	600 deg F		1000 deg F	600 deg F	300 deg F	1000 deg F
Shortest span	25 deg F		40 deg F		40 deg F	100 deg F
Bulb size—Long span	smallest		intermediate		intermediate	large
—Short span	intermediate		large		intermediate	large
Dial or chart divisions	Equal	Equal	Equal	Equal	Larger at range top (also equal with separate linkage)	Equal
Maximum standard capillary length (Approximate)	200 ft	15 ft	200 ft	25 ft	200 ft	200 ft
Capillary temperature compensation	Dual capillary and Bourdons	None	Compensated capillary or dual capillary and Bourdons	None	None necessary	Generally none, rarely, dual capillary and Bourdons
Case temperature compensation	Second Bourdon	Bimetal strip	Second Bourdon	Bimetal strip	None necessary	Bimetal strip; rarely a second Bourdon
Bulb elevation error	Negligible	Negligible	Generally small	Negligible	Frequently large	Negligible
Over-range capacity	Varies with length 200% to 0% range	100% of range	100% of range	100% of range	Generally small	Varies with range, up to 300% of range
Speed of response (see Fig. 8)	Slowest in water intermediate in air		Intermediate in water slowest in air		Fastest to intermediate	Varies widely with bulb diameter
Barometric errors	Negligible	Negligible	Negligible	Negligible	Usually small	Usually small

Note: Dimensions are to be used as a guide only and will vary in OD and length with manufacturer. Functional values also vary with manufacturer. For more detail, see Table 6.2

Not for Resale

rest of the thermal system (Class IIC). This type normally requires a larger sensitive portion than Class IIA or IIB. See Fig. 6.6.

(*d*) Designed to operate with the bulb temperature above, below and *at* the temperature of the rest of the thermal system (Class IID). See Fig. 6.7. In this type the volatile liquid is confined to the sensitive portion and a second relatively non-volatile liquid is used to transmit the vapor pressure to the expansible device.

10 Gas-Filled Thermal System (Class III): A thermal system filled with a gas and operating on the principle of pressure change with temperature change. The system is usually compensated for ambient temperature effects either:

(*a*) With a second thermal system minus the bulb, or equivalent means of compensation (Class IIIA). See Fig. 6.2.

(*b*) With compensating means within the case only (Class IIIB). See Fig. 6.3.

11 Mercury-Filled Thermal System (Class V): A thermal system completely filled with mercury or mercury-thallium eutectic amalgam operating on the principle of liquid expansion. The system is usually compensated for ambient temperature effects either:

(*a*) With full compensation (Class VA), the compensating means being a second thermal system minus the bulb, or equivalent means of compensation. See Fig. 6.2. The note of Fig. 6.3 shows an equivalent means of compensation.

(*b*) With compensating means within the case only (Class VB). See Fig. 6.3.

In the equivalent means of compensation, an invar wire is drawn through the capillary. Thus, the volume of mercury in the annular space between the wire and the inner wall of the capillary is very small compared with the mercury volume in the bulb. This reduces ambient temperature effects considerably since volumetric changes due to ambient temperature changes are reduced. A bimetallic element is used to compensate for mercury volume changes in the Bourdon which are caused by changes in case ambient temperature, and for any change in the modulus of elasticity of the Bourdon tube with temperature.

Description

12 Bulb Size. The bulb size of the various thermal systems varies greatly (approximately 100 to 1) depending upon system class, temperature span and capillary length. Table 6.2 provides a guide in determining the size of the bulb. Considerable variation in bulb size exists among the various manufacturers. The basic reasons for the variations in bulb size are briefly described below. Typical mercury filled thermometer bulbs are shown in Fig. 6.8.

13 Liquid-filled and mercury-filled systems (Class I and Class V), which operate on the principle of liquid expansion in the bulb, have a bulb internal volume which is inversely proportional to temperature span. Therefore, larger temperature spans will require smaller bulbs. Since the temperature span of a liquid-filled system (Class I) or a mercury-filled system (Class V) may vary by 25 to 1, the bulb size will vary accordingly. A few manufacturers have designed mercury thermometers in the 400 to 1200°F range with 3/8 in. bulb diameters and 3 in. bulb lengths.

14 The bulb size for all types of vapor systems (Class II) also varies greatly, but for different reasons. The pressure within the system to which the Bourdon responds is the vapor pressure at the interface of the liquid and vapor. The interface must always be located in the bulb. The fill will always be in a liquid state at the coolest parts of the system. The system must be filled so that the liquid in the bulb will not completely vaporize nor completely fill the bulb, under any conditions of bulb or ambient temperature.

15 The Class IIB system requires that liquid exist only in the bulb. Since the vapor density in the capillary and Bourdon is affected only slightly by ambient temperatures, the bulb may be very small, as indicated by the dimensions in Table 6.2. Whereas the bulb may be as small as illustrated, it is frequently supplied in a large size, in order to reduce the number of bulb sizes.

16 The Class IIA system bulb must be somewhat larger in order to accommodate the liquid expansion within the capillary and Bourdon resulting from ambient temperature variations. The standard bulbs of a particular manufacturer may be larger or smaller than specified in Table 6.2.

Copyright ASME International
Provided by IHS under license with ASME
No reproduction or networking permitted without license from IHS
Not for Resale

TABLE 6.2 APPROXIMATE BULB SENSITIVE DIMENSIONS

System Class	Fill	Outside Diameter, In.	Length, In.	Remarks
IA & B	Liquid	9/16	3	50 deg F span
IA & B	Liquid	3/8	2-1/2	275 deg F or greater span
IIA	Vapor	9/16	4	
IIB	Vapor	3/8	2	
IIC	Vapor	9/16	6	
IID	Vapor	9/16	4	
IIIA & B	Gas	7/8	10	Based on 75 ft. capillary
VA & B	Mercury	9/16	2-1/2	500 deg F or greater span
VA & B	Mercury	11/16	4	100 deg F span

Note 1: Dimensions vary between manufacturers and can often be reduced below those shown to meet particular requirements.
Note 2: When faster response is desired and space and strength requirements permit, a longer sensitive of a smaller diameter is generally available.

17 The Class IIC system bulb needs to accommodate the entire capillary and Bourdon volume when the bulb temperature becomes equal to the temperature of the capillary and Bourdon (See Fig. 6.6.) The bulb size therefore is generally larger than that of the Class IIA system; it is also dependent upon the capillary length.

18 The Class IID system bulb must have an internal trap of such dimensions that the volatile liquid will not enter the capillary under all values of ambient temperature (i.e., the trap must accommodate the non-volatile liquid expansion under all values of ambient temperature). See Fig. 6.7.

19 The gas-filled system (Class III) generally requires a large bulb in order to minimize errors caused by ambient variations on the capillary. This error is also increased as the span is reduced and as the bulb temperature is raised. Approximate bulb sizes for various temperature spans and capillary lengths are specified in Table 6.2. A further restriction based on the bulb temperature may be

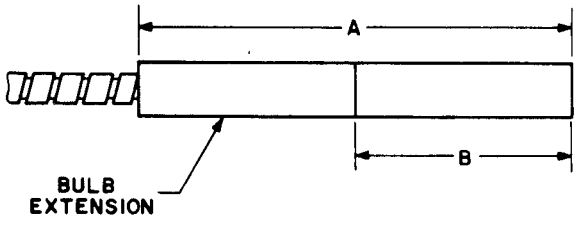

a. PLAIN BULB

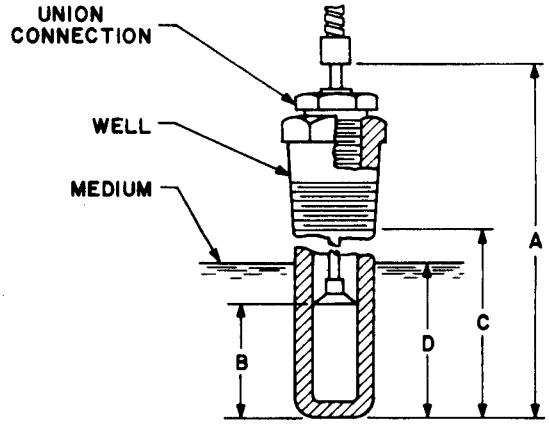

c. THREADED WELL (UNION BULB)

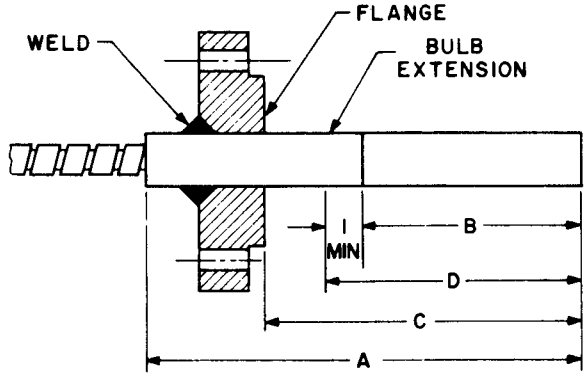

b. FLANGED BULB

KEY:
A – BULB LENGTH
B – SENSITIVE PORTION
C – INSERTION LENGTH
D – IMMERSION LENGTH

FIG. 6.8 TYPICAL MERCURY FILLED

Copyright ASME International
Provided by IHS under license with ASME
No reproduction or networking permitted without license from IHS
Not for Resale

obtained from the manufacturer. Several manufacturers have been able to design very small bulb gas thermometers. Bulb size in these designs is 3- to 3½-in. long and 3/8 in. in diameter. Temperature ranges vary from −40 to 180°F to 400 to 1200°F.

20 Overrange Protection. Overrange protection is defined as the maximum temperature to which the bulb of a filled system may be exposed indefinitely without damage to the system. It is usually expressed in per cent of temperature span above the upper limit of the range. A summary of extent of overrange protection for filled system thermometers of the various types is specified in Table 6.1.

21 The overrange protection of liquid systems (Class IA) varies with capillary length. Generally, it is in the region of 100 to 200 percent of the temperature span for short systems. For long systems, because the capillary volume generally approaches the bulb volume, the capillary volume change with ambient temperature change neutralizes the overrange possibilities of the Bourdon, thus reducing the overrange protection to essentially zero for systems 200 ft long.

22 Liquid systems (Class IB) generally are provided with overrange protection of 100 percent of temperature span. Some thermometers are provided with greater overrange protection, depending on the manufacturer.

23 In vapor pressure thermal systems (Class II), overrange protection is generally more limited than in other systems because of the increasing rate of vapor pressure rise with temperature rise. Typical vapor pressure temperature relationships are shown in Fig. 6.9. A specific overrange temperature for each range offered is usually specified by the manufacturer. This is generally appreciably less than 100 percent of temperature span. If the upper limit of range is near the critical point of the fluid fill, the overrange protection may be extended because of the fill being a vapor above the critical point. Under some limited conditions, it is possible to fill the system so that all of the liquid will be exhausted from a bulb at a bulb temperature above the instrument range, in which case the safe overrange temperature can be increased.

24 The nonlinear vapor pressure-temperature relationship is an advantage where the user desires more reading sensitivity toward the top of range.

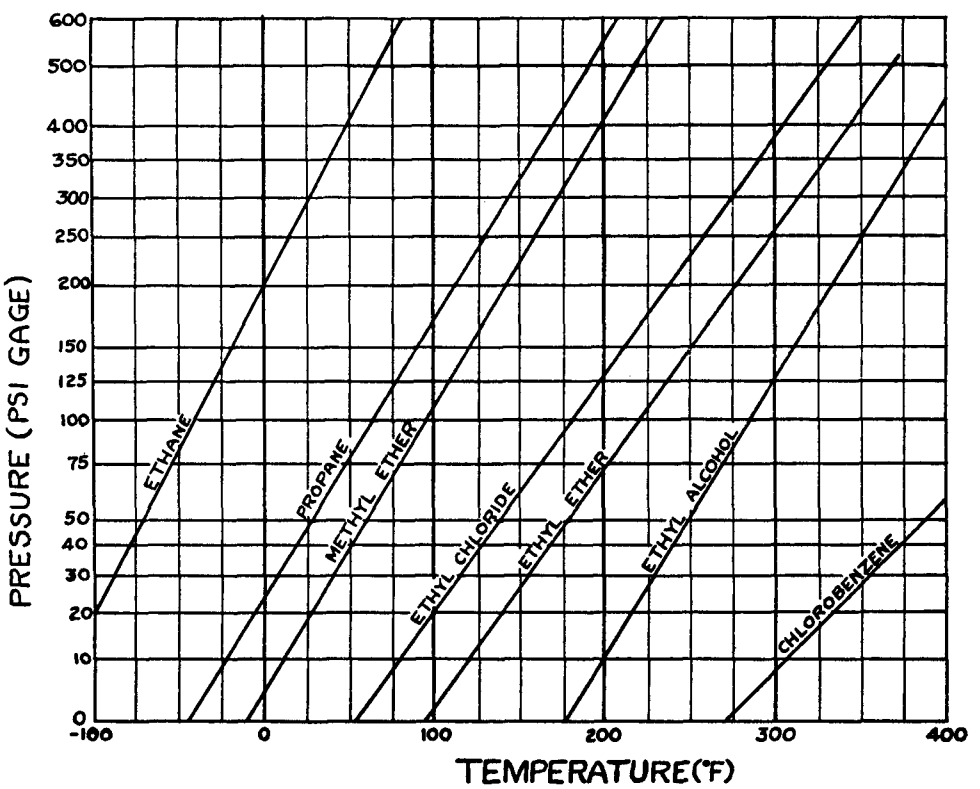

FIG. 6.9 VAPOR PRESSURE–TEMPERATURE CURVES

Copyright ASME International
Provided by IHS under license with ASME
No reproduction or networking permitted without license from IHS
Not for Resale

25 The overrange protection of a gas system (Class III) will be reduced for short range temperature spans because of the higher internal pressures of these systems. Since the protection offered varies considerably for various system ranges and various manufacturers, the overrange protection should be obtained from the manufacturer.

26 Mercury systems (Class V) are normally provided with a minimum of 100 percent of temperature span overrange protection; with some manufactures exceeding this limit. A top limit of 1000°F is also generally specified for overrange temperature.

27 **Bourdons.** The Bourdon motion is normally amplified by a mechanical linkage or gear system to drive a pointer for temperature indication or to drive a pen for recording the temperature signal. A Bourdon may be used without amplification in indicating instruments. Although Bourdons are generally used in industrial filled system thermometers, other devices such as bellows and diaphragms are frequently used. In the previously mentioned small bulb gas designs, the Bourdon is in the form of a coil. The conventional links and gears used in most designs to transmit Bourdon motion to the pointer are eliminated. Pointer drive is either direct or accomplished through magnetic coupling. One mercury design completely eliminates the Bourdon. In this design, a bulb, capillary and piston-cylinder head make up the thermal system. Piston motion in the cylinder is transmitted directly to the linkage in the case which rotates the pointer. This design is unique in that thermal elements and indicators can be interchanged. Thus, a faulty case can be replaced without removing the thermometer bulb. In conventional designs, the bourdon is in the case. Thus, any failure of the indicating mechanism causes the entire instrument to be replaced since the thermal system cannot be severed without destroying it.

Materials of Construction

28 **Bulb Materials.** Among standard bulb materials as listed in most manufacturers' catalogs, are bronze, copper, steel, SAE alloy steels, and Types 304, 347 and 316 stainless steel. Copper and bronze are vulnerable to mercury attack and accordingly are not available with Class V systems. Optional materials, such as nickel, Monel, Inconel, Hastelloy, and silver are available. Some manufacturers supply bulbs made of externally finned tubing designed to increase the response to temperature changes.

29 **Well Materials.** Standard bushing and well materials are generally confined to brass, steel and Types 304 and 316 stainless steel. Optional material, such as aluminum, cast iron, nickel, Monel, Inconel, Hastelloy, and silver are also available.

30 **Capillary Materials.** The capillary is commonly of a small outside diameter (approximately 1/16 in.), protected by a flexible armor of bronze, plated steel, stainless steel, or by an armor covered with a plastic (such as polyethylene) for corrosion resistance. Capillary materials normally consist of copper or stainless steel. Stainless steel (Types 304 or 316) and Inconel capillaries of 1/8 in. OD and copper capillaries of 3/16 in. OD are frequently employed without armor protection.

CHARACTERISTICS (SEE TABLE 6.1)

31 **Maximum and Minimum Temperatures.** The minimum temperature of liquid and mercury-filled systems (Class I and V) is limited by the freezing point of the fluid fill.

32 The organic liquids employed in Class I systems freeze between −100 and −300°F, depending upon the liquid used. The maximum temperature of the organic liquid system (Class I) is limited by the upper temperature at which the organic liquid remains chemically stable, which is approximately 600°F.

33 The mercury system (Class V) is limited by its freezing point to −38°F. A mercury-thalium eutectic amalgam is frequently used to lower the minimum temperature to −65°F. The upper temperature of a mercury-filled system is not limited by chemical instability, but is usually limited to 1000°F because of a rapid increase in vapor pressure above this temperature. However, some manufacturers supply systems to 1200°F, and one special device is operated up to 1500°F.

34 The minimum temperature of the Vapor Pressure System (Class II) is limited by the filling materials. Materials are available for temperatures as low as −430°F. The maximum temperature is limited by chemical instability of organic liquids to approximately 600°F.

35 The minimum temperature of the Gas System (Class III) must be above the critical temperature

Copyright ASME International
Provided by IHS under license with ASME
No reproduction or networking permitted without license from IHS
Not for Resale

of the gas employed, which for commonly used helium is −451°F. The upper temperature is usually limited to 1000°F, but gas systems have been made to operate successfully up to 1500°F.

36 Range. The minimum range of the organic liquid system (Class I) is limited by maximum bulb size to approximately 25 deg F. Because of nonlinearity of expansivity and compressibility of the organic liquids employed, the maximum range is frequently limited to 200 to 400 deg F, because of differences in manufacture so that a specified accuracy may be met with linear dials or charts.

37 The range of a vapor system (Class II) is limited by low and high temperatures of −430 and 600°F, respectively, for the reasons discussed in Par. 34. However, the nonlinear vapor pressure-temperature relationship is accentuated by greater ranges and the range is therefore normally limited to approximately 250 deg F.

38 The minimum range of a mercury system (Class V) is limited by maximum bulb size to approximately 50 deg F. For a mercury system the bulb size is larger for a particular comparative range than it is for an organic liquid system, because the expansion rate of mercury is less than that of organic liquid by a factor of approximately six. The maximum range is limited only by the upper useful temperature, generally 1000°F, and the freezing point of −38°F. Mercury filled system thermometers are made, however, with ranges as low as −40 to 180 deg F and as high as 400 deg F to 1200 deg F.

39 Because the pressure within a gas system (Class III) essentially follows Charles' Law, (i.e. absolute pressure is proportional to absolute temperature) it is characteristic of this system that the shorter the range the higher will be the internal system operating pressure. This condition limits the minimum range to approximately 120 deg F. The maximum range is limited only by the upper temperature, usually 1000°F, although longer ranges generally require larger bulbs to provide an adequately linear output. Small bulb and large bulb gas thermometers capable of operating up to 1200°F are available. A nonlinear scale is used in some designs to eliminate the nonlinear output effect.

40 Sensitivity. The Bourdon of a filled system will respond to the smallest measurable change in bulb temperature. Therefore, the output for small temperature changes is affected only by friction or loose fits in the mechanical apparatus which transforms Bourdon motion into pointer or pen motion. The backlash in mechanical gearing and links usually is greater than 0.1 percent; thus, the sensitivity may be on the order of 0.25 percent of range span. In the designs where mechanical linkages are reduced or eliminated, sensitivity may be affected by highly viscous oil which is put on the Bourdon coil to damp shock and vibration effects. Sensitivity in these designs is no better than above.

41 Accuracy. Filled system thermometers are normally regarded as 1.0 percent instruments. This means that under most environmental conditions of case or capillary ambients the error will not exceed 1 percent of temperature span. However, many instruments are calibrated to higher accuracy and in indoor applications the maximum error is frequently specified as 0.5 percent of temperature span. Accuracy may be only 2 or 3 percent when thermometers are used in environments where the case and capillary temperature vary considerably from usual room temperature (e.g., case or capillary temperature can be as low as 60°F and as high as 160°F in some power plant applications). The reduction of accuracy is caused by the inability of the compensation devices to completely compensate for ambient temperature changes. Direct reading thermometer cases, which are attached directly to the bulb, are exposed to heat conducted along the thermometer stem and also to heat radiated by unlogged pipes. Capillaries wound around boiler casings are also subjected to high ambient temperatures. Thermometers used outdoors could be subjected to very low ambient temperatures. Accuracy is also affected by mechanical backlash and mechanical and fluid friction.

42 Temperature Compensation. Since the capillaries and Bourdons as well as the bulbs of thermal systems are filled with actuating fluid, these portions of the system are sensitive to ambient temperature. Therefore, system errors will result because of ambient temperature variations unless compensation means are employed.

43 The vapor-filled system (Class II), as an exception, is not subject to errors from the fluid fill. The only temperature error observed in this system is of small magnitude; it is caused by change of elastic modulus of the Bourdon material with temperature, and is usually ignored.

44 The liquid-, gas- and mercury-filled systems (Class I, III and V) are provided with full compen-

Copyright ASME International
Provided by IHS under license with ASME
No reproduction or networking permitted without license from IHS
Not for Resale

sation (the capillary and Bourdon compensated) by means of an auxiliary system less the bulb (see Fig. 6.2). The capillary and Bourdon volumes of the auxiliary system are made essentially equal to the corresponding volumes of the primary system. This arrangement permits the erroneous response to be opposed by an equal erroneous response, thus providing full temperature compensation. These systems with full compensation are classified by SAMA standards as IA, IIIA, and VA systems, respectively (see Pars. 8, 10 and 11). The error tolerance of these systems is specified by the manufacturer and is usually equal to or less than ±1 percent of range for an ambient temperature change of ±50 deg F and for a capillary length of 100 ft (i.e., 0.0002 percent of range per ft per deg F). Other methods of compensation, as discussed previously, are also used and are probably more common. The error tolerance of these systems should be equal to or less than 1 percent of range span for an ambient temperature change of ±50 deg F and for a capillary length of 100 ft or less.

45 Because the capillary error of a gas system (Class III) is reduced as the bulb size is increased, the Class IIIA system which has full compensation is rarely built. Gas-filled systems are therefore generally limited to the Class IIIB type, where only the case is compensated.

46 The mercury system with full compensation (Class VA) is frequently supplied with a single capillary which is continuously temperature compensated along its entire length (see Fig. 6.3). This is achieved by employing a capillary with a precision bore enclosing a precision drawn Invar wire so that the expansion of the Invar wire and mercury equals the expansion of the surrounding capillary.

47 The liquid, gas, and mercury systems with case compensation only (Classes IB, IIIB and VB) are frequently employed because of the simplicity of construction. The capillary bore size is reduced to a point where system response is not seriously affected in order to minimize the capillary temperature error. The Bourdon of these systems is compensated by means of a bimetallic strip (see Fig. 6.3). These systems are employed when the capillary length may be sufficiently short or when the ambient temperature range is sufficiently small that the capillary error may be ignored. In practice, the capillary error of a liquid-filled system (Class IB) is in the range of 0.003 to 0.005 percent range per ft per deg F, depending upon the manufacturer. The length of these systems is normally limited to 20 ft. Likewise, the capillary error of a mercury-filled system (Class VB) is in the range of 0.0008 to 0.0016 percent range per ft per deg F, and the length is normally limited to 50 ft. The capillary temperature error of the gas system (Class IIIB) varies with length, range and bulb size. It is therefore recommended that this information be obtained from the manufacturer.

48 Response. The response of a thermal system is usually determined by the response of the bulb because the lag in the capillary is generally equal to or less than one second. The 63 percent response time for the bulbs of the various types of thermal systems in water, with a velocity of 2.5 ft per sec, is approximated by the curves of Fig. 6.10. The 63 percent response time in air at various velocities for typical bulb sizes is given by the nomograph of Fig. 6.11. See Chapter 1 for installation procedures to obtain optimum response.

49 A bulb will respond faster if the following three fundamental design factors are employed:

(*a*) Increase the external area relative to the internal volume.
(*b*) Lower the heat capacity.
(*c*) Increase the thermal conductivity of the bulb walls and internal fill.

The gas system (Class III) is frequently the most favorable because the bulb can usually be made with a relatively thin wall and the heat capacity of the internal gas is almost negligible. However, the large bulb size frequently required tends to offset this natural advantage. The small bulb gas thermometers are somewhat slower in response than conventional larger bulb gas thermometers or mercury filled thermometers.

50 The vapor systems (Class IIA, IIB, and IIC) have almost equally favorable response because the heat capacity of the volatile fluids employed is low and the thermal conductivity high. This is particularly true for small temperature changes because under these conditions condensation and evaporation of the fill will take place on the internal bulb walls. The (Class IID) vapor system has somewhat slower response because of the presence of the internal bulb trap and in some cases, also because of the increased viscosity of the non-volatile liquid fill.

Copyright ASME International
Provided by IHS under license with ASME
No reproduction or networking permitted without license from IHS
Not for Resale

51 The liquid and mercury systems (Classes I and V) have the slowest response because of the increased mass and poorer conductivity of the fluid fill. Whereas the liquid system (Class I) is slower than the mercury system (Class V) for any specific bulb diameter, the fact that the bulb size of the former will be smaller for a particular range, frequently more than offsets this disadvantage. Some manufacturers incorporated fin-like copper disks on liquid-filled bulbs to enhance heat transfer.

52 Capillary bulbs with outside diameters of 1/16 to 3/16 in. are sometimes employed to provide rapid response. Response is nearly directly proportional to bulb outside diameter. These bulbs are frequently coiled by the manufacturer (preformed capillary bulb) providing compactness for installation. A typical bulb form is shown in Fig. 6.12. A long capillary bulb (up to 200 ft in length) is sometimes left uncoiled to measure average temperature along its installed length. Class I, III, and V systems may be employed in this manner.

ACCESSORIES

53 The Bourdon motion of filled system thermometers is usually amplified by a simple linkage as shown in Fig. 6.1, in order to drive the pointer of an indicator or the pen of a recorder. In dial gages, greater angular motion of the pointer, usually 270 deg angular displacement, is achieved by a "movement." The most common movement employs a geared sector to drive a pinion to achieve angular amplification.

54 In temperature transmitters the temperature signal is converted to a pneumatic or electrical signal and this signal in turn is communicated to a recorder or other readout device. The transmitters provide the means of transmitting temperature information over long distances. In the case of the pneumatic transmitter the Bourdon is usually replaced by a diaphragm which will exert a force responsive to bulb temperature. This force in turn is balanced by a feedback force of a pneumatic

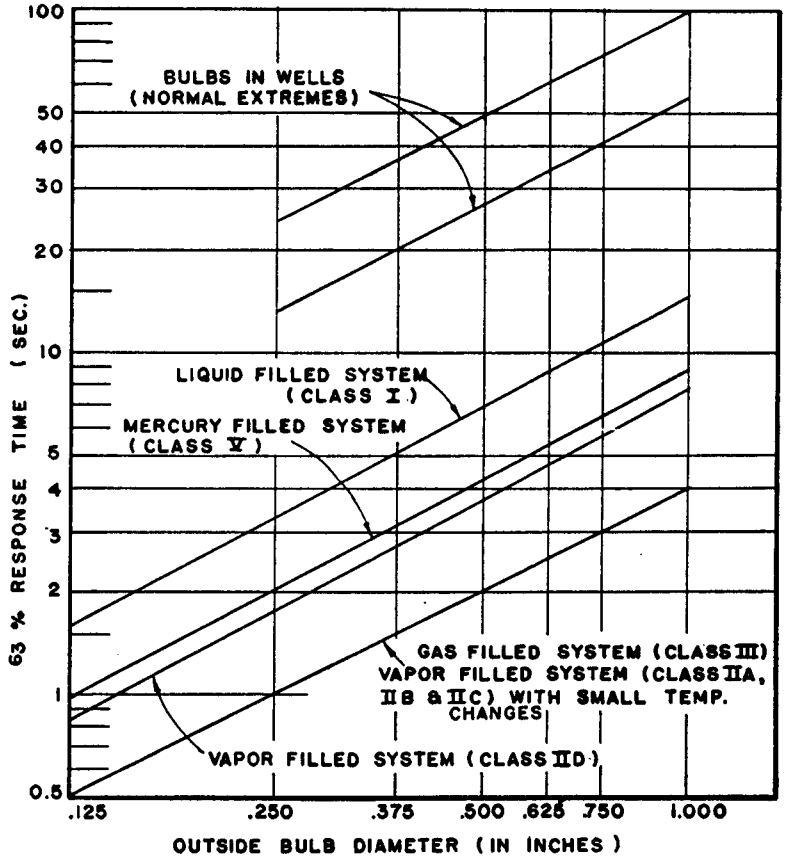

FIG. 6.10 BULB RESPONSE VERSUS BULB OD IN WATER
(Velocity of 2.5 fps)

Copyright ASME International
Provided by IHS under license with ASME
No reproduction or networking permitted without license from IHS
Not for Resale

servo, the feedback force being generated by the transmitter pressure. Similarly, in an electrical transmitter the filled system force is balanced by a force which is generated by an electrical current. In other electrical transmitters the Bourdon motion directly operates the core of a differential transformer for a-c output or the force from a Bourdon actuates a strain gage for d-c output.

APPLICATION AND INSTALLATION

Sources of Error

55 Zero Shift Error. Filled system thermometers are subject to mechanical abuse during shipment, which may cause an error in the calibration. The user, therefore, should check the instrument calibration and make corrections. A calibration error associated with shipment is usually confined to a "zero" shift, in which the entire range is shifted up or down, which may be corrected by a simple screw adjustment. However, a severe shock could cause a permanent set in the Bourdon or misalignment of the linkage. In this case, the change in calibration would not necessarily be uniform over the entire range.

56 Conduction and Immersion Error. The bulb of a filled system thermometer must be completely immersed in the medium in which the temperature is being measured. If this is not done, a significant portion of the filling medium volume can be at a different temperature than that which is being measured. Errors due to improper immersion can be extremely large. Actually, the bulb should be immersed so that not only the filling fluid reservoir is immersed but also a sufficient amount of the bulb extension to prevent heat conduction to or from the sensitive portion. The amount of extra immersion varies as the heat transfer and temperature environment varies. For a thermometer with a 3-in.

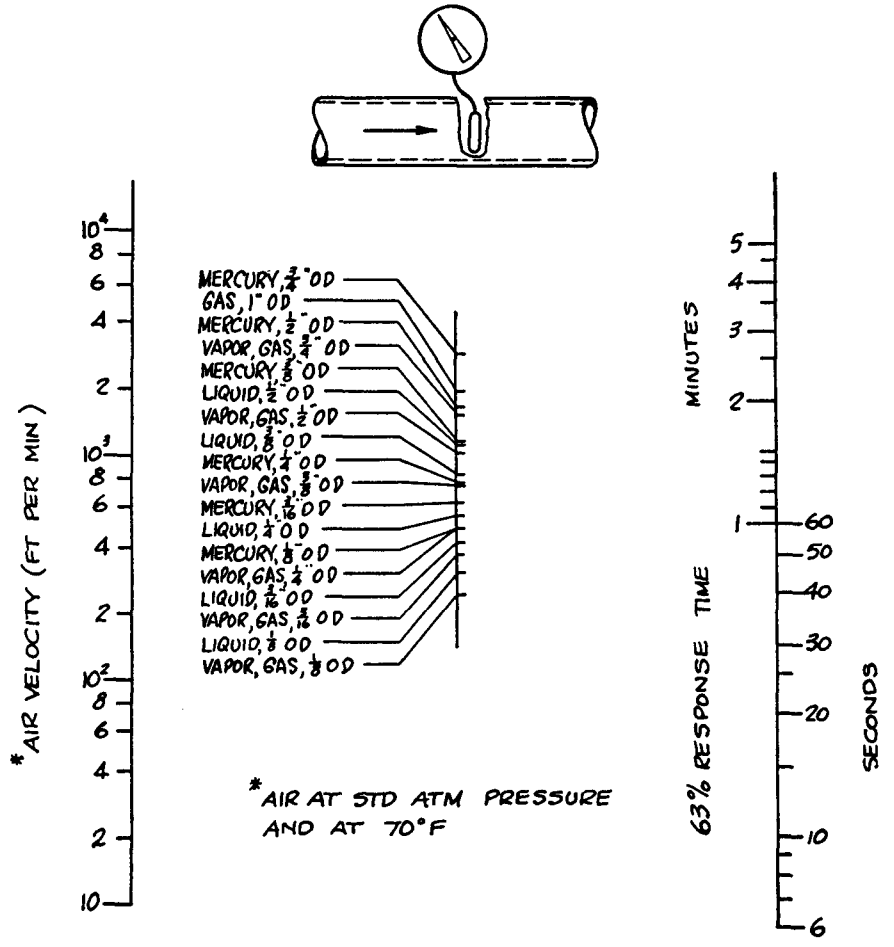

FIG. 6.11 BULB RESPONSE RATE IN AIR AT VARIOUS VELOCITIES

Copyright ASME International
Provided by IHS under license with ASME
No reproduction or networking permitted without license from IHS
Not for Resale

sensitive portion length and being used to measure temperature as high as 1000°F, for example, the bulb should be immersed about 5 in. Heat transfer from unimmersed portions of the thermometer should be reduced when measurements are being made in a medium having low heat transfer capabilities. The entire sensitive portion should be immersed in the flowing fluid when thermometers are used in forced convection applications.

57 Capillary Immersion Error. The capillary of all system types except vapor systems (Class II) is temperature sensitive. Dual capillary systems frequently are used in liquid systems (Class IA) and compensated capillary is used in mercury systems (Class VA). These compensating means are imperfect and the instrument output reading will vary with length of capillary immersion. If the immersion length is greater than 8 in., the immersion length should be specified to the manufacturer or the instrument should be adjusted by the user under the conditions of the application. Small bulb liquid filled thermometers are more affected by capillary immersion than larger bulb designs, e.g., on a mercury filled thermometer with a 3-in. by 3/8-in. bulb and a range of 400 to 1200°F, no more than 2 in. of capillary should be immersed.

58 Bulb Elevation Error. When the Bourdon elevation of a liquid or mercury system (Class I or V) is changed relative to the bulb, a pressure head caused by the column of the fluid fill is generated within the system. This pressure redistribution causes a small volume change of the fluid and of the bulb and capillary thereby causing a system error. If the bulb is to be elevated more than 25 ft above the case, it is desirable for the manufacturer to know the above elevation to increase the pressure of the system so that the bulb pressure will not drop to zero after installation.

59 The elevation error is nonexistent in a gas system (Class III).

60 If the Bourdon is above the bulb in a vapor system (Class IIA or Class IID) the pressure within the Bourdon equals the vapor pressure in the bulb minus the liquid pressure head in the capillary. This means that the bulb elevation error is equal to the ratio of the liquid head to the internal vapor pressure change across the temperature span. This further confirms that it is advantageous for the manufacturer to provide systems having a relatively large internal pressure. If the bulb elevation relative to the case is 20 ft, it is advisable for the user to specify this elevation or depression to the manufacturer so that he will calibrate the instrument accordingly. The vapor system (Class IIC) will have liquid within the capillary only over part of the range span and is, therefore, not recommended when the bulb and case are at appreciably different elevations. The instrument cannot read correctly for bulb temperatures both above and below the capillary case temperature.

61 Barometric Error. This error is essentially non-existent for systems operating on the volumetric principle, i.e., for the liquid-filled system (Class I) and the mercury-filled system (Class V). Vapor systems (Class II) and gas systems (Class III) operating on the pressure principles are sensitive to barometric pressure changes by the ratio of barometric pressure change to the internal pressure change corresponding to the range. These systems therefore are designed to have a minimum pressure change of 100 psi for the range of the thermometer. Since the maximum barometric pressure change is approximately ±0.4 psi, this error will be equal to or less than 0.4 percent of range.

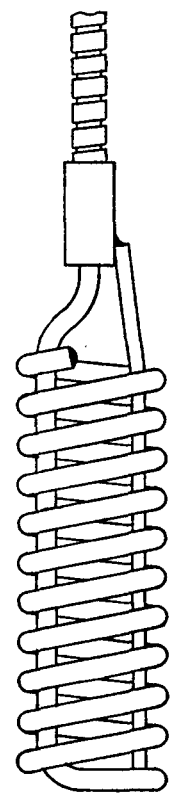

FIG. 6.12 PREFORMED CAPILLARY BULB

Copyright ASME International
Provided by IHS under license with ASME
No reproduction or networking permitted without license from IHS
Not for Resale

Essential Considerations

62 A thermal system is generally installed in a vessel by means of a union connection, a flange, or combination of union connection and flange. See Fig. 6.13.

63 Form 1 is employed when it is desired to attach to the equipment by means of a bushing or flange (in which case the bulb is exposed) or when it is desired that the bulb be protected by insertion into a well. If it is not necessary to have the union connection adjustable along the extension, the union is attached to the extension by soldering, brazing or welding to provide a pressure-tight joint. However, when it is necessary to have the union adjustable along the extension, particularly when mounting in a bushing to provide a pressure tight seal, the union connection is provided with an additional pressure seal as shown in Fig. 6.13.

64 Extension stems may be provided between the bulb sensitive portion and the union in Form 2 or between the external threads of the bushing or well and the hex nut. The external threads of bushings and wells have been standardized as ½ NPT, ¾ NPT and 1 NPT.

65 A relatively inexpensive mounting into equipment where pressure tightness is not important is that illustrated by Form 3. The flange is generally split so that it may be attached to or removed from the completely fabricated thermal system.

66 The pressure rating of the fittings is specified by the manufacturer and is generally 100 psig. If higher ratings are necessary special fittings must be supplied. The well ratings follow no established code. The manufacturer's well ratings will vary from 1000 to 5000 psi, depending upon material and design.

ADVANTAGES AND DISADVANTAGES

67 Advantages

(*a*) System construction is rugged. Amount of upkeep is generally minor.
(*b*) Low initial cost.
(*c*) Instrument can be located up to 250 ft from point of measurement.
(*d*) Instrument needs no auxiliary power supply unless an electric chart drive is employed.

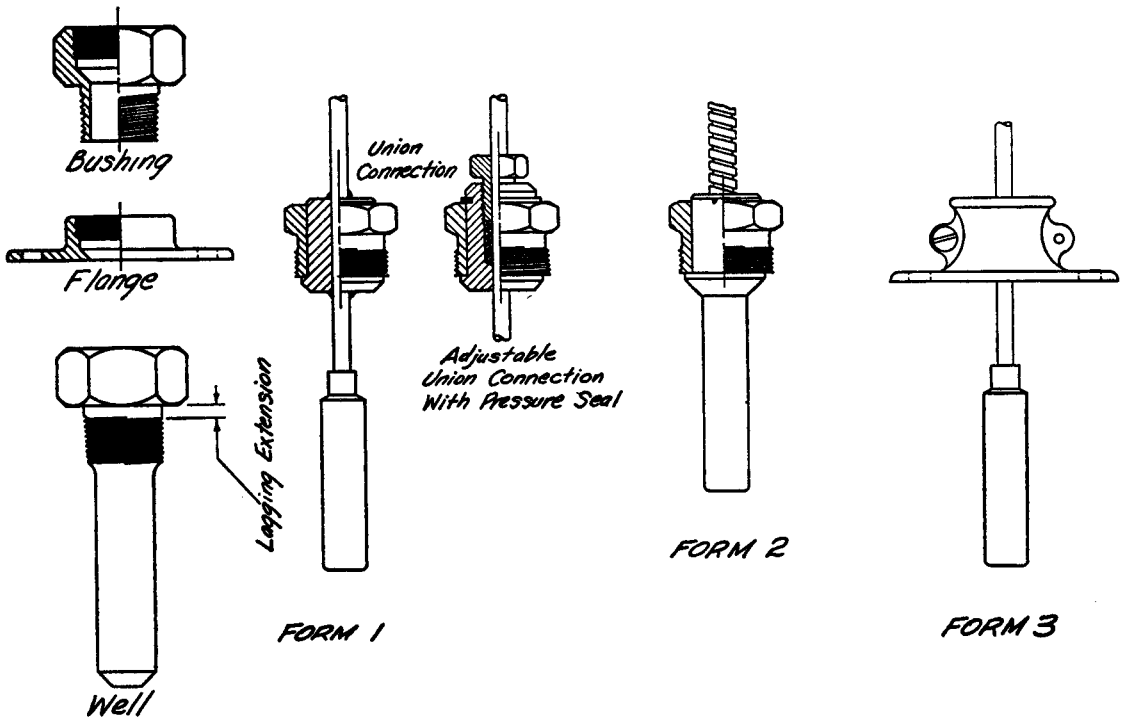

FIG. 6.13 ATTACHMENT OF THERMAL SYSTEMS TO VESSELS.

Copyright ASME International
Provided by IHS under license with ASME
No reproduction or networking permitted without license from IHS
Not for Resale

68 Disadvantages

(*a*) Bulb size may be too large for some applications.
(*b*) Minimum ranges are limited.
(*c*) Maximum temperature is limited.

REFERENCES

69 In the text Reference numbers are enclosed in brackets, thus [1].

[1] ASME Paper 53-IRD-1, "Bibliography of Bourdon Tubes and Bourdon-Tube Gages," which gives reference to 142 papers on this subject.
[2] Scientific Apparatus Makers of America (SAMA) Standard PMC 6-10-1963.

An additional suggested reference is: "Process Instruments and Control Handbook," Douglas M. Considine, Section 2, McGraw-Hill Book Co. N.Y. 1957.

Copyright ASME International
Provided by IHS under license with ASME
No reproduction or networking permitted without license from IHS
Not for Resale

CHAPTER 7, OPTICAL PYROMETERS

CONTENTS

	Par.
GENERAL:	
Scope	1
Definitions	2
PRINCIPLES OF OPERATION	8
CLASSIFICATION:	
Description	12
Materials of Construction	22
CHARACTERISTICS:	
Range	23
Precision	25
Accuracy	27
ACCESSORIES:	31
APPLICATION AND INSTALLATION:	
General	32
Sources of Error	47
Essential Considerations	63
Treatment of Data	65
ADVANTAGES AND DISADVANTAGES	66
REFERENCES	68

GENERAL

Scope

1 The purpose of this chapter is to present information which will guide the user in the selection, installation, and use of optical pyrometers.

*The nomenclature used here is consistent with that prescribed in the International Lighting Vocabulary. Some confusion in terminology exists in the literature, in which a number of authors use the term "emittance" to distinguish between the emissivity as defined above and the emissivity of an ideally flat surface of the same material. In that usage, emissivity is assumed to be an intrinsic property of the material, and is taken to be the limiting value of emittance as the effects of surface roughness are reduced to zero. The term "emittance," as just defined, has not been accepted by standards-setting organizations primarily because of its similarity to the term "radiant emittance," which is defined to be radiant power per unit area emitted from a surface. In the terminology used herein, no distinction is made between these two definitions of "emissivity" and "emittance"; values of "emittance" reported in the literature and defined in the manner described above are treated as being interchangeable with the values of emissivity using the definition in the above tabulation.

Definitions

2 **An Optical Pyrometer** consists of a *telescope*, a calibrated *lamp*, a *filter to provide for viewing nearly monochromatic radiation*, a *readout device*, and usually an *absorption glass filter*. The *spectral radiance* of a body whose temperature to be measured is compared to that of a standard source of radiance. Optical pyrometers are distinguished from other similar instruments in that two sources (images) of *equal radiance* are compared.

3 **Radiance** is the amount of energy radiating per unit time, per unit solid angle in a particular direction, per unit projected area of a source. *Spectral radiance* is radiance per unit wavelength interval at a particular wavelength; total radiance is spectral radiance summed over all wavelengths.

4 **A blackbody** is one that absorbs all radiation incident upon it, *reflecting* or *transmitting* none; the spectral radiance of a blackbody is a known function of its absolute temperature.

5 **Emissivity*** is the ratio of the radiance of a body to that of a blackbody at the same temperature. Total emissivity refers to radiation of all wavelengths, and monochromatic or *spectral* emissivity refers to radiation of a particular wavelength. Total emissivity is the average value of spectral emissivity weighted with respect to the blackbody distribution and summed over the entire spectrum.

6 **The spectral radiance temperature** of a source is the *temperature of a blackbody having the same spectral radiance* as the source, at a specified wavelength (approximately 0.65 μm, in the case of optical pyrometry). It has also been commonly known in the past as the *brightness temperature*, or (currently) as the *luminance temperature* when the eye is used as the sensor.

Copyright ASME International
Provided by IHS under license with ASME
No reproduction or networking permitted without license from IHS
Not for Resale

7 The *target* is the *source of radiation* whose temperature is to be measured, *as seen by the optical pyrometer.*

The calibration of an optical pyrometer is based on the radiance of a blackbody at the temperature at which pure gold freezes (or melts), and its calibration at other temperatures is in terms of blackbody radiation; the temperatures it indicates, called "radiance temperatures," must be corrected for the effect of the emissivity of the target to obtain the target temperature.

PRINCIPLES OF OPERATION

8 Thermal Radiation. The operation of an optical pyrometer depends upon the phenomenon that a body (most noticeably at elevated temperature) emits radiation at all wavelengths, the intensity and spectral distribution of which bear a definite relation to the absolute temperature of the body. The temperature of a body may be determined from a measurement of its radiance. This measurement may involve the total radiance or the spectral radiance; in the case of optical pyrometers, radiance is measured in the visible portion of the spectrum, conventionally at a (red) wavelength of about 0.65 μm. However, in general, the radiance depends not only on the temperature of the source, but also on the particular material constituting the source, and on the character of its surface roughness. Thus, glowing carbon radiates approximately three times as much power per unit area in the visible red portion of the spectrum as glowing platinum when both are at the same temperature. This is technically expressed by the statement that the emissive power or emissivity of carbon is approximately three times that of platinum in the neighborhood of 0.65 μm.

9 Blackbody Radiation. Kirchhoff's law states, in effect, that the emissivity of a surface is numerically equal to its absorptivity, a condition that guarantees that the surface can exist in thermal equilibrium with its surroundings. A perfect absorber absorbs all radiation incident upon it, reflecting nothing; such a surface is said to be black. A perfect absorber must also be a perfect emitter; a surface having the highest theoretically possible emissivity is therefore known as a blackbody radiator, or simply as a blackbody. By definition, the emissivity of a blackbody is unity. For the unique case of a blackbody radiator, the spectral distribution of radiant energy as a function of its temperature is known exactly, and is described as follows:

Planck's Radiation Law

$$N_{b\lambda} = \frac{C_1 \lambda^{-5}}{e^{C_2/\lambda T} - 1} \qquad (1)$$

where the index of refraction of the surrounding medium is assumed to be unity, and

$N_{b\lambda}$ = spectral radiance of a blackbody at wavelength λ

C_1 = a constant in the Planck radiation law

C_2 = 0.014388 m·K

λ = wavelength of radiant energy, in meters

T = absolute temperature, in kelvins

e = base of the natural or Napierian logarithms

The function of the optical pyrometer is to determine the ordinate $N_{b\lambda}$ of the Planck radiation distribution; at a (nearly) constant wavelength, $N_{b\lambda}$ becomes a measure of T. The Planck radiation distribution is illustrated in Fig. 7.1.

10 A blackbody is experimentally realized by uniformly heating a hollow enclosure and observing the radiation from a small opening in the wall of the enclosure. The intensity of the radiation emitted from this opening depends almost entirely on the temperature of the walls, and almost negligibly on the material of which the walls are constructed. Design considerations are treated under "Practical Blackbodies" (Par. 35).

11 Wien's law is an approximation of the Planck radiation law; it is mathematically much more convenient than the Planck function and is ordinarily sufficiently accurate to be used in calculations for calibration and application of optical pyrometers. The error due to using the Wien function instead of the Planck function at 0.65 μm is negligible at temperatures below 6000°F. At about 7000°F the error is detectable, and rises rapidly above that temperature.

$$N_{b\lambda} = C_1 \lambda^{-5} e^{-C_2/\lambda T} \qquad (2)$$

CLASSIFICATION

Description

12 Variable Radiance Comparison-Lamp Type (Disappearing Filament Optical Pyromerer) [1,2]*. The essential elements of the instrument are typi-

*Numbers in brackets designate Reference at end of chapter, thus [1].

Copyright ASME International
Provided by IHS under license with ASME
No reproduction or networking permitted without license from IHS
Not for Resale

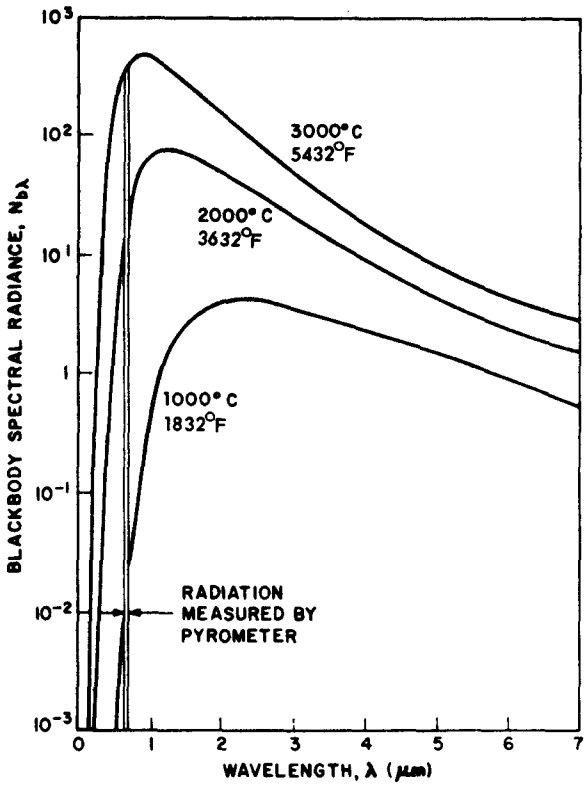

FIG. 7.1 PLANCK'S BLACKBODY RADIATION DISTRIBUTION FUNCTION, SHOWING SPECTRAL BAND UTILIZED BY AN AUTOMATIC OPTICAL PYROMETER AT 0.65 μm.

[The spectral bandwidth for a disappearing filament optical pyrometer at the same wavelength is somewhat greater.]

cally arranged as illustrated in Fig. 7.2. An objective lens focuses a real image of the target in the plane of a standard lamp filament. Both image and filament are magnified for the observer by a microscope lens and an ocular lens. The eyepiece is focused first to provide a sharp image of the standard lamp filament, and then the target image is focused by adjusting the objective lens.

13 The red filter between the eyepiece and lamp serves to produce approximately monochromatic light to the viewer. In making an observation, the current through the lamp filament is adjusted by a rheostat until the image of reference portion of the filament (opposite an index if the filament is straight or at the apex if the filament is U-shaped) is of the same luminance as the image of the target viewed. The outline or detail of the reference section of the filament is indistinguishable from the surrounding field and "disappears" when the current in the lamp is properly adjusted. The value of the current in the lamp may be measured by means of a milliameter, the scale of which is ordinarily graduated in terms of temperature, or, alternatively, a potentiometric measurement of the current may be made; in models employing a built-in potentiometer, the potentiometer scale is graduated in terms of temperature. Standardized absorption glass filters are interposed between the target and the lamp, thus permitting a wide range of temperature to be measured without requiring high filament temperatures. Optical pyrometers of this type are available covering the temperature range 1400 to 18,000°F; however, the majority of applications are below 4500°F, with applications above 7000°F being rare.

14 Constant Radiance Comparison-Lamp Type. The essential elements of the instrument are illustrated in Fig. 7.3. In this type of instrument, the lamp filament operates at a constant radiance ob-

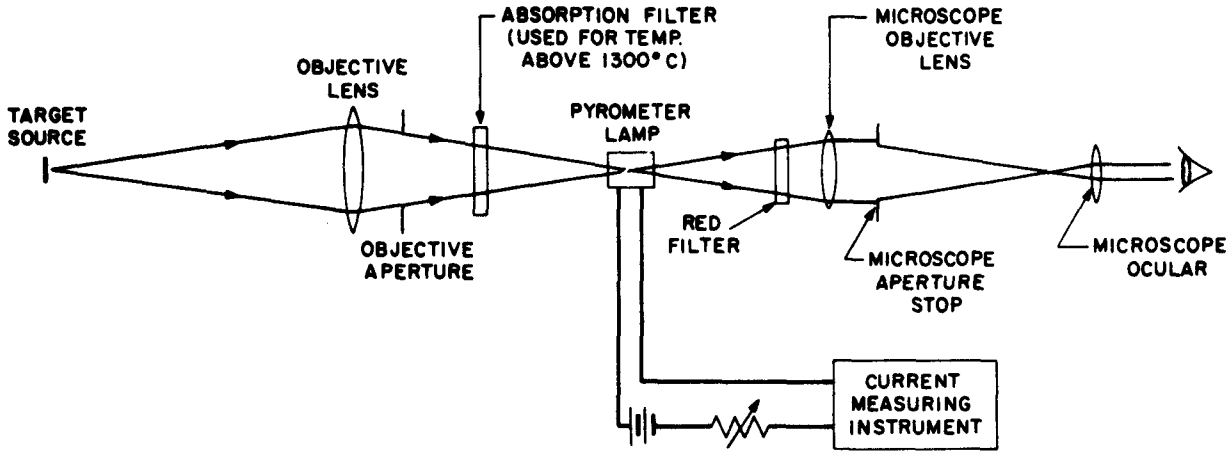

FIG. 7.2 SCHEMATIC DIAGRAM OF AN OPTICAL PYROMETER [1]

Copyright ASME International
Provided by IHS under license with ASME
No reproduction or networking permitted without license from IHS
Not for Resale

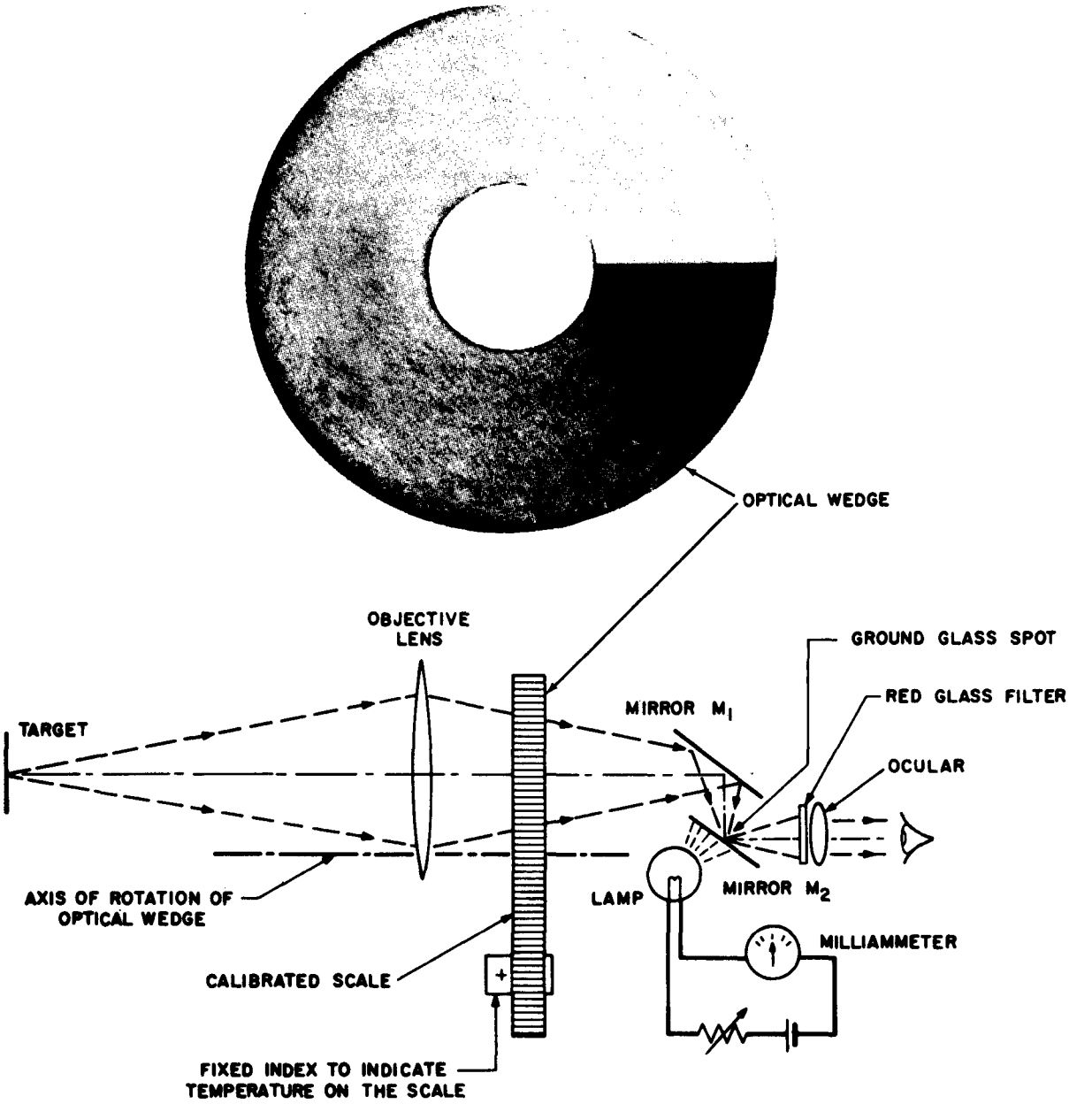

FIG. 7.3 CONSTANT RADIANCE COMPARISON-LAMP OPTICAL PYROMETER.

[The ground glass spot in the mirror M_2 can be illuminated by the pyrometer lamp, with the diffusely transmitted radiation visible to the eye. The target is imaged on the ground glass spot, which appears to the viewer as an illuminated spot in the field of view. The optical wedge is a gray filter whose transmittance varies as a function of angular rotation. The wedge can therefore be rotated to adjust the fraction of radiation transmitted from the target until the target image and ground glass spot image have the same radiance, under which conditions the spot will disappear. The angular position of the wedge may then be taken as a measure of the target radiance temperature, which is indicated directly on a scale attached to the wedge. The lamp is operated at a constant preset radiance which may be adjusted by a rheostat to a preset milliameter indicated current through the lamp filament.]

Copyright ASME International
Provided by IHS under license with ASME
No reproduction or networking permitted without license from IHS
Not for Resale

tained by setting the current through the lamp to a standard value by means of a rheostat and milliammeter. The radiance of the target is matched against that of the lamp filament by means of a polarizing prism, an iris diaphragm, or an absorbing device such as a gray glass circular wedge, interposed between the target and the lamp. A circular glass wedge is used to reduce the luminance of the light emitted from the target to match the luminance of a spot on a ground glass screen (illuminated by the lamp) in the field of view of the eyepiece. The lamp current is adjusted to the fixed value specified for the particular lamp, and the instrument is focused on the target and the wedge is rotated until the image of the spot disappears against the image of the target. The temperature is read directly from a scale attached to the wedge. A red filter in the eyepiece restricts the wavelengths used to a narrow band. Pyrometers of this type are available covering the temperature range from 1400 to 5200°F.

15 Self-Balancing Variable Radiance Comparison-Lamp Type (Automatic Optical Pyrometer). The essential elements of the instrument are illustrated in Fig. 7.4 and Fig. 7.5. Operation of the instrument [3] is similar in principle to that of the disappearing filament optical pyrometer; it differs in that detection of radiation is accomplished with a photodetector (usually a photomultiplier tube) rather than by eye, the lamp current is adjusted by an electron-

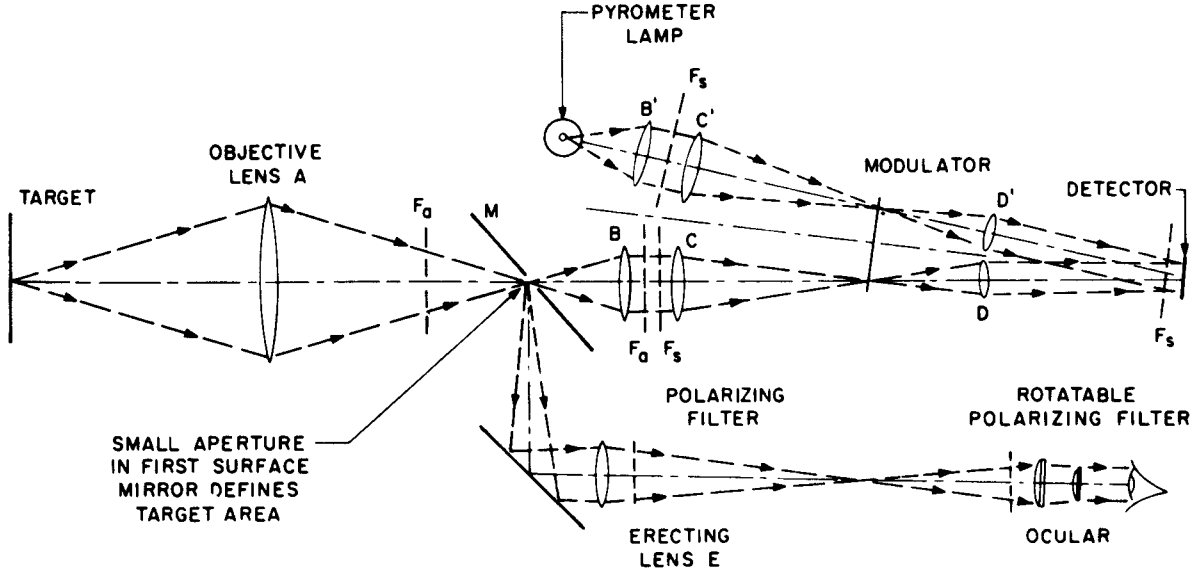

FIG. 7.4 SCHEMATIC OPTICAL SYSTEM OF AUTOMATIC OPTICAL PYROMETERS – VARIABLE RADIANCE COMPARISON-LAMP TYPE.

[Radiation from the target is focused on a small aperture in the mirror M. The portion that does not go through the aperture is reflected into the viewing system. The portion that goes through the aperture is focused by lenses B and C at the plane of the modulator, after which the image of the lens C is focused on the detector. Radiation from the pyrometer lamp filament is treated in the same manner as radiation passing through the mirror aperture. The modulator allows the detector to receive radiation alternately from the pyrometer lamp and from the detector, but not from both at the same time. An interference filter F_s limits the spectral bandwidth and peak wavelength of radiation arriving at the detector: F_s may be located just ahead of the detector, or alternatively, a matched pair of such filters may be located between lenses B and C and between B' and C'. There are also two alternative locations for the absorbing glass (range changing) filters F_a, one between lenses B and C, and the other between the objective lens A and the aperture mirror M. If an absorbing glass filter is not used between lens A and aperture mirror M, a crossed polarizer is located between the lens E and the ocular, to permit variable dimming of the target image.]

Copyright ASME International
Provided by IHS under license with ASME
No reproduction or networking permitted without license from IHS
Not for Resale

ic null-balancing system rather than manually, and the spectral bandwidth employed is usually substantially narrower than in the disappearing filament type. A further difference is that the pyrometer lamp is not mounted in the plane of the target image, resulting in the use of two separate optical trains, one for pyrometer lamp radiation and one for target radiation; the lamp filament is therefore not necessarily at the same radiance as the source, although the radiant flux arriving at the detector through one optical train is equal to that arriving at the detector through the other optical train.

16 In the automatic optical pyrometer, the modulator alternately passes radiation from the target and then from the pyrometer standard lamp at some frequency such as 90 Hz or 400 Hz; if the photomultiplier receives unequal amounts of radiant energy from the two sources, its response is a square wave signal, the phase of which (with respect to the modulator driver) determines whether the lamp current is too high or too low. This signal is synchronously demodulated, then integrated. The integrated signal controls the lamp current, driving it up or down to achieve a zero amplitude square wave from the photomultiplier, at which time the lamp current is said to be in null-balance. The pyrometer has the same range and is calibrated in essentially the same manner as the conventional disappearing filament optical pyrometer, i.e., the pyrometer lamp current is determined as a function of blackbody target temperature.

Because of the null-balance operation of the electronics system, the calibration repeatability is almost totally independent of normal aging effects and other variations in the electronic components, and is determined almost entirely by the stability of the pyrometer lamp calibration.

17 **Other Automatic Pyrometers.** The automatic optical pyrometer permits a large number of possible design variations not available in manually operated optical pyrometers, stemming from the use of photodetectors other than the eye, together with appropriately selected spectral bandpass filters.

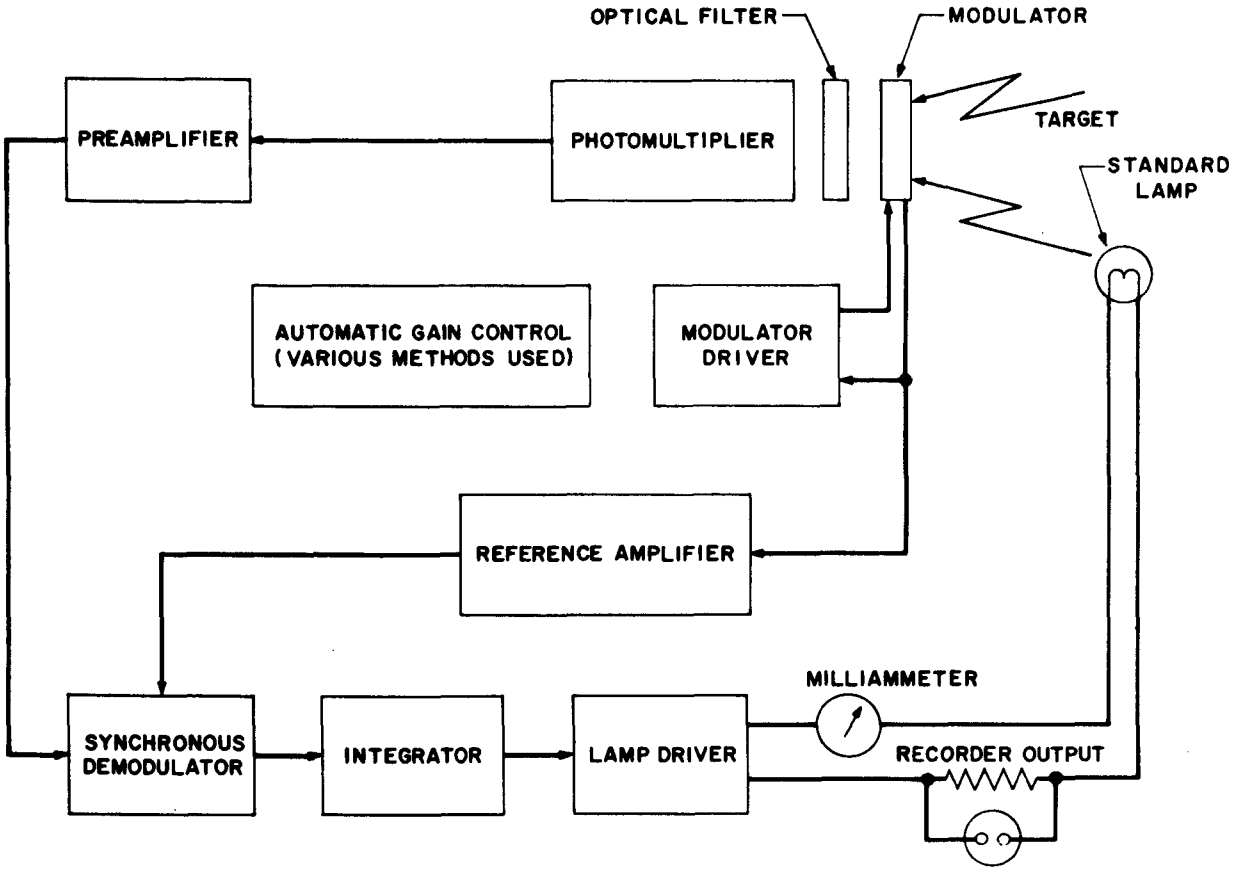

FIG. 7.5 ELECTRONIC SYSTEM BLOCK DIAGRAM FOR AUTOMATIC OPTICAL PYROMETER – VARIABLE RADIANCE COMPARISON-LAMP TYPE.

Copyright ASME International
Provided by IHS under license with ASME
No reproduction or networking permitted without license from IHS
Not for Resale

18 Some of the practical variations, such as the use of a wavelength significantly different from 0.65 μm, may involve the basic instrument design as described above, but require *extensive* consideration of the sources of error discussed following Par. 47, especially of the transmissive properties of the medium between the pyrometer and the target. Water vapor and carbon dioxide absorption in certain spectral regions of the infrared must be taken into account. Spectral bandwidth as well as wavelength then becomes inportant. Special advantage derives from the ability to select a spectral region in which the target emissivity is known to be high, and in being able to make measurements at lower temperatures by operating in the infrared region of the spectrum.

19 Some automatic pyrometers used in the infrared region of the spectrum use a standard source of radiance (such as a lamp or a blackbody operated at a fixed temperature) as a reference, but also depend in part for their accuracy upon the stability of active electronic components. Other automatic pyrometers use no reference standard of radiance, but depend for their accuracy entirely upon the stability of active electronic components, including the photodetector.

20 One design concept, called the two-color ratio pyrometer, or simply the ratio pyrometer, attempts to reduce or eliminate the effect of emissivity and transmission through windows, atmosphere, etc., by measuring the ratio of the target radiance at two wavelengths; if the product of emissivity and transmittance at each of the two wavelengths has nearly the same value, the product cancels out in the ratio measurement and the instrument reads directly in terms of temperature. However, emissivity and transmittance of materials can vary markedly with wavelength; since this can lead to large errors if a correction is not applied, the use of a ratio pyrometer is advisable only when the validity of the emissivity assumption (or a suitable correction factor) has been well established for the particular application. The low sensitivity of ratio pyrometers generally restricts their use to higher temperatures than is the case with "monochromatic" pyrometers.

21. While the state-of-the-art of automatic pyrometry (other than automatic optical pyrometers such as those described in Pars. 15 and 16) is too much in a state of flux to permit or make advisable a comprehensive codification of existing instruments, it is probable that the situation will clarify itself over the next few years. In the interim, some instruments in this category should be considered suitable for ASME Performance Test Code work. Their use in that capacity may yield a significant advantage over either manually operated or automatic optical pyrometers operating at about 0.65 μm, but such use should be undertaken only after *careful* consideration of their suitability to the particular problem at hand; such consideration should be primarily with respect to the measurement accuracy associated with any particular application.

Materials of Construction

22 Since the optical pyrometer is an optical instrument, it is essential that all components be of high quality and properly aligned and assembled. The *lenses* and other *transmitting materials* must be free from imperfections which will cause distortion or scattering of the light rays. Particular attention should be given to the *pyrometer lamp* to insure that the tungsten filament is of uniform luminance over that portion in the field of view that is used as a radiance reference. Solid-state electronic components used in automatic or semiautomatic pyrometers should not be subjected to temperature above approximately 122°F.

CHARACTERISTICS

23 Range. The optical pyrometer has a low temperature limit of approximately 1300°F because of the low radiance of bodies below this temperature. There is basically no upper limit to the temperature that the optical pyrometer is capable of measuring, since one or more absorbing glass filters may be interposed between the target and the lamp filament, so as to reduce the apparent radiance of the target. For some observers using visual optical pyrometers, especially under unfavorable lighting conditions, readings are difficult to obtain below about 1400°F.

24 Some automatic pyrometers operating in the infrared can be utilized effectively down to near room temperature; in these instruments, special care must be exercised (see Pars. 47-61), or large errors may occur.

25 Precision. Where the human eye serves as the detector in the use of an optical pyrometer, the precision of setting (repeatability) depends to a considerable extent on the experience and skill of the observer. The average observer can usually detect a "mismatch" in luminance equivalent to 0.1

Copyright ASME International
Provided by IHS under license with ASME
No reproduction or networking permitted without license from IHS
Not for Resale

or 0.2 percent of the temperature for values of 2000°F and above, depending upon viewing conditions. The precision of photometric matching decreases noticeably and progressively as temperature is reduced below 1600 F, due to decreasing radiance coupled with decreasing visual discrimination of contrast, while the sensitivity decreases due to flattening of the lamp current-versus-temperature curve.

26 In the automatic optical pyrometer, the temperature resolution is generally higher than in the manually operated optical pyrometer by an order of magnitude or more [3, 4], and is a function of several design parameters. The resolution is limited by noise, both in the detection system and ultimately in the randomness of the rate of emission of radiant energy from the target; the noise-equivalent-temperature* is reduced below 1600°F, due to decreasing (typically 0.2 to 0.9 deg F at 1948.0°F) using a 1 sec response time, and varies as a function of target temperature in a way that depends upon the particular circuit design employed. One method of automatic gain control minimizes the noise-equivalent-temperature, causing it to be lower (giving higher resolution) at higher temperatures. An alternative method of automatic gain control maintains the noise-equivalent-temperature at a somewhat higher but more nearly constant value. The noise is reduced by integration in the electric self-balancing system, to an amount that varies with the reciprocal square root of the integrating time. On some pyrometers, the response time is adjustable from about 0.2 sec to several seconds. On others, it is nearly constant, being fixed at approximately 1 sec. In principle, the resolution may be increased indefinitely by increasing the integrating time; in practice, resolution corresponding to integrating times of more than a few seconds is rarely needed and is presently not readily achievable.

27 Accuracy. The accuracies attainable [1, 5] in measuring temperatures with an optical pyrometer depend primarily on the optical system of the instrument (especially the stability of the pyrometer lamp calibration discussed in Par. 29), the conditions under which observations are made, and uncertainty of the emissivity of the target. The indications of a high-grade portable optical pyrometer when used by an experienced observer under favorable conditions may be relied upon to 6 deg F at 2000 deg F and approximately 10 deg F at 3200°F. In industrial measurements, where errors due to fumes, reflected radiation, variations in emissivity, observer fatigue, or other unfavorable working conditions may exist, the tolerance will depend on severity of conditions of measurements.

28 Inaccuracies quoted in manufacturers' specifications (unless specifically stated otherwise) ordinarily apply when the pyrometer is used to determine the temperature of a blackbody. When the temperature of a nonblackbody is being determined a correction should be applied to account for the target emissivity, and allowance must be made for uncertainty in the value of the emissivity (Par. 41) and of the mean-effective-wavelength [1] of the pyrometer (Par. 49). Uncertainty in the value of the emissivity must be determined on a case-by-case basis. Uncertainties in the corrections for emissivity or window transmission loss are usually small or moderately small in magnitude (Tables 7.3, 7.4) and are propbrtional to the mean-effective-wavelength, which must therefore be known to permit numerical computation (Pars. 42, 49).

29 The accuracy of the automatic optical pyrometer may be increased substantially [5] by having it calibrated by the National Bureau of Standards. The mean-effective-wavelength may be determined to within approximately 0.2 mμ; however, the long-term stability of the mean-effective-wavelength in such instruments is not yet known. *The accuracy of the pyrometer usually will be determined by the stability of the pyrometer lamp,* and will therefore vary somewhat from one instrument to another.

30 A good lamp will not change calibration by more than a few tenths of a degree over a period of several hundred hours of use (a poor lamp may change calibration by several degrees in that amount of time). Most lamps drift at a rate of approximately 0.02 deg F per hour at the gold point, but are subject to hysteresis effects of 0.2 to 0.3 deg F when the filament temperature is cycled slowly; they can change by a similar amount when the lamp is turned off for a few days and then turned on again. Accuracies appropriate to the use of any other type of automatic pyrometer must be carefully evaluated in terms of the particular application.

ACCESSORIES

31 Optical pyrometers are generally supplied complete with optical system, lamp current measuring device, and associated electrical or electronics system. A number of special accessories

*Noise-equivalent temperature is the noise-induced fluctuation in the indicated temperature.

Copyright ASME International
Provided by IHS under license with ASME
No reproduction or networking permitted without license from IHS
Not for Resale

are available for certain commercially available units, including: (*a*) *emissivity compensating glass filter* to be used for direct temperature measurement (requiring no emissivity correction) of molten iron or steel or any other material having an emissivity of 0.4; (*b*) special short-focus objective lens for measuring objects of less than 1/32-in. diameter. For some models, temperatures of targets whose diameters are as small as 0.005 in. may be measured. In general, for disappearing filament optical pyrometers, precision suffers when the target width is less than about four times the filament width, as seen through the optical pyrometer [2].

APPLICATION AND INSTALLATION

32 General. Optical pyrometers are ordinarily calibrated to read correctly when sighted on a blackbody and, in general, this is the preferred way in which to use them. When the temperature of a nonblackbody is to be determined, it is often possible to simulate blackbody radiation by creating a cavity in the body, such as by drilling a hole in its surface, and viewing the radiation emerging from the hole. Information regarding design criteria and effectiveness for simulated blackbodies of this type is presented in the following section on "Practical Blackbodies" (Par. 35).

33 Many furnaces approximate blackbody conditions very satisfactorily, although there is no convenient quantitative method for estimating their effective emissivity.* In a perfect blackbody, the details of the inside of the furnace vanish and a piece of steel, for example, that is being heated cannot be distinguished from the background. If the objects in the furnace can be distinguished, but only on close observation, and if much of the detail is lost after they have been in the furnace for some time, it is not likely that the temperature measurement will be seriously in error. If in error at all, the observed temperature will be too high when the furnace walls are of higher radiance than the material being heated and too low when the walls are of a lower radiance. The latter condition is possible if the heat supply is variable or if it is shut off and the furnace allowed to cool.

34 When blackbody conditions cannot be simulated, it is necessary to account for the effect of emissivity. Where it is repeatability rather than actual temperature that is important, such as in some manufacturing processes, it is often adequate to use the radiance temperature without correction. To determine when this can be done it is necessary to have some understanding of the factors that influence emissivity. Similar information is necessary when corrections are to be applied to convert radiance temperature to temperature. This information is presented in the section on "Radiation from the Surface of Real Materials" (Par. 41).

35 Practical Blackbodies. A completely enclosed cavity in any opaque material at a uniform temperature contains blackbody radiation characteristic of the temperature of the cavity walls, but independent of the materials of their construction. A small hole, or aperture, in the enclosure will emit radiation that very closely approximates that of a blackbody at that temperature.

36 When the cavity is at room temperature, the aperture will appear visually to be very black. However, a small fraction of light incident upon the aperture from outside will be reflected back out the aperture after a number of reflections from the cavity walls; since the reflectance of the aperture is slightly greater than zero, its absorptance (and therefore its effective emissivity) must be slightly less than unity (Par. 43).

37 Anything that will reduce the reflectance of the aperture will increase its effective emissivity. This can be done by increasing the number of times an incident ray is reflected by the cavity walls before it emerges from the aperture (usually by making the dimensions of the aperture small compared to those of the cavity), and by constructing the cavity walls of a low reflectance material so that more radiation is absorbed at each reflection.

38 The number of reflections a ray will make before finally finding its way back out through the aperture will depend upon the general shape of the cavity and on the detailed character of the surface roughness of the cavity walls. Reflection from a perfectly smooth surface is described as being specular, while the reflection from a perfectly rough surface is described as being diffuse. Real materials have surfaces that are characterized by a mixture of specular and diffuse components of reflected radiation. Effective emissivities near unity are more easily attainable in cavities with specularly reflecting than with diffusely reflecting wall materials; however, considerable care must be taken when the interior surface of the cavity is

*Since the emissivity of a blackbody is unity by definition, it is a contradiction in terms to speak of a blackbody with emissivity less than unity. The most common solution to this problem, in the case of a simulated blackbody, is to speak of its "effective" emissivity.

Copyright ASME International
Provided by IHS under license with ASME
No reproduction or networking permitted without license from IHS
Not for Resale

specular, because under these conditions the effective emissivity is significantly directional, and seriously large errors may result from viewing the cavity from the wrong direction.

39 While there is as yet no simple formula for accurately expressing the effective emissivity of an aperture in a cavity of arbitrary shape in terms of easily determined parameters, various formulas or graphs have been devised [6–10] that are applicable in most special cases of practical significance. The method of DeVos [6] is generally considered to be valid and of great generality, and is commonly used as a reference against which other formulas are evaluated; however, it is mathematically very cumbersome and is not recommended for routine engineering applications unless high accuracy is mandatory. A review of the subject from the viewpoint of radiation thermometry has recently been made by Bedford [7].

40 Gouffe's Method [8]. Gouffe's method for computation of effective emissivity for cavities of arbitrary shape assumes perfectly diffuse reflection from the cavity walls; it is exact for spherical cavities (with diffusely reflecting walls), but yeilds effective emissivity values that are slightly low for cavities of other shapes. The error tends to increase the further the cavity shape departs from that of a sphere, but is small enough for a wide variety of cavity shapes to justify the use of the method for many common applications. It is presented here for use as a guide in estimating effective emissivity because it is concisely formulated for easy application; more nearly exact values of effective emissivity may be obtained from the references cited above [9, 10] for certain commonly used cavity shapes and for wall materials having both specular and diffuse components of reflectance.

$$\epsilon_0 = \epsilon_0' (1 + k) \qquad (3)$$

where $\epsilon_0' = \dfrac{\epsilon}{\epsilon\,[1 - (s/S)] + (s/S)}$

and $k = (1 - \epsilon)\ [(s/S) - (\dfrac{\Omega}{\Pi})]$, a small negative number, tending to zero as the cavity shape approaches that of a sphere.

ϵ_0 = effective emissivity of blackbody aperture

ϵ = emissivity of materials forming the blackbody interior surface

s = area of aperture

S = area of interior surface of blackbody cavity, including the aperture

Ω = the solid angle of radiation emerging from the cavity aperture, having its apex at the intersection of the viewing axis with the back wall of the cavity.

41 Radiation from the Surface of Real Materials. A body made of an actual material may be designated as a real body, to distinguish it from a blackbody. The interior of an opaque real body is totally absorbing, and when at a uniform temperature must therefore radiate as a blackbody. When blackbody radiation from the interior approaches the surface, part of it is reflected back into the interior; the remainder passes through the surface and is emitted. The fraction that is emitted is defined to be the emissivity of the surface. The fraction that is reflected is defined to be the reflectance, which has the same value for radiation approaching the surface from either side.

42 The spectral emissivity ϵ_λ is the fraction by which blackbody radiation is reduced in the process of being emitted from the surface. A surface at absolute temperature T_0 and having an emissivity ϵ_λ will appear to the pyrometer (having a narrow spectral bandwidth) to be a blackbody at a lower temperature T_r; the relationship between T_r and T_0 is as follows [1]:

$$1/T_0 - 1/T_r = \lambda_e/c_2 \ \log_e \epsilon_\lambda \ , \ T_0 > T_r \qquad (4)$$

where

T_0 = absolute temperature of the target in kelvins

T_r = absolute temperature of the target as indicated by the pyrometer, called the spectral radiance (luminance) temperature, in kelvins

λ_e = mean-effective-wavelength, in meters

c_2 = 0.014388 mK

ϵ_λ = spectral emissivity of the target surface

43 The blackbody radiation incident upon the surface from the interior must either be emitted or

Copyright ASME International
Provided by IHS under license with ASME
No reproduction or networking permitted without license from IHS
Not for Resale

internally reflected, for every wavelength; this may be expressed as follows:

$$\epsilon_\lambda + R_\lambda = 1 \qquad (5)$$

where ϵ_λ = spectral emissivity of the surface

R_λ = spectral reflectance of the surface

44 From the above expression it can be seen that a good emitter is a poor reflector, and vice versa. Thus, carbon has a high emissivity and a low reflectance, while platinum has a low emissivity and a high reflectance. Anything that affects reflectance must have a corresponding effect on emissivity. Since reflectance is wavelength dependent and slightly direction and temperature dependent, so is the emissivity. A material that reflects and emits a constant fraction at all wavelengths is said to be a "graybody"; like a blackbody, a perfect graybody is an idealization that can be experimentally realized only as an approximation. Actual materials may be considered to be gray only in restricted spectral regions.

45 If the surface of a particular material is perfectly smooth, it will have its highest possible reflectance, and will therefore have its lowest possible emissivity. If the surface is roughened, its reflectance will be reduced because of increased absorption due to multiple reflections (within the small cavities constituting the surface roughness), but its emissivity will be increased by a like amount. Emissivity is thus seen to be dependent upon the state of surface roughness of the radiating body. Tables 7.1 and 7.2 list the spectral emissivities of the more common engineering materials (Refs. 11–14 contain an exhaustive compilation and evaluation of emissivity data on a large number of materials), and Table 7.3 presents corrections that must be added to indicated temperatures to correct for the effect of emissivity for pyrometers operating at 0.65 μm. A more complete tabulation of corrections may be found in NBS Monograph 30 [15]. In using Tables 7.1 and 7.2 it is necessary to take into account the state of surface roughness, which will tend to increase the emissivity over the values listed in the table. The extent of oxidation will also influence the emissivity, an effect that often causes difficulty in practice, where heated materials exhibit surface oxidation changing with time.

46 When possible, a measured value of the spectral emissivity of the particular piece of material under consideration should be used, rather than published values such as those in Tables 7.1 and 7.2; an often used method is to drill a small hole in the surface of the material in question to provide a blackbody cavity. From an optical pyrometer determination of the radiance temperature of both the blackbody cavity and the surface of the material adjacent to it in the temperature range of interest, the spectral emissivity may be calculated, using Eq. (4), or the A-value may be calculated, using Eq. (6), (Par. 55).

47 Sources of Error. The sources of error in optical pyrometry may be broadly grouped into three categories: (*a*) those associated with the pyrom-

TABLE 7.1 SPECTRAL EMISSIVITY OF MATERIALS, SMOOTH SURFACE, UNOXIDIZED

Wavelength = 0.65 μm (red light)

(Roeser and Wensel, National Bureau of Standards)*

Material	Solid	Liquid
Beryllium	0.61	0.61
Carbon	0.80-0.93	....
Chromium	0.34	0.39
Cobalt	0.36	0.37
Columbium	0.37	0.40
Copper	0.10	0.15
Erbium	0.55	0.38
Gold	0.14	0.22
Iridium	0.30	...
Iron	0.35	0.37
Manganese	0.59	0.59
Molybdenum	0.37	0.40
Nickel	0.36	0.37
Palladium	0.33	0.37
Platinum	0.30	0.38
Rhodium	0.24	0.30
Silver	0.07	0.07
Tantalum	0.49	...
Thorium	0.36	0.40
Titanium	0.63	0.65
Tungsten	0.43	...
Uranium	0.54	0.34
Vanadium	0.35	0.32
Yttrium	0.35	0.35
Zirconium	0.32	0.30
Steel	0.35	0.37
Cast Iron	0.37	0.40
Constantan	0.35	...
Monel	0.37	...
Chromel P (90 Ni-10 Cr)	0.35	...
80 Ni-20 Cr	0.35	...
60 Ni-24 Fe-16 Cr	0.36	...
Alumel (95 Ni;Bal. Al, Mn, Si)	0.37	...
90 Pt-10 Rh	0.27	...

*From the "Handbook of Chemistry and Physics," Chemical Rubber Publishing Company.

Copyright ASME International
Provided by IHS under license with ASME
No reproduction or networking permitted without license from IHS
Not for Resale

eter, (*b*) those associated with the media between the pyrometer and the source, and (*c*) those associated with the source.

TABLE 7.2 SPECTRAL EMISSIVITY OF OXIDES WITH SMOOTH SURFACES

Wavelength = 0.65 μm (red light)

(Roeser and Wensel, National Bureau of Standards)*

Material	Range of Observed Values	Probable Value for the Oxide Formed on Smooth Metal
Aluminum oxide	0.22 to 0.40	0.30
Beryllium oxide	0.07 to 0.37	0.35
Cerium oxide	0.58 to 0.80	...
Chromium oxide	0.60 to 0.80	0.70
Cobalt oxide	.....	0.75
Columbium oxide	0.55 to 0.71	0.70
Copper oxide	0.60 to 0.80	0.70
Iron oxide	0.63 to 0.98	0.70
Magnesium oxide	0.10 to 0.43	0.20
Nickel oxide	0.85 to 0.96	0.90
Thorium oxide	0.20 to 0.57	0.50
Tin oxide	0.32 to 0.60	...
Titanium oxide	.....	0.50
Uranium oxide	.....	0.30
Vanadium oxide	.....	0.70
Yttrium oxide	.....	0.60
Zirconium oxide	0.18 to 0.43	0.40
Alumel (oxidized)	.....	0.87
Cast Iron (oxidized)	.....	0.70
Chromel P (90 Ni-10 Cr) (oxidized)	.....	0.87
80 Ni-20 Cr (oxidized)	.....	0.90
60 Ni-24 Fe-16 Cr (oxidized)	.....	0.83
55 Fe-37.5 Cr-7.5 Al (oxidized)	.....	0.78
70 Fe-23 Cr-5 Al-2 Co (oxidized)	.....	0.75
Constantan (55 Cu-45 Ni) (oxidized)	.....	0.84
Carbon Steel (oxidized)	.....	0.80
Stainless Steel (18-8) (oxidized)	.....	0.85
Porcelain	0.25 to 0.50	...

*From the "Handbook of Chemistry and Physics," Chemical Rubber Publishing Company.

48 Sources of error associated with the pyrometer have to do primarily with the stability of calibration of the reference lamp, the determination of the mean-effective-wavelength, the spectral transmittance characteristics of the absorption glass filter, and the accuracy of calibration; except for the mean effective wavelength, discussed below, these were discussed in the section on "accuracy." Most of the other errors can be treated in terms of the extent to which they reduce (or increase) the radiance measured by the pyrometer, and are usually correctable.

49 The *mean-effective-wavelength* varies somewhat from one model to another, but for optical pyrometers it is usually between 0.636 μm and 0.662 μm. For the type shown in Fig. 7.2, it is typically assumed to be about 0.65 μm. A curve of the mean-effective-wavelength as a function of the target temperature is ordinarily available from the manufacturer. Variations among filters in disappearing filament optical pyrometers cause variations of as much as ± 1 percent in the mean-effective wavelength [16], relative to values supplied by the manufacturer, giving rise to corresponding uncertainties in computed emissivity and window transmission corrections; this will usually be the dominant uncertainty in the value of the mean-effective-wavelength, since the uncertainty due to differing visual responses among observers will rarely exceed 0.2 percent.

50 Size-of-Source Effect. Radiation from outside of the target area but from the immediate neighborhood of the target is found to influence the pyrometer indication at least to a small extent; this is called the size-of-source effect. For visual and automatic optical pyrometers, the effect is most noticeable for small targets. It is caused primarily by the scattering of radiation within the pyrometer optical system, and (in visual optical pyrometers) by heating of the pyrometer lamp filament by the incident radiation; on the upper temperature ranges of visual optical pyrometers and some models of automatic optical pyrometers; small transmission changes in the range filters can occur if the filters are heated somewhat by absorbed radiation.

51 In the automatic optical pyrometer, location of the range filters behind the mirror aperture (one of the two possible locations of F_a in Fig. 7.4) reduces the filter heating effect to a negligible level [3]; in this configuration, an automatic optical pyrometer with clean optical surfaces has a size-of-source effect usually not greater than 0.6 deg F at the gold point (1948.0°F), tending to indicate a higher temperature as the source area is increased. If the extraneous source area is at nominally the same temperature as the target, the magnitude of the effect is proportional to the square of the absolute (target) temperature and to the mean-effective- wavelength; the effect is therefore inherently larger in infrared sensing pyrometers.

Copyright ASME International
Provided by IHS under license with ASME
No reproduction or networking permitted without license from IHS
Not for Resale

52 Very few data are available on the magnitude of this error in disappearing filament optical pyrometers; the pyrometer lamp filament is heated slightly by the radiation of the target image, and no special precautions have been taken to minimize the effect of scattered radiation. The small amount of available data [4] suggests that the effect in a disappearing filament pyrometer is of the order of 2 to 4 deg F (at the gold point) difference between viewing very small and very large targets.

53 The size-of-source effect can cause a very large error, especially in pyrometers operating in the infrared, if the area adjacent to the target is at a much higher radiance temperature than the target, or if a much higher temperature source in the background (behind the target) lies near the line of sight.

54 The effect can be almost entirely eliminated for a particular application by calibrating the pyrometer against a target of the same size and shape, and at the same distance as is to be used in the intended application.

55 Windows and Atmospheric Absorption. Suppose a pyrometer sighted on a blackbody indicates a temperature T_0 (expressed on the Kelvin scale), but indicates a lower temperature T when viewing the same blackbody through a window having a transmittance τ_λ. The relationship between the temperatures indicated with and without the window in place is given [1] to a close approximation by

$$1/T_0 - 1/T = \lambda_e/c_2 \quad \log_e \tau_\lambda = -A, \quad T_0 > T \qquad (6)$$

Note the similarity between Eqs. (4) and (6); the role of the spectral emissivity ϵ_λ is exactly the same as that of a window of spectral transmittance τ_λ. For any measured value of T, the value of T_0 may be obtained if the mean-effective-wavelength λ_e, the spectral transmittance τ_λ, and the second radiation constant c_2 are known. It is usually more practical to experimentally determine the value of A by direct measurement of T and T_0; A is very nearly constant (it varies slightly because the mean-effective-wavelength varies slightly with temperature), and may thus be used to relate other values of T and T_0. The window transmittance, and thus the A-value, are dependent upon the direction of the transmitted radiation. The transmittance is highest in the direction normal to the surface.

56 A tabulation of the difference between T and T_0 appears in Table 7.4 [15] for the case of a thin piece of clear window glass. Although surface reflectance accounts for almost all of the reduction in transmittance for very thin windows, the transmittance of a window tends to decrease with increasing thickness due to absorption; it is usually advisable to determine the A-value experimentally, especially for windows that are thick or if reduced transmittance is visually detectable.

57 The effect of atmospheric transmission is analogous to that of window transmission. However, if atmospheric attentuation is not visually apparent, the atmosphere is sufficiently transparent that the correction is negligible for any pyrometer using only visible red wavelength radiation. Where it is not negligible, atmospheric transmission is likely to be so variable as a function of time as to render computed corrections impractical. The most common practice in such cases is to sight the pyrom-

TABLE 7.3 EMISSIVITY AND TRANSMITTANCE CORRECTIONS
For Addition To Observed Temperatures for Optical Pyrometer Using Red Light at Wavelength = 0.650 μm

Indicated Temperature	Spectral Emissivity or Transmittance									
	0.1	0.2	0.3	0.4	0.5	0.6	0.7	0.8	0.9	1.0
700°C	110°C	74°C	54°C	41°C	31°C	22°C	16°C	10°C	5°C	0
800	135	91	66	50	37	27	19	12	6	0
900	163	109	80	60	45	33	23	14	7	0
1000	194	130	95	71	53	39	27	17	8	0
1100	229	152	111	83	62	45	31	19	9	0
1200	266	177	128	96	71	52	36	22	10	0
1300	308	203	147	110	81	59	41	25	12	0
1400	352	232	168	124	92	67	46	29	13	0
1500	401	262	189	140	104	76	52	32	15	0
1600	453	295	212	157	117	85	58	36	17	0
1700	510	330	237	176	130	94	65	40	19	0
1800	570	368	263	195	144	104	72	44	21	0
1900	634	408	291	215	159	115	79	49	23	0
2000	704	450	321	236	174	126	86	53	25	0

Copyright ASME International
Provided by IHS under license with ASME
No reproduction or networking permitted without license from IHS
Not for Resale

TABLE 7.4 WINDOW CORRECTIONS

Corrections to be added to observed temperatures to correct for (reflectance corresponding to a refractive index of 1.57) loss of light transmitted through a single thin window of uncoated nonabsorbing glass. Absorption losses, dependent on the character and thickness of the glass, are likely to increase the corrections for thickness greater than about 1 mm.

Wavelength = 0.650 μm

Observed Temperature °C	Correction to be Added °C
800	6
1000	8
1200	10
1400	13
1600	17
1800	21
2000	25
2200	29
2400	34
2600	40
2800	46
3000	52

eter through a tube through the offending region through which a clean transparent gas is slowly purged, creating in effect a transparent window. When a sight tube is used, precautions must be observed so as not to restrict the entrance aperture of the pyrometer, as discussed in the next paragraph. For automatic pyrometers operating in the infrared, the errors caused by atmospheric absorption may be severe at certain wavelengths, and are a function of absolute humidity and of the distance between the pyrometer and the target.

58 Peepholes and Sight Tubes. When a pyrometer is used to view through a peephole, sight tube, or any other small diameter opening, *care must be taken to assure that the entrance aperture of the pyrometer is not obstructed.* The entrance aperture of the pyrometer may be thought of as that portion of the objective lens through which radiation must pass to be measured; it is ordinarily a circular area slightly smaller in diameter than the objective lens. The cone of radiation having the entrances aperture as a base and a point on the target (at which the measurement is made) as the apex, which may be called the entrance cone, must be free from obstructions to assure that the entrance aperture is unobstructed. If an obstruction occurs, such as by the edge of a misaligned window or sight tube, the pyrometer will read low. In the disappearing filament pyrometers, a partially obstructed entrance aperture will make it impossible to obtain good disappearance of the filament; complete filament disappearance is a good indication that such obstruction does not exist.

59 Emissivity. When an optical pyrometer is sighted on the surface of a material in the open (unexposed to significant amounts of extraneous radiation), its temperature indication will be low due to the effect of spectral emissivity. Failure to apply a correction for the effect of the emissivity of a nonblackbody, or a large uncertainty in the emissivity value used, will lead to a significantly large error or uncertainly in the measured temperature; this is usually the largest potential source of error associated with optical pyrometry. The error, or a correction for it, may be computed from Eq. (4) or an estimate [11–14] of it may be obtained from Tables 7.1, 7.2, and 7.3.

60 Reflected Radiation. A radiating target also reflects radiation from its surroundings. The error caused by such reflection [5] depends especially strongly on the specular component of reflectance, i.e., the tendency of the target to form an image of another radiating body, as seen by the pyrometer. If the specular component of reflectance is significant and especially if the radiance temperature of the other radiating body (such as an incandescent lamp) is high compared to that of the target being sighted on by the pyrometer, large errors may result; even if the target is diffuse, the resulting error may be significant. This effect is most pronounced when the target temperature is low. Screening the radiation from the offending source or viewing the target from a direction where the reflected component is not likely to be seen is recommended. The magnitude of the error is larger in infrared sensing pyrometers.

61 Nonuniformity of Cavity Wall Temperature. The methods of determining effective emissivity of practical blackbodies by computation only of the reflectance contain the assumption that the cavity walls are at a uniform temperature, a condition often not very well met in practice. The radiation distribution from an aperture in a cavity in which the walls are not at a uniform temperature cannot be characterized by a single temperature, and the effective emissivity has been calculated for only a few special cases [10]. In the determination of ra-

Copyright ASME International
Provided by IHS under license with ASME
No reproduction or networking permitted without license from IHS
Not for Resale

diance temperature using monochromatic optical pyrometers, this condition will lead to errors that are less than the maximum wall-temperature difference. Temperature uniformity of the cavity is dependent, in part, on the thermal diffusivity of the cavity walls, and the heat transfer geometry. The use of highly conducting materials (where possible), small cavity dimensions, and thick cavity walls all tend to promote temperature uniformity. The dimension, however, is necessarily compromised by the minimum acceptable aperture diameter.

62 Polarized Radiation. Radiation emitted from a nonblackbody surface is slightly polarized, usually being negligibly polarized in a direction normal to the surface and somewhat strongly polarized at angles approaching the tangent. In a pyrometer using reflection optics, some polarization of the reflected radiation will occur which, if uncompensated within the pyrometer, may cause an error when viewing polarized radiation. This error can ordinarily be made negligible by viewing the target in a direction within 15° to the normal of its surface.

63 Essential Considerations. Since the optical pyrometer is basically an optical instrument, all precautions related to handling of the pyrometer and to cleanliness of the surfaces of transmitting and reflecting components, proper alignment and focusing should be exercised. Regular cleaning of the objective lens prior to use of the pyrometer is especially important; lens tissue is recommended for this purpose. A thin film of foreign material on the objective lens is often more detrimental to accuracy than several small opaque specks on the lens surface, such as fine droplets of splattered metal. If the accumulation of such droplets occupies as much as 0.5 percent of the lens area (corresponding to about 1 deg F error at a target temperature of 2000°F), however, the lens should be replaced. Care should also be exercised so as not to operate the pyrometer lamp at temperatures higher than that corresponding to the maximum of the low range scale calibration. If higher lamp temperatures are required to match the source, the next higher range should be employed. Care should be taken to avoid visually detectable vibration of the lamp filament at its natural frequency, which may eventually cause the filament to break. Maintenance should be performed in accordance with manufacturer's recommendations.

64 Optical pyrometers are usually supplied with an eyeshield so as to screen the observer's eye from extraneous light during an observation. It may be advantageous to make use of additional screening, such as a photographer's black cloth, when making pyrometer readings in a brilliantly lighted area.

65 Treatment of Data. Table 7.3 shows the corrections that must be added to the readings obtained with an optical pyrometer for various emissivities or window transmittances to obtain the true temperatures [15] , or the appropriate corrections may be calculated directly from Eqs. (4) or (6). Corrections for reflected light from extraneous sources can sometimes be made; the experimental and analytical techniques required, however, are outside of the scope of this discussion.

ADVANTAGES AND DISADVANTAGES

66 Advantages

(*a*) The instrument has a long life expectancy, since no part of it is exposed to destructive high temperature effects.

(*b*) The indicated temperature is that of the body under test and not that of some adjacent body (for example, a thermocouple) that is assumed to be at the same temperature as the body under test; the temperature of the body under test is not disturbed by the pyrometer.

(*c*) The high rate of change of spectral radiance with temperature permits accurate temperature readings with moderate accuracy in photometric match.

(*d*) The method is rapid under most circumstances.

(*e*) Temperatures of small bodies, such as thin wires, can be measured without influencing the temperature of the body.

(*f*) When used under suitable conditions, optical pyrometry is the most accurate method for determining high temperatures.

(*g*) The automatic optical pyrometer is suitable for recording and controlling temperature.

(*h*) The temperature of moving objects can be measured, since direct contact is not required.

Copyright ASME International
Provided by IHS under license with ASME
No reproduction or networking permitted without license from IHS
Not for Resale

67 Disadvantages

(*a*) Errors may be caused by the presence of windows, smoke, incandescent gases between the observer and the object under test, or by radiation from the target reflected from other sources of radiation (especially if the extraneous source is at a higher temperature than the target). Such errors may be difficult to prevent or to otherwise correct.

(*b*) It is necessary to simulate blackbody conditions or to have a knowledge of the spectral emissivity of the material sighted upon in order to obtain its temperature accurately.

(*c*) The human element enters as an important source of error with the visual optical pyrometer.

(*d*) The visual optical pyrometer does not lend itself readily to automatic operation.

(*e*) Line-of-sight viewing is usually required.

(*f*) Initial capital investment may be relatively high, depending upon the circumstances.

REFERENCES

68 Throughout the text Reference numbers are enclosed in brackets, thus [1].

[1] "Theory and Methods of Optical Pyrometry," H. J. Kostkowski and R. D. Lee, "Temperature, Its Measurement and Control in Science and Industry," vol. 3, part 1, p. 449, Reinhold, New York, 1962.

[2] "Optical Pyrometry," P. H. Dike, W. T. Gray and F. K. Schroyer, Leeds and Northrup Company, 1966.

[3] "A High Precision Automatic Optical Pyrometer," G. D. Nutter, "Temperature, Its Measurement and Control in Science and Industry," vol. 4, ISA Pittsburgh.

[4] "The NBS Photoelectric Pyrometer of 1961," R. D. Lee, "Temperature, Its Measurement and Control in Science and Industry," vol. 3, part 1, 511, Reinhold, New York, 1962.

[5] "The NBS Photoelectric Pyrometer and Its Use in Realizing the International Practical Temperature Scale above 1063°C," R. D. Lee, Metrologia, vol. 2, no. 4, 150, Oct. 1966.

[6] "Evaluation of the Quality of a Blackbody," J. C. De Vos, *Physica*, **20**, 669, 1954.

[7] "Effective Emissivities of Blackbody Cavities – A review with Applications to Pyrometry," R. E. Bedford, "Temperature, Its Measurement and Control in Science and Industry," vol. 4, ISA Pittsburgh.

[8] "Corrections de'ouverture des corps-noirs artificiels compte tenu des diffusions multiples internes," A. Gouffé, *Revue d'Optique*, **24**, 1, 1945.

[9] "Radiation Heat Transfer," E. M. Sparrow and R. D. Cess, ch. 3 and 6, Brooks-Cole Publishing Company, Belmont, Calif., 1966.

[10] "A Note on the Numerical Evaluation of Thermal Radiation Characteristics of Diffuse Cylindrical and Conical Cavities," B. A. Peavy, *Journal of Research of the National Bureau of Standards*, **70 C**, 139, 1966.

[11] "Theory and Measurement of Emittance Properties for Radiation Thermometry Applications," D. P. DeWitt and R. S. Hernicz, "Temperature, Its Measurement and Control in Science and Industry," vol. 4, ISA Pittsburgh.

[12] "Thermal Radiative Properties of Metallic Elements and Alloys," vol. 7, TPRC Series on the Thermophysical Properties of Matter, IFI/Plenum Data Corp.

[13] "Thermal Radiative Properties of Non-Metallic Solids," TPRC Series on the Thermophysical Properties of Matter, IFI/Plenum Data Corp., (in press).

[14] "Thermal Radiative Properties of Coatings," TPRC Series on the Thermophysical Properties of Matter, IFI/Plenum Data Corp., (in preparation).

[15] "Corrected Optical Pyrometer Readings," National Bureau of Standards Monograph 30, U.S. Government Printing Office, Washington, D.C.

[16] "Recent Advances in Optical Pyrometry," D. R. Lovejoy, "Temperature, Its Measurement and Control in Science and Industry," vol. 3, part I, 487-506, ISA Pittsburgh.

Additional Reference: "Radiation Thermometry, Part 1 and 2," G. D. Nutter, *Mechanical Engineering*, June and July, 1972.

Copyright ASME International
Provided by IHS under license with ASME
No reproduction or networking permitted without license from IHS
Not for Resale

CHAPTER 8, BIMETALLIC THERMOMETERS

CONTENTS

	Par.
GENERAL:	
Scope	1
Definitions	2
PRINCIPLES OF OPERATION	4
CLASSIFICATION:	
Description	5
Materials of Construction	10
CHARACTERISTICS:	
Range	11
Sensitivity	12
Accuracy	13
Response	14
Mechanical Stability	15
Thermal Stability	16
ACCESSORIES	17
APPLICATION AND INSTALLATION	18
Other Considerations	19
Treatment of Data	20
ADVANTAGES AND DISADVANTAGES:	
Advantages	21
Disadvantages	22
REFERENCES	23

GENERAL

Scope

1 The purpose of this chapter is to present information which will guide the user in the selection, installation and use of bimetallic thermometers.

Definitions

2 **A Bimetallic Thermometer** is one consisting of an indicating or recording device, a sensing element called a bimetallic thermometer bulb and a means for operatively connecting the two (Fig. 8.1). A bimetallic thermometer bulb is comprised of a bimetal element and its protective sheath (Fig. 8.2). The bimetal coil rotation, which is caused by the differential thermal expansion of the metals, rotates a shaft and attached pointer. A scale graduated in temperature units is used to relate pointer motion to temperature. Since bimetal element rotation is essentially linearly related to ΔT, the scale is graduated linearly. A calibration must be performed over the entire range span, however, because the actual pointer motion may not be linear. Mechanical friction and geometrical alignment can affect linearity.

3 **The Immersion Length** is the length of the bulb immersed in the flowing fluid. It is also the length immersed in a stagnant fluid. **Insertion Length** is the distance from the thermometer bulb tip to the highest possible point of fluid immersion. This distance is from the bulb tip to the base of the threads in Fig. 8.3. If the thermometer bulb was inserted in a properly fitted well, Insertion length would be from the well tip to the base of the well

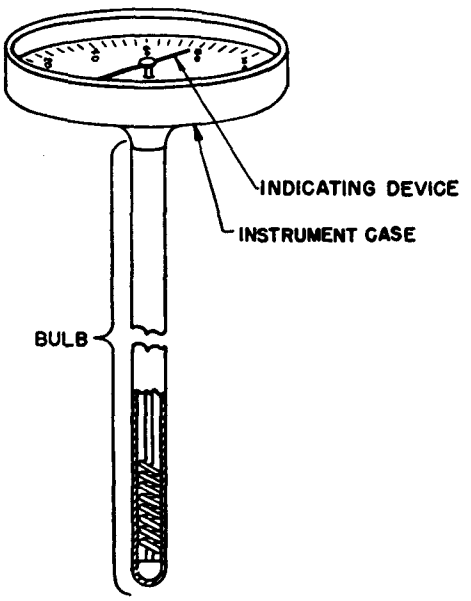

FIG. 8.1 BIMETALLIC THERMOMETER
(Courtesy of Scientific Apparatus Makers Association)

Copyright ASME International
Provided by IHS under license with ASME
No reproduction or networking permitted without license from IHS
Not for Resale

threads. Insertion length can be distinguished from immersion length with the following example. In a fully filled pipe flow application, immersion length is the portion of the thermometer bulb exposed to the flowing fluid. However, a relatively stagnant fluid column surrounds the remainder of the thermometer bulb between the inner pipe surface and the base of the threads. The **Sensitive Portion Length** is the distance from the thermometer bulb tip to the upper end of the bimetallic element. See Fig. 8.3.

PRINCIPLES OF OPERATION

4 The operation of a bimetallic thermometer depends upon the difference in thermal expansion of two metals. The most common type of bimetallic thermometer used in industrial applications is one in which a strip of composite material is wound in the form of a helix or helices. The composite material consists of dissimilar metals which have been fused together to form a laminate. The difference in thermal expansion of the two metals produces a change in curvature of the strip with changes in temperature. The helical construction is used to translate this change of curvature to rotary motion of a shaft.

CLASSIFICATION

Description

5 Industrial Type Thermometer. These thermometers are generally supplied with 1/2 or 3/4 in. external standard pipe thread connections. The bulb diameter varies from approximately 1/8 to 3/8 in. depending on the model, bulb length, and manufacturer. Bulb lengths from approximately 2-1/2 in. to 5 ft are available.

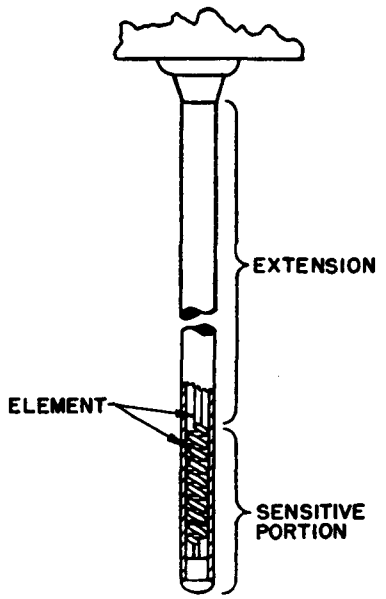

FIG. 8.2 BIMETALLIC THERMOMETER BULB
(Courtesy of Scientific Apparatus Makers Association)

6 Laboratory or Test Type Thermometer. These thermometers are characterized by higher accuracies than the industrial type and the absence of threaded connections. Bulb diameters and lengths are available in the sizes given for Industrial thermometers.

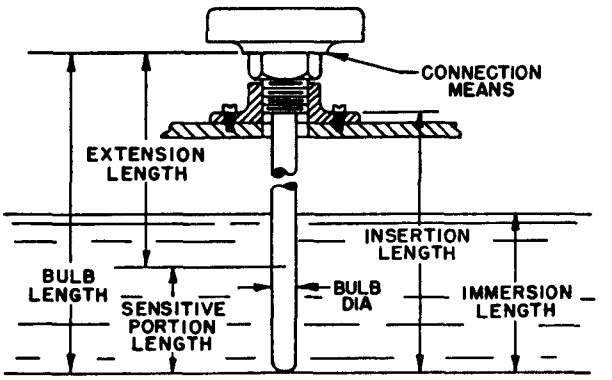

FIG. 8.3 NOMENCLATURE
(Courtesy of Scientific Apparatus Makers Association)

One method of increasing accuracy is to increase the number of coils in the bimetal element thus increasing the angular motion for a given temperature change.

7 Straight and angle forms of bimetallic thermometers are available. In the straight form, a helical spring is generally employed to transmit the rotary motion of the shaft through an angle to the pointer. See Fig. 8.4. In the angle form, the pointer is attached to the shaft. See Fig. 8.5.

8 Case diameters range from 1 to 6 in. with effective scale lengths from 2 to 12 in. Graduations usually cover 270 to 300 angular degrees.

9 Thermometers are also available with friction-restrained extra pointers that indicate maximum or minimum temperatures. Some manufacturers offer thermometers with fume-proof casings. Thermometers are also manufactured which have silicone oil damping in the stem for protection against shock and vibration.

Copyright ASME International
Provided by IHS under license with ASME
No reproduction or networking permitted without license from IHS
Not for Resale

Silicone oil damping cannot be used above approximately 500°F. Damping is also accomplished by placing a high viscosity oil in the clearance of the upper shaft bearing. Thus, damping can be accomplished on high range thermometers.

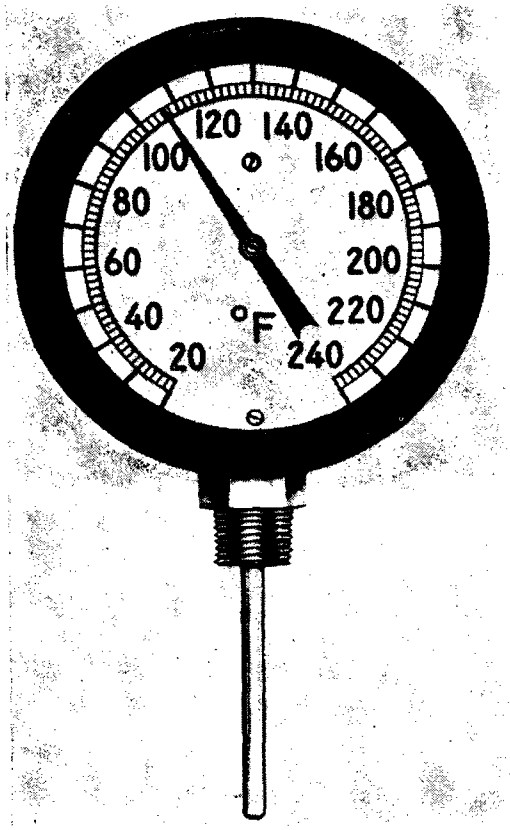

FIG. 8.4 STRAIGHT FORM INDUSTRIAL BIMETALLIC THERMOMETER
(Courtesy of Weston Instruments–Division of Daystrom, Inc.)

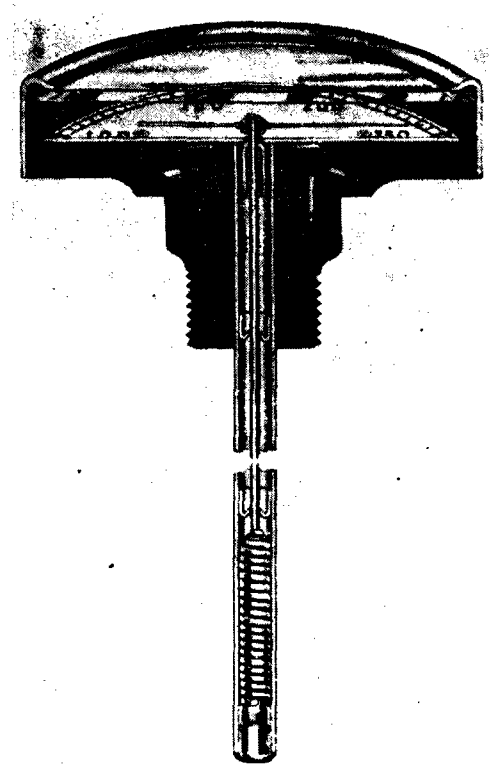

FIG. 8.5 SECTIONAL VIEW OF ANGLE FORM INDUSTRIAL BIMETALLIC THERMOMETER
(Courtesy of Weston Instruments–Division of Daystrom, Inc.)

Materials of Construction

10 Bimetallic thermometers are available with 18-8 type stainless protective shells which are corrosion resistant and will withstand pressures up to 2000 psi. Where pressure or corrosive conditions indicate the need for greater protection, wells of corrosion resistant materials are available. Suitable plastic or lead coatings may be applied directly to the protective shell to overcome some corrosive conditions.

Case windows are available in plain glass, plastic, or safety glass.

The safety glass employed is either laminated glass or tempered glass. The bond between layers of the laminated glass can soften at high ambient temperatures (150°F or more). Therefore, tempered glass may be a better choice for high range shock resistant thermometer applications where the case temperatures will be at or above 150°F. Manufacturers' literature should be consulted before selection as the above statement may not apply in every case. Plastic windows are adequate for shock resistance but also soften at ambient temperatures above 150°F. On hermetically sealed thermometers, the internal air pressure increases as temperature increases and can cause a softened plastic window to blow out.

CHARACTERISTICS

11 Range. Bimetallic thermometers are available in temperature ranges from −200 to 1000°F; however, they are not recommended for continuous operation above 800°F. Range changes are made by use of different materials or by changing the bimetal element length (number of coils). Length is shortened as span is increased.

Copyright ASME International
Provided by IHS under license with ASME
No reproduction or networking permitted without license from IHS
Not for Resale

12 Sensitivity (Bimetal element angular motion for a given temperature change) is determined by the physical characteristics of the bimetallic element and the dimensions of the helix used. A maximum sensitivity of approximately three angular degrees displacement per Fahrenheit degree may be expected.

13 Accuracy of temperature measurement with a bimetallic thermometer depends on thermometer design, environment under which the measurement is taken, proper immersion, accuracy of the thermometer's calibration, bimetal element thermal stability and observer errors such as parallax.

14 Response of bimetallic thermometers is a function of thermometer design and use conditions. The 63 percent time constant is commonly used in the evaluation of response. Response characteristics of high quality bimetallic thermometers, both laboratory and industrial types, are somewhat similar to those of liquid-in-glass thermometers. High quality bimetallic industrial thermometers will have a time constant of three to four seconds in a well stirred water bath. However, the manufacturer can vary the response by the size of the bimetallic element, by the care he exercises in fitting the bimetallic element to the inside of the protective shell, and by the type of heat transfer material used between the bimetallic element and the shell. Therefore, bimetallic thermometers may have longer response times than specified above. Time constants of 8 to 15 sec are not uncommon.

15 Mechanical Stability of the bimetallic thermometer is affected by severe shock or vibrations which may distort the bimetallic element, thereby producing errors in indication. This distortion does not usually affect the thermal stability of the element and the thermometer may be reset to perform with original accuracy provided the element is not deformed to the point where friction has been introduced into the system. Thermometers with external calibration adjustment screws which rotate the dial are available.

16 Thermal Stability of the bimetallic thermometer is an inherent characteristic of the metals used. Certain bimetallic thermometers may be used up to 1000°F, but prolonged exposure to such temperature levels may produce shifts in calibration; stable continued operation cannot be assured above 800°F.

ACCESSORIES

17 Wells are the major accessories for bimetallic thermometers. Where pressure, corrosion, or erosion indicate the need for greater protection of the bimetallic element than offered by the bulb protective shell, wells should be used. Care should be taken in the selection of the well filling material to avoid materials detrimental to the protective shell of the thermometer bulb being used. For a general discussion of wells refer to Chapter 1.

APPLICATION AND INSTALLATION

18 In order to obtain an accurate temperature measurement, the thermometer stem must be immersed so that the sensitive portion reaches the medium temperature which is being measured. Heat transfer from or to the unimmersed portion of the thermometer must be kept small enough to prevent a significant change in indicated temperature. The proper depth of immersion depends on the stem material, bimetal element length and the temperature and heat transfer environment.

Some bimetallic thermometer designs are suitable for use in shock and vibration environments. Designs exist which are capable of operating under vibration beyond 100 Hz and 10 g acceleration.

19 Other Considerations. When using a bimetallic thermometer the following must be observed:

(*a*) Decide where to place the bulb of the thermometer considering: Does the location selected minimize the shock and vibration to which the instrument is subjected, realizing that pulsation of the fluid on the stem may be as detrimental as motion of the entire unit?

(*b*) Do not use the thermometer if the pointer does not move freely but jumps from point to point with changes in temperature.

(*c*) The thermometer should be tapped lightly before taking any reading.

20 Treatment of Data. The observed temperature readings should be corrected for instrument errors using the calibration correction values. Corrections at temperatures other than standardization temperatures should be determined by linear interpolation. Do *not* apply freezing point or other single point corrections to all points on the scale.

Copyright ASME International
Provided by IHS under license with ASME
No reproduction or networking permitted without license from IHS
Not for Resale

ADVANTAGES AND DISADVANTAGES

21 Advantages

(*a*) Easily read.
(*b*) No ambient temperature correction.
(*c*) Low maintenance.
(*d*) Liquids and gases are not required in the sensing elements.
(*f*) No extensive mechanical linkages.
(*g*) Low purchase cost.
(*h*) Calibration easily adjusted.
(*i*) Not extremely position sensitive.
(*j*) Low weight.

22 Disadvantages

(*a*) Damage due to shock or vibration may not be evident.
(*b*) In the event of excessive pointer vibrations, the thermometer is difficult to read.

REFERENCES

23 The following are suggested references:

"Bimetallic Thermometers," SAMA Standard, PMC-4-1-1962.
"Master Test Code for Temperature Measurement Of Electrical Apparatus," AIEE No. 551, August 1950
Catalog T-B-K, Weston Electrical Instrument Corporation

Copyright ASME International
Provided by IHS under license with ASME
No reproduction or networking permitted without license from IHS
Not for Resale

CHAPTER 9, CALIBRATION OF INSTRUMENTS

CONTENTS

	Par.
GENERAL:	
Scope	1
TEMPERATURE SCALES	2
Thermodynamic Temperature Scale	4
Ideal Gas Scale	6
International Practical Temperature Scale	7
Fixed Points	9
Interpolation Means	10
METHODS OF CALIBRATION:	
Fixed Points	13
Comparison With Primary Standards	14
Primary Standards—	
Standard Platinum Resistance Thermometer	16
Standard Platinum-Rhodium Versus Platinum Thermocouple	25
Optical Pyrometer	31
Comparison With Secondary Standards	35
Secondary Standards—	
Liquid-in-Glass Thermometers	38
Base Metal Thermocouples	39
Optical Pyrometers	41
APPARATUS	42
Comparators—	
Comparators—Metal Block	43
Comparators—Bath Type	44
Mueller Bridge	47
Laboratory Standard Potentiometers	50
RADIATION THERMOMETERS	52
THERMOCOUPLE THERMOMETERS	57
General Considerations—	
General Methods	58
Working Standards	59
Resistance Thermometers	60
Liquid-in-Glass Thermometers	61
Types E and T Thermocouples	62
Types R and S Thermocouples	63
High Temperature Standards	64
Annealing	65
Measurement of Emf	69
Homogeneity	70
General Calibration Methods	75
Calibration Uncertainties	80
Uncertainties Using Fixed Points	82
Uncertainties Using Comparison Methods	84
Freezing Points	87
Melting Points	89
Calibration Using Comparison Methods	90
Laboratory Furnaces	91
Platinum-Rhodium Versus Platinum Thermocouples	92
Base-Metal Thermocouples	103
Stirred Liquid Baths	104
Fixed Installations	107
Interpolation Methods	113
Reference-Junction Corrections	119
Calibration of Thermocouple Materials	123
Platinum	129
Platinum-Rhodium Alloy	131
Base-Metal Thermocouple Materials	134
Reference-Junction Corrections	135
Accuracies Obtainable	137
RESISTANCE THERMOMETERS:	
Comparison With Standard Platinum Resistance Thermometer	140
LIQUID-IN-GLASS THERMOMETERS:	
General—	
General Purpose Liquid-in-Glass Thermometers	143
General Purpose Partial Immersion Thermometers	144
Special Use Partial Immersion Thermometers	145
Visual Inspection:	
General	146
Gas Bubbles	147
Globules of Liquid	151
Foreign Matter	152
Glass Faults	154
Test for Permanency of Pigment	155
Test for Permanency of Range	156
Calibration:	
General Considerations	158
Calibration at Ice Point	159
Calibration at Other Fixed Points	164
Calibration at Temperatures Other Than Fixed Points	165
Checking for Changes In Bulb Volume	172
Treatment of Data	173
FILLED SYSTEM THERMOMETERS	177
OPTICAL PYROMETERS	184
BIMETALLIC THERMOMETERS	191
REFERENCES	199
BIBLIOGRAPHY	200

Copyright ASME International
Provided by IHS under license with ASME
No reproduction or networking permitted without license from IHS
Not for Resale

GENERAL

Scope

1 The purpose of this chapter is to present information which will guide the user in the calibration of instruments used in Performance Test Code work. It includes apparatus required and methods to be used.

TEMPERATURE SCALES

2 Temperature is a measure of thermal potential. Two bodies are at the same temperature when there is no thermal (heat) flow from one to the other. If one body loses heat to another, the first is at a higher temperature.

3 In order to measure temperature it is necessary to have a scale with appropriate units, just as it is necessary in measuring length to have the meter with its subdivisions of centimeter and millimeter, or the yard with its subdivisions, the foot and the inch.

Thermodynamic Temperature Scale

4 The ideal temperature scale is known as the thermodynamic scale. Kelvin has designed this scale to be such that "the absolute values of two temperatures are to one another in the proportion of the heat taken in to the heat rejected in a reversible thermodynamic engine working with a source and refrigerator at the higher and lower temperature, respectively."

5 The temperature scale defined in this manner is independent of the physical properties of any specific substance.

Ideal Gas Scale

6 Theory shows that the thermodynamic scale is identical with that defined by the ideal gas equation of state

$$PV = RT$$

where

P = absolute pressure
V = specific volume
R = gas constant
T = absolute temperature

Reversible heat engines are impossible to construct and gas thermometers are difficult to construct and use under ideal laboratory conditions let alone under industrial test conditions, and are therefore not suitable for general everyday use.

International Practical Temperature Scale

7 Through the years, discussions have been held among the national laboratories of Germany, the United States and the United Kingdom, and in 1927, the International Committee to the Seventh General Conference on Weights and Measures recommended what was then known as the International Temperature Scale. This scale was adopted at that time but further study was continued and in 1948 the Advisory Committee on Thermometry and Calorimetry proposed revisions in the International Temperature Scale of 1927, and this revision was adopted by the Ninth General Conference on Weights and Measures in 1948.

A further refinement of the text of the International Temperature Scale was suggested and adopted in 1960 by the Eleventh General Conference. Also in 1960 the International Committee on Weights and Measures approved a new name "International Practical Temperature Scale of 1948." Inasmuch as the numerical values of temperature on this scale are the same as in 1948, this scale is not a revision of the scale of 1948 but merely a revision of its text.

In October 1968, the International Committee on Weights and Measures, as empowered by the Thirteenth General Conference, adopted eight major changes in the international empirical temperature scale, as recommended by the Advisory Committee on Thermometry. The changes incorporated in IPTS – 68 are:

(*a*) The name kelvin and the symbol K are taken to designate the unit of thermodynamic temperature.
(*b*) All values assigned to the defining fixed points are changed (except for that of the triple point of water) to conform as closely as possible to the corresponding thermodynamic temperatures.
(*c*) The lower limit of Range 1 is changed from the boiling point of oxygen to the triple point of hydrogen.
(*d*) The standard instrument to be used in Ranges 1 and 2 is the platinum resistance thermometer

Copyright ASME International
Provided by IHS under license with ASME
No reproduction or networking permitted without license from IHS
Not for Resale

with R_{100}/R_0 tightened from 1.3920 to 1.3925.

(*e*) Range 1 is now divided into four parts:
Part 1 extends from the triple point to the boiling point of hydrogen.
Part 2 extends from the boiling point of hydrogen to the triple point of oxygen.
Part 3 extends from the triple point to the boiling point of oxygen.
Part 4 extends from the boiling point of oxygen to the freezing point of water.

(*f*) In Range 1, the Callendar-Van Dusen equation is no longer used, but interpolation is by a new reference function

$$T_{68} = \left[273.15 + \sum_{i=1}^{20} A_i (ln\ W_{REF})^i \right], \text{ K} \qquad (9.1)$$

The reference resistance ratio represented by W_{REF} is defined by

$$W_{REF} = W_M - \Delta W$$

where W_M is the measured resistance ratio, R_T/R_0, and ΔW is a deviation defined by a specific polynominal interpolation equation, one being given for each part of Range 1.

(*g*) In Range 2, the Callendar equation is modified by a correction term so that interpolated values of temperature will conform more closely with thermodynamic temperatures; i.e.,

$$t_{68} = t' + \Delta t \qquad (9.2)$$

where t' is temperature by the Callendar equation; and Δt is a correction term given by

$$\Delta t = 0.045 \left(\frac{t'}{100}\right) \left(\frac{t'}{100} - 1\right) \left(\frac{t'}{419.58} - 1\right) \left(\frac{t'}{630.74} - 1\right) \qquad (9.3)$$

(*h*) In Range 4, the second radiation constant, C_2, is changed from 0.01438 meter kelvins to 0.014388 meter kelvins.

8 By design, IPTS-68 has been chosen in such a way that temperatures measured on it closely approximate thermodynamic temperatures; i.e. differences are within the limits of the present accuracy of measurement.

9 Fixed Points. IPTS-68 is based on 11 reproducible temperatures (defining fixed points), to which numerical values are assigned, and on formulas establishing the relation between temperature and the indications of instruments calibrated by means of values assigned to the defining fixed points. These fixed points are defined by specified equilibrium states, each of which is under a pressure of 1 standard atmosphere, except where noted differently. The defining fixed points and the exact numerical values assigned to them are given in Table 9.1.

10 Interpolation Means. The means available for interpolating temperatures led to the division of the scale into four parts, using three different instruments for interpolation as detailed in Table 9.2.

11 It should be understood that temperature scales and their units are arbitrary considerations. IPTS-68 is a document not a device. While the IPTS-68 is the basic scale having 100 units or degrees between the ice point and the steam point, the Fahrenheit scale having 180 units or degrees between these two points is commonly used in engineering practice. The relationship between these two scales is given in Chapter 1.

METHODS OF CALIBRATION

Fixed Points

12 A precise method of calibration is that of determining the reading of an instrument at one or more of the defining fixed points which are listed in Table 9.1.

TABLE 9.1 SUMMARY OF FIXED-POINT VALUES

Defining Fixed-Points	IPTS-68	
	°C	K
t.p. hydrogen	−259.34	13.81
b.p. hydrogen, 25/76 atm	−256.108	17.042
b.p. hydrogen	−252.87	20.28
b.p. neon	−246.048	27.102
t.p. oxygen	−218.789	54.361
b.p. oxygen	−182.962	90.188
f.p. water	0.0	273.15
t.p. water	+0.01	273.16
b.p. water	100	373.15
f.p. zinc	419.58	692.73
b.p. sulfur	444.674	717.824
f.p. silver	916.93	1235.08
f.p. gold	1064.43	1337.58

Copyright ASME International
Provided by IHS under license with ASME
No reproduction or networking permitted without license from IHS
Not for Resale

TABLE 9.2 INTERPOLATION MEANS

Range 1	
Temperature limits	13.81 to 273.15 K
Interpolating relation	Reference function Eq. (9.1)
Interpolating instruments	Platinum resistance thermometer
Range 2	
Temperature limits	0 to 630.74°C
Interpolating relation	Modified Callendar Eq. (9.2)
Interpolating instruments	Platinum resistance thermometer
Range 3	
Temperature limits	630.74 to 1064.43°C
Interpolating relation	Parabola
Interpolating instruments	Platinum 10% rodium vs. platinum thermocouple
Range 4	
Temperature limits	Above 1064.43°C
Interpolating relation	Planck's law
Interpolating instruments	Optical pyrometer

13 Calibration at fixed points requires specialized equipment and painstaking techniques. Standard resistance thermometers and standard platinum-platinum-rhodium thermocouples are calibrated at fixed points for use as primary standards. These are then used for the calibration of other instruments. It is good practice to have these two devices calibrated by the National Bureau of Standards or other laboratory similarly qualified.

Comparison With Primary Standards

14 The common method of calibrating an instrument is to compare its readings with those of primary or secondary standards at temperatures other than fixed points, which are produced in comparators described in Pars. 43 to 46, inclusive.

15 The primary standards are the platinum resistance thermometer, the platinum-rhodium vs. platinum thermocouple and the narrow-band optical pyrometer.

Primary Standards

16 Standard Platinum Resistance Thermometer. Standard platinum resistance thermometers are commercially available from a number of sources.

17 They are so designed and constructed that the wire of the platinum resistor is as nearly strain-free as practicable and will remain so during continued use. The most suitable platinum wire is that drawn from a fused ingot, not from forged sponge.

18 Satisfactory thermometers have been made with wire as small as 0.05 mm and as large as 0.5 mm in diameter, a short portion of each lead adjacent to the resistor being made of platinum and continuing with gold wire through the region of temperature gradient. The completed resistor of the thermometer is annealed in air at a temperature not lower than about 840°F, or if it is to be used at temperatures above 840°F, at a temperature higher than the highest temperature at which it is to be used. The tube protecting the completed resistor is usually filled with gas containing some oxygen.

19 A useful criterion, which serves as a safeguard against inferior construction of the completed thermometer and against errors in the calibrations at the fixed points, is that

$$(R_S - R_F) / (R_B - R_F)$$

where

R_S = resistance at sulfur point
R_F = resistance at ice point
R_B = resistance at steam point

should be between 4.2165 and 4.2180. Similarly, if the thermometer is calibrated for use in the range below 32°F, the ratio,

$$(R_S - R_{O_2}) / (R_B - R_F)$$

where R_{o_2}, the resistance at the oxygen point, should be between 6.143 and 6.144. The constancy of resistance at a reference point, such as the triple point of water (or the ice point), before and after use at other temperatures, is also a valuable criterion of the adequacy of the annealing and the reliability of the thermometer in service.

20 Also, the platinum shall be of such purity that the ratio R_B/R_F is greater than 1.3925.

21 The standard resistance thermometer is used for comparison in the range 32°F to the freezing point of antimony at 1167.3°F. In this range the temperature is defined by the formula:

$$R_t = R_o (1 + At + Bt^2)^*$$

*All temperatures in °C.

Copyright ASME International
Provided by IHS under license with ASME
No reproduction or networking permitted without license from IHS
Not for Resale

where R_t is the resistance, at temperature t, of the platinum resistor between the branch points formed by the junctions of the current and potential leads of a standard resistance thermometer. The constant, R_o is the resistance at 0°C (32°F), and the constants, A and B, are to be determined from measured values of R_t at the steam and zinc points.

22 From the oxygen point to 0°C (32°F), the temperature, t, is defined by Eq. (9.1).

23 For easier use in temperature measurement, the interpolation formulae, for the range 0°C (32 F) to the freezing point of antimony are in Eqs. (9.2) and (9.3).

24 Standard platinum resistance thermometers should be calibrated periodically by the National Bureau of Standards or equally qualified agency.

25 Standard Platinum-Versus Platinum Rhodium Thermocouple. From the freezing point of antimony at 1167.3°F to the gold point at 1947.97°F, the standard platinum 90 percent-rhodium 10 percent versus platinum thermocouple is used.

26 The temperature, t, is defined by the formula:

$$E = a + bt + ct^2,$$

where E is the electromotive force of a standard thermocouple of platinum-rhodium and platinum alloy when one junction is at 32°F and the other is at the temperature t. The constants, a, b, and c, are to be calculated from the measured values of E at the freezing point of antimony and at the silver and gold points.

27 The platinum wire of the standard thermocouple is annealed and of such purity that the ratio $R_{212}\,°F/R_{32}\,°F$ is greater than 1.3920. The alloy wire shall consist nominally of 90 percent platinum and 10 percent rhodium by weight. When one junction is at 32°F, and the other at the freezing point of antimony (1167.3°F), silver, or gold, the completed thermocouple has electromotive forces, in microvolts, such that

$$E_{Au} = 10{,}300 \pm 50\mu V$$

$$E_{Au} - E_{Ag} = 118.3 + 0.158\,(E_{Au} - 10{,}300) \pm 4\mu V$$

$$E_{Au} - E_{Sb} = 476.6 + 0.631\,(E_{Au} - 10{,}300) \pm 8\mu V$$

28 Satisfactory standard thermocouples have been made of wires not less than 0.35 mm and not more than 0.65 mm in diameter. Before calibration, the wires of the couple are annealed in air for an hour at about 2000°F. The wire of the thermocouple is mounted so as to avoid all mechanical constraints in the region where steep temperature gradients are likely to occur.

29 The primary standard platinum-rhodium versus platinum thermocouple is used in the calibration of other thermocouples and also in the checking and calibration of optical pyrometers below a temperature of 2750°F.

30 Standard platinum-rhodium versus platinum thermocouples should be calibrated periodically by the National Bureau of Standards or equally qualified laboratory.

31 Optical Pyrometer. Unlike the standard platinum resistance thermometer and the standard platinum-rhodium versus platinum thermocouple, there is no device such as an optical pyrometer, which when constructed according to a set of specifications, has a calibration approaching that of the International Practical Temperature Scale.

32 While Planck's formula leads to

$$\frac{J_t}{J_{Au}} = \frac{\exp\,(c_2 / \lambda T_{Au}) - 1}{\exp\,(c_2 / \lambda T) - 1}$$

in which

J_t and J_{Au} = the radiant energies per unit wavelength interval at wavelength, λ, emitted per unit time by unit area of a blackbody at temperature T, and at the gold point T_{Au}, respectively.

c_2 = 1.4388 cm K

λ = a wavelength of the visible spectrum, cm

e = base of Naperian logarithm.

which defines IPTS-68 above the gold point, a narrow-band optical pyrometer must be calibrated at a number of points using this formula, in order to produce a means for extrapolation above the gold point.

33 Calibration is done by sighting the pyrometer on a blackbody maintained at the gold point. Rotating sectors of known transmission characteristics are then interposed between the blackbody and the pyrometer, and calibration at points higher than the

Copyright ASME International
Provided by IHS under license with ASME
No reproduction or networking permitted without license from IHS
Not for Resale

gold point is calculated based on the ratio of the energy received through the sector disks to that received at the gold point.

34 Standard optical pyrometers should be calibrated periodically by the National Bureau of Standards or equally qualified laboratory.

Comparison With Secondary Standards

35 Secondary standards are satisfactory for the calibration of many devices, particularly liquid-in-glass thermometers, bimetallic thermometers, filled system thermometers, base-metal thermocouples, and optical pyrometers, where the highest degree of accuracy is not required.

36 The secondary standards are liquid-in-glass thermometers, base-metal thermocouples, and optical pyrometers. The first two are calibrated by comparing them with primary standard platinum resistance thermometers or standard platinum-rhodium versus platinum thermocouples at temperatures which are produced in comparators described in Pars. 43 to 46, inclusive. Optical pyrometers are compared with primary standard optical pyrometers as described in Pars. 184 to 190, inclusive.

37 The test thermometer or thermocouple readings are then compared with those of the secondary standard at temperatures other than fixed points, which are produced in comparators described in Pars. 43 to 46, inclusive. Test optical pyrometer readings are compared with those of the secondary standard optical pyrometer as described in Pars. 184 to 190, inclusive.

Secondary Standards

38 Liquid-in-Glass Thermometers, when used as secondary standards, may be classified into two groups, those intended for testing *general purpose total immersion thermometers* and those intended for checking *partial immersion thermometers.*

(*a*) In the case of *general purpose total immersion thermometers,* the sensitivity of the thermometers to be tested will govern the choice of standard. For thermometers graduated in 1, 2 or 5 deg divisions, a set of well-made thermometers will be adequate when used with applicable corrections. For fractionally graduated thermometers the following set is recommended [1].*

ASTM Thermometer Number	Range, °F	Divisions, Deg F	Length (mm)
62 F	-36 to +35	0.2	380
63 F	18 to 89	0.2	380
64 F	77 to 131	0.2	380
65 F	122 to 176	0.2	380
66 F	167 to 221	0.2	380
67 F	203 to 311	0.5	380
68 F	293 to 401	0.5	380
69 F	383 to 581	1.0	380
70 F	563 to 761	1.0	380

The foregoing set is standardized for total immersion. With the exception of the first two, each thermometer is provided with an auxiliary scale including 32°F, thus each of the thermometers in this series is provided with means for checking at the ice point, which should be done each time the thermometer is used. The change in ice point reading should then be applied to all readings. Normally, a single complete standardization is adequate.

(*b*) *General purpose partial immersion thermometers,* as commonly listed in manufacturers' catalogs according to their own specifications, are normally bought and sold without specification of the temperatures of the emergent column for the various temperature indications of the thermometers. In such cases, standardization is usually carried out for the emergent column temperatures prevailing with the standardization equipment being employed.

(*c*) *Special use partial immersion thermometers* may have their emergent mercury column or stem temperatures specified. Cognizance of those specified temperatures may be taken in various ways. One method involves comparison of the thermometers at total immersion with total immersion standards. The number of degrees of scale which will be in the emergent column when in actual use shall then be measured. From these data the corrections under the specified emergent column temperatures may then be calculated. In the case of organic liquid-filled thermometers the coefficient of expansion of the liquid should be obtained by experiment or from the manufacturer in order to perform these computations. This method has the advantage that the standard may be selected to have greater sensitivity than the thermometer being tested, thus increasing the accuracy of measurement. A second method, which is the one best

*Numbers in brackets indicate References at end of chapter, thus [1].

Copyright ASME International
Provided by IHS under license with ASME
No reproduction or networking permitted without license from IHS
Not for Resale

suited to large-quantity testing, involves comparison of the thermometers with standards similar in all details in construction above the immersion point, but differing below the immersion point to the extent of including an auxiliary ice point scale. Such thermometers, when completely standardized, as by the National Bureau of Standards, may then be employed indefinitely for standardization purposes if periodic ice point checks are made.

39 Base Metal Thermocouples may be standardized for use as secondary standards by the National Bureau of Standards or by the user against platinum-rhodium versus platinum thermocouples.

40 Individual thermocouple elements can also be standardized against platinum and used as secondary standards for the calibration of similar thermocouple wire comparison.

41 Optical pyrometers can be standardized against other optical pyrometers that have been calibrated by the National Bureau of Standards and used to calibrate other optical pyrometers by comparison.

APPARATUS

42 American Society for Testing Materials Standard E77-70 is the basis for the material in this section.

Comparators

43 Comparators–Metal Block. An oven suitable for testing for foreign matter in the bore and for permanency of pigment is illustrated in Fig. 9.1. An air bath suitable for the permanency of range test is illustrated in Fig. 9.2.

44 Comparators–Bath Type. Comparators for use in standardization are of two types, fixed-point or

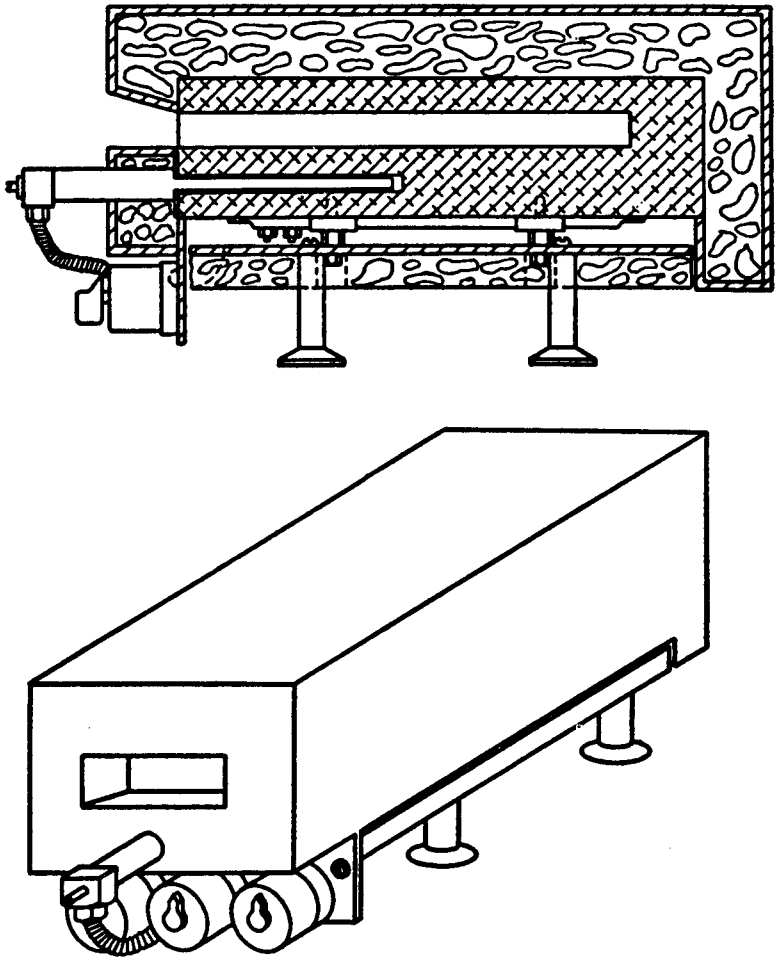

FIG. 9.1 OVEN FOR PERMANENCY OF PIGMENT TEST

Copyright ASME International
Provided by IHS under license with ASME
No reproduction or networking permitted without license from IHS
Not for Resale

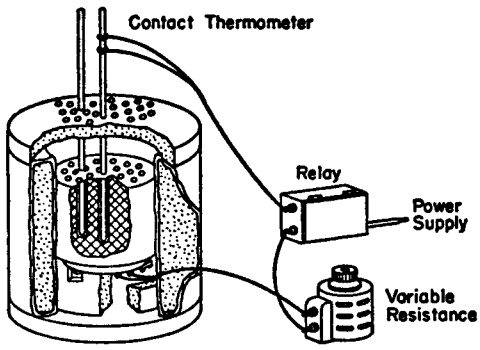

FIG. 9.2 AIR BATH FOR PERMANENCY OF RANGE TEST

variable. Certain general requirements should be met by all such comparators and their accessory equipment. All readings of liquid-in-glass thermometers should be observed, using an optical device suitable for observing vertical motions. Focusing range should start from not more than 20 cm, magnification should be about 5 to 10 diameters, and the field about 1.5 cm. The eyepiece should be provided with 90 deg cross hairs and may include an erecting prism. Vertical movement should total approximately 30 cm and may be obtained both with rough and delicate adjustment. A suitable instrument is illustrated in Fig. 9.3; component parts are available commercially.

45 Heat input should be capable of accurate continuous control to meet the requirement of a very slowly rising temperature at the test point. For best results an alternating current power supply is recommended in conjunction with variable transformers. Such transformers are available commercially in various capacities. Other types of voltage regulators, such as the so-called induction type, may be used. While generally more expensive, they are capable of finer adjustment.

46 In all test baths a properly located well or other suitable provision should be made for using a platinum resistance thermometer as the ultimate primary standard.

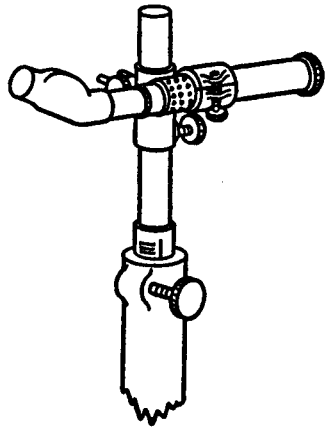

FIG. 9.3 MAGNIFIER FOR READING THERMOMETER

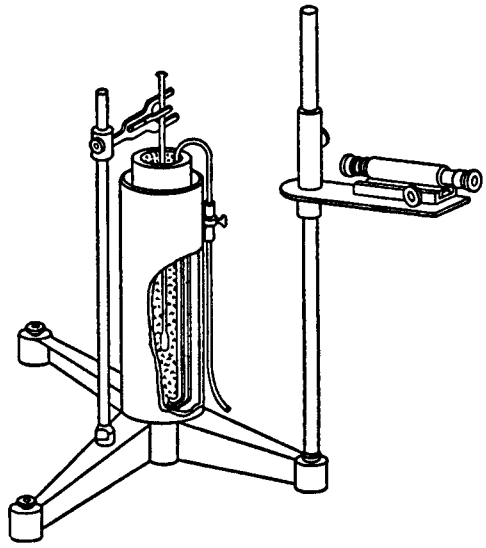

FIG. 9.4 APPARATUS FOR STANDARDIZATION OF ICE POINT

(*a*) *Comparators, Fixed Point.* The most common and also most useful of the fixed point type comparators is the ice point apparatus. Fig. 9.4 illustrates a typical setup, consisting of a Dewar flask, a thermometer holder, a viewing telescope of 10X magnification, and the necessary supports and siphon tube for withdrawing excess water. A suitable ice-shaving machine is a desirable adjunct. For readings to one-tenth of a division on liquid-in-glass thermometers, the viewing telescope is necessary, but observing the temperature with the unaided eye is satisfactory provided poorer precision or accuracy is satisfactory.

Other fixed-point comparators for use at the triple point of water, steam point, sulfur point, and at secondary points such as the benzoic acid points, are described in publications of the National Bureau of Standards and the Massachusetts Institute of Technology.

Copyright ASME International
Provided by IHS under license with ASME
No reproduction or networking permitted without license from IHS
Not for Resale

(*b*) *Comparators, Variable Temperature.* For standardization at other than fixed points, the variable temperature-type comparators are used. Figs. 9.5, 9.6, 9.7, 9.8, and 9.9, illustrate various types of such units for use in the range −256 to +1000°F. All of these units basically consist of a well-stirred, insulated liquid bath provided with suitable controls for maintaining the temperature either constant or uniformly increasing. As with the ice point equipment, a viewing telescope is necessary for precision of one-tenth of a scale division on liquid-in-glass thermometers. The liquids used in the comparators are chosen to fulfill the following requirements: low viscosity, nonflammability, nontoxicity, and freedom from other offensive characteristics in the various temperature ranges in which they are to be used.

(1) *Comparators for the range from −256 to −103°F.* For comparison in the range from −256 to −103°F, which is below the sublimation point of solid carbon dioxide, liquid nitrogen is used as the cooling medium for an isolated bath filled with some low-boiling hydrocarbon such as isopentane. A suitable bath for this purpose is illustrated in Fig. 9.5 and is described in detail in ASTM Method E77-70.

The evacuable flask in Fig. 9.5 is positioned in the larger container by three cork wedges strung on a wire. It must extend above the nitrogen container enough so that nitrogen may be added without spilling into the isopentane. The aluminum block is completely covered with isopentane and the space between the two Dewar flasks filled with liquid nitrogen. A loose fitting cardboard shield with holes is placed over the top to reduce condensation and convection. When the system has cooled to a few degrees above the desired temperature, the inner flask is evacuated by the pump to stabilize the tem-

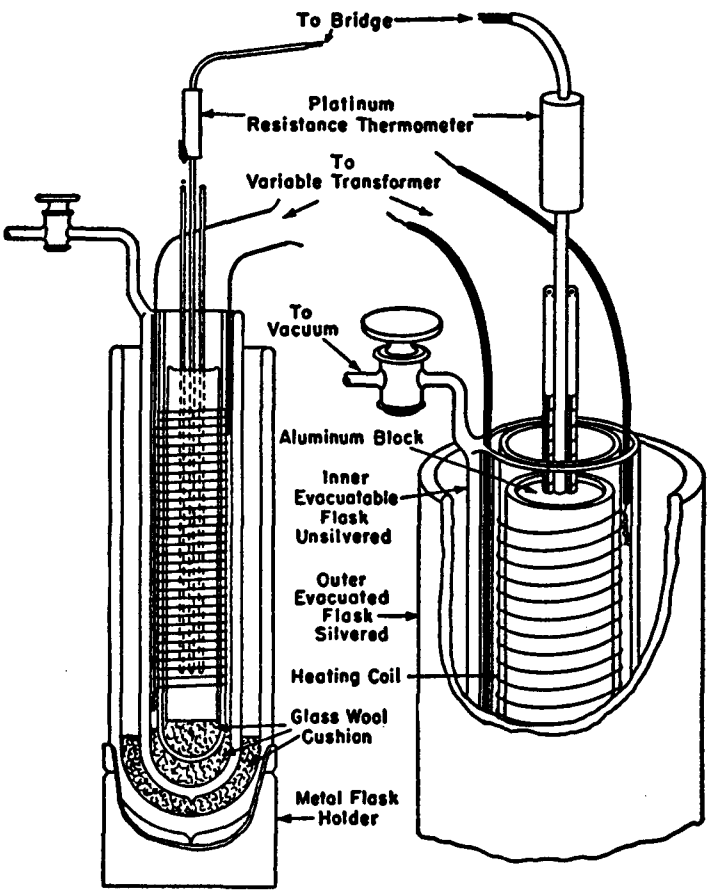

FIG. 9.5 COMPARATOR FOR TEMPERATURE RANGE FROM −256 TO −103°F

Copyright ASME International
Provided by IHS under license with ASME
No reproduction or networking permitted without license from IHS
Not for Resale

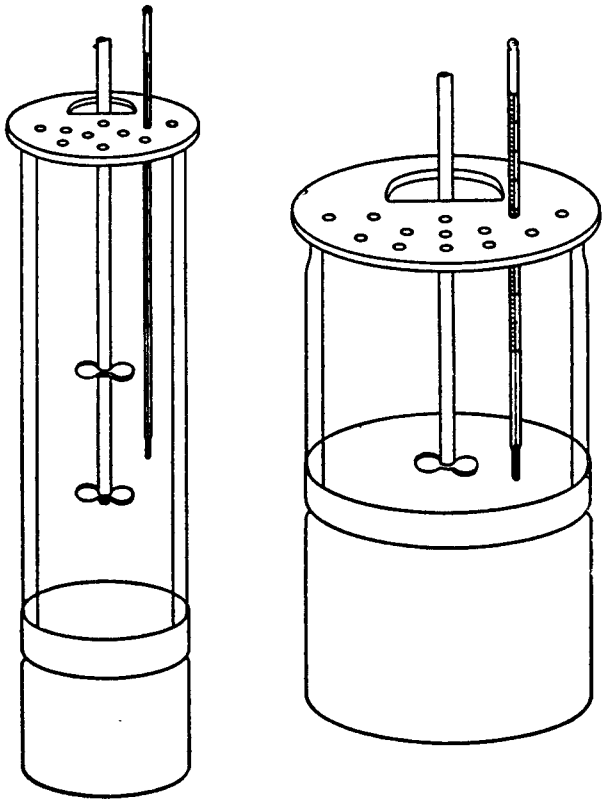

FIG. 9.6 COMPARATOR FOR TEMPERATURE RANGE FROM −112 TO +41°F

perature equilibrium in the test tube. (When testing in the range of −250°F, this evacuation is not necessary.) At the desired test temperature, heat transfer is exactly balanced by means of the heating coil. It will be necessary to agitate the isopentane by raising and lowering the thermometer, but any vigorous stirring at low temperatures will generate enough heat to make difficult the maintaining of proper equilibrium. Certain safety precautions must be carefully observed. Some of the more important are as follows:

(*a*) Because liquid nitrogen has a lower absolute boiling point than liquid air, substantial quantities of liquid air or atmosphere moisture, or both, will condense within the walls of the evacuable flask. Therefore, the flask should never be warmed without being vented to the atmosphere or under vacuum and should always be vented through a drying tube.

(*b*) Liquid air or liquid oxygen or a mixture of them, should never be used as the refrigerant.

(*c*) At all times the level of the pentane should be slightly above the surface of the aluminum block. Whenever fresh chilled pentane is added, care must be taken not to spill any on the heating coil.

(*d*) The heating coil should be attached to the variable transformer by means of thoroughly insulated leads.

(2) *Comparators for the Range from −112 to +41°F.* For temperature testing in the range from −112 to +41°F, as indicated in Fig. 9.6, two baths are recommended—one for primary elements requiring a long depth of immersion and the other for short immersion. In either case the bath shall consist of a Dewar-type vacuum flask, the walls of which may or may not be silvered as required. Normally the unsilvered is preferred. These baths are commercially available and are described in detail in ASTM E77-70.

The bath medium may be either alcohol, light hydrocarbon, or other organic solvent, such as the carbon tetrachloride-chloroform eutectic (49.4 percent carbon tetrachloride, 50.6 percent chloroform) or trichlorethylene. If a water miscible solvent is used, the water content must be not more than 5 percent. cent.

In use the proper bath is partly filled with the bath medium. Dry ice is added slowly to prevent bubbling over. At the same time another portion of the liquid, sufficient to fill the bath and an extra amount to serve as a precooling bath, is similarly chilled in a second container. When the two are near the proper temperature, the testing bath is filled and brought to temperature. The thermometers to be tested and the standard may be precooled in the standby bath to approximately the desired temperature before testing. If large batches of thermometers are to be tested, this precooling will materially shorten the time required.

(3) *Comparators for the Range from 41 to 200°F.* In the range from 41 to 200°F a comparator as illustrated in Fig. 9.7, or its equivalent, may be used. It consists of a heavy wall

Copyright ASME International
Provided by IHS under license with ASME
No reproduction or networking permitted without license from IHS
Not for Resale

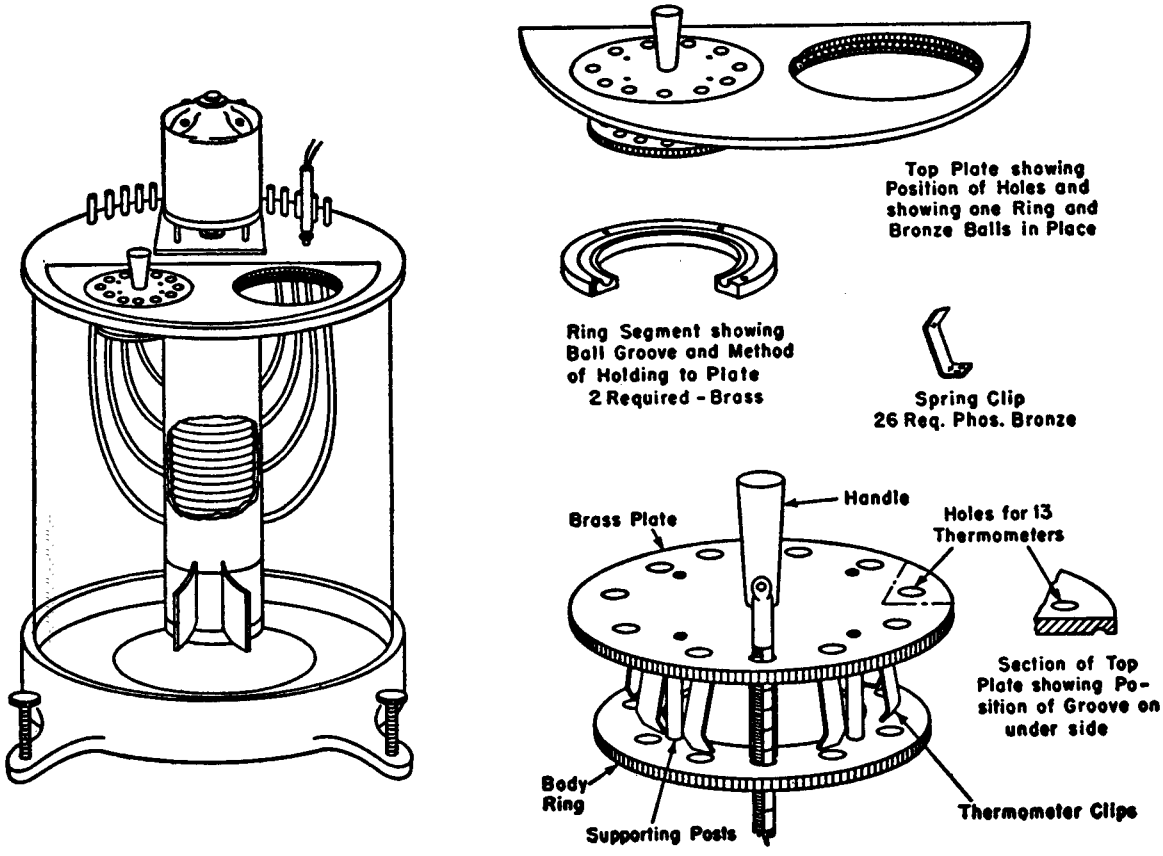

FIG. 9.7 COMPARATOR FOR TEMPERATURE RANGE FROM 41 to 200°F

Pyrex jar suitably supported and equipped with heaters, cooling coil, and stirring equipment. A commercially available bath provided with controls to maintain constant or very slowly rising temperature throughout the testing range and with a top cover having a large opening is shown in Fig. 9.7. For liquid-in-glass thermometer testing an insert equipped with two rotary holders made as shown in Fig. 9.7 is provided. Each of these holders is a flat plate resting on a number of ball bearings so that the plate may easily be spun to bring any particular thermometer into view. Positive heat distribution to all parts of the bath and thorough circulation are obtained by a unique assembly of cooling and heating coils in a cylindrical housing which also surrounds the stirring propeller. The bath should be filled with distilled water. An alternative design is illustrated in Fig. 9.8(a).

(4) *Comparators for the Range from 190 to 700°F.* In the range 190 to 700°F a comparator as illustrated in Figs. 9.8(a) or 9.8(b) may be used.

Suitable high-flash point oils should be used. At the higher temperatures great care must be taken to avoid dangerous flash fires which may occur, particularly on removal of thermometers or thermometer holder. A solid cover plate to replace the thermometer holder as well as adequate fire protection equipment of the carbon dioxide type, should be provided.

(5) *Comparators for the Range from 450 to 1000°F.* A satisfactory comparator for the range 450 to 1000°F is a salt bath. A type having a tube arrangement immersed in the pot of a commercial heat treating bath is illustrated in Fig. 9.9. Welded or riveted pots should under no circumstances be used. External electrical heating is commonly practiced, although gas fired units may be purchased and have been used successfully.

Care should be exercised, particularly above 752°F, to avoid bringing any organic matter

Copyright ASME International
Provided by IHS under license with ASME
No reproduction or networking permitted without license from IHS
Not for Resale

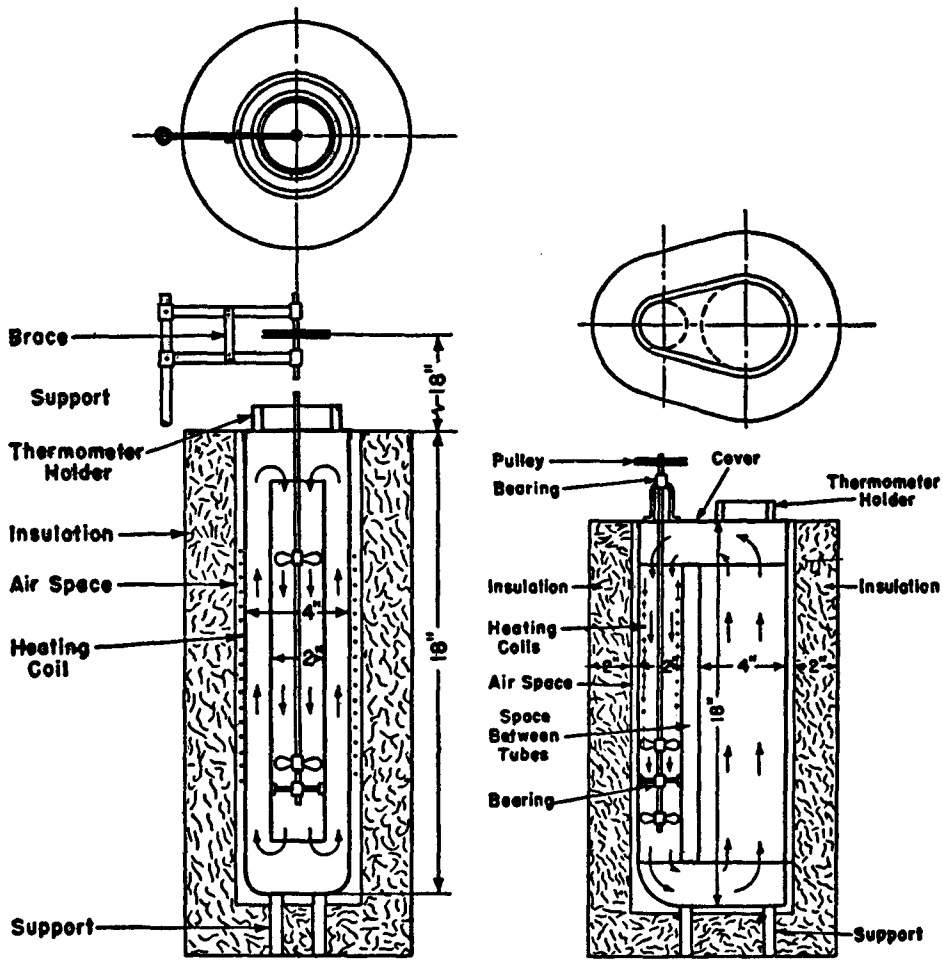

(a) Stirred Liquid Bath with Two Coaxial Tubes.

(b) Stirred Liquid Bath with Two Tubes Connected at Top and Bottom.

FIG. 9.8 ALTERNATIVE DESIGNS OF COMPARATORS FOR TEMPERATURE RANGES FROM 190 to 700°F

or low boiling liquid, such as water, in contact with the molten salt, since dangerous fires or explosions may occur. The bath should be heated up slowly at the start to avoid the formation of pockets of molten salt which have a tendency to blow out the solid mass with disastrous results. The bath should be covered while heating until approximately 25 percent of the salt has melted.

A salt comprised of 50 percent sodium nitrate and 50 percent sodium nitrite is suggested.

At the lower temperatures the thermometers or thermocouples may be immersed directly in the salt, but at the higher temperatures attack of the glass may occur. This can be avoided by using steel wells immersed in the molten salt into which the thermometers or thermocouples are placed. Thin walled steel tubes closed at one end are suitable for this purpose.

Comparators with molten tin as the bath liquid have been used successfully in this temperature range. Details of design, construction, and use may be obtained from the National Bureau of Standards.

Mueller Bridge

47 When calibrating resistance thermometers by comparison with a standard platinum resistance thermometer, a bridge of the Mueller type is commonly used. The circuit is shown in simplified

Copyright ASME International
Provided by IHS under license with ASME
No reproduction or networking permitted without license from IHS
Not for Resale

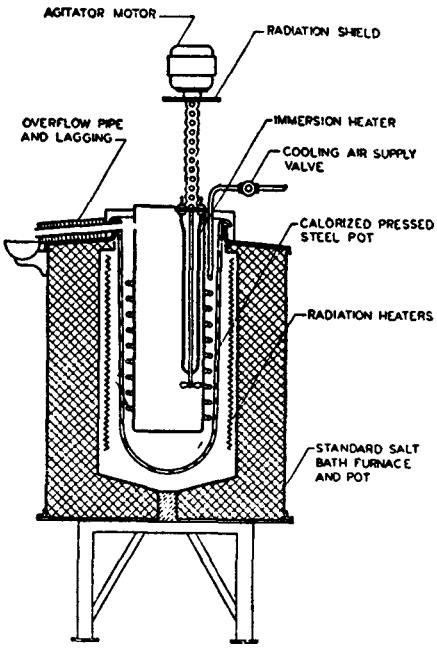

FIG. 9.9 SALT BATH COMPARATOR FOR TEMPERATURE RANGE FROM 450 TO 1000°F

form in Fig. 9.10; Q and Q_1 are equal ratio arms of from 250 to 1000 ohms each, adjustable to equality by means of the sliding contact of the battery circuit on the slide-wire S. The resistance decades A and B are permanently connected into the galvanometer circuit. Increasing the setting of A inserts resistance directly into the measuring arm. Increasing the setting of B takes resistance out of the thermometer arm, which is equivalent to putting resistance into the measuring arm. Contact resistances in these decades are in series with the high resistance ratio arms Q and Q_1, and their variations are, therefore, negligible. Contact resistance in the three decades D, E, and F (0.01, 0.001, and 0.0001 ohm decades) have a negligible effect, because the resistance variation is secured by changing a comparatively high resistance in series with the contact, shunting a resistor of low value. The bridge as shown is adapted for use with three-lead thermometers, but to make full use of its available accuracy a four-lead thermometer with a commutator for connecting its leads three at a time to the bridge should be used. The commutation of the leads eliminates errors resulting from slight inequalities of lead resistances. With these precautions the resistance measurements can be made within a limit of error of ±0.0001 ohm, or ±0.02 percent of the measured resistance, whichever is larger. With a three-lead thermometer the limit of error is dependent on the care with which the A and C leads are adjusted to equality, but is approximately ±0.001 ohm or ±0.03 percent of the measured resistance, whichever is larger.

48 Mueller bridges should be calibrated periodically by the National Bureau of Standards or equally qualified laboratory.

49 The National Bureau of Standards publication entitled "Notes to Supplement Resistance Thermometer Certificates, January 1, 1949" includes de-

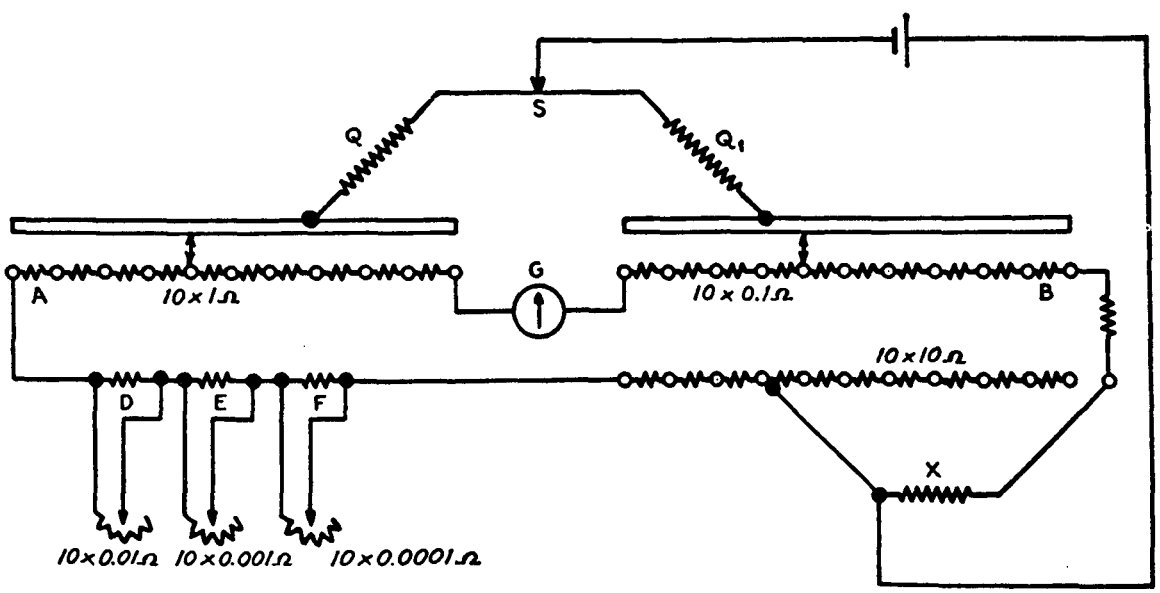

FIG. 9.10 DIAGRAM OF MUELLER BRIDGE

Copyright ASME International
Provided by IHS under license with ASME
No reproduction or networking permitted without license from IHS
Not for Resale

tailed instructions for checking the self-consistency of calibration of Mueller bridges.

Laboratory Standard Potentiometer

50 Laboratory High Precision Potentiometers are used in the calibration of all types of thermocouples and thermocouple materials. They should be calibrated periodically by the National Bureau of Standards or other laboratory similarly qualified.

51 Refer to Chapter 3, Section B of this Supplement for principles of operation and types of Laboratory Potentiometers available.

RADIATION THERMOMETERS

52 Calibration of a radiation thermometer consists in measuring the emf which it produces when focused on a source, the apparent temperature of which has been measured with a standardized radiation thermometer which follows the same power law as the radiation thermometer under test.

53 It is not necessary that the source be a black body to make this calibration valid, but it should be nonselective in its emissivity; that is, have the same emissivity throughout its spectrum. It is, therefore, permissible to make use of a method of calibration which has been found to be convenient in routine calibrations.

54 The source is a furnace which is maintained at a constant temperature; for example 2400°F Lower temperatures are simulated by interposing a rotating sector disk between the source and the radiation thermometer, and the apparent temperature measured by means of a standard radiation thermometer. To make this method of calibration valid, the two radiation thermometers being compared must follow the same power law, because the spectral distribution of the radiation from a source at 2400°F. is quite different from that for a black body at the measured apparent temperature.

55 In all cases the dimensions of the furnace opening should be such that the field-of-view requirements of the radiation thermometer are satisfied.

56 Manufacturers will supply data for checking equipment if requested.

THERMOCOUPLE THERMOMETERS

57 Much of this material in this section is based upon National Bureau of Standards Circular 590, "Methods of Testing Thermocouples and Thermocouple Materials," dated February 6, 1958, and the calibration methods appearing in Chapter 8, of the "Manual On The Use of Thermocouples In Temperature Measurement", STP 470, American Society for Testing and Materials.

General Considerations

58 General Methods. The calibration of a thermocouple consists of the determination of its electomotive force (emf) at a sufficient number of known temperatures so that, with some accepted means of interpolation, its emf will be known over the entire temperature range in which it is to be used. The process requires a standard thermometer to indicate temperatures on a standard scale, a means for measuring the emf of the thermocouple, and a controlled environment in which the thermocouple and the standard can be brought to the same temperature. Some of the more commonly used techniques for accomplishing such calibrations will be discussed in this section.

59 Working Standards. Any one of several types of thermometers, calibrated in terms of the IPTS, may be used as a working standard for the calibration of thermocouples. The choice will depend upon the temperature range covered, whether a laboratory furnace or a stirred liquid bath is used, the accuracy expected of the calibration, or in cases where more than one type will suffice, the convenience or preference of the calibrating laboratory.

60 Resistance Thermometers. The standard platinum resistance thermometer is the most accurate standard for use from approximately −253°C (−423°F) to 630.5°C (1167°F). In cases where an uncertainty approaching 0.1°C is necessary at temperatures below −56°C (−69°F) or above about 200°C (392°F) there are few alternatives to the use of resistance thermometers as standards.

61 Liquid-in-Glass Thermometers. This type of thermometer may be used from approximately −183°C (−297°F) to 400°C (752°F), or even higher with special types. Generally, the accuracy of these thermometers is less below −56°C (−69°F), where organic thermometric fluids are used, and above 300°C (572°F) where instability of the bulb glass may require frequent calibration. Specifications for ASTM liquid-in-glass thermometers are given in ASTM E1-71.

Copyright ASME International
Provided by IHS under license with ASME
No reproduction or networking permitted without license from IHS
Not for Resale

62 Types E and T Thermocouples. Either of these types of thermocouples may be used down to a temperature of −183°C (−297°F) or lower, but the attainable accuracy may be limited by the accuracy of the emf measurements and the inhomogeneity of the wire at low temperatures. The stability of the larger sizes of wire is greater than that of smaller wires under the same conditions. Twenty-four gage wire is a useful compromise between the lesser stability of smaller wire and the greater thermal conduction (greater required depth of immersion) of larger wire. Recommended upper limits are 425°C (797°F) for the Type E and 200°C (392°F) for Type T.

63 Types R and S Thermocouples. The Type S or Type R thermocouple is the most satisfactory working standard for use in the range from 630.5°C (1167°F) up to about 1200°C (2192°F). Its use may be extended down to room temperature if it is desired to use the same standard over a wide range, but its sensitivity falls off appreciably as temperatures below 200°C (392°F) are reached. Twenty-four gage wire is most commonly used for these standards.

64 High Temperature Standards. The IPTS above 1064.43°C (1946°F) is defined in terms of ratios of radiant energy, the ratios usually being measured by means of an optical pyrometer. The optical pyrometer, sighted on a blackbody cavity built into the calibration furnace, therefore, can serve as a working standard for all temperatures above 1064.43°C. On the other hand, thermocouples, calibrated on the optical pyrometer scale, can themselves be used as standards. The Type B thermocouple is useful up to about 1600°C (2912°F). Tungsten rhenium alloys can be used to higher temperatures, but the optical pyrometer is more commonly used.

65 Annealing. Practically all base-metal thermocouple wire is annealed or given a "stabilizing heat treatment" by the manufacturer. Such treatment is generally considered sufficient, and seldom is it found advisable to further anneal the wire before testing.

66 Although new platinum-rhodium versus platinum thermocouple wire as sold by some manufacturers is already annealed, it has become regular practice in many laboratories to anneal all Types R and S thermocouples, whether new or previously used, before attempting an accurate calibration. This is usually accomplished by heating the thermocouple electrically in air. The entire thermocouple is supported between two binding posts, which should be close together, so that the tension in the wires and stretching while hot are kept at a minimum. The temperature of the wire is most conveniently determined with an optical pyrometer. The ordinary portable type of optical pyrometer is very satisfactory for this purpose. As commonly used, the magnification is too low for sighting on an object as small as the wires of noble-metal thermocouples, but this is easily remedied by lengthening the telescope tube or using an objective lens of shorter focal length.

67 There are some questions as to the optimum temperature and length of time at which such thermocouples should be annealed to produce the most constant characteristics in later use, and as to whether annealing for more than a few minutes is harmful or beneficial. Most of the mechanical strains are relieved during the first few minutes of heating at 1400 to 1500°C (2552 to 2732°F), but it has been claimed that the changes in the thermal emf of a couple in later use will be smaller if the wires are heated for several hours before calibration and use. The principal objection to annealing thermocouples for a long time at high temperatures, aside from the changes in emf taking place, is that the wires are weakened mechanically as a result of grain growth. It has been found that annealing at temperatures much above 1500°C (2732°F) produces rapid changes in the emf and leaves the wire very weak mechanically. The National Bureau of Standards has adopted the procedure of annealing Types R and S thermocouples for 1 hr at 1450°C (2642°F).

68 It has not been demonstrated conclusively that Types R and S thermocouples after contamination can be materially improved in homogeneity by prolonged heating in air, although it is logical to suppose that certain impurities can be driven off or, through oxidation, rendered less detrimental.

69 Measurement of Emf. One of the factors in the accuracy of the calibration of a thermocouple is the accuracy of the instrument used to measure the emf. Fortunately, in most instances, an instrument is available whose performance is such that the accuracy of the calibration need not be limited by the accuracy of the emf measurements. For work of the highest accuracy it is advisable to use a potentiometer of the type in which there are no slidewires and in which all the settings are made by means of dial switches. However, for most work, in which an

Copyright ASME International
Provided by IHS under license with ASME
No reproduction or networking permitted without license from IHS
Not for Resale

accuracy of 5 μV will suffice, slidewire potentiometers of the laboratory type are sufficiently accurate. Portable potentiometers accurate within 40 to 100μV are also available.

70 Homogeneity. The emf developed by a thermocouple made from homogeneous wires will be a function of the temperature difference between the measuring and the reference junction. If, however, the wires are not homogeneous, and the inhomogeneity is present in a region where a temperature gradient exists, extraneous emf's will be developed, and the output of the thermocouple will depend upon factors in addition to the temperature difference between the two junctions. The homogeneity of the thermocouple wire, therefore, is an important factor in accurate measurements.

71 Thermocouple wire now being produced is usually sufficiently homogeneous in chemical composition for most purposes. Occasionally inhomogeneity in a thermocouple may be traced to the manufacturer, but such cases are rare. More often it is introduced in the wires during tests or use. It usually is not necessary, therefore, to examine new thermocouples for inhomogeneity, but thermocouples that have been used for some time should be so examined before an accurate calibration is attempted.

72 While rather simple methods are available for detecting thermoelectric inhomogeneity, no satisfactory method has been devised for quantitatively determining it or the resulting errors in the measurement of temperatures. Abrupt changes in the thermoelectric power may be detected by connecting the two ends of the wire to a sensitive galvanometer and slowly moving a source of heat, such as a Bunsen burner or small electric furnace, along the wire. This method is not satisfactory for detecting gradual changes in the thermoelectric power along the length of the wire. Inhomogeneity of this nature may be detected by doubling the wire and inserting it to various depths in a uniformly heated furnace, the two ends of the wire being connected to a galvanometer as before. If, for example, the doubled end of the wire is immersed 10 in. in a furnace with a sharp temperature gradient so that two points on the wire 20 in. apart are in the temperature gradient, the emf determined with the galvanometer is a measure of the difference in the thermoelectric properties of the wire at these two points.

73 After reasonable homogeneity of one sample of wire has been established, it may be used in testing the homogeneity of similar wires by welding the two together and inserting the junction into a heated furnace. The resulting emf at various depths of immersion may be measured by any convenient method. Other similar methods have been described for detecting inhomogeneity.

74 Tests such as those described above will indicate the uncertainty in temperature measurements due to inhomogeneity in the wires. For example, if a difference in emf of 10μV is detected along either element of a platinum-rhodium couple by heating various parts of the wire to 600°C (1112°F), measurements made with it are subject to an uncertainty of the order of 1 deg to 500°C, or 2 deg at 1200°C. Similarly, if an emf of 10 μV is detected along an element of a base-metal couple with a source of heat at 100°C, measurements made with it are subject to an uncertainty of the order of 0.2 deg at this temperature. The effects of inhomogeneity in both wires may be either additive or subtractive and, as the emf developed along an inhomogeneous wire depends upon the temperature distribution, it is evident that corrections for inhomogeneity are impracticable if not impossible.

75 General Calibration Methods. The temperature-emf relation of a homogeneous thermocouple is a definite physical property and therefore does not depend upon the details of the apparatus or method employed in determining this relation. Consequently, there are numerous methods of calibrating thermocouples, the choice of which depends upon the type of thermocouple, temperature range, accuracy required, size of wires, apparatus available and personal preference. However, the emf of a thermocouple with its measuring junction at a specified temperature depends upon the temperature difference between its measuring and reference junctions. Therefore, whatever method of calibration is used, the reference junction must be maintained constant at some known temperature and this temperature must be stated as a necessary part of the calibration results.

76 Thermocouple calibrations are required with various degrees of accuracy ranging from 0.1 to 5 or 10 deg C. For an accuracy of 0.1 deg, agreement with the IPTS and methods of interpolating between the calibration points become problems of prime importance, but for an accuracy of about 10 deg com-

Copyright ASME International
Provided by IHS under license with ASME
No reproduction or networking permitted without license from IHS
Not for Resale

paratively simple methods of calibration will usually suffice. The most accurate calibrations in the range −183°C (−297°F) to 300°C (572°F) are made by comparing the couples directly with a standard platinum-resistance thermometer in a stirred liquid bath. In the range 300 to 630.5°C (572 to 1167°F) (and below if a platinum-resistance thermometer and stirred liquid bath is not available) thermocouples are most accurately calibrated at the freezing or boiling points of pure substances. Between 630.5 and 1063°C (1167 and 1945°F), Type S thermocouple calibrated at 630.5°C and the freezing points of gold and silver, serves to define the IPTS, and other types of thermocouples are most accurately calibrated in this range by direct comparison with a standard thermocouple calibrated as specified. Other thermocouples may be calibrated just as accurately at the fixed points as the Type S thermocouple, but interpolated values at intermediate points may depart slightly from the IPTS. Above 1063°C (1945°F), the most basic calibrations are made by observing the emf when one junction of the thermocouple is in a blackbody furnace, the temperature of which is measured with an optical pyrometer. However, the difficulties encountered in bringing a blackbody furnace to a uniform temperature make the direct comparison of these two types of instruments by no means a simple matter.

77 Although the Type S thermocouple serves to define the IPTS only in the range 630.5 to 1063°C, this type of thermocouple calibrated at fixed points is used extensively both above and below this range as a working standard in the calibration of other thermocouples. For most industrial purposes a calibration accurate to 2 or 3 deg C in the range room temperature to 1200°C (2192°F) is sufficient. Other thermocouples can be calibrated by comparison with such working standards almost as accurately as the calibration of the standard is known. However, it might be pointed out that outside the range 630.5 to 1063°C any type of thermocouple suitable for the purpose, and calibrated to agree with the resistance thermometer or optical pyrometer in their respective ranges, has as much claim to yielding temperatures on the IPTS as the Type S thermocouple. In fact, at the lower temperatures certain types of base-metal thermocouples are definitely better adapted for precise measurements.

78 The calibration of thermocouples then may be divided into two general classes, depending upon the method of determining the temperature of the measuring junction, (1) calibration at fixed points and (2) calibration by comparison with standard instruments such as thermocouples, resistance thermometers, etc.

79 In order to obtain the high accuracies referred to above and usually associated with calibrations at fixed points, it is necessary to follow certain prescribed methods and to take the special precautions described in detail in the following paragraphs, but for an accuracy of about 5 deg C the more elaborate apparatus to be described need not be employed.

80 Calibration Uncertainties. The several factors which contribute to the uncertainties in the emf versus temperature relationship for a particular thermocouple as determined by calibration may be

TABLE 9.3 ACCURACIES ATTAINABLE USING FIXED POINT TECHNIQUES

Type	Temp. Range °C	Calibration Points[a]	Calibration Uncertainty	
			At Observed Points, Deg C	Of Interpolated Values, Deg C
S	0-1100	Zn, Sb[b], Ag, Au	0.2	0.3
R	0-1100	Sn, Zn, Al, Cu-Ag, Cu	0.2	0.5
E	0-870	Sn, Zn, Al, Cu-Ag	0.2	0.5
J	0-760	Sn, Zn, Al	0.2	1.0
K	0-1100	Sn, Zn, Al, Cu-Ag, Cu	0.2	1.0

[a] Metal freezing points.

[b] Temperature measured by standard platinum resistance thermometer.

Copyright ASME International
Provided by IHS under license with ASME
No reproduction or networking permitted without license from IHS
Not for Resale

grouped into two kinds; those influencing the observations at calibration points, and those arising from any added uncertainty as a result of interpolation between the calibration points. Errors from either of these sources of uncertainty can be materially reduced, within limits, through use of well designed equipment and careful techniques; hence the required accuracy should be clearly understood when choosing calibration facilities.

81 Estimates of the accuracies attainable in the calibration of homogeneous thermocouples by different techniques are given in Tables 9.3, 9.4, 9.5, 9.6 and 9.7. The estimates assume that reasonable care is exercised in the work. More or less accurate results are possible using the same methods, depending upon soundness of the techniques used. While excessive care is a waste when relatively crude measurements are sufficient, it should be emphasized that inadequate attention to possible sources of error is more often found to be the practice than the converse. In the following some of the important considerations associated with the various calibration methods are briefly emphasized.

TABLE 9.4 ACCURACIES ATTAINABLE USING COMPARISON TECHNIQUES IN LABORATORY FURNACES (TYPE R OR S STANDARD)

Type	Temp. Range °C	Calibration Points	Calibration Uncertainty	
			At Observed Points, Deg C	Of Interpolated Values, Deg C
R or S	0 to 1100	About every 100 deg C	0.3	0.5
E	0 to 870	"	0.5	0.5
J	0 to 760	"	0.5	1.0
K	0 to 1100	"	0.5	1.0

TABLE 9.5 ACCURACIES ATTAINABLE USING COMPARISON TECHNIQUES IN STIRRED LIQUID BATHS

Type	Temp. Range °C	Calibration Points	Type of Standard[a]	Calibration Uncertainty	
				At Observed Points, Deg C	Of Interpolated Values, Deg C
E	−196 to 425	About every 100 deg C	PRT	0.1	0.2
	"	About every 50 deg C	"	"	0.1
	"	"	E or T	0.2	0.2
	−56 to 200	"	LIG	0.1	0.1
T	−196 to 250	About every 100 deg C	PRT	0.1	0.2
	"	50 deg C	"	0.1	0.1
	"	50 deg C	E or T	0.2	0.2
	−56 to 200	50 deg C	LIG	0.1	0.1

[a] PRT = Standard platinum resistance thermometer.
E or T = Type E or T thermocouple.
LIG = Liquid-in-glass thermometer.

Copyright ASME International
Provided by IHS under license with ASME
No reproduction or networking permitted without license from IHS
Not for Resale

TABLE 9.6 TUNGSTEN-RHENIUM TYPE THERMOCOUPLES

(Maximum calibration uncertainties for range 1000 to 2000 C using melting points by wire or disc method)

Calibration Uncertainty			
At Observed Points		Of Interpolated Values[a]	
Gold (1063°C)	±0.5 deg C	1000 to 1453°C	±2.7 deg C
Nickel (1453°C)	±3.5 deg C	1453 to 1552°C	±4.0 deg C
Palladium (1552°C)	±3.0 deg C	1552 to 1769°C	±4.0 deg C
Platinum (1769°C)	±3.0 deg C	1769 to 2000°C	±7.0 deg C
Rhodium (1960°C)	±5.0 deg C		

[a] These values apply only when all five observed points are taken.

TABLE 9.7 ACCURACIES ATTAINABLE USING COMPARISON TECHNIQUES IN SPECIAL FURNACES (OPTICAL PYROMETER STANDARD)

Type	Temperature Range, °C	Calibration Uncertainty	
		At Observed Points Deg C	Of Interpolated Values[a] Deg C
IrRh vs. Ir[b]	1000 to 1300	2	3
"	1300 to 1600	3	4
"	1600 to 2000	5	8
W vs. WRe[c]	1000 to 1300	2	3
"	1300 to 1600	3	4
"	1600 to 2000	5	8
30 vs. 6[d]	1000 to 1550	2	3
	1500 to 1750	3	5

[a] Using difference curve from reference table with calibration points spaced every 200 deg C.
[b] 40Ir60Rh vs. Ir, 50 Ir50Rh vs. Ir, or 60Ir40Rh vs. Ir.
[c] W vs. 74W26Re, 97W3Re vs. 74W26Re, or 95We vs. 74W26Re.
[d] 70Pt30Rh vs. 94Pt6Rh.

Copyright ASME International
Provided by IHS under license with ASME
No reproduction or networking permitted without license from IHS
Not for Resale

TABLE 9.8 SECONDARY REFERENCE POINTS

(The pressure is 1 standard atmosphere, except for the triple point of benzoic acid.)

	°C	°F
Boiling point of helium	−268.935	−452.083
Boiling point of equilibrium hydrogen	−252.883	−423.189
Sublimation point of carbon dioxide	−78.5	−109.3
Freezing point of mercury	−38.86	−37.95
Freezing point of water	0.00	32.00
Triple point of benzoic acid	122.36	252.25
Freezing point of indium	156.61	313.90
Freezing point of tin	231.91	449.44
Freezing point of bismuth	271.37	520.47
Freezing point of cadmium	321.03	609.86
Freezing point of lead	327.43	621.37
Freezing point of antimony	630.5	1166.9
Freezing point of aluminum	660.1	1220.2
Freezing point of copper	1083.0	1981.0
Freezing point of palladium	1552.0	2826.0
Freezing point of platinum	1769.0	3216.0

82 Uncertainties Using Fixed Points. The equilibrium temperatures listed in Table 9.8 (with the possible exception of the sublimation point of carbon dioxide) are sufficiently exact, and the materials are readily available in high enough purity, that accurate work can be done using these fixed points with no significant error being introduced by accepting the temperatures listed. Using freezing points, however, good designs of freezing point cells and furnaces are important for controlling the freezes and for providing sufficient immersion for the thermocouple, if the full potential of the method is to be realized.

83 Although uncertainties of the order of ±1 deg C in the temperatures are assigned to the freezing points (and hence by implication to the melting points) of palladium and platinum, these contribute in only a minor way to the overall uncertainties of calibrations using freezing point techniques.

84 Uncertainties Using Comparison Methods. The accuracy attained at each calibration point using the comparison method will depend upon the degree to which the standard and the test thermocouple are maintained at the same temperature and the accuracy of the standard used. Comparison measurements made in stirred liquid baths usually present no special problems provided that sufficient immersion is used. Because of the high thermal conductivity of copper, special attention should be given to the problem of immersion when calibrating Type T thermocouples.

85 As higher and higher temperatures are used the difficulties of maintaining the test thermocouple and the standard at the same measured temperature are magnified whether a tube furnace, an oven with moderating block, or whatever means is used for maintaining the desired temperature. In addition, at temperatures of about 1500°C (2732°F), and higher, the choice of insulating materials becomes very important. Special attention must be paid to possible errors arising from contamination from the insulators or protection tube and from electrical leakage.

86 When an optical pyrometer is used as the temperature measuring standard, a good blackbody must be used and the design must be such that the test thermocouple is at the same temperature as the blackbody.

87 Freezing Points. The emf developed by a homogeneous thermocouple at the freezing point of a metal is constant and reproducible if all of the

Copyright ASME International
Provided by IHS under license with ASME
No reproduction or networking permitted without license from IHS
Not for Resale

following conditions are fulfilled: (1) the thermocouple is protected from contamination; (2) the thermocouple is immersed in the freezing-point sample sufficiently far to eliminate heating or cooling of the junction by heat flow along the wires and protection tube; (3) the reference junctions are maintained at a constant and reproducible temperature; (4) the freezing-point sample is pure; and (5) the metal is maintained at essentially a uniform temperature during freezing.

88 Techniques for achieving these conditions are well developed. Many of the metals listed in Table 9.8 are available commercially in high purity (ca 99.999 percent or better) and can be used assuming the freezing point temperatures given in the table. It is essential, however, that protection tubes and crucibles be chosen of such material that the pure metals will not be contaminated. Copper and silver must be protected from oxygen contamination, and it is also advisable to protect aluminum and antimony; this is done by using covered crucibles and covering the freezing point metals with powdered graphite. The choice of a suitable furnace is also important. The furnace must provide uniform heating in the region of the freezing point sample, and have adequate controls to bring the sample slowly into its freeze. Complete units consisting of freezing point sample, crucible, and furnace are available commercially. Freezing point standards of tin, lead, zinc, aluminum, and copper may be purchased from the National Bureau of Standards.

89 Melting Points. The emf of a thermocouple at the melting point of a metal may be determined with the same apparatus as that described above for freezing points, but the use of the freeze is usually more satisfactory. Melting points are used to advantage, however, when only a limited amount of material is available or at high temperatures where experimental techniques with freezing points are difficult. To apply this method, a short length of metal whose melting point is known is joined between the end of the two wires of the thermocouple and placed in an electrically heated furnace the temperature of which is slowly raised. When the melting point of the metal is reached, the emf of the thermocouple remains steady for a few minutes and then drops to zero as the fused metal drops away from the junction. With good technique the method can give results with no greater uncertainty than that with which the IPTS is realized above 1063°C by optical pyrometry. This method is not well adapted to metals that oxidize rapidly, and if used with materials whose melting temperature is altered by the oxide, the metal should be melted in a neutral atmosphere.

90 Calibration Using Comparison Methods. The calibration of a thermocouple by comparison with a working standard is sufficiently accurate for most purposes and can be done conveniently in most industrial and technical laboratories. The success of this method usually depends upon the ability of the observer to bring the measuring junction of the thermocouple to the same temperature as the actuating element of the standard, such as the measuring junction of a standard thermocouple or the bulb of a resistance or liquid-in-glass thermometer. The accuracy obtained is further limited by the accuracy of the standard. Of course, the reference junction temperature must be known, but this can be controlled. The method of bringing the measuring junction of the thermocouple to the same temperature as that of the actuating element of the standard depends upon the type of thermocouple, type of standard, and the method of heating.

91 Laboratory Furnaces. The calibration procedure consists of measuring the emf of the thermocouple being calibrated at selected calibration points, the temperature of each point being measured with a working standard. The number and choice of calibration points will depend on the type of thermocouple, the temperature range covered, and the accuracy required.

92 Platinum-Rhodium Versus Platinum Thermocouples. Thermocouples employing platinum and platinum rhodium alloys are seldom used for accurate measurements below 300°C (572°F) because the sensitivity of these thermocouples decreases rapidly at low temperatures.

93 These thermocouples are usually calibrated at temperatures up to 1200°C by comparison with either a Type S or Type R working standard in electrically heated furnaces. Above 1200°C (2192°F) the Type B thermocouple is a preferred working standard because of its greater stability at high temperatures. This thermocouple may be used to 1600°C (2912°F) or higher.

94 One method for the comparison of two such thermocouples is based upon the simultaneous reading of the emf of the standard and the test ther-

Copyright ASME International
Provided by IHS under license with ASME
No reproduction or networking permitted without license from IHS
Not for Resale

mocouple without waiting for the furnace to stabilize at any given temperature. The measuring junctions are maintained always at close to the same temperature by welding them into a common bead or by wrapping them together with platinum wire or ribbon. A separate potentiometer is used to measure each emf, one connected to each thermocouple, and each potentiometer is provided with a reflecting galvanometer. The two spots of light are reflected onto a single scale, the galvanometers being set in such a position that the spots coincide at the zero point on the scale when the circuits are open, and therefore, also when the potentiometers are set to balance the emf of each thermocouple. Simultaneous readings are obtained by setting one potentiometer to a desired value and adjusting the other so that both spots of light pass across the zero of the scale together as the temperature of the furnace is raised or lowered.

95 By making observations first with a rising and then with a falling temperature, the rates of rise and fall being approximately equal, and taking the mean of the results found, several minor errors such as those due to differences in the periods of the galvanometers, etc., are eliminated or greatly reduced.

96 This method is particularly adapted to the calibration of thermocouples at any number of selected points. For example, if it is desired to determine the temperature of a thermocouple corresponding to 10.0 millivolts, this emf is set up on the potentiometer connected to the thermocouple, the emf of the standard thermocouple observed as described above, and the temperature obtained from the emf of the standard. If it is desired to determine the emf of a thermocouple corresponding to 1000°C (1832°F), the emf of the standard corresponding to this temperature is set up on the potentiometer connected to the standard and the emf of the thermocouple being calibrated is observed directly with the second potentiometer. To reduce the time required to calibrate by this method the furnace should be so constructed that it will heat or cool rapidly. Fast response is obtained in one furnace design which employs a nickel-chromium tube as the heating element.

97 A similar furnace using a silicon carbide tube as the heating element can be used to extend the calibration range upward. At temperatures above 1063°C (1945°F) the IPTS is defined in terms of ratios of radiation usually measured with an optical or a photoelectric pyrometer. If the test thermocouple is inserted into the back of a blackbody cavity built into the furnace, a pyrometer may be used directly as the working standard. Alternatively, the Type B thermocouple can be used as the working standard after it has been calibrated against a pyrometer.

98 The thermocouples are insulated and protected by suitable ceramic tubes. It is essential that good insulation be maintained between the two potentiometers and thermocouple circuits except at the point where the junctions are welded together. The reference junctions are maintained at a known temperature.

99 Variations of the two potentiometer method may be used to automate the calibration process when the thermocouple being calibrated and the standard thermocouple are of the same type. If the emf of the standard is read with one potentiometer and the emf difference between the standard and the unknown are read with the second potentiometer the calibration data may be recorded automatically.

100 If two potentiometers are not available for taking simultaneous readings, the furnace may be brought to essentially a constant temperature and the emf of each thermocouple read alternately on one instrument.

101 When the thermocouples are calibrated by welding or wrapping the junctions together, both would be expected to be close to the same temperature even when the temperature of the furnace is changing. If it is necessary or advisable to calibrate the thermocouples without removing them from the protection tubes, then the junctions of the thermocouple being tested and that of the standard should be brought as close together as possible in a uniformly heated portion of the furnace. In this case it is necessary that the furnace be brought to approximately a constant temperature before taking observations.

102 There are a number of other methods of heating and of bringing the junctions to approximately the same temperature, for example, inserting the thermocouples properly protected into a bath of molten metal or into holes drilled in a large metal block. The block of metal may be heated in a muffle furnace or, if made of a good thermal conductor such as copper, may be heated electrically. Tin, which has a low melting point, 232°C (450°F), and low

Copyright ASME International
Provided by IHS under license with ASME
No reproduction or networking permitted without license from IHS
Not for Resale

volatility, makes a satisfactory bath material. The thermocouples should be immersed to the same depth with the junctions close together. Ceramic tubes are sufficient protection, but to avoid breakage by thermal shock when immersed in molten metal it is preferable to place them inside of secondary tubes of iron, nickel-chromium, graphite, or similar material. In all of these methods, particularly in those cases in which the junctions of the thermocouples are not brought into direct contact, it is important that the depth of immersion be sufficient to eliminate cooling or heating of the junctions by heat flow along the thermocouple and the insulating and protecting tubes. This can be determined by observing the change in the emf of the thermocouple as the depth of immersion is changed slightly. If proper precautions are taken, the accuracy yielded by any method of heating or bringing the junctions to the same temperature may be as great as that obtained by any other method.

103 Base-Metal Thermocouples. The methods of testing base-metal thermocouples above room temperature are generally the same as those just described for testing noble-metal thermocouples with the exception, in some cases, of the methods of bringing the junctions of the standard and the thermocouple being tested to the same temperature and the methods of protecting platinum-rhodium standards from contamination. One arrangement of bringing the junction of a platinum-rhodium standard to the same temperature as that of a large base-metal thermocouple for accurate calibration is to insert the junction of the standard into a small hole (about 0.06 in. in diameter) drilled in the hot junction of the base-metal thermocouple. The platinum-rhodium standard is protected by ceramic tubes to within a few hundredths of an inch of the hot junction, and the end of the ceramic tube is sealed to the thermocouple by Pyrex glass or by a small amount of kaolin and water-glass cement. This prevents contamination of the standard thermocouple, with the exception of the small length of about 0.1 in., which is necessarily in contact with the base-metal thermocouple. If the furnace is uniformly heated in this region (and it is of little value to make such a test unless it is) contamination at this point will not cause any error. If the wire of the standard becomes brittle at the junction, this part of the wire may be cut off and enough wire drawn through the softened seal to form a new junction. The seal should be examined after each test and remade if it does not appear to be good. More than one base-metal thermocouple may be welded together and the hole drilled in the composite junction. The thermocouple should be clamped in place so that the junctions remain in contact. If two potentiometers are used for taking simultaneous readings, the temperature of the furnace may be changing as much as a few degrees per minute during an observation, but if a single instrument is used for measuring the emf, the furnace temperature should be maintained practically constant during observations. When wires, insulators, and protection tubes are large, tests should be made to insure that the depth of immersion is sufficient.

104 Stirred Liquid Baths. At temperatures below 620°C (1148°F) stirred liquid baths provide an efficient medium for bringing a thermocouple and a temperature standard to the same temperature.

105 Water, petroleum oils, or other organic liquids, depending upon temperature range, are commonly used bath media. Molten salts or liquid tin are used at temperatures higher than are suitable for oil. Base-metal thermocouples, either bare wire or insulated, may be accurately calibrated in such baths. Usually no special preparation of the thermocouple will be required other than to insert it to the bottom of a protection tube for immersion in the liquid bath. Borosilicate glass tubing, such as Pyrex glass, is convient for use up to 538°C (1000°F). Vitreous silica or ceramic tubing may be used to 620°C (1148°F). The tube should be closed at the immersed end and of an internal diameter such as to permit easy insertion of the thermocouple or thermocouples to be calibrated, but no longer than necessary. Unfavorable heat transfer conditions in an unnecessarily large diameter tube will require a greater depth of immersion in the bath than would a close fitting tube. If a bare wire thermocouple is being calibrated, the wires must be provided with electrical insulation over the length inserted in the protection tube. Sheathed thermocouples may be immersed directly in the bath liquid in cases where the sheath material will not be attacked by the liquid. Salt baths for use at high temperature must be provided with suitable wells into which the thermocouple protection tubes and standard thermometers may be inserted for protection from the molten salt.

106 The standard thermometer may be a thermocouple standard inserted in the protection tube with

Copyright ASME International
Provided by IHS under license with ASME
No reproduction or networking permitted without license from IHS
Not for Resale

the thermocouple being calibrated, or it may be a liquid-in-glass thermometer or resistance thermometer immersed in the bath close to the thermocouple protection tube. The choice of a standard thermometer will be governed principally by the degree of uncertainty which can be tolerated.

107 Fixed Installations. After thermocouples have been used for some time at high temperatures, it is difficult if not impossible, to determine how much the calibrations are in error by removing them from an installation and testing in a laboratory furnace. The thermocouples are usually heterogeneous after such use and in such a condition that the emf developed by the thermocouples depends upon the temperature distribution along the wires. If possible, such a thermocouple should be tested under the same conditions and in the same installation in which it is used. Although it is not usually possible to obtain as high a precision by testing the thermocouple in place as is obtained in laboratory tests, the result is far more useful in the sense of being representative of the behavior of the thermocouple. The calibration is accomplished by comparing the thermocouple with a thermocouple standard.

108 In this case, as in the calibration of any thermocouple by comparison methods, the main objective is to bring the hot junction to the same temperature as that of the thermocouple being tested. One method is to drill a hole in the furnace, flue, etc., at the side of each thermocouple permanently installed, large enough to permit insertion of the checking thermocouples. The hole is kept plugged, except when tests are being made. The standard thermocouple is inserted through this hole to the same depth as the thermocouple being tested with the hot junction ends of the protection tubes as close together as possible. Preferably a potentiometer should be used with the standard thermocouple.

109 In many installations the base-metal thermocouple and protecting tube are mounted inside another protecting tube of iron, fire clay, carborundum, or some other refractory which is permanently cemented or fastened into the furnace wall. Frequently there is room to insert a small test thermocouple in this outer tube alongside of the fixed thermocouple. A third method, much less satisfactory, is to wait until the furnace, flue, etc., have reached a constant temperature and make observations with the thermocouple being tested, then remove this thermocouple and insert the standard thermocouple to the same depth.

110 If desired, comparisons can be made, preferably by either of the first or second methods at several temperatures, and a curve obtained for each permanently installed thermocouple showing the necessary corrections to be applied to its readings. Although testing a thermocouple at one temperature yields some information, it is not safe to assume that the changes in the emf of the thermocouple are proportional to the temperature or to the emf. For example, it has been observed that a thermocouple which had changed in use by the equivalent of 9 deg C at 315°C (16 deg F at 599°F) had changed only the equivalent of 6 deg C at 1100°C (11 deg F at 2012°F).

111 It may be thought that the method of checking thermocouples under working conditions is unsatisfactory because, in most furnaces used in industrial processes, large temperature gradients exist and there is no certainty that the standard thermocouple is at the same temperature as the thermocouple being tested. This objection, however, is not serious, because if temperature gradients do exist of such a magnitude as to cause much difference in temperature between two similarly mounted thermocouples located close together, the reading of the standard thermocouple represents the temperature of the fixed thermocouple as closely as the temperature of the latter represents that of the furnace.

112 Another advantage of checking thermocouples in the same installation in which they are used is that the thermocouple, extension wires, and indicator are tested as a unit and under the conditions of use.

113 Interpolation Methods. An experimental thermocouple calibration consists of a series of voltage measurements determined at a finite number of known temperatures. If a test thermocouple were compared with a standard temperature instrument at 100 temperatures within a 10 deg F range, there would be little need for interpolation between the calibration points. However, if from 4 to 10 calibration points are all that can be afforded in a given range of interest, then what is needed to characterize an individual thermocouple is a continuous relation, by means of which temperatures can be approximated

Copyright ASME International
Provided by IHS under license with ASME
No reproduction or networking permitted without license from IHS
Not for Resale

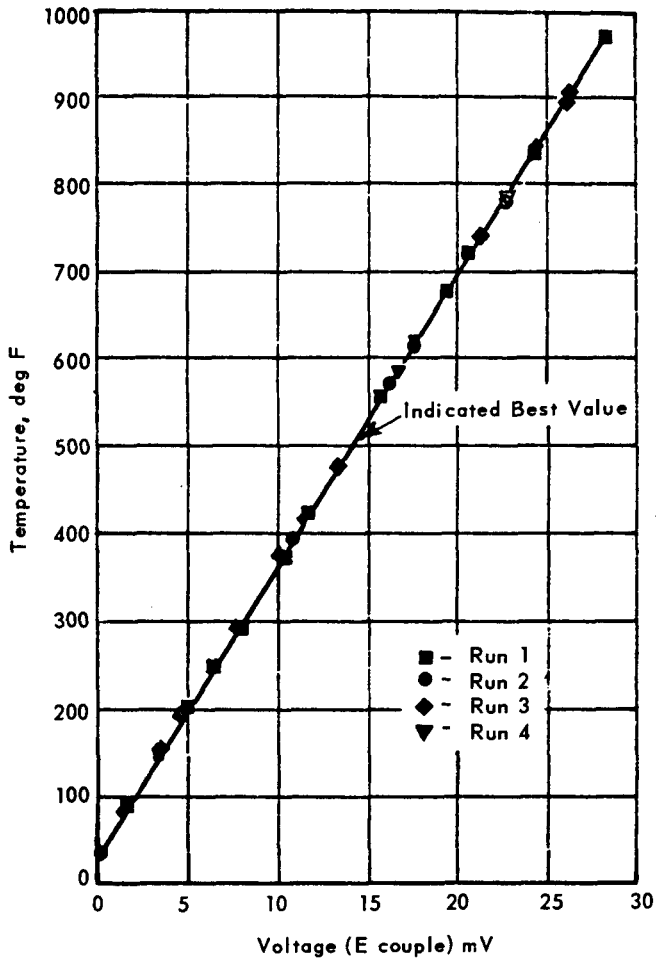

FIG. 9.11 TEMPERATURE EMF PLOT OF RAW CALIBRATION DATA FOR AN IRON-CONSTANTAN THERMOCOUPLE

with a minimum uncertainity from voltage measurements at intermediate levels. Efforts to obtain such a continuous relation appear thwarted from the start because of the small number of discrete calibration points available. However, interpolation between the calibration points is possible since the emf changes only slowly and smoothly with temperature.

114 One can present raw calibration data directly in terms of temperature T and voltage E_{couple}, on a scale so chosen that the information appears well represented by a single curve (see Fig. 9.11) or by a simple mathematical equation. For example, for the highest accuracy in the range 630.5 to 1063.0°C with the Type S thermocouple, the method is that prescribed in the NBS Circular No. 590. An equation of the form $e = a + bt + ct^2$, is used where a, b, and c are constants determined by calibration at the freezing points of gold, silver, and antimony. By calibrating the thermocouple also at the freezing point of zinc and using an equation of the form $c = a + bt + ct^2 + dt^3$, the temperature range can be extended down to 400°C without introducing an uncertainty of more than 0.1 deg C in the range 630.5 to 1063.0°C. By calibrating the thermocouple at freezing points of gold, antimony, and zinc and using an equation of the form $e = a + bt + ct^2$, a calibration is obtained for the range 400 to 1100°C, which agrees with IPTS to 0.5 deg C. However, in general, this practice of directly representing thermocouple characteristics does not yield results within the required limits of uncertainty.

115 A better method is based on the use of differences between observed values and values obtained from standard reference tables. Such reference tables are presented in ASTM Standard E230-72, Temperature-Electromotive Force (EMF)

Copyright ASME International
Provided by IHS under license with ASME
No reproduction or networking permitted without license from IHS
Not for Resale

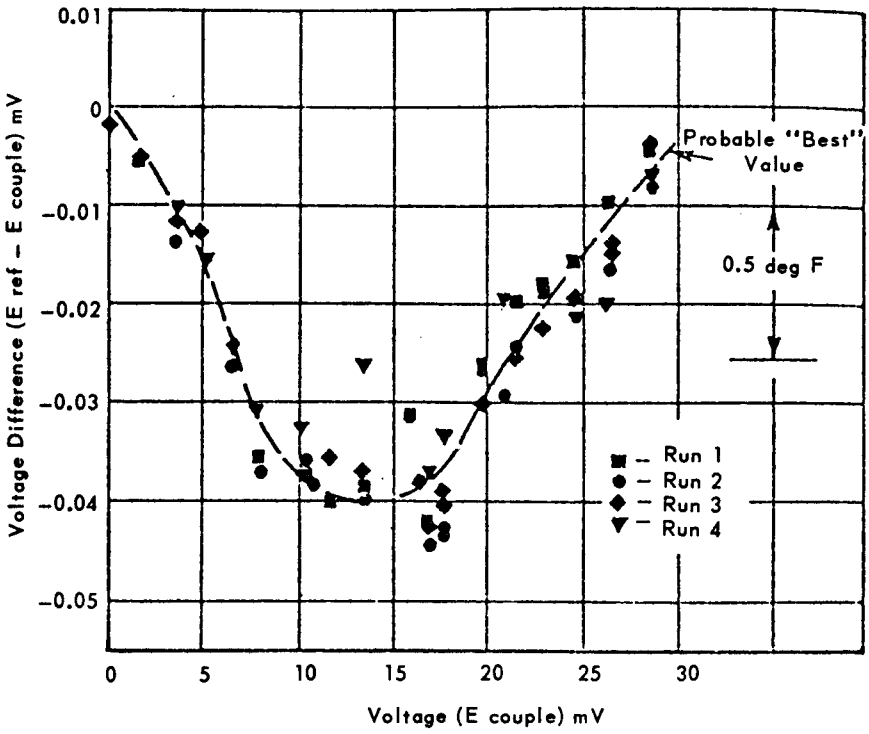

FIG. 9.12 DIFFERENCE PLOT OF RAW CALIBRATION DATA FOR AN IRON-CONSTANTAN THERMOCOUPLE

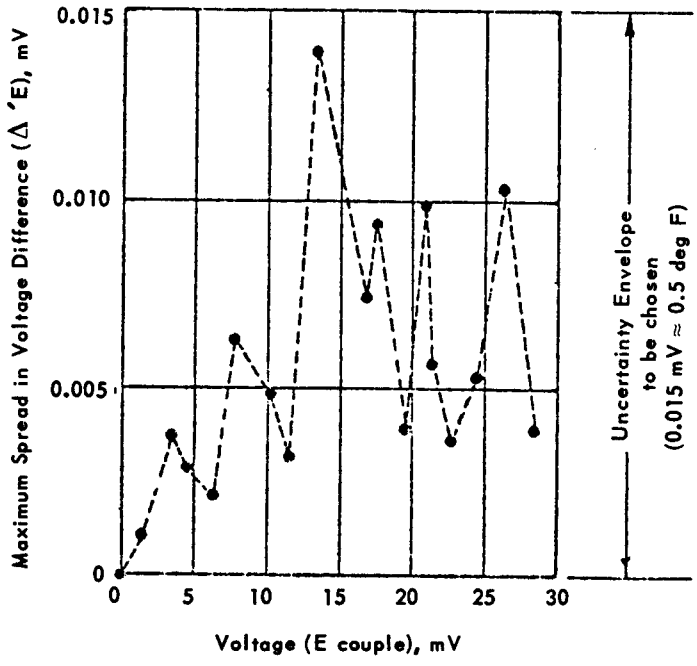

FIG. 19.13 TYPICAL DETERMINATION OF UNCERTAINTY ENVELOPE (FROM DATA OF FIG. 9.12)

Copyright ASME International
Provided by IHS under license with ASME
No reproduction or networking permitted without license from IHS
Not for Resale

Tables for Thermocouples. The data of Fig. 9.11 are replotted in Fig. 9.12 in terms of differences from the proper reference table. The maximum spread between points taken at the same level (replication), but obtained in random order with respect to time and level (randomization) is taken as the uncertainty envelope. This information, taken from Fig. 9.12 is plotted in Fig. 9.13, and constitutes a vital bit of information about the particular thermocouple and the calibration system. In lieu of an experimental determination of the uncertainty, one must rely on judgment or on the current literature for this information.

116 Usually, only a single set of calibration points is available. Typical points would be those taken from one run shown in Fig. 9.11 or 9.12 and these are shown in Fig. 9.14 together with four of the many possible methods for representing the thermocouple difference characteristic. Although at first it appears that the most probable relation characterizing a given thermocouple is sensibly indeterminate from a single set of calibration points, it is an important fact that all experimental points must be contained within the uncertainty interval when the uncertainty interval is centered on the most probable interpolation equation.

117 Making use of this principle, together with the fact that overall experimental uncertainties are minimized by use of the least squares technique, one starts the search for the most probable interpolation equation by passing a least squares equation of the first degree through the experimental data. A check is then made to ascertain whether all experimental points are contained within the uncertainty envelope which is centered on the linear interpolation equation (see Fig. 9.15). One proceeds, according to the results of the foregoing check, to the next highest degree equation, stopping at the lowest degree least squares equation which satisfies the uncertainty requirements. For the example given here, a third degree interpolation equation is required (see Fig. 9.16). By obtaining voltage differences from the least squares fit of any set of calibration points, the uncertainty in the thermocouple difference characteristic will be within one-half the uncertainty interval. Generally, the form of the uncertainty envelope and the degree of the most probable least squares interpolation equation are strongly dependent on the amount of calibration data available and on the temperature range under consideration. It is recommended that the number of distinct calibration points available should be at least 2 (degree + 1). The factor 2 is arrived at from numerical analysis reasoning. A distinct calibration point is defined arbitrarily as one which is separated, temperature-wise, from all other points in the set by as much as one-tenth the

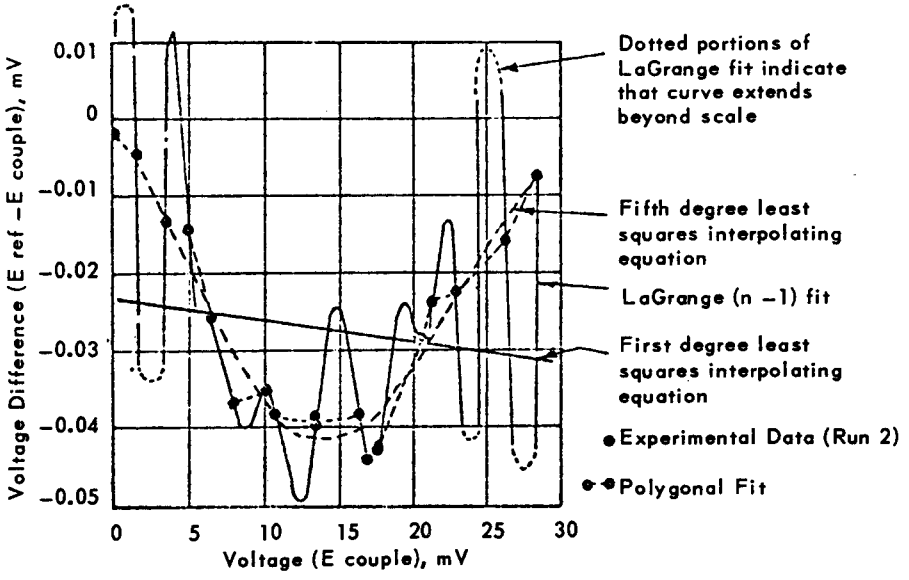

FIG. 9.14 VARIOUS POSSIBLE EMPIRICAL REPRESENTATIONS OF THE THERMOCOUPLE CHARACTERISTIC BASED ON A SINGLE CALIBRATION RUN

Copyright ASME International
Provided by IHS under license with ASME
No reproduction or networking permitted without license from IHS
Not for Resale

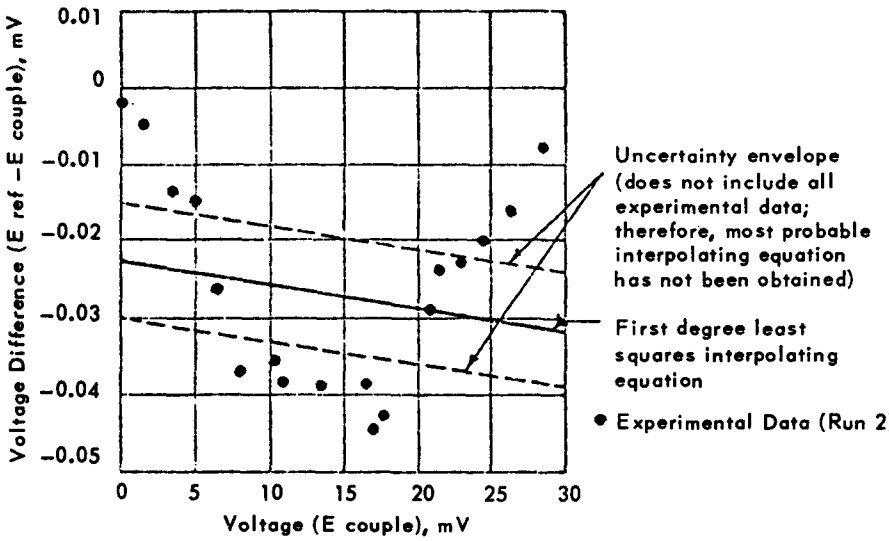

FIG. 9.15 UNCERTAINTY ENVELOPE METHOD FOR DETERMINING DEGREE OF LEAST SQUARES INTERPOLATING EQUATION FOR A SINGLE CALIBRATION RUN (LINEAR)

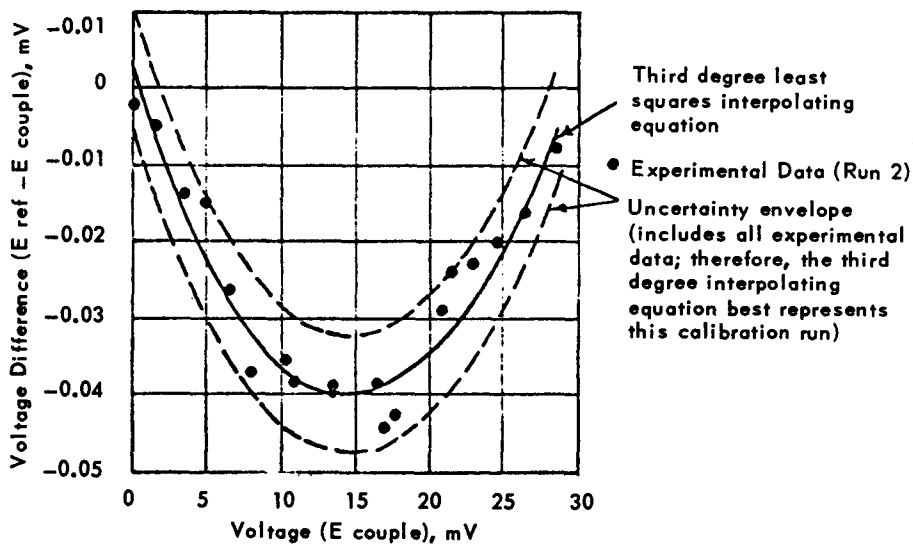

FIG. 9.16 UNCERTAINTY ENVELOPE METHOD FOR DETERMINING DEGREE OF LEAST SQUARES INTERPOLATING EQUATION FOR A SINGLE CALIBRATION RUN (CUBIC)

Copyright ASME International
Provided by IHS under license with ASME
No reproduction or networking permitted without license from IHS
Not for Resale

difference in temperature between the maximum and minimum temperatures of the particular run. The choice of one-tenth presupposes a maximum practical degree of four for the least squares interpolation equation, in keeping with the low degree requirement of numerical analysis. Indeed, if the data cannot be represented by a fourth degree interpolation equation, one should increase the uncertainty interval and start the fitting procedure again.

118 Thus, in general, by using the proper reference table in conjunction with a difference curve, greater precision in temperature determination by means of thermocouples can be obtained from a given number of calibration points than from the use of the calibration data alone.

Reference-Junction Corrections

119 It is not always possible to maintain the reference junctions (commonly called cold junctions) at a desired temperature during the calibration of a thermocouple, but if the temperature of the reference junctions is measured it is possible to apply corrections to the observed emf which will yield a calibration with the desired reference-junction temperature. If the emf of the couple is measured with the reference junctions at temperature t, and a calibration is desired with these junctions at temperature t_o, the measured emf may be corrected for a reference-junction temperature of t_o by adding to the observed value the emf which the couple would give if the reference junctions were at t_o and the measuring junction at t. For example, suppose the observed emf of a platinum-10 percent rhodium thermocouple is 9.427 mV when the measuring junction is at 1832°F and the reference junction is at 77°F, and it is desired to develop the emf value of the couple when the measuring junction is at 1832°F and the reference junctions are at 32°F. Because the emf of the couple is 0.143 mV when the measuring junction is at 77°F and the reference junctions are at 32°F, the desired value is the sum of 9.427 and 0.143, or 9.670 mV.

120 The sign of the corrections must be considered when applying these corrections. For example, suppose the observed emf of the couple with the measuring junction at 1832 °F and the reference junctions at 32°F is 9.570 mV and the emf of the couple with the measuring junction at 1832°F and the cold junctions at 77°F is required. The emf of the couple when the reference junction is at 77°F and the measuring junction at 32°F is −0.143 mV, and when this is added to the observed emf the desired value 9.427 mV is obtained. Whether the reference-junction correction is positive or negative should not cause any confusion if it is remembered that the emf of the couple is lowered by bringing the junction temperatures closer together and increased by making the difference greater.

TABLE 9.10 AVERAGE TEMPERATURE-EMF RELATIONS FOR THERMOCOUPLES FOR APPLYING REFERENCE-JUNCTION CORRECTIONS

Temperature	Electromotive Force			
	Platinum-Rhodium* Platinum Versus	Chromel-Alumel	Iron-Constantan	Copper-Constantan
°F	mV	mV	mV	mV
−4	−0.103	−0.77	−1.00	−0.75
+5	−0.079	−0.58	−0.75	−0.57
14	−0.054	−0.39	−0.50	−0.38
23	−0.027	−0.19	−0.25	−0.19
32	0.000	0.00	0.00	0.00
41	+0.028	+0.20	+0.25	+0.19
50	0.056	0.40	0.50	0.39
59	0.084	0.60	0.76	0.59
68	0.113	0.08	1.02	0.79
77	0.143	1.00	1.28	0.99
86	0.173	1.20	1.54	1.19
95	0.204	1.40	1.80	1.40
104	0.235	1.61	2.06	1.61
113	0.266	1.81	2.32	1.82
122	0.299	2.02	2.58	2.03

* The values in this column apply for either the 10 or 13 percent rhodium thermocouples. The difference between the average temperature-emf relationships in this range does not exceed 2μV.

121 In the calibration of couples the temperature-emf relation is not always accurately determined in the range of reference-junction temperatures, in which case the average temperature-emf relation of the type of couple may be used. The average relations for the various types of couples are specified in Table 9.10. The errors caused by using these average relations instead of the actual relation for a particular couple are, in general, less than 2 deg F.

Copyright ASME International
Provided by IHS under license with ASME
No reproduction or networking permitted without license from IHS
Not for Resale

122 If the thermocouple is very short, resulting in the reference junctions being near the furnace and subject to considerable variations or uncertainty in temperature, it is usually more convenient to use thermocouple leads to transfer the reference junctions to a region of more constant and lower temperature than to measure the temperature of the reference junctions near the furnace. The thermocouple leads of base-metal couples are usually made of the same materials as the thermocouple wires, but in the case of platinum-rhodium versus platinum couples a copper thermocouple lead is connected to the platinum-rhodium wire and a copper-nickel thermocouple lead to the platinum wire. Thermocouple leads, for any of the couples discussed here, are available from all of the pyrometer instrument manufacturers. Although the temperature-emf relation of the copper versus copper-nickel thermocouple lead wire is practically the same as that of platinum-rhodium versus platinum couples, the individual thermocouple lead wires are not identical thermoelectrically with the couple wires to which they are attached. Therefore, the two junctions where the leads are attached to the couple should be kept at nearly the same temperature. This is not necessary in the case of base-metal couples when each thermocouple lead and couple wire to which it is attached are of the same material. (The thermocouple leads are then referred to as thermocouple extension wires.)

Calibration of Thermocouple Materials

123 Thermocouples are ordinarily made up to develop a specified emf at one or more temperatures, and in order to select and match materials to do this, a convenient method of testing each element is required. One method of accomplishing this is to determine the thermal emf of the various materials against some stable and reproducible material. At low temperatures copper is sometimes used for this purpose, but platinum appears to be the most satisfactory because it can be used at any temperature up to its melting point, can be freed from all traces of impurities, and can be readily annealed in air. Two samples of platinum, both of which are spectro-chemically pure, may differ slightly in thermal emf, but the same is true of any other metal. To avoid the ambiguity that might arise from this fact, the thermal emf of thermocouple materials tested at the National Bureau of Standards (since 1922) is referred to an arbitrary piece of platinum designated as standard Pt 27. This standard is spectrochemically pure, has been thoroughly annealed, and although it may not be the purest platinum that has been prepared, it serves as a satisfactory standard to which the thermal emf of other materials may be referred to. However, nothing prevents any other laboratory from setting up a laboratory standard for their own use. In order that the various laboratories and manufacturers may specify and express values of thermal emf on a common basis, a common and ultimate standard is necessary.

124 Platinum is used as a working standard for testing thermocouple materials in some laboratories. It is generally more convenient to use a working standard of the same material as that being tested. In any case, the thermal emf of a material against the standard Pt 27 is the algebraic sum of the emf of the material against the working standard and the emf of the working standard against the standard Pt 27 (the law of intermediate metals). When platinum is used as a working standard in testing some other material, the thermal emf measured is large. To obtain the thermal emf of the material against the standard Pt 27, the relatively small emf of the platinum working standard against the standard Pt 27 is added to the large measured emf. When the working standard is of the same kind of material as that being tested, the thermal emf measured is small. To obtain the thermal emf of the material against the standard Pt 27 in this case, the relatively large emf of the working standard against the standard Pt 27 is added to the small measured emf.

125 Except in the case of constantan, two samples of a similar material which will develop more than 0.25 μV/deg F against one another are exceptional. In most cases the value is less than 0.1 μV/deg F. Even in the case of constantan, the thermal emf between two extreme samples does not exceed 1.5 μV/deg F. Therefore, in determining the difference between two samples of a similar material, it is not necessary to measure the temperature accurately.

126 The average thermal emf/deg F of platinum against other thermocouple materials is specified in Table 9.11. It is seen that in measuring the thermal emf of these materials directly against platinum working standards, it is necessary to measure an emf which changes by a large amount for a small change in temperature. An accurate measurement of the emf corresponding to a given temperature, therefore, requires an accurate measurement of the tem-

Copyright ASME International
Provided by IHS under license with ASME
No reproduction or networking permitted without license from IHS
Not for Resale

TABLE 9.11 AVERAGE THERMAL* EMF/DEG F OF PLATINUM AGAINST OTHER THERMOCOUPLE MATERIALS

Material	Temperature, °F	Average Change in Thermal Emf With Temperature, μV/Deg F
Platinum-10 percent rhodium	1832	6.4
Platinum-13 percent rhodium	1832	7.3
Chromel	1652	17.5
Alumel	1652	4.8
Iron	1112	6.4
Constantan	1112	26.0
Constantan	212	20.8
Copper	212	5.2

* Complete tables giving the average thermal emf of platinum-10 percent rhodium, and platinum-13 percent rhodium against platinum are given in NBS Circular 561. The average thermal emf of chromel and of alumel against platinum are given in NBS Research Paper 767, copper and constantan against platinum in NBS Research Paper RP 1080, of iron and constantan against platinum in NBS Research Paper 2415.

perature of the junctions. The necessity for this accurate measurement of temperature, however, is avoided when the measurements are made by using a working standard of material similar to that being tested, since in this case the emf developed is small and changes very little even for large changes in temperature. In the latter method, the accurate measurement of temperature is not entirely avoided, but merely shifted to the laboratory that determines the thermal emf of the working standards against the standard Pt 27.

127 The small thermal emf of a platinum working standard against the standard Pt 27 at any temperature can be determined as accurately as the emf can be measured. These standards are subject to change during use but, if properly used and occasionally checked, can be relied upon to about 2 μV at 1832°F. The thermal emf of working standards of other materials is determined and certified at the National Bureau of Standards to the equivalent of ±2 deg F at high temperatures.

128 In any event the testing of a thermocouple material is essentially the determination of the emf of a thermocouple in which the material being tested is one element and a working standard the other. Some of the precautions that must be observed to obtain accurate results are discussed in the following paragraphs.

129 Platinum. The thermal emf of thermocouple platinum against the standard Pt 27 is usually less than 20 μV at 2192°F and in testing one sample of platinum against another it is not necessary to measure the temperature of the hot junction to closer than 90°F to obtain a comparison accurate to 1 μV. The reference-junction temperature need not be accurately controlled. The platinum standard (i.e., the wire previously compared with the standard Pt 27) is welded to the wire being tested to form a couple and the emf measured at one or more temperatures by any of the methods described for calibrating platinum-rhodium thermocouples. The wires should be carefully insulated and protected. Measurements at two temperatures, about 1112 and 2192°F, are sufficient to develop the emf at any temperature as the emf is small and practically proportional to the temperature.

130 In many laboratories the platinum standard and the platinum element of the couple used to measure the temperature are one and the same. The sample or wire being tested is then welded to the junction of the couple and the emf of the couple and that between the two platinum wires are measured simultaneously with two potentiometers or alternately with one instrument. Simultaneous readings of these electromotive forces should not be made with a millivoltmeter or with a current flowing in either circuit, because one wire is common to both circuits and in this case the potential difference measured by one instrument is influenced by the current flowing in the other circuit. However, this objection is not encountered in the method described above in which the platinum standard is not the same wire as the platinum of the thermocouple.

131 Platinum-Rhodium Alloy. The testing of platinum-rhodium thermocouple wire directly against platinum is exactly the same as the calibration of platinum-rhodium thermocouples. Platinum against platinum-10 percent rhodium develops 6.5 μV/deg F and platinum against platinum-13 percent rhodium develops about 7.3 μV/deg F at 1832°F. Therefore, in order to determine the thermal emf of a sample of platinum-rhodium against platinum to ±20 μV, it is necessary to measure the temperature to ±2.7 deg F. Such an accuracy in temperature measurements is obtained only with a very homogeneous and ac-

Copyright ASME International
Provided by IHS under license with ASME
No reproduction or networking permitted without license from IHS
Not for Resale

curately calibrated couple in a uniformly heated furnace, but if the emf of one sample of wire is known with this accuracy, it may be used to determine the emf of other samples without the necessity of accurately measuring the temperature. For example, the thermal emf per degree of any sample of platinum-10 percent rhodium against any other sample rarely exceeds 0.03 μV/deg F (50μV at 1832°F). Therefore, if the thermal emf of one sample against platinum is known to ±20μV at 1832°F, the emf of other samples against the same platinum can be determined to about the same accuracy by comparing the samples of platinum-rhodium and measuring the temperature of the hot junction to 18 or 36 deg F. The same applies for platinum-13 percent rhodium.

132 The working standard used to determine the thermal emf of the platinum-rhodium may be a sample of platinum, of platinum-rhodium, or either element of the thermocouple used in measuring the temperature. Platinum-10 percent rhodium against platinum-13 percent rhodium develops about 0.89 μV/deg F at 1832°F so that if the thermal emf of one of these materials against platinum is known to ±20 μV at 1832°F, the thermal emf of the other against the same platinum can be determined to ±30 μV by comparing the two and measuring the temperature to ±11 deg F.

133 A number of wires can be welded together and tested by any of these methods.

134 Base-Metal Thermocouple Materials

(*a*) *At High Temperatures.* In testing base-metal thermocouple materials (alumel, chromel, constantan, copper, and iron) the procedure is very much the same as in calibrating base-metal thermocouples. Although such thermal-emf measurements are ultimately referred to platinum, it is not necessary to measure each sample directly against platinum. When the measurements are made against platinum (and this must frequently be done), the platinum wire should be sealed through the end of a glazed porcelain protecting tube with pyrex glass, leaving about 1 cm of the wire exposed for welding to the base-metal wire or wires. The largest uncertainty in the measurements arises from the uncertainty in the determination of the temperature of the junction. The junction of a standard platinum-rhodium thermocouple may be inserted into a hole drilled in the junction formed by welding the material to platinum. This brings the junctions to the same temperature.

In the use of platinum or platinum-rhodium for testing thermocouple materials, the wires are used a large number of times before checking or scrapping. Base-metal thermocouple wires used for testing similar materials should not be used more than once if the highest accuracy is required, because there is a slight change in these materials when heated to a high temperature and if they are used repeatedly, the wires become heterogeneous. The procedure then is to select a coil of wire and test if for homogeneity by taking several samples from different parts of the coil, welding them all together, and measuring the emf between the various samples. If the coil is sufficiently homogeneous as found from such tests, one or more samples may be taken from it and the thermal emf determined as accurately as necessary by comparison with a standard, the emf of which is known, against the standard Pt 27. The average value for the thermal emf of the few selected samples from the coil against the standard Pt 27 will apply for the remainder of the coil with sufficient accuracy for most purposes. Any sample from this coil may then be used as a working standard for testing similar materials. The accuracy with which the temperature must be measured depends upon the difference between the standard and the material being tested. In case of some materials that have been well standardized, the differences are small enough that an accuracy of 90 deg F is sufficient. Seldom, if ever, should it be necessary to measure the temperature closer than 18 deg F.

(*b*) *At Low Temperatures.* Annealed electrolytic copper is very uniform in its thermoelectric properties and is often used as a standard for thermoelectric testing at temperatures below 572°F. The thermal emf of other materials against either copper or platinum may be determined very accurately by using a stirred liquid bath or fixed points. The steam point is an excellent one for this purpose.

Table 9.12 specifies the thermal emf of annealed electrolytic copper against National Bureau of Standards standard Pt 27 and may be used to convert values of the thermal emf of any material against one of these standard materials

Copyright ASME International
Provided by IHS under license with ASME
No reproduction or networking permitted without license from IHS
Not for Resale

TABLE 9.12 THERMAL EMF OF ANNEALED ELECTROLYTIC COPPER AGAINST NBS PLATINUM STANDARD PT 27

Temperature, °F	Emf, μV	Temperature, °F	Emf, μV
−328	−194	212	766
−238	−354	302	1265
−148	−367	392	1831
−58	−242	482	2459
32	0	572	3145
+122	+340	662	3885

to values of emf of the same material against the other standard material.

135 Reference-Junction Corrections. It is not convenient for everyone to obtain the same reference-junction temperature in determining the emf of various thermocouple materials against platinum and, therefore, corrections must be applied to arrive at values for a common reference junction temperature. The method of applying these corrections is the same as that discussed under the testing of thermocouples. The average temperature-emf relations for the various thermocouple materials against platinum are specified in Table 9.13 and may be used for making reference-junction corrections.

136 In comparing two samples of a similar thermocouple material at high temperatures, it is not necessary to measure or control accurately the temperature of the reference junctions. The emf developed by two samples of platinum-rhodium, even the 10 against the 13 percent rhodium alloy, is practically independent of the temperature of the reference junctions between −4 and +122°F. In all other

TABLE 9.13 AVERAGE TEMPERATURE-EMF RELATIONSHIPS OF VARIOUS THERMOCOUPLE MATERIALS AGAINST PLATINUM FOR APPLYING REFERENCE-JUNCTION CORRECTIONS

Temperature, °F	Electromotive Force					
	Platinum Versus Platinum-Rhodium*	Chromel Versus Platinum	Alumel Versus Platinum	Constanton Versus Platinum	Iron Versus Platinum	Copper Versus Platinum
	mV	mV	mV	mV	mV	mV
−4	−0.103	−0.50	0.27	0.64	−0.36	−0.109
+5	−0.079	−0.38	0.20	0.48	−0.27	−0.084
14	−0.054	−0.25	0.14	0.32	−0.18	−0.057
23	−0.027	−0.13	0.07	0.16	−0.09	−0.029
32	0.000	0.00	0.00	0.00	0.00	0.000
41	+0.028	+0.13	−0.07	−0.16	+0.09	+0.030
50	0.056	0.26	−0.14	−0.33	0.18	0.060
59	0.084	0.40	−0.20	−0.49	0.27	0.091
68	0.113	0.52	−0.28	−0.66	0.36	0.124
77	0.143	0.66	−0.34	−0.83	0.45	0.158
86	0.173	0.79	−0.41	−1.00	0.54	0.193
95	0.204	0.93	−0.47	−1.17	0.63	0.229
104	0.235	1.07	−0.54	−1.34	0.72	0.265
113	0.266	1.21	−0.60	−1.51	0.81	0.302
122	0.299	1.35	−0.67	−1.69	0.90	0.340

* These values apply for either 10 or 13 percent rhodium.

Copyright ASME International
Provided by IHS under license with ASME
No reproduction or networking permitted without license from IHS
Not for Resale

Copyright ASME International
Provided by IHS under license with ASME
No reproduction or networking permitted without license from IHS

TABLE 9.14 SUMMARY OF METHODS AND ACCURACIES OBTAINABLE IN CALIBRATING THERMOCOUPLES

Type of Thermocouple	Methods of Calibration	Temperature Range, °F	Calibration Points	Accuracy at Observed Points, Deg F	Method of Interpolating	Uncertainty in Interpolated Values
Type S Platinum-10 percent rhodium versus platinum	International temperature scale (fixed points)	1166.9 to 1945.4	Freezing points of Sb, Ag, and Au	0.36	Equation: $E = a + bt + ct^2$	0.54
Type R or S Platinum-rhodium* versus platinum	Fixed points	32 to 2642	Freezing point of Zn, Sb, Ag, and Au	0.36	Difference curve from reference table	0.9 to 2012 and 3.6 at 2642
	NBS Standard samples, fixed points	32 to 2642	Freezing point of Sn, Zn, Al, and Cu	0.36	"	0.9 to 2012 and 3.6 at 2642
	Comparison with standard thermocouple	32 to 2642	About every 200 deg F	0.54	"	0.9 to 2012 and 3.6 at 2642
	"	32 to 2642	About 1100 and 2000°F (or more points)	0.54	"	1.8 to 2012 and 5.4 at 2642
Type K Chromel-Alumel	Comparison with standard thermocouple*	32 to 2012	About every 200 deg F	0.9	Linear	1.8
	"	32 to 2012	About 900, 1500, and 2000°F (or more points)	0.9	Difference curve from reference table	3.6
	Comparison with standard resistance thermometer** or at fixed points	32 to 662	About every 200 deg F	0.18	"	0.9
	Comparison with standard resistance thermometer**	32 to −310	About every 100 deg F	0.18	"	0.9
Type S Iron-constantan	Comparison with standard thermocouple**	32 to 1400	About every 200 deg F	0.9	Linear	1.8
	"	32 to 1400	About 200, 600, 900, and 1400°F	0.9	Difference curve from reference table	1.8
	Comparison with standard resistance thermometer** or at fixed points	32 to 662	About every 200 deg F	0.18	"	0.9
	Comparison with standard resistance thermometer**	32 to −310	About every 100 deg F	0.18	"	0.9

Not for Resale

Copyright ASME International
Provided by IHS under license with ASME
No reproduction or networking permitted without license from IHS

TABLE 9.14 Continued

Type of Thermocouple	Methods of Calibration	Temperature Range, Deg F	Calibration Points	Accuracy at Observed Points, Deg F	Methods of Interpolating	Uncertainty in Interpolated Values
Type T Copper-constantan	Comparison with standard resistance thermometer** or at fixed points	32 to 572	About every 200 deg F	0.18	Equation: $e = at + bt^2 + ct^3$ or difference curve from reference table	0.36
	Comparison with standard resistance thermometer**	32 to 212	About 122, and 212°F	0.09	Equation: $e = at + bt^2$ or difference curve from reference table	0.18
	Fixed points	32 to 212	Boiling point of water	0.09	Equation: $e = \frac{a(t-32)}{1.8} + \frac{0.04(t-32)^2}{3.24}$	0.36
	Comparison with standard resistance thermometer**	32 to −310	About every 100 deg F	0.18	Equation: $e = at + bt^2 + ct^3$ or difference curve from reference table	0.36
	Fixed points	0 to −310	Sublimation point of CO_2 and boiling point of O_2	0.18	Difference curve from reference table	0.54

* Either 10 or 13 percent rhodium.
** In stirred liquid bath.

Not for Resale

cases, with the possible exception of iron, the emf may be taken as proportional to the difference between the temperatures of the two junctions, and when the emf is small, the corrections for the temperature changes of the reference junctions are negligible. In comparing two samples of iron, the emf developed is changed more by changing the temperature of the reference junctions than by changing that of the hot junction by the same amount. For example it was observed (in one case) that the emf (320 μV) developed by two samples of iron when one junction was at 1112°F and the other at 77°F changed by 0.06 μV for each degree change in the temperature of the hot junction and 0.78μV for each degree change in the temperature of the reference junctions.

Accuracies Obtainable

137 The accuracies obtained in calibrating the various types of thermocouples by different methods and the uncertainty in the interpolated values by various methods are specified in Table 9.14.

138 These accuracies may be obtained with homogeneous thermocouples when reasonable care is exercised in the test procedure. More or less accurate results can be obtained by the same methods. In the case of chromel-alumel and iron-constantan couples at low temperatures, the accuracies specified in Table 9.14 are limited by the uncertainty in interpolated values. However, this uncertainty can be greatly reduced by observing the emf of the couples at more points. The accuracy obtained with copper-constantan couples at low temperatures is usually limited by the emf measurements and in such cases the accuracy may be improved by employing a number of couples in series (multiple-junction couples).

139 When it is desired to test a thermocouple and leads or thermocouple, leads, and indicator as a unit by any of the methods described in the preceding paragraphs, no additional difficulties are encountered.

RESISTANCE THERMOMETERS

Comparison With Standard Platinum Resistance Thermometer

140 Platinum, nickel, and copper resistance thermometers are usually calibrated by comparison with a standard platinum resistance thermometer, though the ice point value can be determined without the use of a standard thermometer.

141 A calibration which is satisfactory for test code purposes is obtained by immersing a suitably protected thermometer winding in a thoroughly stirred water or oil bath. The temperature of the bath, which should be constant within the limits of error of the calibration, may be measured by means of a standard platinum resistance thermometer. For comparison with the standard platinum resistance thermometer at temperatures below the ice point, the thermometers may be immersed in alcohol in a container surrounded with dry ice. For still lower temperatures, a cryostat may be used in which the calibrating liquid is cooled with liquid air or liquid nitrogen. Refer to Pars. 44 to 46, inclusive.

142 A Mueller bridge as described in Par. 47 should be used in measuring the resistance of the standard bulb.

LIQUID-IN-GLASS THERMOMETERS

General

143 General Purpose Liquid-in-Glass Thermometers are calibrated by comparing their readings with those of standard platinum resistance thermometers or general purpose liquid-in-glass thermometers which have been standardized as secondary standards. Refer to Pars. 14 to 24, inclusive and Pars. 35 to 38 inclusive.

144 General Purpose Partial Immersion Thermometers, as commonly listed in manufacturers' catalogs according to their own specifications, are normally bought and sold without specification of the temperatures of the emergent column for the various temperature indications of the thermometers. In such cases, standardization is usually carried out for the emergent column temperature prevailing with the standardization equipment being employed.

145 In the Case of Special Use Partial Immersion Thermometers, the emergent mercury column or stem temperatures may be specified. Cognizance of those specified temperatures may be exercised in various ways. One method involves comparison of the thermometers at total immersion with total immersion standards. The number of degrees of scale, which will be in the emergent column when in actual use, shall then be measured. From these data the corrections under the specified emergent column tem-

Copyright ASME International
Provided by IHS under license with ASME
No reproduction or networking permitted without license from IHS
Not for Resale

peratures may then be calculated. In the case of organic liquid-filled thermometers the coefficient of expansion of the liquid should be obtained by experiment or from the manufacturer in order to perform these computations. This method has the advantage that the standard may be selected to have greater sensitivity than the thermometer being tested, thus increasing the accuracy of measurement. A second method, which is the one best suited to large-quantity testing, involves comparison of the thermometers with standards similar in all details of constructions above the immersion point, but differing below the immersion point to the extent of including an auxiliary ice point scale.

VISUAL INSPECTION

146 General. Thermometers should be inspected for gas bubbles in the bulb or liquid column, globules of liquid in the stem, foreign matter, and glass faults.

147 Gas Bubbles. Gas bubbles are readily detected and are more likely to occur in shipment than during service. No method has been discovered that will entirely prevent such displacement of the gas. If bubbles are observed in the bulb, they can generally be removed by cooling the bulb with dry ice or other convenient coolant until all the liquid is drawn into the bulb. Gentle tapping of the thermometer while held upright will cause the bubbles to rise to the surface. It is very important that, if the bulb is cooled in this process below the freezing point of the liquid, care should be exercised to warm the stem sufficiently during the melting process so that no solidification occurs in the stem; otherwise the bulb may burst or the capillary split internally because of the expansion forces generated in the bulb.

148 If gas bubbles are observed in the stem, several different ways are suggested for joining the columns, depending on the construction of the thermometer and the type of separation. If a small portion of the liquid has separated at the top of the column and the thermometer is provided with an expansion chamber, the liquid usually can be joined by carefully and slowly heating the bulb until the separated portion is driven into the expansion chamber. When the column itself flows into the chamber, the separated portion usually will join with the main column. A slight tapping of the thermometer against the palm of the hand will facilitate this joining. This method should not be employed for high-temperature thermometers (above 500°F), because the heating of the bulb, which is necessary to drive the liquid into the expansion chamber, may overheat the glass and either break the bulb as a result of the pressure of the gas or destroy the accuracy of the thermometer by expanding the bulb. Thermometers that have a contraction chamber below the lowest graduation are likely to develop separations either in the chamber or above it. It is frequently possible to join such separations by cooling the thermometer so that the separated portion as well as the main column both stand in the chamber. Tapping the tube against the hand, or tapping the bulb on a pad of paper will usually cause the separated portions of the liquid to join. For separations which are more difficult to join, it may be necessary to cool the bulb in dry ice to a point low enough to bring all of the liquid into the bulb itself. By softly tapping on a pad or against the hand it usually is possible to bring the liquid together in the bulb. Then the bulb should be allowed to warm up slowly. The liquid should emerge into the bore with no separation.

149 In organic-liquid-filled thermometers distillation may occur, with subsequent condensation of the colorless parent liquid in the upper part of the thermometer. Such thermometers should always be inspected for these separations which can be repaired by the procedures described above. If the thermometer has an expansion chamber that is observed to be filled with liquid, the column can be reunited by very careful heating of the chamber to drive the liquid into the bore whence it can be rejoined to the main body as described above.

150 Organic liquids as used in thermometers, in contrast to mercury, wet the glass. Sufficient time should always be allowed for drainage to occur, particularly when using or standardizing such thermometers below 32°F. It is frequently a good practice to immerse only the bulb of the thermometer until drainage has taken place, because drainage is appreciably retarded if the capillary is also cooled.

151 Globules of Liquid in the stem which result from mechanical separation can normally be rejoined by heating the bulb until the liquid column merges with the globules. If such globules appear to unite and then reappear upon cooling the bulb, this is indicative of oxidation of the mercury, or the presence of obstructions in the bore, and therefore, the thermometer should be rejected.

Copyright ASME International
Provided by IHS under license with ASME
No reproduction or networking permitted without license from IHS
Not for Resale

152 Foreign Matter in the bore can sometimes be detected with the unaided eye, but it is desirable and generally convenient to use a magnifying glass of low power for this examination. The most common types of foreign matter which should be cause for rejection are glass chips, particles of dirt or lint, oxide of mercury either red, yellow, or black, products of glass weathering commonly called white deposit, and stones or iron spots traceable to faulty glass fabrication.

153 Where a specific gas is specified to be used as filling above the liquid, any other gas present may be treated as foreign matter. The most common example is in the use of air instead of nitrogen in mercury-in-glass thermometers, which may have been introduced by accident or in violation of the specifications. The presence of air can readily be detected by heating the gas filled portion of the thermometer and a short section of the liquid column to a temperature of 650 to 700°F, using the same type of equipment as illustrated in Fig. 9.1. Under these conditions oxidation of the mercury will occur and will normally be evidenced by the production of crystals of red oxide of mercury after being heated 10 to 12 hr.

154 Glass Faults may be of various types. Any stones or striae that distort the bore or its appearance is sufficient cause for rejection. Strains in the glass as observed with a polarized light strain gage near enlargements in the stem or bore, or at the top of the thermometer, are detrimental if so severe that fire cracks may later occur. Strains near the bulb are indicative of incomplete glass stabilization and are particularly objectionable in thermometers for use above 320°F. The test for permanency of range will normally serve to reject high range thermometers in which this defect is most significant.

155 Test for Permanency of Pigment

(*a*) The test for permanency of pigment is designed to determine the ability of the pigment material used to fill the thermometer graduations and other markings to withstand the exposure conditions encountered in use without being obliterated.

(*b*) Place any convenient portion of the scale section of the thermometer to be tested in an oven of the type shown in Fig. 9.1. Heat for 3 hr at approximately 500°F. Allow it to cool slowly. Inspect the thermometer for differences in appearance of the tested and untested sections of the scale portion. Burning out, loosening, or chalking of the pigment shall be cause for rejection.

Test for Permanency of Range

156 The test for permanency of range is designed to determine the adequacy of the stabilizing heat treatment accorded the thermometer bulb during manufacture. An inadequately stabilized bulb will undergo shrinkage with time which may be significant, particularly at higher temperatures.

157 Determine the ice point of the thermometer to be tested and place it in a permanency of range comparator of the type illustrated in Fig. 9.2. Heat for 24 hr with the thermometer bulb at least at the temperature specified, or, in the absence of specifications, to not over 700°F for normal glass bulbs or 900°F for borosilicate bulbs. Allow it to cool slowly, and after 72 hr again determine the ice point. The difference in ice point readings is a measure of quality of the heat treatment accorded the thermometer in manufacture. If upon subsequent standardization the thermometer is within the prescribed tolerances, the thermometer shall be considered to have passed the test for permanency of range.

Calibration

158 General Considerations. Liquid-in-glass thermometers may be calibrated by observing readings at fixed points, such as the ice point, and by comparison with secondary standard thermometers selected in accord with the criteria discussed in Pars. 35 to 38, inclusive.

(*a*) *Reading Thermometers to Avoid Parallax.* The error due to parallax may be eliminated by (1) carefully observing the thermometer in a manner which will assure that the reflection of the scale can be seen in the mercury thread and (2) by adjusting the line of sight so that the graduation of the scale nearest the meniscus exactly hides its own image; the line of sight will then be normal to the stem at that point. When reading thermometers, one must realize that the scale lines are of appreciable width and compensate for this in arriving at the temperature. The best practice is to consider the position of the lines as defined by their middle parts.

Copyright ASME International
Provided by IHS under license with ASME
No reproduction or networking permitted without license from IHS
Not for Resale

(*b*) *Depth of Immersion for Total Immersion Thermometers.* Although by definition total immersion thermometers should have the entire index immersed, both in use and in standardization, it is frequently inconvenient to do so. If any portion of the index is exposed, the emergent mercury column correction should be determined. No correction need be applied if it is found to be less than one-fifth of the standardization error; otherwise the proper correction should be applied. In some instances total immersion thermometers may be used under conditions of complete immersion. A significant error may be introduced unless the thermometer is standardized under the same conditions as those in use. This is due to the effect of increased gas pressure above the column producing a distortion of the bulb.

(*c*) *Dept of Immersion for Partial Immersion Thermometers.* Thermometers of this type shall be standardized by one of the methods described in Pars. 38 (*b*) and 38 (*c*) inclusive, using the appropriate comparators. If the thermometer is of the general purpose type, it should be standardized by immersion to the specified depth and the readings compared with those of the secondary standard.

159 Calibration at Ice Point. Select clear pieces of ice, preferably made from relatively pure water. Discard any cloudy or unsound portions. Rinse the ice with distilled water and shave or crush into small pieces, avoiding direct contact with the hands or any chemically unclean objects. Fill the Dewar vessel with the crushed ice and add sufficient distilled and preferably precooled water to form a slush, but not enough to float the ice. Insert the thermometer, packing the ice gently about the stem, to a depth sufficient to cover the 32°F graduation. As the ice melts, drain off some of the water and add more crushed ice. For thermometers graduated in fractional degrees the thermometer should be held at room temperature for at least 72 hr, unless it is specified that the ice point be taken immediately after heating to a specified temperature. For thermometers graduated in single degrees or large subdivisions, this waiting period may be omitted.

160 Raise the thermometer a few millimeters after at least 3 min have elapsed, tap the stem gently, and observe the reading. Successive readings taken at least 1 min apart should agree within one-tenth of a division.

161 Alternatively, some of the ice may be heaped around the stem above the ice point and a deep narrow channel formed to permit observations of the meniscus which is thus kept well below the general level of the ice. Observations may then be made as described above without, however, raising the thermometer.

162 Record the readings and compare with previous readings. If the readings are found to be higher or lower than the reading corresponding to a previous standardization, readings at all other temperatures will be correspondingly increased or decreased. If the method involving the taking of the ice point immediately after heating to a specified temperature is used, a note should appear in the table of corrections for the thermometer, as follows:

NOTE: The tabulated corrections apply for the condition of immersion indicated, provided the ice point reading taken after heating to ..... for not less than 3 min is .....

163 If the ice point reading (taken in not less than 2 min and not more than 5 min after removal of the thermometer from the heated bath) is found to be higher (or lower) than stated, all other readings will be higher (or lower) to the same extent.

164 Calibration at Other Fixed Points. If the range of the thermometer is such that the ice point is not included, but one of the other fixed points is included, it may be used to advantage. For description of the equipment and techniques best suited to the purpose, reference may be made to the publications of the National Bureau of Standards and the Massachusetts Institute of Technology. The steam point, the triple point of benzoic acid, and the sulfur point are particularly worthy of mention.

165 Calibration at Temperatures Other Than Fixed Points. Determine the ice point of the secondary standard and the thermometer to be tested as described in Par. 127. If the secondary standard is of the liquid-in-glass type, it should be held at room temperature for at least 72 hr before this determination, unless the ice point was originally determined immediately after heating to a specified temperature. The thermometer to be tested should be treated in similar manner.

Copyright ASME International
Provided by IHS under license with ASME
No reproduction or networking permitted without license from IHS
Not for Resale

166 Insert the thermometer to be tested and the secondary standard in the thermometer holder, and adjust the temperature of the comparator to a value approximately 10 deg F below the standardization temperature. It may be advantageous to use two standard thermometers, since observational errors of the standard may then be readily detected. Apply sufficient heat to raise the temperature slowly at a uniform rate. The rate should not exceed one scale division in 3 to 10 min at the standardization point. Fulfillment of this requirement will ensure that any exposed portion of the stem will have attained thermal equilibrium before readings are taken.

167 When the proper rate of temperature rise has been established, read the thermometers in the following order at equal time intervals: standard, thermometer or thermometers to be tested, standard, thermometers to be tested in reverse order, standard. The average of the first and third readings of the standard should agree with the second. A comparison of differences in successive readings will also indicate if the rate of temperature rise has been uniform.

168 Calculate the average readings for all thermometers. Apply the appropriate corrections to the reading of the standard. Calculate the corrections to be applied to the thermometers under test.

169 For purposes of checking for compliance with specifications, one series of readings is usually sufficient. For purposes of standardization, check determinations should be made. The results of at least three series should agree within plus or minus one-tenth of a division.

170 Unless otherwise specified, tests should be made not less than 40 nor more than 100 divisions apart throughout the range of the thermometer.

171 Comparisons may be made at constant temperature in preference to the use of slowly rising temperatures. Such a procedure is satisfactory if the bath temperature does not vary more than the precision of reading and if the thermometer is jarred, as by tapping, before taking a reading in order to overcome any sticking of the mercury to the glass. Such tapping is particularly important with thermometers having a capillary diameter of the order of 0.1 mm or less and may be employed to advantage in the rising temperature method of test as well. Sufficient time should elapse before taking readings to ensure that all portions of the thermometer have attained thermal equilibrium. This is particularly important at test temperatures remote from room temperatures.

Checking for Changes in Bulb Volume

172 Small changes in volume of the thermometer bulb may occur during use. This is especially significant for large bulb and relatively short range thermometers graduated in fractional degreees, even though the thermometer has been carefully annealed or aged. Usually the bulb contracts slowly, and as a result the thermometer will read higher after it has been placed in service than it did originally. Less frequently the bulb expands and the thermometer will read lower after use than originally. When the thermometers are first received, make a monthly check of the ice point: later these time intervals may be lengthened if the changes are found to be insignificant.

Treatment of Data

173 From the corrections at the ice point and the other standardization temperatures, prepare a table of corrections for each thermometer standardized. If the thermometer is to be used frequently at temperatures other than those of standardization, a correction curve will be found more convenient than interpolation from a table. In such a curve the corrections are plotted against the temperature readings.

174 Where corrections are to be calculated for emergent columns, the method described in Chapter 5, Par. 37 shall be used.

175 The limit of precision to which the corrections at the standardization temperatures shall be recorded, to which correction tables or charts shall be made, or to which any temperature measured by the thermometer shall be reported is a measure of the sensitivity of the thermometer and is generally described by the phrase, "corrections stated to."

176 The limit of reliability of any temperature measurement made with a standardized thermometer, after carefully applying all corrections, is termed the "accuracy in degrees" of the thermometer.

FILLED SYSTEM THERMOMETERS

177 Filled system thermometers may be calibrated by any of the methods described under

Copyright ASME International
Provided by IHS under license with ASME
No reproduction or networking permitted without license from IHS
Not for Resale

"Liquid-in-Glass Thermometers," unless otherwise specified in some particular code.

178 The errors of the instrument should be determined at successive points on its scale while the temperature of the bulb is varied by steps in an ascending and in a descending order, successively. From these data a correction curve, such as shown in I & A, Part 1 on General Considerations, Figs. 3 and 4, should be drawn. It will be necessary to assume that the error between check points varies according to a straight-line law.

179 Any great variations of indications obtained with the temperature ascending and descending is the result of (*a*) not allowing sufficient time at any check point for establishment of temperature equilibrium, (*b*) loose fits in the mechanism of the instrument, (*c*) excessive hysteresis in the Bourdon spring, or (*d*) excessive friction between the pen and the chart. If excessive lost motion or friction is found it should be corrected before final calibration and use.

180 The pen movement of a recording instrument should be further checked by bringing the chart to such a position that the pen lies on one of the curved radial time lines of the chart. On multi-pen instruments no more than one pen can be adjusted to move along a time line. The others should move parallel to a time line. While holding the chart stationary in this position, the temperature of the bulb should be varied so that the pen travels to the limit of the chart. The failure of a pen to travel along the curved line or parallel to it indicates either a lack of adjustment in the multiplying system or a bent pen arm. The failure of the pen to trace the same curve with rising and falling temperature indicates loose fits in the mechanism. The chart should be checked for concentricity by revolving it upon its spindle when the bulb is at a constant temperature. If such faulty conditions exist, they should be eliminated before final calibration. Chart eccentricity can be corrected only by substituting one not having this fault.

181 In calibrating instruments of this type, the bulb and the indicating or recording part of the instrument should be at the same relative elevations as when in use. The bulbs of Class I and III Thermometers should be immersed to the same depth and the capillary tubing of the thermometers should be at a temperature which is as close as possible to the average service temperature. During calibration, the pressure of the air surrounding the Class I instrument should be as close as possible to the average service pressure [29]. If the bulb is used in a separable socket, it should be calibrated in the same separable socket. If properly filled, it is unnecessary to install the bulb in the same position as when calibrated.

182 Errors may be introduced by variations in the temperature of the capillary tubing of Classes I, III or V filled system thermometers, or by variations in the case (Bourdon spring) temperature of Classes I, II, III or V filled system thermometers. The magnitude of these errors can be determined in the following manner.

183 While holding the bulb temperature constant in a suitable bath, the capillary tubing and/or the entire instrument should be placed in a suitable environmental test chamber. The error introduced by the tubing and/or instrument can then be determined together or separately at various ambient temperatures.

The magnitude of the capillary and/or instrument error should be checked at the commonly used bulb temperature because it may vary with them.

OPTICAL PYROMETERS

184 At temperatures below 2750°F, checking and calibration may be accomplished by direct comparison of the optical pyrometer reading with the simultaneous reading of the emf of a standard platinum-platinum-rhodium thermocouple taken with a potentiometer. If points above 2750°F are to be checked, the comparison should be made against the reading of a standard optical pyrometer in the manner described later.

185 To carry out the former method, the thermocouple is heated in a closed furnace which is free of smoke and incandescent gases and at such a point in the furnace that that section of the thermocouple tube immediately surrounding the measuring junction of the thermocouple is visible through a "peep hole." If the test is made in a laboratory, a tubular type electric furnace should be used whose dimensions are not less than 24 in. long and not more than 1½ in. in diameter. The standard thermocouple in this case is inserted at one end of the furnace tube to such a depth as will bring the end of the thermocouple tube to the middle of the fur-

Copyright ASME International
Provided by IHS under license with ASME
No reproduction or networking permitted without license from IHS
Not for Resale

nace, the other end of the furnace being left open so that the end of the couple is in sight.

186 After heating the furnace to the desired temperature, it should be held as nearly constant as possible, and with the optical pyrometer sighted upon the end of the thermocouple tube, readings should be taken on each as nearly simultaneously as possible. Continue to take readings until equality or a constant difference between the standard thermocouple and the optical pyrometer is established.

187 When, as is usual, a range shifting device is a part of the optical pyrometer there will, in general, be a considerable overlap between the two or several ranges. In such a case, it is well to check at a point lying within the overlap, so that the reading may be applied to each scale and a check secured upon the accuracy of the range shifting medium.

188 For checking at points beyond the range of a platinum-platinum-rhodium thermocouple, the same procedure as outlined in the foregoing may be followed, substituting a standard optical pyrometer and a fire clay target for the standard thermocouple. The fire clay target is mounted in the furnace at the place normally occupied by the thermocouple and the standard and unknown alternately sighted into the same end of the furnace and read under conditions as described above.

189 A ribbon filament tungsten lamp is a very convenient means of checking optical pyrometer readings up to 4172°F (2300°C) in laboratories or plants, where it is possible to maintain an optical pyrometer calibrated by the National Bureau of Standards or other qualified laboratory. The filament should be at least 0.050 in. wide, and long enough to insure a uniform temperature over its central portion. A shallow notch in the filament marks the point at which settings are to be made. A flat window in the side of the bulb is desirable for viewing the filament, but it is not absolutely indispensable. While focusing the standard pyrometer on the flat filament, the current through the latter is adjusted to develop the desired pyrometer reading. The pyrometer to be checked is now substituted for the standard instrument and a reading made with it, the current in the flat filament being held constant at the value to which it was adjusted during the standard pyrometer reading. While the tungsten filament is not a black body, if the two optical pyrometers compared are of the same type, employing the same band of the spectrum in each, the readings of both will depart from the true temperature of the filament by the same amount. The standard pyrometer having been originally calibrated to read black-body temperatures, the pyrometer under check will be calibrated in the same terms.

190 As the tungsten filament pyrometer lamps are never intentionally operated at filament temperatures higher than 2700°F, they undergo practically no deterioration due to evaporation of the tungsten with resultant increase of filament resistance and blackening of the bulb. Lamps which have had years of service in industrial plants have shown no appreciable change in calibration. Lamp life is usually limited only by mechanical defects in the base or by breakage. Occasional checking is desirable, however, to eliminate errors due to dust or metal fragments on lenses, screens, and bulbs.

BIMETALLIC THERMOMETERS

191 Bimetallic thermometers are usually calibrated by comparing their readings with those of primary or secondary standard liquid-in-glass thermometers, using variable temperature comparators described in Par. 46 (*b*) and its subparagraphs.

192 Calibration at fixed points is generally not necessary because the accuracies involved are in the range of 0.5 to 10 deg F.

193 If a well is provided with the thermometer, it should not be used during calibration.

194 Before calibrating a bimetallic thermometer it should be checked for proper operation by subjecting it to variations of temperature within its range and observing that the pointer moves freely without sudden movements from point-to-point.

195 The bulb should be immersed at least 2 in. in the liquid bath of the comparators. A check should be made to determine that the immersion is sufficient by increasing it to determine if the reading changes.

196 The errors of the instrument should be determined at a minimum of five points on its scale while the temperature of the bath(s) is varied in ascending and descending order, successively. Sufficient time should be allowed at each check point to achieve

Copyright ASME International
Provided by IHS under license with ASME
No reproduction or networking permitted without license from IHS
Not for Resale

stability of temperature and equilibrium between the bath, the standard thermometer and the bimetallic thermometer. From these data a correction curve, as shown in I & A, Part 1 on General Considerations, Figs. 3 and 4, should be drawn. It will be necessary to assume that the error between check points is linear.

197 It is advisable to tap the instrument lightly before taking each reading. Excessive pointer movement upon tapping is indicative of excessive friction within the instrument and is cause for its rejection.

198 Any great variation of indications with the temperature ascending and descending is the result of (1) not allowing sufficient time at the check points for establishment of temperature equilibrium, or (2) lost motion, excessive friction, or hysteresis in the mechanism of the instrument. If due to (2), the instrument should be repaired or discarded.

REFERENCES

199 The following references are recommended:

"Standard Specifications for ASTM Thermometers," ASTM E-1-71.
"Method for Verification and Calibration of Liquid In-Glass Thermometers," ASTM E-77-70.
"Manual on the Use of Thermocouples in Temperature Measurement," STP 470 ASTM.
"Fundamentals of Temperature Pressure and Flow Measurements," Robert P. Benedict, John Wiley & Sons, Inc., N.Y., 1969.
"Calibration of Liquid-In-Glass Thermometers NBS Monograph 90," James F. Swindells, 1965.
"International Practical Temperature Scale of 1968," Robert P. Benedict, Leeds and Northrup Technical Journal No. 6, 1969.
"Temperature-Electromotive Force (EMF) Tables for Thermocouples," ASTM E230-72.
"Precision Measurement and Calibration," J. F. Swindells, Editor, NBS Special Publication 300, Vol. 2, August, 1968.
"Theory and Methods of Optical Pyrometry," H. J. Kostkowski and R. D. Lee, "Temperature, Its Measurement and Control in Science and Industry," Vol. 3, Part 1, p. 449, Reinhold, New York, 1962.

Copyright ASME International
Provided by IHS under license with ASME
No reproduction or networking permitted without license from IHS
Not for Resale

APPENDIX
Conversion Factors

To Convert from	To	Multiply by
degree Fahrenheit	degree Celsius (°C)	$t_C = (t_F - 32)/1.8$
degree Fahrenheit	kelvin (*K*)	$t_K = (t_F + 459.67)/1.8$
degree Fahrenheit	Rankine *(R)*	$t_R = (t_F + 459.67)$
degree Celsius	kelvin *(K)*	$t_K = t_C + 273.15$
foot/second	metre/second (m/s)	3.048 000* E - 01
foot	metre (m)	3.048 000* E -01
inch	metre (m)	2.540 000* E -02
pound-force/inch² (psi)	pascal (Pa)	6.894 757 E +03
pound-mass/foot³	kilogram/metre³ (kg/m³)	1.601 846 E +01
Btu in./s·ft² deg F	watt/metre-kelvin (W/m·K)	5.192 204 E +02
Btu/h·ft² deg F	watt/metre²-kelvin (w/m²·K)	5.678 263 E +00
foot²	metre² (m²)	9.290 304* E -02
Btu/hour	watt (W)	2.930 711 E -01
Btu/lbm · deg F	joule/kilogram-kelvin (J/kg·K)	4.186 800* E+0

*Relationships that are exact in terms of the base units are followed by an asterisk.

The factors are written as a number greater than one and less than ten with six or less decimal places. The number is followed by the letter E (for exponent), a plus or minus symbol, and two digits which indicate to power of 10 by which the number must be multiplied to obtain the correct value.

For example:

3.523 907 E–02 is $3.523\ 907 \times 10^{-2}$ or 0.035 239 07

Copyright ASME International
Provided by IHS under license with ASME
No reproduction or networking permitted without license from IHS
Not for Resale

INSTRUMENTS AND APPARATUS

These supplementary documents give descriptions of, and directions for, the use and calibration of measuring devices likely to be required.

A complete list of ASME publications will be furnished upon request.

--`,,,`,,`-`-`,,`,,`,`,,`---

C00035

Copyright ASME International
Provided by IHS under license with ASME
No reproduction or networking permitted without license from IHS

Not for Resale