ASME PTC*19.22 86 ■ 0759670 0052229 2 ■

AN AMERICAN NATIONAL STANDARD

ANSI/ASME
PTC 19.22-1986

PART 22

Digital Systems Techniques

INSTRUMENTS AND APPARATUS

Supplement to ASME

PERFORMANCE TEST CODES

THE AMERICAN SOCIETY OF MECHANICAL ENGINEERS
United Engineering Center
345 East 47th Street New York, N.Y. 10017

Copyright ASME International
Provided by IHS under license with ASME
No reproduction or networking permitted without license from IHS

Not for Resale

ASME PTC*19.22 86 ■ 0759670 0052230 9 ■

PART 22

Digital Systems Techniques

INSTRUMENTS AND APPARATUS

ANSI/ASME PTC 19.22-1986

SPONSORED AND PUBLISHED BY

THE AMERICAN SOCIETY OF MECHANICAL ENGINEERS

United Engineering Center 345 East 47th Street New York, N.Y. 10017

Copyright ASME International
Provided by IHS under license with ASME
No reproduction or networking permitted without license from IHS

Not for Resale

Date of Issuance: October 31, 1986

This document will be revised when the Society approves the issuance of the next edition, scheduled for 1992. There will be no Addenda issued to PTC 19.22-1986.

Please Note: ASME issues written replies to inquiries concerning interpretations of technical aspects of this document. The interpretations are not part of the document. PTC 19.22-1986 is being issued with an automatic subscription service to the interpretations that will be issued to it up to the publication of the 1992 edition.

This code or standard was developed under procedures accredited as meeting the criteria for American National Standards. The Consensus Committee that approved the code or standard was balanced to assure that individuals from competent and concerned interests have had an opportunity to participate. The proposed code or standard was made available for public review and comment which provides an opportunity for additional public input from industry, academia, regulatory agencies, and the public-at-large.

ASME does not "approve," "rate," or "endorse" any item, construction, proprietary device, or activity.

ASME does not take any position with respect to the validity of any patent rights asserted in connection with any items mentioned in this document, and does not undertake to insure anyone utilizing a standard against liability for infringement of any applicable Letters Patent, nor assume any such liability. Users of a code or standard are expressly advised that determination of the validity of any such patent rights, and the risk of infringement of such rights, is entirely their own responsibility.

Participation by federal agency representative(s) or person(s) affiliated with industry is not to be interpreted as government or industry endorsement of this code or standard.

ASME accepts responsibility for only those interpretations issued in accordance with governing ASME procedures and policies which preclude the issuance of interpretations by individual volunteers.

No part of this document may be reproduced in any form,
in an electronic retrieval system or otherwise,
without the prior written permission of the publisher.

Copyright © 1986 by
THE AMERICAN SOCIETY OF MECHANICAL ENGINEERS
All Rights Reserved
Printed in U.S.A.

Copyright ASME International
Provided by IHS under license with ASME
No reproduction or networking permitted without license from IHS

Not for Resale

FOREWORD

(This Foreword is not part of ANSI/ASME PTC 19.22-1986.)

The scope of the Instruments and Apparatus Supplements (PTC 19 Series) is to describe the various types of instruments and methods of measurement likely to be prescribed in the ASME Performance Test Codes. Such details as the limits and sources of error, methods of calibration, precautions, etc., as will determine their range of application are usually given.

PTC 19.22, Digital Systems Techniques, represents an extension of the purpose of the Supplements into the realm of digital systems. These are increasingly becoming an integral part of modern testing practice. In order that the ASME Performance Test Codes continue to provide test procedures characterized by the highest level of accuracy consistent with the best current engineering practice, it became necessary to develop a PTC document on this topic.

Accordingly, on November 18, 1969, the Performance Test Codes Standing Committee (now the Board on Performance Test Codes) authorized the organization of a Technical Committee to develop a Supplement on instrumentation for computer information. However, at that time it was difficult to obtain the services of qualified Committee personnel due to the relative novelty of applying digital systems to testing procedures. Nevertheless, a chairman was appointed by November 1972 and a report on the object and scope was issued on November 20, 1974. Regular Committee meetings began in 1976 and were held on a semiannual basis up to the present.

ASME Committee PTC 19.22 approved this document on October 22, 1984. PTC 19.22 was adopted by the Board on Performance Test Codes as a standard practice of the Society on February 19, 1985. It was adopted by the American National Standards Institute as an American National Standard on January 3, 1986.

Acknowledgement

The Committee wishes to acknowledge the contribution of past members D. Darkow of the Westinghouse Electric Corp., J. Davis of Duke Power Co., and H. Metha of the Bailer Meter Co.

Copyright ASME International
Provided by IHS under license with ASME
No reproduction or networking permitted without license from IHS
Not for Resale

PERSONNEL OF PERFORMANCE TEST CODE COMMITTEE NO. 19.22 ON DIGITAL SYSTEMS TECHNIQUES

(The following is the roster of the Committee at the time of approval of this Code.)

OFFICERS

G. A. Julian, *Chairman*
H. G. Crim, *Vice Chairman*
G. Osolsobe, *Secretary*

COMMITTEE PERSONNEL

J. L. Bethune III, The Foxboro Co.
H. G. Crim, Potomac Electric Power Co.
W. A. Edblad, Westinghouse Electric Corp.
G. A. Julian, Stearns Catalytic Corp.
T. C. Lee, (past Chairman), Bechtel Corp.
R. G. Livingston, General Electric Co.
G. E. MacNichol, Philadelphia Electric Co.
G. A. Oconer, Sargent & Lundy Engineers
R. W. Perry (past Chairman), Baltimore Gas & Electric Co.
G. R. Pistoll, Leeds & Northrup Co.
S. J. Safran, City Public Service Board of San Antonio
J. E. Snyder, Duke Power Co.

Copyright ASME International
Provided by IHS under license with ASME
No reproduction or networking permitted without license from IHS
Not for Resale

BOARD ON PERFORMANCE TEST CODES

C. B. Scharp, *Vice President*
W. O. Hays, *Secretary*

R. P. Benedict
W. A. Crandall
R. C. Dannettel
J. S. Davis
J. H. Fernandes
D. J. Fry
W. L. Garvin
G. J. Gerber
A. S. Grimes
K. G. Grothues
R. Jorgensen
A. Lechner
P. Leung
S. W. Lovejoy
W. G. McLean
J. W. Murdock
L. C. Neale
S. P. Nuspl
R. J. Peyton
E. Pitchford
W. A. Pollock
W. O. Printup
C. B. Scharp
J. W. Siegmund
J. C. Westcott

Copyright ASME International
Provided by IHS under license with ASME
No reproduction or networking permitted without license from IHS
Not for Resale

All ASME codes are copyrighted, with all rights reserved to the Society. Reproduction of this or any other ASME code is a violation of Federal Law. Legalities aside, the user should appreciate that the publishing of the high quality codes that have typified ASME documents requires a substantial commitment by the Society. Thousands of volunteers work diligently to develop these codes. They participate on their own or with a sponsor's assistance and produce documents that meet the requirements of an ASME consensus standard. The codes are very valuable pieces of literature to industry and commerce, and the effort to improve these "living documents" and develop additional needed codes must be continued. The monies spent for research and further code development, administrative staff support and publication are essential and constitute a substantial drain on ASME. The purchase price of these documents helps offset these costs. User reproduction undermines this system and represents an added financial drain on ASME. When extra copies are needed, you are requested to call or write the ASME Order Department, 22 Law Drive, Box 2300, Fairfield, New Jersey 07007-2300, and ASME will expedite delivery of such copies to you by return mail. Please instruct your people to buy required test codes rather than copy them. Your cooperation in this matter is greatly appreciated.

Copyright ASME International
Provided by IHS under license with ASME
No reproduction or networking permitted without license from IHS
Not for Resale

CONTENTS

Foreword iii
Standards Committee Roster v

0 INTRODUCTION 1
0.1 Purpose of Supplement 1
0.2 Test Code Applications 1
0.3 Performance Test Codes 2
0.4 Definitions and Values 2
0.5 Instruments and Apparatus Supplements 2
0.6 Deviations From Test Codes, and Instruments and Apparatus Supplements 2
0.7 Summary of Applications 2
0.8 Equipment Design and Application Considerations 3

1 OBJECT AND SCOPE 5

2 DEFINITIONS OF TERMS AND ABBREVIATIONS 5

3 GUIDING PRINCIPLES 9
3.1 Capability 9
3.2 System Planning 9
3.3 Test Plan 9
3.4 Typical Digital Systems 10

4 SENSOR CONSIDERATIONS 15
4.1 Measurement Parameters 15
4.2 Measurement Transducers 15

5 SENSOR SIGNAL CONVERSION 17
5.1 Signal Conditioning and Conditioners 17
5.2 Signal Multiplexing 26
5.3 Amplifiers for Low Level Signals 26
5.4 A/D Conversion 27

6 SYSTEM ERRORS 33
6.1 Random Errors 33
6.2 Systematic Errors 36
6.3 Tolerances and Limits of Error 36
6.4 System Accuracy 36

Copyright ASME International
Provided by IHS under license with ASME
No reproduction or networking permitted without license from IHS
Not for Resale

7 CALIBRATION 37
7.1 System Calibration Methods 37
7.2 Ambient Considerations 37
7.3 Sensor Corrections 37

8 DATA SUFFICIENCY 39
8.1 Introduction 39
8.2 Data Sampling 39
8.3 Data Analysis 39

9 DATA MANAGEMENT 45
9.1 Introduction to Data Management 45
9.2 Manually Prepared Data 47
9.3 Reduction of Test Data 47
9.4 Calculation of Results 52
9.5 Records and Test Reports 52

10 OPERATIONAL CONSIDERATIONS 53
10.1 System Validation 53
10.2 Pretest Checklist 53
10.3 Test Checklist 53
10.4 Software Checks on Digital System Data 53
10.5 Digital System Malfunctions During a Test 53

Figures

3.1 Basic Digital Data System Functional Diagram 10
3.2 Intermediate Digital Data System Functional Diagram 11
3.3 Advanced Digital Data System Functional Diagram 12
5.1 Basic Elements of Sensor Signal Conversion 18
5.2 Current to Voltage Signal Conditioning 19
5.3 Voltage Divider Signal Conditioning 19
5.4 Two Wire RTD Circuit 21
5.5 Three Wire RTD Circuit 21
5.6 Four Wire RTD Circuit 22
5.7 Constant Current Four Wire RTD Circuit 22
5.8 AC to DC Conversion Circuit 24
5.9 Typical Thermocouple Circuit 24
5.10 Passive Filter Frequency Response Curve 25
5.11 Counter Comparator A/D Converter 28
5.12 Successive Approximation A/D Converter 29
5.13 Dual Slope Integrating A/D Converter 30
5.14 Voltage to Frequency Integrating A/D Converter 31
8.1 Partial Pulse Calculation 40
9.1 Total Curve Fit 49
9.2 Offset Curve Fit 50
9.3 Offset Straight Line Segments 51

Tables

8.1 Student *t* Distribution 42
9.1 Percent Error Due to Insufficient Data Bits 46

Copyright ASME International
Provided by IHS under license with ASME
No reproduction or networking permitted without license from IHS
Not for Resale

Appendices

A	Illustration for Calculating the Number of Test Readings Required	55
B	1967 ASME Steam Property Functions	57
C	Evaluation of Digital System Component Errors and Analysis of Overall System Errors	59
D	References	67
E	Commonly Used Conversion Factors	69

Figure

C1	Digital System	60

Tables

C1	Typical Signal Conditioning Errors	61
C2	Cold Reference Junction Error in Percent Full Range for a 1°F Error	61
C3	Relay Type Multiplexer Errors	61
C4	A/D Conversion Errors	62
C5	Typical Digital System Errors	63
C6	Summary of Overall Digital System Errors for Analog Inputs	64
C7	Summary of Typical Errors Involved in Overall System Accuracy	64

Copyright ASME International
Provided by IHS under license with ASME
No reproduction or networking permitted without license from IHS
Not for Resale

ANSI/ASME PTC 19.22-1986
AN AMERICAN NATIONAL STANDARD

AN AMERICAN NATIONAL STANDARD

ASME PERFORMANCE TEST CODES
Supplement on
INSTRUMENTS AND APPARATUS
PART 22
DIGITAL SYSTEMS TECHNIQUES

SECTION 0 — INTRODUCTION

0.1 PURPOSE OF SUPPLEMENT

The purpose of this Supplement is to define the scope and application of digital system techniques for implementing data acquisition, calculations, and results presentation for use with ASME Performance Test Codes. This Supplement incorporates instrumentation practices covered by other Instruments and Apparatus Supplements (PTC 19 Series).

The Supplement is based on the use of digital systems covering a wide range of capability from simple data gathering equipment to multipurpose on-line or off-line data processing digital systems.

The justification for using digital techniques may be derived from a variety of reasons either chosen by or forced on the user by the unique circumstances surrounding the user. Among the benefits to be derived from applying these techniques are:

(a) savings in testing costs by reduction in manpower, length of test, amount of testing equipment, and computational time;

(b) improvement in accuracy and reliability of results;

(c) standardized methods and procedures;

(d) simplified documentation for test;

(e) providing uniform implementation of ASME Performance Test Code measurements;

(f) providing current pretest reasonability check of data and instrumentation;

(g) determining steady state conditions for test initiation and potential impact on test results;

(h) improved visibility of data during the test period.

0.2 TEST CODE APPLICATIONS

In general practice, the techniques of the ASME Performance Test Codes are applied for testing and on-line performance monitoring. Testing consists of acceptance or guarantee tests and routine or abbreviated tests. On-line monitoring refers to either equipment or system performance monitoring.

The implementation of each of the above applications is simplified by the use of automated digital data acquisition, calculation, and results presentation systems. Specifically, the field cost and time required is reduced and reliability of results is improved by elimination of human error.

Implementation of on-line monitoring applications of ASME Performance Test Codes in a timely manner and within acceptable limits is very nearly impossible without a digital system. This Supplement is prepared to assist users in implementing both testing and on-line

Copyright ASME International
Provided by IHS under license with ASME
No reproduction or networking permitted without license from IHS
Not for Resale

monitoring using ASME Performance Test Code techniques with digital systems.

Each of the above applications is briefly described below.

0.2.1 Acceptance Testing. An acceptance test is a code level test for the purpose of establishing or demonstrating equipment performance for comparison to specified or standard performance. Implementation of this type of test requires strict adherence to ASME Performance Test Code procedures. The highest level of accuracy is desired consistent with current technology and cost justification.

This type of test is usually performed during the early operating life of the equipment to be tested.

0.2.2 Routine Testing. Routine (abbreviated) testing does not require adherence to ASME Performance Test Code procedures. Simplification is achieved by ignoring items of lesser significance to test results. The main objective of routine testing is to validate equipment operation within wider limits of acceptable performance margins and to observe any deterioration in performance over a period of time for maintenance and other appropriate corrective action. Unlike acceptance testing, routine testing is performed periodically throughout the equipment life.

0.2.3 Equipment Performance Monitoring. For equipment performance monitoring in most industrial and utility operations, it is possible for the operator to take action and establish values of key parameters to optimize equipment and plant (unit) performance. On-line systems are used to display to the operator/engineer current performance, expected performance, analysis of deviation, and effect on performance of major controllable parameters. These calculations are performed on-line at regular time intervals.

0.2.4 System Monitoring. In many cases, system performance monitoring is applied when the equipment covered by ASME Performance Test Codes is used as an integral part of an overall steam and/or power generation system to satisfy the overall demand. Several steam and/or power generation units and plants may be involved. In determining the economic operation of the overall system, on-line calculation of current and incremental performance of each unit is desirable.

0.3 ASME PERFORMANCE TEST CODES

The Code on General Instructions (PTC 1) and the appropriate ASME Performance Test Code should be studied and followed in detail when preparing the procedure for a specific ASME Performance Test Code application of a digital system.

0.4 DEFINITIONS AND VALUES

The ASME Code on Definitions and Values (PTC 2) defines certain technical terms and numerical constants that are used throughout this Supplement. Therefore, PTC 2 should also be studied when applying a digital system.

0.5 INSTRUMENTS AND APPARATUS SUPPLEMENTS

The appropriate Instruments and Apparatus Supplements of the PTC 19 series and specifically PTC 19.1, Measurement Uncertainty, should also be studied and appropriate sections applied when developing digital system techniques.

0.6 DEVIATION FROM TEST CODES, AND INSTRUMENTS AND APPARATUS SUPPLEMENTS

The use of digital systems may require deviations from procedures defined in current ASME Performance Test Codes and Instruments and Apparatus Supplements. Any deviation from ASME Performance Test Code procedures should be carefully reviewed to satisfy all parties involved in the test.

0.7 SUMMARY OF APPLICATIONS

In summary, for use of this Supplement with any of the applications of ASME Performance Test Codes, the following documents should be reviewed (see also Appendix D):

(a) PTC 1;
(b) PTC 2;
(c) PTC 19.1;
(d) appropriate ASME Performance Test Codes;
(e) appropriate ASME Performance Test Code Reports and Guides;
(f) appropriate Instruments and Apparatus Supplements.

Copyright ASME International
Provided by IHS under license with ASME
No reproduction or networking permitted without license from IHS

Not for Resale

0.8 EQUIPMENT DESIGN AND APPLICATION CONSIDERATIONS

In preparation of Instruments and Apparatus Supplements, it is customary to describe and recommend instrument design, installation, application, calibration, validation, etc. Such complete treatment for digital systems is presently impractical since these systems are rapidly evolving.

Copyright ASME International
Provided by IHS under license with ASME
No reproduction or networking permitted without license from IHS

Not for Resale

SECTION 1 — OBJECT AND SCOPE

PTC 19.22 augments the ASME Performance Test Codes and other Instruments and Apparatus Supplements by providing guidance for reliable results when digital equipment is used. This Supplement includes guidance for the determination of data accuracy and repeatability, computational limitations, and sufficiency of data to satisfy the requirements of ASME Performance Test Codes.

Equipment performance indices and the equations for their correct calculation are explicitly defined in the individual ASME Performance Test Codes. The instrumentation to be employed in applying these Codes is specified directly in the applicable Code or referenced in the appropriate Supplement.

SECTION 2 — DEFINITIONS OF TERMS AND ABBREVIATIONS

Definitions are provided to clarify the terms used in this document. Sources include applicable portions of IEEE Standard 100, ISA Dictionary of Industrial Computer Terminology, and the PTC 19 Series.

accuracy — the state of being accurate (in exact conformity to a standard). The accuracy of an element or an overall system is the measure of the extent to which the output value agrees with the true value of the input. Accuracy is usually expressed in terms of inaccuracy or as the magnitude of error in the output value relative to the true value of the input. It is defined in terms of percent of the measurement range; for example, percent of full range (±1% FR), percent of reading (±0.1% of 50 psig), or percent of span (±1% of 12 in.).

analog signal — a continuous representation of a physical quantity, property, or condition, such as pressure, flow, temperature, etc.

analog-to-digital (A/D) converter — any device used to convert an analog signal to corresponding digital information

attenuate — to obtain a fractional part; to obtain a reduction in amplitude of an action or signal. Attenuation is usually expressed in decibels.

bandwidth — the difference between selected limiting frequencies of a continuous frequency band. Bandwidth is used to specify the performance of a device between limiting frequencies.

baud — bits per second. A contraction of the name *Baudot*, who was an early pioneer in data communications. Baud is normally used as the unit to define the speed of transmission in digital data communication channels. For example, 180 baud line is a transmission line capable of handling 180 bits per second.

binary word — the maximum number of bits treated as a unit and capable of being stored in one location

bit — a contraction of the words *binary digit*

common mode rejection (CMR) — the ability of the system to reject a common mode signal while responding to a desired differential signal. CMR is usually expressed as a ratio or in decibels.

common mode voltage — a voltage signal of the same polarity and magnitude on both sides of a differential input and often caused by a common path. For example: the voltage at both analog input terminals of a differential amplifier which can be raised above or below the system logic ground. Common mode voltage is the

Copyright ASME International
Provided by IHS under license with ASME
No reproduction or networking permitted without license from IHS
Not for Resale

voltage with respect to system logic ground that these inputs may be raised or lowered to while the system still processes the desired differential input signal.

crosstalk — the undesired signal appearing in one signal path as a result of coupling from another signal path

data — a collection of symbols and numeric and alphabetical characters denoting value or state which is processed or produced by a digital system. *Data* is properly plural, the singular form being *datum*, but, in common usage, *data* is taken as plural or singular.

data link — equipment which permits the transmission of digital data

decibel (dB) — a unit for measuring the relative strength of a signal parameter such as power, voltage, etc. The number of decibels is 20 (10 for power ratio) times the common logarithm (log) of the ratio of the measured quantity to the referenced level. For example, a voltage ratio would be defined as $dB = 20 \log V/V_o$, where dB is in decibels, V = measured voltage, and V_o = reference voltage.

digital system —

(a) any device or collection of devices capable of accepting information (converting this information to corresponding digital information), applying prescribed processes to the information, and supplying the results of the processes;

(b) a device capable of performing sequences of arithmetical and logical operations;

(c) a device capable of performing sequences of instructions which are either manually impressed, read in from cards, tape, etc., or internally stored

full range (FR) — the absolute value of the algebraic difference between the minimum and maximum value for which the analog input or analog output section components of a digital system are defined. For example:

Definition	FR
±10 mV	20 mV
−10 mV to +50 mV	60 mV

gain error — the deviation of the mean of a normal or Gaussian distribution from the actual value, which is expressed in percent full range (% FR) and as a gain dependent error. Gain error is defined at a temperature, and the proper gain error coefficient must be taken into account as the temperature deviates.

LSB — an acronym for *least significant bit*

MSB — an acronym for *most significant bit*

multiplexer — a device which samples multiple inputs and/or outputs and interlays signals in frequency and/or time into a single channel. For example, a multiplexer is a device that selectively connects a number of signals to a common output.

noise — an unwanted component of a signal capable of interfering with the desired signal

octave — the interval between two frequencies having a ratio of 2:1

precision — the measure of repeatability of the output value for a constant input signal. Precision is affected by the number of digits (degree of discrimination) used to define the output value. Precision should not be confused with accuracy. An output value may have more precision than it has accuracy. For example, the true value of pi to six significant digits is 3.14159; the value 3.14162 is precise to six digits but is only accurate to five digits.

quantization error — the inherent uncertainty in digitizing an analog value due to the finite resolution of the conversion process. The quantized value is uncertain by up to one-half of the value represented by the LSB.

reasonableness test (reasonability) — a test providing a means for detecting a gross data error by comparing results against upper and lower limits representing an allowable and reasonable range

reference voltage — a stable voltage over time and temperature for use in A/D converters, bridge circuits [such as resistance temperature detectors (RTDs)], and as a standard for automatic gain calibration or gain error monitoring

repeatability — the closeness of agreement among repeated measurements of the same variable under the same conditions (see *precision*)

repeatability error —this error is expressed as a $\pm 3\sigma$ deviation from the mean X. A 3σ means that for a normal distribution, 99.7% of all readings are within this $\pm 3\sigma$ range. In terms of evaluation of the analog system, $\pm 3\sigma$ specifies that 0.3% of N readings may be disregarded. The readings to be disregarded are the readings farthest from the mean. Repeatability error is expressed as a percentage of full range (see PTC 19.1).

repetitive scan rate — the maximum rate at which any one input data point may be scanned

resolution — the least interval between two adjacent discrete values which can be distinguished one from another

response time — the time required for the output value to first reach a predetermined percentage of the final value after the application of a step change in the input

roll-off — a gradual increasing loss or attenuation with

Copyright ASME International
Provided by IHS under license with ASME
No reproduction or networking permitted without license from IHS

Not for Resale

increase or decrease of frequency beyond the substantially flat portion of the amplitude-frequency response characteristic of a device (for example, a filter)

sample rate — see *scan rate*

scan — collection of data from process sensors by a digital system, usually obtained through a multiplexer; sequential interrogation of devices or lists of data under program control

scan rate (also known as *sample rate*) — the speed at which a digital system can select and interrogate the input variables. Usually it is expressed in points per second.

sensitivity — the ratio of the change in output signal to the unit change in input signal of a device, program, or system. For example, in the case of a temperature measurement, the sensitivity could be 0.7 mV/°F; for a pressure measurement, 1 mA/psi; and for an A/D converter, 2000 counts/mV.

signal conditioning — to process the form or mode of a signal so as to make it intelligible to or compatible with a given device, including such manipulation as pulse shaping, pulse clipping, digitizing, and linearizing

software — the collection of a set of coded instructions (referred to as a *program*) which is to be executed by the digital system to produce the desired results

suppression —

(a) the addition of bias to a process signal;

(b) the elimination of nonsignificant zeros in a numeral

uncertainty — estimated amount by which the observed or calculated value of a quantity may depart from the true value

zero offset — the magnitude of the output signal when the input signal is zero

Copyright ASME International
Provided by IHS under license with ASME
No reproduction or networking permitted without license from IHS

Not for Resale

SECTION 3 — GUIDING PRINCIPLES

3.1 CAPABILITY

Digital systems are capable of replacing many of the manual procedures which were, in the past, required to be implemented by test personnel. Computations and test reporting, complete with headings, tables, graphs, and curves are now available from digital systems. The satisfactory use of a digital system depends largely upon the familiarity that the user has with the system and its application. The successful application is dependent upon the ingenuity and skills derived by a user who is well acquainted with the overall system, including the hardware and software.

3.2 SYSTEM PLANNING

Most large plants being planned or constructed will have some type of automated information system. These range from simple sequential type data loggers to complex digital systems with on-line performance monitoring, logging, alarming, and control capabilities. The availability of these systems makes it desirable to consider their application to performance monitoring and acceptance testing. Whenever equipment acceptance tests are to be conducted, it is desirable to establish measurement procedures during the design of the plant. The lead time for the recognition of all the instrumentation and testing provisions is increased when digital systems will be used for part or all of the information gathering and computation.

Experience indicates that it is difficult to run acceptance tests as soon after initial equipment start-up as is suggested by the ASME Performance Test Code. However, the availability of an on-site digital system might reduce the elapsed time between start-up and testing, especially if the system is permanent and is required to be operational to support the start-up.

Successful automated acceptance testing can only be accomplished if sufficient effort is expended to assure adequate design of the digital system. There is some incentive for providing sufficiently accurate instrumentation to conduct acceptance tests using a digital system. Where a digital system is already planned as a permanent installation, the incremental cost of additional and more accurate instrumentation and additional programming may be comparable to the cost of conducting the test manually.

An advantage of using a digital system is realized after the acceptance test is run. The system is still available for obtaining accurate on-line performance monitoring with stored historical data for analysis and comparisons.

Portable digital systems are appropriate for testing similar equipment in separate locations. The overall test costs may be reduced in this application.

3.3 TEST PLAN

In order to appreciate the role of a digital system in testing processes, a detailed test plan should be developed and accepted by all parties. A typical plan should fulfill the following functions.

(a) Determine the number, quality, and type of tests to be run.

(b) Review the appropriate ASME Performance Test Code(s), Supplements, and references to determine the required test report parameters.

(c) Determine the output format and written presentation of the final test data.

(d) Organize the test setup by including lists of equipment required, location of measurement points, and personnel required to conduct the test(s).

(e) Determine the number and type of sensor inputs. The number, type, and accuracy of intermediate calculations are also determined in this step.

(f) Determine if the digital system is capable of accommodating the test plan. The scope of this Supplement does not include design guidelines for acquiring a digital system. Some considerations required, but not presently addressed in this Supplement, include:

(1) the size and type of working and bulk memory;

(2) the capability and type of output devices (printers, plotters, CRT, paper or magnetic tape, etc.);

(3) the capability of the data base management and calculations programs (operator interface, system scan rate, alarm presentation, etc.);

Copyright ASME International
Provided by IHS under license with ASME
No reproduction or networking permitted without license from IHS

Not for Resale

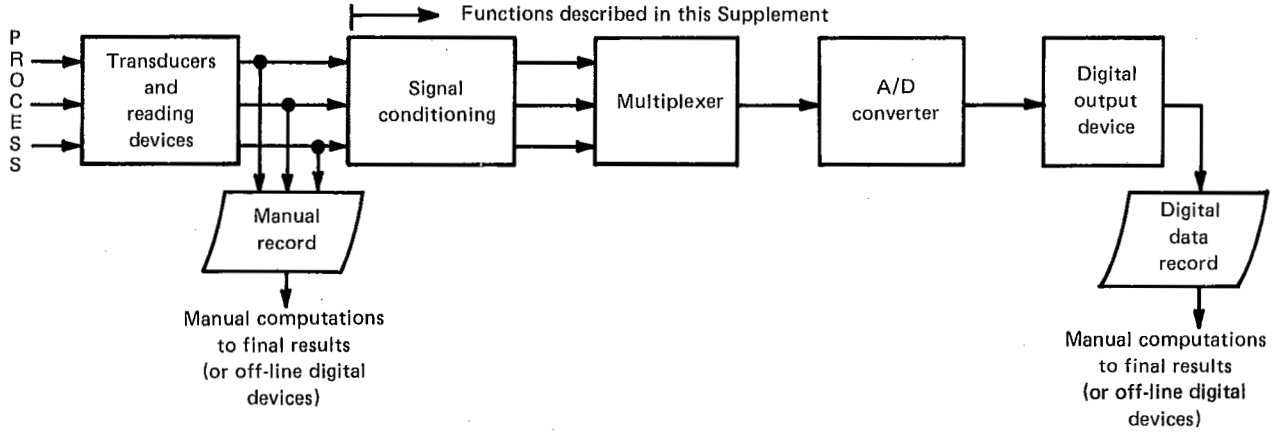

FIG. 3.1 BASIC DIGITAL DATA SYSTEM FUNCTIONAL DIAGRAM

(4) the reliability of the power supply to the digital system;

(5) the location of the digital system relative to the tested equipment, and the heating, ventilating, and air conditioning requirements.

(g) Develop a calibration procedure for the inputs. This usually includes pretest sensor and system calibrations as well as data verifications accomplished during the test.

(h) Connect the inputs to the digital system and calibrate them per the developed procedure. In the advanced systems, several test cases are usually prepared and used to validate the computational integrity prior to the test(s).

(i) Define the criteria for data rejection prior to the test(s).

(j) Analyze and present the final report after the test(s) is conducted.

3.4 TYPICAL DIGITAL SYSTEMS

Data systems are as varied and numerous as the people designing them. This paragraph categorizes data systems in an elementary manner and addresses the functions which each category performs. Three systems are defined in order to illustrate the degree of complexity of the digital systems discussed in this Supplement.

3.4.1 Basic Data System. The basic digital system as illustrated in Fig. 3.1 is capable of reading a number of measurements and producing a digital data record of each individual reading. The basic system data record may or may not be presented in engineering units.

3.4.2 Intermediate Data System. The intermediate data system as illustrated in Fig. 3.2 may include any of the previously described capabilities with any of the following capabilities:

(a) high density record — data is stored on a storage device such as magnetic tape or disc

(b) averaging function — individual data readings are summed and averaged over desired time intervals, producing an averaged record of interest during the test period

Copyright ASME International
Provided by IHS under license with ASME
No reproduction or networking permitted without license from IHS
Not for Resale

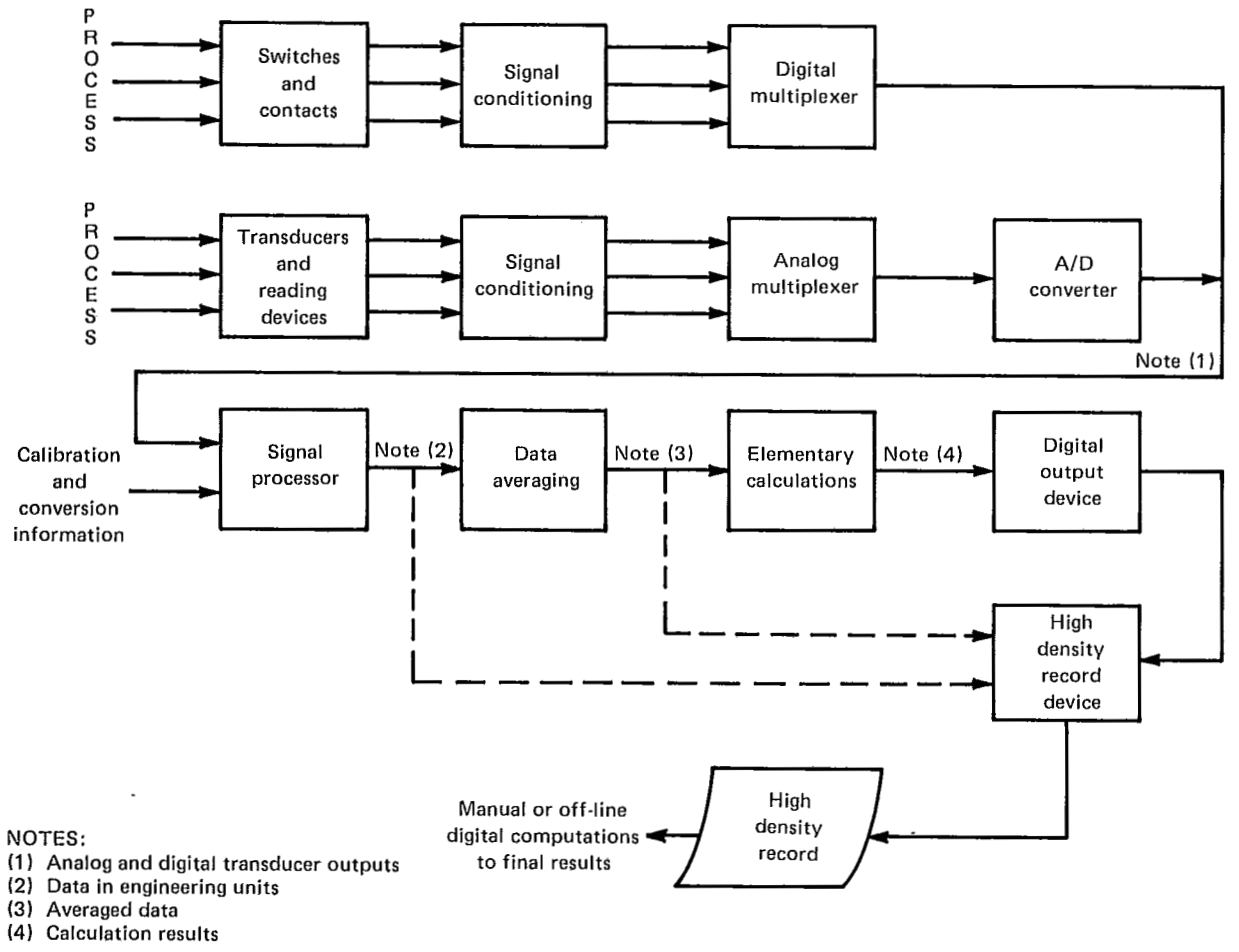

FIG. 3.2 INTERMEDIATE DIGITAL DATA SYSTEM FUNCTIONAL DIAGRAM

Copyright ASME International
Provided by IHS under license with ASME
No reproduction or networking permitted without license from IHS

Not for Resale

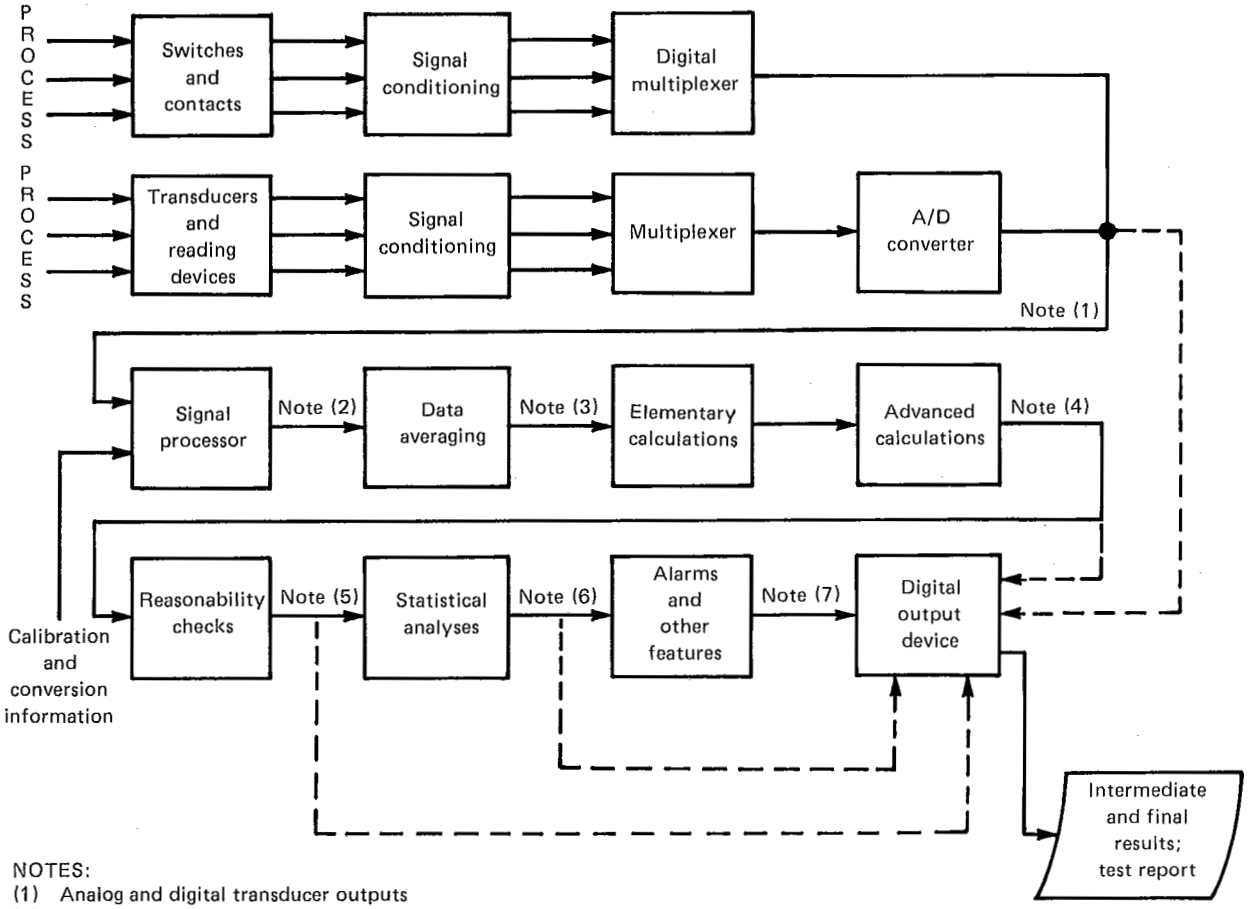

NOTES:
(1) Analog and digital transducer outputs
(2) Data in engineering units
(3) Averaged data
(4) Test calculation results
(5) Data checks
(6) Scan frequency and data cross checks
(7) Alarm messages, etc.

FIG. 3.3 ADVANCED DIGITAL DATA SYSTEM FUNCTIONAL DIAGRAM

Copyright ASME International
Provided by IHS under license with ASME
No reproduction or networking permitted without license from IHS
Not for Resale

(c) processing function — data is corrected for instrument calibration and converted to engineering units

(d) elementary calculations — calculations are performed which involve only limited computational capability such as that of a programmable calculator

3.4.3 Advanced Data Systems. The advanced data system as illustrated in Fig. 3.3 may include any of the previously described capabilities with any of the following additions:

(a) advanced calculations — calculations are advanced to the point of analyzing the test results

(b) reasonability checks — the system outputs are compared to a preprogrammed data base. Comparison of redundant measurements can also be performed.

(c) statistical analyses — process fluctuation frequencies are analyzed in order to evaluate scan frequency adequacy. Statistical information on individual measurements is examined to determine whether fluctuations originate with the process or with the measurement system.

Copyright ASME International
Provided by IHS under license with ASME
No reproduction or networking permitted without license from IHS

Not for Resale

SECTION 4 — SENSOR CONSIDERATIONS

The purpose of this Section is to present information concerned with the type of measurements and measuring transducers utilized with digital systems.

4.1 MEASUREMENT PARAMETERS

The selection of instrumentation is guided by the requirements of the application. The appropriate Instruments and Apparatus Supplements and other recognized standards should be reviewed to first determine if the instrument selected meets the minimum requirements.

4.1.1 Instruments and Methods of Measurement. In some instances, precision measurements for digital systems will require different type sensors than those sensors used for manual data acquisition systems. The adequacy of the measurement system should be evaluated relative to the following parameters:

4.1.1.1 Range. Care must be exercised to insure that the ranges of the sensor signals are compatible with the capability provided by the digital system.

4.1.1.2 Sensitivity. A digital system can provide the desired system sensitivity if the elements of the system are selected and matched properly. Care must be exercised to provide elements in the digital system that will not degrade the overall system sensitivity, including the sensitivity of all components in the measurement chain.

4.1.1.3 Precision. A digital system can provide the desired precision if all the individual components of the system, including sensors, are selected for the desired repeatability and the programs formulated to provide the output value with the appropriate number of significant digits (resolution). The output value precision should be consistent with the output value accuracy to avoid false confidence in the output value. If a digital system is capable of storing and applying calibration data, repeatability of the sensor is more important than its base accuracy.

4.1.1.4 Accuracy. The accuracy of the appropriate sensor selected for the particular measurement must be considered in order to meet the overall system accuracy requirements. See Appendix C for examples of the effect that various sensors have on the overall system accuracy.

4.1.1.5 Response. The low inertial characteristics of some sensors used with digital systems provide faster response to changes of the measured variable than those sensors provided for manual readout. Similarly, the digital system has a faster response than most manual measurement systems. The combination of this sensor and system response results in higher sensitivity to process variations and electrical noise. Undesirable variations may be minimized by filtering techniques.

4.2 MEASUREMENT TRANSDUCERS

After determining the need for a digital system measurement, the selection of transducer type and signal type should be considered.

4.2.1 Analog Inputs. The selection of sensors as inputs to digital systems should be in accordance with the appropriate referenced Supplements for Instruments and Apparatus (see Appendix D) and the following considerations.

(a) When selecting pressure sensors, refer to PTC 19.2, Pressure Measurement.

(b) When selecting resistance thermometers or thermocouples, refer to PTC 19.3, Temperature Measurement.

(c) When selecting a primary flow element with an associated differential pressure transducer, refer to PTC 19.2, Pressure Measurement, and PTC 19.5, Application, Part II of Fluid Meters.

(d) When selecting a voltmeter, ammeter, wattmeter, or varmeter, refer to PTC 19.6, Electrical Measurements.

Copyright ASME International
Provided by IHS under license with ASME
No reproduction or networking permitted without license from IHS

Not for Resale

(e) Analog signals from sensors or transducers used primarily for control or indication are sometimes used jointly as inputs to digital systems. Caution should be exercised to insure control and signal circuit integrity as well as calibration accuracy to meet the test requirement.

(f) For maximum accuracy, input signals to digital systems should be obtained from primary sensors. For example, flow measurements should be made directly from differential pressure transducers, not from square root extractor modules. The precision and accuracy of software formulations for the linearization of nonlinear signals is superior to hardware linearization techniques. Also, flow compensation which considers actual pressure and temperature should be performed by the digital system.

(g) Some temperature measurements use the average signal from multiple thermocouples. This signal may be obtained by connecting the thermocouples utilizing a paralleling or averaging circuit containing current limiting "swamping" resistors. This is sometimes referred to as a *swamping circuit*.

This paralleling circuit introduces an error due to the difference in EMF outputs of the individual thermocouples. This error cannot be determined with reasonable accuracy since the EMF differences are random and the thermoelectric characteristics are nonlinear.

Caution is recommended in obtaining this type of test data to assure meeting the accuracy requirements of the ASME Performance Test Codes.

In most cases it is desirable to provide separate thermocouple inputs and obtain averaged values via software in the digital system.

4.2.2 Contact Inputs. The use of contact inputs in digital systems is limited, since measured data is normally transmitted via analog or pulse type signals. Contact inputs may be used to automatically condition the acceptance or rejection of data, or to change the operational range of a sensor input. For example, the gathering of data may be triggered by a status change contact input. The opening and closing of a valve may time the filling of a weigh tank by the use of separate open and close limit switch contact input signals to the digital system. The scan frequency should be considered to insure that an unacceptable timing error is not introduced. The commonly used 1 sec scan interval for contact inputs of most digital systems normally does not introduce noticeable error. When the digital system allows and timing accuracy requires, computer interrupts can be utilized to initiate software action.

4.2.3 Pulse Inputs. Integrating pulses over a specified period of time, such as pulses from watthour meters, tends to be much more accurate in a digital system because it eliminates the A/D conversion errors. It should be noted that the multiplying factor on pulse type instruments must be accurately determined to prevent introduction of error. Similar considerations apply when selecting a flow device which develops pulse signals.

The accuracy of pulse inputs is a function of the error in the device developing the pulses proportional to the process variable and the number of pulses counted in a given time period. Devices such as watthour meters with pulse outputs are inherently accurate. However, an adequate number of pulses should be used for the given time period to provide the desired accuracy. For example, if a maximum of 100 pulses can be counted in a given time period and 1 pulse is missed, this represents a 1% error. Increasing the pulse rate to 1000 will reduce the error caused by the loss of 1 pulse to 0.1%. The error due to missing a pulse because of asynchronous timing can be virtually eliminated with a digital program which calculates fractional pulses. The program would be designed to determine the fraction of a pulse missed both at the beginning and ending of the time period. The calculation of fractional pulses is most accurate when the pulse rate is uniform over the time period. (See para. 8.2.3 for further details.)

4.2.4 Group Digital or Register Inputs. Certain types of instrumentation provide a group of digital inputs to represent a discrete quantity. Examples are hardware pulse accumulations, direct digital transducers, and outputs of digital clocks. The types of code are classified as *ambiguous* and *nonambiguous*. Ambiguous codes are those where more than one bit of the code changes for each change in value. The usual types of ambiguous codes are binary and Binary Coded Decimal (BCD). An example of a nonambiguous code is the Gray Code. Ambiguous codes need a buffer which can be prohibited from changing while being sampled. Nonambiguous codes may be sampled randomly without interruption. The maximum error introduced by nonambiguous codes is ± 1 count.

Copyright ASME International
Provided by IHS under license with ASME
No reproduction or networking permitted without license from IHS

Not for Resale

SECTION 5 — SENSOR SIGNAL CONVERSION

Sensor signal conversion involves the reading of sensor values and converting them to a digital form for use in the digital system. The basic elements as shown in Fig. 5.1 are signal conditioning (para. 5.1), multiplexing (para. 5.2), amplification (para. 5.3), and A/D conversion (para. 5.4).

5.1 SIGNAL CONDITIONING AND CONDITIONERS

Signal conditioning as used in this Supplement is a term that in a broad sense means to modify a signal to make it suitable for measurement by digital systems. This definition could also include the transducer; however, discussion of the transducer is covered in other Instruments and Apparatus Supplements. Signal conditioning in this Supplement is limited to a discussion of those techniques which are applied to signals prior to conversion at the digital system end of the cable.

For the purpose of this Supplement, the term *signal conditioners* is used to define those devices and circuits which are used to change the type or form of the measured signal. The change is required to compensate or make the available signal compatible with the requirements of the analog input equipment.

5.1.1 Current to Voltage. Generally, analog input equipment is designed with high impedance devices and has DC input voltage ranges which may be as low as 0 to 10 mV or as high as 0 to 10 V. Thus, a current signal, say in the range of 4 to 20 mA, must be converted to an appropriate input voltage range. This conversion can be accomplished simply with a series resistor in the current loop (see Fig. 5.2).

When selecting the resistor, two precautions should be taken. The loading of the transducer should be considered. If the loop resistance is too high, the transducer may not be able to provide the required current. The transducer specifications should be consulted and the total resistance in the loop considered. When more than one device is used in series in a current loop, care must be taken that the devices do not affect the circuit current flow. For example, a galvanometer recorder will produce a back EMF during changing currents, or a sampling multiplexer may cause a change in the load impedance when the sample is taken. If this interference is suspected, the device should be buffered with an isolation amplifier. Caution should be exercised concerning the physical mounting of the resistor. If the resistor is on a plug replaceable card, the loop will be broken when the card is removed for maintenance. This will render all other instrumentation in that loop inoperative.

The resistor selected for this application should have an accurately known resistance and a low temperature coefficient.

The circuit in Fig. 5.2 shows the resistor for the digital system wired with one leg grounded to reduce noise. Common mode noise rejection may be accomplished by the use of a differential type amplifier (not shown).

5.1.2 Voltage Divider. A voltage divider (see Fig. 5.3) provides a simple means of reducing a voltage source to a voltage which is compatible with the analog input equipment range. The voltage equation is

$$V_o = (R_2 \times V_i)/(R_1 + R_2)$$

The values of R_1 and R_2 should be selected by considering the loading of the source and the input impedance of the analog input equipment.

The transducer specifications should be consulted to determine the minimum value of $R_1 + R_2$. Be sure to consider any other instruments in parallel with the divider. The input impedance of the analog input equipment is used to determine the maximum value of R_2. As an example, for analog input equipment with a 10 MΩ input impedance, an R_2 of less than 10 kΩ is satisfactory. The impedance of the analog input equipment will not have a significant loading effect on the divider.

Copyright ASME International
Provided by IHS under license with ASME
No reproduction or networking permitted without license from IHS

Not for Resale

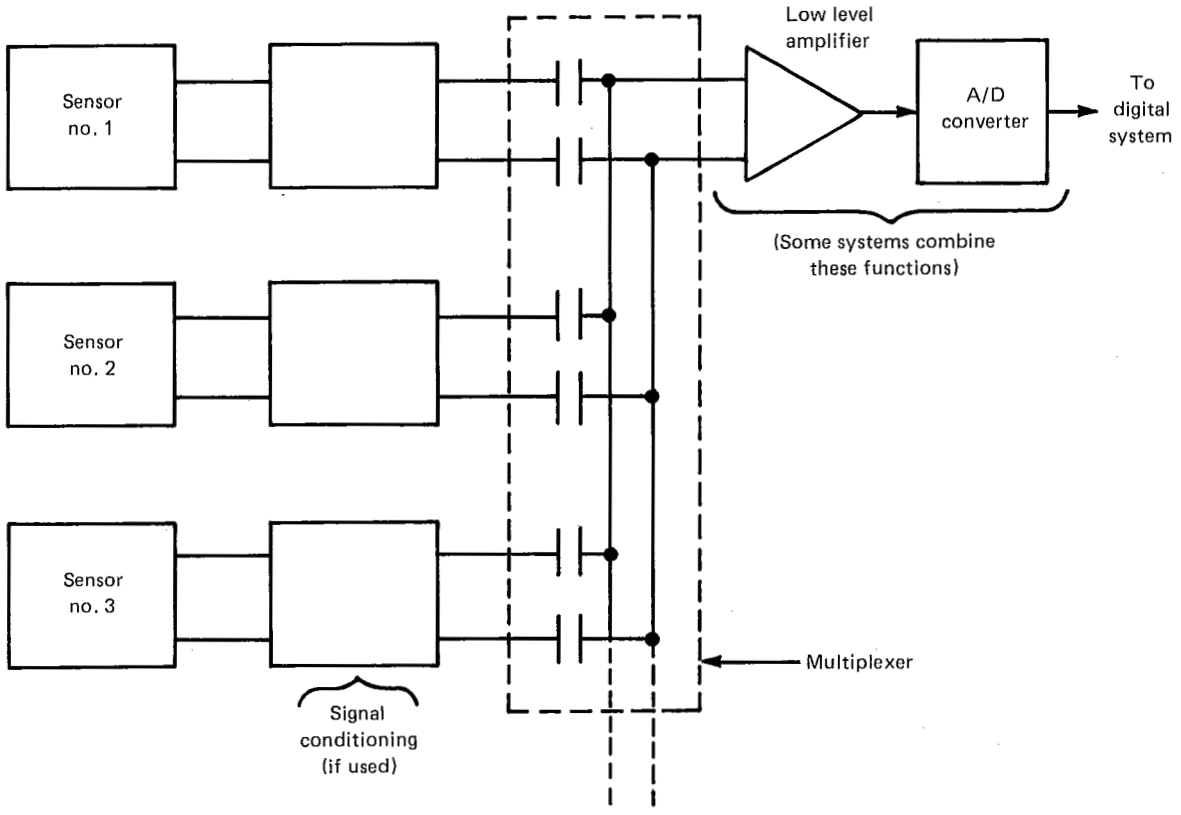

FIG. 5.1 BASIC ELEMENTS OF SENSOR SIGNAL CONVERSION
(Not Necessarily in the Sequence Shown.)

Copyright ASME International
Provided by IHS under license with ASME
No reproduction or networking permitted without license from IHS

Not for Resale

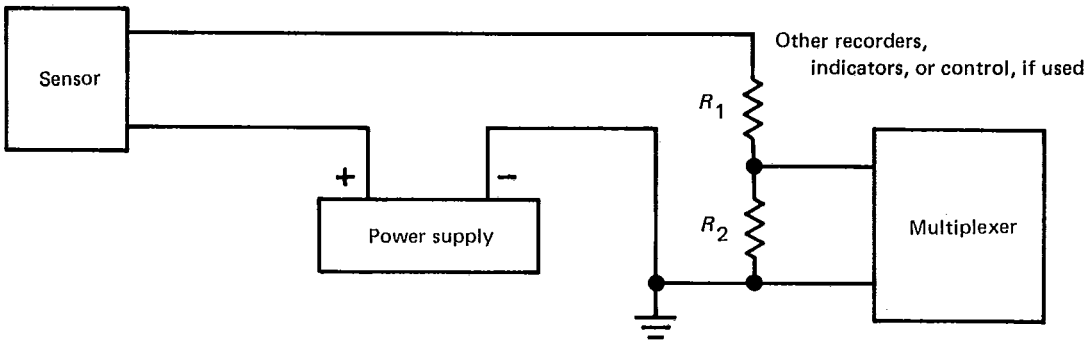

FIG. 5.2 CURRENT TO VOLTAGE SIGNAL CONDITIONING

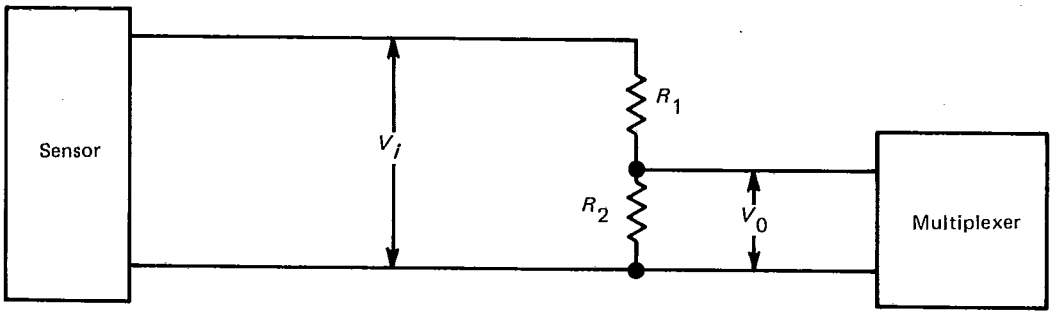

FIG. 5.3 VOLTAGE DIVIDER SIGNAL CONDITIONING

Copyright ASME International
Provided by IHS under license with ASME
No reproduction or networking permitted without license from IHS

Not for Resale

5.1.3 Resistance Temperature Detector (RTD)

5.1.3.1 Number of Lead Wires. The decision as to which method should be used to measure the resistance of an RTD is dependent upon the accuracy required, the sensor's nominal resistance, the resistance of the lead wires and, to a much lesser degree, the leakage resistance of the associated insulation.

RTD bridges are usually furnished as part of the digital system. The selection of the bridge type should be in accordance with the accuracy requirements of the appropriate ASME Performance Test Code and with the guidance of PTC 19.3.

5.1.3.2 Circuit Type. Typical bridge circuits for two, three, and four wire measurements are as shown in Figs. 5.4, 5.5, and 5.6, respectively.

Figure 5.4 shows the classic Wheatstone bridge in a two wire configuration. This circuit does not discriminate or account for lead wire resistance; therefore, the two wire method yields less accurate measurements and is generally not used.

Figure 5.5 shows a typical three wire circuit which, if calibrated as follows, will compensate for lead length but not the error due to lead wire temperature changes.

Two potentiometers are included in the bridge circuit of the RTD's signal conditioning to compensate for circuit variations (cable resistance, etc.). Potentiometer R_1 is used to calibrate the bridge output E_o to a null when a test resistor is substituted at the RTD location. The resulting effect is to compensate for the R_b and R_a leg resistance differences. The test resistor is then replaced with the RTD element. Potentiometer R_2 is adjusted to compensate for line resistance R_c and power supply variations so that the E_o output is adjusted to the desired full-scale value.

To eliminate the lead wire resistance error effect without having to calibrate as above, it is necessary to provide electrical connection to the ends of the RTD by the use of a four wire bridge circuit (modified Wheatstone or Kelvin bridge) as shown in Fig. 5.6. This is especially advantageous in nonpermanent test systems where maximum accuracy and/or various lead lengths are routinely utilized.

For RTD connections it is important to use single cables of the necessary number of conductors to assure equal, known length of all lead wires.

With repetitive automatic measurements in digital systems, no practical means of balancing a bridge prior to each conversion is available. Therefore, it is necessary to consider the effect of unbalanced bridges on the RTD, i.e., variable current flow and thus variable self heating which introduces RTD specific calibration complications.

The above bridge discussion assumes that the bridge and thus the RTD are excited via a constant voltage DC power supply.

The problem of variable self heating is eliminated by the constant current method (four wire). A typical circuit is shown in Fig. 5.7.

The advantages of this method are that:

(a) the current flow through the RTD is constant and thus RTD heating variation is significantly reduced, and

(b) relationship between the measured voltage and the RTD resistance is a direct Ohm's law function without consideration of bridge ratios, etc.

The constant current method assumes the use of a high impedance voltage measurement device.

5.1.3.3 Power Supplies. It should be noted that with constant voltage or constant current, accuracy and precision are a function of the degree of stability or regulation of the power supplies. Serious consideration should be given to power supplies when selecting a test system to meet specific accuracy specifications. Monitoring of power supply stability as a separate voltage input during testing is preferred where possible.

5.1.3.4 Shared or Dedicated Signal Conditioning. Dedicated or shared circuits may be selected for RTD circuits. Dedicated circuits are permanently connected and located ahead of the multiplexer and provide greater flexibility and reliability; however, calibration and maintenance effort is greater. Dedicated circuits are required if different material types of RTDs are used (copper, nickel, platinum, etc.) or different operating ranges are anticipated.

Shared bridge circuits located after the multiplexer reduce the number of bridges required and reduce the calibration and maintenance effort and system complexity. The accuracy effect of RTD heating is negligible when the bridge circuit is switched. However, since a single bridge is used, the loss of the bridge will result in the loss of all RTD readings.

Typical test systems utilize dedicated bridge circuits with constant voltage systems and shared circuits with constant current systems.

5.1.3.5 Circuit Grounding Practice. RTDs can be grounded or ungrounded. External constraints such as safety from high voltage and the electrical nature of the RTD location (insulated generator bearings or motor windings) influence the selection of the RTD grounding practice. If winding RTDs are operated ungrounded, a protective device should be utilized for personnel safety.

Copyright ASME International
Provided by IHS under license with ASME
No reproduction or networking permitted without license from IHS

Not for Resale

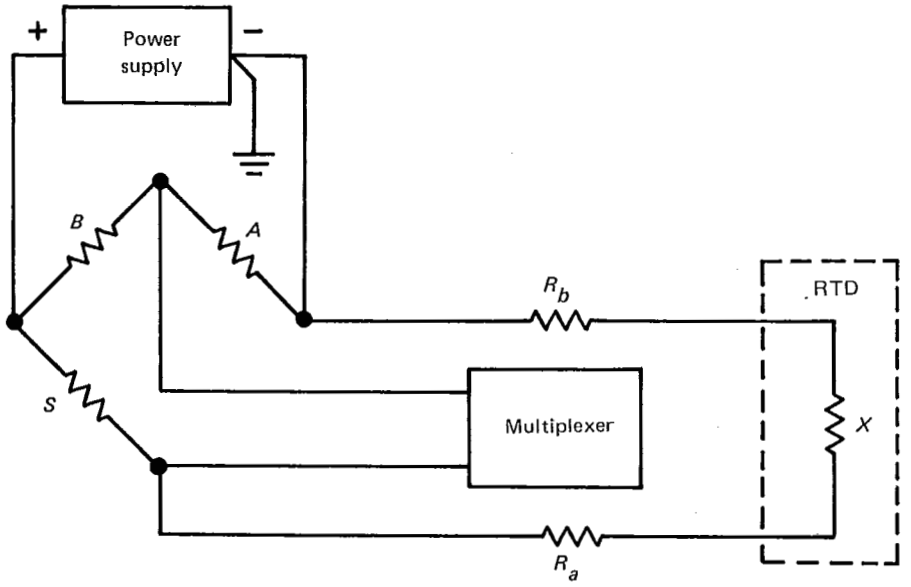

FIG. 5.4 TWO WIRE RTD CIRCUIT

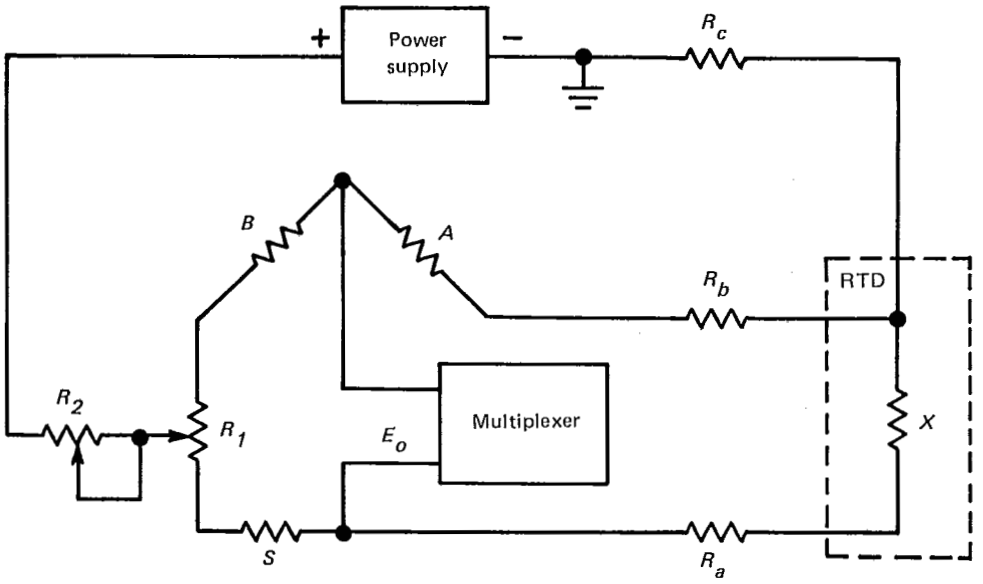

FIG. 5.5 THREE WIRE RTD CIRCUIT

Copyright ASME International
Provided by IHS under license with ASME
No reproduction or networking permitted without license from IHS

Not for Resale

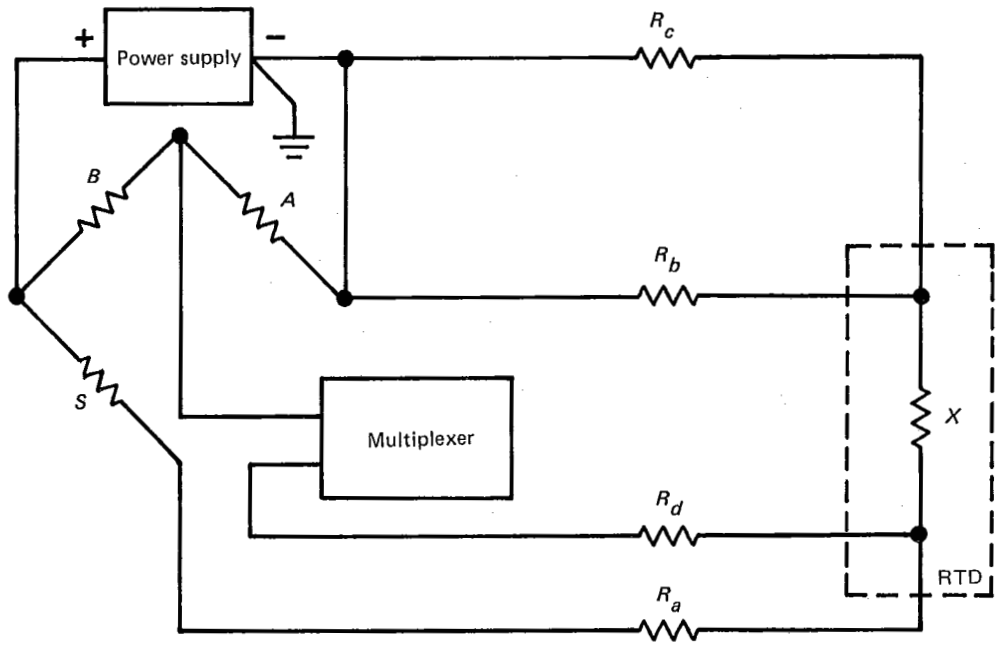

FIG. 5.6 FOUR WIRE RTD CIRCUIT

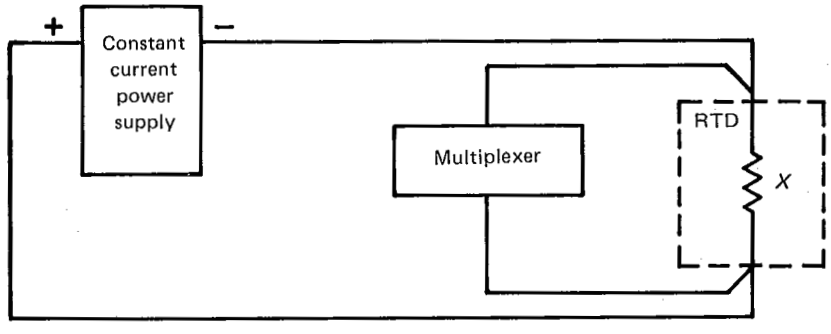

FIG. 5.7 CONSTANT CURRENT FOUR WIRE RTD CIRCUIT

Copyright ASME International
Provided by IHS under license with ASME
No reproduction or networking permitted without license from IHS

Not for Resale

Not grounding the RTD and connecting the negative side of the power supply to the analog equipment ground is the preferred practice. Grounded and ungrounded RTDs should not be connected to the same power supply to avoid ground loops.

5.1.4 AC to DC Conversion. Low level AC signals (10 V or less) can be converted to DC by providing a simple rectifying and filter circuit as part of the signal conditioning equipment. The circuit consists of a bridge or a half-wave rectifier with a filter capacitor and a resistor divider. The RC combination should be chosen large enough to provide filtering of the AC component and yet small enough that it will not increase the time constant of the input signal. The divider reduces the voltage to be compatible with the analog input equipment.

Since the AC signal source is probably a high power circuit relative to typical signal sources and may introduce common mode voltage, caution should be exercised when this method is employed. The bridge rectifier method is relatively imprecise due to the forward voltage drop of the diodes. If it is necessary to compensate for this diode voltage drop, it can be done with software.

Typical test systems, however, do not employ the above described method. The recommended method employs an isolating AC to DC transducer located at the AC signal source. Thus, only the DC signal is transmitted to the analog input equipment and any common mode voltages are eliminated. A typical circuit is shown in Fig. 5.8.

5.1.5 Thermocouple Reference Junction Compensation. A thermocouple consists of a junction of two dissimilar metals, such as iron and constantan, located at the point of measurement. The thermocouple is connected to a reference junction which is used as the connection point to the digital system. For highest accuracy, the wiring between the thermocouples and the reference junction should be continuous. Common practice is to use a thermocouple (see Fig. 5.9) with thermocouple extension wire of the same material. The reference junction is used as the transition point between the thermocouple extension wire and the copper wire used in the digital system.

Since the temperature of the reference junction affects the developed thermoelectric potential, the reference junction temperature must be either a known constant or measured. This is commonly referred to as *reference junction compensation.*

There are basically two methods of establishing the reference junction compensation. The first is to keep the reference junction at a known temperature and then use a constant EMF offset which is a function of reference junction temperature. The second is to let the temperature of the reference junction vary with the ambient temperature, then measure the reference junction temperature and calculate an EMF compensation offset at the time the reading is taken.

For most medium or large digital systems, the second method or minor variations of it are employed. The reference junction termination points are enclosed in a temperature stable enclosure, and the digital system periodically measures the temperature of the enclosure and calculates (software) a compensation voltage. The first method has been used on some systems where the junction is in a thermostatically controlled chamber and maintained at a constant temperature which is always above ambient, but fixed.

Another variation of the first method is to use an ice-water bath or equivalent as a reference junction environment. This method does not use a temperature sensing device to control the reference junction temperature but maintains the state of both water and ice at 0°C. This method is usually used on portable systems.

Careful attention must be given to the thermocouple extension wire size, length of run, and A/D converter impedance specifications when selecting the thermocouple material. For long runs of thermocouple extension wire, the loop impedance and unbalance may be excessive.

5.1.6 Analog Input Filtering. Filtering reduces electrical and process noise that exists in an industrial environment. Electrical noise cannot be completely eliminated by proper cabling practices. Generally this is electromagnetic noise at the system power frequency and also capacity-coupled spikes caused by solenoid operation or other sources. Analog filtering is frequently included as part of the digital system. Care should be exercised to assure that the filter characteristics are compatible with the accuracy and frequency attenuation desired. Two types of hardware filters are discussed: passive (para. 5.1.6.1) and active (para. 5.1.6.2). (For software filtering, see para. 9.3.1.4.)

5.1.6.1 Passive Filters. Passive filters generally consist of resistance, inductance, and capacitance (RLC) circuits which are designed to remove noise at some base frequency with a band width of frequencies above or below this base.

Copyright ASME International
Provided by IHS under license with ASME
No reproduction or networking permitted without license from IHS

Not for Resale

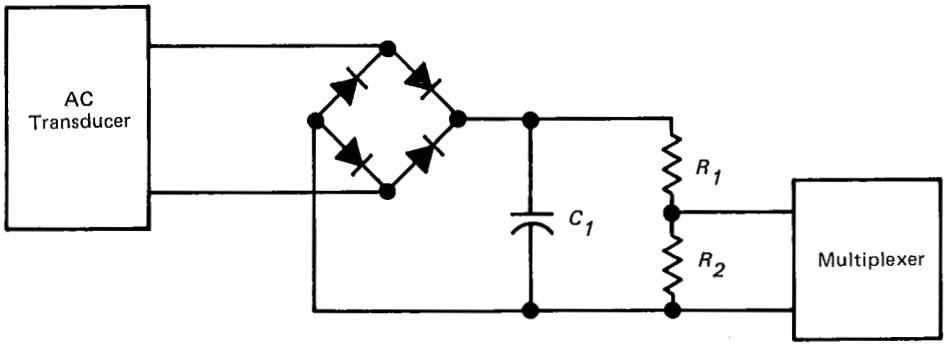

FIG. 5.8 AC TO DC CONVERSION CIRCUIT

For passive circuits consisting of RC or RL, the roll-off or attenuation is 20 dB per decade. For circuits consisting of CL, the roll-off is 40 dB per decade. However, at power line frequencies (60 Hz) the physical size of inductors required is large enough to make them somewhat impractical. Thus, the most common passive filter is an RC filter.

For steady state conditions, the 20 dB per decade roll-off is usually not a problem. For signal measurements taken only at steady state conditions, an RC filter can be used. If the dynamics of the process are important, the characteristic of this type of filter may cause undesirable attenuation at the frequencies of concern. Figure 5.10 shows the attenuation characteristics of filters designed to reduce 60 Hz noise by 60 dB.

The single stage filter is also reducing 0.1 Hz signals by 6 dB. This 0.1 Hz frequency may be in the range of the process variations which are of concern and should not be attenuated. The response characteristics of a two stage filter illustrates that it can be effectively used to eliminate power frequency noise and not attenuate desired process signal frequencies. For high frequency noise, the RC (or LC) is very effective and is usually used.

5.1.6.2 Active Filters. An active filter is a filter network which makes use of gain elements with feedback. Active filters are used only when the roll-off or attenuation associated with passive filters is a problem. Since the filter is active, the roll-off can be designed to approach any desired characteristic and can, if desired, provide amplification of the signal.

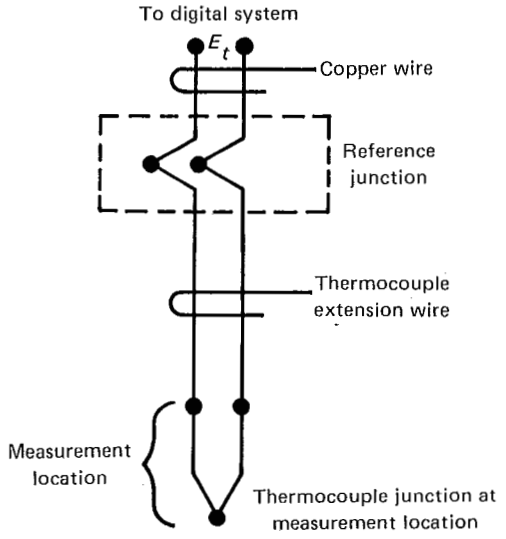

FIG. 5.9 TYPICAL THERMOCOUPLE CIRCUIT

5.1.7 Digital Signal Conditioning. Signal conditioning equipment of the type discussed with analog signals is usually not necessary with digital inputs except for electrical isolation. Typically, the digital input circuit is designed to receive most digital signals without state conversion.

Two basic types of digital signals are:

(a) logic level signals — detect the presence or absence of low voltage (up to 15 V_{DC}) to indicate an on or off (true or false) state. These signals are typically used over short distances to indicate the state of digital system components.

Copyright ASME International
Provided by IHS under license with ASME
No reproduction or networking permitted without license from IHS
Not for Resale

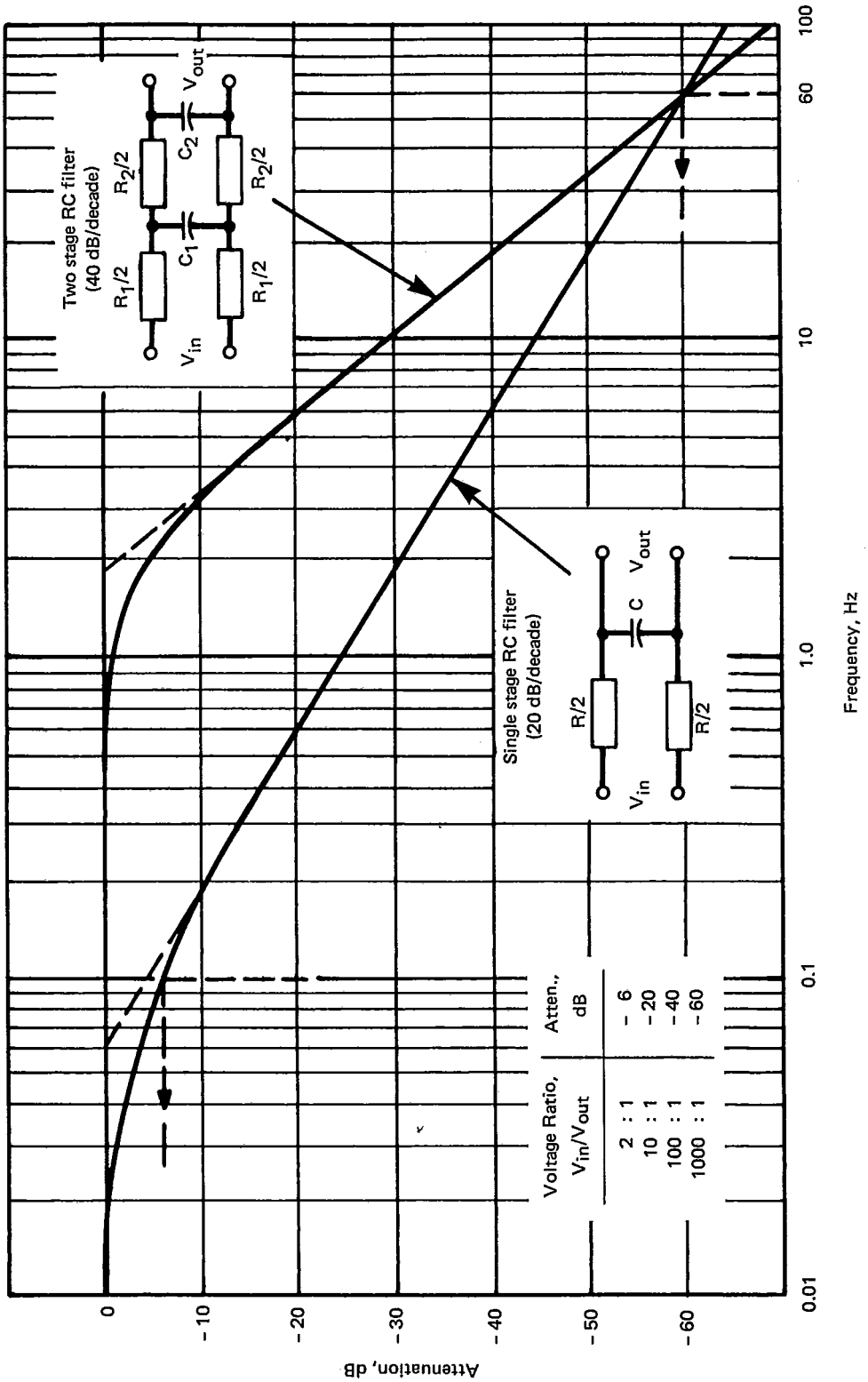

FIG. 5.10 PASSIVE FILTER FREQUENCY RESPONSE CURVE

Not for Resale

Copyright ASME International
Provided by IHS under license with ASME
No reproduction or networking permitted without license from IHS

(b) higher level signals — detect the state of a relay or switch contact (open/closed). Generally these signals are relatively high voltage (up to 125 V_{DC}) to overcome contact resistance and long cable lengths. Digital input filtering (RC) is frequently included as part of the digital system to avoid false detection of contact state change due to noise and contact bounce.

The power supplies for both types are usually furnished as a part of the digital system to avoid grounding problems.

5.2 SIGNAL MULTIPLEXING

A signal multiplexer is any device that selectively connects a number of signals to a common output(s). Multiplexers are used for both analog and digital input signals.

5.2.1 Analog Signal Multiplexing. Analog multiplexers vary in switching speeds from as few as 5 points per second to as many as 20,000 points per second or more. The desirable characteristics of a multiplexer are low contact resistance, low thermal noise, high or infinite resistance when off (or open) to reduce crosstalk, low contact noise, short settling time, and protection against (or immunity to) high overload voltages. Multiplexers have been built with up to six conductors per input point, but two is the most common. Three basic types of analog multiplexers are switches (para. 5.2.1.1), electromechanical relays (para. 5.2.1.2), and solid state (para. 5.2.1.3).

5.2.1.1 Switch Type Multiplexing. This type of multiplexer is defined as any type of mechanical device which can be used to switch signals. These include stepping switches, rotating switches, and crossbar switches. These switches are usually driven by an electrical coil(s) that, in turn, mechanically selects the desired input. Switch type multiplexers usually have gold or silver plated contacts to reduce resistance and thermal noise and to give long contact life.

5.2.1.2 Relay Type Multiplexing. A relay type multiplexer, as contrasted to the mechanical switch type multiplexer, usually has one electrical-mechanical relay for each analog input signal. The relays used are chosen for low contact resistance and low thermal noise characteristics. Some have gold plated contacts sealed in glass to prevent oxidation and are referred to as *Reed relays*.

Another relay type uses a small amount of mercury to wet the contact surfaces for low contact resistance, reliability, and longer life. Relays give excellent point-to-point isolation, which prevents crosstalk between signals, and also have good overload voltage capabilities. They can be randomly addressed. Their switching speeds vary from 10 to 300 points per second depending upon design.

5.2.1.3 Solid State Multiplexing. These are multiplexers that use semiconductor devices to switch the analog input signals. When the devices are turned on, they connect the input signal to be routed to the output. These may be of a discrete or integrated design.

These multiplexers have high switching speeds — 20,000 points per second or higher. Theoretically they have an infinite life. They have a relatively high resistance in the on state and should not be used for low level signal devices, such as thermocouples, without individual amplification for each low level signal. Solid state multiplexers are also more susceptible to failure due to high overload voltages.

5.2.2 Digital Signal Multiplexing. This type of multiplexer is used to select digital input signals. Generally, the digital inputs are selected in groups depending on the hardware considerations. This type is also used to select the outputs of multiple A/D converters. Digital multiplexers utilize solid state switches.

When the digitized output data from an A/D converter is selected by a digital multiplexer, the problems of crosstalk, overvoltage, and threshold voltage levels encountered with solid state analog multiplexers are avoided. The switching speeds are comparable to solid state analog multiplexers.

5.3 AMPLIFIERS FOR LOW LEVEL SIGNALS

Many applications of digital systems with low level input signals require amplification to the input voltage range of the A/D converter(s). The low level signals are commonly in the millivolt range (i.e., 10, 50, 100 mV). A common A/D input range is 0 to 10 V, and amplifiers are frequently required.

Many low level amplifiers are provided with multiple input ranges which are selected by the digital system software to match the input signal range. Generally, an amplifier is associated with each A/D converter as illustrated in Fig. 5.1. Some systems include the low level amplifier function as an integral part of the A/D converter.

The present day low level instrumentation systems are normally of the differential type. Being sensitive only to differential voltage (or voltage difference) at its input terminals, this type of system will inherently minimize common-mode voltages.

Copyright ASME International
Provided by IHS under license with ASME
No reproduction or networking permitted without license from IHS

Not for Resale

5.4 A/D CONVERSION

An A/D converter is any device that converts a voltage to a digital form. Five common electrical types are: counter or ramp type (para. 5.4.1), successive approximation type (para. 5.4.2), dual slope integrating type (para. 5.4.3), voltage to frequency integrating type (para. 5.4.4), and parallel type (para. 5.4.5).

For the purpose of this discussion, *slow speed* A/D converters are defined as those capable of 1 to 5 conversions per second, *medium speed* as 5 to 100 conversions per second, and *high speed* as 100 to 1000 (or higher) conversions per second.

With the advent of integrated circuitry, the A/D converter function is frequently combined into a single chip with analog signal conditioning and amplification. As a result, some applications use an A/D converter chip for each input signal and then multiplex the digital output. This technique reduces the problems of noise and errors in analog multiplexing circuitry, and with parallel A/D converters the effective scan rate can be increased significantly.

For more detailed description of the design, operation, and application of A/D converters, refer to *A User's Handbook of D/A and A/D Converters* by E. R. Hnatek, and *Analog-to-Digital/Digital-to-Analog Conversion Techniques* by D. P. Hoeschele.

5.4.1 Counter or Ramp Type. This type of A/D converter, as illustrated in Fig. 5.11, is one of the simplest. To perform a conversion, this type of converter gates on an internal pulse generator (clock) which produces a series of pulses that are accumulated by a digital counter. As the digital counter accumulates pulses, the output of an internal D/A converter increases and is compared to the input signal voltage. Each clock pulse produces an equal change at the output of the D/A converter. When the D/A converter output is equal to (or slightly larger than) the input signal voltage, the internal comparator changes state which inhibits (gates off) any further clock pulses to the counter. At this time the conversion is complete and the output digital number is stored in the output register of the counter for use by the digital system. This method is also referred to as a *staircase ramp converter*.

This type conversion features simplicity, low cost, and good accuracy, but has the disadvantage of slow speed. Conversion time is proportional to input voltage and frequency of pulse generation and is longest for a full-scale voltage conversion.

5.4.2 Successive Approximation Type. This conversion method is widely used in general practice due to its combination of high resolution and high speed. The successive approximation converter, as illustrated in Fig. 5.12, operates with a fixed conversion time per bit, independent of the value of the analog input. This type of converter operates by comparing an input voltage to the output from an internal D/A converter, one bit at a time. At the start of the conversion cycle, the D/A converter's most significant bit (MSB) is turned on. This generates a feedback voltage from the D/A converter equal to one-half the input full-scale range. If the MSB voltage is larger than the input, it is turned off prior to turning the next bit on. If smaller than the input, it is left on and the next bit is tried. This process of comparison is continued with bit weightings of $1/4$, $1/8$, $1/16$,..., $(1/2)^{N-1}$ until the least significant bit (LSB) is compared, after which the output register contains the complete output data digital number in a binary format.

Both serial and parallel output data can be brought out of this type converter and the converter can be synchronized to an external clock if desired. High speeds, typically 100 nanoseconds per bit, can be achieved using this method. Successive approximation converters can also be quite accurate, but the accuracy depends on the stability of the reference, the switches used to turn on the digital bits, the ladder network of the D/A section, and the internal comparator.

5.4.3 Dual Slope Integrating Type. There are several types of converters using the integrating or ramp principle. The most popular and widely used at the present time is the dual ramp or dual slope type. It is used extensively in digital voltmeters.

The dual slope A/D converter, as illustrated in Fig. 5.13, operates by the indirect method of converting a voltage to a time period which is then converted to a digital number.

Conversion starts with the analog input signal voltage switched to the input of an integrator. It is integrated for a fixed period of time, which is determined by counting clock pulses for a predetermined number of counts. This fixed time period T, in Fig. 5.13, is chosen to equal the period of the power system frequency (or a multiple of it) so that this common source of noise is integrated out. After time T, the integrator input is switched from the analog input signal to a reference voltage which has the opposite polarity of the analog input. At the instant of switching, the integrator output voltage is proportional to the analog input signal and the reference voltage of opposite polarity will cause it to be ramped to zero. Since the reference voltage is constant, the ramp rate (or slope) during the ramping to zero is constant. The time required to ramp to zero is then directly proportional to the analog input signal

Copyright ASME International
Provided by IHS under license with ASME
No reproduction or networking permitted without license from IHS
Not for Resale

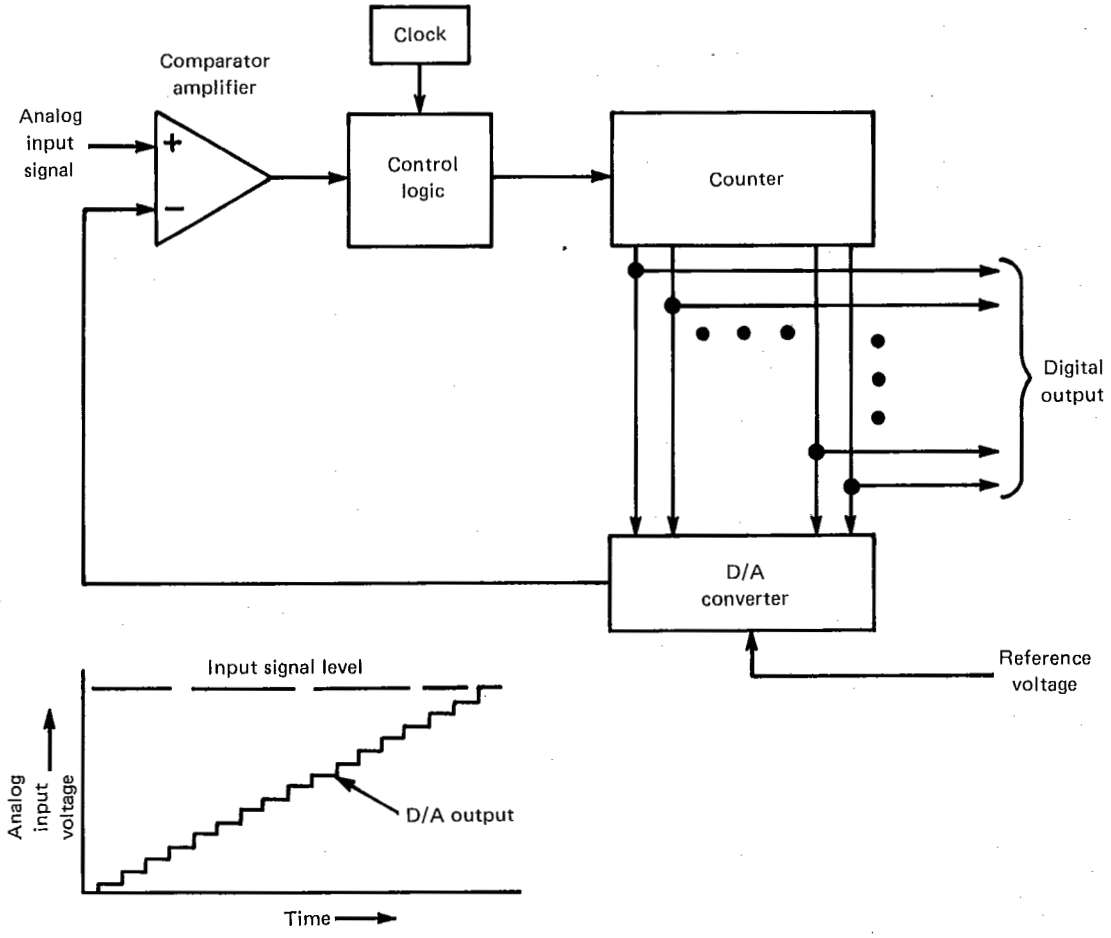

FIG. 5.11 COUNTER COMPARATOR A/D CONVERTER

Copyright ASME International
Provided by IHS under license with ASME
No reproduction or networking permitted without license from IHS

Not for Resale

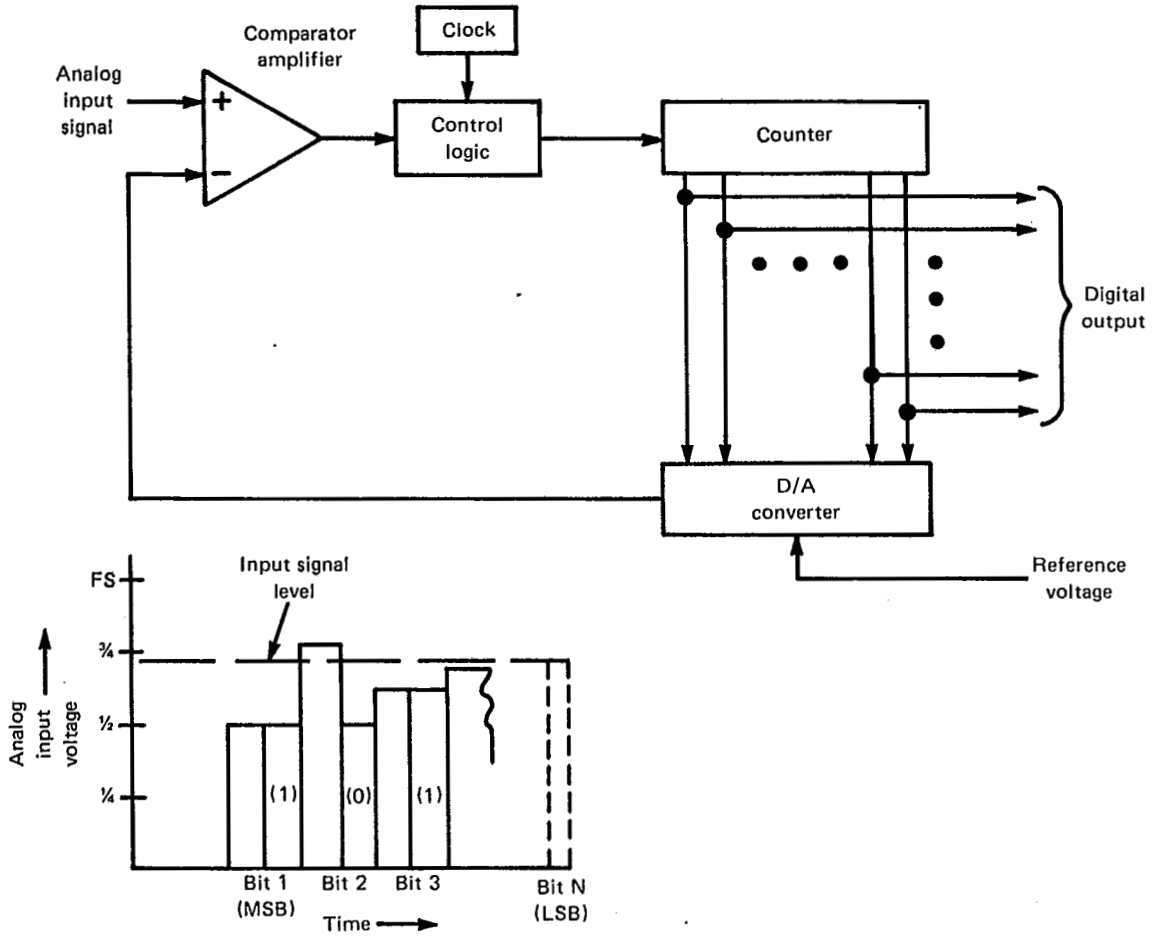

FIG. 5.12 SUCCESSIVE APPROXIMATION A/D CONVERTER

Copyright ASME International
Provided by IHS under license with ASME
No reproduction or networking permitted without license from IHS

Not for Resale

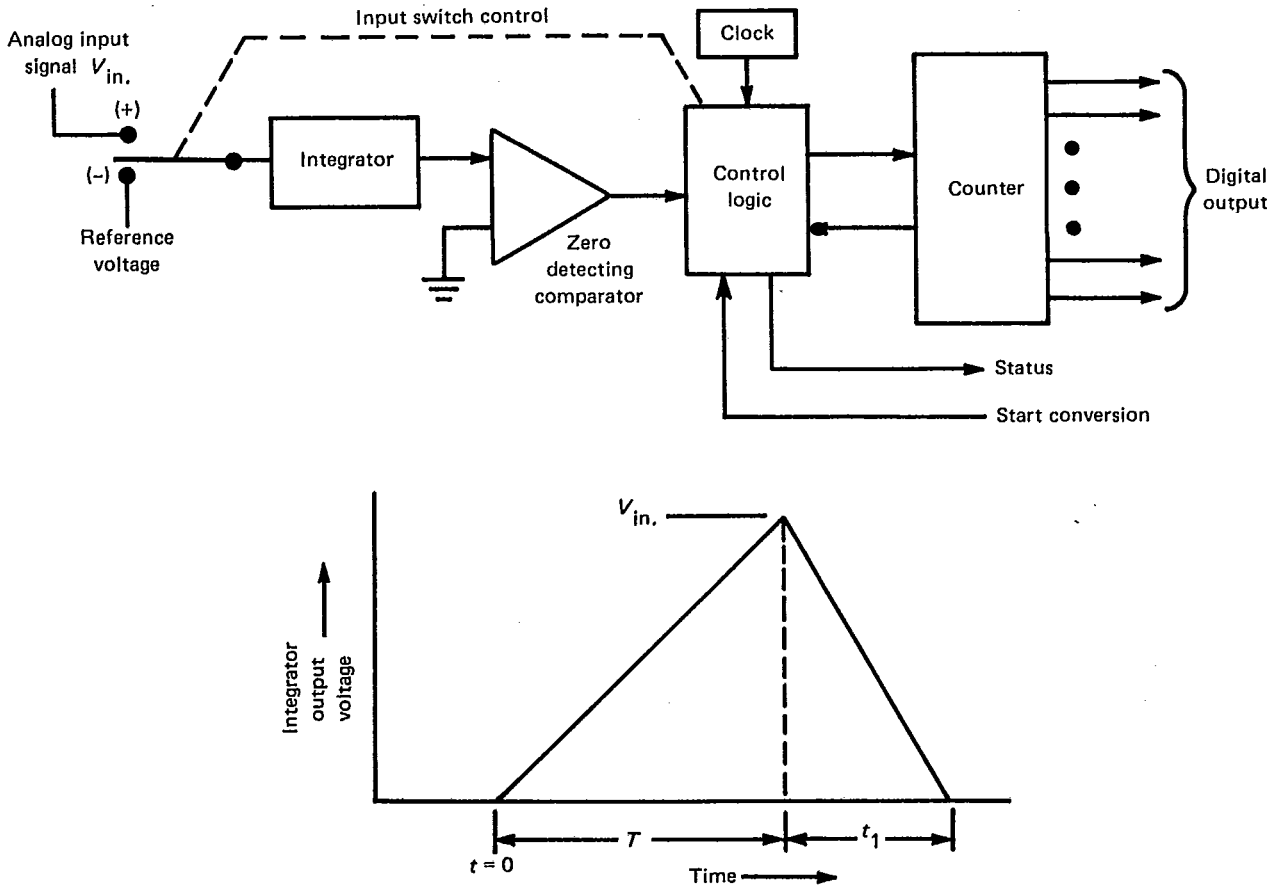

FIG. 5.13 DUAL SLOPE INTEGRATING A/D CONVERTER

Copyright ASME International
Provided by IHS under license with ASME
No reproduction or networking permitted without license from IHS

Not for Resale

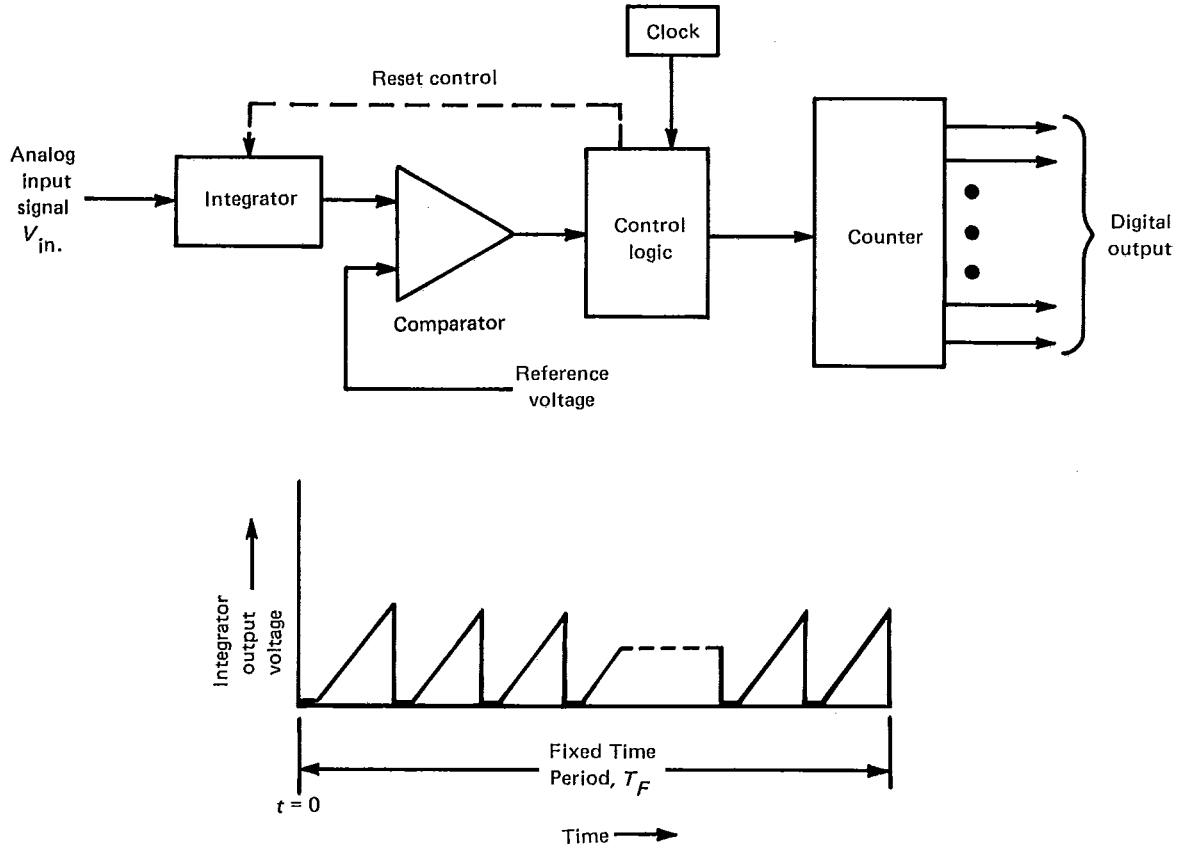

FIG. 5.14 VOLTAGE TO FREQUENCY INTEGRATING A/D CONVERTER

Copyright ASME International
Provided by IHS under license with ASME
No reproduction or networking permitted without license from IHS
Not for Resale

voltage. The digital counter is used to time the fixed time period, is reset at the end of the fixed time period T, and is used to count during the time period t_1. The comparator detects when the integrator reaches zero, and the counting is stopped with the counter containing the digital word representing the analog input. In practice, the input voltage is frequently offset by half of the reference voltage to provide a bipolar converter.

With the dual slope method, the conversion accuracy is independent of the clock frequency and integrator component values as long as they are stable within a conversion period. Therefore, conversion accuracy is dependent only on the accuracy and stability of the voltage reference. Resolution is basically only limited by the analog resolution of the converter. This converter gives excellent noise reduction because of the integration operation. The normal mode noise rejection is infinite when the integration period is equal to a multiple of the period of the interfering noise. In practice, this time is usually a multiple of 60 Hz. The disadvantage of this method is that it is relatively slow, typically 10 to 20 conversions per second.

5.4.4 Voltage to Frequency Integrating Type. The voltage to frequency integrating A/D converter illustrated in Fig. 5.14 consists of an integrator, comparator, and a counter. An analog input signal voltage is applied to the input of the integrator. The integrator output integrates up to a predetermined voltage level, which causes the comparator to change state. The control logic then resets the integrator and the process is repeated for a fixed period of time. The number of integration cycles (or pulses) during this fixed period of time is a function of the input voltage and is accumulated in the counter for the digital output.

Similar to the dual ramp integrating type, the voltage to frequency type has excellent noise rejection because the integration period is chosen to reject a multiple of 60 Hz.

Typical of integrating type A/D converters, the voltage to frequency type provides high resolution. The conversion speed is relatively slow (10 to 20 conversions per second). Since short term drift of the clock frequency, integrator components, or reference voltage will affect accuracy, care must be exercised in selecting these components.

5.4.5 Parallel Type. While the successive approximation converter is capable of speeds as high as 100 nanoseconds per bit, giving conversion rates of 1 MHz for 10 bits, significantly faster conversion may be achieved using the parallel technique. This method is sometimes referred to as the *simultaneous technique* and is capable of 25 MHz conversion rates for each 4 bits. The parallel method has the advantage of the fastest speed, but is limited to a relatively few bits, usually about 4, due to the large number of comparators required. To convert a large number of bits, it is necessary to employ a hybrid technique whereby a parallel conversion stage is followed by a fast D/A converter, the output of which is subtracted from the input voltage, the difference amplified and then converted using another parallel stage. This results in a speed compromise but high resolution.

Copyright ASME International
Provided by IHS under license with ASME
No reproduction or networking permitted without license from IHS

Not for Resale

SECTION 6 — SYSTEM ERRORS

Although human errors in the observation, interpretation, and recording of test data are eliminated when using digital systems, a certain degree of uncertainty still exists due to other sources of error, such as electrical noise as discussed below, A/D conversion as discussed in para. 5.4, and pulse accumulation as discussed in para. 8.2.3. These errors may be reduced to a minimum by following the guidelines given here and in Sections 5 and 8 but will never be completely eliminated. Hence, their effects on the final test results must be analyzed and carefully evaluated (see PTC 19.1).

When estimating the magnitude of the uncertainty or possible error in the test data collected, it is important to distinguish between two general classes of measurement errors: random (para. 6.1) and systematic (para. 6.2).

6.1 RANDOM ERRORS

Random errors are those which occur by chance and whose magnitude fluctuates in a manner that cannot be predicted from a knowledge of measuring systems and the conditions of measurement. These errors are caused by a multitude of contributing factors which are acting in a completely random fashion. It must be borne in mind that statistical analysis or the laws of probability are applicable only to random types of errors. One distinct advantage in using a digital system is its ability to perform extensive statistical calculations during and after the data collection process.

6.1.1 Electrical Noise Sources. The signal by which information is transferred is either an analog quantity (voltage, current, etc.) or a digital quantity (on/off conditions, pulse trains, etc.). The information carried by signals in a circuit generally becomes somewhat distorted during transfer. The difference between the signals as received and as transmitted is called *noise*.

6.1.1.1 Normal Mode Noise. Normal mode noise appears as a voltage difference between the two signal wires and can be caused by:

(a) electrostatic induction in signal wires with unequally distributed capacitance to ground and/or electrostatic noise-producing conductors;

(b) electromagnetic induction in signal wires linked unequally with the disturbing magnetic field or by conductor movement;

(c) junction or thermal potentials due to improper connections;

(d) conversion of common mode to normal mode noise (see para. 6.1.9.2).

6.1.1.2 Common Mode Noise. Common mode noise appears equally between each input signal wire and ground and can be caused by incorrect signal ground location and/or by multiple shield grounds. Where common mode is known to exist (such as in a generator field winding) and is of an appreciable magnitude, it should be eliminated by an isolation device.

Common mode noise can also be caused by electromagnetic or electrostatic induction into the signal wires.

6.1.1.3 Crosstalk Noise. When transmitting either pulsating DC signals or AC signals on any pair or pairs in a multipair cable, there is a tendency for the signal(s) to induce a corresponding signal into adjacent pairs which will appear as common or normal mode noise.

6.1.2 Electrical Noise Prevention. Noise sources described above can be minimized by good cabling practice as discussed in the following paragraphs.

6.1.2.1 Electrostatic Shielding. Electrostatic shielding is useful in avoiding capacitively coupled noise. Properly applied, its function is to decrease the effective capacitance from conductors inside the shield to conductors outside. To assure this, the shield should be continuous.

Copyright ASME International
Provided by IHS under license with ASME
No reproduction or networking permitted without license from IHS

Not for Resale

A woven metal braid shield around the signal wires can be used. A braided surface coverage of 85% is common. Another common method utilizes a lapped metal foil or metallized tape shield with a low resistance drain wire. This provides better shielding properties and lower leakage capacity. The drain wire is recommended with the foil type shield, since the foil alone is difficult to terminate.

These types of shields minimize electrostatically induced noise. However, the usual cable shielding materials (i.e., copper braid or aluminized mylar) do not provide electromagnetic shielding at power line frequencies (60 Hz, 50 Hz, or 25 Hz). (See para. 6.1.2.2.)

Multiple pairs may be grouped within a single shield where capacitive coupling between them is not a factor. For instance, a number of low level analog input signals (twisted pairs) having similar common mode voltage may be grouped within a common shield. A group of contact outputs can also be placed within its own common shield. However, the grouping of some low and high level analog inputs within a single shield should be avoided. High and low level analog inputs or analog inputs of appreciably different common mode potential should not be grouped within a single shield without careful study of the particular application. If multipair cable is used, it will not be possible to extend the shield up to the terminals of individual pairs. The signal wires must be isolated from other wiring in the termination area if multipair cable with a single shield is used.

Where experience dictates that crosstalk noise may be a problem, it is recommended that each signal pair be individually shielded and grounded.

The cable shield must be electrically continuous. When two lengths of shielded cable are connected together at a terminal block, a separate point on the terminal block shall be used for connecting the shields. The shield of each cable in a junction box should be insulated to prevent unintended grounds of the shield.

6.1.2.2 Electromagnetic Shielding. An effective shield against electromagnetic noise requires complete coverage by a ferrous material of low reluctance and considerable thickness.

Rigid steel conduit could possibly qualify as an electromagnetic shield because of the complete coverage and thickness. However, the steels used in rigid conduit as well as in cabinets are not normally of sufficiently low reluctance to be very effective in electromagnetic shielding at low (power line) frequency. When using rigid steel conduit, additional noise reduction can be obtained simply by locating the conduit away from sources of electromagnetic radiation. In practice, twisting of signal pairs, physical separation from disturbing AC power lines and equipment, and to some extent the limited shielding effect of steel tray or conduit are usually depended upon to provide the necessary protection against electromagnetic pickup.

6.1.2.3 Grounding of Signal Circuits and Shields. A ground potential difference usually exists between different locations in a plant. A current will flow in the cable shield as a result of this potential difference if the shield is grounded at more than one location. The shield current can introduce a common mode noise by electrostatic coupling to the two signal wires. To avoid multiple grounding of the shield, an overall insulating jacket must be specified on shielded cable (see para. 6.1.3.2).

A metallic conduit would seem to be an ideal electrostatic shield. It is not, however, because of the current flowing in the conduit from the multiple points at which the conduit is connected to grounded building steel and equipment. Since it is impractical to insulate metallic conduits from ground, an insulated cable shield is recommended for protection against electrostatic noise, even when a metallic conduit is used.

While recognizing that some sensors cannot be grounded, the basic rules to be observed for grounding signal circuits and instrumentation cable shields are as follows.

(a) Digital input (contact status) signal wires should not be grounded at any point external to the power supply ground.

(b) All instrumentation cable shields should be grounded and not left floating.

(c) Each instrumentation cable shield must be grounded at only one point. This will prevent the shield from carrying currents that would otherwise result if two points or both ends are tied to ground at different ground potentials.

(d) Each RTD system consisting of one power supply and one or more RTDs should be grounded at one point for shielding considerations and at more points if required for safety. To avoid ground loops, all signal grounds for a particular power supply should be in the same approximate plant location. This ground point may be either at the power supply or at or near the equipment containing the RTDs (see para. 5.1.3.5).

(e) RTDs embedded in windings of medium and high voltage transformers and rotating machines are usually grounded at the RTD location. For personnel and equipment protection, this practice requires special attention (see para. 5.1.3.5).

Copyright ASME International
Provided by IHS under license with ASME
No reproduction or networking permitted without license from IHS

Not for Resale

(f) The low or negative potential of low level transmitter signal pairs is usually connected to ground and at the same point where the shield is grounded.

(g) In cases of a common power supply, such as a group of milliampere transmitters, both the low side of the signal pair and the shield are tied to ground at the power supply.

(h) In general, the shields on grounded as well as ungrounded thermocouples should be grounded at or near the thermocouple well. Grounding the shield at only one correctly selected point eliminates charging currents that may flow in the shield due to differences in potential between signal and shield ground locations. If the shield is grounded at more than one point, differences in ground potential will drive current through the shield.

Further guidance is offered in IEEE Standard 422, Guide for the Design and Installation of Cable Systems in Power Generating Stations.

6.1.2.4 Digital System Grounding. The overall successful performance of a digital system is dependent on a relatively noise-free signal transmission installation. The following guidelines should be followed in grounding digital systems.

(a) All digital system cabinets should be insulated from plant structural steel, tied together, and connected to the plant ground grid at a single point.

(b) All electrical raceways to the digital system must have a gap or an insulated joint near the system input termination to prevent multiple ground paths.

(c) The digital system ground bus is to be connected to the plant ground grid as close to earth ground as practical to minimize noise pickup.

See IEEE Standard 518, Installation of Electrical Equipment to Minimize Electrical Noise Input to Controllers from External Sources.

6.1.3 Cabling Practice. While all possible precautions must be taken to minimize the development of both common and normal mode noise, it is best to arrange the field circuits (signal loops) so that any remaining noise pickup will appear equally and in phase (common mode) on both sides of the signal pair.

Twisting of the leads of a signal pair, since the leads are alternately and closely transposed in position, will effectively present each lead equally to the same disturbing electromagnetic field intensity. Therefore, identical noise voltage (common mode) will be induced in each lead to ground. Twisting the pair of leads does not reduce the induced voltage, but it does make it nearly identical in each lead so that the voltage difference (normal mode noise) will be a minimum between the leads.

6.1.3.1 Line Loss and Cable Length. This subject cannot be dealt with independently from consideration of sensor and/or transducer and/or receiver type. Historically, most electrical signals were initially of the voltage type. The need to transmit increasingly lower level signals (millivolt) over longer distances with the least expensive cable (wire size) without significantly degrading their signal value necessitated closer attention to the subject of line loss. This resulted in the use of increasingly higher impedance receiving circuits and the advent of current type transducers.

If low input impedance devices are used, then cable length limitations resulting from line loss must be calculated for voltage type signals by an Ohm's law analysis of cable and receiving circuit impedance. This will determine whether the resulting line loss is acceptable in terms of percent signal error.

There is no error due to line loss on current type signals. However, cable length (cable impedance) is limited by the maximum permissible loop impedance (cable and receiving circuit) that the current transducer can overcome.

6.1.3.2 Cable Types. Detailed cable design and specification are beyond the intended scope of this Supplement. However, basic considerations in selecting cable should include the following:

(a) number of circuits per location;

(b) number of conductors per cable;

(c) wire size (see line loss and cable length, para. 6.1.3.1);

(d) insulation specification relative to voltage level, fire retardation, toxic emissions if heated, and resistance to chemical attack;

(e) need for electrostatic shield;

(f) need for electromagnetic shield;

(g) route should be considered when designing mechanical protection (indoors, outdoors, in tray, in conduit, suspension span, wind and weather);

(h) flexibility specification depends on whether intended usage is for permanent installation or for portable testing.

6.1.3.3 Cable Installation. Basic considerations in cable installation should include the following:

(a) physical protection;

(b) physical separation from noise sources;

(c) separate cable trays and conduits for signal cable;

(d) pulling practice, i.e., stress, lubrication damage, etc.

Copyright ASME International
Provided by IHS under license with ASME
No reproduction or networking permitted without license from IHS

Not for Resale

6.2 SYSTEMATIC ERRORS

Systematic errors are those which are consistently repeated with repetition of the test. Examples are errors resulting from faulty calibration of the measuring system or errors due to a change in the system that will cause its indication to depart consistently from its calibration value. Errors of this type are very difficult to evaluate. Their presence must be minimized by proper calibration of the entire digital system, including all sensors, before conducting a test. (See Sections 7 and 10 for further aspects of calibration of digital systems.)

6.3 TOLERANCES AND LIMITS OF ERROR

Allowance for testing inaccuracies are outside the scope of this Supplement. Refer to para. 1 of PTC 1 for the subject of tolerances and limits of error.

6.4 SYSTEM ACCURACY

The definition of system accuracy for the analog input section of a digital system involves consideration of the accuracies of the components which make up the analog input section and the consolidation of these individual accuracies into an expected overall or system accuracy. This subject is covered in considerable detail in the ISA Recommended Practice 55.1, Hardware Testing of Digital Process Computers.

The elements of concern include the errors introduced by:

(a) the signal conditioning (RTD bridges, attenuators, etc.)
(b) noise and common mode rejection
(c) crosstalk
(d) offset voltage
(e) gain error, including linearity (for all available ranges)
(f) A/D converter resolution
(g) temperature coefficients
(h) long term drift
(i) amplifier bias current effects
(j) thermocouple reference junction temperature
(k) power supply voltage variations

It should be recognized that all of these elements do not apply to all digital systems and that certain systems may have additional effects to be considered.

Many digital systems include automatic measurement and correction of some of these elements. A common example is the zero offset voltage which can be automatically determined by periodically scanning a shorted input to determine the actual offset. Similarly, the amplifier gain can be determined by periodically scanning a reference voltage input(s) to obtain the actual gain. This could be done for one or more ranges of amplifier gain. The analog input accuracy should be attainable at the maximum system analog scan rate when inputs are scanned on a random basis as is the case with the normal operation of a digital system. It should be noted that when a single point is scanned repetitively, the maximum scan rate (for the specified analog input system accuracy) is generally lower than for random scanning. This is due to the settling time needed for the multiplexer relays and/or terminating circuits with filters and to thermal noise in the multiplexer relays.

6.4.1 Uncertainty Analysis. System uncertainty can be calculated in many ways. One method is to take the worst case error. This method involves the simple algebraic summation of the errors for each of the analog system elements. Another method which is more realistic is to calculate the probable error as the square root of the sum of the squares of the individual element errors. As an example, an analog input system whose component errors are:

(a) ±0.02504% FR
(b) ±0.00138% FR
(c) ±0.0225% FR

would have a worst case error of ±0.04892% FR (0.02504 + 0.00138 + 0.0225), whereas the probable total error would be ±0.0336% FR:

$$\text{Probable error} = [(0.02504)^2 + (0.00138)^2 + (0.0225)^2]^{1/2} = \pm 0.0336\%$$

See Appendix C for examples of overall system error analysis.

Copyright ASME International
Provided by IHS under license with ASME
No reproduction or networking permitted without license from IHS

Not for Resale

SECTION 7 — CALIBRATION

7.1 SYSTEM CALIBRATION METHODS

Overall, in-place calibration of the digital system, from the sensor to the engineering unit conversion, is recommended. Initial calibration should begin with alignment of the individual system elements and input sensors to their respective specifications. Subsequent calibrations should be performed by impressing a known process input on the sensor which is accurately measured with a standard. Agreement between the standard and the digital system output device provides a successful calibration at each point. This procedure should be repeated at as many points over the operating range of the sensor as required. The results of each calibration may be stored in the digital system and used for each point conversion to engineering unit values. This method provides the best overall accuracy for the measuring point value. See Appendix C for further details.

7.1.1 Intermediate Value Checking. The ultimate test in data validation is to impress a known process input on the sensor and to verify the correct value in engineering units from the digital system. It is also desirable to be able to observe the sensor output prior to conversion to engineering units. This aids in isolating problems with the sensor and digital system input section. For example, if the system is indicating an inappropriate digital value in electrical units, the problem is most likely located in the sensor, connecting wiring, signal conditioning, or A/D converter. If the correct value is indicated in electrical units, the problem is most likely in the engineering units conversion software.

7.2 AMBIENT CONSIDERATIONS

In situ calibration of a sensor and conversion to the digital form, under normal test operating ambient conditions, incorporates the ambient effect in the overall calibration.

7.2.1 Nonambient Calibration Correction. If the calibration must be performed at other than operating ambient temperature and the ambient temperature effect is significant, the ambient temperature should be monitored and, if practical, the appropriate correction applied to the data.

7.2.2 Ambient Changes. The sensor should not be located where it might be exposed to ambient temperature changes large enough to affect the calibration. If this condition exists, it may be necessary to enclose and temperature control the enclosure, or measure the temperature of the enclosure and determine the effect of the undesirable temperature change.

7.3 SENSOR CORRECTIONS

Digital systems can accommodate unique calibration and conversion data to be stored and used for each sensor. This capability allows the following:

7.3.1 Rough Sensor Adjustment. Sensor fine tuning to an exact zero or full range signal value is not necessary. Rough adjustment of sensor zero and range followed by an overall system calibration yields the highest accuracy available.

7.3.2 Fluid Head and Fluid Density Corrections. Corrections may be made for physical property changes to an extent not practical before the advent of digital systems. Corrections can be applied via software in the engineering units conversion process to obtain values for each data point. Examples of fluid head corrections include sensor to pressure tap elevation and pressure tap to point-of-interest elevation. Flow measurements obtained from orifices or nozzles require corrections or compensation for the changes in fluid density between the design and operating conditions. Fluid density may be computed from pressure

Copyright ASME International
Provided by IHS under license with ASME
No reproduction or networking permitted without license from IHS

Not for Resale

and temperature data and from fluid property routines. The density correction may be applied so that a flow value in engineering units is available for each data point.

7.3.3 Zero Elevation and Range Compression. Individual sensor conversion equations allow full advantage to be taken of transducer capability of elevating zero and compressing ranges to closely encompass the expected test value range and thus improve sensor sensitivity and resolution.

For example, if an expected static pressure is in the range 2000 ±250 psig, the transducer could be calibrated for a range of 1750 psig to 2250 psig.

7.3.4 Subsequent Calibration by Software. Where possible, calibration adjustments after initial calibration should not be performed on the sensor itself. The calibration corrections should be incorporated into the overall system calibration via software if possible. This procedure is recommended to avoid problems of thermally, mechanically, or electrically disturbing the sensor and also allows better tracking of sensor drift with time.

Copyright ASME International
Provided by IHS under license with ASME
No reproduction or networking permitted without license from IHS

Not for Resale

SECTION 8 — DATA SUFFICIENCY

8.1 INTRODUCTION

The ASME Performance Test Codes specify the criteria which must be met to obtain data of sufficient quantity and quality to meet the ASME Performance Test Code desired accuracy. A digital system can meet these criteria and provide a monitoring function capable of flagging the data, should the criteria be violated.

8.2 DATA SAMPLING

The frequency of data observation is important to meet the criteria for quantity.

8.2.1 Frequency of Data Readings. ASME Performance Test Codes generally recommend minimally acceptable frequency of manual observations of variables during a steady state test run. The use of a digital system may enable a considerable increase in the frequency of observations, thus improving the data representation of the actual condition.

Scan rates of the test variables should be reviewed to ensure that the intent of the ASME Performance Test Code concerning run duration and data sufficiency is met. Guidance on the adequacy of data is given in para. 8.3.7.

8.2.2 Analog Sensor Data Acquisition Precautions. Data which are to be used for calculations and results should be immediately preceded by a scan. Care should be taken that a single scan is used for one observation. For example, a thermocouple that is scanned only once every 30 sec should not have data observations accumulated at 5 sec intervals and then used as valid dynamic test data.

Some digital systems provide the engineering units conversion on an input basis and store the value in the input section until a significant change in the process is detected. Even though a consistent scan interval is established, the value is not updated to the data management programs until a predetermined significant change in the process is detected. Care must be taken to ensure that the significant change value does not degrade the overall accuracy of the measurement value.

8.2.3 Digital Sensor Data Acquisition Precautions. Pulse input signals are often used for electrical power measurements, rotational speed, or other parameters. A digital system uses a counter to accumulate the pulses from the pulse generator. The number of pulses accumulated in a certain time interval is then multiplied by a scale factor to obtain the measurement in engineering units.

When a portion of the test duration is used, care should be exercised to ensure that sufficient pulses are accumulated in a given interval such that the projected quantity for a longer time period does not introduce an error of a magnitude that would destroy the desired test accuracy.

If the pulse rate cannot be increased to accomplish this, a "partial pulse" scheme may be considered. This involves measuring the time interval between the beginning of the accumulation period and the first pulse, and the time interval between the last pulse and the end of the accumulation period (see Fig. 8.1).

8.3 DATA ANALYSIS

A digital system with data analysis capability can be used to analyze the data to determine if they met the criteria necessary for the data sampling frequency and consistency. This analysis can be done during the test and be available as soon as the test run is completed. The purpose of such an analysis is to ensure that the selected scan rate is compatible with the sensor response and/or process rates of change. The ASME Performance Test Codes usually do not consider the rates of process changes that occur within the acceptable definition of steady state conditions. Even though the test engineer selects the scan rate based upon the data collection requirements, he must also be aware of the compatibility of the scan rate with the changes in the

Copyright ASME International
Provided by IHS under license with ASME
No reproduction or networking permitted without license from IHS

Not for Resale

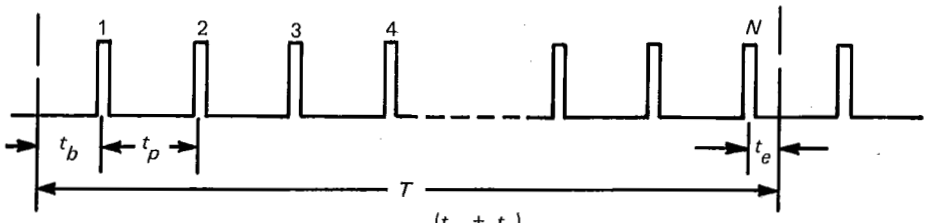

$$P_c = P - 1 + \frac{(t_b + t_e)}{t_p}$$

where

T = time period for pulse accumulation

t_p = elapsed time between two pulses (avg)

P = number of pulses during time period

P_c = corrected number of pulses during time period T

t_b = time interval, measured by digital system timer, between beginning of time period T and first pulse

t_e = time interval between last pulse and end of time period T

FIG. 8.1 PARTIAL PULSE CALCULATION

process. For example, a scan rate of 5 sec may be selected for a point where the process cycles with periods of 5 sec. Data collection could occur at the peaks in a synchronized manner and contribute to an unrecognizable system error.

8.3.1 Comparison of Duplicate Measurements. For critical measurements, duplicate sensors may be required to cross-check readings obtained by each sensor. Deviation between the duplicate sensor measurements may be monitored, and if the deviation exceeds a preset amount, the measurements may be flagged for further investigation.

8.3.2 Comparison to Expected Value (Reasonability). For a steady test condition, the value of some of the measurements may be expected to fall within a known range. Should the measured quantity fall out of the expected range, the measurement may be flagged for further investigation.

8.3.3 Duration of Test Runs. The ASME Performance Test Codes generally recommend the minimum duration of a steady state test run. These minimum lengths are dictated by:

(a) the length of time required to obtain accurate process data from the instrumentation;

(b) consideration of the time requirements for personnel to manually read instruments and obtain a sufficient number of readings.

The use of a digital system may significantly shorten the time requirements compared to manual readings, if the process is stable and instrumentation is available that will provide acceptable data in a shorter time period.

8.3.4 Data Sufficiency. Statistical methods may be used to establish the sufficiency of data collected during a test based on an uncertainty limit which is either specified in the ASME Performance Test Codes or mutually agreed upon by all parties involved in a test.

Copyright ASME International
Provided by IHS under license with ASME
No reproduction or networking permitted without license from IHS

Not for Resale

8.3.5 Data Scatter Statistical Analysis. The best measure of dispersion in a set of observations is called the *standard deviation*. This is equal to the root mean square of the deviations of the individual observations from the arithmetic average of the set and may be estimated from the equation

$$S = \left[\frac{\sum_{i=1}^{N} (x_i - \bar{x})^2}{N - 1} \right]^{1/2}$$

$$S = \left[\frac{\sum_{i=1}^{N} x_i^2 - \frac{\left(\sum_{i=1}^{N} x_i \right)^2}{N}}{N - 1} \right]^{1/2}$$

where

S = estimate of standard deviation of individual measurements
x_i = an individual measurement
$\bar{x}$ = arithmetic average
N = number of measurements

8.3.6 Data Rejection Guidance. In a set of test data, it is possible to encounter a value which is noticeably different from the others, and a decision must be made to either use or discard it.

Digital systems may have the capability to check for and indicate hardware and sensor failure and automatically discard any data obtained when such an indication is detected. Examples of hardware failure are A/D overflow and board failure. An open thermocouple is an example of a sensor failure. Digital systems can also perform a sensor reasonability check by comparing a sensor reading against a high and low reasonable limit. Any value outside of this range indicates a problem. Quality identification coding may be provided for each test data to indicate whether it is good, questionable, bad, or an inserted value. The quality of test data may be propagated through all calculations involving that test data. This will serve as an aid in further evaluation of the reliability of the test data and results.

If no hardware failure is indicated, other reasonable explanations must be sought when a test reading is radically different from the others of the set. It is possible that the quantity being measured has changed temporarily, or that there has been significant change in the process conditions of measurement. This can be avoided by maintaining steady state conditions throughout the duration of the test.

Discarding test data arbitrarily just because it appears to be different from the others in the set is not sound practice. Statistical methods may be used. A good criterion is to reject a test datum when its deviation from the mean is greater than a specified $\pm ZS$ where S is the estimated standard deviation and Z is a value which depends on sample size and distribution. For example, for a large number of normally distributed observations, the value of Z is equal to 1.96 at 0.95 level of confidence. This means that if we obtain an observation that deviates from the mean by at least $\pm 1.96S$, the observation is significantly different from the body of the data described by the given normal distribution, and the probability of our being in error is 5%. At 0.99 and 0.999 confidence levels, the values of Z are 2.576 and 3.291, respectively.

References such as PTC 19.1 and textbooks on statistics may be consulted for other techniques used in detecting spurious data points or measurement outliers.

For performance testing, the criteria to be used for discarding spurious test data should be mutually agreed upon by all parties involved. The digital system should keep a record of all questionable data and the reason for discarding them.

8.3.7 Number of Test Readings Required. A method for checking that at least the minimum number of observations has been made to satisfy a specified uncertainty limit is described and illustrated in PTC 6, Steam Turbines. This method is intended to provide adequate guidance when manual data acquisition is used.

For digital systems with computational ability, the following procedure may be programmed to determine the number of test readings required to satisfy a specified uncertainty limit.

(a) Set a predetermined uncertainty limit U_s due to scatter in the data. This value is either specified in the ASME Performance Test Codes or mutually agreed upon by all parties involved in a test.

(b) Estimate on a running basis the standard deviation of individual measurements using the equation shown in para. 8.3.5.

(c) Estimate the standard deviation of the average, $S_{\bar{x}}$

$$S_{\bar{x}} = \frac{S}{\sqrt{N}}$$

(d) Set the influence factor K or C which is a measure of the effect of a particular instrument reading on the final results.

Copyright ASME International
Provided by IHS under license with ASME
No reproduction or networking permitted without license from IHS

Not for Resale

TABLE 8.1
STUDENT *t* DISTRIBUTION

Degrees of Freedom	$t_{90\%}$	$t_{95\%}$	$t_{99\%}$
1	6.314	12.706	63.657
2	2.920	4.303	9.925
3	2.353	3.182	5.841
4	2.132	2.776	4.604
5	2.015	2.571	4.032
6	1.943	2.447	3.707
7	1.895	2.365	3.499
8	1.860	2.306	3.355
9	1.833	2.262	3.250
10	1.812	2.228	3.169
11	1.796	2.201	3.106
12	1.782	2.179	3.055
13	1.771	2.160	3.012
14	1.761	2.145	2.977
15	1.753	2.131	2.947
16	1.746	2.120	2.921
17	1.740	2.110	2.898
18	1.734	2.101	2.878
19	1.729	2.093	2.861
20	1.725	2.086	2.845
21	1.721	2.080	2.831
22	1.717	2.074	2.819
23	1.714	2.069	2.807
24	1.711	2.064	2.797
25	1.708	2.060	2.787
26	1.706	2.056	2.779
27	1.703	2.052	2.771
28	1.701	2.048	2.763
29	1.699	2.045	2.756
30	1.697	2.042	2.750
40	1.684	2.021	2.704
60	1.671	2.000	2.660
120	1.657	1.980	2.618
∞	1.645	1.960	2.576

K = influence factor in % effect per percent of instrument reading

C = influence factor in % effect per unit of instrument reading

Values of K and C must be determined for each type of measurement used in the particular test being conducted. For example, for steam turbine tests, these values are given in PTC 6.

(e) Obtain from Table 8.1 the Student *t* statistical parameter for a given number of degrees of freedom (N-1) and percent confidence level (% CL).

(f) Calculate the uncertainty limit effect U_c on the results for the measurement due to scatter in the data using the equation

$$U_c = K\left[t_{(N\text{-}1,\ \%\ CL)}\, S_{\bar{x}}\right]\left(\frac{100}{\bar{x}}\right) = C\left[t_{(N\text{-}1,\ \%\ CL)}\, S_{\bar{x}}\right]$$

where

U_c = calculated uncertainty limit, percent

$t_{(N\text{-}1,\ \%\ CL)}$ = Student *t* statistical parameter for a given degree(s) of freedom (N-1) and percent confidence level (% CL)

$S_{\bar{x}}$ = standard deviation of the average

$\bar{x}$ = arithmetic mean

$$\bar{x} = \frac{\sum_{i=1}^{N} x_i}{N}$$

(g) Compare U_c in (f) above with the predetermined value of U_s. If U_c is less than or equal to U_s, then sufficient number of readings have been taken to satisfy U_s for the measurement under consideration. If U_c is greater than U_s, then the number of readings available is not sufficient and additional readings must be taken. The number of readings required to satisfy the predetermined value of U_s may be estimated from the following equation:

$$N_R = \left[\frac{100K}{U_s}\, t_{(N\text{-}1,\ \%\ CL)}\, \frac{S}{\bar{x}}\right]^2 = \left[\frac{C}{U_s}\, t_{(N\text{-}1,\ \%\ CL)}\, S\right]^2$$

The above equation must be solved using an iterative procedure since the statistical parameter *t* is also a function of the number of readings. For initialization, the number of readings available may be used. The value of N_R should be rounded off and expressed as an integer. Use of the procedure discussed above is illustrated in Appendix A.

8.3.8 Steady State Process Conditions. The criteria which must be met to attain steady state conditions are defined by the applicable ASME Performance Test Code. The digital system may have the capability for storing the Code criteria for steady state conditions. Data observation of the individual variables may be compared with steady state criteria limits.

If the digital system determines that the process does not meet the criteria for steady state conditions, it should alert test personnel to this fact. All criteria and

Copyright ASME International
Provided by IHS under license with ASME
No reproduction or networking permitted without license from IHS

Not for Resale

the actual test run values may be printed or displayed for inspection by the parties involved in the test.

8.3.9 Rate of Change of Process Variables. It may also be desirable to calculate the rate of change of the process parameters and compare this to the permissible variation. To minimize the effect of noise, rescanning or smoothing (see para. 9.3.1.4) may be utilized.

8.3.10 System Response to Process Fluctuations. Due to minimal hysteresis and low inertial characteristics, electronic sensors normally used with digital systems are usually extremely responsive to changes in the process. Data acquired by the digital system will generally show greater variation in readings than data acquired by conventional instrumentation. The selection of analog input filtering and digital filtering techniques in the software should be based upon knowledge of the frequency and period of the process variations. These techniques may be incorporated into the digital system design to simulate the dampening capabilities of conventional instruments, if desirable.

Copyright ASME International
Provided by IHS under license with ASME
No reproduction or networking permitted without license from IHS

Not for Resale

SECTION 9 — DATA MANAGEMENT

9.1 INTRODUCTION TO DATA MANAGEMENT

Performance test data required by digital systems are internally stored and manipulated in the form of binary words. This Section will introduce the subject and highlight the limitations imposed by the length of the binary word and its consequential impact on test accuracy. Intermediate and advanced digital systems will have the capability to manipulate test data, and this Section will give guidance on how to derive the most benefit from this capability.

9.1.1 Data Representation in a Digital System. The digital values equivalent to test data readings are represented internally in the digital system by a series of bits-on and bits-off contained within a binary word.

All of the bits in a binary word are usually not entirely utilized for input data storage. One bit is frequently used to indicate instrument signals which exceed the A/D converter range, often referred to as an *overload bit.* Another bit is ordinarily a sign bit indicating whether the data value is positive or negative. Bits may be used to ensure the data integrity by always maintaining an even or odd bits-on count; these are known as *parity bits* or *checksum bits* and are generally an additional bit provided in excess of the basic binary word length. The remaining bits are used to represent the actual data value in a binary arithmetic code.

9.1.2 Binary Word Length. Generally speaking, the greater the number of A/D converter data bits, the less the instrument signal must change to effect a change in the LSB. Table 9.1 illustrates the relationship between the number of data bits and the resolution attainable.

EXAMPLE:

A 0.0488% change in instrument signal level is required to effect a change in the value of an 11 bit data word. For a 50 mV signal range being represented by a change in value from 0 to 2047 from the A/D converter, each digit is equivalent to 50/2047 mV (or 0.024 mV).

To change the LSB of the A/D converter, the resolution in the above example corresponds to a required temperature change of 0.54°F at 1000°F or a 0.65°F change at 200°F using a Type E (chromel-constantan) thermocouple. The effect is further emphasized with a Type J (iron-constantan) thermocouple where, at 1000°F, a temperature change of 0.77°F is realized and a 0.81°F change is seen at 200°F.

9.1.3 Computational Accuracy. Binary word length also influences computational accuracy and precision. The conversion of the output digital value from the A/D converter into engineering units of measure, the addition of calibration correction factor, or adjustment for zero offset, such as fluid head, are all affected by data word length as well as by mode of arithmetic computations. Calculated results of performance are also affected.

Effectively, a 16 bit computer word including sign has a maximum decimal number capacity of ±32,767, while a 32 bit word has a capacity of ±2,147,483,648.

These illustrations are applicable to fixed point arithmetic where it is always necessary to line up decimal points. In a digital system, this becomes the binary point in order to do arithmetic operations. This method is tedious for the programmer and requires computer memory for shift instructions, but has maximum numerical precision for a fixed word length.

Insufficient length of data words may well result in error due to truncation of digits from a number. For example, the product of two numbers using 16 bit data words including sign could not exceed ±32,767; otherwise, a truncated number would result. However, some digital systems may use two words (double precision) to implement fixed point arithmetic, which would alleviate this problem somewhat.

To aid in computations and programming, floating point arithmetic has been developed whereby the digital system keeps track of the decimal point in binary format. This decreases numerical precision if the same data word length is kept, since some of the bits must now be used to indicate the binary point location.

Copyright ASME International
Provided by IHS under license with ASME
No reproduction or networking permitted without license from IHS

Not for Resale

TABLE 9.1
PERCENT ERROR DUE TO INSUFFICIENT DATA BITS

Number of Data Bits, n	Decimal Number, d $(2^n - 1)$	Percent Error (or Computational Inaccuracy) $(1/d \times 100)$
1	1	100
2	3	33.33
3	7	14.28
4	15	6.66
5	31	3.226
6	63	1.587
7	127	0.787
8	255	0.392
9	511	0.196
10	1023	0.0977
11	2047	0.0488
12	4095	0.0244
13	8191	0.0122
14	16,383	0.00610
15	32,767	0.00305
16	65,535	0.00153
17	131,071	0.000763
18	262,143	0.000381
19	524,287	0.000191
20	1,048,575	0.0000954
21	2,097,151	0.0000477
22	4,194,303	0.0000238
23	8,388,607	0.0000119
24	16,777,215	0.00000596
25	33,554,431	0.00000298
26	67,108,863	0.00000149
27	134,217,727	0.000000745
28	268,435,555	0.000000373
29	536,870,911	0.000000186
30	1,075,741,823	0.0000000931
31	2,147,483,647	0.0000000466
32	4,294,967,295	0.0000000233

Copyright ASME International
Provided by IHS under license with ASME
No reproduction or networking permitted without license from IHS

Not for Resale

In a large industrial process, for example, the steam flow might be 15×10^6 lb/hr at an enthalpy of 1200 Btu/lb. The heat input to the process is then (15×10^6) (1200) or 18×10^9 Btu/hr. Even in fixed point arithmetic, this number would be truncated by seven decimal digits in a 16 bit data word and four decimal digits in a 24 bit data word. The truncation of the 16 bit word cannot be tolerated, and the use of floating point arithmetic aggravates this situation. This means that for this type of calculation, a 16 bit word digital system must use "double precision" arithmetic, which makes the digital system work like a system with a 32 bit binary word length.

9.2 MANUALLY PREPARED DATA

Not all measurements are appropriately monitored by digital systems. It may be more desirable, practical, or economical to manually obtain a measurement. In order to manually enter or substitute values into a digital system that is capable of calculating test results, the capability to retain in memory with the ability to recall should be considered. Several needs for manually prepared data arise.

Minor fluid flows are generally more practical to measure by the use of weigh tanks or by extraction from equipment design curves. Manually prepared flow rates may then be entered into the digital system capable of calculating results. This is especially important when establishing a steam cycle water balance prior to running a cycle heat rate test for a steam turbine.

Measurements that require extreme accuracy, unattainable by transducers, also require the ability to manually enter values with the appropriate precision.

Data that are found to be unacceptable at the end of a test could require a rerun of the test. Depending upon the relative importance to the results, provisions to enter manually substituted values should be considered. Whenever manually substituted values are used in calculations by the digital system, these entries should be flagged or otherwise distinguished for easy identification.

Manually prepared design data may be substituted into the equations to demonstrate their correctness. Design data for all variables may be entered and the resultant values compared with the design resultant values. These test case data may be entered for several design load points to demonstrate the credibility of the equations throughout the range of the test loads.

In order to demonstrate the sensitivity of a measurement and the effect on the resultant value of a change in any variable, manually entered data capabilities are required. This application is helpful for on-line monitoring to determine the relative importance of variables. For example, one could determine how a 5° temperature drop of a feedwater heater outlet temperature would affect the calculated steam turbine cycle heat rate.

9.3 REDUCTION OF TEST DATA

The digital system may have the capabilities of reducing test data to engineering units and averaging this converted data. Manual reduction of data to engineering units may introduce errors due to interpolation while averaging the converted data. Automatic data reduction and computation of results eliminate the conversion and human errors associated with manual data processing.

The conversion of measurement signals to engineering units may require linear, polynomial, logarithmic, or other functions. Standard tables for conversion of thermocouples are available. Various programming techniques can be used to represent the nonlinear conversion factors accurately. Digital techniques are ideal for pulse counting applications. The engineering unit value per pulse must first be accurately determined for use as the conversion factor.

Another advantage of a digital system is its inherent ability by virtue of high-speed data collection to more accurately correlate the data sample with the time of collection.

For measurements where the process noise is appreciable, the effect of process variation frequency should be considered when establishing the sampling or scan rate.

All data from a test that did not maintain the steady state requirements should be identified and appropriate corrective action taken to eliminate problem areas.

The data system can have the capability to allow test personnel to reject certain parts of the data (e.g., if non-steady state conditions existed for part of a steady state test). The averages may be calculated based only upon the unrejected data.

9.3.1 Application of Correction Factors. As explained in para. 7.3, sensor fine tuning is not always necessary. In fact, after a period of time, transducers tend "to take a set" and instrument drift decreases. Fewer manual transducer adjustments, especially span adjustments, allow the transducer to remain in a "set" condition. In-place calibration with software correction factors is preferable to manual adjustment either

Copyright ASME International
Provided by IHS under license with ASME
No reproduction or networking permitted without license from IHS

Not for Resale

in-place or in the instrument shop. Removal and reinstallation of the transducer process connections tend to apply undesirable torque to the body and sensing element. This action nullifies the calibration performed in the instrument shop. Three basic methods of applying correction factors are presented as a substitute for manual sensor adjustments.

9.3.1.1 Total Curve Fit. This method is illustrated in Fig. 9.1. The actual sensor output curve is derived from several calibration points and replaces the nominal sensor output curve in converting the sensor electrical output into engineering unit values. The nominal sensor output curve is the set of points that one would expect from sensor outputs with no error. The actual sensor output is represented as a polynomial of the form $y = a_0 + a_1x + a_2x^2 + \ldots + a_nx^n$. It is desirable that the zero offset as represented by the a_0 coefficient be independently adjustable. A transducer zero shift usually does not affect the characteristic shape of its actual output curve.

The digital system may be programmed with the capability of deriving this polynomial from the calibration point data. Care must be taken in the selection of the polynomial order to prevent undesirable points of inflection. The actual sensor output curve should be checked at its operational range extremities to assure continuity.

The measurement accuracy using this method depends upon the number of points selected, their relative position to each other, and how well the polynomial curve fits the calibration points.

9.3.1.2 Offset Curve Fit. This method is illustrated in Fig. 9.2. An offset value is the difference between an actual sensor output value and the nominal or expected sensor output value at the same sensor electrical output value. An actual sensor output value is obtained by either adding the offset value to or subtracting it from the associated nominal value. The offset curve is derived similarly to the total curve and the same precautions should be observed.

9.3.1.3 Offset Straight Line Segments. This method is illustrated in Fig. 9.3. An offset value is defined similarly to that described in the offset curve fit method. Line segments are selected from the calibration point values. These segments are represented by independent linear equations of the form $y = mx + b$. The length of each segment is usually equal but may be selected to best fit the calibration points. Five segments are frequently selected to represent the offset curve in the sensor's operational range. The total and offset curve fit methods require more elaborate software than the line segment method due to the derivation of the polynomials. A higher resolution may be obtained over the operational range of the sensor by using either offset method than by using the total curve fit method, since the offset curves are more nearly linear.

9.3.1.4 Software Filtering or Data Smoothing. Some digital systems are programmed to minimize noise effects by arithmetically "dampening" or "smoothing" sharp variations in process inputs. Caution should be exercised to ensure that software data smoothing techniques are not applied without full knowledge and concurrence of the parties to the test.

Where smoothing is desired, possibly because noise cannot be overcome, one method is:

$$Y = (a)y + (1 - a)x$$

where

Y = new output
y = last output
x = new input
a = smoothing factor

Note that when the smoothing factor is zero, the output equals the input and when the smoothing factor is equal to one, the output value is constant. Also, as the data observations increase in frequency, the dampening effect is less pronounced. With a large number of samples, the smoothed curve approaches the original, or unsmoothed, curve.

9.3.2 Conversion to Engineering Units of Measure. The digital readout from the A/D converter is a linear representation of the voltage applied to the analog input subsystem. To present this information in engineering units, a subsequent conversion operation is required.

Standard recognized equations should be used for conversion to engineering units of measure. Where there exists a nonlinear relationship between instrument signal level and the corresponding engineering units of measure, it is acceptable to fit piecewise linear segments of the conversion equation or to use polynomial curve fits.

The piecewise linear segments should be chosen so that there is continuity at the boundaries. A greater number of segments will provide a more accurate conversion over the test data range.

When converting digital data to engineering units, recognized equations should be used.

Copyright ASME International
Provided by IHS under license with ASME
No reproduction or networking permitted without license from IHS
Not for Resale

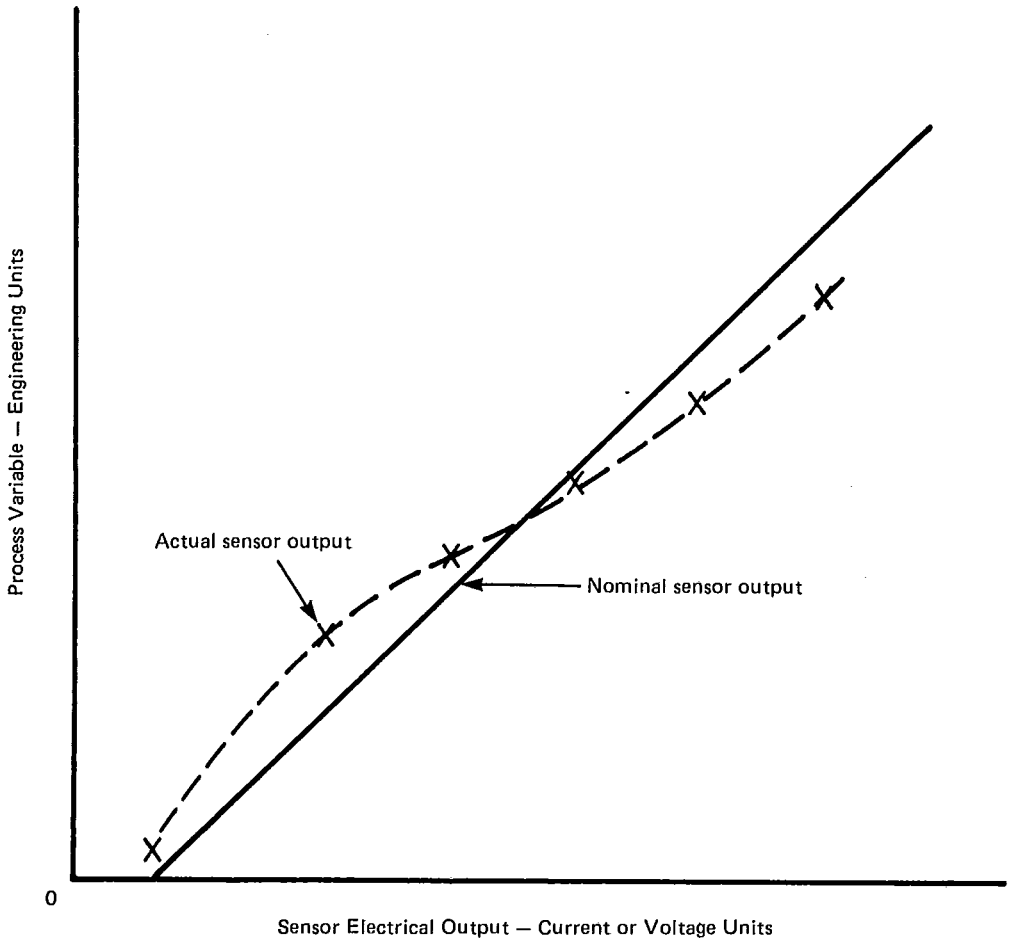

FIG. 9.1 TOTAL CURVE FIT

Copyright ASME International
Provided by IHS under license with ASME
No reproduction or networking permitted without license from IHS

Not for Resale

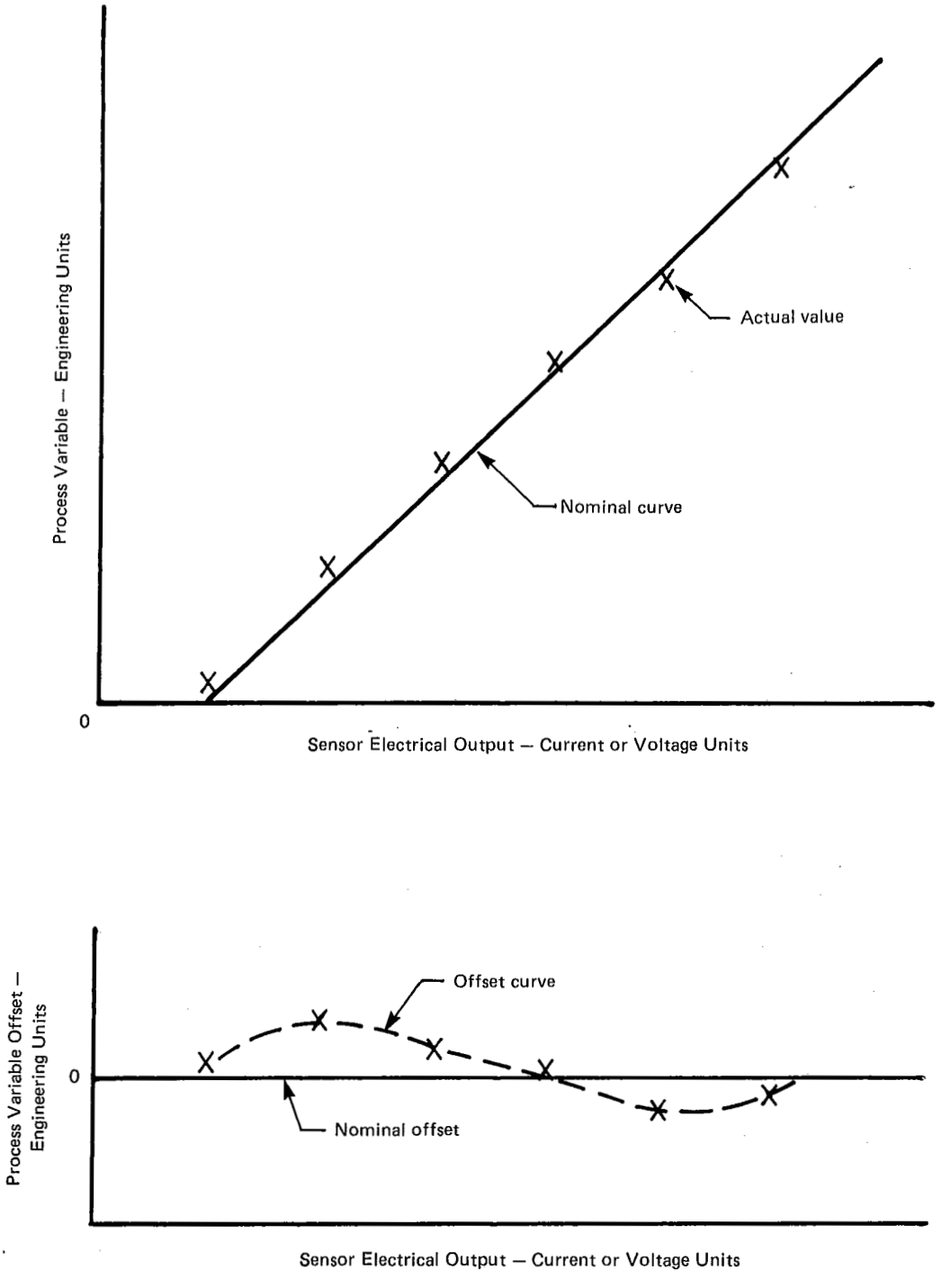

FIG. 9.2 OFFSET CURVE FIT

Copyright ASME International
Provided by IHS under license with ASME
No reproduction or networking permitted without license from IHS

Not for Resale

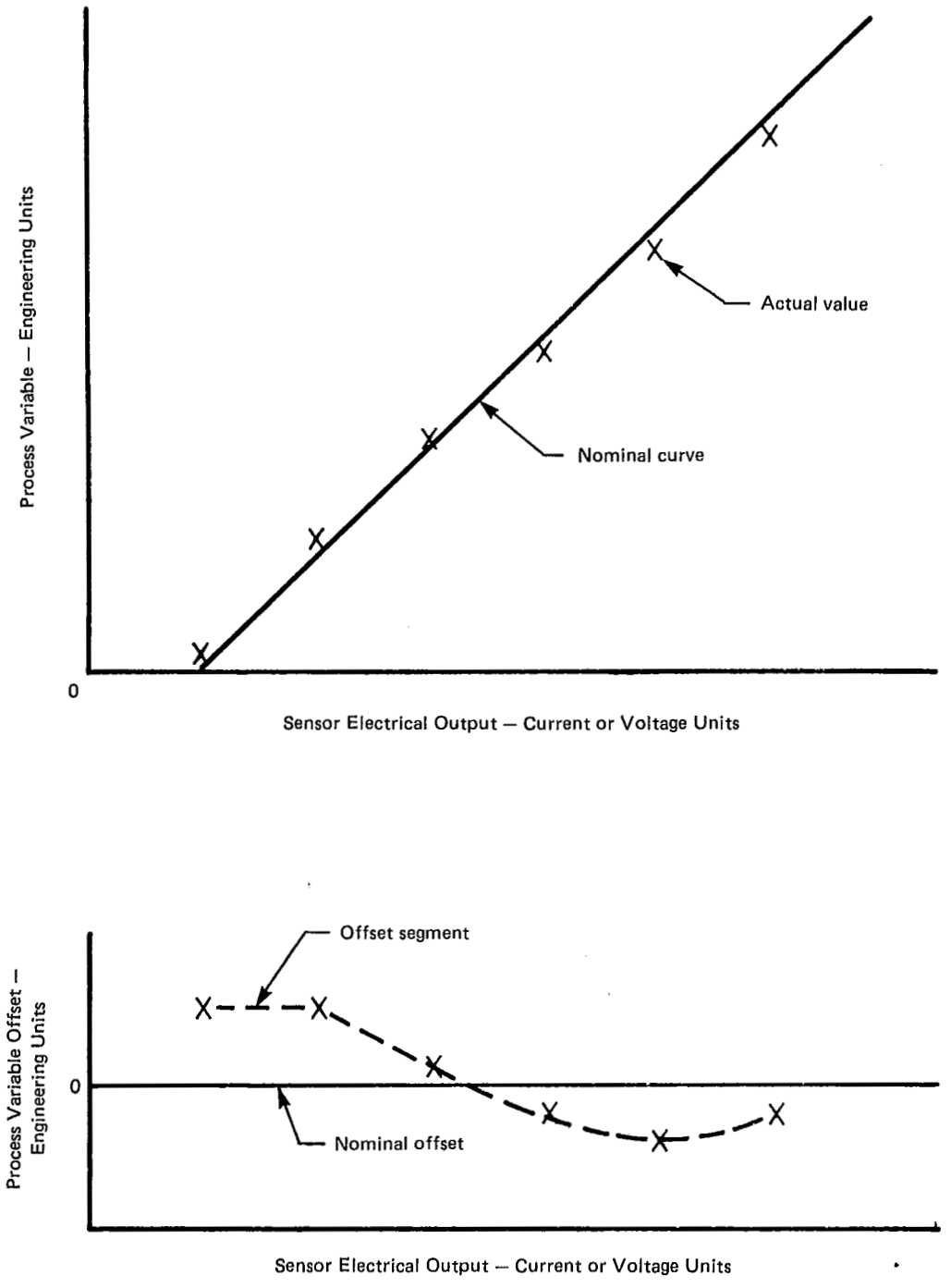

FIG. 9.3 OFFSET STRAIGHT LINE SEGMENTS

Copyright ASME International
Provided by IHS under license with ASME
No reproduction or networking permitted without license from IHS

Not for Resale

A set of equations describing the conversion of thermocouple signal levels to engineering units of measure is defined in the National Bureau of Standards Monograph 125.

9.4 CALCULATION OF RESULTS

The thermodynamic properties of steam and water are to be calculated in accordance with ASME Steam Tables, using the International Formulation Committee (IFC) formulations. (The 1967 IFC formulations have been put into a set of function type computer subroutines written in FORTRAN IV. A list of available functions as defined by R. B. McClintock and G. J. Silvestri, "Formulations and Iterative Procedures for the Calculation of Properties of Steam," is given in Appendix B.)

Care should be exercised when deciding when to average data — before or after converting to engineering units. For example, in the calculation of flows, the tendency has been to average the differential pressure developed across the primary element and then do one flow calculation. In digital systems it may be feasible to calculate the flow for each individual differential pressure reading, then average the results. Due to the effect the square root has upon the calculated flow and the effect of density changes in the fluid during the test period, more accurate flow rate results are obtained using the latter method.

9.5 RECORDS AND TEST REPORTS

The digital system may be provided with the capability of producing printed tabular listings or graphs of calibration data, test data, and results. The printed output is faster, more accurate, and more legible than that obtained by manual report. Extraction of records from stored data of a digital system eliminates human transcribing error.

Permanent records can be stored on magnetic tape or disc requiring minimum storage space and providing for ease of data retrieval.

Data acquired during the test should be available for use by test personnel and can be available to other digital systems. Consequently, all data incorporated into the final report of the test should be recorded by the digital system if that lies within the system capability.

When presenting data for inspection by test personnel, the digital system should mark the individual data readings by some method which uniquely identifies the parameter.

The data system may also have the capability to average all appropriate valid data during the test period. The average reading of each individual variable may be printed out and appropriately identified.

Copyright ASME International
Provided by IHS under license with ASME
No reproduction or networking permitted without license from IHS

Not for Resale

SECTION 10 — OPERATIONAL CONSIDERATIONS

10.1 SYSTEM VALIDATION

Prior to the test, it is assumed that all independent sensor calibrations have been completed. Before a test actually begins, all parties to the test should be confident that the digital system is reading the sensors as required by the test plan and converting the values to correct engineering units if computational capability is available. This can be accomplished by an unofficial test run or comparison with independent instrumentation where available.

10.2 PRETEST CHECKLIST

Digital systems are complex. Assurance that tests conducted via digital systems are correct and accurate is dependent upon verification of proper status of many detailed items, including the following.

(a) Establish that the system area heating, ventilation, and air conditioning is operating properly.

(b) Calibrate complete system only after thermal stabilization is reached (see Section 7).

(c) Conduct testing only after thermal stabilization is reached.

(d) Preclude switching or motor starting surges in the AC power supply to the digital system.

(e) Do not allow adjustment of DC logic power supplies, transducer power supplies, or A/D converters between system calibration and test time.

10.3 TEST CHECKLIST

The following items should be checked both prior to and during testing.

(a) Comparison to a Reference Analog Value. A/D input systems may have a range of calibrated reference inputs which test the accuracy and linearity of the system. Failure to read a reference input within limits should be alarmed and investigated. Reference inputs may include standard cells, precision resistors (for RTDs), thermocouple reference junction temperature, or precision power supply voltages.

(b) Comparison to a Reference Digital Value. Digital input systems need to have two test patterns. One pattern marks all "even" bits, the other pattern marks all "odd" bits. Failure to read a reference pattern correctly should be investigated. With fused digital inputs, verify that an indicated open circuit is due to an open contact rather than a blown fuse.

(c) Many analog input systems include test equipment which will detect such failures as open or shorted thermocouples, out of range transducers, blown fuses, failed power supplies, etc. Indications of this type of equipment malfunction should be monitored closely prior to and during tests.

10.4 SOFTWARE CHECKS ON DIGITAL SYSTEM DATA

Ensuring proper handling of data within the digital system as it transfers, stores, and performs operations on the data is an added concern.

10.4.1 If software diagnostic check routines are available, it is advisable to turn them on prior to the test. Hardware check routines should also be utilized if available. If these diagnostics are available on-line, they should be included in the test checklist (para. 10.3).

10.5 DIGITAL SYSTEM MALFUNCTIONS DURING A TEST

There are very few software or hardware failures which will not result in an aborted test. Hardware repair time will usually take longer than the test will allow. Software failures can alter or destroy test data.

Copyright ASME International
Provided by IHS under license with ASME
No reproduction or networking permitted without license from IHS

Not for Resale

APPENDIX A
ILLUSTRATION FOR CALCULATING THE NUMBER OF TEST READINGS REQUIRED

EXAMPLE FOR METHOD DISCUSSED IN PARA. 8.3.7

The following throttle steam temperature readings were taken during a steam turbine test:

N	Test Readings, °F (x) (temperature)
1	901
2	900
3	903
4	902
5	902
6	903
7	901
8	899
9	899
10	900

Determine if the number of test readings N taken is sufficient to satisfy an uncertainty limit of 0.05% with 95% confidence level. If the number of readings taken is not sufficient, estimate the number of readings required.

Solution

The influence factor for throttle steam temperature in a turbine test is C = 0.08%/°F. This factor includes the effect of throttle steam temperature change on heat rate based on manufacturer's correction curve and the effect of temperature change on steam enthalpy based on the slope of the steam tables enthalpy curves at constant pressure. Refer to PTC 6 for further details regarding the calculation of the above influence factor.

$$\Sigma x = 9{,}010$$

$$\Sigma x^2 = 8{,}118{,}030$$

$$\bar{x} = \frac{\Sigma x}{N} = \frac{9010}{10} = 901$$

$$(\Sigma x)^2 = (9010)^2 = 81{,}180{,}100$$

$$S = \left[\frac{\Sigma x^2 - \frac{(\Sigma x)^2}{N}}{N-1}\right]^{1/2} = \left[\frac{8{,}118{,}030 - \frac{81{,}180{,}100}{10}}{10-1}\right]^{1/2}$$

$$= 1.491$$

$$S_{\bar{x}} = \frac{S}{\sqrt{N}} = \frac{1.491}{\sqrt{10}} = 0.471$$

From Table 8.1, $t_{9,\,95\%} = 2.262$

$$U_c = C\,(t_{9,\,95\%})\,S_{\bar{x}}$$

$$= (0.08)\,(2.262)\,(0.471)$$

$$= 0.085$$

$$U_c > 0.05$$

(Therefore, the number of test readings is not sufficient.)

Estimate the number of test readings required to satisfy the specified uncertainty limit $U_s = 0.05\%$

Initially, assume $N = 10$

From Table 8.1, $t_{9,\,95\%} = 2.262$

$$N_R = \left[\frac{C(t_{9,\,95\%})\,S}{U_s}\right]^2$$

$$N_R = \left[\frac{(0.08)\,(2.262)\,(1.491)}{0.05}\right]^2 \cong 29$$

$$N_R \neq N$$

Set $N = 29$

$$t_{(28,\,95\%)} = 2.048$$

Copyright ASME International
Provided by IHS under license with ASME
No reproduction or networking permitted without license from IHS

Not for Resale

$$N_R = \left[\frac{(0.08)\,(2.048)\,(1.491)}{0.05}\right]^2$$

$$N_R \cong 24$$

$$N_R \neq N$$

Set $N = 24$

$$t_{(23,\,95\%)} = 2.069$$

$$N_R = \left[\frac{(0.08)\,(2.069)\,(1.491)}{0.05}\right]^2 \cong 24$$

$$N_R = N \cong 24$$

Therefore, the estimated number of test readings required is 24.

Copyright ASME International
Provided by IHS under license with ASME
No reproduction or networking permitted without license from IHS

Not for Resale

APPENDIX B
1967 ASME STEAM PROPERTY FUNCTIONS

MULTIPLE VALUED FUNCTIONS		
HSSISS	$h, t, v, x, = f(p, s)$	Wet or superheated steam
HPSISS	$h, t, v, x = f(p,s)$	Superheated steam
HSS	$h, s, v = f(p, t)$	Superheated steam
HSV	$h, t, s, v = f(p)$	Saturated vapor
HCL	$h, s = f(p, t)$	Compressed liquid
HSSICL	$h, t = f(p, s)$	Compressed liquid
SSSISS	$s, t, v, x = f(p, h)$	Wet or superheated steam
SPSISS	$s, t, v, x = f(p, h)$	Superheated steam
SSSICL	$s, t = f(p, h)$	Compressed liquid
CRFLO	$Fc, °S = f(p, h)$	Wet or superheated steam
CRVEL	$Vc, \gamma = f(p, h)$	Wet or superheated steam

Isentropic Drop Subroutines

ZSDT	$h_1, s_1, x_1, v_1, t_2, x_2, v_2, h_2, = f(p_1, p_2, t_1)$	Wet or superheated steam
ZSDH	$t_1, s_1, x_1, v_1, t_2, x_2, v_2, h_2 = f(p_1, p_2, h_1)$	Wet or superheated steam
ZSRT	$h_1, s_1, t_2, h_2 = f(p_1, p_2, t_1)$	Compressed liquid
ZSRH	$t_1, s_1, t_2, h_2 = f(p_1, p_2, h_1)$	Compressed liquid

Symbols

p = pressure, psia
t = temperature, °F
h = specific enthalpy, Btu/lb
s = specific entropy, Btu/lb-°F
v = specific volume, ft^3/lb
x = quality, %/100
μ = viscosity, lb/ft-sec
k = thermal conductivity, Btu/hr-ft-°F
Pr = Prandtl number
Vc = critical velocity, ft/sec
Fc = critical flow, lb/hr-$in.^2$
γ = isentropic exponent ($pv^\gamma = C$)
$°S$ = superheat, °F

Copyright ASME International
Provided by IHS under license with ASME
No reproduction or networking permitted without license from IHS

Not for Resale

1967 ASME STEAM PROPERTY FUNCTIONS (CONT'D)

SINGLE VALUED FUNCTIONS

State Unknown (Either Wet or Superheated)

HPS	$h = f(p, s)$
SPH	$s = f(p, h)$
VPH	$v = f(p, h)$
VPS	$v = f(p, s)$
TPH	$t = f(p, h)$
TPS	$t = f(p, s)$
THS	$t = f(h, s)$
PHS	$p = f(h, s)$
XPH	$x = f(p, h)$
XPS	$x = f(p, s)$

Saturation Line and Wet Steam

HPSW	$h = f(p, s)$
SPHW	$s = f(p, h)$
VPHW	$v = f(p, h)$
VPSW	$v = f(p, s)$
TSL/TSATP	$t = f(p)$
PHSW	$p = f(h, s)$
PSL/PSATT	$p = f(t)$
PVPHW	$pv = f(p, h)$

Superheated Steam

HPSD	$h = f(p, s)$
SPTD	$s = f(p, t)$
SPHD	$s = f(p, h)$
SPTD	$s = f(p, t)$
VPHD	$v = f(p, h)$
VPSD	$v = f(p, s)$
VPTD	$v = f(p, t)$
TSUPH/TPHD	$t = f(p, h)$
TSUPS/TPSD	$t = f(p, s)$
THSD	$t = f(h, s)$
PHSD	$p = f(h, s)$
VISV	$\mu = f(p, t)$
CONDV	$k = f(p, t)$
PRSTM	$Pr = f(p, t)$

Compressed Liquid

HPTL	$h = f(p, t)$
SPTL	$s = f(p, t)$
VPTL/VCL	$v = f(p, t)$
TPHL	$t = f(p, h)$
TPSL	$t = f(p, s)$
VISL	$\mu = f(p, t)$
CONDL	$k = f(p, t)$
PRLIQ	$Pr = f(p, t)$

Saturated Vapor

HGP	$h = f(p)$
HGT	$h = f(t)$
SGP	$s = f(p)$
SGT	$s = f(t)$
VGP	$v = f(p)$
VGT	$v = f(t)$
PSV	$p = f(s)$
PVGP	$pv = f(p)$

Saturated Liquid

HFP	$h = f(p)$
HFT/HSL	$h = f(t)$
SFP	$s = f(p)$
SFT/SSL	$s = f(t)$
VFP	$v = f(p)$
VFT/VSL	$v = f(t)$
TSLH	$t = f(h)$

GENERAL NOTES:
(a) Taken from McClintock, R. B., and Silvestri, G., "Formulations and Iterative Procedures for the Calculation of Properties of Steam," New York; ASME, 1968.
(b) Some subroutines have been given two names for compatibility with existing programs. These names are separated by a slash. When calling these subroutines, the names can be used interchangeably.

Copyright ASME International
Provided by IHS under license with ASME
No reproduction or networking permitted without license from IHS
Not for Resale

APPENDIX C
EVALUATION OF DIGITAL SYSTEM COMPONENT ERRORS AND ANALYSIS OF OVERALL SYSTEM ERRORS

Accuracy specifications for the analog input section of a digital system are frequently given by single system error statements in percent of full range (% FR). To assure that optimum accuracy is obtained in a particular application, it is desirable to be aware of the errors associated with the elements of the system and how they affect the overall system accuracy.

Paragraph 6.4, System Accuracy, mentions the digital system elements of concern which may introduce errors. These elements will be treated in more depth here with emphasis on their use as part of an overall instrumentation system from the sensor to the digital printout. The elements involved in a particular measurement vary with the process variable and frequently involve different accuracy considerations.

Regardless of the particular variable being measured, an overall system calibration should be made to assure the highest accuracy. While elements of the system are customarily calibrated individually, an overall system calibration should be made from the sensor to the digital printout. For example, the overall system calibration of a pressure measurement in an advanced data system could be accomplished by applying pressure at the pressure transducer with a calibration standard (dead weight gage or equivalent) and obtaining a mean value printout in engineering units for each calibration point. The mean value is obtained from histogram data from a significant number of readings (see ISA RP 55.1). The mean value is used to establish calibration data which is stored in the digital system and used to automatically correct each reading of the input to the system.

SYSTEM COMPONENT ERRORS

For the purpose of discussing overall system accuracy, the elements considered for this typical system are shown in Fig. C1. The errors associated with each of the elements shown in Fig. C1 are discussed below. A number of typical examples for different types of measurements are given.

SENSORS

Sensors, primary elements, and, in the case of thermocouples, the lead wire external to the digital system are elements involved in the overall accuracy consideration.

The errors associated with sensors are addressed in the Instruments and Apparatus Supplements. When applied with digital systems, the sensor repeatability and drift characteristics are of primary importance since the digital system can be used to store the calibration curves. Periodic analysis of calibration adjustments can be used to determine when recalibration is required, before drift becomes excessive.

In the case of temperature measurements using thermocouples, the selection of lead wire from the thermocouple to the digital system affects the system accuracy. Generally, thermocouple wire is used for this purpose and the reference junction is in the digital system. If high quality wire from the same batch of wire used in the manufacture of the thermocouples is used for the lead wire, then the errors due to these additional junctions will be minimized. The reference junction is another source of error which will be addressed as an element of the digital system. Limits of error for thermocouples and lead wire are covered in PTC 19.3.

In actual practice, the typical limits of error may be less than those stated in the applicable Instruments and Apparatus Supplements. The examples used in the analysis of overall system errors included in this Appendix, Table C7, use values obtained from experience with high accuracy testing.

Copyright ASME International
Provided by IHS under license with ASME
No reproduction or networking permitted without license from IHS
Not for Resale

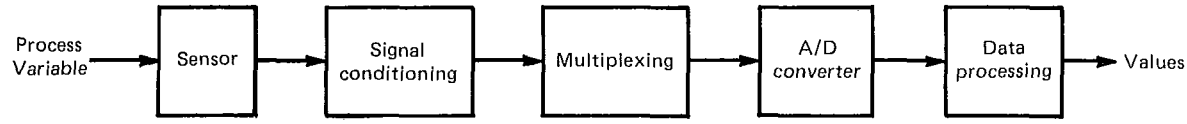

FIG. C1 DIGITAL SYSTEM

SIGNAL CONDITIONING

The signal conditioning and filtering elements of the digital system include the types of signal conditioning addressed in Section 5 of this Supplement. These include milliamp to millivolt conversions, the voltage divider circuits used to reduce higher level signals, RTD bridges, thermocouple reference junctions, and analog filtering. Typical errors for these elements are shown in Tables C1 and C2.

MULTIPLEXING

Errors introduced by multiplexing vary with the type of multiplexer used. Table C3 illustrates typical errors introduced with a relay type multiplexer.

A/D CONVERSION

The A/D conversion function is generally provided by either an integrating type A/D converter or a successive approximation type. Since the successive approximation converters require low level differential amplifiers for low level inputs, they are included here in the accuracy considerations for the A/D converter function. Table C4 includes the various sources of error which can be encountered in the A/D conversion process. The table does not show the two types of A/D converters since the accuracy categories are the same for each even though the linearity error is of a different nature.

DATA PROCESSING ERRORS (CONVERSION TO ENGINEERING UNITS AND CALIBRATION)

Some error is introduced by the conversion of the A/D converter output in digital form to engineering units for printout or for use in calculation of results. The general term *conversion to engineering units* is intended to include all aspects of flow calculations, thermocouple linearization, and other nonlinear conversions, as well as the more straightforward linear conversions. A typical value for the error introduced by the conversion to engineering units (and all related calculations) is ±0.02% FR. With thermocouple readings in the range where the millivolt gradient is low, the linearization errors may exceed ±0.02% FR.

Error can also be introduced by the representation of calibration data when using a curve fitting approach which may not provide a good fit in between calibration points. This error must be considered in addition to the conversion to engineering units error.

THERMAL COEFFICIENTS AND LONG TERM DRIFT ERRORS

Zero Offset Errors. The multiplexer and the A/D converter have zero offset errors which must be calibrated out either manually or by periodic automatic recalibration. The zero offset changes as a function of ambient temperature. Long term drift will also cause zero offset error. To be precise, the thermal coefficient and long term drift errors for the multiplexer and A/D converter should be considered separately and associated with the errors for each of those system elements. However, it is common practice to specify the long term drift and thermal coefficients for the system including both elements. In general, this has a negligible effect on the overall accuracy figures. The zero offset thermal coefficient is typically ±0.001% FR/°C. A typical value for long term drift of zero offset is ±0.01% FR for a period of 2 to 6 months.

Many digital systems include automatic recalibration which corrects zero offset errors. This is done by periodically scanning shorted inputs to determine the offset correction. With multigain amplifiers, the zero offset for each gain and polarity should be checked.

Gain Errors. A typical value for the thermal coefficient for gain error is ±0.004% FR/°C. This value includes

Copyright ASME International
Provided by IHS under license with ASME
No reproduction or networking permitted without license from IHS

Not for Resale

TABLE C1
TYPICAL SIGNAL CONDITIONING ERRORS

Type of Signal Conditioning	Typical Error
Milliamp to millivolt conversion	±0.05% FR
Voltage divider circuit	±0.05% FR
RTD bridge	±0.025% FR
Thermocouple reference junction	±1°F [see Note (1)]
Analog filtering	Not significant [see Note (2)]
Thermal coefficients and long term drift	Refer to later discussion

NOTES:
(1) In order to express the ±1°F reference junction temperature error in terms of percent full range, five factors are considered. These are the ±1°F stated accuracy of the reference junction, the type of thermocouple, input range, operating temperature of the thermocouple, and the reference junction temperature. For our examples, two thermocouples with a 340°F range are considered with two input ranges as illustrated in Table C2.
(2) The error introduced by analog filtering should not be significant if a balanced filter is used. The common mode rejection capability of the system is 1,000,000:1 (120 dB) or greater, and the signal is relatively stable.

TABLE C2
COLD REFERENCE JUNCTION ERROR IN PERCENT FULL RANGE FOR A 1°F ERROR

	Input Range	
Thermocouple Type	±50 mV	±10 mV
Type E-CC 0–340°F	±0.04% FR	±0.2% FR
Type J-IC 0–340°F	±0.03% FR	±0.15% FR

TABLE C3
RELAY TYPE MULTIPLEXER ERRORS

Error Source	Typical Errors
Thermal noise	See Note (1)
Crosstalk	Not significant at 120 dB attenuation
Switching noise	See Note (2)
Contact resistance	Not significant with wetted contacts
Zero offset	Not significant with automatic correction
Thermal coefficients and long term drift	Refer to later discussion

NOTES:
(1) The duty cycle of the relays must be low enough to prevent temperature differentials from coil heating. Common practice provides a 1–2% duty cycle for point relays. If submultiplexing relays are used, the duty cycle on these relays should be limited to 30–40%. Duty cycle is defined as the percentage of time that the relay coil is energized.
(2) Switching noise (or ringing) occurs when the relay contacts close. Filtering can be used or, since this noise dissipates in less than 1 msec, its effects can be eliminated with a time delay in the system design.

Copyright ASME International
Provided by IHS under license with ASME
No reproduction or networking permitted without license from IHS

Not for Resale

TABLE C4
A/D CONVERSION ERRORS

Error Source	Typical Errors
Quantization error [± ½ LSB (assume 12 bit full range + sign)]	±0.0125% FR [see Note (1)]
Linearity	±0.0125% FR [see Note (2)]
Amplifier bias current	Not significant for most recent designs
Gain error and zero offset	Can be eliminated by calibration [see Note (3)]
Thermal coefficients and long term drift	Refer to later discussions

NOTES:
(1) This error is a function of the number of bits (resolution) in the A/D converter. For example, the corresponding quantization error for a 10 bit A/D converter is ±0.05% FR, and for a 14 bit A/D converter is ±0.0031% FR. Care should be exercised when selecting bipolar A/D converters to determine if the sign bit is included in the number of resolution bits.
(2) The linearity error with a successive approximation type A/D converter is predominantly the differential linearity error which is typically ± ½ LSB. With a dual slope A/D converter, the linearity error is predominantly the integral linearity error and is a function of the converter clock rate (the time between pulses).
(3) Most A/D converters are provided with means of calibration for gain and zero offset errors. The calibration can be manual or with a digital system, the converter can be furnished with periodic automatic calibration.

the thermal coefficient of the reference voltage source. The long term drift effects on gain typically are between 0.02% FR and 0.1% FR for 6 months, including the effect of voltage reference drift. Some digital systems incorporate automatic recalibration for full range to minimize the effects of gain errors due to drift. Another approach in identifying gain drift is to periodically scan a voltage reference (or references) input, checking against very narrow limits. An alarm output is given whenever the reference alarm dead band tolerance is exceeded, indicating the need for manual recalibration. The manual or automatic recalibration of bipolar A/D converters should check both polarities. With multigain amplifiers, each gain should be checked for both polarities.

Reference Voltage Errors. The most common sources of reference voltage errors are the inaccuracy of the voltage regulation circuitry, its thermal coefficient, and long term drift. Reference voltages are used in A/D converters, bridge circuits (such as RTDs), and for the standard or reference for automatic gain calibration or gain error monitoring. Reference voltage errors associated with A/D converters and bridge circuits are generally included in the accuracy statements for those devices. Errors in the reference voltages used as the standard for automatic recalibration of gain directly affect the accuracy of the digital system.

Typical values for standard or reference voltage errors are:

(a) Voltage regulator output (stated accuracy) — ±0.001% FR
(b) Thermal coefficient — ±0.001% FR/°C
(c) Long term drift — ±0.005% FR/6 mo

Common Mode Errors. Common mode error is caused by voltage (noise) which appears equally between each input signal wire and ground. The ability of the analog input system to reject the common mode voltage while processing the desired differential input signal is referred to as the *common mode rejection* (CMR). The CMR is usually expressed in decibels by the equation

$$CMR = 20 \log_{10} \frac{V_{CM}}{V_{CMO}}$$

where

CMR = common mode rejection, dB
V_{CM} = common mode voltage on signal wires
V_{CMO} = common mode signal component in output reading

A maximum common mode voltage which can be tolerated should be defined. A typical CMR capability is defined as the common mode voltage reduced by 120 dB for a range of DC to 60 Hz with a maximum voltage of ±250 V DC or AC, peak to peak.

For example, with a CMR of 120 dB, a ±10 V common mode voltage on a pair of input signal wires will be reduced by 10^6 or to ±10 microvolts (μV). When measured on a 50 mV full range, the error is ±0.01%. With a ±10 mV range, the error is ±0.05%.

System Noise Error. The analog portions of digital systems characteristically have an ambient noise level on the order of 5 μV. For systems with multiranged low level differential amplifiers, the error is defined as ±5 μV referred to input (RTI) and its error calculated in percent full range for each amplifier range. For a fixed range system, the error is defined in percent full range.

Copyright ASME International
Provided by IHS under license with ASME
No reproduction or networking permitted without license from IHS
Not for Resale

TABLE C5
TYPICAL DIGITAL SYSTEM ERRORS

System Element	Typical Error
A Signal Conditioning	
Cold Reference Junction (Type E, 0–340°F)	
1 Read on ±50 mV FR	±0.04% FR
2 Read on ±10 mV FR	±0.2% FR
3 Filtering	Not significant for stable signal [Note (1)]
4 Attenuation	±0.05% FR
5 Milliamp to millivolt conversion	±0.05% FR
6 RTD bridge and power supply	±0.025% FR
B Multiplexer (Assuming Wetted Contact Relays)	
1 Thermal noise	Not significant [Note (1)]
2 Crosstalk	Not significant [Note (1)]
3 Switching noise	Not significant [Note (1)]
4 Contact resistance	Not significant [Note (1)]
5 Zero offset	Not significant with automatic correction [Note (1)]
C ADC	
1 Quantization [assume 12 bit, including sign (± ½ LSB)]	±0.0125% FR
2 Linearity	±0.0125% FR
3 Gain	Calibrated to zero
4 Zero offset	Not significant with automatic correction
D Data Processing	
1 Conversion to engineering units	±0.02% FR
2 Calibration curve representation	Depends on curve fit type
E Thermal Coefficients and Long Term Drift	
1 Thermal coefficients	±0.005% FR/°C
2 Long term drift	±0.05% FR/6 mo
F Reference Voltage	
1 Voltage regulator output (stated accuracy)	±0.001% FR
2 Thermal coefficient	±0.001% FR/°C
3 Long term drift	±0.005% FR/6 mo
G Common Mode (120 dB) (Assume ±10 V Common Mode Voltage)	
1 ±50 mV range	±0.01% FR
2 ±10 mV range	±0.05% FR
H System Noise	
1 5 μV on a range of ±50 mV	±0.005% FR
2 5 μV on a range of ±10 mV	±0.025% FR

NOTE:
(1) See appropriate explanation in the text of this Appendix.

Copyright ASME International
Provided by IHS under license with ASME
No reproduction or networking permitted without license from IHS

Not for Resale

TABLE C6
SUMMARY OF OVERALL DIGITAL SYSTEM ERRORS FOR ANALOG INPUTS

Analog Input Type	With Common Mode, Thermal, and Cold Reference Junction Errors		No Common Mode, Thermal, or Cold Reference Junction Errors	
	Worst Case Error	Probable Error	Worst Case Error	Probable Error
Type E Thermocouple at 340°F read on ±50 mV range	±0.131% FR	±0.056% FR	±0.051% FR	±0.027% FR
Type E Thermocouple at 340°F read on ±10 mV range	±0.351% FR	±0.211% FR	±0.071% FR	±0.037% FR
RTD (50 mV range)	±0.116% FR	±0.046% FR	±0.076% FR	±0.037% FR
Signal conditioned — milliamp to millivolt (50 mV range)	±0.141% FR	±0.063% FR	±0.101% FR	±0.057% FR

EXAMPLE
The worst case error for the RTD = A6 + B + C1 + C2 + D1 + E1(5°C) + F1 + F2(5°C) + G1 + H1 where the letters refer to the element headings in Table C5.

Worst Case Error = 0.025 + 0 + 0.0125 + 0.0125 + 0.02 + 0.025 + 0.001 + 0.005 + 0.01 + 0.005 = ±0.116% FR

Probable Error $= (0.025^2 + 0.0125^2 + 0.0125^2 + 0.02^2 + 0.025^2 + 0.001^2 + 0.005^2 + 0.01^2 + 0.005^2)^{1/2}$ = ±0.046% FR

TABLE C7
SUMMARY OF TYPICAL ERRORS INVOLVED IN OVERALL SYSTEM ACCURACY

System Element		Thermocouple Type E at 340°F (Read on ±10 mV Range)	Thermocouple Type E at 340°F (Read on ±50 mV Range)	Thermocouple Type E at 1000°F (Read on ±50 mV Range)	RTD at 340°F (±50 mV Range)	Flow 4,000,000 lb/hr (±50 mV Range)	Pressure 1000 psig (±50 mV Range)
Sensor (With Calibration)		±0.5°F	±0.5°F	±1.0°F	±0.5°F	±0.15% FR	±0.1% FR
Digital System Error in % FR	Worst Case	±0.071	±0.051	±0.051	±0.076	±0.101	±0.101
	Probable	±0.037	±0.027	±0.027	±0.037	±0.057	±0.057
Digital System Error in Process Units	Worst Case	±0.71°F	±2.55°F	±2.27°F	±0.571°F	...	...
	Probable	±0.37°F	±1.35°F	±1.20°F	±0.251°F	...	...
Uncertainty of Process Variable	Worst Case	±1.21°F	±3.05°F	±3.27°F	±1.07°F	±0.251% FR	±0.201% FR
	Probable	±0.62°F	±1.45°F	±1.56°F	±0.56°F	±0.16% FR	±0.115% FR

GENERAL NOTES:
(a) The typical errors given for the various sensors assume that the calibration curves are stored in the digital system and are applied to each reading.
(b) The typical errors assumed for the thermocouple examples include the lead wire error.
(c) The RTD error does not include the RTD bridge circuit and power supply errors since they are included in the digital system error statement.
(d) The typical error assumed for the flow example includes the flow element and differential pressure transducer or equivalent.
(e) The digital system errors stated do not include reference junction error, error due to common mode voltage, or any errors due to ambient variation from the calibration temperature.

Copyright ASME International
Provided by IHS under license with ASME
No reproduction or networking permitted without license from IHS

Not for Resale

On a ±50 mV ranged system, the error is ±0.005%. With a ±10% mV range, the error is ±0.025%.

Summary of Digital System Errors. The typical digital system errors are summarized in Table C5.

OVERALL DIGITAL SYSTEM ERRORS

The overall accuracy of an instrumentation system can be stated in terms of the *probable error (RMS)* or as the *worst case*. The probable error is the square root of the sum of the squares of each of the component errors. The worst case error is the algebraic sum of the absolute values of each of the component errors. The worst case error is obviously too pessimistic, as it is extremely unlikely that all errors would simultaneously be at their maximum and of the same sign. The probable error can be optimistic when the number of error sources is small. In general, the overall system error can be expected to be near the probable error value.

Calculations of probable and worst case errors for various analog input types are shown in Table C6. For these examples, the temperature of the digital system is assumed to be 5°C above the temperature at the time of calibration. Long term drift error is assumed to be zero.

ANALYSIS OF OVERALL SYSTEM ERRORS

Table C7 summarizes the typical errors involved in overall system accuracy. It includes examples of four temperature readings, a flow reading, and a pressure reading. The overall system errors are stated both in percent full range and as an expected variation in the process variable being measured.

OBSERVATIONS

The accuracy of the RTD is much better than the accuracy of the thermocouple because the RTD bridge can be scaled for the desired temperature range and therefore provides a better mV/°F gradient. Also, the RTD bridge does not require a cold reference junction. However, the use of RTDs for testing and continuous performance monitoring is frequently limited by reliability and maintenance considerations.

The error with thermocouple readings varies widely depending upon the digital system range in millivolts used for reading lower temperatures. The example given of reading a chromel-constantan thermocouple with a range of 0–340°F with digital ranges of ±10 and ±50 mV, demonstrates that the ±10 mV range provides better accuracy even though its overall system error in percent full range is worse than the ±50 mV range. Thus, low level signals can be read with the least error when the digital system range is close to the process range. The example also shows that the major contributions to the overall error are the thermocouple, its lead wire, and the cold reference junction.

In summary, this type of analysis demonstrates the need for an understanding of the component error effects in order to obtain the best overall accuracy.

Copyright ASME International
Provided by IHS under license with ASME
No reproduction or networking permitted without license from IHS
Not for Resale

APPENDIX D
REFERENCES[1]

(1) ANSI/ASME PTC 1, General Instructions

(2) ANSI/ASME PTC 2, Definitions and Values

(3) ANSI/ASME PTC 6, Steam Turbines

(4) ASME Supplements on Instruments and Apparatus —

PTC 19.1, Measurement Uncertainty

PTC 19.2, Pressure Measurement

PTC 19.3, Temperature Measurement

PTC 19.5, Application Part II of Fluid Meters

PTC 19.6, Electrical Measurements in Power Circuits

(5) ASME Steam Tables

(6) ASME Orientation and Guide for Use of SI (Metric) Units

(7) ANSI/IEEE 100, Dictionary of Electrical and Electronics Terms

(8) ANSI/IEEE 422, Guide for the Design and Installation of Cable Systems in Power Generating Stations

(9) ANSI/IEEE 518, Guide for the Installation of Electrical Equipment to Minimize Noise Inputs to Controllers from External Sources

(10) ISA Dictionary of Industrial Digital Computer Terminology

(11) ISA Recommended Practice (RP) 55.1, Hardware Testing of Digital Process Computers

(12) NBS Monograph 125, Thermocouple Reference Tables Based on IPTS-68

(13) Hnatek, E. R., *A User's Handbook of D/A and A/D Converters,* New York: John Wiley, 1976

(14) Hoeschele, D. E., *Analog-to-Digital/Digital-to-Analog Conversion Techniques,* New York: John Wiley, 1968

[1] Latest edition.

Copyright ASME International
Provided by IHS under license with ASME
No reproduction or networking permitted without license from IHS

Not for Resale

APPENDIX E
COMMONLY USED CONVERSION FACTORS

Quantity	Conversion	Factor
Plane angle	degree to rad	1.745 329 E−02
Length	in. to m	2.54* E−02
	ft to m	3.048* E−01
	mile to m	1.609 344*E+03
Area	$in.^2$ to m^2	6.451 600*E−04
	ft^2 to m^2	9.290 304*E−02
Volume	ft^3 to m^3	2.831 685 E−02
	US gallon to m^3	3.785 412 E−03
	$in.^3$ to m^3	1.638 706 E−05
	oz (fluid, US) to m^3	2.957 353 E−05
	liter to m^3	1.000 000 E−03
Velocity	ft/min to m/s	5.08* E−03
	ft/sec to m/s	3.048* E−01
	km/hr to m/s	2.777 778 E−01
	mile/hr to m/s	4.470 4* E−01
	mile/hr to km/hr	1.609 344*E+00
Mass	oz (avoir) to kg	2.834 952 E−02
	lb (avoir) to kg	4.535 924 E−01
	slug to kg	1.459 390 E+01
Acceleration	ft/s^2 to m/s^2	3.048* E−01
Force	kgf to N	9.806 65* E+00
	lbf to N	4.448 222 E+00
	poundal to N	1.382 550 E−01
Bending, Torque	kgf-m to N-m	9.806 65* E+00
	lbf-in to N-m	1.129 848 E−01
	lbf-ft to N-m	1.355 818 E+00
Pressure, Stress	kgf/m^2 to Pa	9.806 65* E+00
	$poundal/ft^2$ to Pa	1.488 164 E+00
	lbf/ft^2 to Pa	4.788 026 E+01
	$lbf/in.^2$ to Pa	6.894 757 E+03
Energy, Work	Btu (IT) to J	1.055 056 E+03
	Calorie (IT) to J	4.186 8* E+00
	ft-lbf to J	1.355 818 E+00

Copyright ASME International
Provided by IHS under license with ASME
No reproduction or networking permitted without license from IHS

Not for Resale

COMMONLY USED CONVERSION FACTORS (CONT'D)

Quantity	Conversion	Factor
Power	hp (550 ft-lbf/sec) to W	7.456 999 E+02
Temperature**	°C to K	$t_K = t_{°C} + 273.15$
	°F to K	$t_K = (t_{°F} + 459.67)/1.8$
	°F to °C	$t_{°C} = (t_{°F} - 32)/1.8$
Temperature Interval	°C to K	1.0* E+00
	°F to K or °C	5.555 556 E−01

GENERAL NOTE: The factors are written as a number greater than one and less than ten with six or less decimal places. The number is followed by the letter E (for exponent), a plus or minus symbol, and two digits which indicate to power of 10 by which the number must be multiplied to obtain the correct value.

Example:

1.745 329 E−02 is $1.745\ 329 \times 10^{-2}$ or 0.017 453 29

NOTES:

*Relationships that are exact in terms of the base units.

**°F should be converted to °C. Absolute temperatures should be converted to K.

Copyright ASME International
Provided by IHS under license with ASME
No reproduction or networking permitted without license from IHS

Not for Resale

INSTRUMENTS AND APPARATUS

These supplementary documents give descriptions of, and directions for, the use and calibration of measuring devices likely to be required.

A complete list of ASME publications will be furnished upon request.

SUPPLEMENTS ON INSTRUMENTS AND APPARATUS NOW AVAILABLE

PTC 19.1 — Measurement Uncertainty .....(1985)
PTC 19.2 — Pressure Measurement.....(1964)
PTC 19.3 — Temperature Measurement.....(1974)
(R1985)
PTC 19.5 — Measurement of Quantity of Materials:
19.5.1, Weighing Scales .....(1964)
PTC 19.6 — Electrical Measurements in Power Circuits.....(1955)
PTC 19.7 — Measurement of Shaft Power .....(1980)
PTC 19.8 — Measurement of Indicated Power .....(1970)
(R1985)
PTC 19.10 — Flue and Exhaust Gas Analyses.....(1981)
PTC 19.11 — Water and Steam in the Power Cycle (Purity and Quality, Leak Detection and Measurement).....(1970)
PTC 19.12 — Measurement of Time .....(1958)
PTC 19.13 — Measurement of Rotary Speed .....(1961)
PTC 19.14 — Linear Measurements.....(1958)
PTC 19.16 — Density Determinations of Solids and Liquids.....(1965)
PTC 19.17 — Determination of Viscosity of Liquids .....(1965)
PTC 19.20 — Smoke-Density Determinations.....(1971)
PTC 19.22 — Digital Systems Techniques .....(1986)
PTC 19.23 — Guidance Manual for Model Testing .....(1980)
(R1985)

C05486

Copyright ASME International
Provided by IHS under license with ASME
No reproduction or networking permitted without license from IHS
Not for Resale