N AMERICAN NATIONAL STANDARD

ASME/ANSI
PTC 19.2-1987

REAFFIRMED 1998

FOR CURRENT COMMITTEE PERSONNEL
PLEASE SEE ASME MANUAL AS-11

PART 2

Pressure Measurement

INSTRUMENTS
AND
APPARATUS

REAFFIRMED 2004

FOR CURRENT COMMITTEE PERSONNEL
PLEASE E-MAIL CS@asme.org

Supplement to
ASME

PERFORMANCE
TEST
CODES



THE AMERICAN SOCIETY OF MECHANICAL ENGINEERS
United Engineering Center
345 East 47th Street New York, N.Y. 10017

Copyright ASME International
Provided by IHS under license with ASME
No reproduction or networking permitted without license from IHS

Not for Resale

PART 2

Pressure Measurement

INSTRUMENTS AND APPARATUS

ASME/ANSI PTC 19.2-1987

(REVISION OF PTC 19.2-1964)

THE AMERICAN SOCIETY OF MECHANICAL ENGINEERS
United Engineering Center 345 East 47th Street New York, N.Y. 10017

Copyright ASME International
Provided by IHS under license with ASME
No reproduction or networking permitted without license from IHS
Not for Resale

Date of Issuance: August 15, 1988

This document will be revised when the Society approves the issuance of the next edition, scheduled for 1992. There will be no Addenda issued to ASME/ANSI PTC 19.2-1987.

Please Note: ASME issues written replies to inquiries concerning interpretation of technical aspects of this document. The interpretations are not part of the document. PTC 19.2-1987 is being issued with an automatic subscription service to the interpretations that will be issued to it up to the publication of the 1992 Edition.

ASME is the registered trademark of The American Society of Mechanical Engineers.

This code or standard was developed under procedures accredited as meeting the criteria for American National Standards. The Consensus Committee that approved the code or standard was balanced to assure that individuals from competent and concerned interests have had an opportunity to participate. The proposed code or standard was made available for public review and comment which provides an opportunity for additional public input from industry, academia, regulatory agencies, and the public-at-large.

ASME does not "approve," "rate," or "endorse" any item, construction, proprietary device, or activity.

ASME does not take any position with respect to the validity of any patent rights asserted in connection with any items mentioned in this document, and does not undertake to insure anyone utilizing a standard against liability for infringement of any applicable Letters Patent, nor assume any such liability. Users of a code or standard are expressly advised that determination of the validity of any such patent rights, and the risk of infringement of such rights, is entirely their own responsibility.

Participation by federal agency representative(s) or person(s) affiliated with industry is not to be interpreted as government or industry endorsement of this code or standard.

ASME accepts responsibility for only those interpretations issued in accordance with governing ASME procedures and policies which preclude the issuance of interpretations by individual volunteers.

No part of this document may be reproduced in any form,
in an electronic retrieval system or otherwise,
without the prior written permission of the publisher.

Copyright © 1988 by
THE AMERICAN SOCIETY OF MECHANICAL ENGINEERS
All Rights Reserved
Printed in U.S.A.

Copyright ASME International
Provided by IHS under license with ASME
No reproduction or networking permitted without license from IHS

Not for Resale

FOREWORD

(This Foreword is not part of ASME/ANSI PTC 19.2-1987.)

This Instruments and Apparatus Supplement (PTC 19 Series) to the ASME Performance Test Codes provides information on instrumentation and associated procedures for tests involving measurement of pressure. It is intended to promote results consistent with the best engineering knowledge and practice in industry.

The object and scope of any test should be agreed upon in writing by all parties to the test prior to the test.

ASME/ANSI PTC 2 on Definitions and Values and ASME/ANSI PTC 19.1 on Measurement Uncertainty may be especially useful references when using this Supplement.

This Supplement replaces an older version published in 1964. This edition was approved by the Board on Performance Test Codes on September 23, 1986 and adopted by the American National Standard Institute (ANSI) as an American National Standard on August 25, 1987.

Acknowledgement

The Committee wishes to acknowledge the contribution of past member P. Heydemann of the National Bureau of Standards.

Copyright ASME International
Provided by IHS under license with ASME
No reproduction or networking permitted without license from IHS
Not for Resale

All ASME codes are copyrighted, with all rights reserved to the Society. Reproduction of this or any other ASME code is a violation of Federal Law. Legalities aside, the user should appreciate that the publishing of the high quality codes that have typified ASME documents requires a substantial commitment by the Society. Thousands of volunteers work diligently to develop these codes. They participate on their own or with a sponsor's assistance and produce documents that meet the requirements of an ASME concensus standard. The codes are very valuable pieces of literature to industry and commerce, and the effort to improve these "living documents" and develop additional needed codes must be continued. The monies spent for research and further code development, administrative staff support and publication are essential and constitute a substantial drain on ASME. The purchase price of these documents helps offset these costs. User reproduction undermines this system and represents an added financial drain on ASME. When extra copies are needed, you are requested to call or write the ASME Order Department, 22 Law Drive, Box 2300, Fairfield, New Jersey 07007-2300, and ASME will expedite delivery of such copies to you by return mail. Please instruct your people to buy required test codes rather than copy them. Your cooperation in this matter is greatly appreciated.

Copyright ASME International
Provided by IHS under license with ASME
No reproduction or networking permitted without license from IHS
Not for Resale

PERSONNEL OF ASME PERFORMANCE TEST CODE COMMITTEE NO. 19.2 ON PRESSURE MEASUREMENT

(The following is the roster of the Committee at the time of approval of this Supplement.)

OFFICERS

J. A. Silvaggio, *Chairman*
J. Wyler, *Vice Chairman*
G. Osolsobe, *Secretary*

COMMITTEE PERSONNEL

C. W. Doran, Burr-Brown Corp., Foxboro Co.
T. A. S. Duff, Ametek — US Gauge, Inc.
C. W. Savery, Portland State University, Drexel University
J. A. Silvaggio, Transamerica Delaval, Inc.
J. A. Symonds, Private Consultant, Taylor Instrument Co.
J. S. Wyler, Smiths Industries, General Electric Co.

Copyright ASME International
Provided by IHS under license with ASME
No reproduction or networking permitted without license from IHS
Not for Resale

BOARD ON PERFORMANCE TEST CODES

J. S. Davis, Jr., *Vice President*
W. O. Hays, *Secretary*

A. F. Armor
R. L. Bannister
J. A. Booth
B. Bornstein
W. A. Crandall
H. G. Crim, Jr.
N. R. Deming
J. H. Fernandes
W. L. Garvin
G. J. Gerber
K. G. Grothues
R. Jorgensen
D. R. Keyser
J. E. Kirkland, Jr.
W. G. McLean
J. W. Murdock
S. P. Nuspl
R. P. Perkins
R. W. Perry
A. L. Plumley
J. A. Reynolds
C. B. Scharp
J. W. Siegmund
R. E. Sommerlad
J. C. Westcott

Copyright ASME International
Provided by IHS under license with ASME
No reproduction or networking permitted without license from IHS
Not for Resale

CONTENTS

Foreword iii
Standards Committee Roster v

1 **GENERAL CONSIDERATIONS** 1
1.1 Definitions 1
1.2 Units 2
1.3 Dynamic Measurements 2
1.4 Use of Control and Operating Instrumentation 3
1.5 Two-Phase Fluid Systems 3
1.6 Bibliography 4

2 **PRESSURE STANDARDS** 5
2.1 Inter-Laboratory and Transfer Standards 5
2.2 Working Standards 16

3 **PRESSURE MEASUREMENT DEVICES** 21
3.1 Ranges and Accuracies 21
3.2 Piston Gages 25
3.3 Manometers 28
3.4 Pressure Transmitters 32
3.5 Low Absolute-Pressure (Vacuum) Sensors 55
3.6 Elastic Gages 65
3.7 Special Applications of ΔP Cells 73

4 **PRESSURE MEASUREMENT INSTALLATIONS** 95
4.1 Pressure Taps 95
4.2 Pressure Probes 96
4.3 Connecting Piping 102
4.4 Diaphragm Seals 107
4.5 Installation Effects 114
4.6 Uncertainties in Pressure Measurement 116

5 **REFERENCES** 117

Figures

1.1 Basic Pressure Terms 2
2.1 Pressure Measurement Calibration Hierarchy 6
2.2 Schematic Distortion of Piston and Cylinder in a Simple Piston Gage 7
2.3 Simple Cylinder Piston Gage 8
2.4 Re-entrant Cylinder Piston Gage 9

Copyright ASME International
Provided by IHS under license with ASME
No reproduction or networking permitted without license from IHS
Not for Resale

2.5	Gage Governed by the Controlled Clearance Principle	9
2.6	General Principle of All Manometers	12
2.7	Errors in Column Height Determination (Manometer Tilted by Angle θ About a Horizontal Axis Through the Manometer Tubes)	12
2.8	Errors in Column Height Determination (Manometer Tilted by Angle ϕ in the Plane of the Tubes)	14
2.9	Differential Pressure Transducer Connected to the Manometer	14
2.10	McLeod Vacuum Manometer	17
2.11	Pivoting McLeod Vacuum Gage	18
3.1	Simple Cylinder Piston Gage	27
3.2	Re-entrant Cylinder Piston Gage	28
3.3	Controlled-Clearance Cylinder Piston Gage	29
3.4	Pneumatic Deadweight Ball Gage	29
3.5	Absolute Pressure Piston Gage	30
3.6	Vacuum Piston Gage	30
3.7	Piston Gage Measurement With a Diaphragm Separator	31
3.8	U-Tube Manometer for Absolute Pressure	31
3.9	U-Tube Manometer for Differential Pressure	31
3.10	Cistern Manometer	32
3.11	Inclined Manometer	32
3.12	Micromanometer (Null Reading)	33
3.13	Fortin Barometer	34
3.14	Bell-Type Element	36
3.15	Slack Diaphragm	36
3.16A	Schematic of a Pneumatic Force Balance Differential Pressure Transmitter	38
3.16B	Schematic of a Pneumatic Force Balance Tape Drive Servo	39
3.17	Schematic of an Electronic Force Balance Differential Pressure Transmitter	40
3.18	Typical Nozzle Baffle System	40
3.19	Nozzle Backpressure Versus Gap for an Elementary Nozzle Baffle	41
3.20	Schematic Representation of a Double-Sided Variable Capacitance Sensor Head	43
3.21	Schematic Representation of a Single-Sided Variable Capacitance Sensor Head	44
3.22	Inductive Displacement Detector	45
3.23	Preferred Schematic Representation of the LVDT	45
3.24	LVDT Used as a Pressure Transducer	46
3.25	Potentiometric Detector	48
3.26	Strain Gage	48
3.27	Wheatstone Bridge Configuration of the Strain Gage	49
3.28	Full-Bridge Diaphragm Gage	50
3.29	Pressure Transducer With Vibrating Element	50
3.30	Piezoelectric Pressure Transducer	52
3.31	Conventional Piezoelectric System	52
3.32	Charge System	53
3.33	Basic ICP Transducer	54
3.34	Operating Ranges for Pressure Switches	54
3.35	Hickman Vacuum Gage	56
3.36	Diaphragm Pressure Comparator	57
3.37	McLeod Gage	60

Copyright ASME International
Provided by IHS under license with ASME
No reproduction or networking permitted without license from IHS
Not for Resale

3.38	Thermocouple Gage	60
3.39	Pirani Vacuum Gage	61
3.40	Bayard-Alpert Ionization Gage	63
3.41	Phillips-Penning Gage	63
3.42	Ionization Chamber of Alphatron Gage	65
3.43	Langmuir-Dushman Molecular Gage	66
3.44	Bourdon Gage	68
3.45	Bourdon Tubes	68
3.46	Bellows Gage	69
3.47	Slack Diaphragm Gage	69
3.48	Flow Installation	75
3.49	Schematic of Differential-Pressure Transmitter Primary for Flow Measurement	76
3.50	Schematic Diagram of Open-Tank Transmitter Primary	78
3.51	Open-Tank Installation With Transmitter Mounted Directly to Tank Nozzle	79
3.52	Open-Tank Installations With Remote Seal Type of Transmitter	80
3.53	Schematic Diagram of Closed-Tank Transmitter Primary	81
3.54	Closed-Tank Installation, Dry Leg	82
3.55	Closed-Tank Installation, Dry Leg Transmitter Above Datum Line	83
3.56	Closed-Tank Installation, Dry Leg Transmitter Below Datum Line	84
3.57	Closed-Tank Installation, Wet Leg	85
3.58	Closed-Tank Installation, Wet Leg Transmitter Above Datum Line	86
3.59	Closed-Tank Installation, Wet Leg Transmitter Below Datum Line	87
3.60	Closed-Tank Installation, Dry Leg Transmitter Above Upper Process Tap	88
3.61	A "Repeater" Type Level Measuring Device	90
3.62	Hydrostatic Head Provides One Method of Density Measurement	92
3.63	Differential Hydrostatic Head Increases Sensitivity of Density Measurement	92
3.64	Common Method of Measuring Density of a Process Liquid	93
4.1	Pressure Tap Flow Field	95
4.2	Tap Geometry	96
4.3	Errors for Different Size Taps in Fully Developed Pipe Flow	97
4.4	Relative Tap Errors as Percent of Dynamic Pressure	98
4.5	Impact Tube	99
4.6	Variation of Total Pressure Indication With Angle of Attack and Geometry for Pitot Tubes (After NACA TN 2331, April 1951)	100
4.7	Kiel Probe	101
4.8	Total Pressure Location on a Cylinder in a Flow Field	101
4.9	Static Tube	103
4.10	Pitot-Static Tube	103
4.11	Cylindrical Probe, Principle of Operation	104
4.12	Wedge-Type Probe	105
4.13	Spherical and Cone Type Probes	105
4.14	Basket Probe	106

Copyright ASME International
Provided by IHS under license with ASME
No reproduction or networking permitted without license from IHS
Not for Resale

4.15 Basket Probe With a Pressure Transducer . . . 106
4.16 Magnitude of Probe-Blockage Effects . . . 108
4.17 Magnitude of Probe-Blockage Effects . . . 109
4.18 Typical Pressure Gage Piping Arrangement . . . 110
4.19 Differential Pressure Cross Connection . . . 110
4.20 Tube Configuration Used in Frequency Calculation . . . 110
4.21 Remote Seal With Measuring Element for a Gage Pressure Transmitter . . . 111
4.22 Remote Seal With a Pressure Gage . . . 111
4.23 Remote Seals for Use With a Differential Pressure Transmitter . . . 112
4.24 Transducer Setup . . . 114
4.25 Temperature Distributions in Connecting Tubing . . . 115
4.26 Flow Measurement Transducer Application . . . 115

Tables

1.1 Pressure Conversion Factors [3, 4] . . . 3
2.1 Pressure Coefficient *b* [6] . . . 8
2.2 Density of Manometer Fluids . . . 10
2.3A Density, Thermal Expansion, and Vapor Pressure of Water Versus Temperature in °C (IPTS-68) . . . 13
2.3B Density, Thermal Expansion, and Vapor Pressure of Mercury Versus Temperature in °C (IPTS-68) . . . 13
2.4 Capillary Depression in Mercury in Glass Manometers (Surface Tension: 0.45 N/m) . . . 15
3.1 Summary of Pressure-Measuring Device Characteristics . . . 22
3.2 Sensing Elements . . . 26
3.3 Vacuum Measurement Units . . . 58
3.4 Recording of Gage-Test Data Sample . . . 74
3.5 Seal Fluid Selection Chart . . . 89
3.6 Type of Calibration Required for Various Applications . . . 91
3.7 Variations in Density for Different Liquids . . . 94

Appendices

A Tables of Corrections and Gravity Data . . . 119
B Commonly Used Unit Conversion Factors . . . 133

Tables

A1 Corrections for Temperature to be Applied to Observed Height of Mercury Columns (Assuming Brass Scale is True at 32°F) . . . 121
A2 Corrections for Temperature to be Applied to Observed Height of Mercury Columns (Assuming Brass Scale is True at 62°F) . . . 123
A3 Difference Between g_1, the Gravitational Acceleration at Mean Sea Level for Given Latitude 0, and Standard Gravitational Acceleration $g_0 = 32.1740$ ft/sec^2. Table Gives $(g_1 - g_0)$ as a Function of Latitude . . . 125
A4 Free-Air Gravity Correction $C_f = 0.000003086$ H ft/sec^2, Where Barometer Elevation H is in Feet Above Mean Sea level. Correction C_f is to be Subtracted from $(g_1 - g_0)$ . . . 126
A5 Correction of Height of Column to Standard Gravity B $(g_1 - g_0)/g_0$ . . . 127
A6 Gravity Data . . . 128
B1 Commonly Used Unit Conversion Factors . . . 133

--`,,`,,`-`-`,,`,,`,`,,`---

Copyright ASME International
Provided by IHS under license with ASME
No reproduction or networking permitted without license from IHS
Not for Resale

AN AMERICAN NATIONAL STANDARD

ASME PERFORMANCE TEST CODES
Supplement on
INSTRUMENTS AND APPARATUS
PART 2
PRESSURE MEASUREMENT

SECTION 1 — GENERAL CONSIDERATIONS

The thermodynamic state of a simple fluid is specified by two independent properties. In experiments involving fluids, pressure is customarily selected as one of the properties to be measured. Pressure measurements are also important in systems involving flowing fluids as an indirect means of measuring velocity and flow rate.

Relevant static and dynamic pressures span a range of 10^{-15} to 10^{7} times atmospheric pressure. As such, and because of associated dynamic pressure-measurement problems, pressure-measurement systems vary greatly in complexity and include a large number of different devices.

This Section covers the definition of pressure, fundamental thermodynamic and fluid-mechanic concepts of pressure, pressure units and conversion among different units, pressure considerations in and pressure relations for flowing fluids, and the use of existing installed instrumentation in equipment tests.

1.1 DEFINITIONS

pressure — force per unit area exerted by a fluid on a containing wall with respect to a reference

absolute pressure — force per unit area exerted by a fluid on a containing wall with respect to zero absolute pressure. Absolute pressure can be positive only (see Fig. 1.1).

ambient pressure — force per unit area exerted by the atmosphere at a location (usually local barometric pressure) (see Fig. 1.1)

differential pressure — difference between any two pressures (see Fig. 1.1)

gage pressure — force per unit area exerted by a fluid on a containing wall with respect to local ambient pressure. Gage pressure can be either positive or negative. Common practice is to refer to negative gage pressure as "vacuum" (see Fig. 1.1).

static pressure — pressure at a point where a fluid element is in equilibrium

total pressure — pressure on a plane normal to local flow direction. It is the maximum value of pressure as a function of direction at a point. It is equal to the summation of static pressure and velocity pressure.

velocity pressure (for a flowing fluid) — expressed as $\frac{1}{2}\varrho V^2$ where ϱ is the fluid density and V is the fluid velocity; also called *dynamic pressure*. Velocity pressure (or head) is the net pressure increase that can be derived from complete conversion of the velocity (or dynamic energy) to pressure.

energy relationships — the steady-state microscopic one-dimensional conservation of energy equation (along a streamline in an irrotational steady flow) is

$$\frac{1}{2}(V_2^2 - V_1^2) + \int_{P_1}^{P_2} \frac{dP}{\varrho} + g(Z_2 - Z_1) = 0 \quad (1\text{-}1)$$

Copyright ASME International
Provided by IHS under license with ASME
No reproduction or networking permitted without license from IHS
Not for Resale

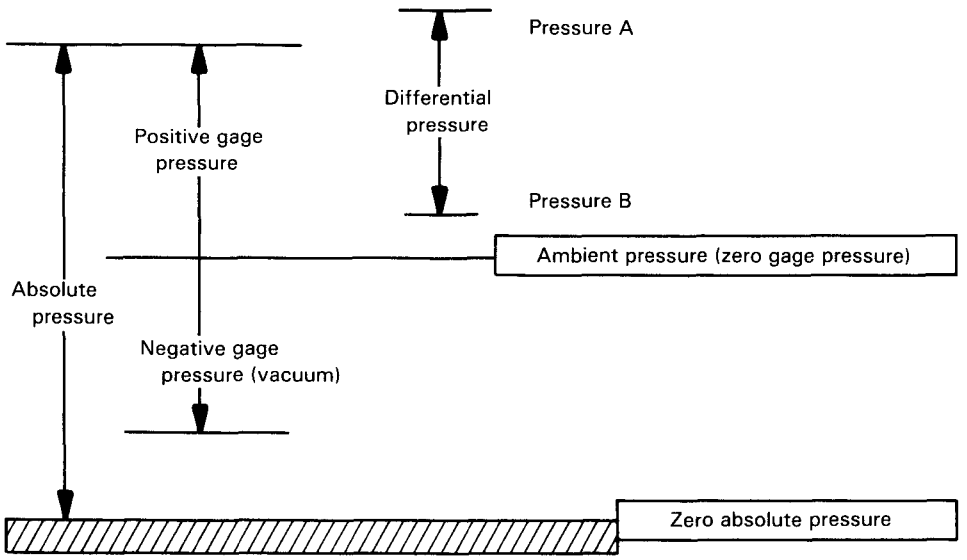

FIG. 1.1 BASIC PRESSURE TERMS

Equation (1-1) applies to the flow of a frictionless fluid with no mechanical work performed on or by the surroundings, constant velocities, and a constant gravitational acceleration g. In Eq. (1-1) the fluid has velocity V, pressure P, density ϱ, and elevation Z. The subscript number denotes a position and corresponding fluid state.

For the special case of an incompressible fluid, Eq. (1-1) reduces to the Bernoulli Equation

$$\frac{1}{2}(V_2^2 - V_1^2) + \frac{1}{\varrho}(P_2 - P_1) + g(Z_2 - Z_1) = 0 \quad (1\text{-}2)$$

In manometry, the fluid is static and the kinetic energy term vanishes. Then the sum of the second term, pressure head, and the third term, elevation head, is a constant.

In a flowing system, the rise of the first term in Eq. (1-2), velocity head, involves a corresponding decrease in either elevation head and/or static-pressure head. Thus, after a flow-area contraction, the velocity head is necessarily increased to accommodate the constant mass flow, and consequently the static pressure is reduced. After a flow expansion at subsonic flow velocities, the static pressure is increased. In each case, the total pressure is the same before and after the area change, except for frictional losses, which would increase temperature and internal energy at the expense of mechanical energy.

1.2 UNITS

The International System of Units (SI) will be used in this publication with U.S. customary units in parentheses.

A list of symbols used in this work, with the corresponding dimensions and conversion factors used to convert from the absolute engineering to the SI system, are given in Ref. [2].

Pressure is expressed in units of pascal, Pa, which is equivalent to newtons/meter^2. Conversion factors for commonly used pressure units are given in Table 1.1 [3, 4].

The International Standard Atmosphere is 760 mm (29.921 in.) of mercury at 0°C (32°F). In SI units this is 101.325 kPa (14.69595 lbf/in.^{2}) at the standard gravitational acceleration of 9.806650 m/sec^2 (32.17406 ft/sec^2).

1.3 DYNAMIC MEASUREMENTS

1.3.1 Fluctuating Pressure. In many situations in test work, flows are unsteady; that is, velocity and pressure vary with time, either cyclically or as random fluctuations. It is usually necessary to determine the true average pressure in order to evaluate the time average energy of the stream. The best way to do this is to reduce the causes of pressure fluctuation to negligible proportions.

Copyright ASME International
Provided by IHS under license with ASME
No reproduction or networking permitted without license from IHS
Not for Resale

TABLE 1.1
PRESSURE CONVERSION FACTORS [3,4]

Conversion		Multiplication
From	To	Factor
atmosphere (normal = 760 torr)	pascal (Pa)	1.013 25 E+05
atmosphere (technical = 1 kg_f/cm^2)	pascal (Pa)	9.806 650 E+04*
bar	pascal (Pa)	1.000 000 E+05*
centimeter of mercury (0°C)	pascal (Pa)	1.333 22 E+03
centimeter of water (4°C)	pascal (Pa)	9.806 38 E+01
decibar	pascal (Pa)	1.000 000 E+04*
dyne/$centimeter^2$	pascal (Pa)	1.000 000 E-01*
foot of water (39.2°F)	pascal (Pa)	2.988 98 E+03
gram-force/$centimeter^2$	pascal (Pa)	9.806 650 E+01*
inch of mercury (32°F)	pascal (Pa)	3.386 389 E+03
inch of mercury (60°F)	pascal (Pa)	3.376 85 E+03
inch of water (39.2°F)	pascal (Pa)	2.490 82 E+02
inch of water (60°F)	pascal (Pa)	2.488 4 E+02
inch of water (68°F)	pascal (Pa)	2.486 4 E+02
kilogram-force/$centimeter^2$	pascal (Pa)	9.806 650 E+04*
kilogram-force/$meter^2$	pascal (Pa)	9.806 650 E+00*
kilogram-force/$millimeter^2$	pascal (Pa)	9.806 650 E+06*
kip/$inch^2$ (ksi)	pascal (Pa)	6.894 757 E+06
millibar	pascal (Pa)	1.000 000 E+02*
millimeter of mercury (0°C)	pascal (Pa)	1.333 224 E+02
poundal/$foot^2$	pascal (Pa)	1.488 164 E+00
pound-force/$foot^2$	pascal (Pa)	4.788 026 E+01
pound-force/$inch^2$ (psi)	pascal (Pa)	6.894 757 E+03
psi	pascal (Pa)	6.894 757 E+03
torr (mm Hg 0°C)	pascal (Pa)	1.333 224 E+02

NOTE:
*Relationships that are exact in terms of the base units.

Where this cannot be done, two methods of obtaining an average are possible. First, the pressure instrument may be damped sufficiently to give a value which is only fluctuating slightly and therefore easily readable. This gives a true average only if the instrument response is linearly proportional to the pressure signal and if the damping forces are linearly proportional to pressure. This linearity may be closely approximated by a porous-plug type of damper in the pipe.

Second, a graphic instrument or digital storage-and-processing unit capable of responding to frequencies greater than the maximum frequency of pressure fluctuation may be selected. The graphic or digital record of pressure as a function of time can then be analyzed to yield a true average. In many cases, this can be accomplished by a display instrument, such as a cathode-ray oscilloscope. The average can often be estimated visually with sufficient accuracy or the display may be photographed and analyzed as a graphic record.

Alternatively, digital processing may be directly employed to yield a true average.

1.3.2 Fluctuating Flow. When pressure measurements are taken for the purpose of evaluating flow rate as in flowmeter work, it should be realized that average pressure does not correspond to average flow rate (this is due to the square-law relation between velocity and velocity pressure). To obtain a true average flow rate, it may be necessary to obtain a graphic record of velocity pressure with a high-frequency-response instrument, derive from this a curve of the square root of velocity pressure and use the average of this square-root curve to calculate velocity. It is possible to carry out this process automatically by electronic methods when an electronic pressure-transducer is the primary element. However, the error encountered may be shown to be negligibly small under some conditions and thus ignored.

1.4 USE OF CONTROL AND OPERATING INSTRUMENTATION

Equipment to be tested may be provided with pressure instrumentation, pressure connections, and gages for either control or operating information. It may be necessary or desirable for the test engineer to utilize this instrumentation. However, the precision and accuracy of the installed instrumentation should be considered in designing a test. Separate calibration of installed pressure-measurement systems may be desirable. When doubts exist about the accuracy and precision of installed instrumentation, provision of alternate test instrumentation is recommended.

1.5 TWO-PHASE FLUID SYSTEMS

Many applications require pressure measurement in two-phase fluid systems [5]. In these applications, care must be exercised to avoid problems due to pumping of multiphase fluid into instrument lines, static-liquid head-pressure contributions, and vapor-pressure interference. Although such problems are more difficult with differential-pressure measurement, they are mitigated by keeping the instrument lines full of either phase (e.g., the liquid phase) or by employing pressure transducers directly mounted to the measurement port. Techniques of liquid purging, or, in the case of single-component systems, cooling the instrument lines to cause condensation of entering vapor, are used to maintain a liquid phase in the lines. Purging is also used to maintain air or other suitable gas in the lines for some two-phase measurements.

--`,,`,,`-`-`,,`,,`,`,,`---
Copyright ASME International
Provided by IHS under license with ASME
No reproduction or networking permitted without license from IHS
Not for Resale

1.6 BIBLIOGRAPHY

(1) Beckwith, T. G., and Buck, N. L., "Mechanical Measurements," Third Edition, Chapter 14, Reading: Addison-Wesley, 1981.

(2) Bird, R. B., Stewart, W. E., and Lightfoot, E. N., "Transport Phenomena," New York: John Wiley & Sons, 1960, pp. 4-5.

(3) Holman, J. P., and Gajda, W. J., "Experimental Methods for Engineers," Third Edition, New York: McGraw-Hill, 1978, pp. 51-55.

(4) Schlichting, H., "Boundary-Layer Theory," Seventh Edition, New York: McGraw Hill, 1978, pp. 49-52.

Copyright ASME International
Provided by IHS under license with ASME
No reproduction or networking permitted without license from IHS
Not for Resale

SECTION 2 — PRESSURE STANDARDS

All pressure measurements are ultimately referred to devices which serve as primary standards of pressure measurements. These, in turn, can be calibrated in terms of the basic units of mass, length, and time. In order of decreasing pressure, the most important primary pressure standards are: the piston gage, the manometer, and the McLeod gage. From these devices, pressure values are transferred to the point of use, often through long calibration chains, using various types of gages and transducers. Most of the uncertainty of pressure measurements at the point of use comes from errors accumulated in the transfer of the measurement along a calibration chain and not from the primary standard. For the purpose of estimating uncertainty, or when particularly accurate measurements are intended, attention must be paid to the propagation of measurement and associated errors along the calibration chain.

To demonstrate traceability of measurements to the National Bureau of Standards (NBS), it is necessary to establish calibration hierarchies. Each level in the hierarchy, including that corresponding to NBS, constitutes an error source which contributes to the error in the final measurement. Figure 2.1 is a typical pressure transducer hierarchy.

Calibration of measurement instruments at NBS is possible; however, such calibrations can be time consuming, inconvenient, and expensive. Most industrial working standards are referred to inter-laboratory or transfer standards.

This Section contains brief descriptions of the operating principles of devices which serve as inter-laboratory and transfer standards.

2.1 INTER-LABORATORY AND TRANSFER STANDARDS

2.1.1 Piston Gages. A piston gage, also called a deadweight tester or pressure balance, consists essentially of a cylinder and a well-fitted piston. (See paras. 2.2.1 and 3.2 for further discussion of piston gages.) The pressure to be measured is connected into the cylinder. The pressurized fluid in the cylinder exerts a force $F = pA$ on the piston, where A is the effective area of the piston. By balancing this force F with the weight of a number of masses loaded on to the piston, the pressure p can be determined provided that the effective area A and its change with pressure and temperature are known. If all parameters entering into the determination of a pressure with a piston gage are considered, one arrives at the following equation [6]

$$p = \frac{\sum_{i=1}^{n} M_i g \left(1 - \frac{\varrho_{air}}{\varrho_{M_i}}\right) + \gamma C + N}{A_o (1 + bp)\,[1 - (\alpha_c + \alpha_p)(T - T_r)]} \qquad (2\text{-}1)$$

where

p = pressure at the reference level of the piston gage
M_i = mass of weight i
g = local acceleration due to gravity
ϱ_{air} = density of the ambient air
ϱ_{M_i} = density of weight i
γ = surface tension of the pressure-transmitting fluid
C = circumference of the piston where it emerges from the fluid
N = tare weight
A_o = effective area of the piston gage, determined at atmospheric pressure and reference temperature
b = pressure coefficient of the effective area
α_c, α_p = linear thermal expansivities of the cylinder and of the piston
T = gage temperature
T_r = reference temperature for which the effective area A_o is accurately known

In order to determine the effective area of a piston gage, one may either directly measure the area of the cylinder and that of the piston near the line of minimum clearance, provided one has an adequate dimensional metrology laboratory, or simply compare the piston gage with a primary pressure standard. Likewise, the elastic distortion coefficient b may either be calculated from elastic theory or from comparison with a primary standard. Figure 2.2 shows schematically the

Copyright ASME International
Provided by IHS under license with ASME
No reproduction or networking permitted without license from IHS
Not for Resale

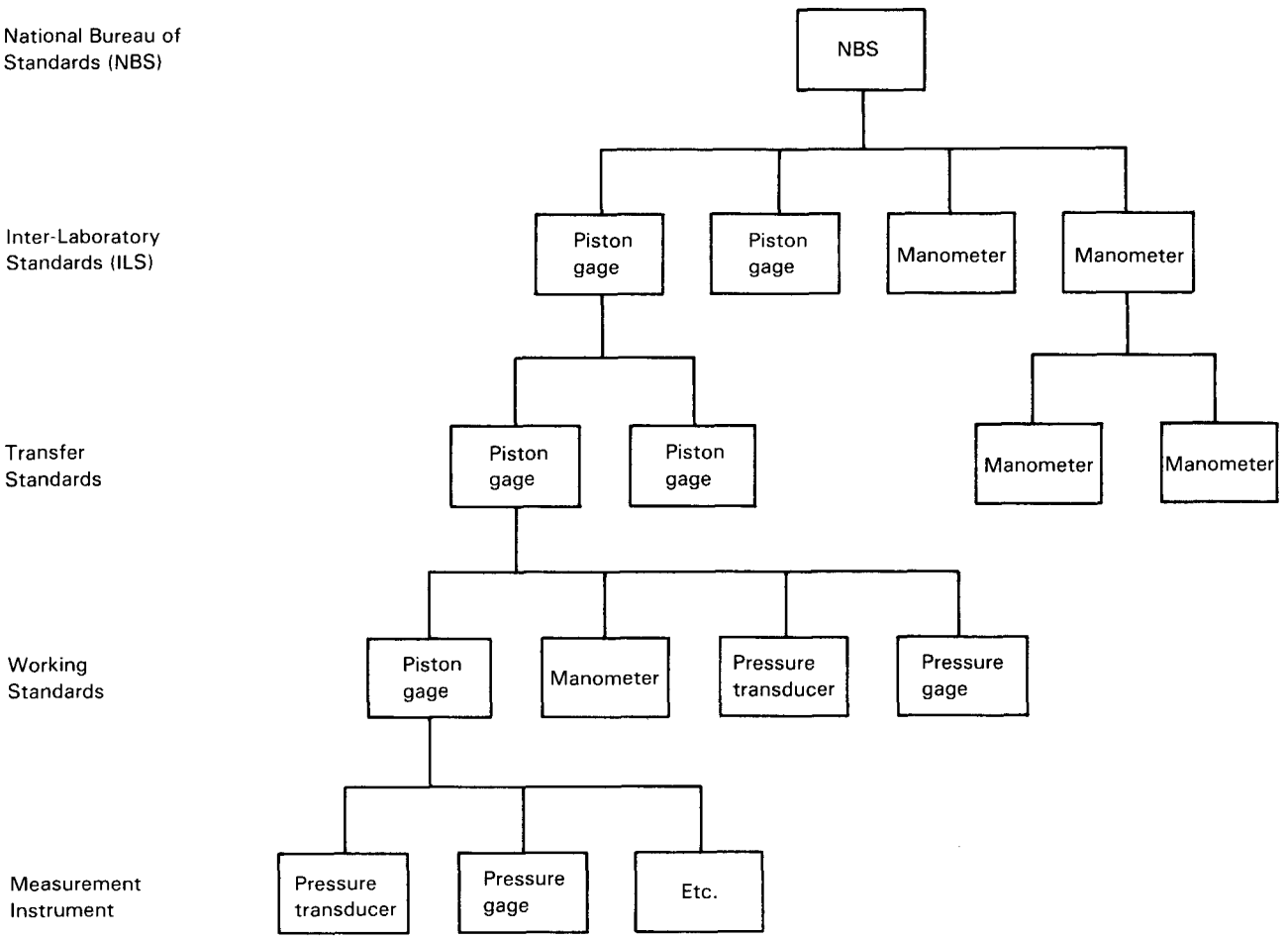

FIG. 2.1 PRESSURE MEASUREMENT CALIBRATION HIERARCHY

Copyright ASME International
Provided by IHS under license with ASME
No reproduction or networking permitted without license from IHS
Not for Resale

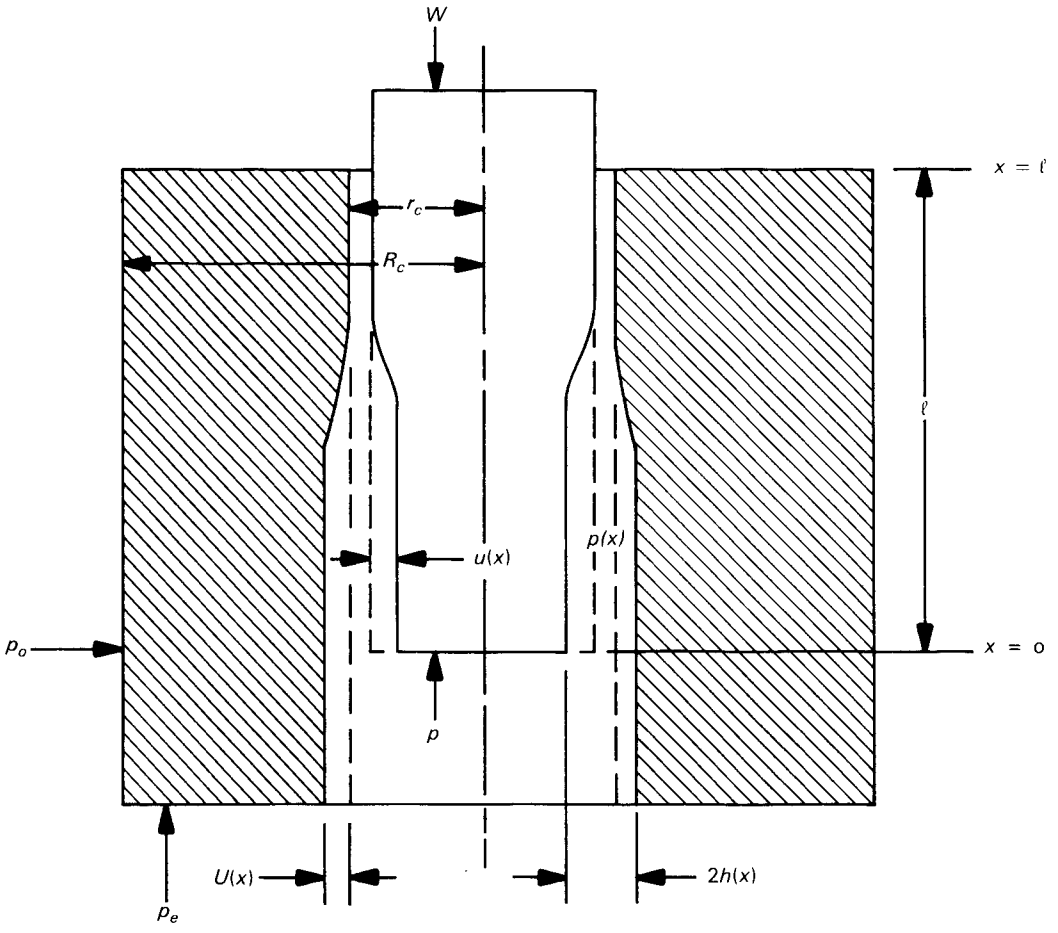

FIG. 2.2 SCHEMATIC DISTORTION OF PISTON AND CYLINDER IN A SIMPLE PISTON GAGE

distortion of piston and cylinder in a simple piston gage. From elasticity theory for infinitely extended hollow and solid cylinders, the following equation for the elastic distortion coefficient b may be derived [7]

$$b = -\frac{1-3\,\mu_p}{2E_p} + \frac{(1+\mu_c)\,R_c^{\,2} + (1-\mu_c)\,r_c^{\,2}}{2E_c\,(R_c^{\,2} - r_c^{\,2})} \qquad (2\text{-}2)$$

piston distortion

cylinder distortion due to internal pressure

$$-\frac{p_o}{pE_c}\,\frac{2R_c^{\,2}}{R_c^{\,2} - r_c^{\,2}} + \frac{p_e}{p}\,\frac{\mu_c}{E_c}$$

cylinder distortion due to external pressure

cylinder distortion due to end loading

where

R_c and r_c = outer and inner radii of the cylinders
μ_c and μ_p = Poisson's ratios of the cylinder and piston materials
E_c and E_p = Young's moduli of the cylinder and piston materials
p = pressure inside the cylinder
p_e = pressure on the ends of the cylinder
p_o = pressure on the outside of the cylinder

For an assembly made of steel with $E = 2 \times 10^{11}$ N/m^2, $\mu = 0.28$, and $R_c/r_c = 3$, we have for the pressure coefficient

$$b = -4 \times 10^{-13} + 38 \times 10^{-13} - 112 \times 10^{-13}\,\frac{p_o}{p}$$

$$+ 14 \times 10^{-13}\,\frac{p_e}{p} = -64 \times 10^{-13}\,\frac{p_e}{p}\ [\text{m}^2/\text{N}]$$

Copyright ASME International
Provided by IHS under license with ASME
No reproduction or networking permitted without license from IHS
Not for Resale

TABLE 2.1
PRESSURE COEFFICIENT *b* [6]
(Courtesy of Pergamon Press, Ltd.)

Pressure Coefficient, 1/kPa	Piston/Cylinder Material	Pressure Range, kPa	Cylinder Type
$+1.1 \times 10^{-8}$	Steel/brass	17000	Simple
-1.3×10^{-8}	Steel/brass	70000	Re-entrant
$+5.2 \times 10^{-9}$	Steel/steel	34000	Simple
-6.4×10^{-9}	Steel/steel	83000	Re-entrant
-8.1×10^{-9}	Carbide/steel	17000	Re-entrant
-6.1×10^{-9}	Carbide/steel	83000	Re-entrant
-2.9×10^{-9}	Carbide/carbide	28000	Re-entrant
-5.1×10^{-10}	Tungsten/carbide	. . .	Controlled clearance

Two facts are obvious: (1) the distortion of the piston is usually very small, and (2) the total distortion of the cylinder can be reduced to zero by an appropriate adjustment of p_o, the pressure applied to the outside of the cylinder.

Piston gage designs commonly incorporate three types of cylinders: simple cylinder, re-entrant cylinder, and controlled-clearance cylinder.

(a) Simple Cylinder Piston Gage. A schematic diagram of a simple cylinder piston gage is shown in Fig. 2.3. Force is applied to the head of the piston either directly or through an auxiliary piston and a flexible point to prevent imparting of a bending moment to the gage piston. The operating area of the assembly is removed by several diameters from the lower part of the cylinder, which is distorted by making a pressure seal. The cylinder is stressed only by the pressure inside the crevice and the pressure coefficient of the assembly is positive. Table 2.1 lists examples of experimentally determined pressure coefficients for piston gages of this and other types [6].

(b) Re-entrant Cylinder Piston Gage. Simple cylinder piston gages are limited in their range of operating pressures by the excessive leakage of pressure fluid past the piston at high pressures. Inspection of Eq. (2-2) shows that if pressure is applied to the outside and to the end of the cylinder, the inner diameter of the cylinder may actually decrease faster with pressure than the diameter of the piston, thus reducing the clearance at high pressures to zero.

Figure 2.4 shows a cross section through a re-entrant cylinder where most of the outside of the cylinder is exposed to pressure [6].

(c) Controlled-Clearance Cylinder Piston Gage. Equation (2-2) is derived for infinitely extended pistons, a condition that cannot be realized in practice for

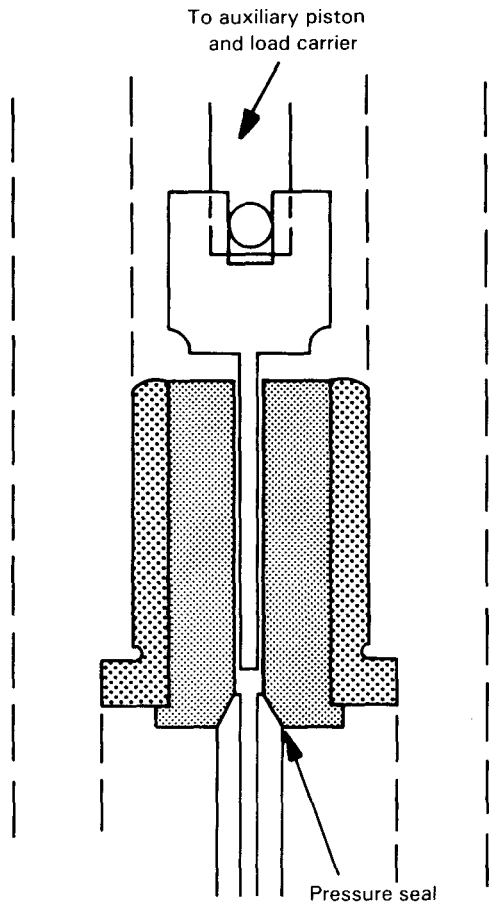

FIG. 2.3 SIMPLE CYLINDER PISTON GAGE

the cylinder but which holds sufficiently well for the piston. If the external pressure p_o were used to make the cylinder conform to the piston, then we would need to determine the area and calculate only the distortion of the piston. This is called the "controlled clearance principle" and the design of such a gage is illustrated in Fig. 2.5. In practice one cannot force the cylinder to completely conform to the piston. The external "jacket" pressure p_j has to be reduced slightly below the pressure p_z at which the clearance between piston and cylinder is zero, in order to allow the piston to move. The determining equation for the pressure generated or measured by a controlled clearance piston gage then is given by [6]

$$p = \frac{\sum_{i=1}^{n} M_i g \left(1 - \frac{\varrho_{air}}{\varrho_{M_i}}\right) + \gamma C}{A_o (1 + b_p p)[1 + (\alpha_c + \alpha_p)(T - T_r)][1 + d(p_z - p_j)]} \quad (2\text{-}3)$$

Copyright ASME International
Provided by IHS under license with ASME
No reproduction or networking permitted without license from IHS
Not for Resale

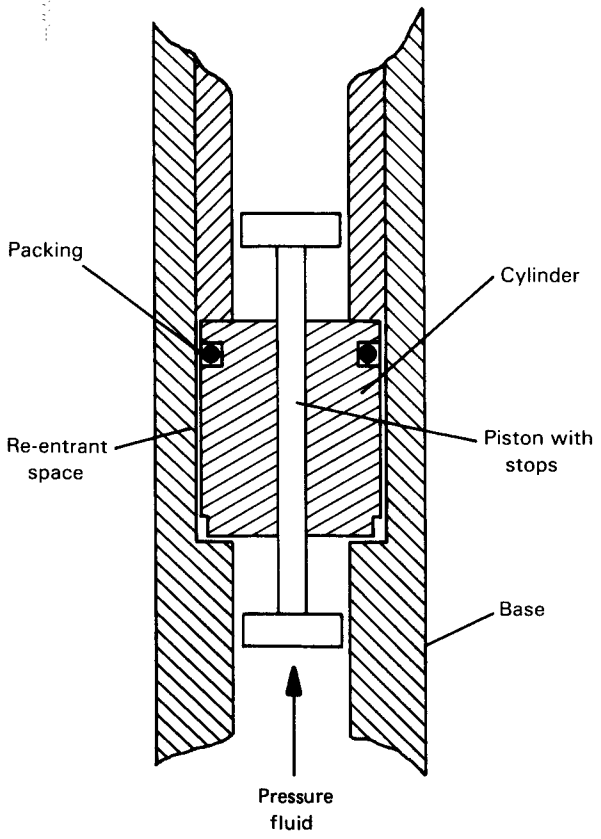

FIG. 2.4 RE-ENTRANT CYLINDER PISTON GAGE

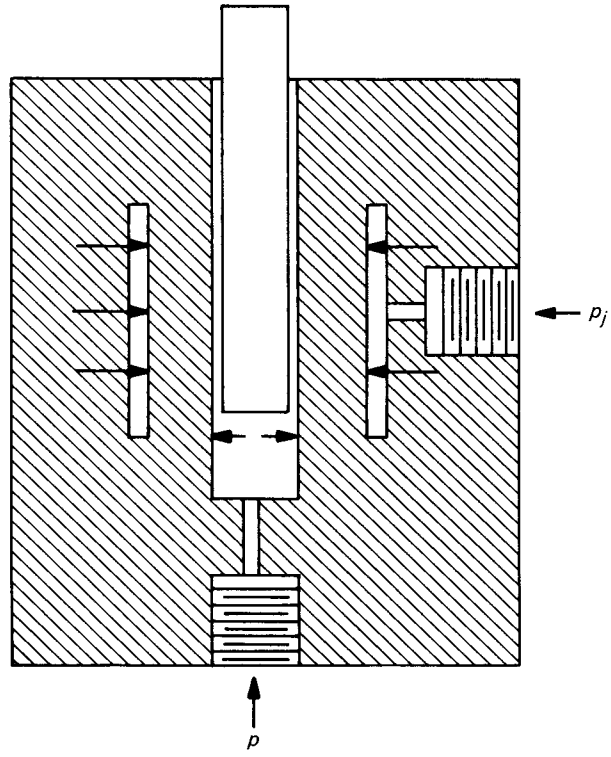

FIG. 2.5 GAGE GOVERNED BY THE CONTROLLED CLEARANCE PRINCIPLE

In the denominator

A_o = area of the piston
b_p = pressure coefficient of the area of piston
d = jacket pressure coefficient
p_z = jacket pressure that reduces the clearance to zero
p_j = operating jacket pressure

The terms in the numerator and the temperature term in the denominator are the same as in Eq. (2-1).

All of the terms of Eq. (2-3) can be determined by direct measurement, except for d and p_z, which require more involved procedures for their determination. The calibration of controlled-clearance piston gages is described in detail in Ref. [6].

The National Bureau of Standards maintains a group of controlled-clearance piston gages covering the pressure range from about 35 kPa (5 psi) to 1.4 GPa (200,000 psi). These gages define the pressure scales in the United States, and they are used to provide calibration services for American industry and government agencies.

2.1.2 Manometers. Manometers measure an unknown pressure by balancing it against the weight of a column of liquids. Since the weight of the liquid column can often be measured in terms of the basic units of mass and length, certain types of manometers can be considered to be primary standards of pressure measurement [8]. See paras. 2.2.2 and 3.3 for further discussion of manometers.

Figure 2.6 illustrates the principle used in all manometers: two vertical tubes are connected at the bottom. The tubes are filled with a liquid of known density. Pressures p_1 and p_2 are applied at the liquid menisci. The horizontal connection at the bottom of the tubes does not contribute to the pressure generated by the manometer regardless of the density of the fluid contained in it. We arbitrarily measure the column heights H_1 and H_2 from this level. p_o is the pressure in the connection. At the bottom of column 1:

$$p_o = g\varrho_1 H_1 + p_1 \qquad (2\text{-}4)$$

Copyright ASME International
Provided by IHS under license with ASME
No reproduction or networking permitted without license from IHS
Not for Resale

where

g = local acceleration due to gravity
ϱ_1 = average density of the liquid in this column
H_1 = height of the column
p_1 = known reference pressure (usually atmospheric pressure)

At the bottom of column 2

$$p_o = g\varrho_2 H_2 + p_2 \qquad (2\text{-}5)$$

where

ϱ_2 = average density of the liquid in this column
H_2 = height of the column
p_2 = unknown pressure

The unknown pressure p_2 is derived from Eqs. (2-4) and (2-5) to be

$$p_2 = g(\varrho_1 H_1 - \varrho_2 H_2) + p_1 \qquad (2\text{-}6)$$

The various terms in this equation require further discussion.

2.1.2.1 Local Acceleration Due to Gravity g [m/sec^2]. For the most accurate measurements, the National Oceanographic and Atmospheric Administration — Gravity, Astronomy and Satellites Branch, will provide gravity data extrapolated to the latitude, longitude, and elevation of the manometer site. The uncertainty of this value will also be stated.

2.1.2.2 Density ϱ [kg/m^3]. Among the manometer fluids, mercury is often favored because of its high and well-known density. (Caution: See Note, below). Various oils, water, and aqueous solutions are also used. The density of liquids depends on temperature, and corresponding measurement dependence on temperature needs to be considered for most measurements. Some typical density data are given in Table 2.2. The actual density of a sample fluid may differ from the tabulated value due to variations in composition and contamination. In all but the crudest measurements, an effort should be made to determine the average temperature of the manometric fluid in all vertical components. For this purpose, thermometers should be attached to the columns or mounted very close to them. Standard precautions should be taken to ensure that the manometer is at a uniform and constant temperature.

NOTE: Mercury will alloy with many other metals such as copper, lead, tin, bronze, Monel and their alloys. There is evidence that Inconel alloys, Zircalloy, and certain stainless steels are also sensitive to mercury.

TABLE 2.2
DENSITY OF MANOMETER FLUIDS

Fluid	Temperature, °C	Density, g/cm^3
Mercury	0	13.5950
	20	13.5458
Water	4	0.99997
	15.5	0.9989
	20	0.99821
Tetrabromoethane ($CH\ Br_2\ CH\ Br_2$)	20	2.96
Bromine	20	3.1226

Mercury metal and compounds of mercury may cause dangerous environmental problems. The very low vapor pressure of mercury presents a serious health hazard if spillage occurs. Extreme care is necessary, and strict adherence must be given to all applicable regulations concerning mercury.

2.1.2.3 Height H [m]. To measure column height, the meniscus should first be located and this position should then be transferred to a suitable scale. Sighting rings, pointers, electro-optical devices, floats, and capacitance pickups are among the many devices used to locate the liquid surfaces. The position of the device is then transferred to a scale with the help of a vernier, lead screw, gage blocks, etc. Cathetometers are frequently used both to locate the meniscus and to measure its position. On primary standard manometers, readings are taken in the balanced condition $p_1 = p_2$ and in the pressurized condition so that the constant offset between fluid meniscus and scale, caused by the locating device, can be eliminated from the data.

A manometer with very high accuracy using an infrared interferometer to locate the menisci and to measure their vertical movement is now under construction at the National Bureau of Standards. A manometer using ultrasonic transit time measurement for the determination of column length is commercially available. A manometer using ultrasonic interferometry is used as the primary standard for the range 0.1 Pa to 10 kPa at the National Bureau of Standards. While in these manometers the difficult task of locating the meniscus has moved from an observer to an apparatus, and while the length measurement is done automatically in terms of the wave length of light or

Copyright ASME International
Provided by IHS under license with ASME
No reproduction or networking permitted without license from IHS
Not for Resale

ultrasound, many of the other difficulties, such as temperature correction, tilt error, head correction, etc., remain.

Scales, lead screws, and gage blocks are calibrated at a reference temperature T_r (°C). If they are used at a temperature other than T_r, this reading must be corrected by

$$H = H_T^* [1 - \alpha(T - T_r)]$$

where

H_T^* = reading taken with the scale at temperature T
α = thermal expansivity of the scale
H = corrected scale reading

Errors in the column height determination are introduced by misalignment and tilt of a manometer. Figure 2.7 illustrates the case for a manometer tilted by an angle θ about a horizontal axis through the manometer tubes. The true difference ΔH in meniscus position is obtained from the apparent meniscus position measurements H_1' and H_2' by correcting as follows (subscript zero indicates zero reading)

$$\Delta H = [(H_2' - H_{20}') - (H_1' - H_{10}')] \cos \theta$$

If the manometer was vertically aligned for the zero reading and then tilted during the measurement, the correction takes the form

$$\Delta H = (H_2' - H_1') \cos \theta - (H_{20} - H_{10})$$

Figure 2.8 shows a manometer tilted by an angle ϕ in the plane of the tubes. The correction takes again the form

$$\Delta H = [(H_1' - H_{10}') - (H_2' - H_{20}')] \cos \phi$$

But, if the manometer was vertical for the zero setting and then tilted during the measurement, as is often the case due to the shifting load, the correction takes the form

$$\Delta H = (H_1' - H_2') \cos \phi - (H_{10} - H_{20}) + \ell \sin \phi$$

In these correction equations, the cosine error is proportional to the pressure measured and, with a reasonably small and constant misalignment, is often negligible. The sine error is independent of the pressure, proportional to the spacing between the columns, and often large enough to warrant serious consideration. Similar considerations should be applied to manometers of different design and for various types of misalignment and tilt during or between measurements.

Another important correction to the measured height of a liquid-filled column is caused by the surface-tension effects between the liquid and the solid walls of the tube and the gas above it. This capillarity effect causes the liquid surface to assume a convex shape (as with mercury in glass), or a concave shape (as with liquids wetting glass or metal). At the same time, the center of the meniscus is depressed below (with mercury) or raised above (with liquids wetting the tube surface) the level that it would assume in the absence of surface-tension effects. The capillary depression is very sensitive to contamination of the liquid and of the tube surface. Tables have been published giving the capillary depression as a function of meniscus height, surface tension, and tube diameter (see Tables 2.3A, 2.3B, and 2.4). These tables contain estimates at best and should be used only to determine the size of the bore of the tube for which the capillary-depression effect is less than the required uncertainty of measurement.

2.1.2.4 Reference Pressure p_1 [Pa]. Depending upon the use of the manometer, the reference pressure p_1 in Eqs. (2-4) and (2-6) could be a vacuum, atmospheric pressure, or any other pressure to which the unknown pressure p_2 shall be referenced. For other than differential-pressure measurements, the reference pressure must be known with an uncertainty less than the required uncertainty of the unknown pressure. For a vacuum reference pressure, this can be achieved by continuous pumping with a mercury diffusion pump or an oil diffusion pump with a cold trap. The reference pressure should be measured with a McLeod or thermocouple gage.

Note that the calibration of thermocouple gages depends upon the gas being measured. The vapor pressure of mercury of about 0.15 Pa (1.1×10^{13} torr) at 20°C (68°F) sets a lower limit for the reference pressure in a mercury-filled manometer.

2.1.2.5 Head Corrections. For the calculation of gas (air) heads, one must on occasion consider the fact that a gas compresses under its own weight and that the density decreases with elevation as

$$dp = - \varrho g dh \qquad (2\text{-}7)$$

where dp is the increment of pressure per increment of height dh.

Copyright ASME International
Provided by IHS under license with ASME
No reproduction or networking permitted without license from IHS
Not for Resale

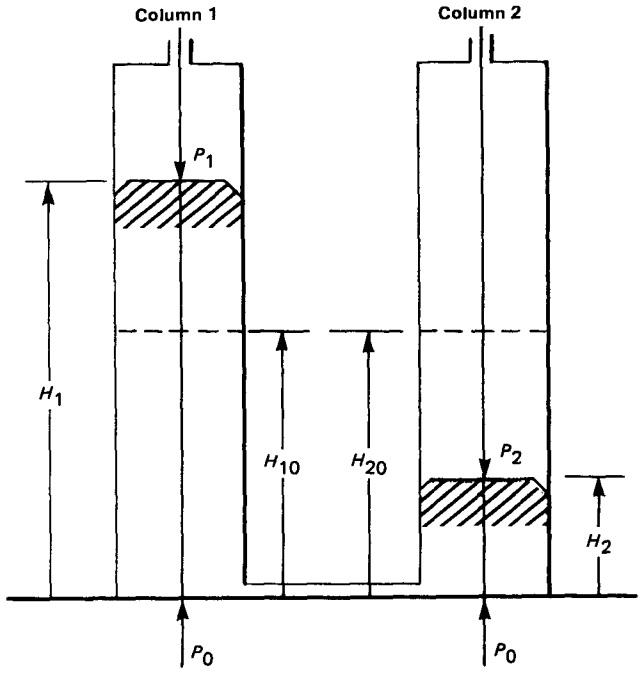

FIG. 2.6 GENERAL PRINCIPLE OF ALL MANOMETERS

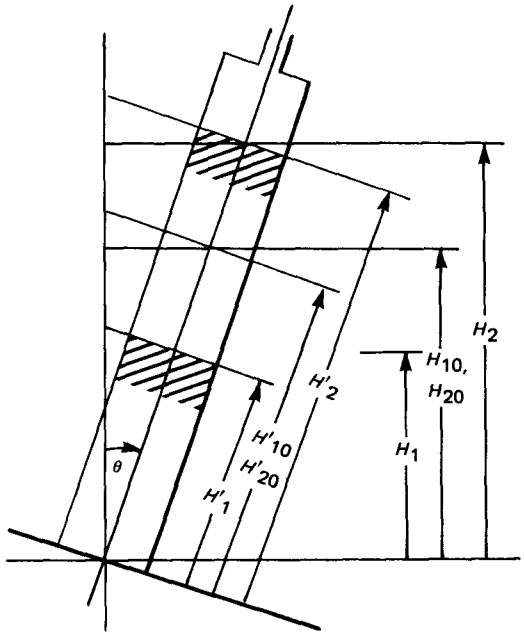

$$\Delta H = [(H'_2 - H'_{20}) - (H'_1 - H'_{10})] \cos \theta$$

FIG. 2.7 ERRORS IN COLUMN HEIGHT DETERMINATION (MANOMETER TILTED BY ANGLE θ ABOUT A HORIZONTAL AXIS THROUGH THE MANOMETER TUBES)

Copyright ASME International
Provided by IHS under license with ASME
No reproduction or networking permitted without license from IHS
Not for Resale

TABLE 2.3A
DENSITY, THERMAL EXPANSION, AND VAPOR PRESSURE OF WATER VERSUS TEMPERATURE IN °C (IPTS-68)
(Courtesy of the National Bureau of Standards)

Temperature, °C	Density, kg/m^3	Thermal Expansion Coefficient·10^{-6}, K^{-1}	Vapor Pressure, Pa
1	999.90	−50	657.1
2	999.94	−33	705.9
3	999.96	−16	758.0
4	999.97	0	813.5
5	999.96	16	872.5
6	999.94	31	935.2
7	999.90	46	1001.9
8	999.85	60	1072.8
9	999.78	74	1148.1
10	999.70	88	1227.9
11	999.61	101	1312.7
12	999.50	114	1402.5
13	999.38	127	1497.7
14	999.24	139	1598.6
15	999.10	151	1705.3
16	998.94	163	1818.3
17	998.77	174	1937.8
18	998.60	185	2064.1
19	998.41	196	2197.6
20	998.21	207	2338.5
21	997.99	217	2487.4
22	997.77	228	2644.4
23	997.54	238	2810.1
24	997.30	248	2984.7
25	997.04	257	3168.7
26	996.78	267	3362.6
27	996.51	276	3566.7
28	996.23	285	3781.5
29	995.94	294	4007.5
30	995.65	303	4245.2

GENERAL NOTE: Values are for "ordinary" or "Mean Ocean" water, i.e., standard isotopic composition of ocean water.

From the ideal gas law

$$\varrho = \frac{mp}{RT} \qquad (2\text{-}8)$$

where m is the molecular weight, R is the universal gas constant, and T is the temperature of the gas. Inserting Eq. (2-8) into Eq. (2-7) yields

TABLE 2.3B
DENSITY, THERMAL EXPANSION, AND VAPOR PRESSURE OF MERCURY VERSUS TEMPERATURE IN °C (IPTS-68)
(Courtesy of the National Bureau of Standards)

Temperature, °C	Density, kg/m^3	Thermal Expansion Coefficient·10^{-6}, K^{-1}	Vapor Pressure, Pa
0	13595.08	181.5	2.6×10^{-2}
1	13592.61	181.5	2.95×10^{-2}
2	13590.15	181.5	3.26×10^{-2}
3	13587.68	181.4	3.59×10^{-2}
4	13585.21	181.4	3.96×10^{-2}
5	13582.75	181.4	4.36×10^{-2}
6	13580.29	181.4	4.79×10^{-2}
7	13577.82	181.4	5.27×10^{-2}
8	13575.36	181.4	5.79×10^{-2}
9	13572.90	181.3	6.35×10^{-2}

$$\frac{dp}{p} = -\frac{mg}{RT}\,dh$$

which can be integrated to yield

$$p = p_o \exp\left(\frac{mgh}{RT}\right)$$

A pressure p at level h can be calculated from the pressure p_o at the level $h = 0$ using this equation. The calculation is considerably simplified by using the following approximation:

$$\exp\left(\frac{mgh}{RT}\right) \simeq 1 - \frac{mgh}{RT} = 1 - \frac{g\varrho h}{p}$$

This approximation causes an error of less than 1 ppm for h up to 10 m (~ 33 ft) with air or nitrogen at room temperature.

For differential-pressure measurements at the reference level of a manometer, usually the level of the lower meniscus, a head correction should be applied to p_1. If the reference port is open to the atmosphere, then

$$p_1 = p_o - g\varrho_{air}\Delta H$$

Copyright ASME International
Provided by IHS under license with ASME
No reproduction or networking permitted without license from IHS
Not for Resale

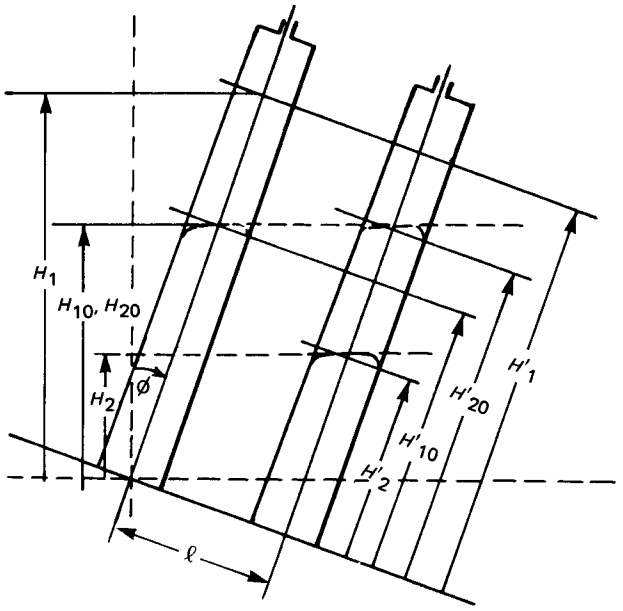

$\Delta H = (H_1 - H_{10}) - (H_2 - H_{20})$

misaligned:

$\Delta H = [(H'_1 - H'_{10}) - (H'_2 - H'_{20})] \cos \phi$

tilted after zero check:

$\Delta H = (H_1 - H_2) \cos \phi - (H_{10} - H_{20}) + \ell \sin \phi$

FIG. 2.8 ERRORS IN COLUMN HEIGHT DETERMINATION (MANOMETER TILTED BY ANGLE ϕ IN THE PLANE OF THE TUBE)

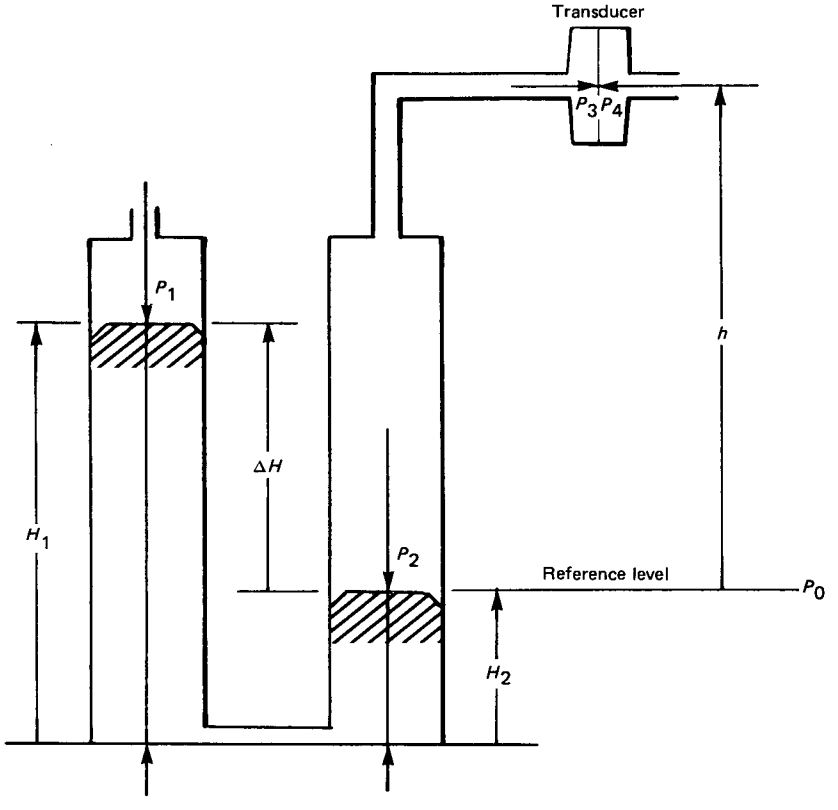

FIG. 2.9 DIFFERENTIAL PRESSURE TRANSDUCER CONNECTED TO THE MANOMETER

Copyright ASME International
Provided by IHS under license with ASME
No reproduction or networking permitted without license from IHS
Not for Resale

TABLE 2.4
CAPILLARY DEPRESSION OF MERCURY IN GLASS MANOMETERS
(SURFACE TENSION: 0.45 N/m)
(Courtesy of the National Bureau of Standards)

Bore of Tube, mm	Meniscus Height, mm					
...	0.2	0.4	0.6	0.8	1.0	1.2
10	0.069	0.137	0.202	0.264	0.322	0.375
12	0.040	0.079	0.117	0.153	0.187	0.218
14	0.023	0.046	0.069	0.090	0.111	0.130
16	0.014	0.028	0.041	0.054	0.067	0.078
18	0.008	0.017	0.025	0.033	0.040	0.047
20	0.005	0.010	0.015	0.020	0.024	0.029
22	0.003	0.006	0.009	0.012	0.015	0.017

GENERAL NOTE: Capillary depression in mm at 20°C and standard gravity.

where p_o is the atmospheric pressure at the reference level of the manometer. The differential height ΔH between the menisci is counted positive upwards from the reference level.

For another example, consider the connection of a differential pressure transducer to the manometer (see Fig. 2.9). The reference ports of manometer and transducer are open. The transducer is at a level h above the reference level of the manometer. The reference pressure for the manometer is

$$p_1 = p_o - g\varrho_{air}\Delta H$$

where ϱ_{air} is the density of air at ambient pressure p_o and temperature T. The pressure at the test port of the manometer is

$$p_2 = g\varrho_L\Delta H + p_o - g\varrho_{air}\Delta H$$

where ϱ_L is the density of the manometer fluid. The pressure at the pressure port of the transducer is

$$p_3 = p_2 - g\varrho_g h$$

where ϱ_g is the density of the pressure-transmitting gas. The pressure at the reference port of the transducer is

$$p_4 = p_o - g\varrho_{air}h$$

Finally, the differential pressure across the transducer is

$$\Delta p = p_3 - p_4 = g\Delta H(\varrho_L - \varrho_{air}) - gh(\varrho_g - \varrho_{air})$$

Similar corrections can be derived for manometers filled with dissimilar liquids or for manometers operating at high pressures.

2.1.3 McLeod Gages

2.1.3.1 Principles. McLeod gages are based on the ideal gas law

$$p_1 v_1 = p_2 v_2 \qquad (2\text{-}9)$$

where p and v are the pressure and volume, respectively, of a given quantity of gas before (subscript 1) and after (subscript 2) isothermal compression. If the volume of the gas before and after compression, and the pressure after compression are known, the initial pressure p_1 can be calculated. Figure 2.10 shows schematically a simple McLeod compression manometer. The vacuum system whose pressure is to be measured is connected through the tube A to a large volume B with an attached, closed capillary C. The volume v in B and the attached tube and capillary can be separated from the vacuum system by lifting the mercury reservoir D and raising the mercury meniscus in the flexible hose E to the level a-a. The volume v_1 of gas contained is then at the pressure p_1. Subsequently the gas is compressed into the capillary C by further raising the reservoir until the meniscus in the tube A reaches the level b-b of the top of the enclosed capillary. With the mercury in the capillary at c-c, the volume of the gas is then

$$v_2 = bh \qquad (2\text{-}10)$$

Copyright ASME International
Provided by IHS under license with ASME
No reproduction or networking permitted without license from IHS
Not for Resale

where b is the capillary volume per unit length and h is the head of mercury in tube A. The pressure in the compressed gas is

$$p_2 = p_1 + g\varrho h \qquad (2\text{-}11)$$

where g is the local acceleration of gravity and ϱ is the density of mercury at the appropriate temperature. From Eqs. (2-9) through (2-11) it follows that, for the pressure in the vacuum system,

$$p_1 = \frac{g\varrho bh^2}{v_1 - bh}$$

Figure 2.11 illustrates a simple, rotating McLeod gage commonly used for the measurement of low vacuum as, for example, the reference pressure of manometers. The pressure to be measured is applied to part F, which is normal to the plane of the paper and about which the entire gage can be rotated. To begin operation, the gage is rotated clockwise to collect all mercury in the reservoir D. Sufficient time should be allowed in this position to let the pressure in the bulb B and capillary C come to equilibrium with the pressure at F. Then the gage is slowly rotated back into its vertical position. This prompts mercury to run down through tube E and up into A thus cutting off the connection to the bulb B. Under the pressure of the mercury column in A and D, mercury will begin to fill the bulb B compressing the gas into the capillary C. As soon as bulb B is filled, excess mercury will overflow from the pointed tip of tube A and collect in the reservoir around F until the level in D is at the same height as the tip of tube A. The uncertainty of measurements made with this type of gage may be quite large due to the somewhat unpredictable behavior of the mercury at the top of tube A.

2.1.3.2 Capillaries. In order to reduce errors due to capillar effects, a capillary by-pass of the same diameter as C is attached to the tube A. The meniscus in this by-pass is brought up to the level b-b. The volume per unit length of these capillaries is a critical parameter and is measured by determining the length of a known amount of mercury at various positions in the capillary. The shape of the inside of the closed top should be as flat as possible.

"Sticking" of the mercury in capillaries is a common problem. Capillaries with less than 1 mm (0.04 in.) diameter are impractical for this reason. Extreme cleanliness of the gage and the use of high purity mercury are necessary conditions for precise measurements.

2.1.3.3 Ranges and Scales. McLeod gages are usable over the range from 2 kPa (15 torr) down to 1.3×10^{-6} Pa (10^{-8} torr). Most commercial gages operate only in the low vacuum range from about 700 Pa (5 torr) down to 0.1 Pa (7×10^{-4} torr).

Generally the distance between the meniscus of the mercury and the top of the capillary is measured with an attached length scale or a cathetometer. For capillaries of less than about 3.5 mm (0.14 in.) diameter and 100 mm (4 in.) length, the volume bh becomes a correction of less than 1% to the volume v_1 and the pressure can be calculated from the simplified equation

$$p_1 = \frac{g\varrho bh^2}{v_1} = K h^2$$

where K is the gage constant.

Simple types of McLeod gages frequently have a pressure scale attached to or engraved into the capillary tube C.

2.1.3.4 Gases and Vapors. Within the precision achievable with McLeod gages, the ideal gas law holds for all gases. Condensable vapors can generally not be measured with the McLeod gage. Corrosive gases and vapors should be avoided, since they will cause rapid deterioration of the performance of the gage through contamination of the capillary.

2.2 WORKING STANDARDS

Working standards convert an applied pressure into a suitable reading, voltage, frequency, or other signal that is a unique function of the applied pressure. Working standards are used to calibrate accurate pressure-measurement devices at one or more locations, and they are therefore required to have high long-term stability and a precision compatible with the intended purpose. They must be portable. This definition includes a wide variety of instruments, which may be classified as piston gages, manometers, transducers, and gages. The advantages, expected precision, and major operating characteristics are discussed in the following paragraphs.

2.2.1 Piston Gages. Piston gages or deadweight testers consist essentially of a piston fitted into a cylinder. Pressure applied to the cylinder exerts a force F on the piston:

$$F = A_{\text{eff}} p$$

Copyright ASME International
Provided by IHS under license with ASME
No reproduction or networking permitted without license from IHS
Not for Resale

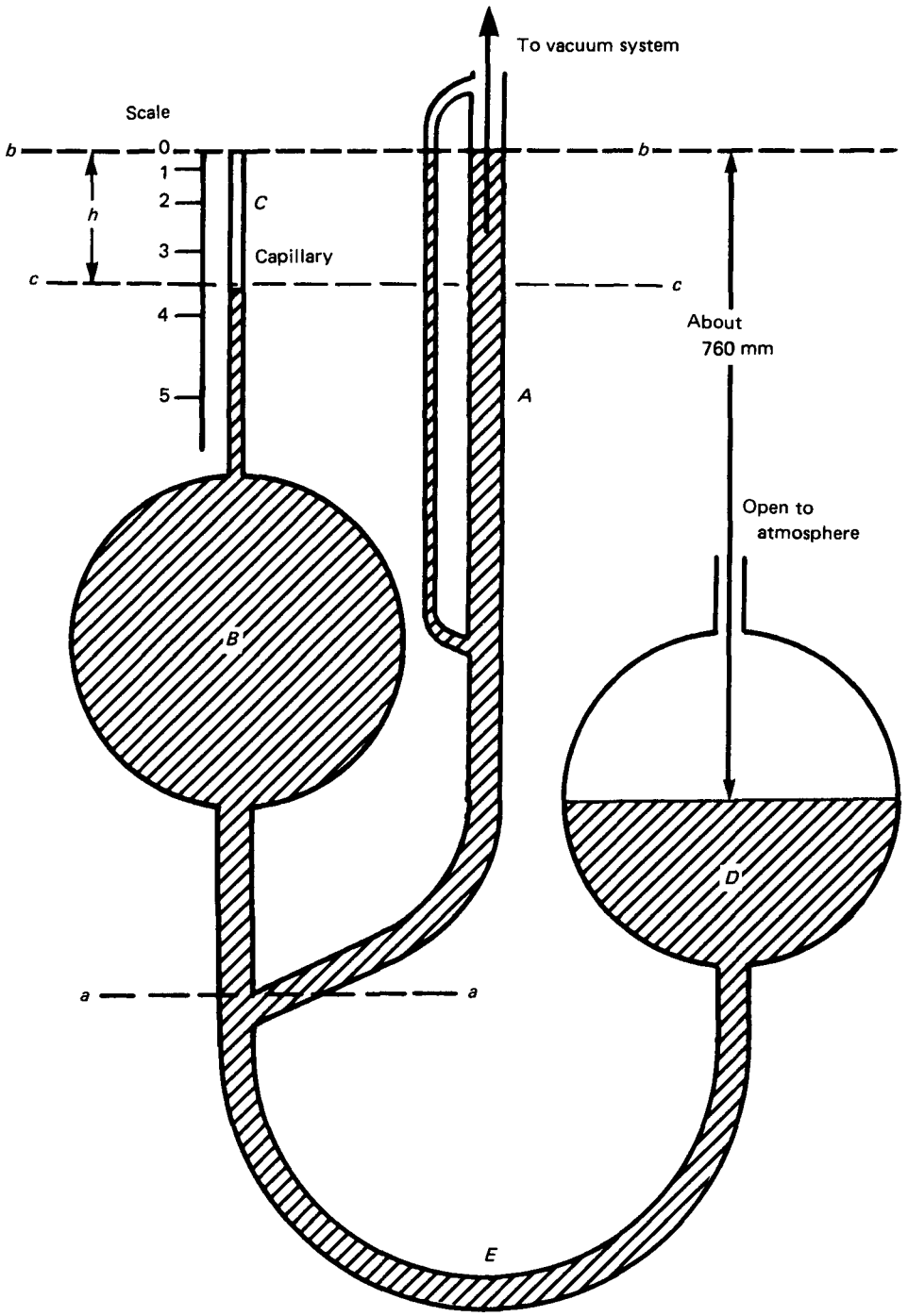

FIG. 2.10 McLEOD VACUUM MANOMETER

Copyright ASME International
Provided by IHS under license with ASME
No reproduction or networking permitted without license from IHS
Not for Resale

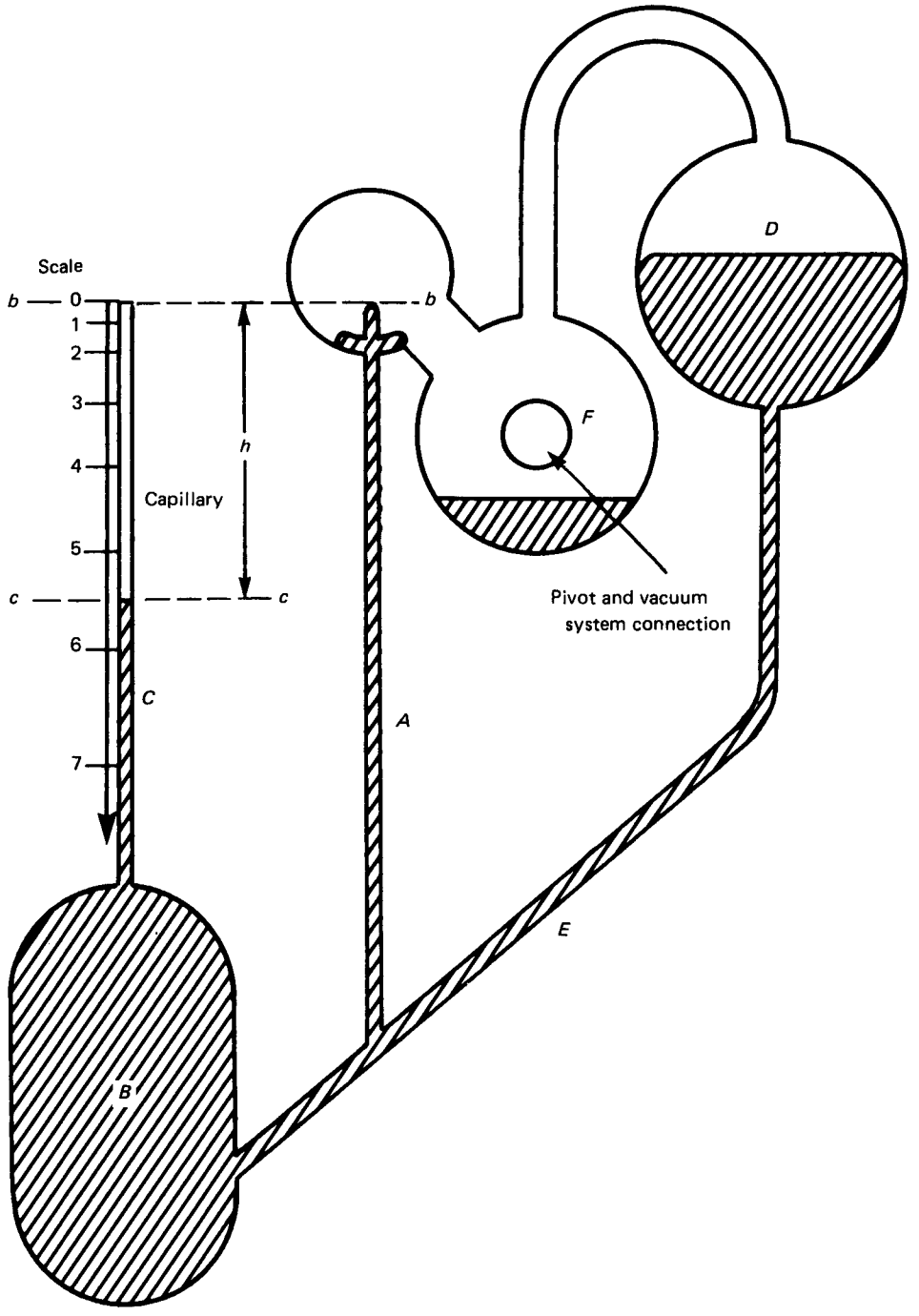

FIG. 2.11 PIVOTING McLEOD VACUUM GAGE

Copyright ASME International
Provided by IHS under license with ASME
No reproduction or networking permitted without license from IHS
Not for Resale

where A_{eff} is the effective cross-sectional area of the piston-cylinder combination and p is the pressure. The force F is counterbalanced with deadweight loaded on the top of the piston

$$F = Mg \text{ (approximately)}$$

where M is the mass of the weights and g is the local acceleration of gravity. The effective area A_{eff} is determined by calibration against a transfer standard. See paras. 2.1.1 and 3.2 for a detailed description of piston gages.

A_{eff} is generally a function of temperature and pressure:

$$A_{eff} = A_o [1 + (\alpha_c + \alpha_p)(T - T_{ref})][1 + b_1 p + b_2 p^2]$$

where

A_o = effective area at zero pressure and at the reference temperature
α_c and α_p = thermal expansion coefficients of the cylinder and the piston, respectively
T = temperature
T_{ref} = reference temperature
b_1 and b_2 = pressure coefficients for the area

The force generated is accurately described by

$$F = \sum_{i=1}^{n} gM_i \left(1 - \frac{\varrho_{air}}{\varrho_{M,i}}\right) + N + \gamma_C$$

where

M_i = mass values of weights i of density $\varrho_{M,i}$
g = local acceleration due to gravity
n = maximum number of weights i
ϱ_{air} = density of the ambient air
N = tare weight
γ_C = surface tension correction

Piston gages have excellent long-term stability, varying as little as a few parts per million (ppm) over 20 years under favorable circumstances. The precision of the best piston gages approaches 1 ppm. A precision of better than 0.1% is achievable with most commercial instruments.

Piston gages cover the range from 2×10^3 to 1.5×10^9 Pa (0.3 to 2.2×10^5 psi). The calibration uncertainty of piston gages varies between 25 ppm and 200 ppm. Calibrations traceable to NBS are available from many manufacturers and certified calibration facilities. Training courses on the care and operation of piston gages are given regularly at NBS and by several manufacturers. See Refs. [6], [8], and [9] for information on calibration and use of piston gages.

2.2.2 Manometers. Manometers balance the unknown pressure against the weight per unit area of a liquid column

$$p = g\varrho H$$

where ϱ is the density of the fluid used and H is the height of the upper meniscus counting positive upwards from the lower meniscus of the fluid in a U-tube or cistern manometer. This measurement can be done by visually locating the menisci and transferring the locations to a scale, or by means of capacitive, optical, inductive, or ultrasonic devices, often in conjunction with lead screws and turns counters.

Major uncertainties can be caused by the temperature dependence of the density of the manometric fluid, by capillarity effects, and by tilt of the instrument. For details see paras. 2.1.2 and 3.3. Mercury manometers foul easily when used with air or oxygen. This impairs their precision. Cleaning and refilling can usually be accomplished without seriously affecting the calibration of the instrument.

Manometers normally cover the range from 10^{-3} to about 5×10^5 Pa (1.5×10^{-7} to 72.5 psi). The accuracy of the best commercial manometers, manual or automatic, approaches 50 ppm at atmospheric pressure. The precision of these instruments may reach 10 ppm. Like piston gages, manometers have excellent long-term stability provided they are carefully maintained. They are difficult to transport. Some automatic manometers have electrical outputs suitable for interfacing with automatic data-acquisition systems and pressure controllers.

A detailed description of manometer practices is available from the Instrument Society of America.

2.2.3 Transducers. Pressure transducers convert an applied pressure into an analog or digital signal. The transducing element may be a set of strain gages on a membrane, a vibrating membrane or cylinder, an elastically deformed capacitor, bellows, or a Bourdon tube whose deformation is measured with suitable means or any of a variety of similar schemes. Transducers range from simple strain-gage types to sophisticated force-balanced Bourdon tubes. Many of these are discussed in Section 3. The selection of transducers suitable for use as transfer standards requires reliable data on their

Copyright ASME International
Provided by IHS under license with ASME
No reproduction or networking permitted without license from IHS
Not for Resale

long-term performance. The National Bureau of Standards provides a service for the determination of the long-term performance of transducers.

Zero drift, hysteresis, temperature, and altitude dependence are major sources of error. A precision of 100 parts per million of full-scale reading, excluding zero drift, can be attained by a few selected transducers. Major advantages of transducers used as transfer standards are their portability, small size, automatic operation, and fast response. Transducers are available for the pressure range from 0.1 to 1.5×10^9 Pa (1.5×10^{-5} to 2.2×10^5 psi).

2.2.4 Gages. Pressure gages convert an applied pressure into an analog pointer deflection that can be read on a scale. The transducing elements are most frequently Bourdon tubes, bellows, or aneroid capsules, the deflection of which is coupled through gears and linkages to a pointer. Hysteresis in the transducing element, friction in the gears and linkages, and temperature effects limit the precision of pressure gages to about 0.05%. Such gages are available for pressures from about 10^3 to 7×10^8 Pa (0.15 to 1×10^5 psi). For some types of gages, long-term performance is well established.

Copyright ASME International
Provided by IHS under license with ASME
No reproduction or networking permitted without license from IHS
Not for Resale

SECTION 3 — PRESSURE MEASUREMENT DEVICES

This Section is devoted to the characteristics of devices commonly used in the industrial environment to measure pressure. It does not deal deeply with the theoretical characteristics of such devices, but rather is intended as a guide in their selection and use.

Because of the multiplicity of devices which can be employed to measure pressure, this Section deals with the component parts of many such devices. For example, a particular manufacturer may employ a bellows coupled with an LVDT (Linear Variable Differential Transformer) to measure gage pressure, while an equally capable device made by another manufacturer may employ a diaphragm and electronic force-balance techniques to achieve the measurement. Thus we have chosen to discuss the properties associated with each of the components to allow the user to understand the concepts employed in a device he may be considering for his particular measurement problems. Some devices, particularly dial and piston gages as well as manometers, are complete unto themselves. Here the treatment is singular for the class of device. Once a choice of measuring device is made, it is recommended that manufacturers be contacted for details of the applications and limitations of a particular unit.

3.1 RANGES AND ACCURACIES

Usually the first considerations involved in selection of a pressure-measuring device are the magnitude of the pressure to be measured and the accuracy of devices available to operate at the desired pressure. (Accuracy includes the combined conformity, hysteresis, and repeatability errors. See ISA S51-1). Other considerations include the environment of intended use, ease of use, and relative cost. The tables which follow are intended to guide the user in the selection of appropriate pressure-measuring devices. The categories of environment, ease of use, type of output, and relative cost are coded in the following ways.

(a) Type (see Fig. 3.45)
- *(1)* Absolute (A)
- *(2)* Differential (D)
- *(3)* Gage (G)

(b) Testing Environment
- *(1)* Lab
- *(2)* Controlled/field
- *(3)* Field

(c) Cost (Based on 1979 Dollars)
- *(1)* Inexpensive (under $250)
- *(2)* Low (under $1000)
- *(3)* Medium (under $3000)
- *(4)* High (above $3000)

(d) Ease of Use
- *(1)* Simple
- *(2)* Moderate
- *(3)* Complex

(e) Output
- *(1)* Voltage
- *(2)* Current
- *(3)* Frequency
- *(4)* Analog Indicator
- *(5)* Digital Indicator
- *(6)* BCD[1]
- *(7)* Pneumatic

Tables 3.1 and 3.2 are presented as guides only. A particular manufacturer may offer devices of a particular type which fall outside these limits. Each such offering must be evaluated on its own merits; exclusion from these tables does not necessarily indicate inferior performance with respect to listed devices. The listing of each class of device also indexes the paragraphs describing them, providing a handy cross-reference between ranges and device characteristics.

Not included in these discussions are application considerations such as temperature limitations or compatibility with corrosive media. These are so dependent upon manufacturing technique and device design as to be beyond the scope of this Supplement. Here again, manufacturers will provide assistance in selection.

As a general illustration for the use of Table 3.1 in obtaining an instrument accuracy range, the following procedure is offered.

[1]Binary coded decimal, using four data lines per digit, with 8-4-2-1 weighting of each data line.

Copyright ASME International
Provided by IHS under license with ASME
No reproduction or networking permitted without license from IHS
Not for Resale

Copyright ASME International
Provided by IHS under license with ASME
No reproduction or networking permitted without license from IHS

TABLE 3.1
SUMMARY OF PRESSURE MEASURING DEVICE CHARACTERISTICS

Paragraph	Design	Applicable Pressure Range, psi	Type	Accuracy	Environment	Output	Ease of Use	Cost
		10^{-1} 10^{3} 10^{6}						
3.2.1	Simple cylinder		G	200 – 1000 ppm	2		2	3 or 4
3.2.2	Re-entrant cylinder		G	50 – 1000 ppm	2		2	4
3.2.3	Controlled clearance		G	20 – 150 ppm	1		3	4
3.2.4	Pneumatic deadweight		G	100 – 1000 ppm	2		2	3 or 4
3.2.5	Absolute pressure		A	35 – 100 ppm	2		3	3 or 4
3.2.6	Vacuum		G	35 – 100 ppm	2		2	3
		10^{-4} 10^{-2} 10^{0} 10^{2}						
3.3.1	U-tube		D or G	6 – 1k ppm	1, 2, or 3	. . .	1, 2, or 3	1-4
3.3.2	Cistern		D or G	30 – 100 ppm	1 or 2	. . .	1 or 2	2-4
3.3.3	Inclined		D or G	0.1 – 10% full scale	1 or 2	. . .	1	1
3.3.4	Micromanometer		D or G	0.01 – 1% full scale	1	. . .	2	3
3.3.5	Fortin barometer		A	70 ppm	1 or 2	. . .	2	3

Not for Resale

Copyright ASME International
Provided by IHS under license with ASME
No reproduction or networking permitted without license from IHS

TABLE 3.1
SUMMARY OF PRESSURE MEASURING DEVICE CHARACTERISTICS (CONT'D)

Paragraph	Design	Applicable Pressure Range, psi	Type	Accuracy	Environment	Output	Ease of Use	Cost
3.4.2.1	Force balance		A, D, G	0.05 – 0.25% full scale	1	1, 2, 4, 5	2	4
			A, D, G	0.25 – 2.00% full scale	2, 3	1, 2, 3, 7	1	2
3.4.2.3(a)	Nozzle baffle							
3.4.2.3(b)	Capacitance	Depends on Sensing Elements Used						
3.4.2.3(c)(1)	LVDT		A, D, G	0.1 – 1.0% full scale	2, 3	1, 2, 3, 7	1	1, 2, 3
3.4.2.3(c)	Inductance devices							
3.4.2.3(d)	Potentiometric		A, D, G	1.0 – 10.0% full scale	2, 3	1	1	1
3.4.2.3(e)	Oscillating devices	(See Table 3.2)	A, D, G	0.02 – 0.50% full scale	1, 2, 3	1, 2, 3, 5, 6	1, 2, 3	2, 3, 4
		10^{-10} 10^{-5} 10^{0} 10^{3}						
3.5.3.1	Mercury micromanometers		A	0.1 – 1.0% full scale	1	4	2	2
3.5.3.2	Butyl-phthalate manometer		A	0.1 – 1.0% full scale	1	4	2	2
3.5.3.3	Diaphragm comparator		A	1.0% full scale	1	1	2	2, 3
3.5.3.4	McLeod gage		A	0.05% full scale	1	4	2, 3	2, 3
3.5.4.1	Thermocouple gage		A	1.0 – 5.0% full scale	1, 2	1, 2	1	1
3.5.4.2	Pirani gage		A	1.0 – 5.0% full scale	1, 2	1, 2	1	1
3.5.4.3	Ionization gage		A	1.0 – 5.0% full scale	1	1	2	1, 2, 3, 4
3.5.4.4	Molecular gage		A	1.0 – 5.0% full scale	1	4	2	3

Not for Resale

Copyright ASME International
Provided by IHS under license with ASME
No reproduction or networking permitted without license from IHS

TABLE 3.1
SUMMARY OF PRESSURE MEASURING DEVICE CHARACTERISTICS (CONT'D)

Paragraph	Design	Applicable Pressure Range, psi	Type	Accuracy	Environment	Output	Ease of Use	Cost
		10^{-2} 10^{0} 10^{3} 10^{6}						
3.4.2.3	Pressure switch	Depends on elements used	A, D, G	1.0 – 5.0% full scale	2, 3	1, 2	1	1
3.4.2.3	Piezoelectric	⊢——————⊣	A, D, G	≈1.0% full scale	1, 2, 3	1	2	3
	ELASTIC [10][13]		A, D, G	0.25 – 5.00% full scale	2, 3	4, 5	1	1
3.6.1	Bourdon tube gage	⊢——————⊣		0.05 – 5.00% full scale	1, 2	4, 5	1	2
3.6.2	Bellows gage	⊢——————⊣	A, D, G	0.25 – 5.00% full scale	2, 3	4, 5	1	1
3.6.3	Diaphragm gage	⊢——————⊣	A, D, G	0.25 – 5.00% full scale	2, 3	4, 5	1	1

Not for Resale

(a) Given a specific pressure level to be measured.

(b) Observe the applicable pressure range of pressure-measuring devices as listed on the left-hand side of the Table.

(c) From this, the design types of available pressure-measuring devices that fulfill this requirement are listed.

(d) The accuracy range of each design is listed on the right-hand side of the Table along with other important information.

(e) The attainable accuracy is therefore known.

(f) The exact accuracy for each specific device, however, requires consultation with the manufacturer.

A specific example for the use of Table 3.1 is also offered to show a detailed case study.

EXAMPLE:

A pressure-measuring device is required to measure a pressure level of 10,000 psi under a controlled/field environment [11]. The question to be answered is which devices can be used and what accuracy levels can be expected from each instrument.

Observing Table 3.1 permits a listing of devices with their associated accuracy range and the paragraph of PTC 19.2 where the device is described. This observation gives the following.

(a) Two types of piston gages could be considered.

Design	Paragraph	Accuracy, ppm
Simple cylinder	3.2.1	200 – 1000
Re-entrant cylinder	3.2.2	50 – 1000

(b) No types of manometers.

(c) Only pressure transmitters containing Bourdon tube sensing elements will measure this pressure level. The expected accuracy range depends on the type of detector that is used in the pressure transmitter. It must be remembered that a pressure transmitter or transducer is a device which contains a sensing element, a detector, and a means for transmitting the sensed signal to a remote location. An accuracy range of 0.02% to 10% of full scale can be expected depending on the type of detector. The types of detectors for controlled/field environments are listed as follows:

Design	Paragraph	Accuracy, % of full scale
Force balance	3.4.1.1	1.25 – 2.00
Nozzle baffle Capacitance LVDT Inductance	3.4.1.3	0.1 – 1.0
Potentiometric	3.4.1.3	1.0 – 10.0
Oscillating devices	3.4.1.3	0.02 – 0.50

(d) No type of low absolute pressure (vacuum) sensors.

(e) One type of elastic gage.

The above example suggests a range of pressure-measuring devices for a specific set of pressure-measurement requirements. Further requirements would further narrow the list of devices.

3.2 PISTON GAGES

The piston gage is one of the few measuring devices which measures pressure in terms of the fundamental units of force and area. Because it can also generate a pressure through applying a weight across a known area, its use is frequently associated with a device known as a "deadweight tester." While such use is an important application, it is not the one which falls within the scope of this Section. The basic equation for the piston gage is

$$P = F/A$$

where P is the pressure, F is force, and A is area.

Measurement of pressure to an accuracy of 1 part in 10,000 or better can be made with certain types of piston gages. In order to achieve this accuracy, the environment in which the gage is to be used and certain parameters of the instrument itself must be considered. Failure to consider these can introduce a considerable error. Acceleration due to gravity, air buoyancy, temperature, surface tension of the fluid, weight of the fluid, and elastic deformation of the cylinder must be evaluated and corrections made to reduce the error in measurement.

Piston gage designs commonly incorporate three designs of cylinders:

(a) simple cylinder

(b) re-entrant cylinder

(c) controlled-clearance cylinder

A platform with calibrated weights is balanced on a piston which is floated on the fluid within a cylinder. A connection to the cylinder transmits the fluid pressure from the process connection in which pressure is to be measured.

See paras. 2.1.1 and 2.2.1 for detailed discussion of piston gages.

3.2.1 Simple Cylinder Piston Gage. The simple cylinder gage is the most often used and is available with a range up to 83,000 kPa (12,000 psig).

In use, the piston gage is connected to the system under test as shown in Fig. 3.1.

Copyright ASME International
Provided by IHS under license with ASME
No reproduction or networking permitted without license from IHS
Not for Resale

TABLE 3.2
SENSING ELEMENTS

Paragraph	Design	Applicable Pressure Range, psi	Type
		10^{-3} 10^{-2} 10^{0} 10^{3} 10^{6}	
3.4.1.1(a)	Diaphragms		A, D, G
3.4.1.1(b)	Bellows		A, D, G
3.4.1.1	Bourdon tubes		A, D, G
3.4.1.2(a)	Rolling diaphragms		D, G
3.4.1.2(b)	Bell-type element		D, G
3.4.1.2(c)	Slack and limp diaphragms		D, G

Pressure is connected to the inlet line, which must in general be filled with a hydraulic oil. This oil is necessary to provide for proper operation of the piston and cylinder. It also serves to keep corrosive or contaminating fluids from reaching the internal parts of the measuring system. If very large displacements of hydraulic fluid are required for a particular piston gage (e.g., large piston diameter), an oil reservoir may be added to the system. This would be an expanded area of the inlet pipe arranged so that large *volumetric* changes would result in small *height* changes within the inlet column. This is important because head effects can contribute to reading errors.

In use, calibration weights are added to or taken from the weight platform until the piston rests somewhere in its midposition; usually a fiduciary mark or scale is available to properly position the piston. It is also common practice to rotate the weights and piston while taking a final reading to minimize piston-to-cylinder friction effects.

It must also be remembered that the *total* weight of piston, weight table, and calibration weights is used to calculate the pressure being measured. Manufacturer's literature will give the net weight of the table and piston. This must be added to the calibration weights for pressure measurement. Frequently, the calibration weights are corrected or calibrated for a particular piston gage and may therefore not be interchangeable between gages of the same model or type. Manufacturer's literature should again be consulted for this information.

Because the force of gravity varies with location and altitude, some manufacturers will provide correction factors for this phenomenon. Generally, however, this is not a factor where accuracies $\geq 0.5\%$ are involved.

The optional gage (Fig. 3.1) is useful for estimating the total weight to be used, but may be omitted for reasons of economy.

3.2.2 Re-entrant Cylinder Piston Gage. The re-entrant cylinder gage is usually used for higher-pressure measurements; however, it can be used for lower pressures as well. The lower limit is usually determined by the weight of the platform. Commercially available re-entrant cylinder gages are available with a range of approximately 552 kPa to 276 MPa (80 psi to 40,000 psi).

Figure 3.2 is a schematic representation of a re-entrant cylinder piston gage. Note that a cavity is provided around the outside of the cylinder so that the fluid pressure is exerted on the outside as well as the inside of the cylinder. This design reduces the clearance between piston and cylinder at higher pressures and thereby reduces the otherwise excessive leakage of pressure fluid to tolerable levels.

The operation of this piston gage is similar to that of the simple cylinder gage. Because of the higher pressures being measured, a motor-driven positive displacement pump (A) is sometimes provided. This pump is used to increase the system pressure to near the measurement value. A second hand-operated vernier pump (B) is used for the final adjustment. A monitoring gage (F) is provided to allow tracking of the system pressure as it increases.

Copyright ASME International
Provided by IHS under license with ASME
No reproduction or networking permitted without license from IHS
Not for Resale

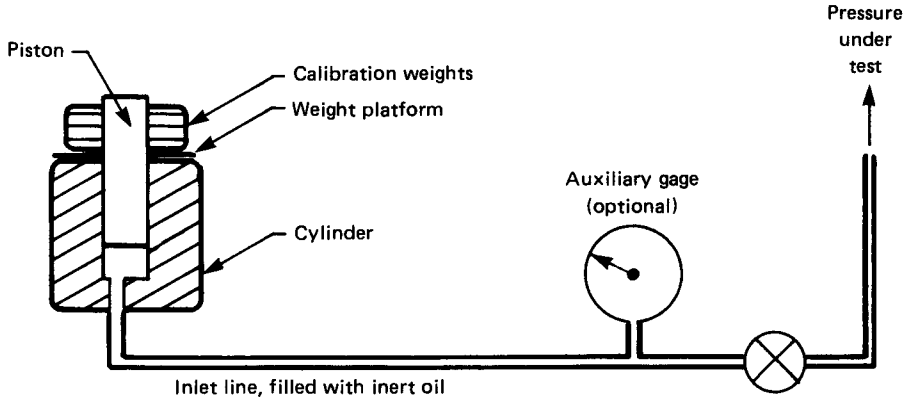

FIG. 3.1 SIMPLE CYLINDER PISTON GAGE

3.2.3 Controlled-Clearance Cylinder Piston Gage. The controlled-clearance cylinder gage is, again, usually used for higher-pressure measurement. However, as mentioned in Section 2, the National Bureau of Standards maintains a group of controlled-clearance piston gages covering the range from 35 kPa to 2.5 GPa (5 psi to 370,000 psi). Paragraph 2.1.1 should be consulted if a more detailed explanation of operating principles is desired.

Figure 3.3 is a schematic representation of a controlled-clearance piston gage. It is similar to the reentrant type with the exception of the source of pressure for the external cylinder cavity. The motorized positive displacement pump (A) can be used to pressurize the system to near the measurement point. By opening valve (N) this pressure is exerted in the cylinder (D) as well as the external cavity. When near the measurement value, valves (N and M) are closed and the pump (A) stopped. The pressure in the cylinder (D) is then adjusted by use of the hand pump (B). Similarly, the pressure in the external cylinder cavity is adjusted by use of hand pump (G). The internal and external cylinder pressure are monitored by gages (F) and (H), respectively. The external pressure is usually reduced to just below the pressure in cylinder (D). Care must be taken to not allow the differential pressure between the cylinder (D) and external cavity to increase to a point where the cylinder is damaged.

3.2.4 Pneumatic Deadweight Ball Gage. Ball gages using air or gas as the fluid are available with range capability of up to 7000 kPa (1000 psi). The use of such a gage is usually limited by the available source of dry compressed gas, which must be about 50% higher than the pressure to be measured. Pneumatic ball gages are easily operated and can be used to measure down to about 1.0 kPa (4 in. of water). A major advantage of these gages is insensitivity to contamination.

Figure 3.4 is a schematic diagram of the pneumatic tester. In this type of construction a precision ceramic ball is floated within a tapered stainless steel nozzle. A flow regulator introduces pressure under the ball, lifting it toward the annulus between the ball and nozzle. Equilibrium is reached when the vented flow equals the fixed flow from the supply regulator, and the ball floats. The pressure, which is also the output pressure, is proportional to the load. During operation, the ball is centered by a dynamic film of air, eliminating physical contact between the ball and nozzle.

When weights are added or removed from the weight carrier, the ball rises or lowers, affecting the air flow. The regulator senses the change in flow and adjusts the pressure under the ball to bring the system into equilibrium, changing the output pressure accordingly. Thus, regulation of output pressure is automatic with changes in load on the spherical piston (ball).

3.2.5 Absolute Pressure Piston Gage. By enclosing the calibration weight platform and evacuating the chamber, the piston gage can be used to measure absolute pressure (see Fig. 3.5). When testing in the region below atmospheric pressure, the pressure source is shut off and the vacuum pump is used. The vacuum created allows the fluid (usually air or gas) in the piston to expand and lift the weight platform. The platform is rotated by a motor drive, within the enclosure, to reduce piston drag.

The accuracy of measurement is the same as for the tester used in atmosphere, with the exception that the

Copyright ASME International
Provided by IHS under license with ASME
No reproduction or networking permitted without license from IHS
Not for Resale

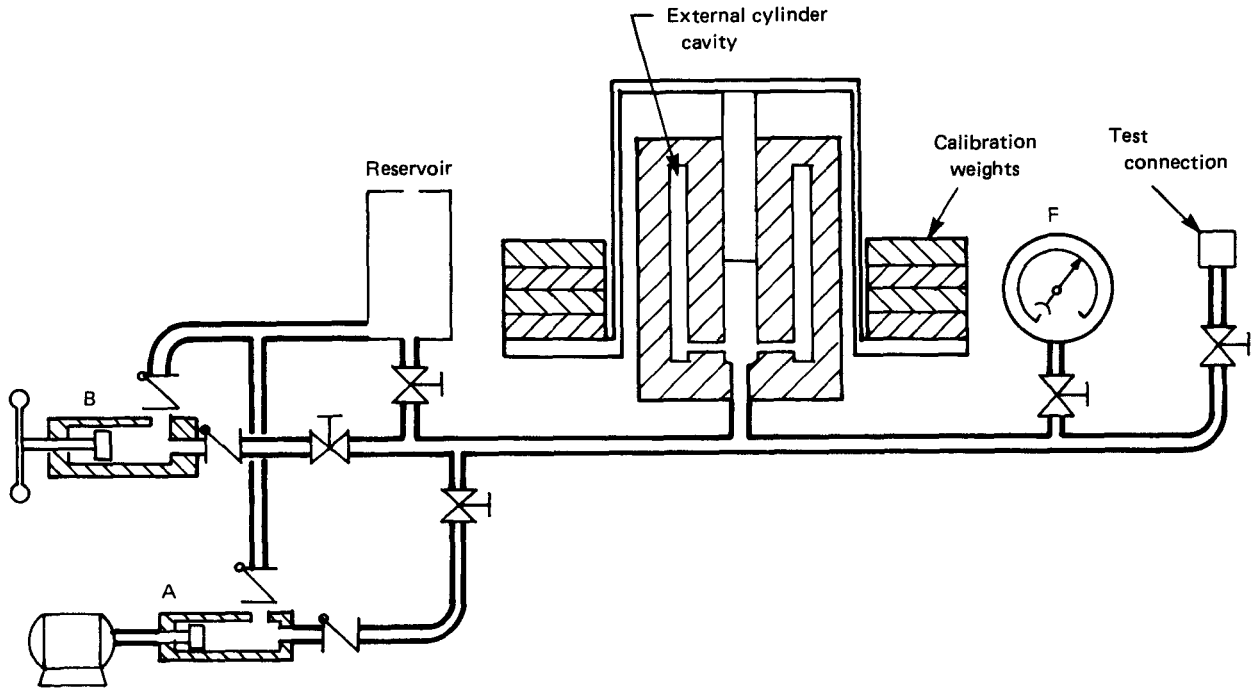

FIG. 3.2 RE-ENTRANT CYLINDER PISTON GAGE

air buoyancy becomes a variable and introduces less error as absolute zero pressure is approached.

3.2.6 Vacuum Piston Gage. The vacuum piston gage (Fig. 3.6) is similar in design to the simple cylinder gage used for measuring above-atmospheric pressure, with the exception that the weights are hung from the piston. The vacuum range is dependent on the vacuum pump used. Piston gages for commercial use are available to measure down to 25 mm Hg absolute (1 in. Hg absolute). The highest vacuum which can be measured is dependent on the barometric pressure at the time and place of use. Accuracies of 3 parts in 10,000 can be achieved if the piston gage reading is corrected for the environment in which is it used.

Control of the unit is by use of a valve to shut off the vacuum source and a second valve to bleed air into the cylinder. The weight carrier must be rotated during evacuation of the cylinder and at the time of measurement reading.

3.2.7 Piston Gage Measurement With a Diaphragm Separator. The piston gage can be used to measure pressure in processes where the process fluid is not compatible with the gage by use of a diaphragm separator (see Fig. 3.7).

The diaphragm separator can be one of a number of devices such as those discussed in the paragraphs on transducers and transmitters in this Section, for measurement of differential pressure, or the separator may be integral to the piston gage.

When using these devices, the weight applied to the piston gage must bring the separator element to its null or zero-differential point. Selection of the diaphragm device dictates that it should be capable of measuring a low differential pressure compared to the pressure measurement to be made. The accuracy of these devices is usually stated as a percentage of the range. Therefore, if the range is low in comparison to the pressure being measured, the error is less. Care must be exercised when applying pressure to the diaphragm separator to avoid overranging the instrument, causing damage and introducing error in the measurement.

3.3 MANOMETERS

The use of manometers, particularly in a field environment, has lessened as transducers have become more accurate and accepted. However, the simplicity of construction and close approximation of many specialized designs to primary standards helps maintain their place in certain applications. A few of these

Copyright ASME International
Provided by IHS under license with ASME
No reproduction or networking permitted without license from IHS
Not for Resale

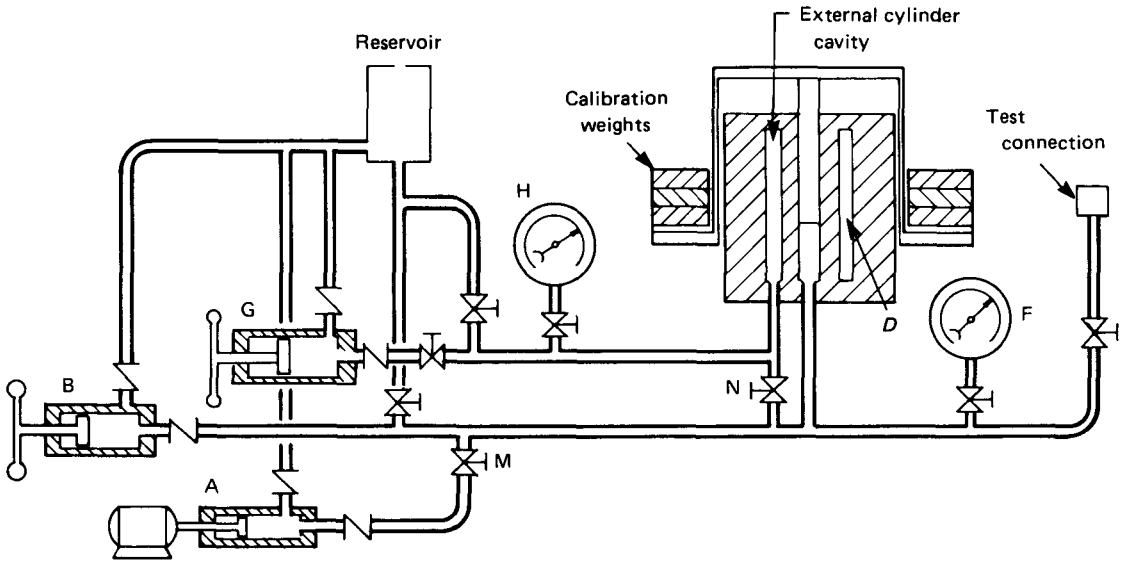

FIG. 3.3 CONTROLLED-CLEARANCE CYLINDER PISTON GAGE

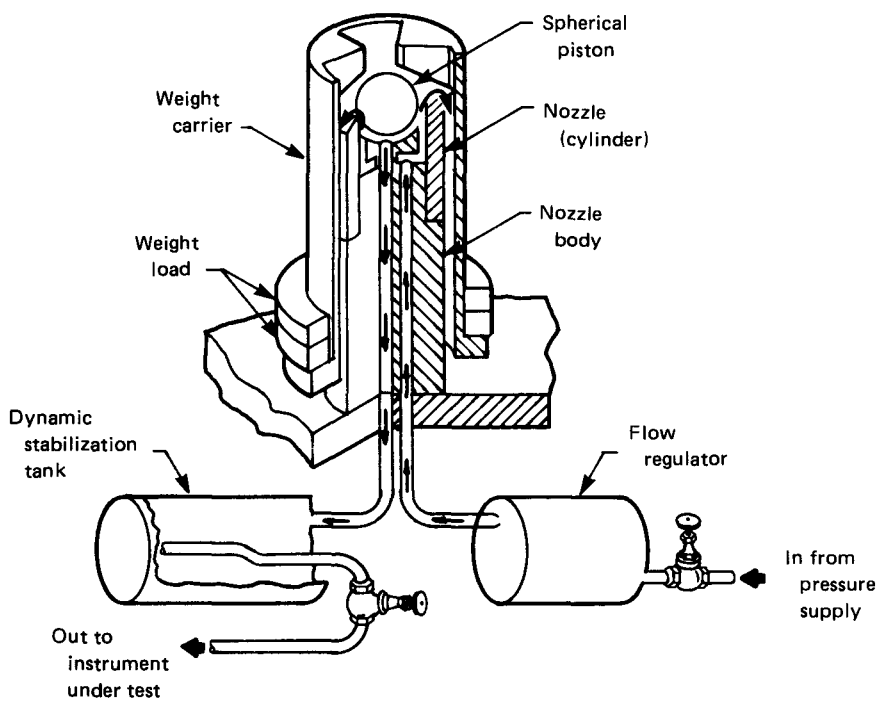

FIG. 3.4 PNEUMATIC DEADWEIGHT BALL GAGE
[Courtesy of Ametek, Inc. (Mansfield & Green Division)]
(Reprinted from "Pressure Gauge Handbook," Marcel Dekker, Inc., New York, 1985, by courtesy of Marcel Dekker, Inc.)

Copyright ASME International
Provided by IHS under license with ASME
No reproduction or networking permitted without license from IHS
Not for Resale

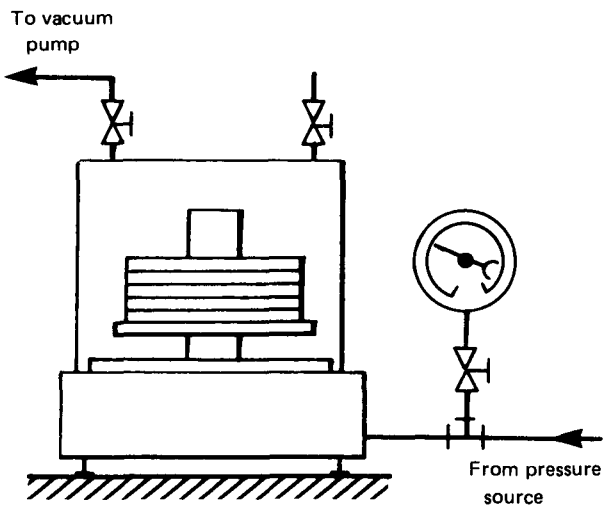

FIG. 3.5 ABSOLUTE PRESSURE PISTON GAGE

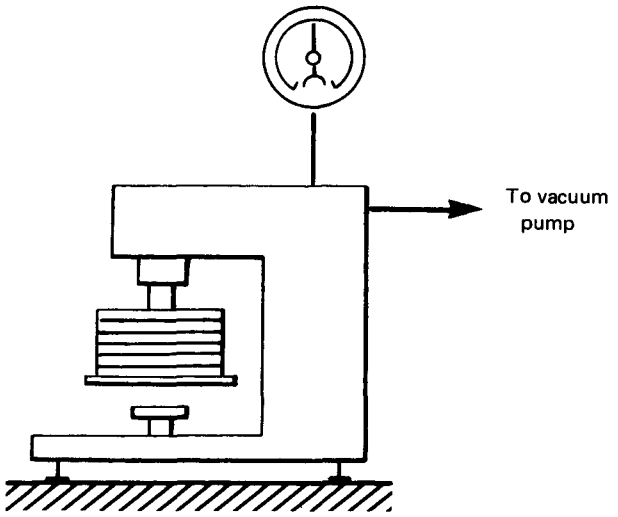

FIG. 3.6 VACUUM PISTON GAGE

designs are described here. The details of manometer operation are discussed in paras. 2.1.2 and 2.2.2, and in the reference publications. Special versions are available for low absolute pressure (vacuum measurements) (see para. 3.5).

3.3.1 U-Tube Manometer. The basic form of the manometer is a U-shaped tube with the legs vertical. Figure 3.8 shows the manometer being used to measure absolute pressure in a pipe, and Fig. 3.9 shows its use with a flowmeter element measuring differential pressure. The liquid in the U-tube must be more dense than the fluid in the pipe and immiscible with it.

3.3.2 Cistern Manometer. The cistern manometer is shown in Fig. 3.10. In this device, the area of one leg is made substantially larger than the other, in the form of a cistern into which the narrow leg dips. The advantage of the cistern is that the liquid level inside it will vary only slightly while substantial changes of level occur in the narrow leg. This facilitates applying a scale to only the narrow leg and correcting the graduations on this scale for variations of level in the cistern. Reading accuracy is increased, relative to a U-tube with the same filling liquid, by the fact that one does not have to add two readings to obtain the pressure. The manometer can read pressures below atmospheric by leaving the cistern open to the atmosphere and making the test pressure connection to the top of the narrow tube.

A refinement of the cistern manometer, which enables the construction to be mostly from nontransparent materials, is to add a floating scale with suitable low-friction bearings to the narrow leg. A small window with a fixed hairline index allows an operator to take all readings at a convenient elevation. The addition of a vibrator to the outside of the narrow leg will eliminate errors due to bearing friction, but not those due to surface tension on the float.

3.3.3 Inclined Manometer. If a manometer is inclined at an angle with the vertical, the vertical displacement is still the same, but the movement of liquid along the tube is greater in proportion to the secant of the angle. The common form of inclined manometer is made with a cistern, as shown in Fig. 3.11.

The scale is graduated to take account of the liquid density, inclination, and cistern level shift so that readings will be in convenient pressure units such as equivalent vertical centimeters or inches of water. A spirit level and leveling screws are usually provided, so that the designed angle can be reproduced in installation.

This form of manometer is usually used for gas pressures, as for draft gages. The graduation intervals are commonly 0.25 mm water (0.01 in. water) with spans up to about 250 mm (10 in.).

3.3.4 Micromanometer. A micromanometer is a precision device for measuring very small differential pressures. Depending on the reference pressure, it can also

Copyright ASME International
Provided by IHS under license with ASME
No reproduction or networking permitted without license from IHS
Not for Resale

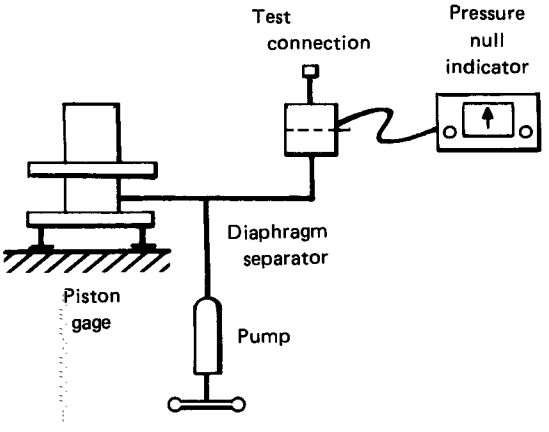

FIG. 3.7 PISTON GAGE MEASUREMENT WITH A DIAPHRAGM SEPARATOR

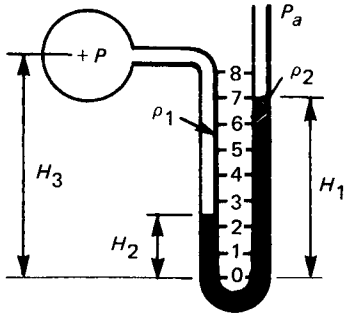

$$P = g\,[\rho_2\,(H_1 - H_2) - \rho_1\,(H_3 - H_2)] + P_a$$

where

P = absolute pressure in pipe
P_a = atmospheric pressure
g = magnitude of local acceleration due to gravity
ρ = density

FIG. 3.8 U-TUBE MANOMETER FOR ABSOLUTE PRESSURE

be used to measure absolute pressure or near-atmospheric pressure.

One form of micromanometer (Fig. 3.12) is essentially an inclined tube with a vertically moveable well. The inclined tube is short and set on a nearly flat slope for high sensitivity. This tube is not graduated but is merely provided with a fixed index. The well is moved by means of a micrometer screw and is connected to the inclined tube indicator with a flexible hose. In use, the instrument is first zeroed by adjusting the height of

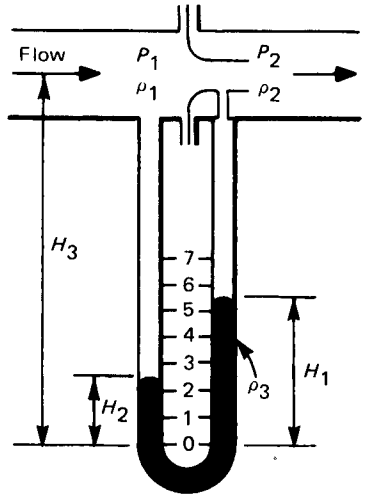

$$P_1 - P_2 = g\,[\rho_3\,(H_1 - H_2) + \rho_2\,(H_3 - H_1) - \rho_1\,(H_3 - H_2)]$$

where notation is the same as in Fig. 3.8.

FIG. 3.9 U-TUBE MANOMETER FOR DIFFERENTIAL PRESSURE

the well, independently of the micrometer, so that the meniscus in the inclined tube coincides with the index when the micrometer reads zero. With a differential pressure applied between the well and the upper end of the inclined tube, the meniscus moves away from the index. It is brought back to coincidence by raising the well with the micrometer screw. The micromanometer reading then measures the differential pressure in terms of head of the manometer liquid. Since this is a null method, it is capable of refinement to high precision.

3.3.5 Fortin Barometer. A Fortin-type barometer (Fig. 3.13) is an absolute pressure mercury manometer specifically designed for the purpose of measuring atmospheric pressure. It comprises a vertical glass tube of 6.35 mm (0.25 in.) bore or larger for more precise instruments, sealed at its upper end, and with its lower end immersed in a cistern of mercury. The upper end of the tube is evacuated and the surface of the cistern mercury is exposed to ambient atmospheric pressure which forces mercury to rise in the tube to a height corresponding to the atmospheric pressure. The level of the mercury meniscus in the tube is measured by a vernier index moveable relative to a fixed graduated scale.

Copyright ASME International
Provided by IHS under license with ASME
No reproduction or networking permitted without license from IHS
Not for Resale

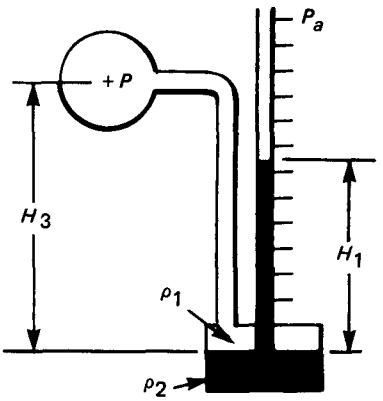

$P = g\,(\rho_2 H_1 - \rho_1 H_3) + P_a$
where notation is the same as in Fig. 3.8

FIG. 3.10 CISTERN MANOMETER

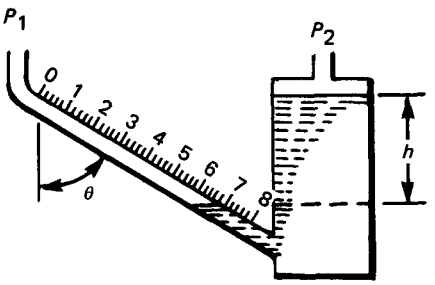

FIG. 3.11 INCLINED MANOMETER

The level of mercury in the cistern is adjusted to a fixed reference point of ivory by means of a displacer screw operating against the flexible bottom of the cistern. The tip of the ivory point corresponds to the zero of the reading scale. Readings must be corrected for nonstandard temperature, gravity, and capillary depression which may be computed, and also for instrument imperfections which can only be detected by comparison calibration.

3.4 PRESSURE TRANSMITTERS

The previous paragraphs dealt with devices for converting a pressure into a mechanical analog of that pressure. For example, the manometer exhibits a difference in the height of a liquid column. For practical reasons, it is difficult to transmit these mechanical signals over large distances. With the advent of modern control systems, however, the need developed for this transmission capability. Pneumatic transmission was first to be employed and still enjoys a worldwide acceptance. Subsequently, with evolving refinements in components and techniques, electronic instrumentation became a practical means for transmitting information over even greater distances. Transmission of signals representing measured pressure is frequently accomplished by varying an air pressure through tubing or an electrical current through wires to the remote location.

How these pneumatic and electronic signals are derived from a pressure signal is the subject of this Section. A transmitter or a transducer is a device which contains a sensing element, a detector, and a sender (a means for transmitting the sensed signal to a remote location). Three concepts are needed at this point:

(*a*) *sensing element* — a device which receives a pressure signal and converts it to information useful in another form;

(*b*) *detector* — a device which converts a sensing element force or motion into a useful signal;

(*c*) *sender* — a device which amplifies and/or converts the detector signal into a transmittable signal. Sometimes the detector and sender are one and the same.

Implicit in the use of a transmitter is a *receiver* to detect the remote signal. Beyond mentioning the need for such devices, they will not be discussed in this work.

Basically, all pressure transmitters convert a pressure into either a force or displacement, and then use the detector/sender to remotely indicate that force of displacement.

3.4.1 Sensing Elements

3.4.1.1 Elastic Sensing Elements. Elastic sensing elements include diaphragms, bellows, and Bourdon tubes. There are many design variations of each, including hybrid designs that combine features of both diaphragms and bellows. The purpose, in each case, is one of the following: (1) to convert pressure change to force change, (2) to convert pressure change to displacement, or (3) to act as an interface between fluids while transmitting pressure, undiminished from one to the other.

Copyright ASME International
Provided by IHS under license with ASME
No reproduction or networking permitted without license from IHS
Not for Resale

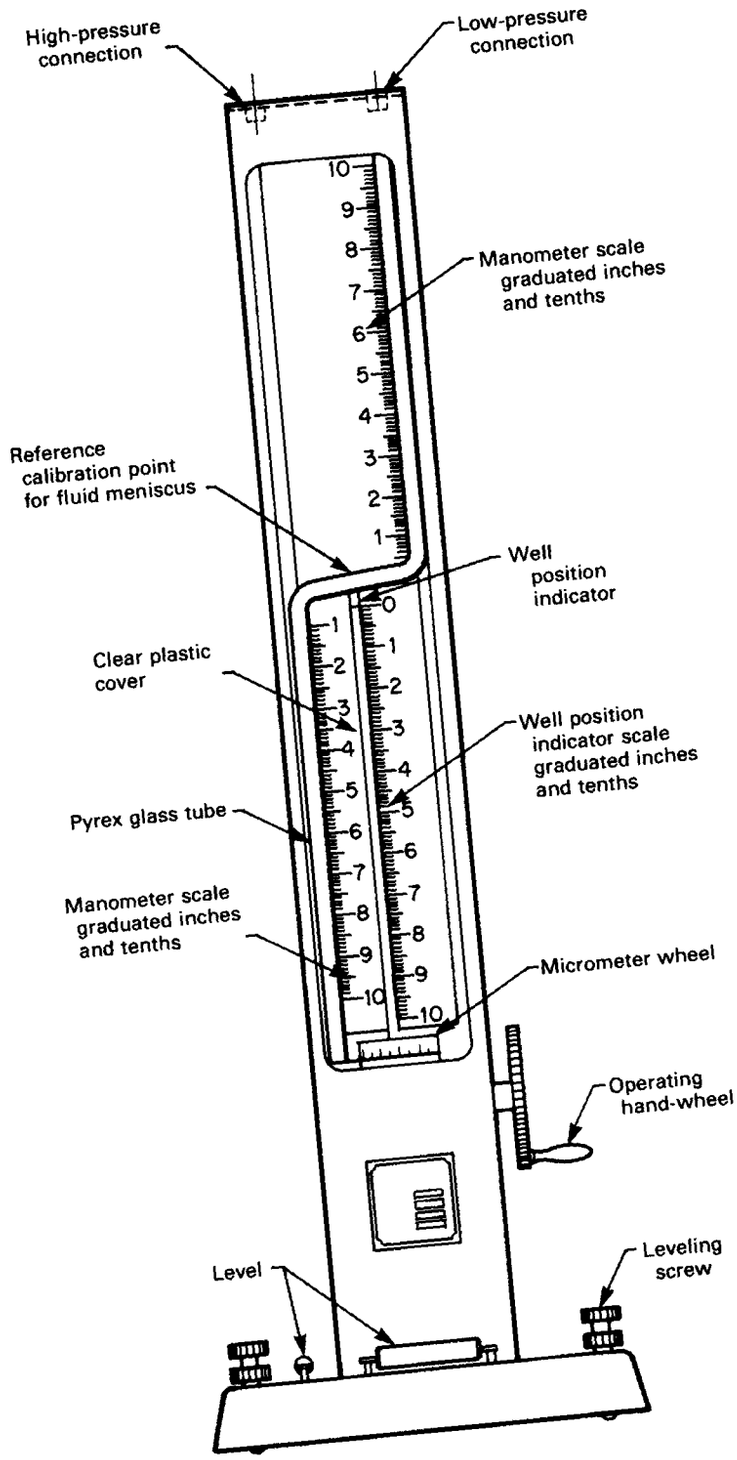

FIG. 3.12 MICROMANOMETER (NULL READING)

Copyright ASME International
Provided by IHS under license with ASME
No reproduction or networking permitted without license from IHS
Not for Resale

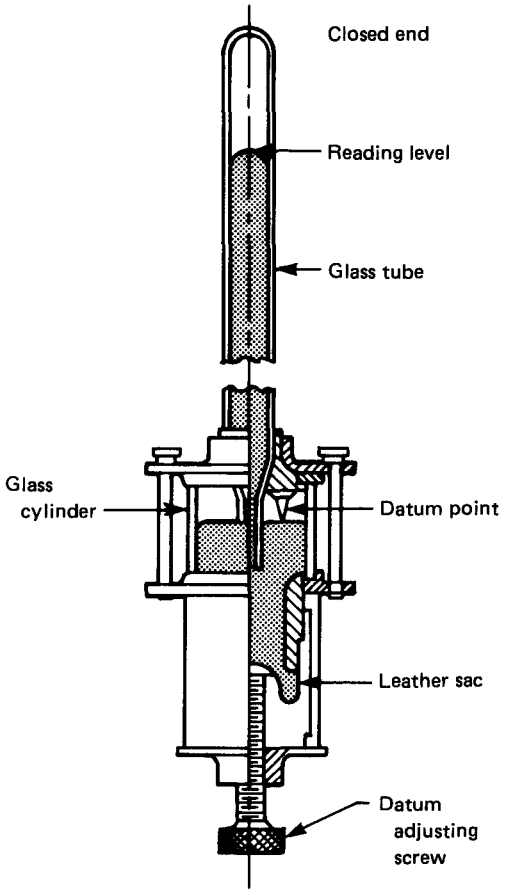

FIG. 3.13 FORTIN BAROMETER

(a) Diaphragm. A diaphragm is a pressure-responsive membrane, supported at its outer perimeter. When used to generate force or displacement, the detector is attached to a central point or disk substantially in the same place as the perimeter.

Diaphragm sensing elements cover the pressure range from less than 250 Pa (1 in. of water) in draft gages and transmitters to 140,000 kPa (20,000 psig) in instrumentation for plastic extruding equipment. For very low pressures, the sensing diaphragm will be quite large and probably have a large-diameter rigid center disk for maximum effective area. For the measurement of high pressure, the diaphragm diameter may be as small as 7.5 mm (0.3 in.).

Used as a displacement element, the important performance characteristics are travel (including its linearity with applied pressure), hysteresis, energy (see para. 3.4.2.2), and drift at the extremes of the rated pressure range.

When the travel of a single metallic diaphragm is insufficient for the application, pairs of diaphragms can be assembled into capsules by connecting their outer perimeters (e.g., an aneroid-barometer capsule), and several capsules can be fastened together at their center disks to form a capsular stack. A hole through the interior center disks allows the applied pressure to simultaneously inflate all the capsules, and the stack travel is equal to the sum of the individual capsule travels. Thus, multiple diaphragms can be stacked to act as a bellows, and welded assemblies of this type are commonly marketed as "welded bellows."

When used as a force element, the most important performance characteristic is effective area. This is the area which, when multiplied by the applied pressure, produces a force at the diaphragm center. It is different from the actual projected surface area, because, unlike a piston, the outer perimeter of a diaphragm is supported, and some of the force on the actual area is resisted by this support. The remainder is the useful force and it is resisted by whatever is attached to the diaphragm center. For a flat, circular, *uniformly corrugated* diaphragm that is free from radial biasing forces, the effective area may be calculated by the formula [12]:

$$A_e = \pi \frac{D^2}{12} \left[1 + \frac{d}{D} + \left(\frac{d}{D} \right)^2 \right]$$

where

A_e = effective area
D = outer clamping diameter
d = diameter of rigid circular center disk

By inspection, it is seen that a large center disk produces a large effective area. The center disk, however, reduces the surface available for flexing, thereby increasing the stiffness and reducing the travel.

Most diaphragms are used in such a way that they can neither be classified as purely force or displacement elements, but must partially perform as both. This situation is handled by determining the effective area and the spring rate. For an applied pressure, the useful force at a required travel is found by subtracting the product of spring-rate times travel from the product of effective area times the applied pressure. It is assumed that the spring rate remains constant over the required travel. Indeed, variations in either the spring rate or effective area over the required travel result in nonlinearity of motion and force.

Copyright ASME International
Provided by IHS under license with ASME
No reproduction or networking permitted without license from IHS
Not for Resale

Diaphragm materials are selected both for their physical properties and for compatibility with the materials which they contact. They include a large variety of elastomers and metals.

(1) Elastomers. Elastomers are well suited for many applications, particularly when reinforced with a fabric insert. They can be molded with corrugations to increase their linear travel and can be made extremely flexible to respond to small changes in applied pressure. For sensor applications, they are frequently used with external spring systems. Elastomer diaphragms are widely used in pneumatic valve actuators, pneumatic relays and control equipment, and in devices operating at very low gage pressures (draft range). An important concern to the user of instrumentation with elastomer diaphragms is the extreme operating temperatures. Does the diaphragm remain sufficiently flexible at low temperature to allow a satisfactory response time? Will it permanently deform at high temperature, causing reduced service life or a deterioration of performance?

(2) Metallic Diaphragms. Metallic diaphragms are less flexible and have less travel than similar designs made from elastomers, but they also have many superior features. Properly selected for the application, they can provide excellent corrosion resistance and undiminished performance at extreme temperatures. They can be welded into liquid-filled systems that must withstand continuous vacuum service. They can also be designed to perform with very low hysteresis and to have virtually no long-term drift. Applications include field-mounted transmitters and transducers, recorders, barometers, and miscellaneous process control equipment.

(b) Bellows. Bellows used for pressure measurement usually have the shape of a hollow cylinder with one end closed and sidewalls deeply corrugated to allow longitudinal force or motion in response to the applied pressure. This pressure may be applied to either the inside or the outside, but the preferred loading for best performance is from the outside, operating the bellows in compression.

Bellows can be molded from elastomers, be formed from metal tubing either hydraulically or by rolling, or be fabricated from center perforated sheet-metal diaphragms, alternately welded together at the centers and outsides. Very small, thin-walled bellows can be made from certain metals, such as nickel, by plating or vacuum-depositing onto a formed core which is later melted, dissolved, or chemically removed.

In size, bellows range from effective areas less than those available in diaphragms to those equally as large. They are used as force elements where diaphragms would be too stiff, and as displacement elements where the required travel is too great for a single diaphragm or diaphragm capsule.

3.4.1.2. Inelastic Sensing Elements. Unlike the elastic sensing elements, an inelastic element does not oppose the pressure applied to it. It is, in fact, designed to avoid opposing it. It acts only as a piston to sum the pressure applied over its effective area and transmit that force to a secondary element.

(a) Rolling Diaphragms. Rolling diaphragms can function both as diaphragm and bellows. They are made from elastomers, often with fabric reinforcement, to provide a positive seal in piston and cylinder applications. Clearance between the piston and cylinder is kept large enough for a single diaphragm corrugation to roll between the cylinder wall and piston wall as the piston moves through its stroke. Typical diaphragm thickness at the corrugation is of the order of 0.25 mm (0.01 in.) depending upon the material, the maximum pressure differential, and the piston-to-cylinder clearance.

The advantages of this type of diaphragm include a high ratio of effective area-to-cylinder area, a constant effective area, much more travel than available in other diaphragm designs, low spring rate, and the ability to be used with fairly high pressures to approximately 3.4MPa (500 psi). Limitations are found in the physical and chemical properties of the elastomer that is selected.

(b) Bell-Type Element. The bell-type element is generally useful in the range between 0.25 to 2.5 kPa (1 to 10 in. H_2O). It is a simple device as shown in Fig. 3.14. When $P_1A_1 = P_2A_2$, the weight of the bell and force exerted by the counterbalancing spring cause the bell to rest on the bottom of the vessel. A pressure applied to the underside of the bell will cause it to rise to a new equilibrium point which just balances the increased force exerted by the new pressure according to the equation:

$$P_2 = \frac{P_1A_1 + Mg - K(X - X_o) - B}{A_2}$$

where

P_1 and P_2 = applied pressures
A_1 and A_2 = effective areas of top and bottom surface of bell
K = spring constant of the counterbalance
$X - X_o$ = vertical displacement of the bell
B = buoyant force
M = mass of bell
g = local acceleration of gravity

Copyright ASME International
Provided by IHS under license with ASME
No reproduction or networking permitted without license from IHS
Not for Resale

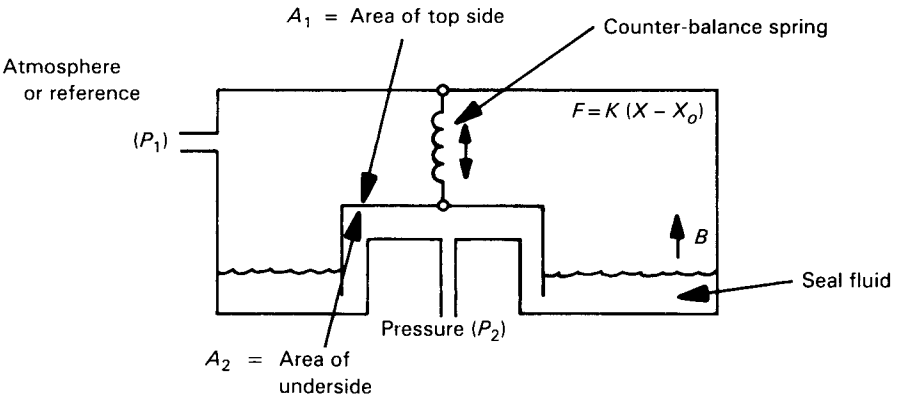

FIG. 3.14 BELL-TYPE ELEMENT

Note that all terms except X are constant and can be nulled, leaving P_2 proprotional to displacement. This device is also capable of measuring differential pressure if $A_2 = A_1$.

As with the manometer, the seal fluid must be compatible and immiscible with the process fluid. Frequently, mercury is chosen.

(c) Slack or Limp Diaphragm. The slack or limp diaphragm is usually employed for pressures between 0.1 and 5 kPa (0.5 to 20 in. H_2O) and is frequently associated with furnace-draft and air-duct pressure measurements. It employs a flexible, non-metallic diaphragm, frequently of leather or a thin, neoprene-like material. The pressure acts against the diaphragm (see Fig. 3.15) causing it to deflect a flat spring. The design of the spring and associated mechanism is such that deflection is proportional to pressure. By enclosing both sides of the diaphragm, differential pressures less than 70 Pa (0.3 in H_2O) can also be measured.

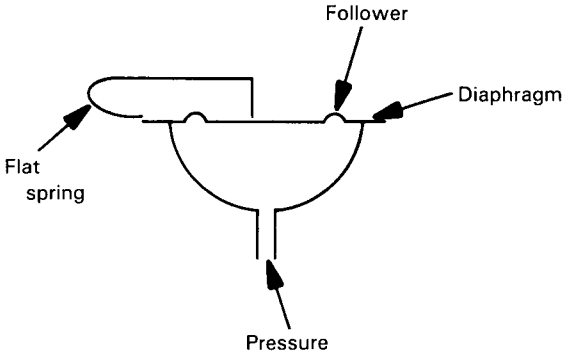

FIG. 3.15 SLACK DIAPHRAGM

3.4.2 Detectors. One of the basic means for pressure sensing is to convert pressure into a corresponding force or displacement. Once in that form, a number of devices can be employed to detect that displacement or force. Some of these devices are complete; that is, they are a complete detector/sender. Others are employed as part of a system used to detect and balance force.

3.4.2.1 Force-Balance Concept. This refers to a concept in which the known effective area of a sensing element may be applied to advantage in externally powered instrumentation. In such a system, the unknown pressure acts against the sensing element to produce an input force. This force acts through a lever system of low spring resistance to actuate a very sensitive detector of displacement. In a pneumatic device, this detector will be a nozzle-baffle system; in an electronic design it may be a vane that is part of a magnetic inductor circuit. In either case, small changes in position cause the output signal to change. This change is used to produce a feedback force equal to and opposing the force caused by the unknown input pressure. Thus, the system is maintained in continuous force balance. It is important to understand that the motion of the sensing element, when used in a force-balance system, is less than 0.25 mm (0.01 in.).

The purpose of using a force-balance system with an elastic sensing element might be to gain one or more of the following advantages:

(a) extend the working pressure range of the element;

(b) increase the fatigue life of the element;

Copyright ASME International
Provided by IHS under license with ASME
No reproduction or networking permitted without license from IHS
Not for Resale

(c) improve performance characteristics such as calibration, linearity, and hysteresis;

(d) reduce volume transfer;

(e) allow closer stops for better overrange protection;

(f) avoid the problem of friction in linkages;

(g) provide, in transmitters, the ability to greatly suppress or elevate the zero of the output signal, using biasing springs in the lever system. This is important when small variations in pressure, occurring over a limited range, are all that is of interest.

Sometimes there is an amplifying device in the force-balance circuit between the displacement detector signal and the instrument output. In pneumatic transmitters, it is the output relay which increases the open loop gain and also provides output air flow capacity (volume of air per unit time). This relay may itself be a force-balance device (see Figs. 3.16A and 3.16B). The electrical equivalent may be an AC amplifier with electronic circuitry to convert the amplified AC signal to a DC output, usually 4 – 20 or 10 – 50 milliamperes (see Fig. 3.17).

Feedback force, either linearly proportional to the output signal, or proportional by some other desired function such as square root, can be generated by various means. In a pneumatic transmitter, the output pressure signal might simply pressurize a feedback bellows. In a pneumatic pressure recorder or indicator, the position of a pen or pointer linkage can be used to extend a feedback spring connected to a servo force beam. In an electronic pressure transmitter, the output current signal can be fed into a force coil in a permanent magnetic field.

3.4.2.2 Displacement Elements. If a sensing element is used so that the applied pressure is dissipated primarily in moving the element against some spring force, it is termed a *displacement element.* (Frequently, the misnomer "motion balance" is also applied to this class of instruments.) This condition is satisfied by the spring rate of elastic elements or by the external springs used with inelastic elements.

Pressure is then related to displacement of the element in the following manner.

$$P = \frac{-k\,x}{A}$$

where

x = displacement
A = effective area of element
k = spring rate, which may be dependent upon displacement but can usually be considered constant over the working range
P = pressure

The dependence of spring rate on displacement is minimized in the design of the sensing element. However, the motion must then be converted to a useful indication. Inevitably, there are frictional or reaction forces to overcome and these losses must be supplied by the sensing element. In order that these forces produce small errors, the energy from the element must be sufficiently high, and the instrument manufacturer must select a detector that will minimize the losses.

3.4.2.3 Detector Types. Several types of detectors exist which can be used to implement a force-balance or displacement-detecting transmitter. These include, but are not limited to, nozzle-baffle arrangements, LVDTs, capacitance detectors, photocells, potentiometers, strain gages, and inductance devices. The most commonly used devices are discussed below.

(a) *Nozzle-Baffle (Flapper-Nozzle).* The mechanical simplicity and inherent reliability of nozzle-baffle systems account for their extensive use as displacement detectors in the instrument field. A typical system, shown diagramatically in Fig. 3.18, has a supply orifice and a nozzle connected by a nozzle tube and associated capacity chamber C.

When the distance X between the nozzle and a baffle plate becomes sufficiently small, flow from the nozzle is restricted, and the nozzle backpressure P_2 increases. It is this pressure that is the useful output of the system.

Figure 3.19 shows how nozzle backpressure varies as a function of the nozzle-baffle gap. Nozzle sensitivity, defined as the ratio of change of nozzle backpressure with change of baffle gap, is the slope of this curve. Its units might be kPa/mm or psi/in. The useful part of the curve is where the slope is high and nearly linear. Nozzle sensitivity can be increased by either increasing the diameter of the nozzle or by decreasing the diameter of the supply orifice.

A practical limitation, however, is that the baffle on higher sensitivity systems must operate closer to the nozzle, increasing the need for nearly perfect alignment of the nozzle with the baffle.

The time constant of a nozzle-baffle system takes the form of a linear lag identical to that obtained from a simple RC (resistance-capacitance) system. Equivalent resistance, however, is not equal to total pressure drop divided by total flow.

As nozzle backpressure varies with the distance of the baffle from the nozzle, so the nozzle reaction force is also a variable. This effect is probably best treated, in

Copyright ASME International
Provided by IHS under license with ASME
No reproduction or networking permitted without license from IHS
Not for Resale

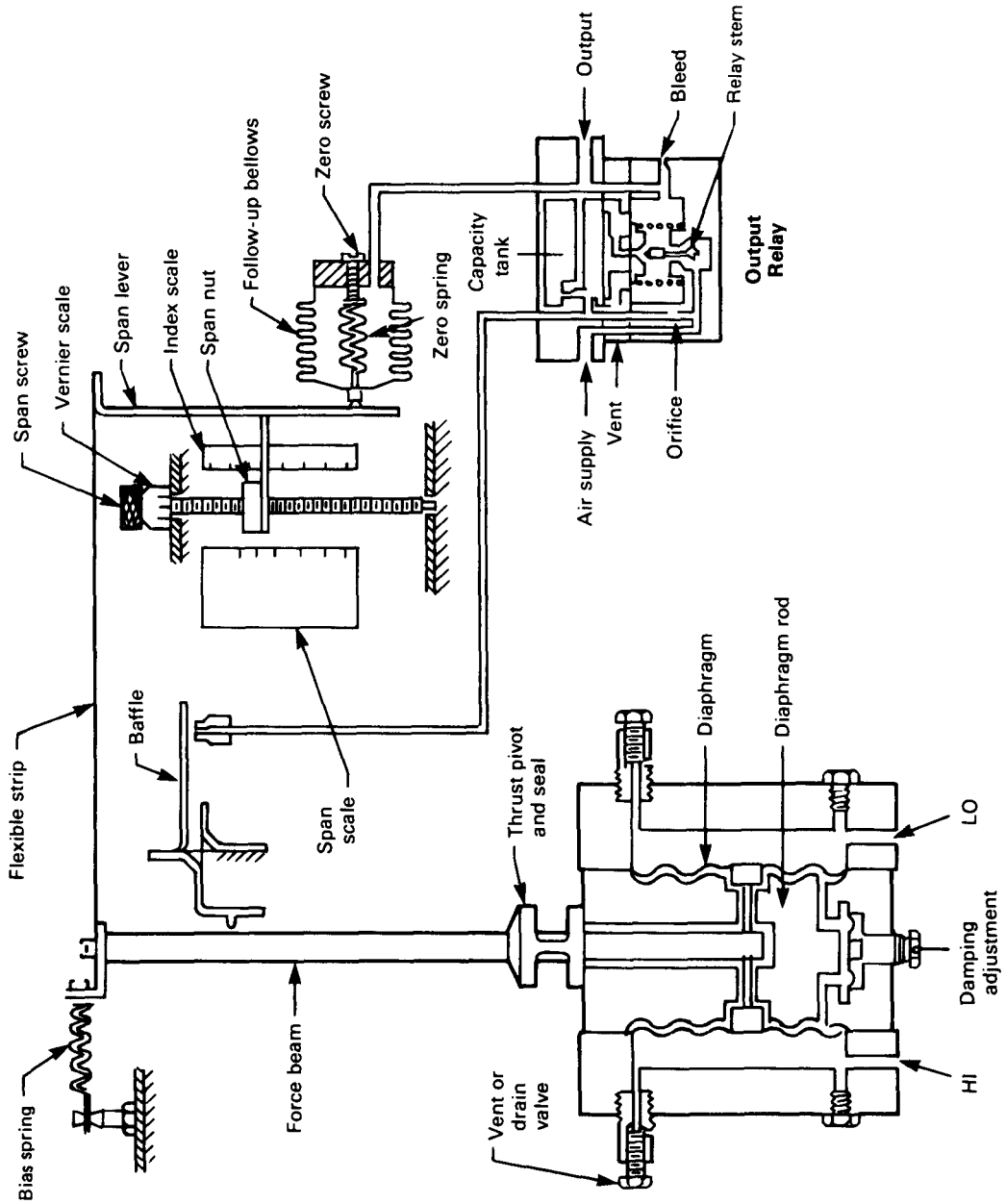

FIG 3.16A SCHEMATIC OF A PNEUMATIC FORCE BALANCE DIFFERENTIAL PRESSURE TRANSMITTER
(Courtesy of Taylor Instrument Company)

Copyright ASME International
Provided by IHS under license with ASME
No reproduction or networking permitted without license from IHS
Not for Resale

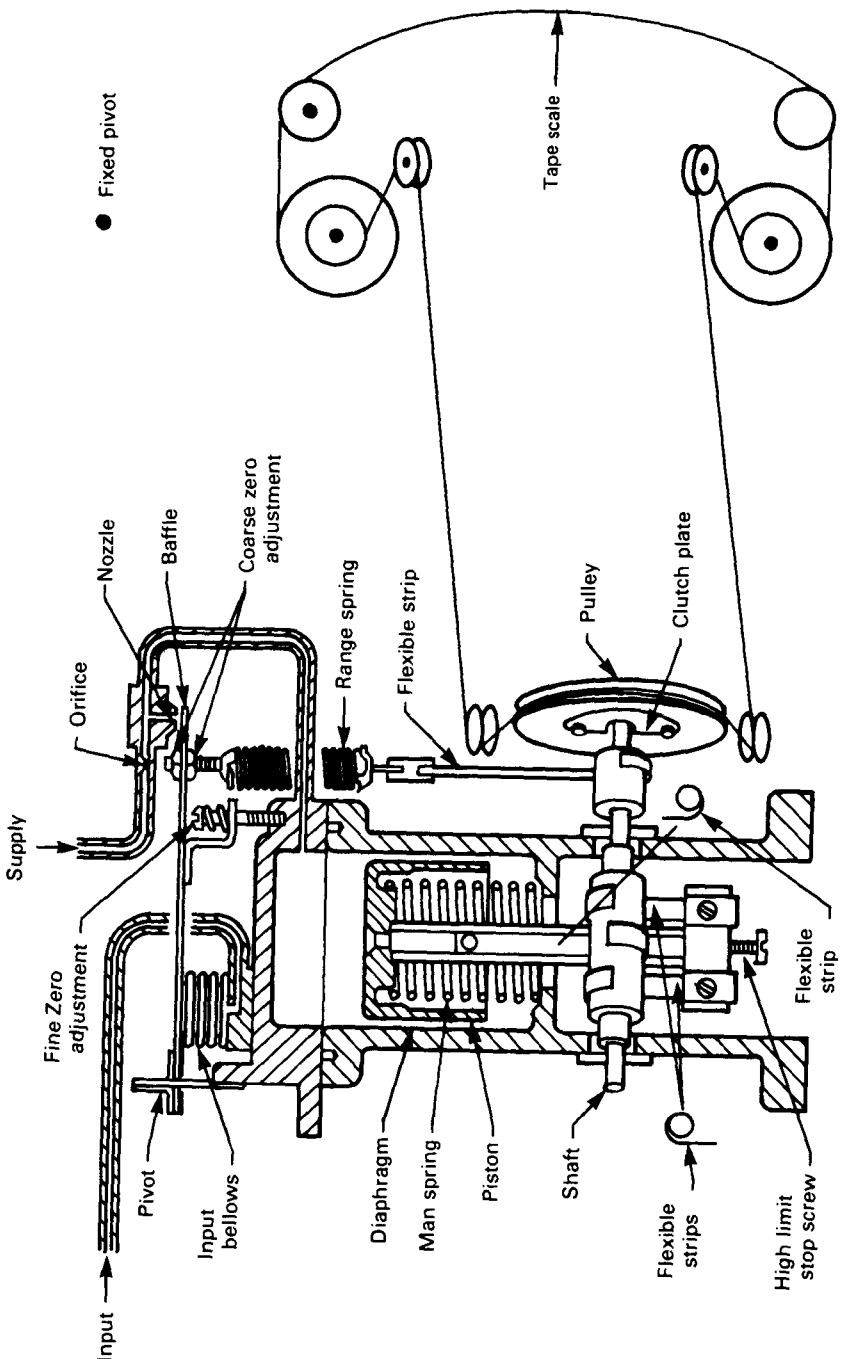

FIG. 3.16B SCHEMATIC OF A PNEUMATIC FORCE BALANCE TAPE DRIVE SERVO
(Courtesy of Taylor Instrument Company)

Copyright ASME International
Provided by IHS under license with ASME
No reproduction or networking permitted without license from IHS

Not for Resale

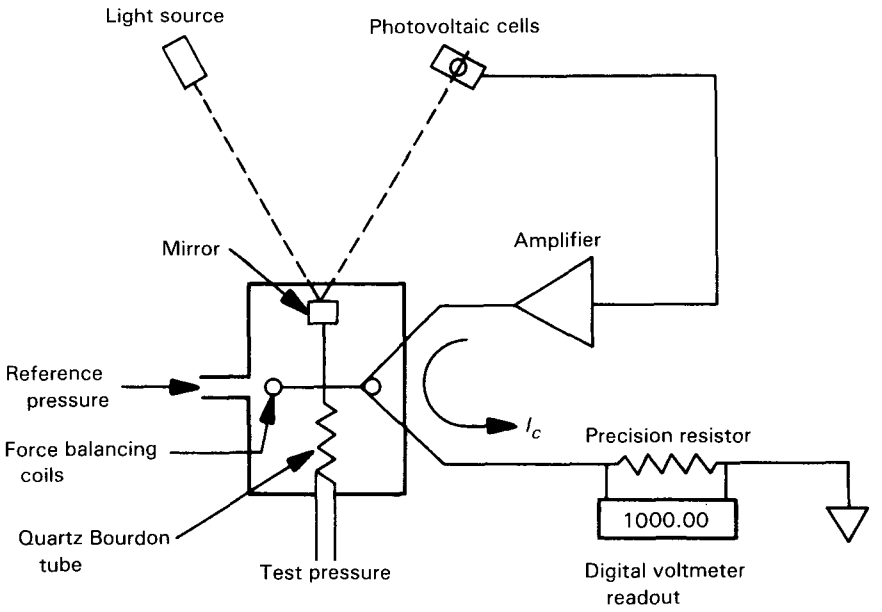

FIG. 3.17 SCHEMATIC OF AN ELECTRONIC FORCE BALANCE DIFFERENTIAL PRESSURE TRANSMITTER
(Courtesy of Ruska Instrument Corp.)

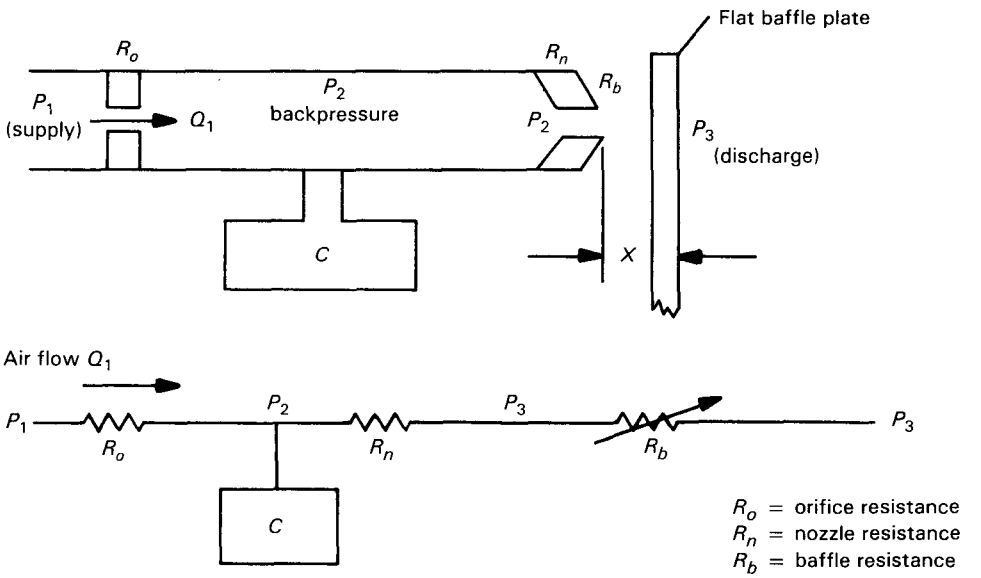

FIG. 3.18 TYPICAL NOZZLE-BAFFLE SYSTEM

Copyright ASME International
Provided by IHS under license with ASME
No reproduction or networking permitted without license from IHS
Not for Resale

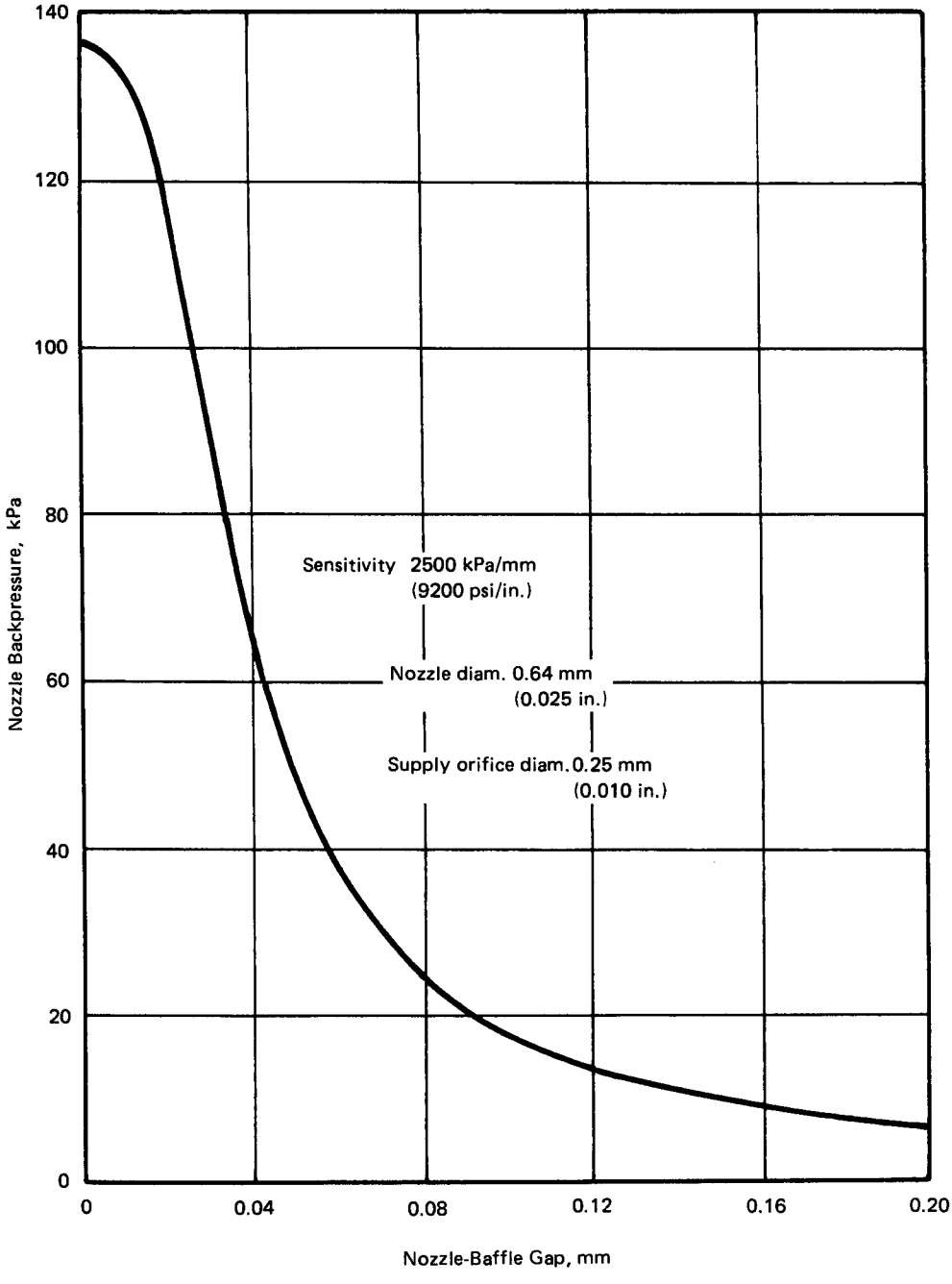

FIG. 3.19 NOZZLE BACKPRESSURE VERSUS GAP FOR AN ELEMENTARY NOZZLE BAFFLE

Copyright ASME International
Provided by IHS under license with ASME
No reproduction or networking permitted without license from IHS
Not for Resale

the design of a pneumatic system, as an equivalent spring constant:

$$k_n = S_n A_n$$

where S_n is the nozzle sensitivity and A_n the nozzle area. The air consumption of a nozzle-baffle system is dependent only upon the orifice size, the supply pressure, and nozzle backpressure. When the flow is subsonic ($P_2 > 0.53P_1$), as in the normal range of instrument operation, and the orifice is sharp-edged, air consumption may be computed from

$$Q_1 = \frac{C_o A_o}{p_a} \cdot \sqrt{P_2(P_1 - P_2)}$$

where

Q_1 = flow of free air (referenced to atmospheric pressure) through the supply orifice
C_o = velocity of sound in air = 344.2 m/sec (13,550 in./sec) at 21°C (70°F)
A_o = orifice area
p_a = atmospheric pressure
P_1 = supply pressure (absolute)
P_2 = nozzle backpressure (absolute)

Successful operation of a nozzle-baffle system depends primarily upon proper alignment and a good air supply. The baffle should be capable of capping the nozzle by normal driving means (i.e., without additional force) so that maximum backpressure is very close to supply pressure and, at maximum working backpressure, the nozzle and baffle are not in contact. The supply air must be constant pressure for repeatable backpressure output and should be free of contamination that could plug the supply orifice or cause baffle buildup. For low-temperature operation, it is important that the supply air dew point be low enough, about 10°C (18°F) below ambient, to avoid ice formation.

(b) Capacitance Detector. A commonly used variable-capacitance type of pressure transducer is the differential design, a double-sided sensor shown in Fig. 3.20. It consists of a tensioned metal diaphragm positioned between two fixed electrodes. The electrodes are excited by an AC signal of fixed frequency, such as 10 kHz. When pressure deflects the diaphragm, the change in capacitance between the diaphragm and each fixed electrode results in an AC output voltage at the applied fixed frequency and an amplitude proportional to the deflection. The result is a high output pressure-to-electrical signal conversion with excellent signal-to-noise characteristics, allowing very high amplification of very small pressures (deflections). With proper choice of diaphragm thickness, sensors of this construction are made with full scale spans up to 20,000 kPa (3000 psi) and down to 13 Pa (0.1 mm Hg) for measuring gas pressures with a dielectric constant near unity. Pressure changes as small as 1×10^{-6} of sensor full range can be detected.

Sensor nonlinearity can be made as low as 0.01% of reading by special processing and linearizing techniques. More typically, sensors are made to 0.05% of reading nonlinearity. Hysteresis is typically 0.01% – 0.02% of reading.

A variation of the double-sided sensor is a single-sided construction that is useful in absolute pressure measurements of extremely corrosive gases (reference side evacuated and sealed) or unidirectional differential pressure measurements where the reference side is exposed to a noncorrosive and clean gas (Fig. 3.21). Since the electrode assembly is removed from the measuring side, the dielectric constant of the material being measured is no longer a factor. Thus, a single-sided construction can be used with conductive, radioactive, or heavy organic media and gases at high pressure. The sensing technique can properly be called "curvature sensing" versus "deflection sensing" for the double-sided sensors.

Because of the very small diaphragm motions that correspond to full pressure span in either of these designs, temperature will often have a significant effect on zero stability, span, and linearity. The double-sided sensor design, however, will have some advantage in that symmetrical structural changes tend to cancel at zero. Some sensors are maintained at a constant temperature by integral heaters proportionally regulated to a temperature slightly above the ambient in which they operate.

Pressure and differential-pressure transmitters for the process industries also often use capacitance detectors to convert the measurement to an electrical output signal. Typically, these transmitters enclose the sensing diaphragm and fixed electrodes in a liquid dielectric filling material that is separated from the process fluids by means of integral seal diaphragms. These diaphragms and their enclosing flanges can be made from very corrosion-resistant materials to handle practically any process fluid.

(c) Inductance Devices [13]. The inductance of a coil is determined by its number of turns (squared), its geometric form, and the effective permeability of the surrounding material. Using a single coil, variations caused in any of these parameters will result in a change of the coil's *self-inductance,* making possible many designs of displacement detectors. Some use a

Copyright ASME International
Provided by IHS under license with ASME
No reproduction or networking permitted without license from IHS
Not for Resale

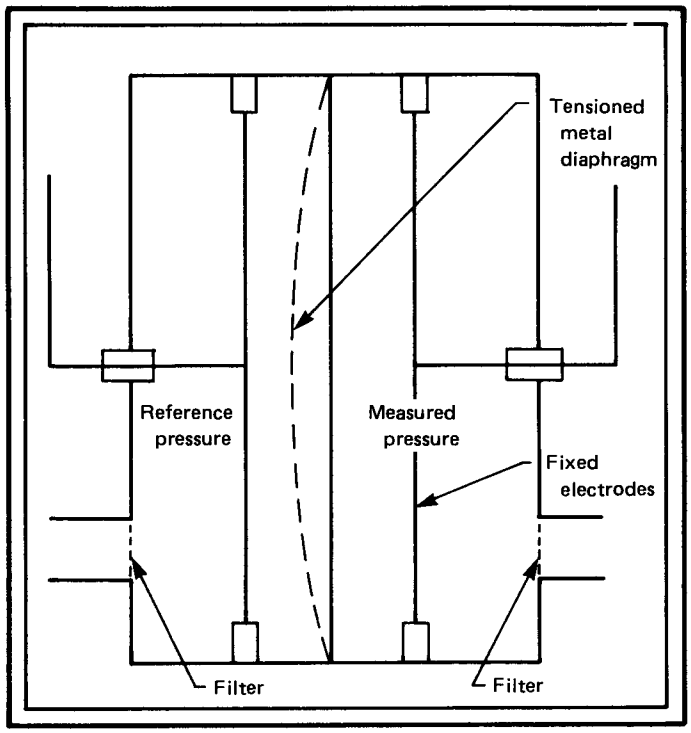

NOTE:
Filters used to prevent entry of particles that could create shorts.

FIG. 3.20 SCHEMATIC REPRESENTATION OF A DOUBLE-SIDED VARIABLE CAPACITANCE SENSOR HEAD

Copyright ASME International
Provided by IHS under license with ASME
No reproduction or networking permitted without license from IHS
Not for Resale

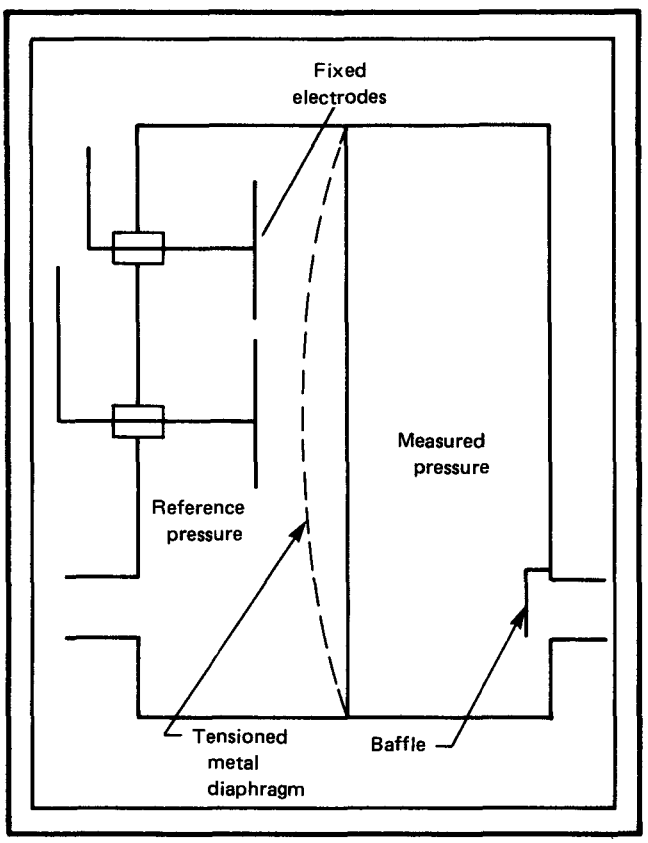

NOTE:
Baffle used to keep high-speed particles from impinging on the diaphragm.

FIG. 3.21 SCHEMATIC REPRESENTATION OF A SINGLE-SIDED VARIABLE CAPACITANCE SENSOR HEAD

Copyright ASME International
Provided by IHS under license with ASME
No reproduction or networking permitted without license from IHS
Not for Resale

wiper action, as in a variable potentiometer, to change the number of turns. Others change the position of a highly permeable core in the center of the coil, or change the length of an air gap in an otherwise closed magnetic path of iron extending through the center of the coil (variable reluctance). For the purpose of displacement detection in instrumentation, those designs that avoid friction contact of the moveable member are the more useful.

Using multiple coils, the input displacement can be made to vary the *mutual-inductance* (magnetic coupling) between the coils. Mutual-inductance systems often differ from self-inductance systems only by the choice of connecting the coils in series or parallel.

Higher sensitivity is obtained in inductive detectors when they are designed so that an input change simultaneously causes an increase in one inductance and a decrease in another. Then, either the difference or the ratio of two inductances is used as a measure of the displacement. Other advantages of using a difference or ratio signal rather than the total inductance include greater immunity to external magnetic fields and to variations in temperature, supply voltage, and supply frequency. Figure 3.22 illustrates an inductive displacement detector that uses variable reluctance to provide differential or ratio output.

(d) The Linear Variable Differential Transformer (LVDT). The LVDT is an electromechanical transducer that produces an electrical output proportional to the displacement of a separate moveable core. As shown in Fig. 3.23, three coils are equally spaced on a cylindrical coil form. A rod-shaped magnetic core positioned axially inside this coil assembly provides a path for magnetic flux linking the coils. When the primary or center coil is energized with alternating current, voltages are induced in the two outer coils. In the transformer installation, the outer or secondary coils are connected in series opposition, so that the two voltages in the secondary circuit are opposite in phase, the net output of the transformer being the difference of these voltages. For one central position of the core, this output voltage will be zero. This is called the balance point or null position.

When the core is moved from this balance point, the voltage induced in the coil toward which the core is moved increases, while the voltage induced in the opposite coil decreases. This produces a differential voltage output from the transformer which, with proper design, varies linearly with change in core position.

A preferred schematic representation of the LVDT is shown in Fig. 3.23.

The mechanical features of the LVDT include complete absence of friction and mechanical hysteresis, extremely rugged moving element, and mechanical isolation of moving element.

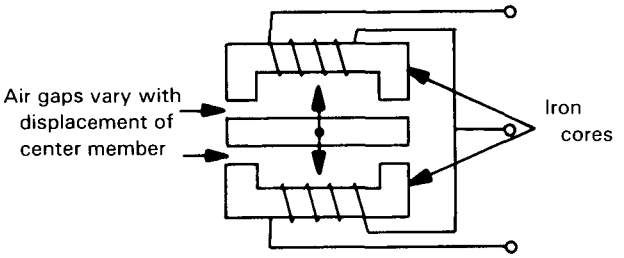

FIG. 3.22 INDUCTIVE DISPLACEMENT DETECTOR

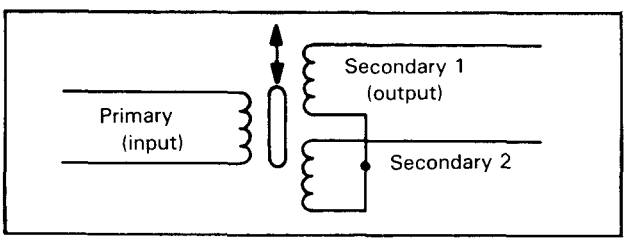

FIG. 3.23 PREFERRED SCHEMATIC REPRESENTATION OF THE LVDT

The electric features of the LVDT include voltage output accurately proportional to core displacement, infinite resolution, and linear response characteristic (unlike potentiometer).

(1) Pressure Transducer. The LVDT is used to measure the displacement caused by the expansion of a Bourdon tube or diaphragm capsule when subjected to pressure. The design of the pressure-sensing element is such that it causes a linear motion in the order of 2 mm (0.080 in.) of travel. This travel is converted into an electrical signal by the LVDT. Typically, the primary of the LVDT is driven by a 12-volt square wave and the secondary produces an output amplitude modulated by the stroke of the core. This output is rectified and filtered to provide a DC level proportional to the pressure applied (see Fig. 3.24).

The DC output can be either current or voltage with a common form being 4 mA to 20 mA DC, linearly proportional to the pressure applied.

(2) Limitations. A basic limitation is the relatively high amount of motion required to produce an output. This presents no particular problem for high-core travel elements (0.080 in. F.S.) but produces serious

Copyright ASME International
Provided by IHS under license with ASME
No reproduction or networking permitted without license from IHS
Not for Resale

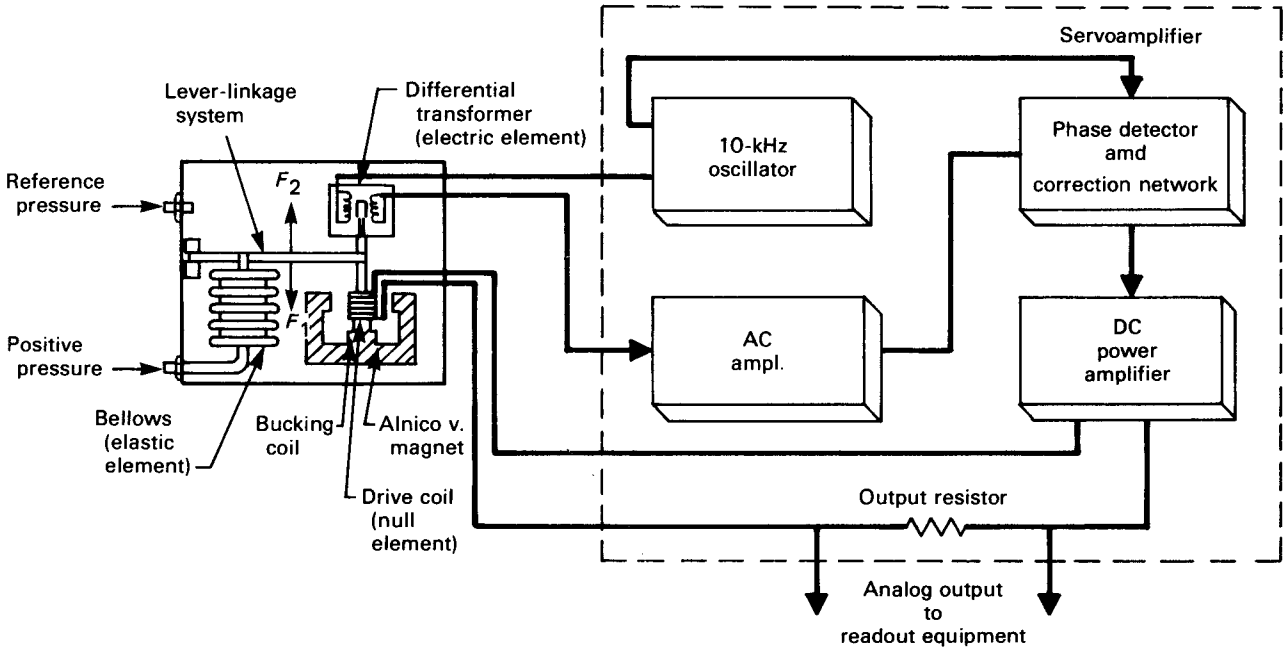

FIG. 3.24 LVDT USED AS A PRESSURE TRANSDUCER
(Courtesy of IMO Delaval Inc., CEC Instrument Division)
(Reprinted from "Fundamentals of Temperature, Pressure and Flow Measurements," by R. P. Benedict, copyright © 1985 John Wiley & Sons, reprinted by permission of John Wiley & Sons, Inc.)

Copyright ASME International
Provided by IHS under license with ASME
No reproduction or networking permitted without license from IHS
Not for Resale

shortcomings in zero stability (mechanical and electrical) at small-core travels (< 0.010 in. F.S.).

(a) Zero Instability. Zero instability is not only a thermal but also a highly position-sensitive error due to the fact that the action of gravity on the core produces motions that are a high percentage of the F.S. travel. For example, when used with a core stroke of 0.010 in. F.S., an LVDT can exhibit zero shifts of −0.0001 in. due to position error. This, when converted to a voltage or current output for pressure applied, could result in as much as 1% F.S. position error.

(b) Thermal Effects. Thermal effects on span and zero are linear and predictable and the effects can be compensated in the electronic circuit to better than 0.1% F.S./100°C with careful calibration. Temperature compensation in the order of 1% F.S./100°C are regularly realized with standard temperature-calibration techniques.

(c) Zero Errors. Zero errors due to position are generally not published by LVDT transducer manufacturers. However, this type of error is present in all transducers using LVDTs due to the necessary mass of the core. It is a significant factor in capsule-type sensors below 24.9 kPa (100 in. H_2O). It should be noted that the position error is not significant in zero-based units where the offset error can easily be adjusted out of the output after installation. However, in non-zero-based elements a calibrated pressure source must be applied after installation to remove the zero offset.

(3) Linearity. By carefully matching the core length to the selected LVDT, linearity correction can be introduced to correct for nonlinearity of the travel in the sensing element to the order of 0.05% F.S. or better.

(4) Hysteresis. The LVDT has no measureable hysteresis. The hysteresis present is a function of the quality of the sensing element selected.

(5) Span. The stability of the output span is a function of the electronic circuit selection. The LVDT has a highly repeatable span with infinite resolution.

(6) Thermal Effects

(a) Zero. The zero output when derived from the null of the secondary winding is affected by normal changes induced in any transformer by temperature changes. The largest effect is, however, due to mechanical shifts of the sensor, and circuit shifts, which must be compensated over the operating range.

(b) Span. The span output is affected by the change in the windings due to thermal shifts in the material selected. This error is of the same order of magnitude as the mechanical and circuit shifts, and must be compensated over the operating range.

(c) Linearity. Linearity is essentially unaffected by temperature changes.

(d) Potentiometric Detectors. This device can be made from a voltage-driven mechanism arranged so that the motion to be detected causes a change in the output voltage. The voltage divider (potentiometer) is a three-terminal resistor. Two of the terminals are connected to fixed points at either end of the resistor. A constant excitation voltage (AC or DC) is applied between them. The third terminal is connected to a sliding contact at the end of a wiper arm as shown in Fig. 3.25. As the wiper arm moves, the output voltage between the sliding contact and the lower fixed terminals changes accordingly to the relationship $e_o = \eta e_{in}$, where $\eta = R_2/(R_1 + R_2)$.

A potentiometric pressure transducer is formed when the potentiometer is used to measure displacement caused by the expansion of a Bourdon tube, bellows, or diaphragm capsule subjected to pressure. The design of these sensing elements is such that the full-span pressure change causes a linear motion in the order of 2 mm (0.080 in.) travel. This travel must be amplified by mechanical linkage, since the potentiometer requires a long stroke for accuracy and resolution (on the order of centimeters). Sometimes a pneumatic servomotor is used to provide the amplification.

(1) Features and Limitations. Potentiometric detectors and the pressure transducers using them can be small-size, lightweight, and easily installed. They are a simple electrical design, usually high-impedance (5000 ohms typical), require low power drain, and may be operated with either AC or DC excitation.

The limitations are mostly mechanical. Friction and mechanical hysteresis limit accuracy, and the potentiometer is vibration-sensitive and subject to wear of the resistive element. Normal wear can be predicted and the life made quite long in total number of cycles. An unpredictable rapid variation called "dither" causes most early failures. In a pressure transducer, dither is caused by a rapid fluctuation in pressure, centered about a given pressure. This tends to dig a hole into the resistive slide element.

(2) Typical Performance of a Potentiometric Pressure Transducer

(a) Linearity (independent): 1% F.S. from 5% to 95% of span

(b) Resolution: 0.2% to 0.4% F.S. for wire-wound elements

(c) Repeatability: Limited by resolution

(d) Hysteresis: 0.5% F.S., limited by mechanical linkage of sensing element to resistive element and by resolution

Copyright ASME International
Provided by IHS under license with ASME
No reproduction or networking permitted without license from IHS
Not for Resale

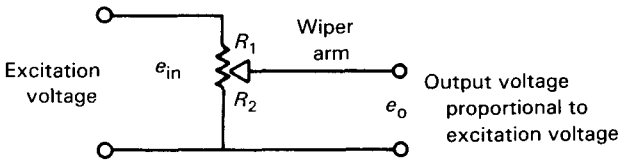

FIG. 3.25 POTENTIOMETRIC DETECTOR

(e) Ambient Temperature Effect: 3.6%/100°C (2%/100°F)

(e) Strain Gage. These gages are based upon the principle that a conductor's resistance changes with length. When a conductor is stretched within its elastic limits, and when the elongation is a small fraction of the total length, the resistance change is quite linear with length change and quite predictable for a given material. A convenient way to measure this phenomenon is a term called "gage factor."

$$\text{Gage factor } k = \left(\frac{\Delta R}{\Delta L}\right)\left(\frac{L}{R}\right)$$

where

$\frac{\Delta R}{\Delta L}$ = per unit resistance change for unit change in length
R = element resistance
L = element length

The symbol k is a dimensionless measure of the sensitivity to the change of resistance of the gage to changes in length. Typical metallic strain gages exhibit factors between 2 and 5. Semiconductor types may exhibit factors as high as 100 to 200.

Figure 3.26 illustrates the use of a strain gage for pressure measurement.

Assume that the wire has been sized and tensioned so that its initial resistance is 100 ohms. Also assume that it is initially 10 mm (0.40 in.) long. Assume that a pressure applied to the diaphragm will move the diaphragm 0.001 mm (0.00004 in.) and that the wire will not become slack with this deflection. Recall that gage factors for metals run between 2 and 5. Then the change in resistance will be (assuming $k = 5$),

$$\Delta R = k \cdot \frac{R}{L} \cdot \Delta L$$

$$= 5 \cdot \frac{100}{10} (0.001) = 0.05$$

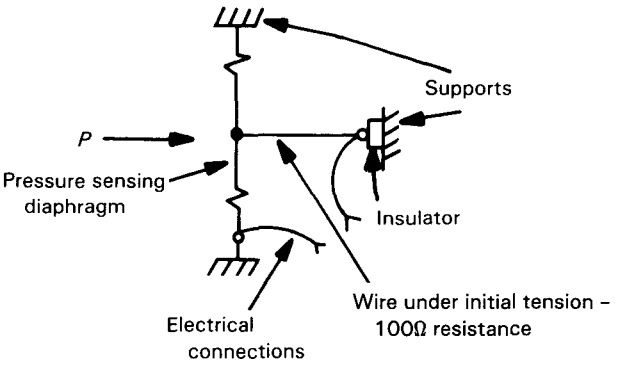

FIG. 3.26 STRAIN GAGE

or 0.05% change in resistance. Let us now apply a small current through the wire, say 10 milliamperes. Then, the initial voltage will be $0.01 \times 100 = 1$ volt. The voltage output after the pressure change will be $(100 - 0.05)(0.01) = 0.9995$ volt.

Observe several things from this example: (1) the output change is extremely small; (2) the output is not zero-based; that is, the initial value is not zero; (3) if no pressure were applied, but large temperature changes occurred, the resistance of the wire, as a general case, would change. This would give rise to a false indication of pressure. As an example, a 100°C change in temperature would produce a false signal of approximately 760 times the above calculated value.

For these and many other reasons, a different design is chosen. A list of the changes would include the following.

- The element is folded on itself several times so that, in our example, the effective element length might be 100 mm or 200 mm (4 in. or 8 in., respectively). Practical gages are, of course, much smaller.
- The Wheatstone bridge configuration is used. Reasons for this will be discussed shortly.
- Higher voltage levels are used to obtain higher output voltages.
- A higher initial resistance is generally used (120Ω or 350Ω are typical values).
- Where practical, semiconductor elements exhibiting higher gage factors can be used, with due consideration to thermal sensitivity.
- Materials having lower thermal coefficients of resistance are used.

Consider the Wheatstone bridge configuration in Fig. 3.27. Let $R_1 = R_2 = R_3 = R_4$ and let $V_1 = -V_2$. Then it follows that $V_3 = V_4 = 0$ because R_1, R_2, R_3, and R_4 constitute equal voltage dividers,

Copyright ASME International
Provided by IHS under license with ASME
No reproduction or networking permitted without license from IHS
Not for Resale

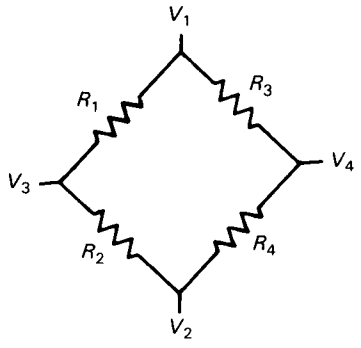

FIG. 3.27 WHEATSTONE BRIDGE CONFIGURATION OF THE STRAIN GAGE

and because $V_1 = V_2$. If we also make R_1 through R_4 of the same of material, the change in resistance value of each element will be equal with changes in temperature. Therefore, the zero output will not change with temperature.

If the elements are attached to a pressure element in such a manner that R_1 and R_4 *increase* in value and R_2 and R_3 *decrease* in value when pressure is applied, V_3 will approach V_2 and V_4 will approach V_1. The net effect is an output voltage change four times greater than if only one element were used. Typical output values are expressed as millivolts output $(V_4 - V_3)$ per volt of applied voltage $(V_1 - V_2)$. The applied voltage is called the excitation voltage and usually ranges from 3 to 15 volts. Typical values of full-scale output for metallic strain gauges are 1.0 – 3.0 mv/volt. Semiconductor types may produce up to 100 mv/volt. Variations from these values are of course possible.

Earlier designs amplified these small signals and frequently required the use of AC excitation because AC-coupled amplifiers were more gain-stable with available techniques. One trade-off in using this scheme was the need for careful compensation of phaseshifts caused by capacitance within the strain gage and interconnecting cable. With the availability of modern semiconductor devices, the use of DC excitation now predominates.

The strain gage, as described, is still sensitive to variations in temperature when its output is different from zero. Frequently, temperature-sensitive resistors, matched to the characteristics of the elements, are installed in series with the excitation voltage for full-scale temperature compensation.

The net effect is to increase or decrease the voltage on the bridge in an inverse manner to an increase or decrease in the resistance of the elements. This compensates the full-scale output of the bridge for temperature variations. An additional effect which may be handled in this manner is the thermal characteristics of the pressure-sensing element. The resistor is then chosen to compensate the net effect of temperature upon the pressure element *and* the bridge elements. Additional compensation elements are frequently used to standardize full-scale outputs, compensate for changes in effective modulus of elasticity of elastic-sensing elements, and a number of other factors. These schemes are usually of a proprietary nature for a given manufacturer.

(1) Methods of Application. The strain gage is commonly applied directly to elastic diaphragms to sense the displacement of the diaphragm. For this purpose, specially shaped gage elements can be employed. Figure 3.28 is an example of this gage type.

This gage is capable of measuring the tangential tensile strains developed at the center of the diaphragm as well as the compressive radial strains present at the outer diameter of the diaphragm.

Alternatively, the strain gages may be applied to a flexed beam or similar member to measure deflection of a spring. The elements may be individual elements or specifically designed for the application.

To isolate the element electrically and to provide support before use, the strain element is attached to a nonconductive carrier. The materials used range from paper to ceramics, with plastic or composites being the most common. Obviously, the choice of carrier and adhesive used to secure it to the pressure element depends upon several factors.

Recently, two new developments have modified the need for carriers and adhesive bonding. The first is the development of diffused silicon strain gages. These devices incorporate the diaphragm, elements, and electrical isolation in one unit. The technology resembles that used in making transistors or integrated circuits.

The other development is that of vacuum deposition or sputtering. While the techniques used to manufacture the gages are different, the results are similar. By depositing an insulator such as glass on the diaphragm and by then depositing the metallic alloy onto the insulator, a structure is formed which provides the needed bonding and isolation. The element pattern is then photographically etched onto the metallic layer.

(f) Oscillating Devices. The need for very high resolution and for digital output has led to the development of transducers in which the applied pressure varies a suitable resonance frequency. A simple example is given in Fig. 3.29. A steel wire is stretched between a diaphragm and a fixed reference point. The wire is

Copyright ASME International
Provided by IHS under license with ASME
No reproduction or networking permitted without license from IHS
Not for Resale



FIG. 3.28 FULL-BRIDGE DIAPHRAGM GAGE
(Courtesy of Micro-Measurements Division, Measurements Group, Inc., Raleigh, North Carolina, USA)

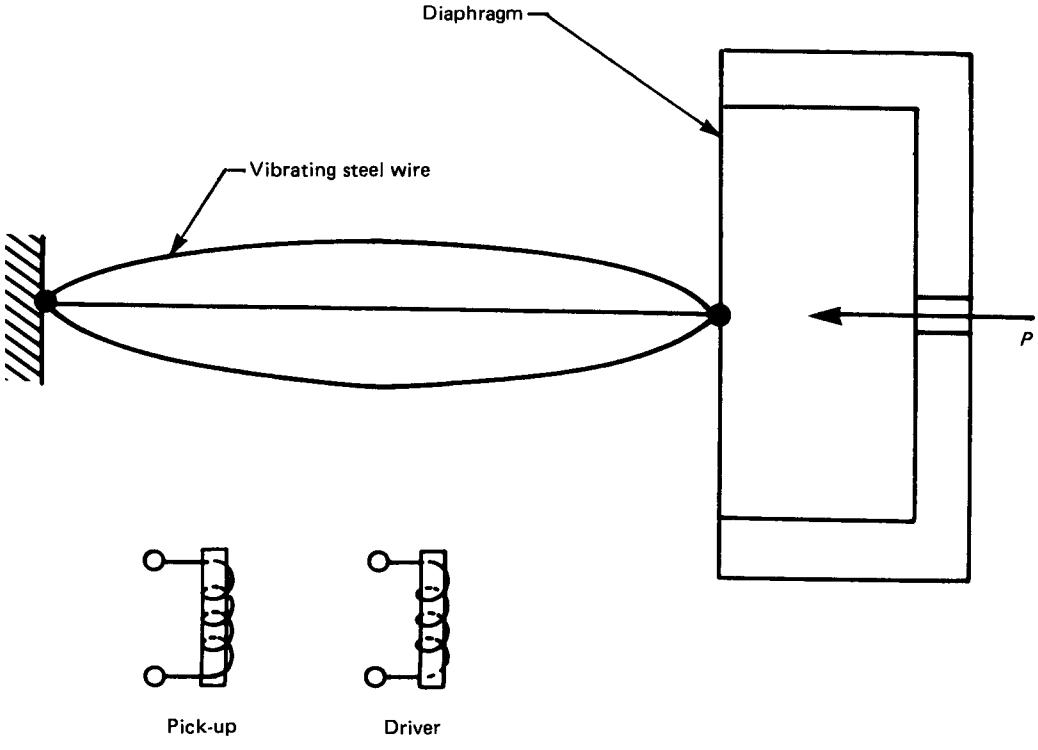

FIG. 3.29 PRESSURE TRANSDUCER WITH VIBRATING ELEMENT

Copyright ASME International
Provided by IHS under license with ASME
No reproduction or networking permitted without license from IHS
Not for Resale

excited in its fundamental resonance frequency with the aid of a magnetic driver and a pick-up coil. When pressure is applied to the membrane, the tension on the wire is reduced and the resonance frequency is decreased. The resonance frequency is a function of pressure. By making the membrane very stiff, hysteresis can be reduced below levels normally encountered in strain gage pressure transducers.

Among the vibrating elements used in commercially available transducers are wires, diaphragms, cylinders, rim-loaded piezoelectric elements, beam-loaded piezoelectric elements, and ultrasonic resonators. All of these transducers produce a sinewave or pulse sequence whose frequency (or period) is related to pressure. The transducers are all sensitive to temperature; careful temperature compensation, measurement, or control are needed. The relationship between pressure p and period τ is often given by polynomials of the type

$$p = \sum_{i=0}^{n} a_n \left(\frac{\tau - \tau_o}{\tau_o} \right)^n$$

where

τ = period of oscillation at pressure p

τ_o = period of oscillation at reference pressure

or, if temperature is measured separately,

$$p = \sum_{i=0}^{n} \left[a_n \left(\frac{\tau - \tau_o}{\tau_o} \right)^n + \varrho_n T \right]^n$$

Polynomials sometimes require more than a dozen terms to characterize a transducer fully. Pressure-period or pressure-frequency relations for vibrating-element transducers are rarely linear within the precision of the transducing element. Some transducers are, therefore, available with digital linearizers which multiply the output signal with suitable polynomials. If these polynomials do not contain a sufficient number of terms, the precision of the transducing element is degraded. Linearizers convert the transducer output to a frequency f related to pressure by

$$p = af$$

or

$$p = a(f - f_1)$$

with

$$p_{max} = a(f_{max} - f_1) = af_2$$

where f_1 and f_2 are the limits of a suitable band for telemetry. Great convenience for the user results from coupling vibrating-element transducers with hand-held calculators. The calculator can be programmed with the calibration equation relating pressure and frequency (or period) to calculate pressure in any one of a variety of pressure units.

The best presently available vibrating-element pressure transducers have an uncertainity on the order of 0.05%. This value was estimated from the standard deviation of the residuals of a least-squares fit of a polynomial in pressure and temperature to data taken in the standard NBS transducer characterization test.

(g) Piezoelectric Transducer. Pressure transducers of this type can measure quasi-static and dynamic pressures from a few millipascals up to values greater than 7.5×10^5 kPa (10^5 psi). Frequencies in excess of 500 kHz may be measured with high-stiffness quartz elements. Therefore, very short pressure transients or very steep pressure rises (rise time of a few microseconds) can be recorded. Piezoelectric transducers can be used over a wide temperature range from cryogenic to over 400°C (752°F).

A piezoelectric transducer utilizes a piezoelectric crystal that has the ability to generate a charge when a force is applied to it. Figure 3.30 diagrammatically shows the basic construction of a piezoelectric pressure transducer.

In a constructed transducer, the pressure being measured exerts a force, usually through a diaphragm upon the piezoelectric crystal element (usually quartz because of its stable characteristics), and causes the crystal to be mechanically loaded and strained. When the crystal is strained by an external force, a displaced electrical charge accumulates on opposing major surfaces, forming a voltage signal according to the laws of electrostatics. The diaphragm can be hermetically sealed to the transducer body to protect the crystal element.

A limitation of this transducer is that it responds only to changes in pressure. A voltage generated by an applied steady pressure decays or leaks off, unless the crystal is connected to an amplifier of infinite impedance.

A piezoelectric transducer output signal usually requires amplification before connecting to a readout device. This can be achieved with either a charge or voltage amplifier. On voltage-amplifier systems, the amplifier can be external or built into the transducer housing using integrated circuitry. Some ceramic transducers have exceptionally high values of internal capacitance and can be used directly into high-impedance readout devices such as oscilloscopes.

Copyright ASME International
Provided by IHS under license with ASME
No reproduction or networking permitted without license from IHS
Not for Resale

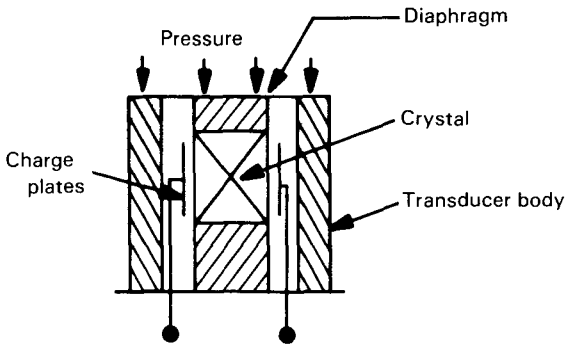

FIG. 3.30 PIEZOELECTRIC PRESSURE TRANSDUCER

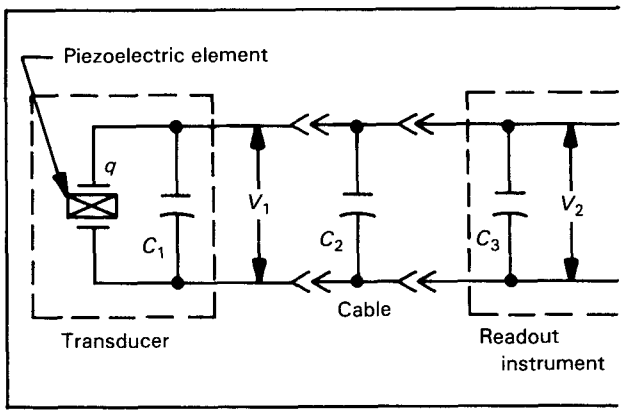

FIG. 3.31 CONVENTIONAL PIEZOELECTRIC SYSTEM

Others which have low internal capacitance require voltage amplifiers. Each system will be discussed separately.

(1) Voltage Systems. Figure 3.31 shows schematically a conventional piezoelectric system including transducer, cable, and readout or amplifier. The open-circuit voltage sensitivity V_1 is (measured with cable disconnected)

$$V_1 = \frac{q}{C_1}$$

where

q = basic charge sensitivity (pcb/psi)
C_1 = transducer internal capacitance

The overall system voltage sensitivity measured at the readout instrument is the reduced value:

$$V_2 = \frac{q}{C_1 + C_2 + C_3}$$

where

C_2 = cable capacitance
C_3 = input capacitance of readout instrument or amplifier

The dependency of system voltage sensitivity upon total shunt capacitance across the crystal, as defined by the above two equations, severely restricts input cable length. This explains why the voltage sensitivity of high-impedance type of piezoelectric transducers is measured and specified with a given cable capacitance. If the cable length and/or type is changed, the system must be recalibrated. The very high impedance level of the crystal makes the use of low-noise coaxial cable mandatory and precludes the use of such systems in moist or dirty environments unless extensive measures are taken to seal cables and connectors. Additionally, frequency response is affected by cable capacitance.

(2) Charge Systems. The problem of capacitive attenuation is solved by the use of the charge amplifier since the output voltage is dependent only upon the ratio of input charge to feedback capacitor. Refer to Fig. 3.32.

However, there are limitations on the use of charge amplifier systems, especially in field environments or when driving long cables from transducer to amplifier. The electrical noise at the output of a charge amplifier is directly related to the ratio of total input capacitance ($C_1 + C_2 + C_3$), to feedback capacitance C_f. Because of this, cable length is limited as in the voltage system.

(3) The ICP (Impedance Converter Piezoelectric) Concept. The ICP concept involves the combining of a miniature IC voltage amplifier (impedance converter) into the same package with the piezoelectric element. Figure 3.33 shows a fundamental ICP transducer schematically.

An input pressure acting upon the piezoelectric element produces a quantity of charge ΔQ. This charge collects in shunt capacitance C forming voltage V equal to $\Delta Q/C$.

The basic ICP amplifier shown in Fig. 3.33 is a non-inverting DC amplifier, with a frequency response beyond 1 MHz at a signal level of ± 5 volts. However, the frequency response of specific transducers is limited. This type of transducer is particularly applicable to a measurement requiring long cables between transducer and readout.

Copyright ASME International
Provided by IHS under license with ASME
No reproduction or networking permitted without license from IHS
Not for Resale

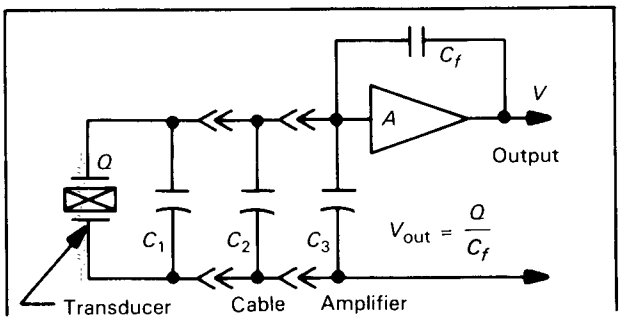

FIG. 3.32 CHARGE SYSTEM

Each system has advantages and disadvantages, depending on the application. Manufacturers' literature should be consulted for application specifics. Piezoelectric pressure transducers have uses in a multitude of applications such as: pressure measurements in hydraulic and pneumatic systems, pressure measurements in internal combustion engines, and ballistic pressure measurements in shock tubes.

(h) Pressure Switches. Combining any of the previously discussed sensing elements with an electromechanical switch forms a pressure switch. Usually used where a limit or alarm indication is required, pressure switches may also be employed when simple "on-off" control is required. Generally speaking, they are available to sense gage, absolute, or differential pressures with magnitude between 1 kPa (5 in. H_2O) and 700,000 kPa (100,000 psi).

Broadly speaking, they may be classified with displacement-type devices, with the sensing element constrained by the usual considerations for elements in this class of service. These sensing elements may supply the return spring force or may be used only as pressure-summing members, with the restoring forces supplied by external springs. It is important that the force consumed in actuating the electromechanical switch be a very small fraction of the total spring rate of the system. This point is quite important because pressure switches employ a snap-acting switch for positive operation and therefore subject the pressure element to a sudden reduction in opposing force. If the switch mechanism represents a very large fraction of the spring rate, intolerably large hysteretic errors or apparent deadband will exist. That is, actuation values on rising and falling pressures will be different by unacceptably large amounts. However, even with the switch contributing small amounts of force to the system spring rate, the need for snap-action requires some small differential between the actuation values on rising and falling pressures. This means that a pressure switch, unlike an analog transmitter, cannot operate close to 0% of its operating range. If a pressure switch with a 3 kPa differential were used at a setpoint of 2 kPa, it would require a -1 kPa pressure to actuate. If the process pressure does not attain this value, the switch would always be activated and therefore be useless for control or alarm.

This fact, combined with nonlinear behavior near zero input, suggests that pressure switches not be used below about 10% of their rated working range. At higher pressures, elements can be subjected to stresses which lead to element fatigue and premature failure; manufacturers generally discourage operation above 70% – 75% of rated pressure. A trade-off then exists between accuracy and operating life (see Fig. 3.34) which lies between 30% and 70% of working range.

If a switch is operated between these limits and the electrical load is not severe, then some generalizations can be made about service life (number of switch operations). If a service life of one million pressure cycles or switch operations or less is expected, a diaphragm, bellows, or Bourdon tube element is satisfactory. If greater service life is expected, a piston switch should be used. However, where pressure variations are small (20% or less of the adjustable range of the switch), a Bourdon tube, bellows, or diaphragm switch can be expected to provide a useful life of up to two to five million cycles before metal fatigue failure of the sensing element or switch mechanism occurs.

These rule-of-thumb estimates can be drastically reduced if the speed of cycling is high. If a cycle is less than once every few seconds, a piston switch should be considered. When rapid cycling occurs with Bourdon tube, bellows, or diaphragm elements, fatigue will occur in much shorter times than would normally be expected.

For elements used above 7000 kPa (1000 psi), the materials from which they are constructed are generally working closer to the ultimate strength of the material. This will cause a serious degradation of operating life and suggests that these elements should be used at perhaps only 30% – 35% of their rated working pressure to achieve greater life. These estimates assume the sensing element to be the limiting factor in pressure switch life. However, if the switch is inadequately rated for the electrical circuit, failure can occur prematurely in the electromechanical switch. Also, wear in this mechanism may cause a drift of setpoint. Should such a drift be unacceptable, estimates of useful life must be revised downward.

Copyright ASME International
Provided by IHS under license with ASME
No reproduction or networking permitted without license from IHS
Not for Resale

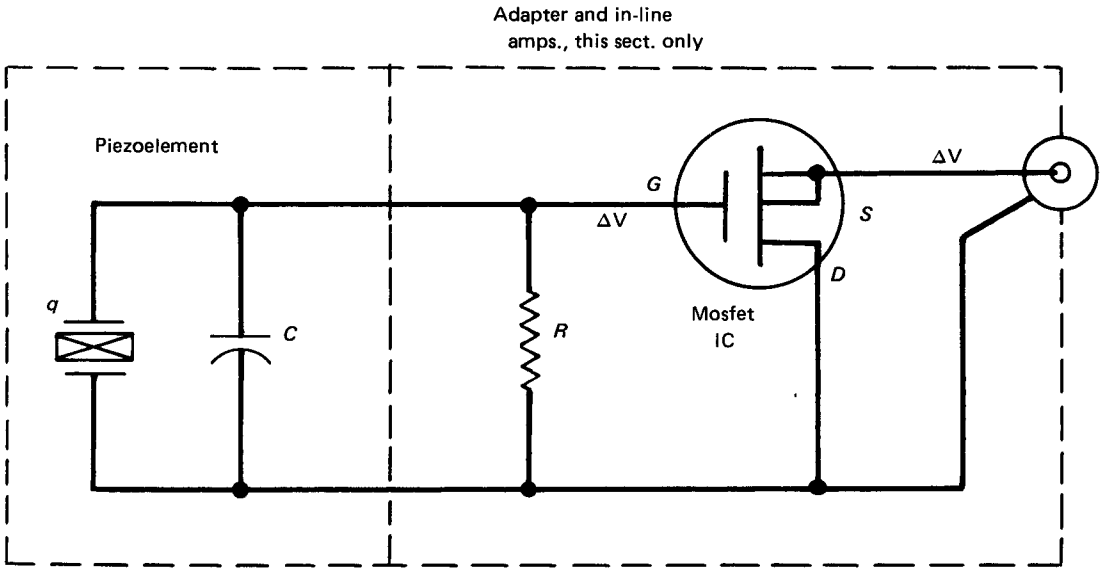

FIG. 3.33 BASIC ICP TRANSDUCER

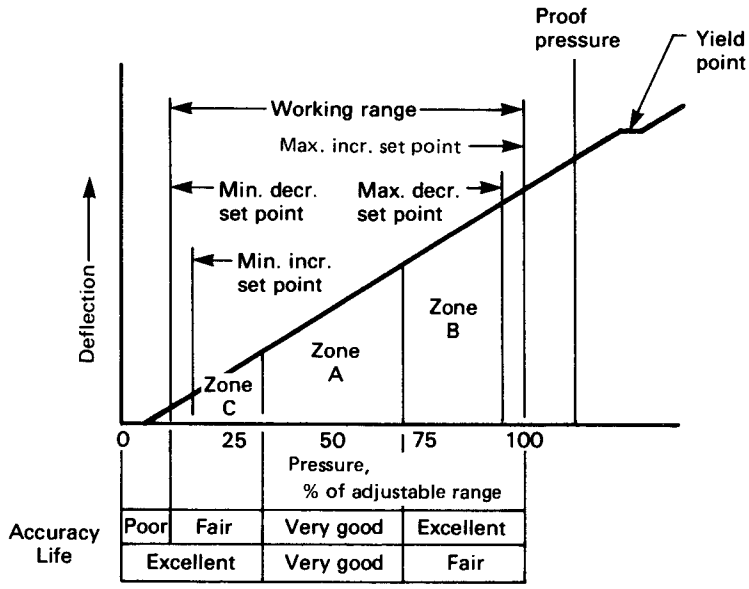

NOTES:
(1) For accuracy and life, select Zone A.
(2) For life, select Zone C.

FIG. 3.34 OPERATING RANGES FOR PRESSURE SWITCHES
(Courtesy of IMO Delaval, Barksdale Controls Division)

Copyright ASME International
Provided by IHS under license with ASME
No reproduction or networking permitted without license from IHS
Not for Resale

It is difficult to predict a derating factor; user experience and/or manufacturer's data should be examined for these factors.

3.5 LOW ABSOLUTE PRESSURE (VACUUM) SENSORS

3.5.1 Units and Terminology. Historically, two meanings of the term *vacuum* have evolved. Both meanings refer to absolute pressures below normal atmospheric pressure, but differ in their reference points. For example, when an auto mechanic describes a "20-inch vacuum," he is discussing a negative *gage* pressure equivalent to 20 in. Hg. A vacuum technologist speaks of a "hard" vacuum of 10^{-13} Torr. Here, the technologist means an extremely low *absolute* pressure. To add to the confusion, note that different units are used. Each area of usage has its own set of "customary" terms to quantify vacuum measurements. Table 3.3 lists the more common units, conversion factors, and area of usage. Note particularly the term Torr (= 1 mm Hg). This unit is in very common use, but such use is being discouraged. Ultimately the pascal should displace all other units and its use is being encouraged.

3.5.2 Technology. The choice of measuring devices becomes progressively more restricted as the absolute pressure level decreases. Indicating gages may measure down to about 10 kPa (3 in. Hg) absolute. By careful and innovative design, other direct-measuring devices may be able to measure down to 0.1 Pa (0.75 micron). To measure pressures lower than this limit, inferential measurements are available which can be related to pressure for a known gas or mixture of gases.

Devices used to measure vacuum referenced to atmosphere (sometimes called "suction vacuum") are similar to those discussed earlier in this Section and will not be discussed here. Instead, only devices intended for low absolute pressures will be covered.

3.5.3 Direct Measuring Devices. The gages which measure pressure directly include mercury micromanometer, butyl-phthalate manometer, diaphragm comparator, and McLeod gage.

3.5.3.1 Mercury Micromanometer. If a mercury manometer is refined for the best possible precision, it is possible to read levels accurately to about 1 Pa (0.01 mm Hg). This requires tubes of at least 16 mm (0.63 in.) to minimize capillary effects, precision-scale engraving, vernier reading, sighting edges arranged to eliminate parallax, and adequate illumination. Such an instrument could therefore be used to determine pressure difference of 130 Pa (1 mm Hg) to 1% precision, and 1.3 kPa (10 mm Hg) to 0.1% precision. Instruments of this grade are available commercially as well-type manometers or barometers with a span of 100 kPa (30 in. Hg) or on special order up to 340 kPa (100 in. Hg) span. This is, of course, not a convenient test instrument but is useful for calibration purposes. If the reference leg of the manometer is carefully filled, the reference pressure will be the vapor pressure of mercury of about 0.5 Pa (0.004 mm Hg) at atmospheric temperature, which is less than the reading limit of the gage.

3.5.3.2 Butyl-Phthalate Manometer. Water is not useful as a manometric liquid for low absolute pressure because of its high vapor pressure. However, butyl phthalate, as used in the Hickman vacuum gage shown in Fig. 3.35, is a liquid with vapor pressure much less than that of mercury and density of the same order as water. With a manometer arrangement of similar precision, butyl phthalate can measure absolute pressures about one order of magnitude lower than mercury.

It has the disadvantages that its temperature coefficient of expansion is high and many gases and liquids are highly soluble in it, so that the low-pressure reference side of the manometer must be continuously pumped. This also means that the liquid is easily contaminated, with a consequent change in density.

3.5.3.3 Diaphragm Comparator. A special modification of the diaphragm pressure gage is commercially available for the measurement of very low pressure differentials, with a sensitivity of about 0.1 Pa (1 micron) (see Fig. 3.36). The reference pressure, usually a high vacuum, is applied to one side of a diaphragm and the unknown higher pressure to the other side. The diaphragm forms one plate of an electrical capacitor. An adjustable direct-current voltage is applied to bring the diaphragm back to its original position by electrostatic attraction. The balance point is indicated by a capacitance bridge circuit. The value of the balancing DC voltage is read from a potentiometer, and is the measure of pressure difference. The span of the instrument is 20 Pa (150 microns). The reference base may be a high vacuum or atmospheric pressure. The instrument is a true pressure gage, but it is affected by the dielectric constant of the gas and, of course, by temperature. These effects become more important at higher pressure levels.

3.5.3.4 McLeod Gage. This gage comprises means for compressing a volume of the rarefied gas into a

Copyright ASME International
Provided by IHS under license with ASME
No reproduction or networking permitted without license from IHS
Not for Resale

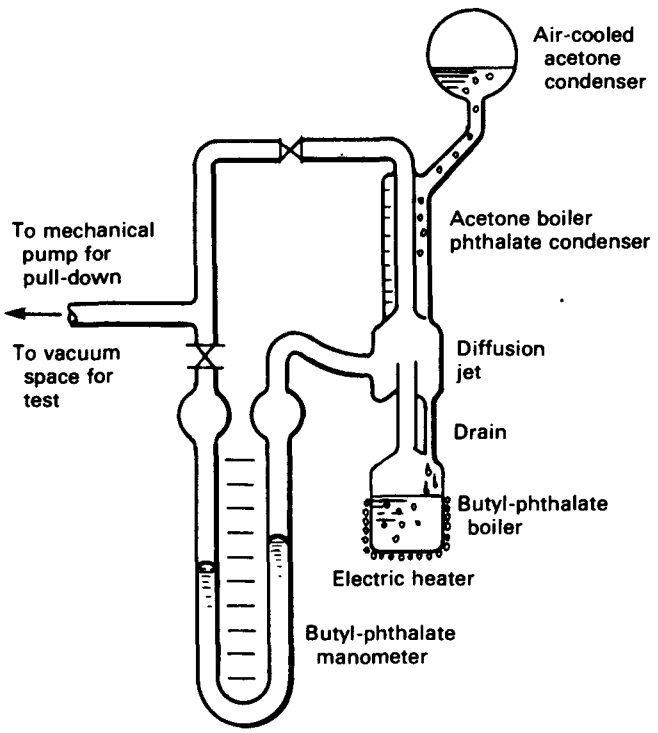

FIG. 3.35 HICKMAN VACUUM GAGE

Copyright ASME International
Provided by IHS under license with ASME
No reproduction or networking permitted without license from IHS
Not for Resale

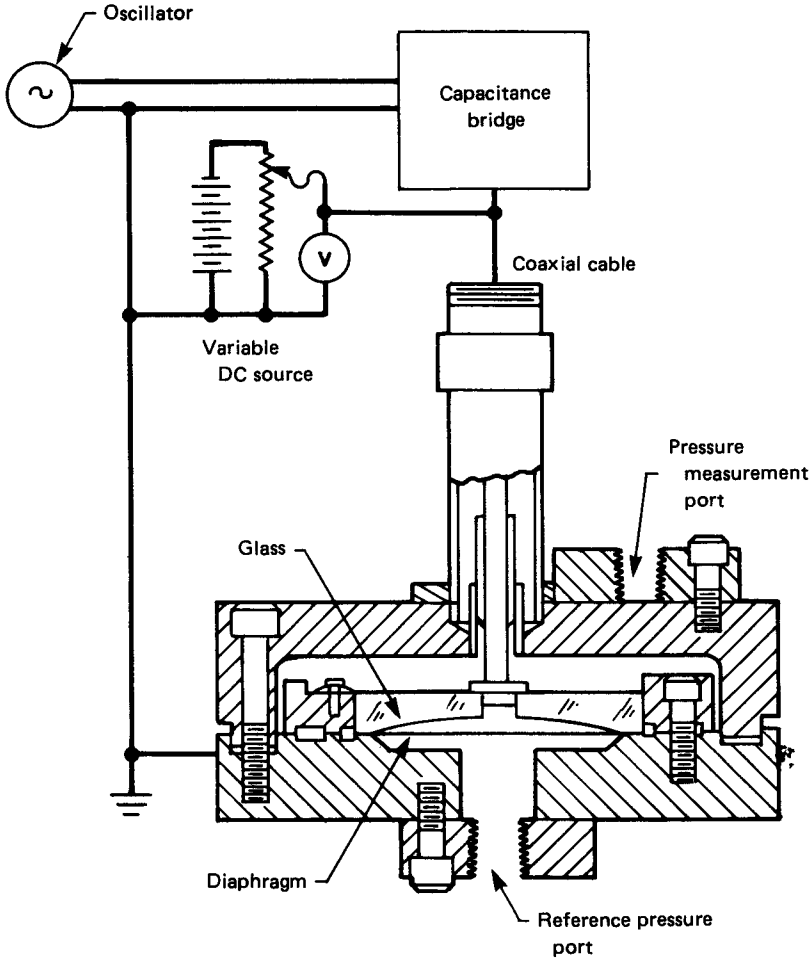

FIG. 3.36 DIAPHRAGM PRESSURE COMPARATOR

Copyright ASME International
Provided by IHS under license with ASME
No reproduction or networking permitted without license from IHS
Not for Resale

TABLE 3.3
VACUUM MEASUREMENT UNITS

Units	Where Used [Note (1)]	Conversion Factors [Note (2)]					
		psi	kPa	in. H_2O	in. Hg	mm Hg	Bar
in. H_2O (4°C) (39.2°F)	GP	0.0361	0.249	1	0.0736	1.87	0.00249
in. Hg (0°C) (32°F)	GP/LA	0.491	3.39	13.6	1	25.4	0.00339
psi	GP/LA	1	6.89	27.7	2.04	51.7	0.0689
mm (of Hg) (0°C) (32°F)	LA	0.0193	0.133	0.535	0.0394	1	0.00133
micron of Hg (μ)	LA	1.93×10^{-5}	1.33×10^{-5}	5.35×10^{-5}	3.94×10^{-5}	10^{-3}	1.33×10^{-6}
Torr (sec mm of Hg)	LA	0.0193	0.133	0.535	0.0394	1	0.00133
Pascal	LA	1.45×10^{-4}	10^{-3}	4.01×10^{-3}	2.95×10^{-4}	7.50×10^{-3}	10^{-5}
Millibar	LA	0.0145	0.100	0.401	0.0295	0.750	10^{-3}
Bar	GP/LA	14.5	100	40.1	29.5	750	1

NOTES:
(1) GP = measurement referenced to atmospheric pressure; LA = low absolute.
(2) Rounded to three places.

much smaller volume. From the dimensions of the apparatus, and a reading of a substantial mercury-level difference, the pressure of the original sample in terms of a height of a mercury column is calculated. The arrangement is shown in Fig. 3.37. The compression is essentially isothermal because of the time involved and the large surface-to-volume ratio. The measurement starts with mercury drained out of the instrument and the gage filled with the gas to be measured. The mercury is raised by any of a number of possible methods cutting off the volume V_1 in the measuring bulb. As the mercury continues to rise, this gas is compressed into the measuring capillary extension, until the level in the exactly similar reference capillary reaches a zero point corresponding to zero volume in the measuring capillary. The mercury level in the measuring capillary will be lower because of the trapped gas. The level reference h is related to the original pressure P_1 (both in linear units) in the following way:

$$P_1V_1 = P_2V_2 \text{ for isothermal compression}$$

$$V_2 = hA$$

$$P_2 = P_1 + h$$

$$P_1 = \frac{Ah^2}{V_1 - hA}$$

which reduces to, approximately

$$P_1 = \frac{Ah^2}{V_1}$$

since $hA << V_1$.

Alternatively, the gage may be arranged to compress the gas only to a fixed volume V_2 identified by a reference zero mark at the base of the measuring capillary. Then the mercury will stand higher in the reference capillary by the height h. The original pressure is then:

$$P_1 = P_2\left(\frac{V_2}{V_1}\right)$$

$$P_2 = P_1 + h$$

$$P_1 = h\left(\frac{V_2}{V_1 - V_2}\right)$$

Copyright ASME International
Provided by IHS under license with ASME
No reproduction or networking permitted without license from IHS
Not for Resale

Since $[V_2/(V_1 - V_2)]$ is a constant of the instrument, P_1 is a direct linear function of h.

Combining these two methods provides a double range in one instrument for high and low pressures.

If condensible components are present in the original sample, they will be partially condensed by the compression and will not contribute to the final gas volume. The McLeod gage measures essentially only the fixed gases in the original sample (see para. 2.1.3).

The range of the usual commercial forms of McLeod gage covers from 0.001 Pa to 7 kPa (0.01 to 50,000 microns), not, of course, in the same gage. At the lower end of this range, it is necessary to provide a cold trap between the gage and the system to prevent contamination of the system by the mercury vapor from the gage.

3.5.4 Inferential Measuring Devices. When the pressure to be measured falls below that covered by the previous devices, it is necessary to use detectors that respond to a pressure-related property. Two such properties are thermal conductivity and ionization.

Thermal-conductivity devices rely upon the fact that, for several decades of pressure in the region of interest, the heat loss from a thin wire is nearly linear with pressure. Thermocouple and Pirani gages are two devices using this phenomenon.

The principal advantages of the thermocouple and Pirani vacuum gages are their simplicity and low cost. Improvements in their performance are being constantly made. Their principal disadvantages are the shift in calibration caused by contaminating vapors from the vacuum system and slow response. The shift in calibration is more severe near the low-pressure end of the scale. This is caused primarily by the change in emissivities of the heating element, thermocouple junctions, and surrounding walls of the container. Response of the thermal-conductivity gages is relatively slow, because of thermal inertia. These gages must be calibrated for the gas mixture to be encountered.

3.5.4.1 Thermocouple Gage. In the usual form of construction of a thermocouple gage, a short length of resistance wire is heated to perhaps 200°C. At the midpoint of this heater wire, a thermocouple is spot-welded. A sensitive microammeter (of the order of 200 microamperes) and low internal resistance (of the order of 50 ohms) is used to measure the current produced by the voltage at the thermocouple. The assembly of the thermocouple and heater element is usually mounted in a metal or glass envelope, as shown in Fig. 3.38. A short connection of tubing is provided for connection to the vacuum system.

For a given gage, the reading of the microammeter is constant for a constant heater input and constant pressure. The reading depends upon the gas composition. At pressures higher than 30 Pa (225 microns), the microammeter reading is very low and may correspond to about 10% of full-scale value. The reason for this effect is that the thermal conductivity through the gas is high and essentially independent of pressure above 130 Pa (1 mm Hg). However, as the pressure is reduced below 130 Pa, the gas conductivity begins to decrease with pressure down to about 1.3 Pa (10 microns). Since the thermal conductance of the gas decreases for decreasing pressures, the temperature of the heating element (and thus the thermocouple junction as well) increases.

This increase in temperature of the thermocouple junction with decreasing pressure results in an increase in the voltage output of the thermocouple. Thus, the deflection of the microammeter is greatest for the lower pressures. In some thermocouple gages, the microammeter reading is about 80% of the full scale at 1.3 Pa (10 microns).

As pressure is reduced below 1.3 Pa, the temperature change at the thermocouple junction is comparatively small. Thus the microammeter reading approaches an asymptote for decreasing pressures. This asymptote is due to two major factors: thermal radiation and thermal conduction through the supporting leads of the heater and thermocouple elements. At pressures below 1.3 Pa, the thermal radiation and heat conduction through the leads are essentially constant and are considerably greater in magnitude than the effect of thermal conduction through the gas. For these reasons, pressure measurements less than 1 Pa (7.7 microns) are not attempted with the thermocouple gage.

3.5.4.2 Pirani Gage. The Pirani gage is similar in operation to the thermocouple gage. The same factors that limit the performance of the thermocouple gage at pressures above 130 Pa (1 mm Hg) and at pressures below 1 Pa (10^{-2} mm Hg) also limit the measurable pressure range of the Pirani gage. In the Pirani gage, however, only a heating element is used and the change in resistance of this element is measured as a function of pressure. The usual detecting-circuit arrangement for a Pirani gage is to use the heating element in one arm of an electrical bridge network (see Fig. 3.39). To compensate for ambient effects, including supply-voltage variations, another Pirani element is enclosed in a sealed and evacuated chamber and used as the balancing element in the bridge circuit. The power is supplied to two opposite corners of the bridge

Copyright ASME International
Provided by IHS under license with ASME
No reproduction or networking permitted without license from IHS
Not for Resale

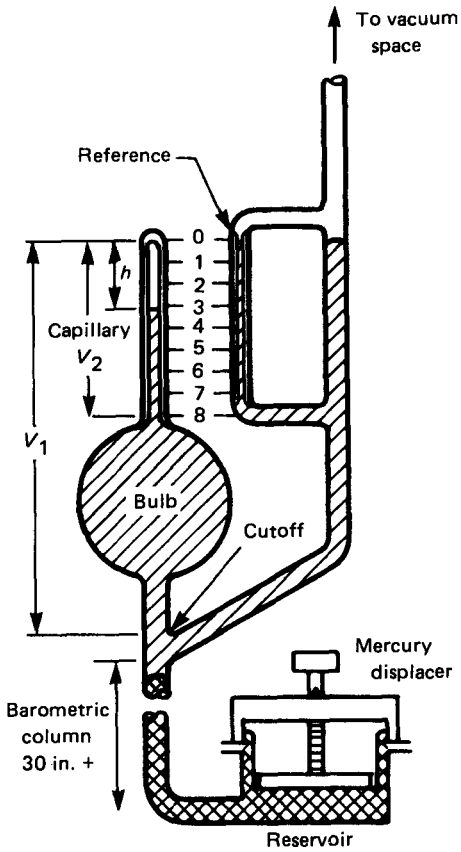

FIG. 3.37 McLEOD GAGE

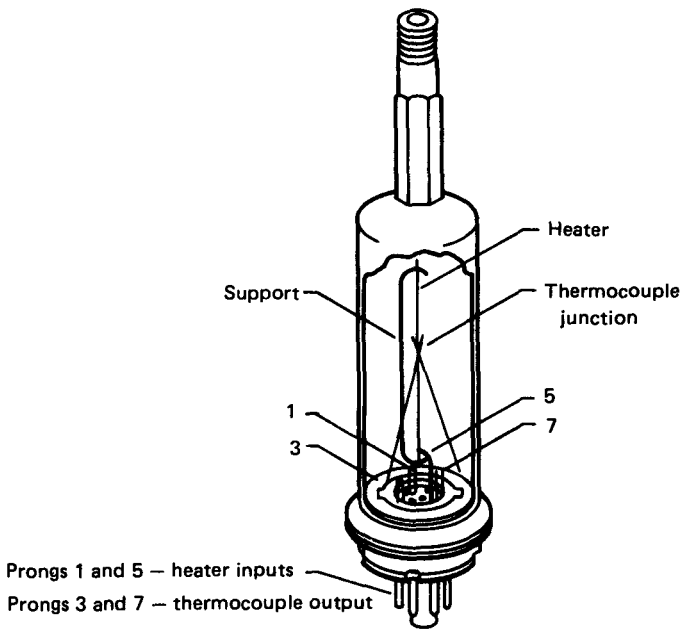

FIG. 3.38 THERMOCOUPLE GAGE

Copyright ASME International
Provided by IHS under license with ASME
No reproduction or networking permitted without license from IHS
Not for Resale

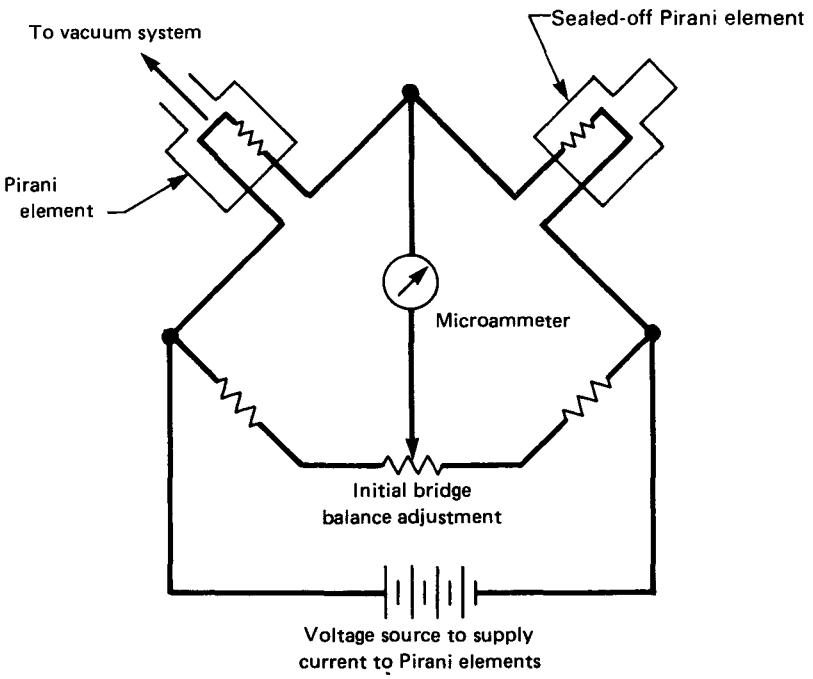

FIG. 3.39 PIRANI VACUUM GAGE

Copyright ASME International
Provided by IHS under license with ASME
No reproduction or networking permitted without license from IHS
Not for Resale

and an indicator, typically a DC microammeter, is connected to the remaining corners. Initial bridge zero balance is obtained at an absolute pressure no greater than 0.01 Pa (10^{-4} mm Hg). As the pressure increases from about 1 Pa to about 100 Pa, resistance of the sensing Pirani element decreases. This unbalances the bridge and causes indication on the microammeter corresponding to pressure.

3.5.4.3 Ionization Gages. Ionization gages measure the frequency of collection and discharge of ions at an electrode. They include a means for producing ions and a means for collecting them. Associated instrumentation is then used to measure the ion current. This current is, for constant conditions, proportional to gas density, which is in turn related by the ideal gas law to gas pressure. Several types of gages exist. Their function is similar; only the details of operation differ.

(a) Bayard-Alpert Gage. The hot-filament or Bayard-Alpert type generates ions by collision of energetic electrons with the gas molecules. Thermionic emission, as employed in an electron vacuum tube, is used. Bias of the individual elements within the gage determine proper operation. Refer to Fig. 3.40. The filament is heated by voltage supplied through R_1. R_1 is adjusted until current I_1 through the grid circuit is equal to a value dependent upon physical dimensions of the gage. The voltage between the grid and filament acts to accelerate the electrons toward the grid. Collisions with gas molecules in this area produce positively charged ions. They are, in turn, attracted to the collector. M_2 measures the ion current I_2 and is calibrated in pressure units. If the voltage between filament and collector is not set high enough, electrons which escape the grid would impinge upon the collector, subtracting from the ion current in an unknown manner.

Due to exposure to dirty atmospheres or other factors, it is possible during operation or storage for the gage to become contaminated, and therefore require cleaning. To ensure proper operation, the other voltages are turned off and S_1 is closed. An electric current is passed through the grid heating the entire gage, causing accelerated outgassing of the gage, thereby in effect cleaning it.

During normal operation, the gage is heated by the filament and some material is also evaporated from the filament. This combination of outgassing and pumping (gettering) at elevated temperatures can cause the indicated pressure to be in error if the gage is not coupled closely to the gas volume whose pressure is of interest. The reading obtained will be valid for the pressure inside the gage, but will be inaccurate for the vacuum system if this caution is not observed.

A pressure and atmosphere limitation exists for the hot filament gage. Too high pressure or an atmosphere excessively rich in O_2, H_2O, or CO_2 or other gases which can react with the hot filament will destroy the filament. Generally these conditions are avoided for pressures below 0.1 to 0.01 Pa (10^{-3} to 10^{-4} mm Hg). Frequently, emission or collector current is automatically monitored for evidence of excessive pressure and provision is made to automatically shut off the filament when excess pressure exists.

As indicated before, the upper pressure range for the hot-filament gage is generally 0.1 Pa (10^{-3} mm Hg). The lower limit is influenced by design of the gage, but generally corresponds to about 10^{-5} to 10^{-6} Pa (10^{-7} to 10^{-8} mm Hg). One order-of-magnitude decrease below this level is possible through careful design and selection of materials.

(b) Phillips-Penning Gage. This is a type of commercially available ionization gage. Ionization of the gas in this gage is caused by the electrons and ions created in a glow discharge. In order to achieve even greater efficiency of ionization of the gas molecules, the electrons created in the glow discharge are constrained to move in helical paths by the proper application of electric and magnetic fields (see Fig. 3.41). The amount of ionization produced in a given gas by this method is a function of the number of molecules per unit volume.

The ions thus formed are collected at the cathode. An electronic current flow is thereby set up in the external circuit. A microammeter is used to measure this current flow. For pressures below 0.1 Pa (1 micron), the microammeter reading is closely proportional to pressure. However, at pressures above 0.1 Pa (1 micron) and up to about 60 Pa (5 mm Hg), the relation between the microammeter reading and pressure departs widely from linearity. The present commercial Phillips-Penning type ionization gages available do not read pressures of air much above 60 Pa (0.5 mm Hg).

The Phillips-Penning type of ionization gage is not too costly or complicated and there is no danger of destruction if the gage is accidentally exposed to atmospheric pressure. Its principal disadvantages are, first, its sensitivity to pressure changes above 13 Pa (100 microns) is low, and second, the glow-discharge phenomena involved in its operation are dependent on the condition of the anode and cathode surfaces. This latter effect results in errors in calibration when contaminants cover the cathode and anode surfaces. However, for pressure readings below 13 Pa, the Phillips-Penning ionization gage performs quite satisfactorily.

(c) Alphatron Gage. There is one commercial form of ionization gage available that will measure gas pressures from 0.01 Pa (0.1 micron) up to atmospheric

Copyright ASME International
Provided by IHS under license with ASME
No reproduction or networking permitted without license from IHS
Not for Resale

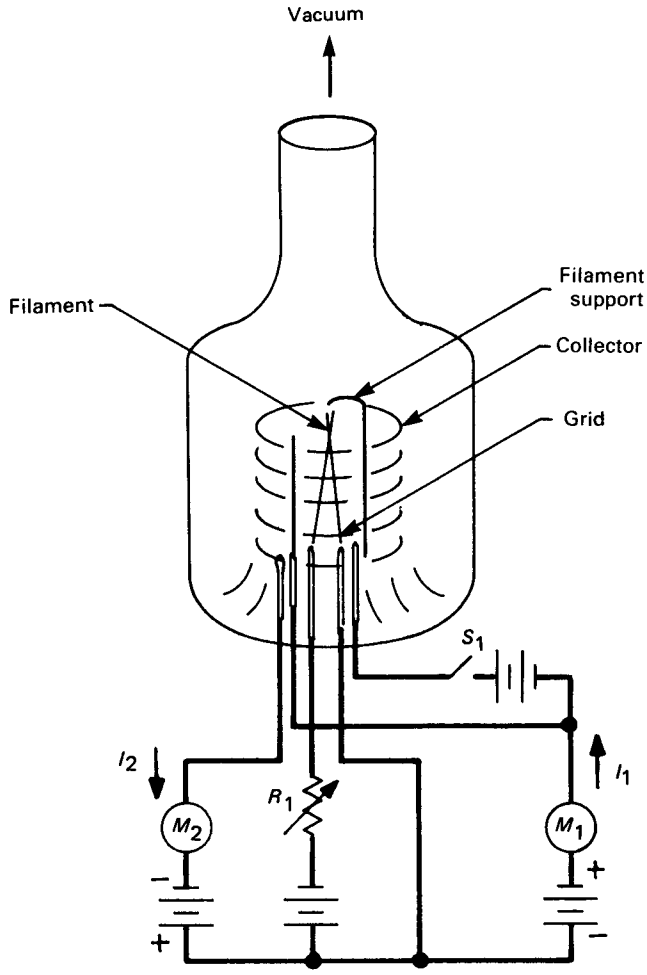

FIG. 3.40 BAYARD-ALPERT IONIZATION GAGE

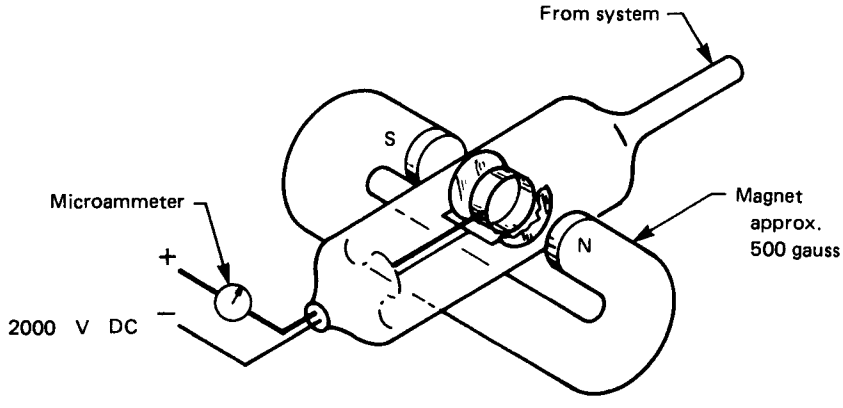

FIG. 3.41 PHILLIPS-PENNING GAGE

Copyright ASME International
Provided by IHS under license with ASME
No reproduction or networking permitted without license from IHS
Not for Resale

pressure. This is the alphatron vacuum gage which uses a small quantity of radium as an alpha source (see Fig. 3.42). The alpha particles emitted from this source ionize the gas molecules. The positive ions thus produced are accelerated by an electric field to a negatively charged collector probe. The accumulated positive charge on this probe causes an electronic current flow which is measured by an electrometer amplifier. The output of this amplifier operates a microammeter or a strip chart recorder.

Six pressure scales are available on the alphatron gage. The lowest full-scale range is 13 Pa (10 microns). The other five scales increase in factors of 10 up to the highest full-scale pressure reading of 130 kPa (1000 mm Hg). The output indications of this gage are quite linear as a function of pressure over this entire range. This gage is calibrated to read pressure correctly for dry air at normal room temperatures. As is the case with all ionization types of pressure-reading gages, corrections must be made if the gas composition is different from that of dry air, or the temperature of the gases being measured is different from that for which the gage is calibrated. For gases other than air, the scale factors are provided for making the necessary conversion. Since the alphatron is linear over most of its pressure range for gases heavier than air, and linear over the entire range for air and gases lighter than air, the application of these correction factors is simple.

Although great care has been taken to make the alphatron gage as free as possible from the effects of contamination in the vacuum system, it is important to take reasonable precautions to keep the vacuum system from depositing vapors on the radium source and the probe insulators. If a gage becomes contaminated by vapors from the vacuum system, a simple cleaning with a solvent and a few minutes drying time will restore the original calibration of the gage.

(d) Molecular Gage. Another very useful vacuum pressure gage is the molecular vacuum gage. One model of this gage is calibrated to read pressures from 0.26 Pa (2 microns) up to 26 kPa (20 mm Hg). Its operation depends on the transfer of molecular momentum transmitted from a moving surface to another surface in close proximity (see Fig. 3.43). At pressures below 130 Pa (1000 microns), the angular deflection of the dial indicator is almost linearly proportional to pressure. This is because the mean free path of a molecule at pressures below 130 Pa is larger than the distance between the two surfaces. In order to extend the range of the gage above 130 Pa up to 2.6 kPa (20 mm Hg) of air, the designers have included vanes on one of the surfaces to produce windage effects. If it were not for these vanes, the response of the gage to pressures above 130 Pa would be very small because of the very low rate of momentum transfer when the mean free path is less than the separation between the surfaces.

Since this vacuum gage depends for its operation on the transfer of momentum of the gas molecules, its deflection will be a function of the molecular weight of the gas as well as the temperature. The gage is customarily furnished to be direct-reading for dry air. For gases heavier than air, the deflection will be greater for a given pressure. The reverse is true for gases lighter than air. Correction factors are available for some of the more common gases. The gage is also available with a linear scale of arbitrary units so that the user may calibrate the gage more conveniently when it is to be used for measurement of other gases. In addition to being dependent for its calibration on the gas mass and temperature, it is also dependent on the power-line frequency. This is because a small synchronous motor is used to drive the driver surface at a constant speed. By referring to the equation in Fig. 3.43, it can readily be seen that the molecular momentum transfer between the surfaces is a function of the speed of the driver surface.

For some installations, it may not be convenient to use a gage of this type because the dial indicator has to be located in close proximity to the system under measurement.

Figure 3.43 is a sketch of the early Langmuir-Dushman molecular vacuum gage. It is limited to about 130 Pa (1000 microns) maximum pressure. However, recent improvements have extended the pressure range up to 2.6 kPa (20 mm Hg) by adding vanes on the moving surface to produce windage effects.

3.5.5 Application Considerations. Even if the precision of a vacuum gage is high, the readings obtained will be in error if certain precautions and corrections are not made. If a leak exists at the vacuum-gage connection to the vacuum system, a pressure drop could easily result in the direction of molecular flow in the vacuum system under measurement. If the molecular conductance between the vacuum gage and the point at which the pressure measurement desired is high, then it is quite likely that a correction in the reading may not be necessary. However, if the molecular conductance of the pipe, or tubing, connecting the vacuum gage to the vacuum system is very low, then serious errors could be obtained. For these reasons, it is always good practice to place the vacuum gage as close as possible to the point in the vacuum system where the pressure information is desired. In this

Copyright ASME International
Provided by IHS under license with ASME
No reproduction or networking permitted without license from IHS
Not for Resale

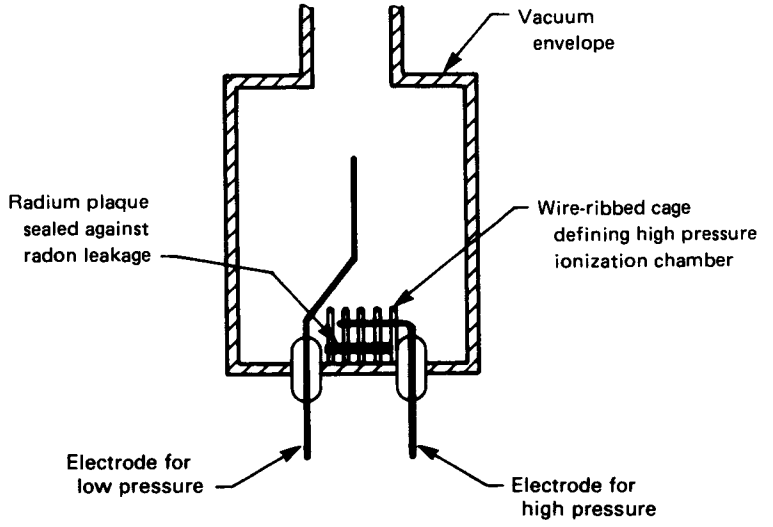

FIG. 3.42 IONIZATION CHAMBER OF ALPHATRON GAGE

regard, due consideration must be given to the possibility of contaminants such as oil vapors from back-streaming vacuum pumps. These contaminants could result in large errors in the gage readings. In many cases a simple, right-angle elbow-pipe connection from the gage to the vacuum system helps considerably in reducing gage contamination.

Another point that is often overlooked when using vacuum gages in systems occurs when there is a large difference in temperature between the vacuum gage and the point in the system where pressure information is required. As mentioned earlier, this can be a subtle source of error in the hot-filament ionization gage. In the case of high-vacuum furnaces, temperatures may be elevated by several hundred degrees centigrade. Elementary considerations of the gas laws clearly indicate the correction factors involved.

In addition to accuracy and the application of correct scale factors in the use of the vacuum gages, it is important to know something about the speed of response of the vacuum gage to sudden changes in pressure. In the case of the thermal-conductivity gages, the time constants involved are of the order of seconds. Most composition-dependent gages are considerably more rapid in responding to a pressure change, and their response is usually limited by the recording device used to measure the output signal of the vacuum gage. In many applications, however, it is usually found that the speed of response of even the slow thermal-conductivity gages is entirely adequate since the time constants of the vacuum system itself are considerably larger.

In general, the measurement problem should be carefully considered before a vacuum gage is selected for any particular application. Careful consideration must be given to the particular kind of gas variable which is being measured. In many cases, pressure is the most important quantity. In other cases, the gas density is a much more important factor than the pressure. From economic considerations it may be found that the thermal-conductivity vacuum gages have more than adequate accuracy and speed of response to satisfy the measurement requirement. Where high accuracy is required, it may be necessary to use some of the more expensive vacuum gages. However, expensive vacuum gages do not necessarily mean more accurate measurements if the gage is improperly applied and necessary correction factors are not made.

3.6 ELASTIC GAGES

Positive and negative (vacuum) pressure gages, as ordinarily used, are instruments for measuring the difference between ambient pressure (atmospheric pressure) and the pressure in a pipe or vessel. The pressure to be measured is transmitted to the interior of an elastic element (Bourdon tube, bellows, or diaphragm capsule) and the resultant motion translated into pointer motion. Pointer motion over a calibrated dial

Copyright ASME International
Provided by IHS under license with ASME
No reproduction or networking permitted without license from IHS
Not for Resale

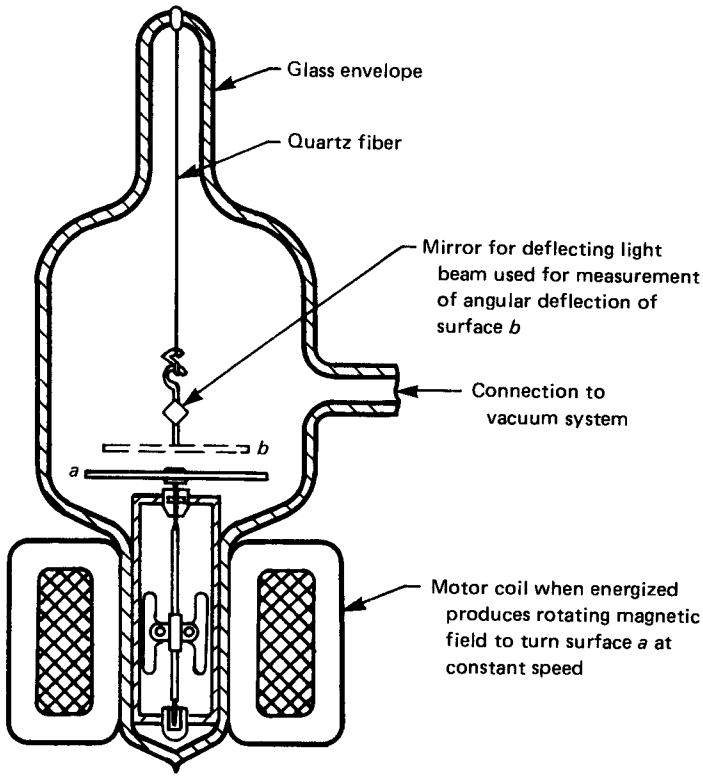

$$B = Ku\,P\sqrt{\frac{M}{T}}$$

where

B = rate of momentum transfer per unit area between the rotating surface a and the suspended surface b
K = constant for a given gas
u = angular velocity of the surface a
P = absolute pressure
M = molecular weight
T = Kelvin temperature

FIG. 3.43 LANGMUIR-DUSHMAN MOLECULAR GAGE

provides an indication of the applied pressure. Ambient pressure exterior to the elastic chamber is usually atmospheric pressure. The pressure relationships are shown in Fig. 1.1.

The output motion of the elastic element under pressure usually requires a mechanism to amplify and translate this motion into easily detectable circular rotation of a pointer. The necessity for mechanical multiplication and translation devices, plus the sensitivity of the elastic element itself, requires periodic evaluation of gage accuracy. Accuracy is determined by comparison of gage-pressure readings with transfer standards such as manometers, deadweight-loaded piston gages, pressure transducers, and appropriate test gages.

3.6.1 Classification by Sensing Element Type

3.6.1.1 Bourdon Tube Gage. The Bourdon tube gage illustrated in Fig. 3.44 involves a curved elastic tube, closed at one end. The tendency of the tube to straighten out when pressure is applied to the interior causes motion of the closed end. This motion is amplified and transmitted to the pointer. In indicating gages, the usual Bourdon tube is curved through an arc of 200 deg. to 300 deg. In other types, the Bourdon tube may be in the form of a spiral or helix having a number of complete turns, as illustrated in Fig. 3.45. Combinations of these forms may be used with or without a motion-multiplication mechanism. Bourdon tube gages are made for both positive and negative

Copyright ASME International
Provided by IHS under license with ASME
No reproduction or networking permitted without license from IHS
Not for Resale

(vacuum) pressure, compound, and differential-pressure measurement.

Differential-pressure gages may be constructed using two elastic elements with the mechanism arranged to subtract the motion of one from the motion of the other. An alternate construction may be made with a pressure-tight case so that pressure may be applied both inside and outside the elastic element. This type is limited to low pressures by the strength considerations for the enclosure, the clarity of the fluid media employed, and its compatibility with the internal mechanism.

3.6.1.2 Bellows Gage. The bellows gage, illustrated in Fig. 3.46, utilizes an elastic element formed with two or more welded diaphragms or a formed bellows. This construction is used for low pressure gages, up to about 350 kPa (50 psi).

3.6.1.3 Diaphragm Gage. A slack diaphragm gage, illustrated in Fig. 3.47, utilizes a flexible diaphragm. The motion of the diaphragm is transmitted and amplified by a suitable linkage and gears to operate a pointer. The diaphragm gage is suitable for very low pressures.

Metallic diaphragm gages utilize an elastic element made up of a series of capsules. Each capsule comprises two corrugated diaphragms joined together by various means, such as brazing, soldering, or welding. This type of gage is available in ranges of 0 – 25 mm Hg (0 – 1 in. Hg) up to 1400 kPa (200 psi) and is well adapted to the measurement of pressures lower than the practical limit of the Bourdon tube.

3.6.2 Classification by Display Format

3.6.2.1 Indicating Gage. Indicating gages (analog type) as represented in Figs. 3.44, 3.46, and 3.47 give a direct visual presentation of pressure. For constant or slowly varying pressure applications, this type of gage presentation is usually preferred. Indicating gages are provided in numerous sizes and configurations. The general construction consists of an elastic element, an operating mechanism, a dial and indicating pointer, a transparent window, and an applicable enclosure or case. The details of construction are too numerous to discuss in this document; recommended standard construction and other details may be found in American National Standards Institute documents ANSI/ASME B40.1.

Gages are available for panel mounting, surface mounting, and mounting by means of the pressure connection (stem). Enclosures or cases may have a partition separating the elastic chamber from the dial and some may have features which permit the enclosure to be filled with liquid. Filling the enclosure with liquid can reduce vibration effects and reduce pointer oscillation as well as protect the internals from external corrosive atmospheres. Gage enclosures should always provide a means of venting to reduce the possibility of internal case pressure buildup should a leak occur in the elastic element.

3.6.2.2 Recording Gage. Recording gages are usually used only for secondary and incidental pressure measurements and not for the precise measurements normally required by ASME Performance Test Codes. However, if they meet the accuracy requirements, they may be used to measure important pressures. Recording gages come in two general forms, the "round chart" and the "miniature strip chart" instruments. Both types provide a scale length of 75 – 100 mm (3 – 5 in.) and the choice normally depends on the type of record which is preferred and the amount of panel space available.

3.6.3 Commercial Gages. Commercial gages having Bourdon tube, bellows, and diaphragm elastic elements vary in construction and accuracy (error) limits, depending on intended use. Gages are normally graded by the accuracy limits of their factory calibration. Accuracy limits (permissible error) are defined in ANSI/ASME B40.1 and are expressed in terms of the pressure span over a nominal 270 deg. arc of pointer motion.

Grade 4A: ±0.10% of span for the total span
Grade 3A: ±0.25% of span for the total span
Grade 2A: ±0.50% of span for the total span
Grade 1A: ±1.0% of span for the total span
Grade A: ±1.0% of span for the middle 50% of span and 2.0% for the balance
Grade B: ±2.0% of span for the middle 50% of span and 3.0% for the balance
Grade C: ±3.0% of span for the middle 50% of span and 4.0% for the balance

Grades 3A and 4A are usually considered where accurate pressure measurements are required for evaluating critical processes and for test panels used to evaluate plant equipment. These grades are recommended for precise measurement but are generally not employed for universal and continuous industrial applications because they may incorporate pressure-sensing elements having appreciably shorter life (see para. 3.6.9.1).

Copyright ASME International
Provided by IHS under license with ASME
No reproduction or networking permitted without license from IHS
Not for Resale

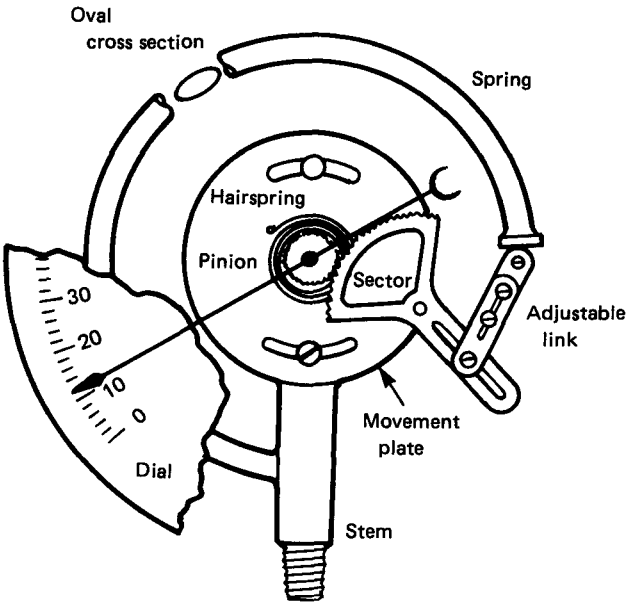

FIG. 3.44 BOURDON GAGE

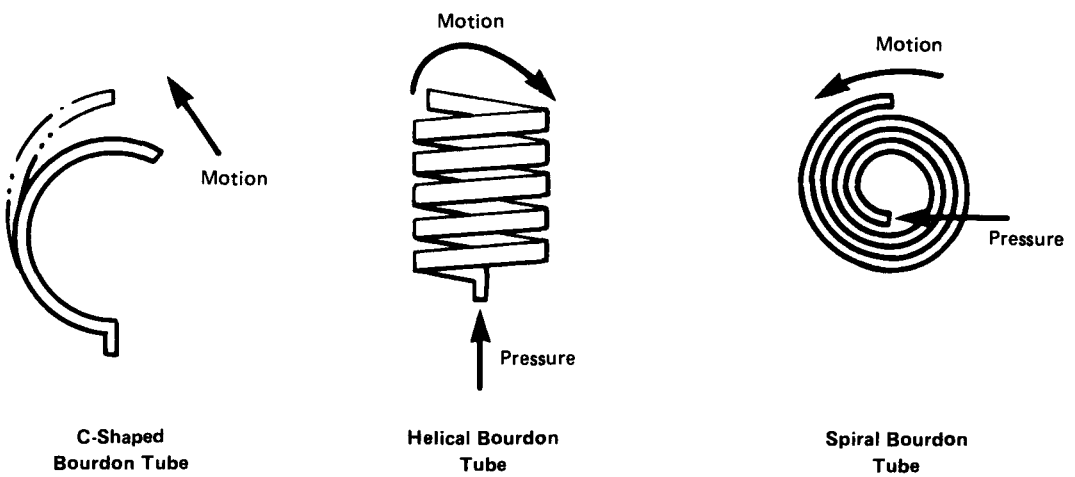

FIG. 3.45 BOURDON TUBES

Copyright ASME International
Provided by IHS under license with ASME
No reproduction or networking permitted without license from IHS
Not for Resale

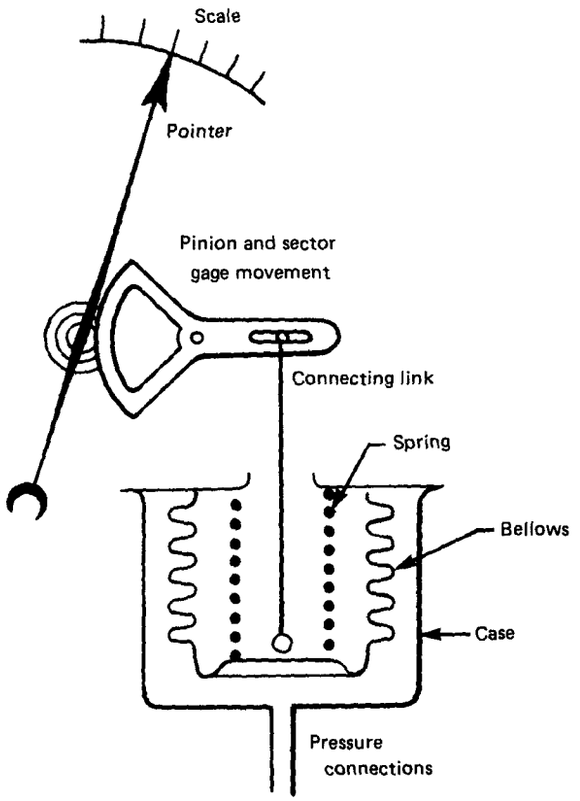

FIG. 3.46 BELLOWS GAGE

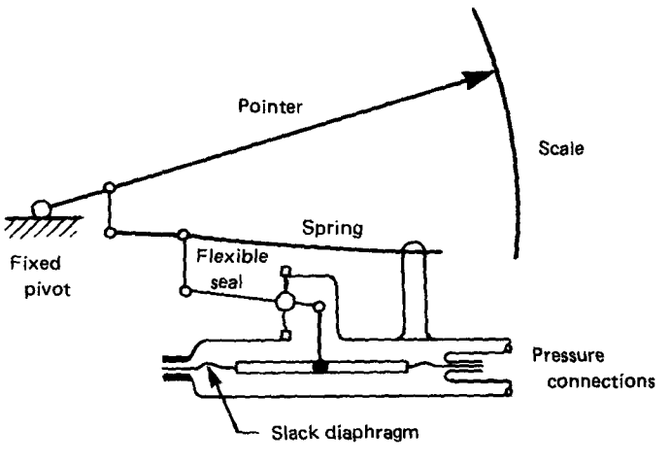

FIG. 3.47 SLACK DIAPHRAGM GAGE

Copyright ASME International
Provided by IHS under license with ASME
No reproduction or networking permitted without license from IHS Not for Resale

Since accuracy and readability are closely associated, gage size is restricted by the grade classification. Minimum gage sizes recommended for the various grades are:

Grade 4A: 8½ in. nominal size
Grade 3A: 4½ in. nominal size
Grade 2A: 2½ in. nominal size
Grade 1A: 1½ in. nominal size
Grade A: 1½ in. nominal size
Grade B: 1½ in. nominal size

To reduce parallax reading errors, Grade 3A and 4A gages are normally provided with mirror sectors on the dial and a special pointer.

3.6.4 Pressure Ranges. Pressure gages are made in a wide variety of ranges. Preferred ranges for pressure gages are:

Preferred SI Ranges (kPa)

Positive Pressure	0/1	0/10	0/100	0/1000	0/10 000	0/100 000
	0/1.6	0/16	0/160	0/1600	0/16 000	0/160 000
	0/2.5	0/25	0/250	0/2500	0/25 000	0/250 000
	0/4	0/40	0/400	0/4000	0/40 000	0/400 000
	0/6	0/60	0/600	0/6000	0/60 000	0/600 000
Negative Pressure	−100/0					
Compound Pressure	−100/150		−100/900			
	−100/300		−100/1500			
	−100/500		−100/2400			
Receiver Gage	20/100					

Preferred U.S. Customary Ranges

Positive Pressure (in. H_2O and psig)	0/10 in. H_2O	0/3 psi	0/200 psi	0/10 000 psi
	0/15 in. H_2O	0/5 psi	0/300 psi	0/15 000 psi
	0/30 in. H_2O	0/10 psi	0/600 psi	0/30 000 psi
	0/60 in. H_2O	0/15 psi	0/1000 psi	0/60 000 psi
	0/100 in. H_2O	0/30 psi	0/1500 psi	0/100 000 psi
	0/200 in. H_2O	0/60 psi	0/3000 psi	
	0/300 in. H_2O	0/100 psi	0/6000 psi	
Negative Pressure (vacuum, in. Hg)	−30/0			
Compound Pressure (in. Hg and psig)	30-0-15	30-0-100		
	30-0-30	30-0-150		
	30-0-60			
Receiver Gage (psig)	3/15			

Ranges other than these ranges may be available. Diaphragm gages are normally used for ranges less than 100 kPa (15 psi).

3.6.4.1 Range Selection. The range of a gage should be selected so that the maximum pressure at which the gage is continuously operated does not exceed 75% of the full-scale pressure. The range selected should have a full-scale pressure of approximately twice the intended operating pressure. It is desirable that all readings be between one-quarter and three-quarters of the pressure span. Test gages (Grade 3A and 4A) may be intermittently used for readings outside these limits provided the gage manufacturer recommends such usage. Special consideration must be given when gages may be installed in applications where pressure pulsation, vibration, corrosive atmosphere, or corrosive and/or oxidizing pressure media exist. Safety as applicable to indicating gages is covered in ANSI/ASME B40.1, and gage users should become familiar with this Standard.

3.6.4.2 Reading. Gages are normally furnished having dial numbers and division spacing in the form: 1×10^n, 2×10^n, and 5×10^n times the unit of pressure measurement (n is a whole number, positive, negative, or equal to zero). It is desirable that graduation spacing be equivalent to the numerical error (accuracy) rating of the gage and should not exceed two times the error (accuracy) permitted in the middle half of the scale. Thus, pressure input to the elastic element may be readily estimated when the pointer is between graduations.

Graduation and pointer-tip widths are normally furnished as narrow as practical and commensurate with the accuracy grade. The change in position of the pointer which can be detected has a minimum value of about 0.25 mm (0.01 in.) but for most pressure gages this value is nearer to 0.75 mm (0.03 in.). Discretion must be used in deciding to what degree the pressure will be recorded. The eye should be directly in line with pointer and perpendicular to the gage face to minimize parallax error. The gage should be lightly tapped with the fingers at each reading to minimize friction error.

Special caution must be exercised when readings are taken near zero. Stop pins inserted in the dial or internal minimum stops mounted on the sensing element or mechanism may prevent free pointer motion at zero pressure. This feature element, called "take up," is not recommended on Grade 3A and 4A gages but may be incorporated on other grades. The take-up feature, if incorporated, is usually equal to the numerical value of the accuracy; for example, a Grade B gage having an accuracy of ± 3.0% in the first quarter of the span, take-up may be 3.0% of the span and the stop pin or internal stop would be set to stop the pointer or mechanism at a pressure equivalent to 3.0% of the span above true zero. Additional details of this feature are outlined in ANSI/ASME B40.1.

Copyright ASME International
Provided by IHS under license with ASME
No reproduction or networking permitted without license from IHS
Not for Resale

3.6.4.3 Installation. Gages should be installed in the same position and the same orientation as when calibrated. The normal position is with the dial in a vertical plane and mid-scale at the 12 o'clock position. If gages are to be mounted in other than normal positions, it may be necessary to recalibrate the gage in the intended mounting position. When gages are installed in a system where a liquid head exists in the connecting line, it may be necessary to compensate for this static head. The compensation may be negative or positive depending on the location of the gage above or below the pressure tap in the system. Gages should be located where the temperature is as near as practical to 23°C (73°F) and where there is no continuous vibration which may cause premature mechanism failure.

Temperature variations in excess of 5°C (10°F) must be considered, particularly for the more accurate grades used as test gages. Temperature errors for normal materials encountered will range between 1.5% and 2.5% of the pressure span for 55°C (100°F) change in temperature. For certain special applications, temperature-compensated gages have been manufactured which embody materials and designs to effectively reduce temperature error over specific temperature ranges.

Vibration effects may be reduced or eliminated by mounting the gage remotely using flexible piping. Gages having internal damping, such as liquid filling the case, may also have reduced vibration effects.

Permanently installed gages may have long pipes leading to a central gage panel. It is not unusual to find that more attention has been given to appearance than to accuracy. Long pipe lines are not good practice where good accuracy is essential. Test gages in particular should be installed with piping as short as practical. It may be necessary to temporarily insert a test gage at the line pressure tap and calibrate the remote panel gage accordingly, where long piping cannot be avoided.

Transmitters, both pneumatic and electric, are frequently employed in industrial plants to economically and safely transmit the process pressure to some more convenient location. While the accuracy of transmitters is often more than adequate for industrial operations, precise measurements for tests should preferably be made with a suitable, calibrated gage at the point of measurement. Where this is not possible, the transmitter and receiver gage should be calibrated as a unit, and this unit treated the same way as the calibrated test gage. The reasons for preferring the use of a separate gage are ease of calibration and the greater reliability of a single element.

3.6.4.4 Connections. Pressure gage connections are generally 1/8-27, 1/4-18 or 1/2-14 American Standard external taper pipe threads (NPT) depending on the size and method of mounting. NPT threads are used for pressures through 160,000 kPa (20,000 psi). Above this pressure, 9/16-18 female super-pressure compression tube fittings or equal are employed. Other appropriately-sized connections, employing sealing means other than tapered pipe threads, are coming into use for specific applications where thread-sealing gage replacement or gage orientation may be critical.

3.6.5 Gage Attachments. When added to a pressure gage, special accessories improve its ability to withstand adverse conditions and broaden its usefulness by performing functions not normally required of a pressure gage alone.

3.6.5.1 Chemical Diaphragm Seals. Diaphragm seals are used to prevent the measured fluid from reaching the gage elastic element. Chemical seals may be required to:

(a) seal off a corrosive chemical that would seriously attack or perhaps destroy the gage pressure element;

(b) prevent the entry of contaminants, solid particles, or liquids that might solidify in the pressure-sensing element, thereby rendering the gage inaccurate or inoperative.

The gage manufacturer should be consulted regarding the selection of chemical seals. Proper selection of materials and the method of attachment may be critical. Also, the accuracy of a gage will be affected by adding a chemical seal.

3.6.5.2 Pulsation Dampers. Pulsation dampers are frequently utilized to reduce the magnitude of line pressure pulsations. Rapidly pulsating pressure can quickly destroy gage accuracy by producing abnormal wear on moving parts. The elastic element is a metal spring member and rapid pulsations can cause excessive reversing stresses and eventual metal-fatigue failure. In addition, pulsating pressures often make it virtually impossible to obtain pressure readings. Numerous types of pulsation dampers are available. The gage manufacturer can provide valuable assistance with the proper selection.

3.6.5.3 Gage Cocks. Gage cocks may be installed in the gage line to shut off the gage from the system either to provide isolation to reduce unnecessary wear or to permit gage replacement without system shutdown.

Copyright ASME International
Provided by IHS under license with ASME
No reproduction or networking permitted without license from IHS
Not for Resale

3.6.5.4 Siphons. Siphons (vapor traps) are installed in pressure lines ahead of the gage to provide a seal against steam or other condensable vapors of high temperature. The siphon is a device designed to permit cooling of condensable vapors and retention of the condensate when installed in series between the gage and the pressurized fluid. Condensate may be added at installation or condensation induced by rapid-cooling the siphon. Pressure should always be applied slowly so that the interior of the gage is kept cool by the condensate.

3.6.5.5 Bleeders. Bleeder devices may be utilized to permit flushing, liquid-filling, or draining of the pressure element. The bleeder can also be used to ensure proper filling of the pressure element, especially when precise measurements at low pressures are required. Bleeder devices must be incorporated at gage assembly; they cannot be added at a later time.

3.6.5.6 Heaters. Heaters may be required to protect gage elements and lines from solidification of fluids in the line or gage. Caution must be exercised to prevent overheating.

3.6.5.7 Maximum or Minimum Pointers. For record purposes, it may be desirable to establish the highest or the lowest applied pressure, so an additional pointer (lazy-hand or telltale pointer) may be mounted through the gage window in such a manner that the gage-pressure-indicating pointer will move the second pointer to position of maximum or minimum applied pressure (usually only one value, not both) and remain at that position until manually reset. These devices are frequently available as add-on or replacement assemblies.

3.6.6 Gage Calibration. Gage-operating parameters and gage testing (calibration verification) are covered in detail in ANSI/ASME B40.1 Standard for Gages. It is essential that all gage users and manufacturers operate using the same base standards. Therefore, copies of this American National Standard should be obtained and utilized.

3.6.6.1 Test Gages. Test gages or inspector's gages are commonly used as working standards for gage calibration verification. These gages must be carefully handled to ensure reliable accuracy. Handling must be done with the knowledge that a gage suitable for accurate pressure measurement is a delicate instrument. During its removal and replacement, avoid dropping or jarring the gage or subjecting it to excessive temperature. An accident involving a test gage requires that the gage be given a complete calibration-verification test before further use. Accidents include but are not limited to dropping, jarring, application of pressure in excess of its calibrated range, or application of a fluid considered corrosive to the pressure element.

Test gages should always bear a calibration-verification chart indicating date of last verification and due date of the next calibration verification. It is also desirable to indicate the applicable correction values.

3.6.6.2 Corrections. It may be necessary to apply correction values to gage readings. These values may be obtained during calibration verification. A suggested form for recording this information is provided in Table 3.4.

The corrections are the numerical values to be added algebraically to the gage reading to give the correct pressure. The readings should be corrected for temperature and head effects.

3.6.6.3 Adjustments. Gages having high accuracy ratings are frequently provided with adjustment means, rotatable dials, adjustable pointers or movements, and span adjustments. The first three are readily available to the user and may be used to adjust for errors that are approximately equal over the entire pressure span. In general, they should be used to set the scale (dial) or pointer at one point on the scale for a specific pressure input.

Except in high accuracy test gages, these adjustments should not be used to simply reset the pointer to zero. Span adjustments are not readily accessible to the gage user. This adjustment is usually found on the internal components of the movement or link. Span adjustment may be used to correct a progressive error, uniformly increasing or decreasing over the pressure span. The gage manufacturer's instructions should be consulted and adjustments should only be made by experienced personnel. Calibration verification must be repeated after adjustments have been completed.

3.6.7 Precautions. The pressure-sensing element in most pressure gages is an elastic element subjected to high internal stresses. Applications exist where the possibility of catastrophic failure is present. ANSI/ASME B40.1 covers most of the considerations essential in a pressure gage.

Protective shields should be provided between gages and the person taking readings, particularly in systems where compressed gas and high pressures are involved.

It should be noted that test gages bear a proper current-calibration chart. Proper compensation for fluid head should be indicated, preferably with a

Copyright ASME International
Provided by IHS under license with ASME
No reproduction or networking permitted without license from IHS
Not for Resale

sketch showing any head of liquid in the gage. Check that the gage pointer is fastened securely. This may be accomplished by watching while the pointer is in a free position and the gage is tapped. If loose, remove the gage for recalibration.

Check to determine if a bleeder has been provided in the gages or piping and, if incorporated, that the system has been bled and closed.

If an adjustable throttling device has been installed to control pressure pulsations, it shall be adjusted to leave some pulsation.

All readings shall be taken while the gage is being lightly tapped. The point of view should be located so as to avoid parallax. Actual readings should be recorded on log sheets (see Table 3.4). Corrections should be made when the test has been completed.

Check that the pressure-element materials are compatible with the pressure media.

Make sure that the gages are not subjected to temperatures in excess of manufacturer's recommended values, and that materials used in the gage are compatible for temperatures to be encountered.

3.6.8 Form for Reporting Gage-Calibration Verification. The record of the observations of a test whereby gage-calibration is verified should be made in some suitable form such as that in Table 3.4. The readings in the column marked "Standard Pressure" are the pressures corresponding to the deadweight tester input pressure (weights including the weight tray). The readings in the column marked "Up" are obtained in the order given and the readings in the column marked "Down" are recorded from the bottom upward. The column marked "Average" is then computed as a mean between the ascending and descending columns to the nearest value which can be estimated. The gage correction is the amount to be added algebraically to the average gage reading to give the pressure shown by the standard. If the tests were done before the first use of the gage, hysteresis should then be computed. The gage corrections are copied on a tag attached to the gage, with date, and the gage passed for use. For a gage correction test after use, the variance should be computed.

3.7 SPECIAL APPLICATIONS OF ΔP CELLS

Some very important special applications of pressure and of differential-pressure transmitters, particularly in the process industries, include use in making flow, liquid level, and density measurements. These applications are briefly described.

3.7.1 Flow[14]. The method of interest relates the pressure drop across a metering restriction, such as an orifice plate, a flow nozzle, or a venturi tube to the rate of fluid flow. A differential-pressure transmitter is commonly used to measure this pressure drop and send information to a central control room (see Fig. 3.48 as an example).

The differential-pressure span is often very small relative to the static pressure inside the pipe. For example, it may be on the order of 25 kPa (100 in. H_2O) with a static pressure of 40 MPa (5800 psi), a ratio of 1 part in 1600. This limits the choice of transmitters to those that have been specifically designed for operation up to high static-pressure levels with minimum effect of static-pressure variation on the measurement of the pressure differential.

Associated with high static-pressure operation is the "overrange" characteristic of the flow transmitter. The ability to have full static pressure applied independently to either process port (high-side or low-side overrange) during startup, or in the event of a system malfunction, is essential. A suitable transmitter will maintain its calibrated accuracy.

Figure 3.49 shows schematically the primary of a transmitter that has been designed for flow measurement. The diaphragms, process-cavity flanges, and flange-fittings (vent or drain valve and process adaptors) are selected from a choice of corrosion-resistant materials offered by the manufacturer. These are usually the only parts that come into direct contact with the process fluid.

The schematic shows connecting rods from the diaphragms deflecting a force beam that extends into the transmitter secondary housing. Here, one of many types of motion detectors or force-balancing mechanisms provide either a pneumatic or an electronic output signal. Sometimes, the force beam will be completely eliminated in electronic forms of the transmitter which detect diaphragm motion inside the primary capsule and send an electrical signal to an amplifier in the secondary housing. Some of these designs are covered in other paragraphs.

The center cavity of the primary capsule is filled with silicone oil or other suitable liquid to support the high static pressure of the process. The center cavity is sometimes hermetically sealed by means of an all-welded construction to enable long-term full-vacuum operation. A further function of the filling liquid is to provide damping (in combination with a suitable internal resistance restriction and volume transfer). Flow signals are often noisy, and without this damping would cause noisy output signals to be transmitted to the control room. Excessive damping, however,

Copyright ASME International
Provided by IHS under license with ASME
No reproduction or networking permitted without license from IHS
Not for Resale

TABLE 3.4
RECORDING OF GAGE-TEST DATA SAMPLE

DESIGNATION OF GAGE NO. _____ **OWNER** _____

Make and Type: _____

Size and Range: _____

CONDITIONS DURING TESTS

	Before Use	During Use	After Use
Date and hour of test			
Temperature of gage			
Pressure standard used			

TEST DATA (All in lb per sq in.)									Average Correction of Before and After Tests	Variance Difference Between Before and After Corrections
Standard Pressure	Gage Reading Before Use. Rap Gage Before Reading.				Gage Reading After Use. Rap Gage Before Reading.					
	Up	Down	Average	Correction	Up	Down	Average	Correction		

REMARKS:

(1) Range of pressure during test: _____

(2) Pressure characteristics during use:

(a) *Steady* — Less than 1% per second and 5% per minute, the percentage referring to the full range of the gage.

(b) *Fluctuating* — Changes faster than for "steady" — not regular in occurrence.

(c) *Pulsating* — Changes faster than for "steady" and characterized by cyclic regularity.

(3) Equipment and location where gage was used: _____

(4) Operator making tests: _____

(5) Other remarks: _____

Copyright ASME International
Provided by IHS under license with ASME
No reproduction or networking permitted without license from IHS
Not for Resale

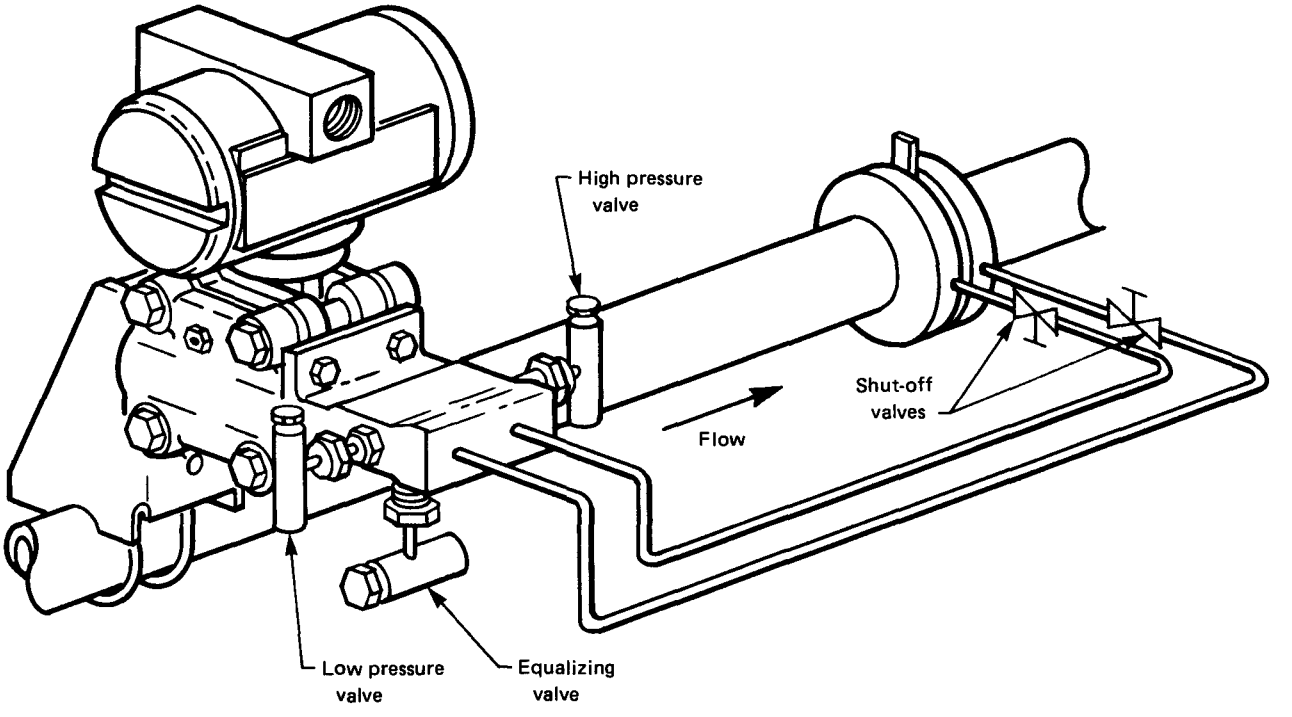

FIG. 3.48 FLOW INSTALLATION
(Courtesy of Taylor Instrument Company)

Copyright ASME International
Provided by IHS under license with ASME
No reproduction or networking permitted without license from IHS
Not for Resale

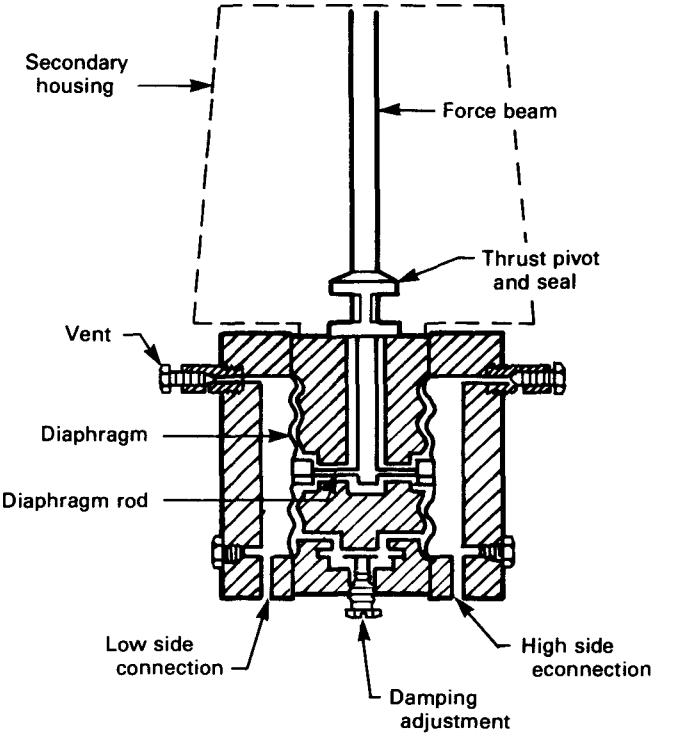

FIG. 3.49 SCHEMATIC OF DIFFERENTIAL-PRESSURE TRANSMITTER PRIMARY FOR FLOW MEASUREMENT
(Courtesy of Taylor Instrument Company)

Copyright ASME International
Provided by IHS under license with ASME
No reproduction or networking permitted without license from IHS
Not for Resale

should be avoided because of the square-law relationship between flow velocity and differential pressure that will lead to erroneous flow measurements. Most instrument manufacturers, therefore, place an upper limit on the adjustment they provide.

Overrange protection of the diaphragms is provided by mechanical support from a contoured back-up profile in the body block. There are other designs in which the diaphragms are supported hydraulically by closing a valve to prevent complete volume transfer.

Other requirements relate to, and vary substantially with, the operating environment. They include compensation for outdoor ambient temperature and process temperature variations, immunity to vibration and mechanical shock, the need to maintain calibrated accuracy with power-supply variations and environmental interferences (radio frequency and magnetic), and sometimes the need to operate safely in explosive atmospheres (dust, hydrocarbons, etc.).

The adjustments of concern to the user are for zero, span, and elevation/supression.

3.7.1.1 Adjustment for Zero. Zero is adjusted with the input at the lower range value of the pressure differential (usually zero) by first closing the valve to the low-pressure impulse line and then opening the equalizing valve to ensure that the process cavities are at the same pressure (see Fig. 3.48). This procedure is performed after installing the transmitter, to correct installation effects, and after the process cavities have been properly filled or drained (depending upon the type of installation).

3.7.1.2 Adjustment for Span. Adjustment for span is normally made by the factory or instrument shop. It requires an application of a known pressure differential, usually equal to the upper range value, in addition to zero. An exception is when the transmitter is being returned to a previously calibrated span setting.

3.7.1.3 Adjustment for Elevation/Supression. The elevation/suppression adjustment operates like a coarse zeroing adjustment and is used only to achieve ranges that are not zero based.

3.7.2 Liquid Level. Many of the liquid-level measuring devices used by industry for accuracies to about 0.5% of span depend upon the fundamental equation

$$\text{Pressure} = (\text{Density})\,(\text{Height})$$

Pressure and fluid height bear a direct relationship if density remains constant, and for most applications this is a valid assumption. Density compensation will be discussed later (see para. 3.7.2.4).

The same differential-pressure transmitters as were described in para. 3.7.1 may also be used to measure liquid level. An impulse line from below the minimum liquid level in the tank is connected to the high-side transmitter-connection and, following the manufacturer's instructions, air is purged from this line and from the process cavity of the transmitter, allowing liquid from the tank to enter. The low-side transmitter connection is vented to atmosphere in an open-tank application or connected to the vapor space above the maximum liquid level in closed tanks, as indicated for the direct-mounted installations that follow. Using a differential-pressure transmitter with impulse-line process connections is generally the less expensive approach if process fluid can be tolerated in these lines and in the process cavities of the transmitter.

3.7.2.1 Open-Tank Installations. An example of a direct-mounted liquid-level transmitter capsule for open-tank service is shown schematically in Fig. 3.50, and its application, mounted to a tank nozzle, is shown in Fig. 3.51. The flush diaphragm is suitable for applications where the process liquid is free from suspended solids. An extended diaphragm form eliminates the pocket at the transmitter connection and should be used for slurries and viscous liquids. Figure 3.52 shows a variation of the transmitter with the extended diaphragm and a remote seal element.

3.7.2.2 Closed-Tank Installations. Closed-tank liquid-level applications differ from open-tank applications in that the pressure over the liquid may be different from atmospheric. Figure 3.53 is a schematic diagram of a level transmitter for closed-tank service, and Figs. 3.54 through 3.60 show examples of closed-tank installations, using both integral and remote-seal transmitter forms. These are differential-pressure transmitters with one side connected through a compensating leg to measure pressure above the liquid.

The compensating leg can be either wet or dry depending on the characteristics of the process vapor. Any change in liquid level in the compensating leg, however, will cause measurement error. Also, ambient-temperature changes can result in excessive errors due to changing specific gravities in the wet leg. A dry leg is used when the process vapor is not readily condensable or when the compensating leg is at a higher temperature than the tank interior (see Figs. 3.54, 3.55, and 3.56). A trap installed at the bottom of the leg minimizes the possibility of condensate collecting in the compensating-diaphragm cavity.

When the process vapor is condensable, a wet leg is recommended (see Figs. 3.57, 3.58, and 3.59). The leg can be filled with process liquid or a suitable seal liquid (see Table 3.5), using a filling tee installed at the top

Copyright ASME International
Provided by IHS under license with ASME
No reproduction or networking permitted without license from IHS
Not for Resale

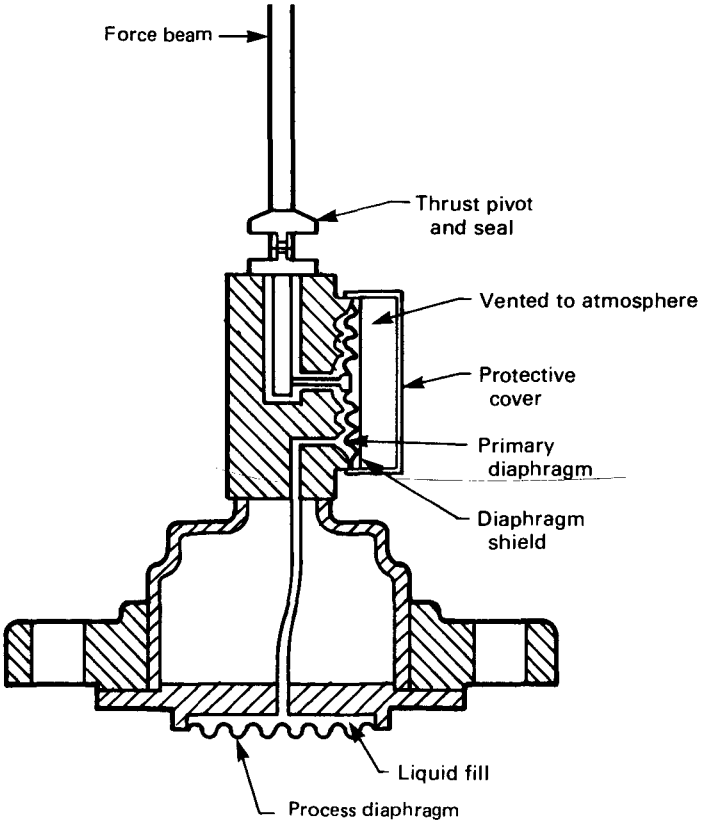

FIG. 3.50 SCHEMATIC DIAGRAM OF OPEN-TANK TRANSMITTER PRIMARY
(Courtesy of Taylor Instrument Company)

Copyright ASME International
Provided by IHS under license with ASME
No reproduction or networking permitted without license from IHS
Not for Resale

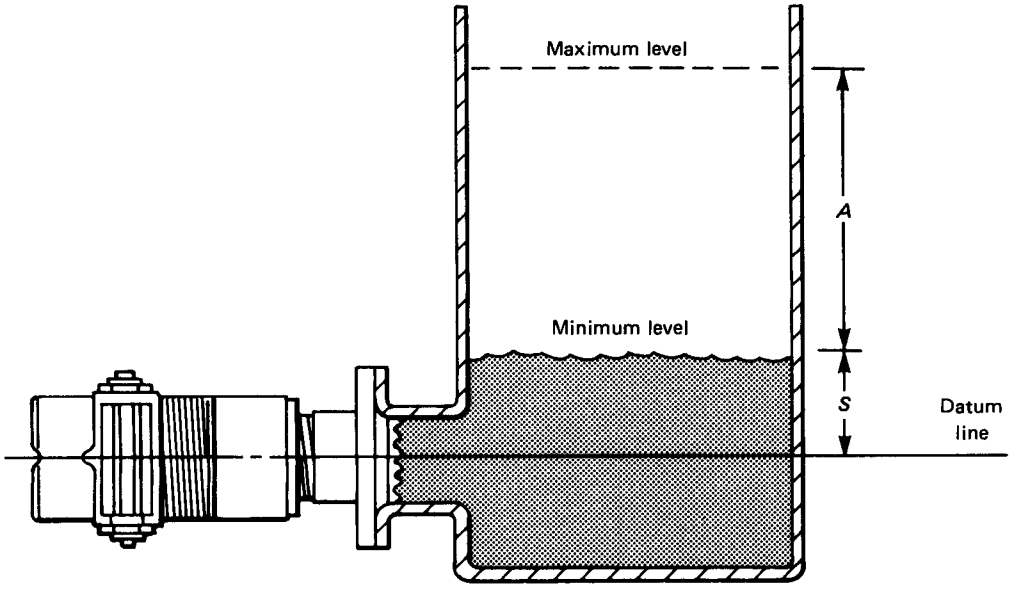

FIG. 3.51 OPEN-TANK INSTALLATION WITH TRANSMITTER MOUNTED DIRECTLY TO TANK NOZZLE
(Courtesy of Taylor Instrument Company)

Copyright ASME International
Provided by IHS under license with ASME
No reproduction or networking permitted without license from IHS
Not for Resale

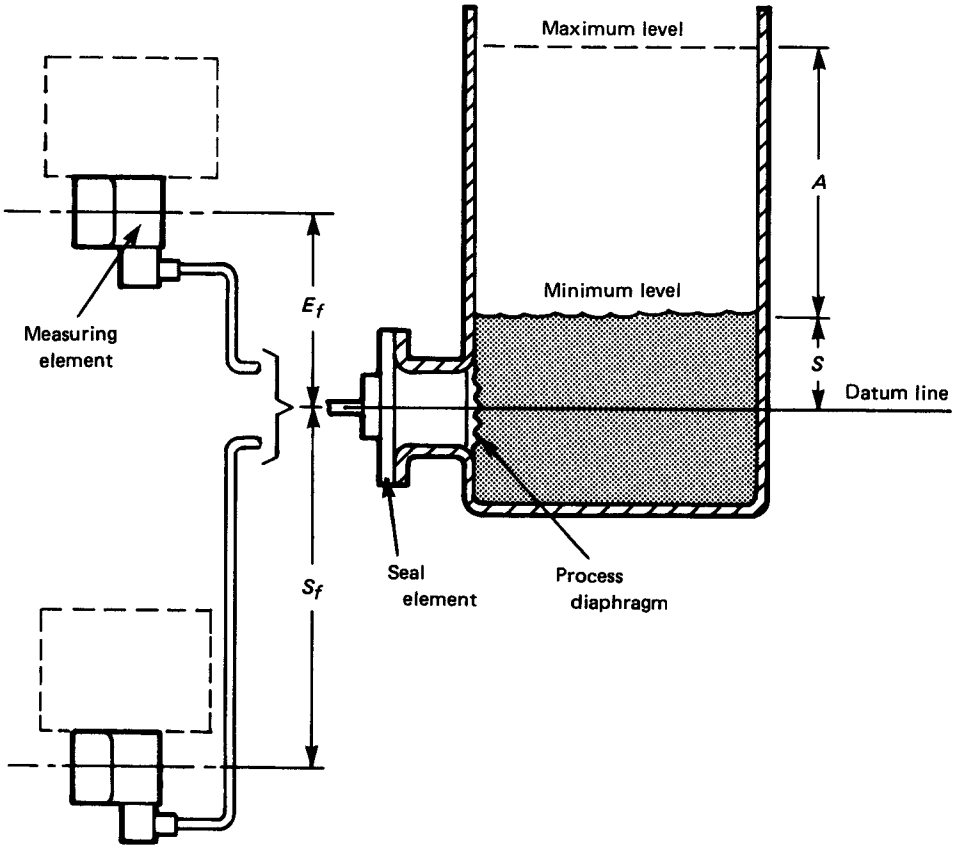

FIG. 3.52 OPEN-TANK INSTALLATIONS WITH REMOTE SEAL TYPE OF TRANSMITTER
(Courtesy of Taylor Instrument Company)

Copyright ASME International
Provided by IHS under license with ASME
No reproduction or networking permitted without license from IHS
Not for Resale

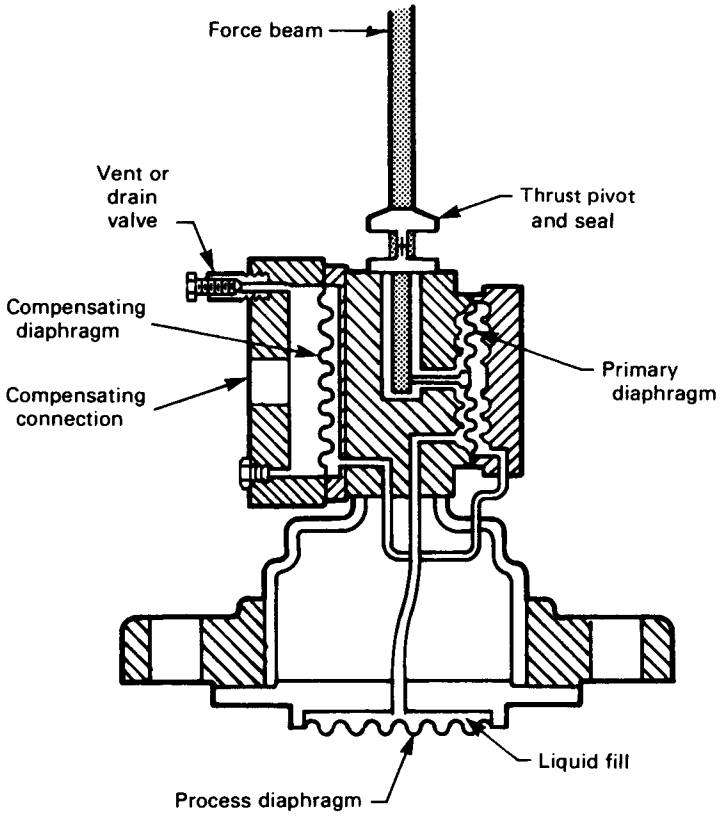

FIG. 3.53 SCHEMATIC DIAGRAM OF CLOSED-TANK TRANSMITTER PRIMARY
(Courtesy of Taylor Instrument Company)

Copyright ASME International
Provided by IHS under license with ASME
No reproduction or networking permitted without license from IHS
Not for Resale

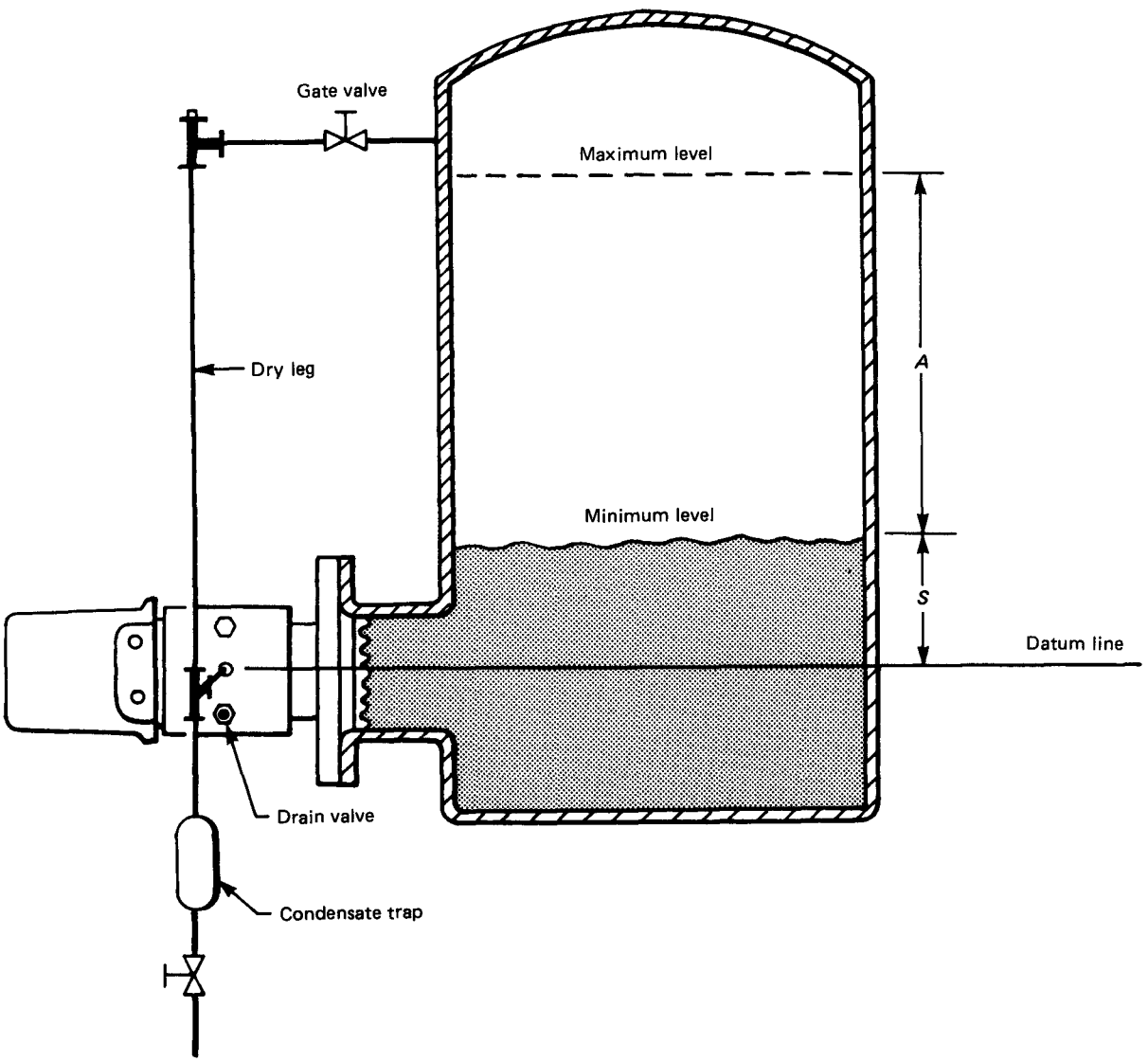

FIG. 3.54 CLOSED-TANK INSTALLATION, DRY LEG
(Courtesy of Taylor Instrument Company)

Copyright ASME International
Provided by IHS under license with ASME
No reproduction or networking permitted without license from IHS
Not for Resale

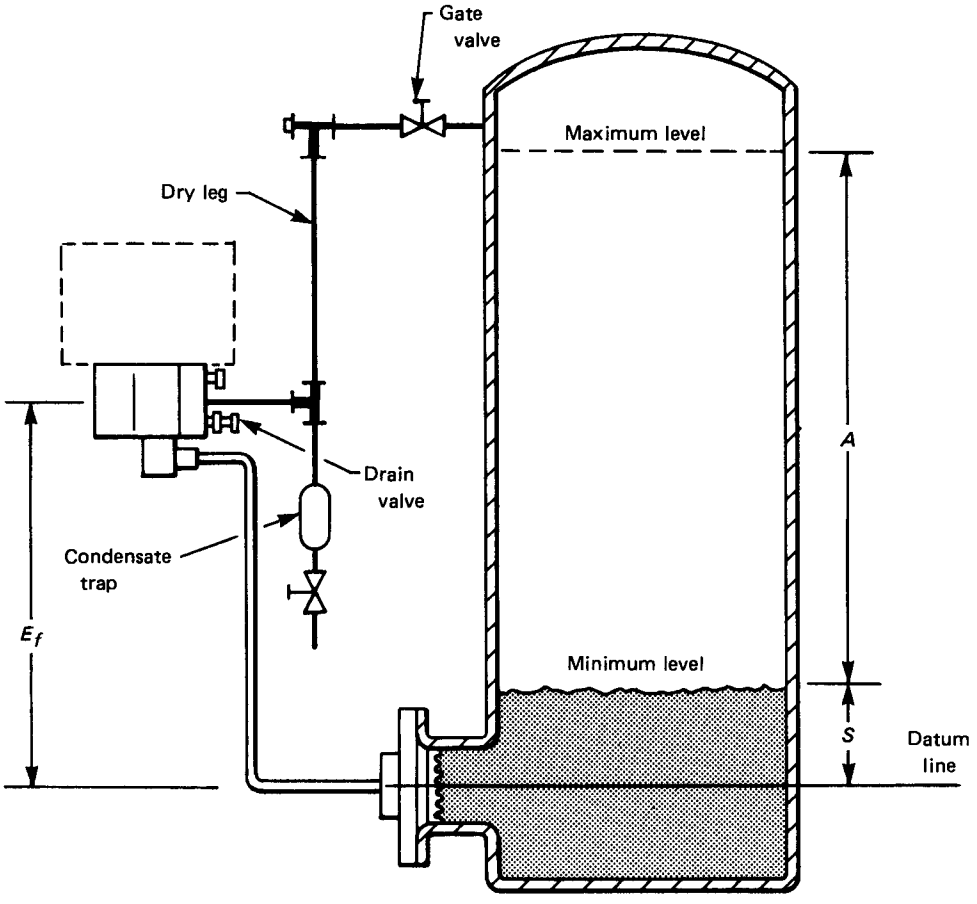

FIG. 3.55 CLOSED-TANK INSTALLATION, DRY LEG TRANSMITTER ABOVE DATUM LINE
(Courtesy of Taylor Instrument Company)

Copyright ASME International
Provided by IHS under license with ASME
No reproduction or networking permitted without license from IHS
Not for Resale

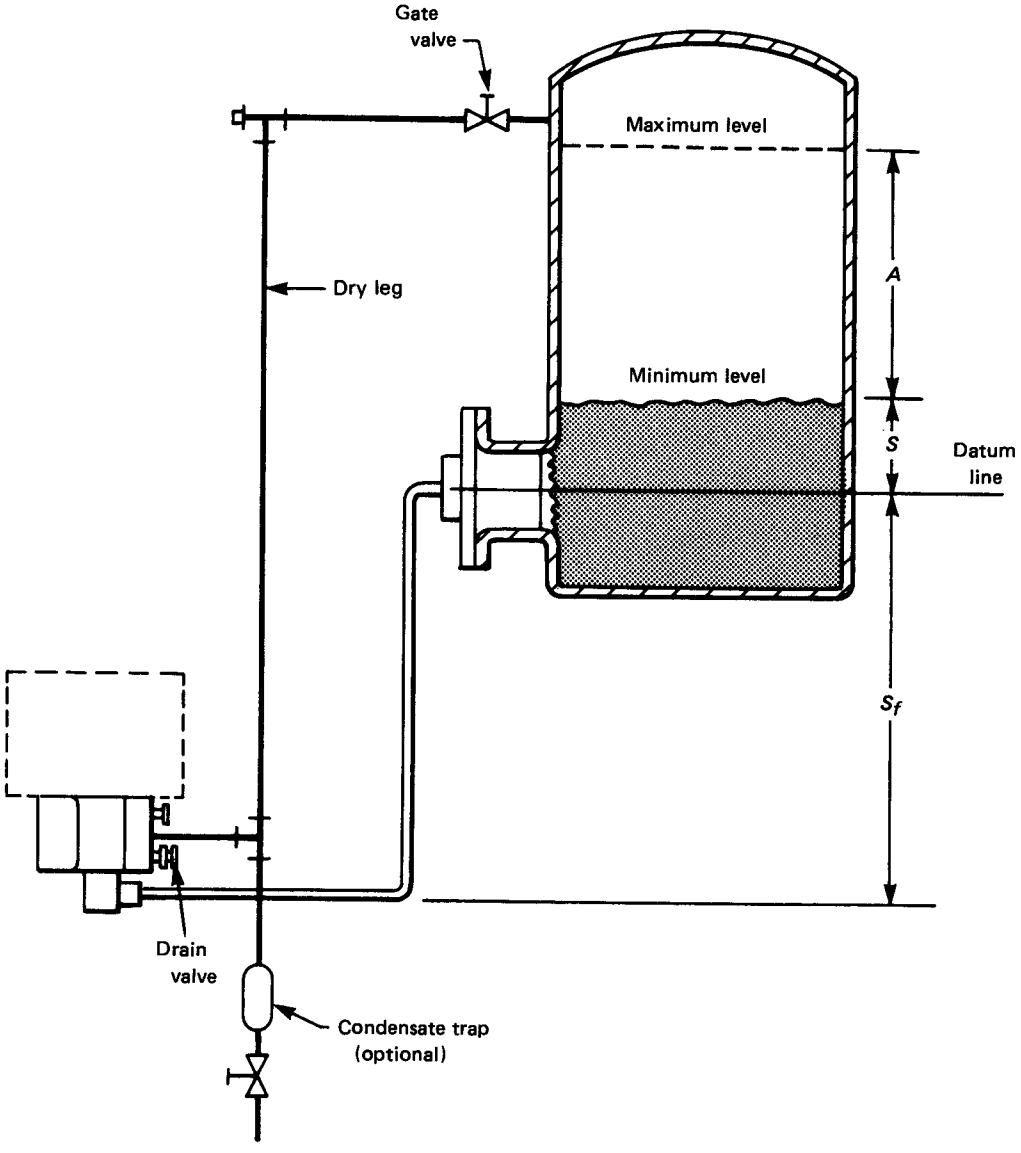

FIG. 3.56 CLOSED-TANK INSTALLATION, DRY LEG TRANSMITTER BELOW DATUM LINE
(Courtesy of Taylor Instrument Company)

Copyright ASME International
Provided by IHS under license with ASME
No reproduction or networking permitted without license from IHS
Not for Resale

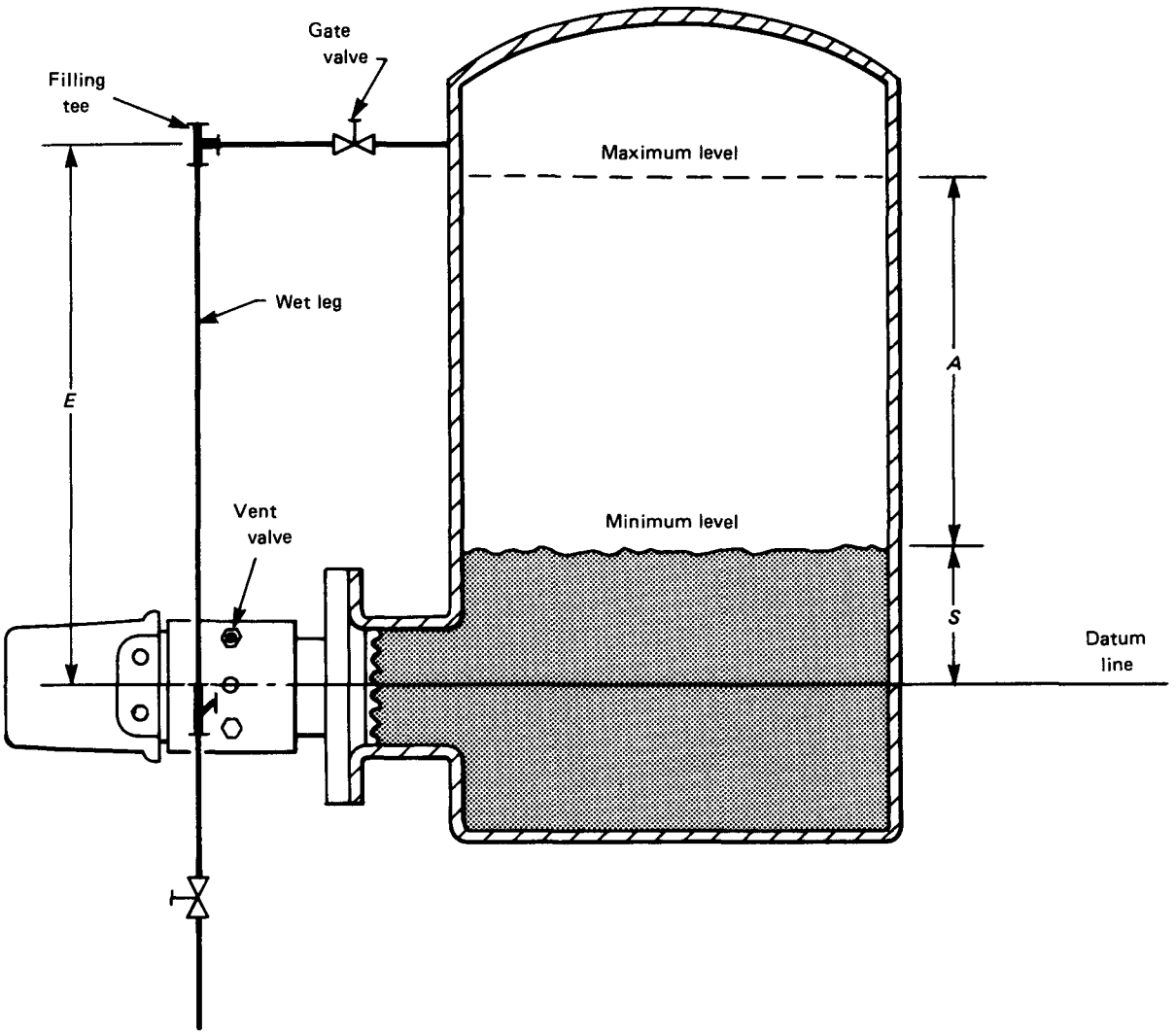

FIG. 3.57 CLOSED-TANK INSTALLATION, WET LEG
(Courtesy of Taylor Instrument Company)

Copyright ASME International
Provided by IHS under license with ASME
No reproduction or networking permitted without license from IHS
Not for Resale

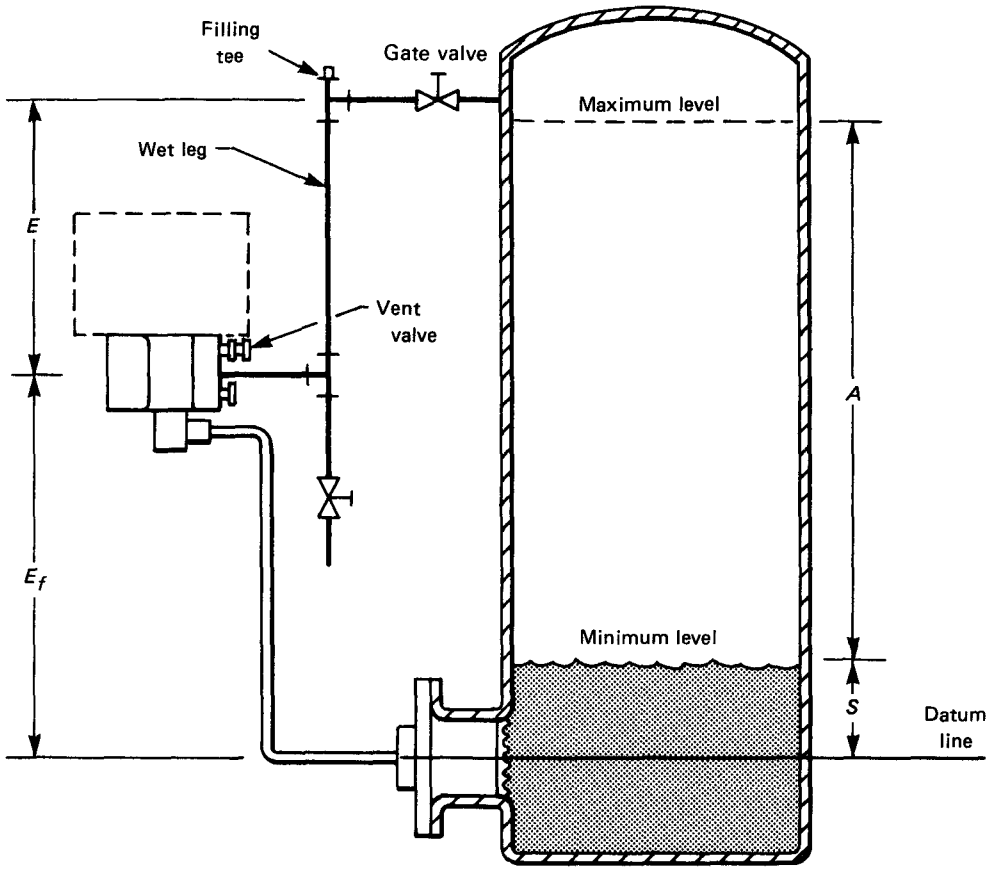

FIG. 3.58 CLOSED-TANK INSTALLATION, WET LEG TRANSMITTER ABOVE DATUM LINE
(Courtesy of Taylor Instrument Company)

Copyright ASME International
Provided by IHS under license with ASME
No reproduction or networking permitted without license from IHS
Not for Resale

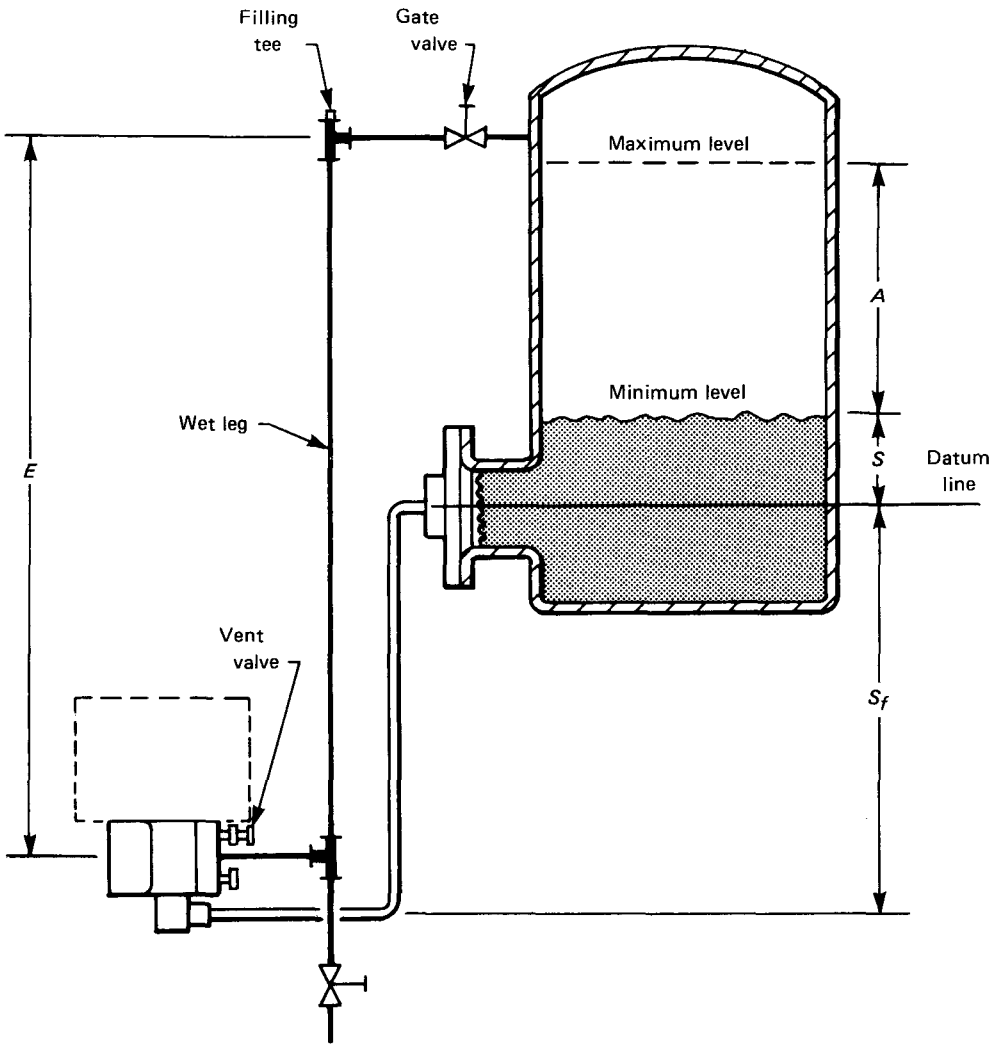

FIG. 3.59 CLOSED-TANK INSTALLATION, WET LEG TRANSMITTER BELOW DATUM LINE
(Courtesy of Taylor Instrument Company)

Copyright ASME International
Provided by IHS under license with ASME
No reproduction or networking permitted without license from IHS
Not for Resale

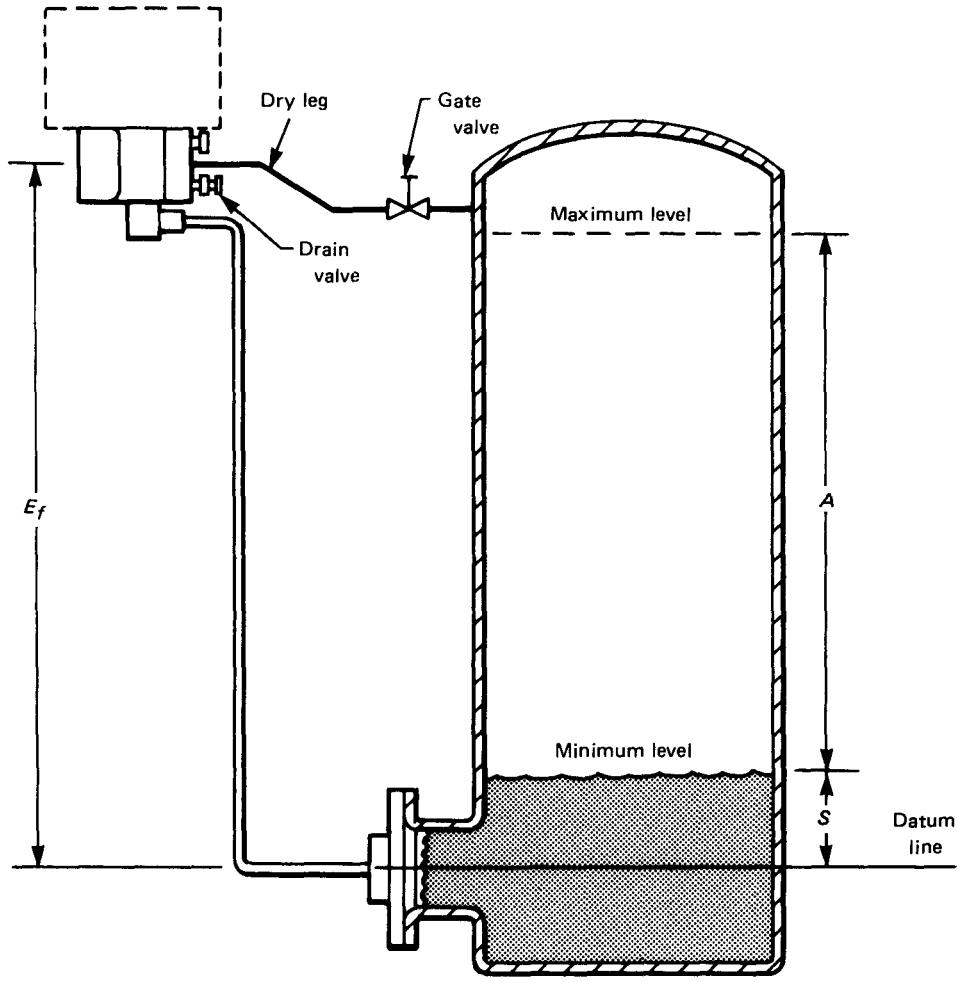

FIG. 3.60 CLOSED-TANK INSTALLATION, DRY LEG TRANSMITTER ABOVE UPPER PROCESS TAP
(Courtesy of Taylor Instrument Company)

Copyright ASME International
Provided by IHS under license with ASME
No reproduction or networking permitted without license from IHS
Not for Resale

of the leg. The wet leg can be avoided if the transmitter can be installed near the top of the tank (see Fig. 3.60), so that the condensate drains back into the tank.

In all of the installations shown, the minimum measured level must be at or above the datum line. Also, when the installation is to be used on vacuum service, the transmitter should usually be mounted at or below the datum line (see Figs. 3.54, 3.56, 3.57, and 3.59) to keep the filling liquid pressurized above its vapor pressure. However, this requirement varies somewhat among manufacturers, depending upon their filling pressure, so emphasis is placed on following the manufacturer's recommendations.

To determine the span and range values for a specific application, use the following equations.

$$\text{Span} = AG_t$$

$$\text{Lower Range Value} = SG_t + S_fG_f - EG_s - E_fG_f$$

$$\text{Upper Range Value} = (A + S)\,G_t + S_fG_f - EG_s - E_fG_f$$

where

A, S, S_f, E, and E_f = length as shown in Figs. 3.51, 3.52, and 3.54 through 3.60

G_t = specific gravity of the liquid in the tank

G_s = specific gravity of the liquid in the wet leg

G_f = specific gravity of the liquid in the tube system

A negative upper or lower range value would indicate that positive pressure must be applied to the compensating side of the measuring element when calibrating a transmitter for this range. Refer to Table 3.6 for the type of calibration required.

Note that specific gravity terms have been used as a convenience in the preceding equations rather than density, causing the span values to be in terms of height of an equivalent column of water. This is because of the extensive use of water and its role as a reference standard for many pressure measurements.

3.7.2.3 Repeaters. Another device often used for level measurement is a direct-mounted pneumatic force-balance transmitter that reproduces a process pressure on a one-to-one basis (see Fig. 3.61). Sometimes called a "repeater," it has no particular range or calibration inherent in its construction.

TABLE 3.5
SEAL FLUID SELECTION CHART
(Courtesy of Taylor Instrument Company)

Liquid	Freezing Point/ High-Temperature Limit	Specific Gravity	Recommended Service
Water	0/+93	1.00	General usage
50% Water — 50% Glycerin	−28/+96	1.14	Anti-freeze for hydrocarbon service
50% Water — 50% Ethylene Glycol	−36/+149	1.07	Anti-freeze for other than hydrocarbon service
Fluorinated Hydrocarbon (generally high viscosity)	Below −18/+260	1.90 [Note (1)] at 38°C	Acids, alkalies, strong salts
Silicone (high temperature)	+21/+316	...	...
Silicone (low temperature)	−51/+149	...	...

NOTE:
(1) Changes greatly with temperature, affecting measurement accuracy.

The useful working range is determined entirely by the air supply and the required output pressure, which can be biased relative to the measured pressure using a zeroing adjustment. A sensing diaphragm contacts the process liquid on a nearly flat surface. There is no filling liquid, which simplifies maintenance. Linearity varies somewhat with the choice of supply pressure and with the transmitter design, but it is usually best at midrange. The manufacturer should be consulted for details of operation, application, associated equipment, and accuracy.

3.7.2.4 Density Compensation. It may be important to accurately know the level under conditions of varying specific gravity. The differential-pressure type of level meter measures the product of height and a specific gravity. If a second instrument is added which measures specific gravity and the reading on the level meter is divided by the gravity reading, the actual level of the liquid is the result. A small computer (pneumatic or electronic) can be used to perform the division and provide a compensated level signal.

Copyright ASME International
Provided by IHS under license with ASME
No reproduction or networking permitted without license from IHS
Not for Resale

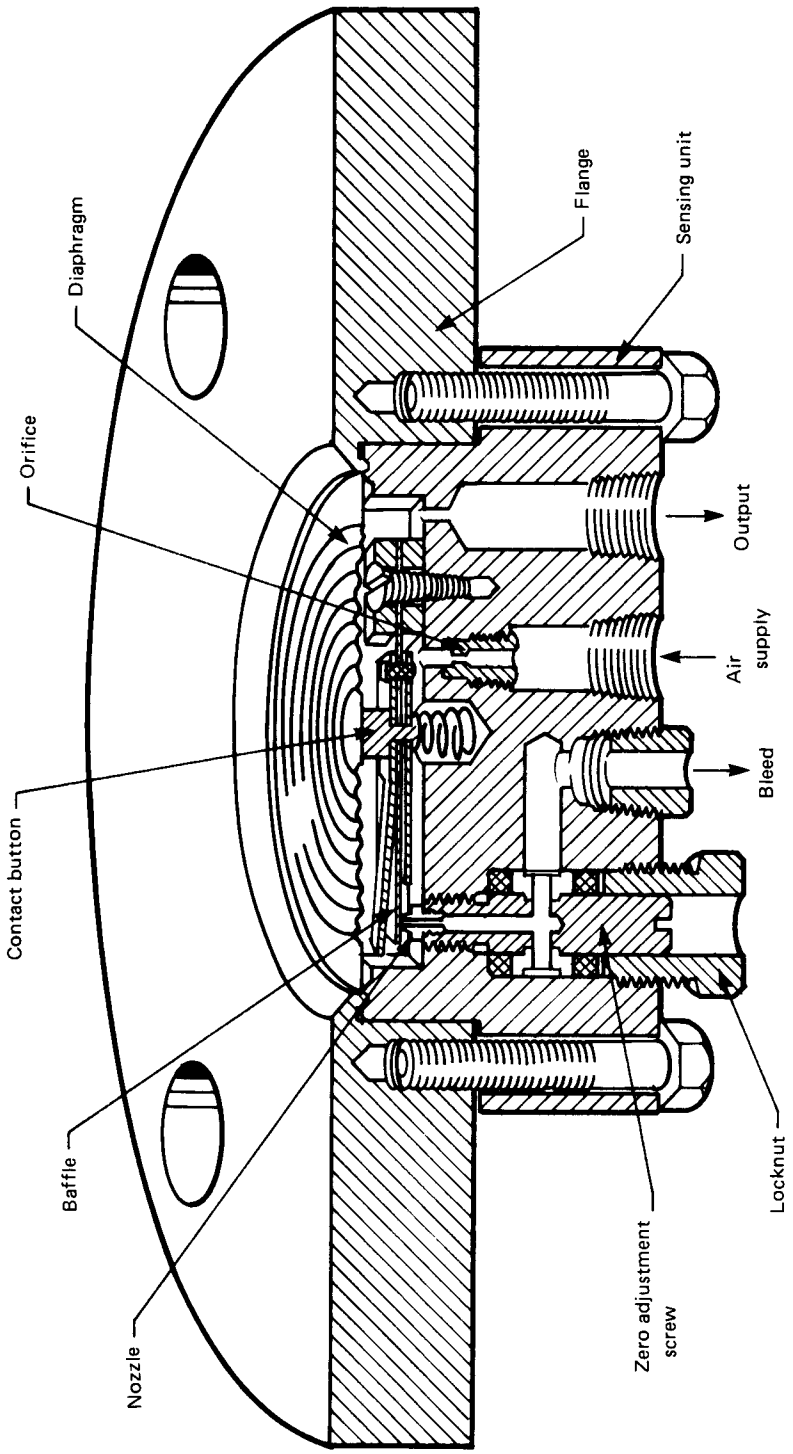

FIG. 3.61 A "REPEATER" TYPE LEVEL MEASUREMENT DEVICE
(Courtesy of Taylor Instrument Company)

Copyright ASME International
Provided by IHS under license with ASME
No reproduction or networking permitted without license from IHS
Not for Resale

TABLE 3.6
TYPE OF CALIBRATION REQUIRED FOR VARIOUS APPLICATIONS
(Courtesy of Taylor Instrument Company)

Transmitter Application			
Service	**Initial Level Condition**	**Transmitter Elevation**	**Type of Calibration**
Open tank or closed tank with dry leg	Minimum level at datum line	At datum line	Zero based
		Above datum line	Elevated zero
		Below datum line	Suppressed zero
	Minimum level above datum line	Above datum line	Elevated zero [Note (1)]
		At or below datum line	Suppressed zero
Closed tank with wet leg	Minimum level or above datum line	Any transmitter elevation	Elevated zero

NOTE:
(1) Can be suppressed zero depending on relative head pressures.

3.7.3 Liquid Density (Specific Gravity). Density is mass per unit volume and is usually expressed as kilograms per cubic meter (kg/m^3). Specific gravity is just one of many numerical scales which may be applied to density-measuring instruments. It is the ratio of the density of a liquid to the density of water, the temperature of both liquids being stated. Thus, sp. gr. 0.904 20°C/4°C means that the density of the liquid sample at 20°C divided by the density of water 4°C is 0.904. Since specific gravity is a ratio, it is dimensionless.

3.7.3.1 Basic Concepts. The application of a differential-pressure instrument to density measurement develops from the fact that pressure at the bottom of a vertical column of liquid is the product of liquid density multiplied by the height of the column. It is readily seen, however, that a simple hookup such as is shown in Fig. 3.62 would be unsatisfactory for most applications because of insufficient sensitivity. A more useful differential arrangement (see Fig. 3.63) — loading one side of the instrument with a constant known pressure — would allow the pressure span to be shortened. By making its span one-tenth that of the instrument in Fig. 3.62, its readability is increased by a factor of 10. If the instrument was provided with a suppression adjustment (usually available in differential-pressure transmitters), the constant pressure to the low-pressure side of the differential instrument (represented by the reference water column of Fig. 3.63) could be eliminated. The low-side pressure connection would simply be vented to the atmosphere.

3.7.3.2 Sample-Column Method. A common method of measuring the density of a process liquid is by means of a sample column shown schematically in Fig. 3.64. The sample enters the column at the bottom and overflows into a return line to establish a constant sampling height. A bubbler tube connected to the differential-pressure instrument makes possible the measurement of pressure at the bottom of this column without bringing the process liquid into contact with the instrument. The resulting backpressure is related to the liquid level measured vertically from the base of the dip tube to the liquid surface. This arrangement makes it easy to measure or adjust the head.

The required height of the sample column is determined by dividing the differential-pressure span of the instrument (height of water) by the density span. Here, the temptation is to use a short instrument pressure span in order to make the sample column short; however, the air-pressure change in the tube is about 3 mm (0.01 in.) water during the formation of every bubble, thereby placing a practical minimum length on the column for signal stability.

The diameter of the sample column is also important. For good speed of response, it is desirable to change the sample at least once per minute. However, one must remember that flow is always accompanied by pressure drop; also, fluctuations in flow will change the liquid head above the overflow weir which is the perimeter of the top of the sample-column pipe. A good approach to the problem is to pick a pipe size and then calculate its performance using the sample flow rate, its variation, and the volume and top perimeter of the proposed pipe. The variables to be determined are the rate of change of the sample, the pressure change due to flow variation, and the head change of liquid above the crest of the weir (Francis formula[2]) due to flow variation.

[2]Francis Formula

$$h = \left(\frac{Q}{1.84L}\right)^{2/3}$$

where
h = head of liquid above crest of weir, m
L = perimeter of top of sample column, m
Q = flow rate over weir, m^3/s

or

$$h = \left(\frac{Q}{3.33L}\right)^{2/3}$$

for h and L in ft, and Q in ft^3/s

Copyright ASME International
Provided by IHS under license with ASME
No reproduction or networking permitted without license from IHS
Not for Resale

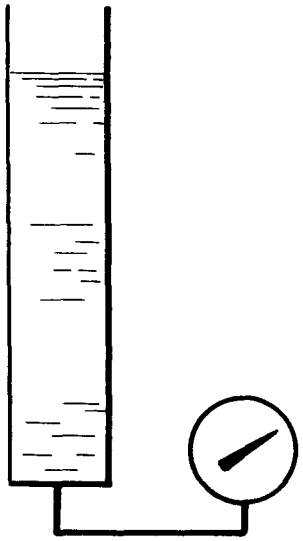

FIG. 3.62 HYDROSTATIC HEAD PROVIDES ONE METHOD OF DENSITY MEASUREMENT
(Courtesy of Taylor Instrument Company)

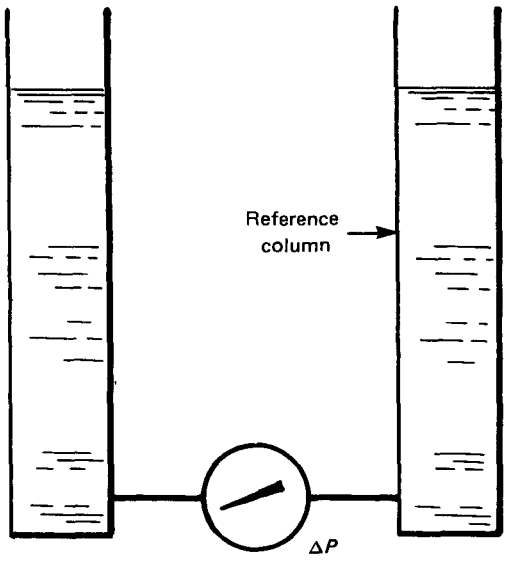

FIG. 3.63 DIFFERENTIAL HYDROSTATIC HEAD INCREASES SENSITIVITY OF DENSITY MEASUREMENT
(Courtesy of Taylor Instrument Company)

Copyright ASME International
Provided by IHS under license with ASME
No reproduction or networking permitted without license from IHS
Not for Resale

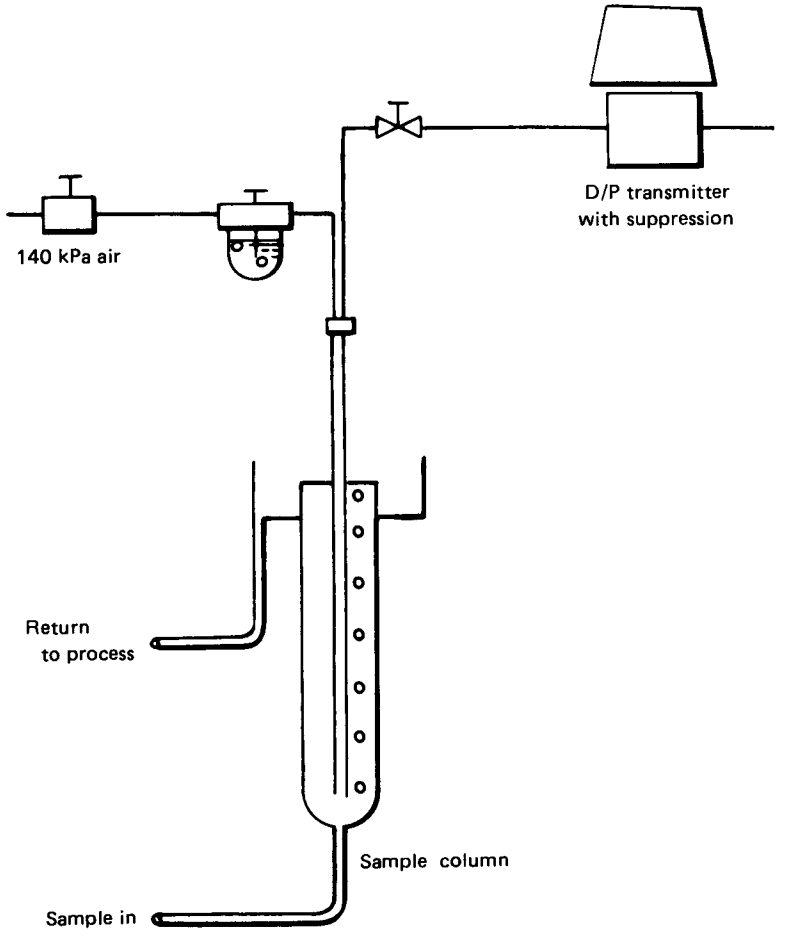

FIG. 3.64 COMMON METHOD OF MEASURING DENSITY OF A PROCESS LIQUID
(Courtesy of Taylor Instrument Company)

Copyright ASME International
Provided by IHS under license with ASME
No reproduction or networking permitted without license from IHS
Not for Resale

TABLE 3.7
VARIATIONS IN DENSITY
FOR DIFFERENT FLUIDS
(Courtesy of Taylor Instrument Company)

Liquid	Change in Density	
	Per °C	Per °F
Water at 15°C (59°F)	0.00016	0.00009
Water at 31°C (88°F)	0.00032	0.00018
Water at 80°C (176°F)	0.00062	0.00034
Sugar, 50% solution at 20°C (68°F)	0.00036	0.00020
Caustic Soda (NaOH),50% solution at 20°C (68°F)	0.00073	0.00041

If a bubble tube is used, pressure on the bubbles must be held constant. This requires a good quality air-regulator upstream from the adjustable restriction.

Temperature fluctuation is by far the greatest source of error in density measurements. This is apparent from a few examples shown in Table 3.7. For petroleum products and organic solvents, the temperature effects are much greater than for aqueous liquids, and range from 0.0007 to 0.0014/°C. Therefore it may be necessary to apply a heat-exchanger and temperature-controller to the incoming sample.

Copyright ASME International
Provided by IHS under license with ASME
No reproduction or networking permitted without license from IHS
Not for Resale

SECTION 4 — PRESSURE MEASUREMENT INSTALLATIONS

While the importance of the proper choice of a pressure-measuring device and its calibration is not to be understated, it is the application of the selected device to the actual pressure measurement that often poses the greatest difficulty. As any experienced test engineer can attest, it is quite a different matter to make accurate pressure measurements in a field environment (which is characterized by a combination of noise, vibration, moisture, and temperature fluctuations) than to make a calibration under controlled laboratory conditions. The ideal constant-pressure source used for calibration purposes is replaced by a pressure sensor of some sort, usually placed in a moving fluid stream which may contain pressure oscillations resulting from the flow field. The pressure sensor may range in complexity from a tap in a pipe wall to a probe which must be calibrated for compressibility and flow angle effects. Between the pressure sensor and the pressure indicator there may be many feet of connecting tubing introducing additional problems.

It is the intention of this Section to guide the test engineer in the set-up of his instrumentation so as to minimize the additional uncertainty introduced in a pressure measurement made in the field environment.

4.1 PRESSURE TAPS

The basic pressure sensor is the pressure tap or piezometer. A pressure tap usually takes the form of a hole drilled in the side of a flow passage and is assumed to sense the true static pressure. When the fluid is moving past the tap, which is usually the case, the tap will not indicate the true static pressure. The streamlines are deflected into the hole as shown in Fig. 4.1, setting up a system of eddies. The stream-line curvature results in a pressure at the tap "mouth" different from the true fluid pressure. These factors in combination result in a higher pressure at the tap "mouth" than the true fluid pressure, a positive pressure error.

4.1.1 Velocity-Induced Errors. The magnitude of the pressure error of a carefully made square-edged pressure tap is a function of the Reynolds number R_d^* based on the shear velocity v^* and the tap diameter d. The shear velocity equals the square root of the ratio of the local wall shear stress τ_o to the fluid density at the wall ϱ.

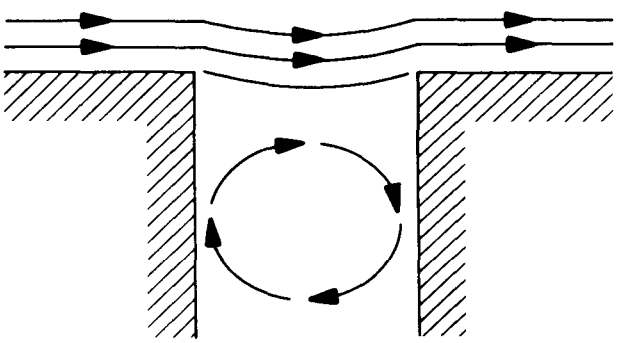

FIG. 4.1 PRESSURE TAP FLOW FIELD

$$v^* = \sqrt{\frac{\tau_o}{\varrho}}$$

The data of Shaw [15], Rainbird [16], and Franklin and Wallace [17] for taps with geometry as shown in Fig. 4.2, are correlated by the following expressions [18]:

$$\frac{\Delta P}{\tau_o} = 0.000157\,(R_d^*)^{1.604}$$

For $R_d^* = v^* d/\upsilon \leq 385$

$$\frac{\Delta P}{\tau_o} = 0.269\,(R_d^*)^{0.353}$$

for $R_d^* > 385$ (extrapolation beyond $R_d^* \cong 1000$ may be unreliable)

Figure 4.3 shows the errors for different-size taps in fully developed flow in a smooth pipe of diameter D. The errors are nondimensionalized by the dynamic pressure $q = 1/2\,(\varrho V^2)$ and are a function of the pipe

Copyright ASME International
Provided by IHS under license with ASME
No reproduction or networking permitted without license from IHS
Not for Resale

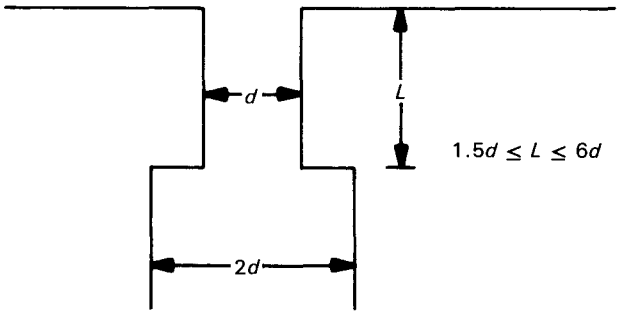

FIG. 4.2 TAP GEOMETRY

Reynolds number. Larger tap diameters and higher velocities give larger errors. Similar calculations have been carried out for throat taps in an ASME nozzle [19, 20].

The above information represents a correlation of available experimental data for a limited Reynolds number range. Other correlations have been found to be more representative at higher Reynolds numbers, such as those encountered in throat tap nozzles (see Ref. [21]).

4.1.2 Other Sources of Errors. The effect of compressibility on tap errors is not well understood or demonstrated, even though correlations for this effect have been suggested [16, 22]. The only conclusion that can be reached is that at Mach numbers near unity, the tap error is greatly magnified and measurements in this region should be avoided if possible.

When a pressure tap is located in an accelerating flow field, the external pressure gradient is the significant parameter for correlating tap error. It has been found [16, 23, 24, 25] that the effect of the pressure gradient is to move the effective location of the tap upstream from 0.30 to 0.37 tap diameters. The lower number corresponds to incompressible flow while the higher number corresponds to nearly sonic flow.

In most cases it is possible to reduce the pressure-tap error by using taps of smaller diameter. The limitation is, however, that it is more difficult to make a smaller tap that is free from burrs. The presence of burrs of a height greater than about 0.008 times the tap diameter will greatly magnify the tap error [15]. Similarly, rounding of the tap, or locating the tap at positions other than normal to the surface will also affect the tap error as shown in Fig. 4.4 [26], where relative errors are shown as percentages of the dynamic pressure.

4.2 PRESSURE PROBES

4.2.1 Total Pressure Probes. Total pressure probes are used to determine the total pressure at a specific location. Total pressure is used to determine head-loss data and to establish velocities, state points, and flow rates. By definition, total pressure can be sensed only by stagnating the flow isentropically.

4.2.1.1 Impact Tube. An impact tube or Pitot tube is an open-end tube placed in the flow field pointing directly upstream (see Fig. 4.5). The pressure in the tube is total pressure P_t. The maximum velocity can be determined by changing the orientation of the Pitot tube until a maximum total pressure is observed. If the static pressure P_s is known and the fluid is incompressible, the velocity pressure P_v can be calculated as the differential between the total and static pressure. This can be used to calculate the velocity V of the fluid at the impact tube's location. For incompressible flow of density ϱ:

$$V = \sqrt{\frac{2(P_t - P_s)}{\varrho}}$$

The impact tube can be traversed across a duct to determine the velocity profile. The shape of the tip determines the sensitivity of the probe to flow angularity (flow not parallel to the head). Figure 4.6 gives the variation of total pressure indication with angle of attack and geometry for Pitot tubes, where ΔP_t is the change in total pressure and P_v is the velocity pressure [27].

4.2.1.2 Kiel Probe. A Kiel probe resembles an impact tube surrounded by a cylindrical shroud to direct the flow parallel to the head of the impact tube (see Fig. 4.7). Kiel probes are used because they are relatively insensitive to pitch-and-yaw angles up to angles of 40 deg. or more measured from the axis of the head. They are suitable for measuring total pressure in cases where the exact flow direction is unknown or varies with operating conditions.

Other types of probes are used to measure total pressure. All of these probes operate on the principle of stagnating the flow isentropically (as occurs at the upstream side of a cylinder oriented perpendicular to the flow field) (see Fig. 4.8).

4.2.2 Static Pressure Probes. Static pressure probes sense the static pressure of a fluid field whether the fluid is in motion or at rest. Static pressure is required to determine fluid velocity and is useful in obtaining flow

Copyright ASME International
Provided by IHS under license with ASME
No reproduction or networking permitted without license from IHS
Not for Resale

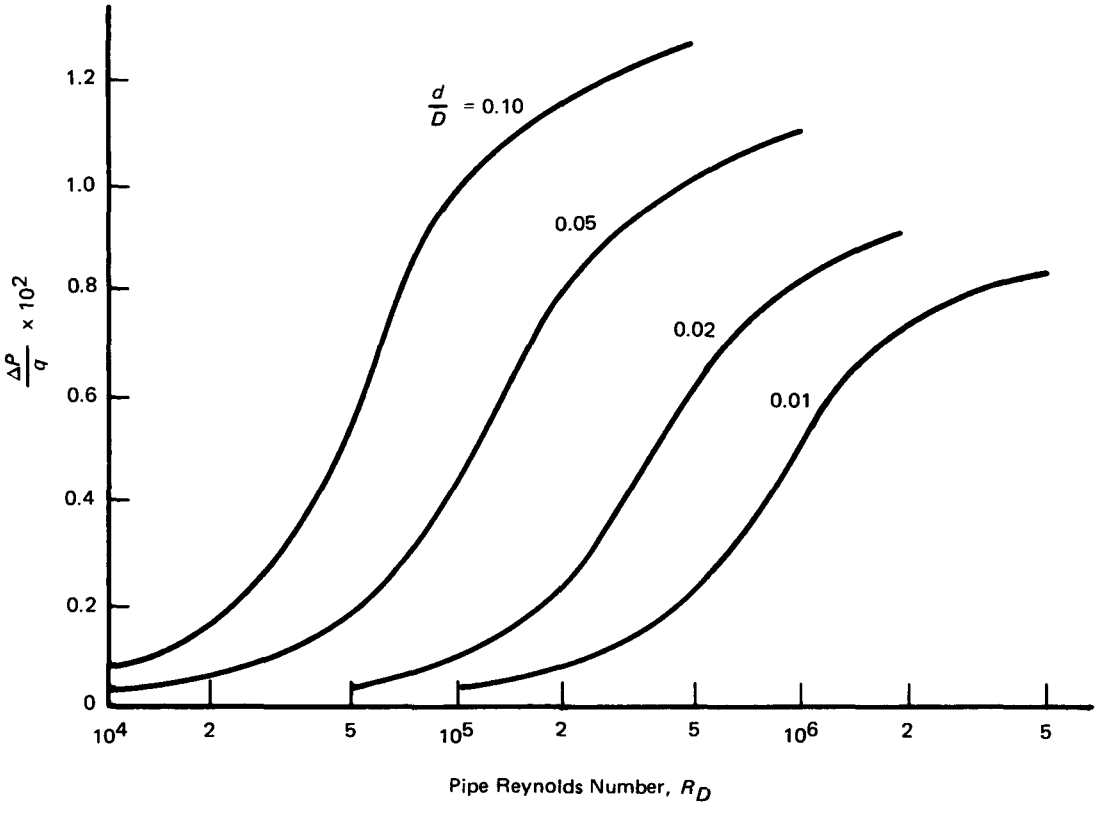

FIG. 4.3 ERRORS FOR DIFFERENT SIZE TAPS IN FULLY DEVELOPED PIPE FLOW

Copyright ASME International
Provided by IHS under license with ASME
No reproduction or networking permitted without license from IHS
Not for Resale

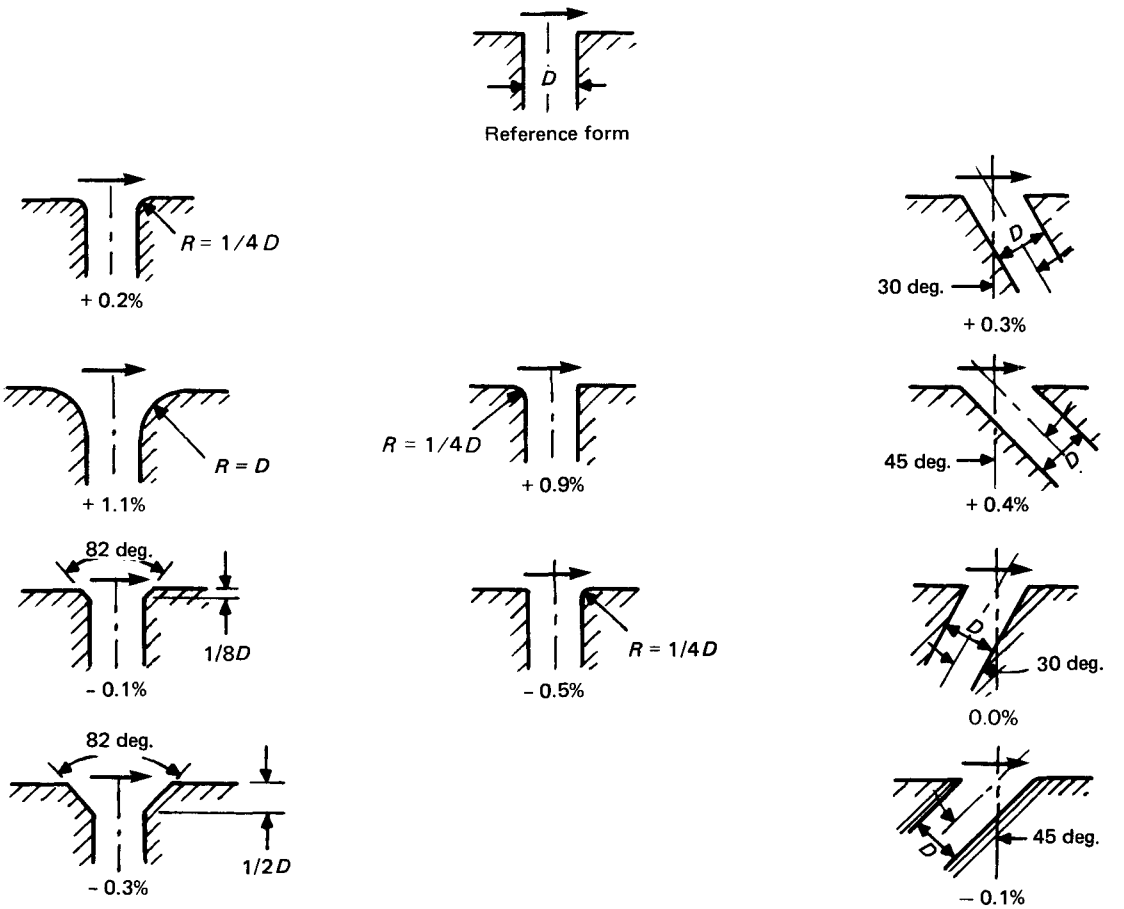

FIG. 4.4 RELATIVE TAP ERRORS AS PERCENT OF DYNAMIC PRESSURE

Copyright ASME International
Provided by IHS under license with ASME
No reproduction or networking permitted without license from IHS
Not for Resale

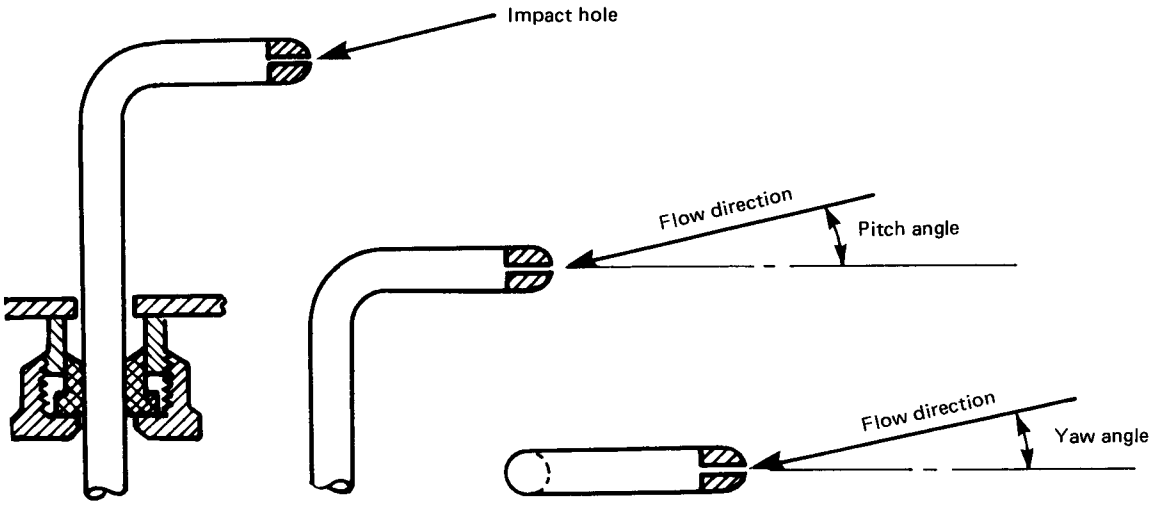

FIG. 4.5 IMPACT TUBE

Copyright ASME International
Provided by IHS under license with ASME
No reproduction or networking permitted without license from IHS
Not for Resale

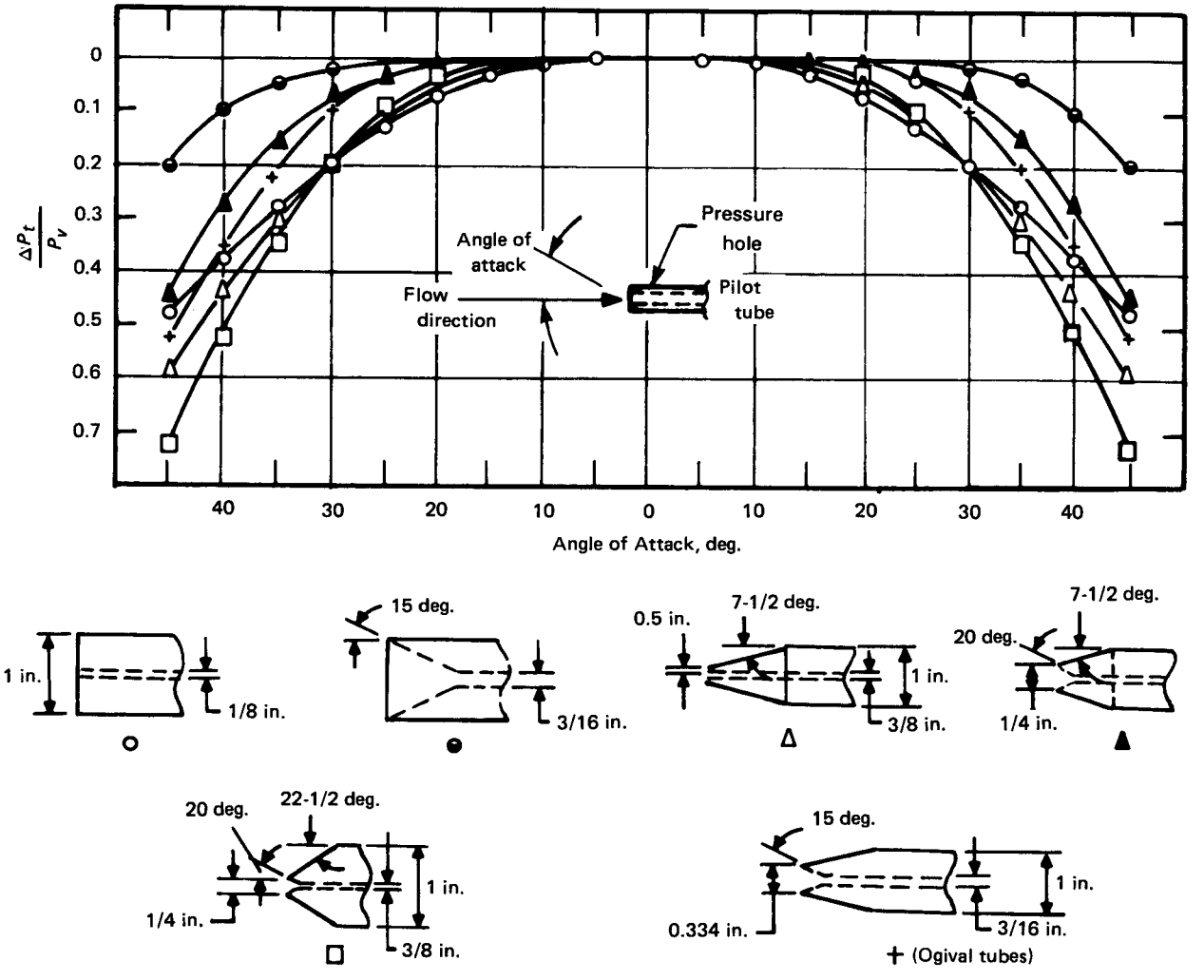

FIG. 4.6 VARIATION OF TOTAL PRESSURE INDICATION WITH ANGLE OF ATTACK AND GEOMETRY FOR PITOT TUBES (AFTER NACA TN 2331, APRIL 1951)

Copyright ASME International
Provided by IHS under license with ASME
No reproduction or networking permitted without license from IHS
Not for Resale

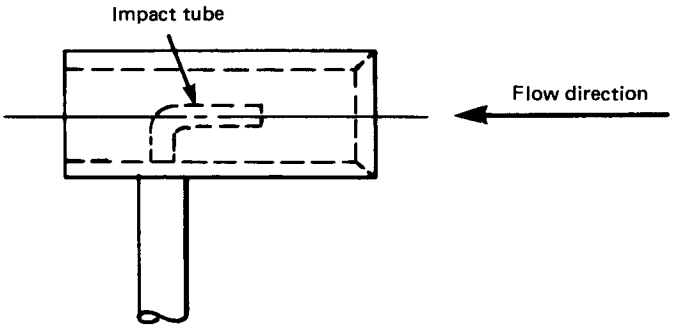

FIG. 4.7 KIEL PROBE

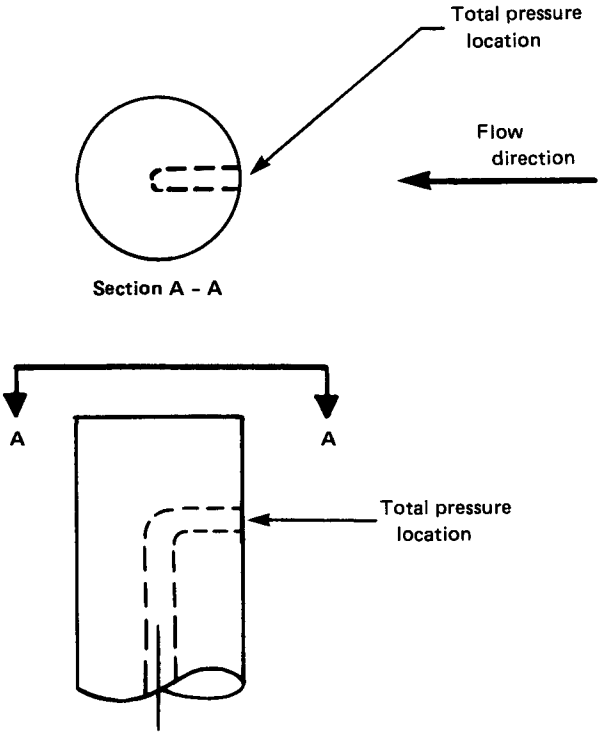

FIG. 4.8 TOTAL PRESSURE LOCATION ON A CYLINDER IN A FLOW FIELD

Copyright ASME International
Provided by IHS under license with ASME
No reproduction or networking permitted without license from IHS
Not for Resale

direction (as used on sphere, cylinder, wedge, and cone-type probes).

4.2.2.1 Static Tube. A static tube, similar to an impact tube, is used to determine the static pressure in a fluid stream (see Fig. 4.9). The accuracy of static-pressure measurement with a static tube depends mainly on the location of the sensing taps. The nose of the probe tends to accelerate the flow which lowers the tap pressure, while the stem tends to stagnate the flow raising the static pressure. Both effects should be compensated for when constructing this type of probe. Calibration of the static tube is necessary before use. The static tube can be combined with an impact tube to give a Pitot-static tube which samples both the static and total pressure (see Fig. 4.10).

4.2.2.2 Aerodynamic Probes. Accuracy of static-pressure measurement using static-pressure taps in aerodynamic probes depends on the tap location, tap size, Mach number, and direction and change of direction of the flow field [28, 29]. Many probe configurations fall under the general title of "aerodynamic probes." Among these are the spherical, cylindrical, wedge, and cone-type probes. To exemplify their principle of operation, consider the cylindrical probe, sometimes referred to as a Fechheimer probe, in a flow field as shown in Fig. 4.11. Two taps are located on the cylinder in a plane perpendicular to the cylinder's center line but separated by a certain angle. Calibration of the cylindrical probe depends on the tap location with respect to the flow direction. As the probe is rotated in a flow field, an orientation can be obtained where the pressures sensed at both taps are equal. This can be done, for example, by connecting the taps to opposite legs of a manometer. The pressure sensed at these taps can then be determined and calibrated with respect to static pressure. In this way, a probe that senses static pressure and two-dimensional flow direction can be obtained.

Using the same principle as described above, static pressure can be measured by wedge-type probes which similarly give a two-dimensional flow direction (see Fig. 4.12).

Three-dimensional flow directions can be determined using five-hole spherical and cone-type probes (see Fig. 4.13). These probes use the same principle but in two perpendicular planes. Therefore, a static pressure-balance between two holes in each of the two perpendicular planes is required. A yaw-and-pitch angle is then determined.

4.2.2.3 Basket Probes. A static-pressure measurement can be quite cumbersome using an aerodynamic probe, and it is often not feasible. If only the static pressure is of interest, a basket probe can be used. This probe measures the static pressure independent of the flow direction for low-to-moderate fluid velocities. An example of this probe is shown in Fig. 4.14 [30]. The basket probe is particularly useful for static pressure measurements in the condenser of a steam turbine where the flow direction is not well defined. Another type of basket probe is shown in Fig. 4.15 [31]. This version of the probe has a pressure transducer located in the probe head itself to avoid the buildup of water legs.

4.2.2.4 Probe Blockage Effects. Standard pressure probes such as cylinders and spheres are commonly used to measure total and static pressures as part of performance tests of flow elements. It is usually assumed that the probe's presence in the flow field does not change the characteristics of the flow. If the probe is small compared to the flow area, its effect on the flow is usually small and can be neglected. However, larger probes will noticeably influence the flow characteristics such that the measurements will no longer indicate the correct flow parameters. This phenomenon is generally referred to as the "probe blockage" effect.

The blockage effect can be looked upon as a perturbation of the velocity in the vicinity of the probe. These perturbations are important both when the probe is calibrated and when it is used to make pressure measurements. If the significant blockage is due to the probe stem, Figs. 4.16 and 4.17 can be used to estimate the magnitude of the probe blockage effect [32]. These figures are based on a cylinder of diameter d immersed midway into the circular free-jet or pipe of diameter D. Note that in a free-jet, the effect of blockage is to increase the static pressure while in a pipe, the opposite is true.

4.3 CONNECTING PIPING

In evaluating a pressure measurement, it is necessary to know the density of the fluid in the connecting piping. If this fluid is supposed to be gas, then there must be no possibility of collecting or trapping liquid in the connecting piping. On the other hand, if the piping is supposed to be filled with liquid, then trapping of gas pockets should be avoided. These precautions are particularly necessary at lower pressures.

For pressures which are below atmospheric pressure, the connecting piping should contain a means for bleeding air or suitable gas near the pressure-measurement device. A very small rate of gas flow may

Copyright ASME International
Provided by IHS under license with ASME
No reproduction or networking permitted without license from IHS
Not for Resale

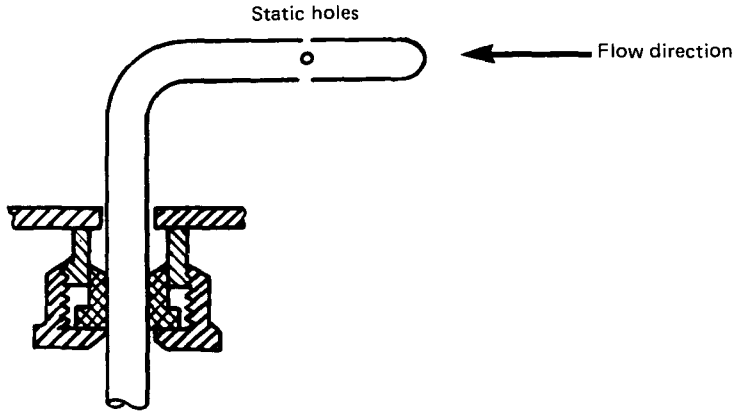

FIG. 4.9 STATIC TUBE

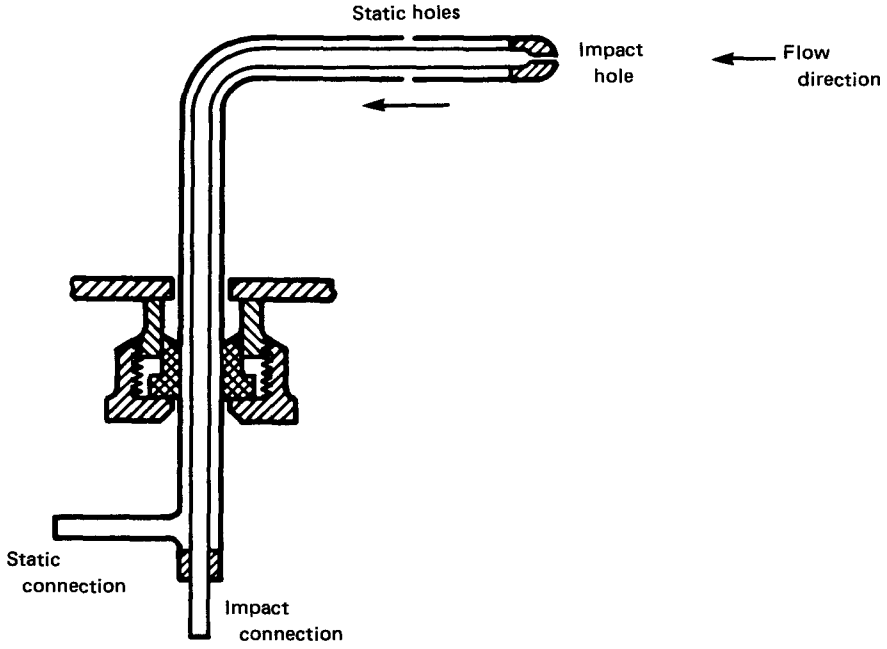

FIG. 4.10 PITOT-STATIC TUBE

Copyright ASME International
Provided by IHS under license with ASME
No reproduction or networking permitted without license from IHS Not for Resale

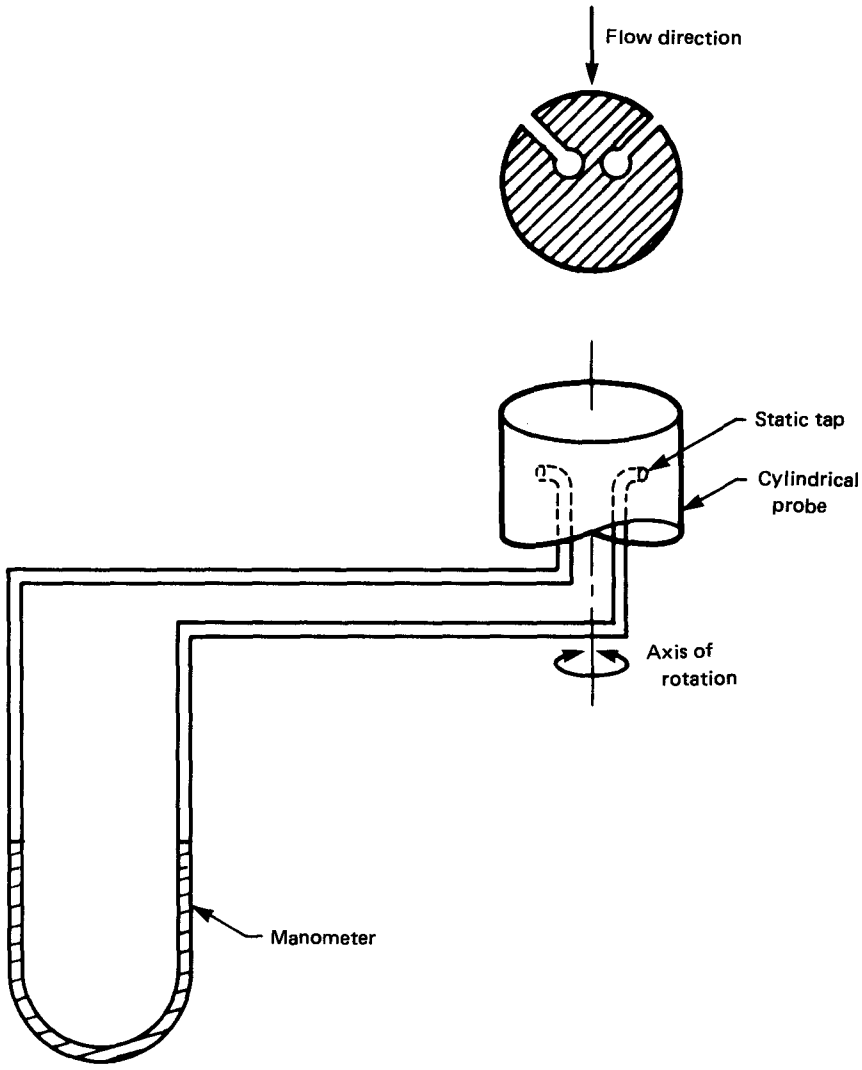

FIG. 4.11 CYLINDRICAL PROBE, PRINCIPLE OF OPERATION

Copyright ASME International
Provided by IHS under license with ASME
No reproduction or networking permitted without license from IHS
Not for Resale

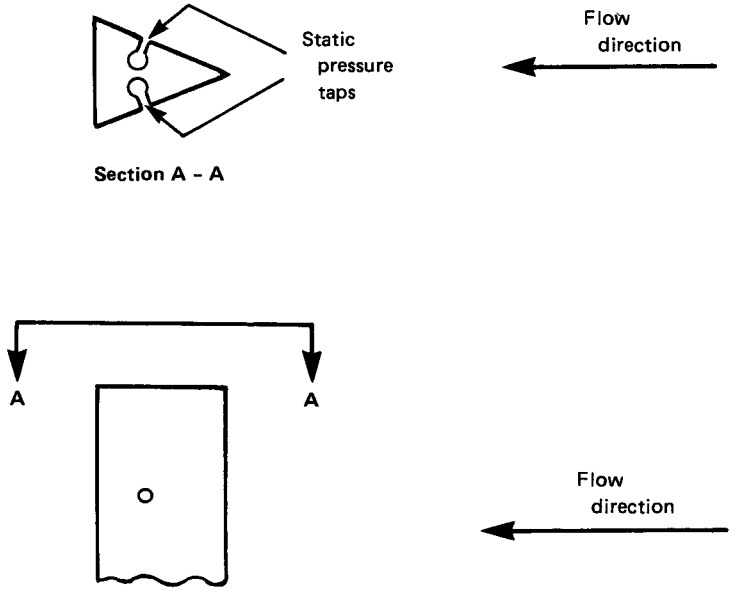

FIG. 4.12 WEDGE-TYPE PROBE

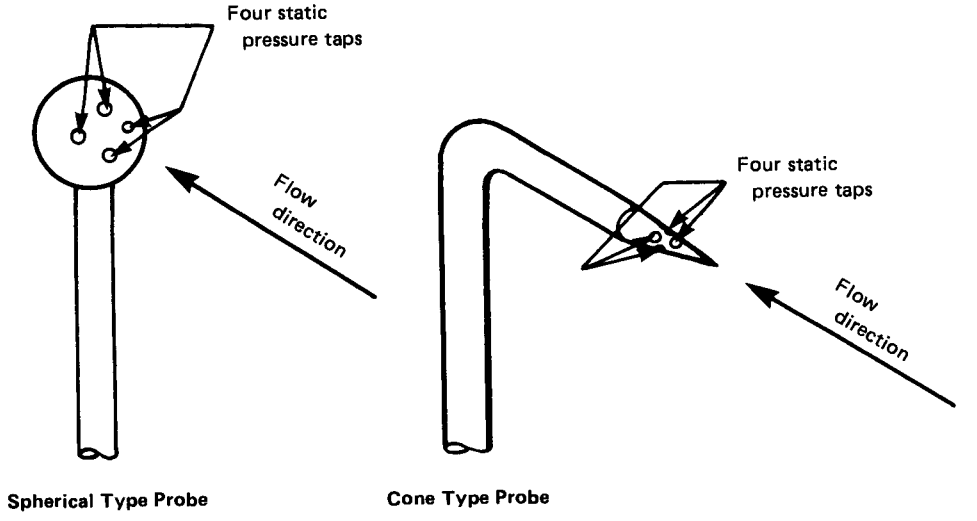

FIG. 4.13 SPHERICAL AND CONE TYPE PROBES

Copyright ASME International
Provided by IHS under license with ASME
No reproduction or networking permitted without license from IHS
Not for Resale

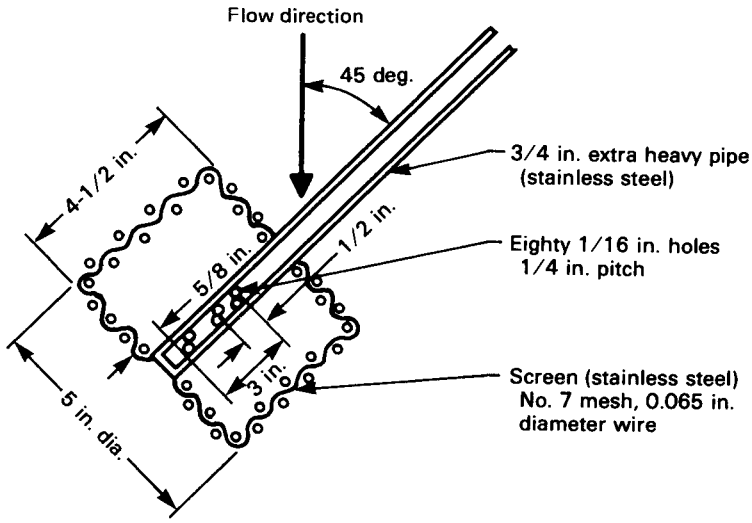

FIG. 4.14 BASKET PROBE

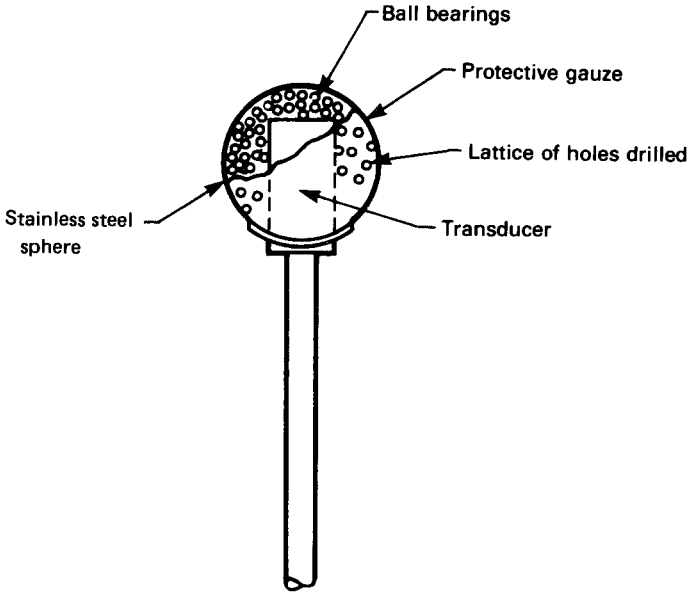

FIG. 4.15 BASKET PROBE WITH A PRESSURE TRANSDUCER

Copyright ASME International
Provided by IHS under license with ASME
No reproduction or networking permitted without license from IHS
Not for Resale

be metered for purging except when readings are being made. Such purging may be used for any higher-pressure connections for which a suitable uniform source of air or other suitable gas under pressure is available.

Liquid-filled piping should slope upward continuously from the instrument to the tap. If this is not possible, the high points must be vented, to eliminate gas pockets, before reading the instrument. Gas-filled piping should slope downward continuously from the instrument to the tap to automatically drain any liquid. If this is not possible, the low points must be drained, before reading the instrument. See Fig. 4.18.

A valved cross-connection between the two pipes of a differential pressure meter is a frequent source of error. A leak through the cross-connection reduces the differential. Caution should be used with such an arrangement. An alternate arrangement involves the cross-connection to include two valves, with a drain valve between, as a telltale for leakage detection, as shown in Fig. 4.19.

4.3.1 Transient Pressure Measurement. Measurement of transient and average pressure in a flowing stream may be required in many test and monitoring applications. The best way to make such a measurement would be to place the sensing transducer right at the sensing location. However, many test configurations will not allow such a test setup. In these cases, tubing will be required to connect the sensing location to the sensing transducer. In such cases the frequency response of the tubing must be considered so that the influence on the test results is known.

In setting up connecting tubing one should avoid configurations that will cause wave reflections and hence system resonances. Sharp bends, sudden expansions, and sudden contractions of the connecting tube should be avoided.

The task of calculating the system resonances of a tubing system can be quite complicated and involved. Refer to Refs. [33] through [39] for guidelines in performing such a calculation.

An example of a resonant-frequency calculation of a relatively simple connecting tubing configuration will be considered (see Fig. 4.20).

The equation stated below gives an adequate approximation of the resonant frequency f using the quarter-wavelength equation with an end correction [33].

$$f = c/\left[4\left(L + \frac{8D}{3}\right)\right]$$

where

c = velocity of sound
D = tube inside diameter
L = tube length

The above equation assumes no damping as is the case in most short-tube configurations. This equation predicts frequencies 2% to 5% above those found by more rigorous analyses. Higher-order resonant frequencies can be calculated with more involved calculations.

4.4 DIAPHRAGM SEALS

Direct pressure measurement, using connecting lines to a gage or a transmitter, is sometimes hampered by the nature of the process fluid. The process fluid may be highly viscous, corrosive, contain slurries that could plug the interior of an instrument or tend to solidify, as in high-pressure polymer extruders.

In the food and dairy industry, ease of cleaning is a concern. Crevices or pockets in the instrumentation must be avoided, for they trap materials that support the growth of bacteria. Standard construction materials are often not acceptable.

Diaphragm seals isolate the process fluid from the measuring element while communicating the pressure signal through connecting liquid-filled capillary tubing. The seal is normally a very flexible membrane, such as an elastomer or thin metallic diaphragm capable of transmitting the process-fluid pressure with minimum pressure drop to the liquid inside the capillary. The liquid, in turn, pressurizes the measuring element. There are no lines that require either draining or purging or require special precautions to keep vertical runs completely full or empty of process fluid.

Some applications of diaphragm seals are illustrated in Figs. 4.21, 4.22, and 4.23.

Seal elements are available for flush mounting to pipe flanges or chemical tees, welding to pipe, or extending into the process. Only the seal membrane and trim come into contact with the process.

Several precautions and choices are involved in the use of seals. They involve size, pressure, temperature, filling liquid, capillary length and design, welded or bolted construction, quality of fill, and elevation relative to the measuring element. Careful engineering is required, but when done, some bothersome measurement problems will be solved, and the system reliability will be extremely high.

4.4.1 Size. A seal membrane must be capable of transferring the required volume of liquid to actuate the

Copyright ASME International
Provided by IHS under license with ASME
No reproduction or networking permitted without license from IHS
Not for Resale

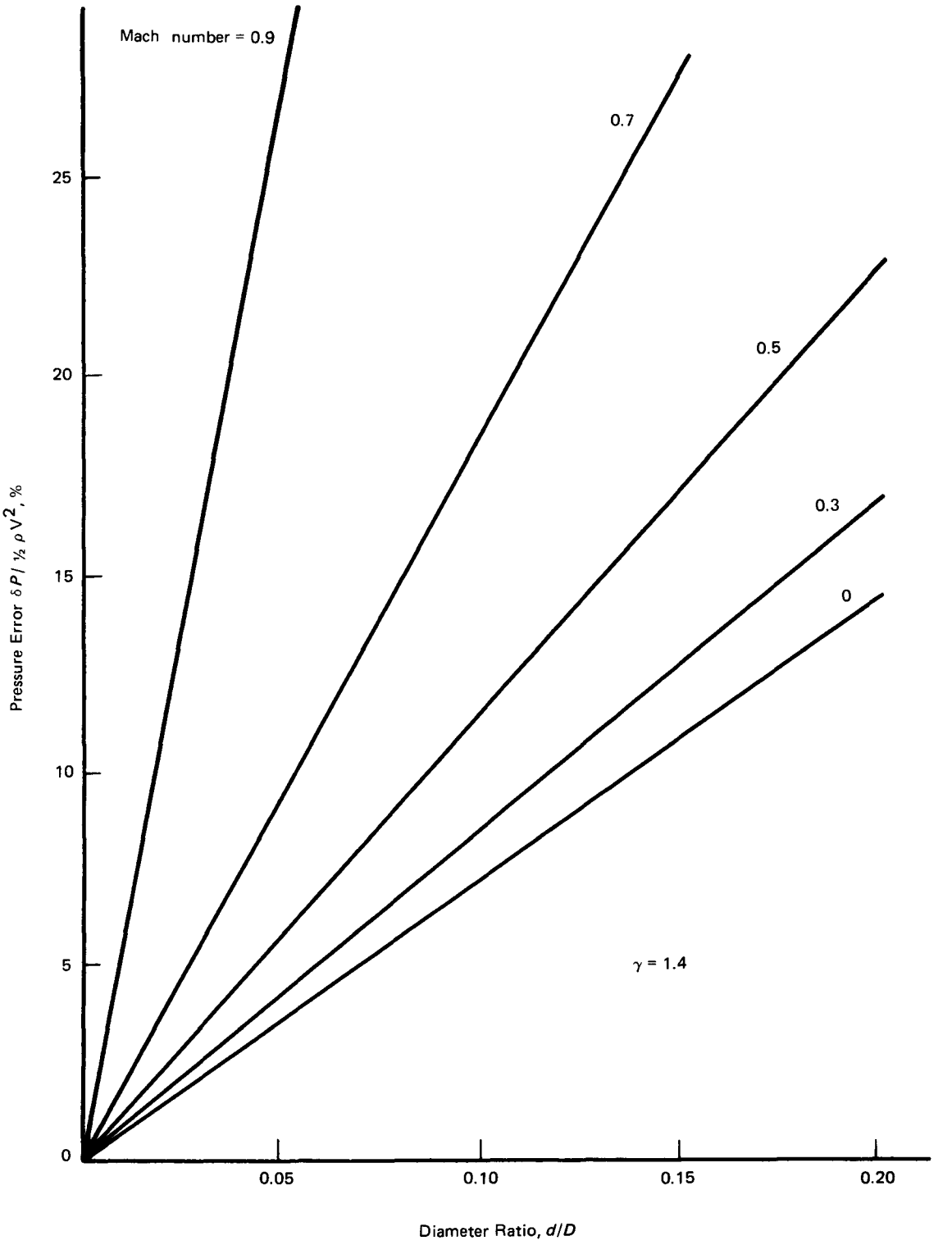

FIG. 4.16 MAGNITUDE OF PROBE-BLOCKAGE EFFECTS

Copyright ASME International
Provided by IHS under license with ASME
No reproduction or networking permitted without license from IHS
Not for Resale

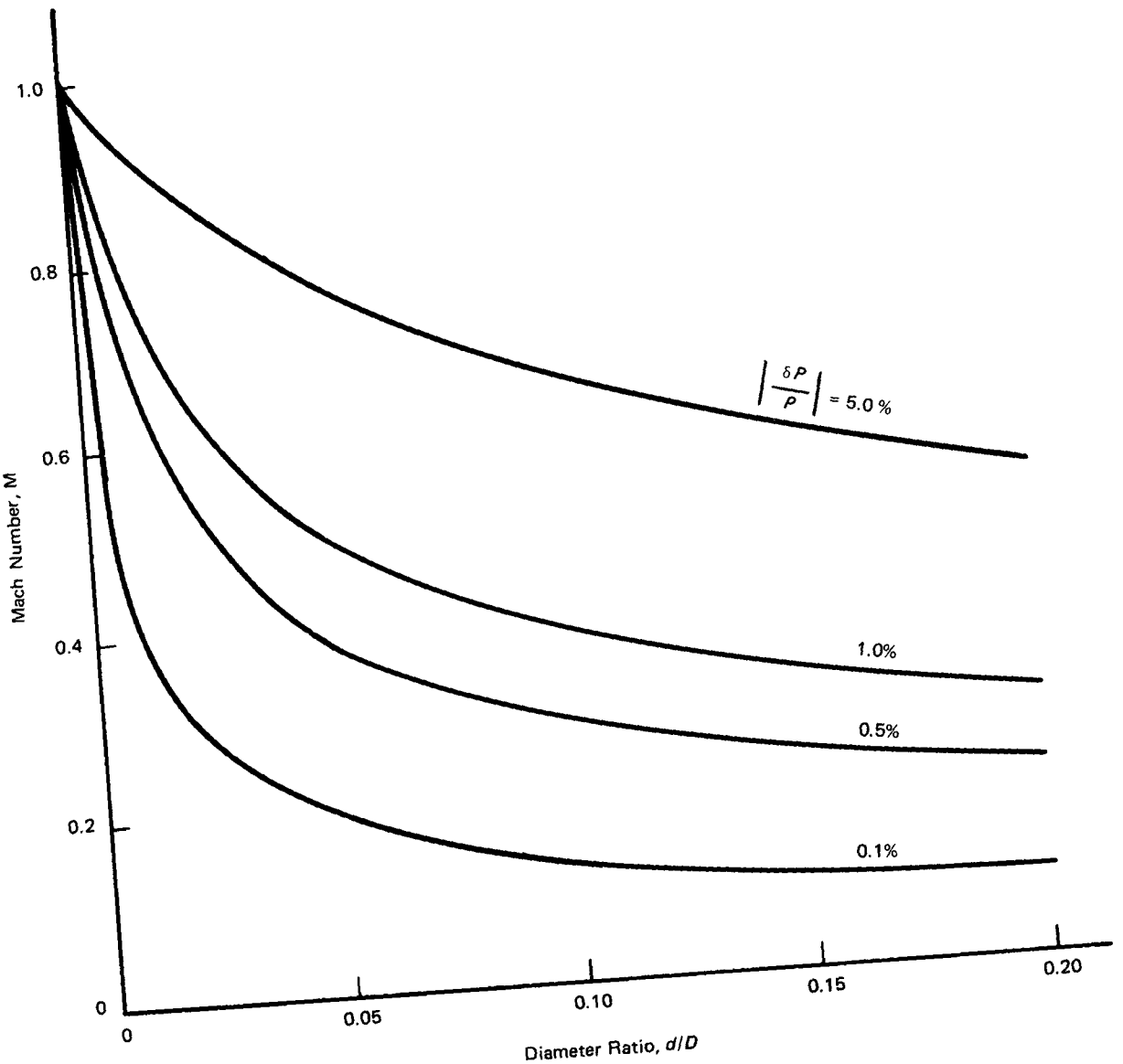

FIG. 4.17 MAGNITUDE OF PROBE-BLOCKAGE EFFECTS

Copyright ASME International
Provided by IHS under license with ASME
No reproduction or networking permitted without license from IHS
Not for Resale

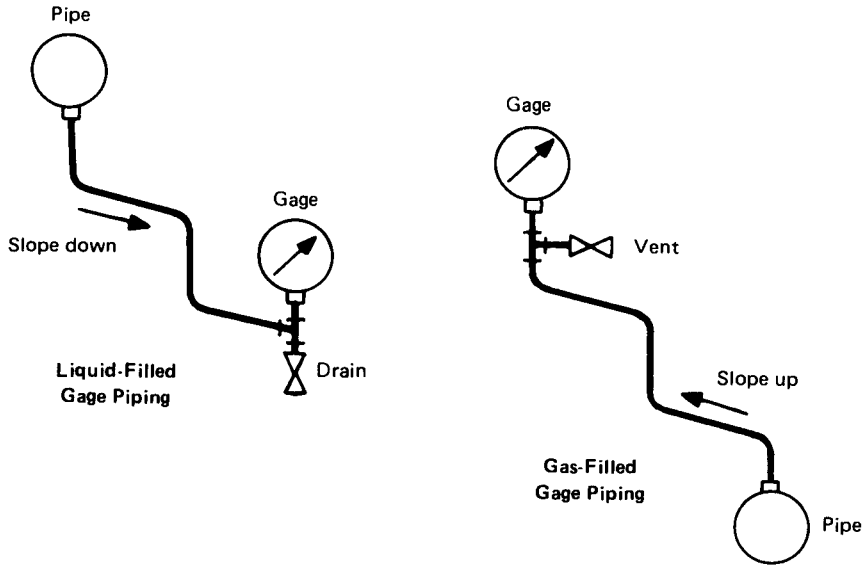

FIG. 4.18 TYPICAL PRESSURE GAGE PIPING ARRANGEMENT

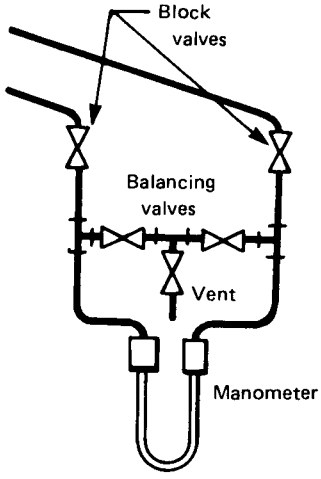

FIG. 4.19 DIFFERENTIAL PRESSURE CROSS CONNECTION

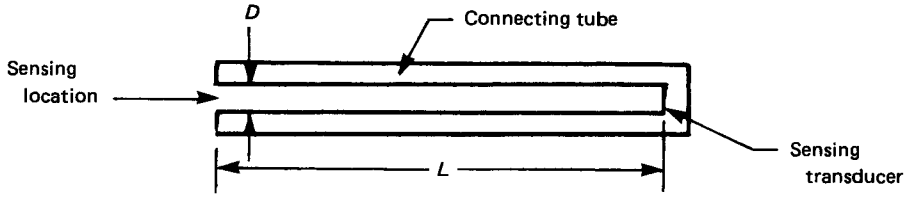

FIG. 4.20 TUBE CONFIGURATION USED IN FREQUENCY CALCULATION

Copyright ASME International
Provided by IHS under license with ASME
No reproduction or networking permitted without license from IHS
Not for Resale

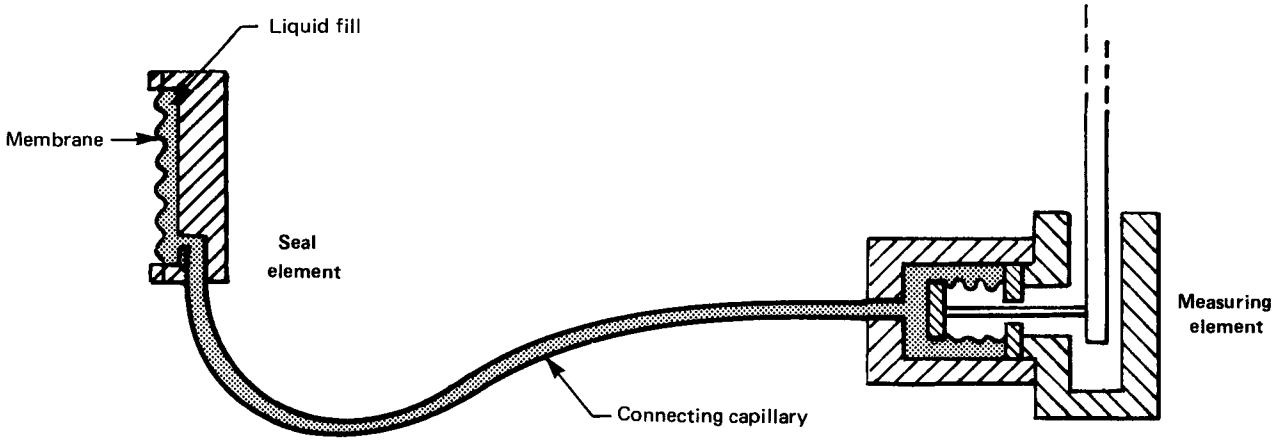

FIG. 4.21 REMOTE SEAL WITH MEASURING ELEMENT FOR A GAGE PRESSURE TRANSMITTER
(Courtesy of Taylor Instrument Company)

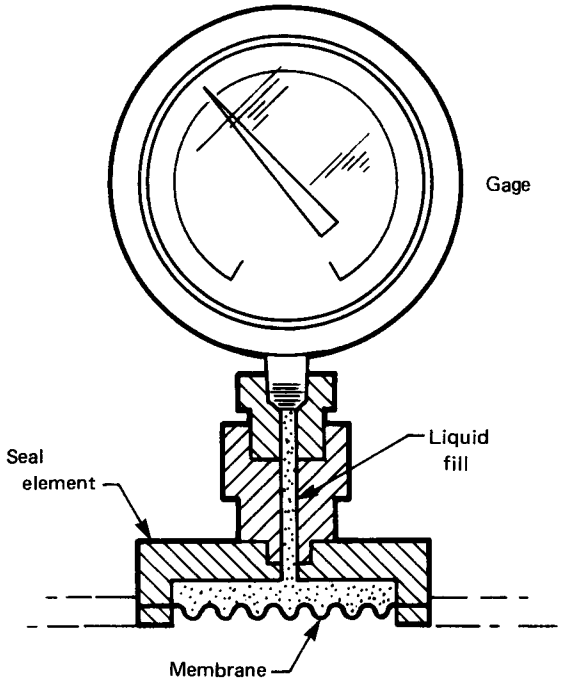

FIG. 4.22 REMOTE SEAL WITH A PRESSURE GAGE
(Courtesy of Taylor Instrument Company)

Copyright ASME International
Provided by IHS under license with ASME
No reproduction or networking permitted without license from IHS
Not for Resale

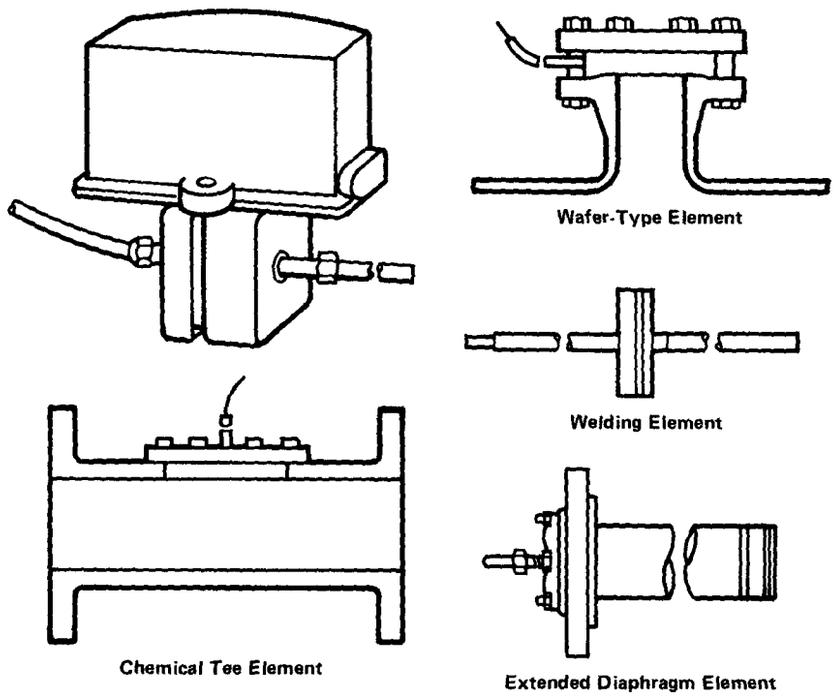

FIG. 4.23 REMOTE SEALS FOR USE WITH A DIFFERENTIAL PRESSURE TRANSMITTER
(Courtesy of Taylor Instrument Company)

Copyright ASME International
Provided by IHS under license with ASME
No reproduction or networking permitted without license from IHS Not for Resale

measuring element through its full range. The seal membrane must also be able to accommodate changes in volume that result from thermal expansion or contraction of the filling liquid.

It should be kept in mind that any pressure change across the seal that is caused by expansion or contraction of the fill fluid due to ambient or process-temperature changes represents an error in the measurement. A perfect seal membrane would be like a soap bubble in that it could accommodate volumetric changes in the system-filling liquid without significantly changing the pressure of the liquid. While a small-diameter seal diaphragm may be a convenience, a larger one may perform better. Also, the lower the pressure span, the larger the seal required for satisfactory temperature performance.

Diameter alone, however, can be misleading. Corrugation design, material, and thickness are equally as important. The performance of a seal is best described by a volume-displacement-versus-pressure plot. The slope of this plot is "capacitance" (volume change/pressure change). Its value should be as high as possible over the range of volume displacement required by the measuring element. If there are discontinuities in the curve, this is an indication of "oil-canning," and a seal with such a malfunction could cause large errors in the measurement.

4.4.2 Filling Liquid. Selection of a filling liquid should take into account its coefficient of thermal expansion, compressibility, viscosity (including constancy of viscosity over the working temperature range, since that affects response time), its freezing and boiling points, tendencies to decompose at the maximum operating temperature, compatibility with the materials of the measuring element and seal system, and its vapor pressure if it is to be used in a vacuum application. Density can also be important if the seal is to be located at a different elevation from the measuring element (see para. 4.4.6) or if there is danger that the liquid mass could cause mechanical shock forces during handling or an excessive static head that would damage the seal by overstressing. It should also be a safe material in contact with the process in case of seal rupture. This is particularly important with sanitary seals in the food and dairy industry and with certain chemical applications where an incompatible filling fluid can even cause explosions (e.g., silicone and chlorine).

4.4.3 Capillary. Capillary length is often dictated by the application, but when there is a choice, length should be kept to a minimum. With length established, the volume-transfer requirement, viscosity of the filling liquid, and capillary bore size determine the response time. The capillary bore diameter should be the smallest practical size that will still give a satisfactory response time. This will provide the least sensitivity to ambient temperature changes.

With some filling fluids such as mercury, temperature compensation of the capillary can be obtained using low or zero-expansion filler wire inside the capillary bore.

4.4.4 Welded or Bolted Construction. Several manufacturers offer seals designed to bolt onto most existing measuring elements which have suitably small volume-transfer requirements. They usually provide a means of adding the liquid fill. Their advantages include the ability to modify existing measuring equipment for more demanding applications and the ability to make repairs in the field.

Hermetically sealed, all-welded systems, however, are less susceptible to leakage and require no maintenance. They are particularly suited to vacuum applications in which bolted constructions would be subject to long-term migration of air across nonmetallic parts.

4.4.5 Quality of Fill. System filling is extremely important. It must be free from air pockets that contract and expand with changes of temperature or applied pressure. A vacuum fill is recommended for optimum performance. When the system is to be used at temperatures below the filling temperature or for vacuum service, additional "tensioning" fill must be added to keep the seal from hitting the overrange stop or the filling-liquid pressure from dropping below its vapor pressure. No leakage can be tolerated, because this would result in drift of the measurement and ultimate failure of the system. Gasketed or threaded joints should be avoided.

4.4.6 Elevation. Diaphragm-seal systems are subject to static-head effects when the measuring element and seal are mounted at different elevations. For a particular temperature, the static head can be corrected by the user during installation. This involves re-zeroing the measuring element.

Installing a seal at an elevation lower than the measuring element is quite risky unless the seal element has been specially designed to support the increased head of filling liquid that will be acting outward. This risk is even greater when vacuum measurements are involved.

Copyright ASME International
Provided by IHS under license with ASME
No reproduction or networking permitted without license from IHS
Not for Resale

When seals are installed either above or below the measuring element, it is also necessary to be aware of the effect of changing density of the filling liquid caused by ambient temperature change. This effect is different from the volumetric temperature effect and is normally not compensated for by the instrument manufacturer. Thermostatically-controlled heat tracing or vertical capillary runs may be warranted on outdoor installations where high accuracy is required. The density variation effect can be calculated as follows.

$$E = \frac{\alpha\,(G_f)\,L\,(\Delta\,T)\,(100)}{S}$$

where

E = effect of filling-fluid density change with temperature in percent of instrument span
α = coefficient of expansion of filling fluid at mean temperature
G_f = specific gravity of filling fluid at mean temperature
L = elevation of seal element relative to instrument body (or relative to the other seal element on instruments with two remote seals)
ΔT = ambient temperature change
S = instrument span

4.5 INSTALLATION EFFECTS

Most pressure indicators are located remote from the pressure sensor, often at a different elevation. This difference in height introduces a bias in the pressure measurement for which there must be a correction factor introduced. A typical setup is shown in Fig. 4.24.

The pressure at the transducer will be less than that at the center line of the pipe by the amount γh, where γ is the specific weight of the fluid in the vertical leg, and h is the vertical height from the center line of the pipe to the center of pressure of the transducer. Normally this bias is small for gases and can be neglected unless very accurate measurements are required.

To apply this correction requires a knowledge of the specific weight of the fluid in the vertical leg. If the fluid is at a high temperature relative to the surroundings, then there will be a temperature gradient in the vertical leg due to heat transfer. Since the specific weight of any fluid is a function of the fluid's temperature, there would then be a variation in the specific weight in the vertical leg. Estimating the effective specific weight would be difficult if not impossible. This problem can be avoided by running the connecting tubing horizontally for a short distance until the fluid has reached the temperature of the surroundings, and then making the required vertical run.

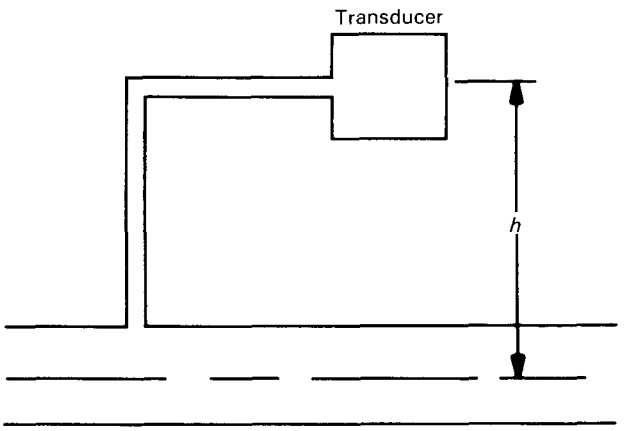

FIG. 4.24 TRANSDUCER SETUP

Estimating the required length of horizontal run can be done quite easily and reliably with an equation derived from one-dimensional heat transfer [40].

$$\frac{T}{T_o} = \exp\left[-\sqrt{\frac{K_s}{K_2}\,\frac{N_u}{(1-\beta^2)}}\;\frac{x}{b}\right] \qquad (4\text{-}1)$$

where

T = temperature of the fluid in the tubing a distance x from the sensor
T_o = temperature of the fluid at the pressure sensor/tap
K_s = thermal conductivity of surroundings
K_2 = thermal conductivity of tubing material
b = tubing outer radius
x = length of tubing
β = ratio of inner to outer tubing radii
N_u = Nusselt number

Here all temperatures have been referenced to a surrounding temperature of zero. A correlation for the free convection from a horizontal tube has been given as [41]:

$$N_u = 0.53\,(G_r P_r)^{1/4}$$

where G_r is the Grashof number and P_r is the Prandtl number of the surrounding fluid. Using the Nusselt number for free convection will ensure an ample length of tubing for all conditions. A comparison of the calculations for 200°C (392°F) water in 1.27 cm (½ in.) tubes of stainless steel and steel is shown in Fig. 4.25.

Copyright ASME International
Provided by IHS under license with ASME
No reproduction or networking permitted without license from IHS
Not for Resale

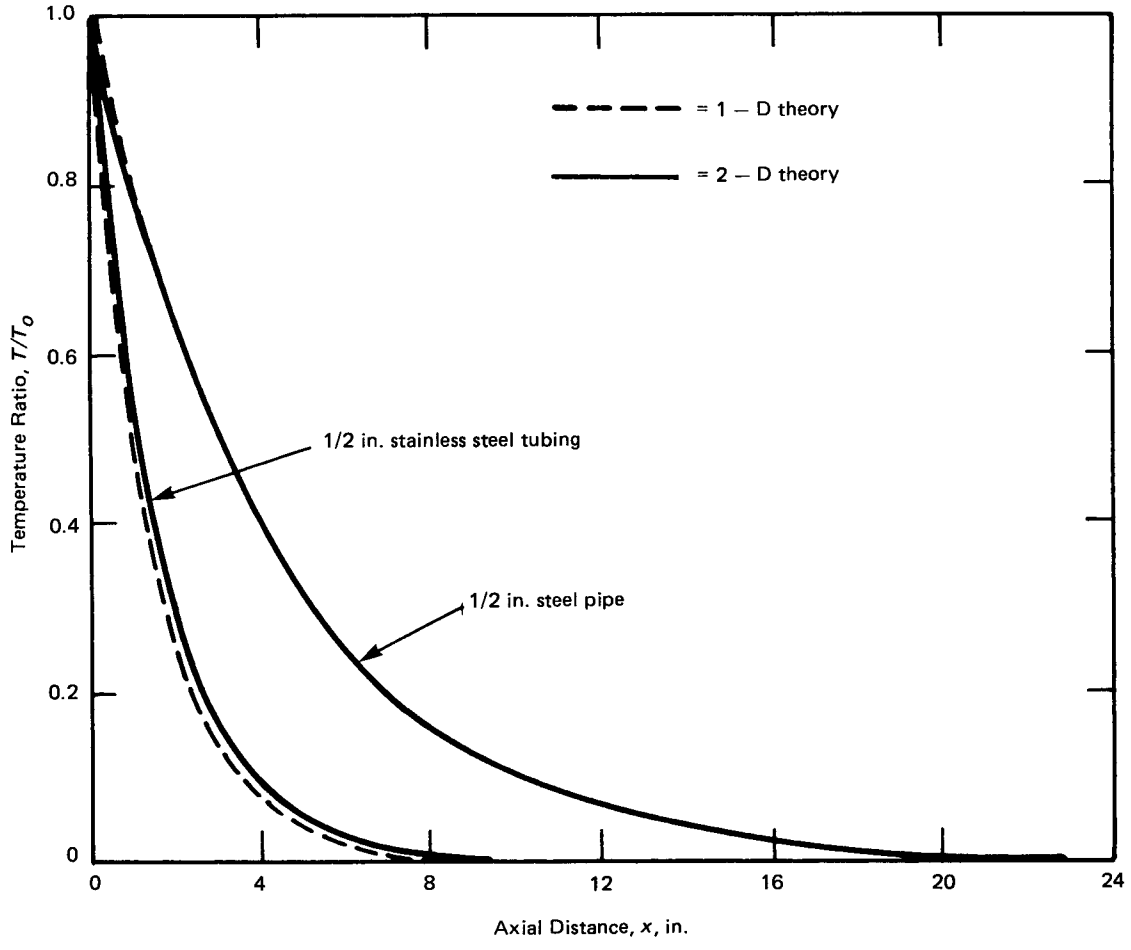

GENERAL NOTE: 1 in. = 25.4 mm

FIG. 4.25 TEMPERATURE DISTRIBUTIONS IN CONNECTING TUBING

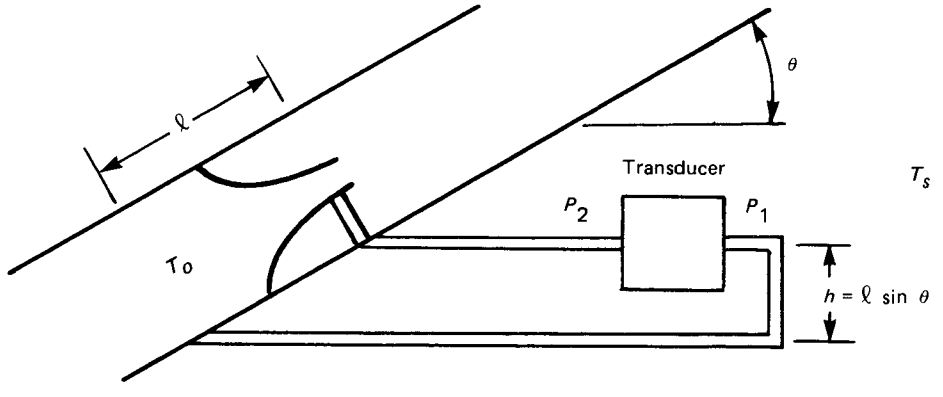

FIG. 4.26 FLOW MEASUREMENT TRANSDUCER APPLICATION

Copyright ASME International
Provided by IHS under license with ASME
No reproduction or networking permitted without license from IHS
Not for Resale

Also shown for comparison with Eq. (4.1) are the two-dimensional calculations. The two calculations agree so well because the ratio of the thermal conductivities of the water and the tubing material is small, 0.04 and 0.02 for stainless steel and steel, respectively. The calculations indicate that approximately 30 cm (1 ft) and 60 cm (2 ft) of horizontal tubing are required for the fluid to attain essentially the temperature of the surroundings. The parameters of this example are typical of those encountered in flow measurements of hot condensate from a large steam turbine.

The subject of flow measurement has an interesting application of these ideas because while a difference between two pressures is measured, the two pressure sensors are sometimes located at different elevations. Figure 4.26 shows such an application.

If it is assumed that the temperature of the fluid in the pipe is uniform at T_o and that the horizontal legs of the connecting tubing are adequate to ensure that the vertical leg is at the temperature of the surroundings T_s (different from T_o), then there will be a pressure difference between ports 1 and 2 of the transducer when there is no flow across the fluid meter. The amount of this pressure difference is given by

$$P_1 - P_2 = [\gamma(T_o) - \gamma(T_s)]h$$

merely the difference in the specific weights γ of the fluid evaluated at the two temperatures, times the vertical distance between the tubing connections. This pressure difference is a bias which must be subtracted from all ΔP measurements across the fluid meter.

4.6 UNCERTAINTIES IN PRESSURE MEASUREMENT

All measurements, including pressure, have errors associated with them. Error is the difference between a measured value and the true value. This difference cannot be known, but an estimate of its probable magnitude can be made. The estimate is usually referred to as the "measurement uncertainty." The uncertainty of a measurement is composed of two types of errors: random errors and bias errors. Random errors are variable from measurement to measurement and are characterized by words like precision or repeatability.

Bias errors are fixed errors which do not vary from measurement to measurement. It is the bias type of error which is reduced during calibration of an instrument. A detailed procedure for treating the measurement errors will not be given here, but the reader is referred to ASME/ANSI PTC 19.1 on Measurement Uncertainty which treats this subject thoroughly. The present intent is to make the reader aware of the fact that there are various sources of measurement uncertainty.

4.6.1 Error Propagation. Any measurement is the final step in a series of steps, a measurement chain. At the beginning of the chain is the National Bureau of Standards to which all important engineering measurements must be traceable. Each link in the chain adds to the final uncertainty of the measurement. Starting with the NBS reference, which might be a deadweight tester, for example, there is a small uncertainty contribution to calibration of the transfer standard. The transfer standard has an uncertainty as does the working standard that is actually used to calibrate the pressure measurement system used. Finally, the calibrated system itself will have some uncertainty associated with it. It is usually the case that the contribution of each link increases with the smallest contribution from the NBS reference and the largest from the calibrated system.

The measurement chain, as described, ends with the instrument being calibrated in ideal laboratory conditions (see Fig. 2.1). To obtain uncertainty values for actual pressure measurements, other variables such as installation effects, environmental effects, time variation, and spatial variations of the pressure being measured must be considered. Installation effects are described in Section 4, while the reader is referred to manufacturers' literature for environmental effects on specific instruments, and to ASME/ANSI PTC 19.1 for a discussion of temporal and spatial-variation effects.

Copyright ASME International
Provided by IHS under license with ASME
No reproduction or networking permitted without license from IHS
Not for Resale

SECTION 5 — REFERENCES

[1] Reynolds, W. C., *Thermodynamics*, Second Edition, New York: McGraw-Hill, 1968, pp. 67–69, 168–171, 226–227.

[2] "ASME Orientation and Guide for Use of SI (Metric) Units," ASME Guide SI-1, Eighth Edition, 1978.

[3] ASTM "Metric Practice Guide," ASTM Guide E380-72, June 1972.

[4] Murdock, J. W., editor, PTC 2-1971, "Definitions and Values," New York: ASME, 1971.

[5] Hewitt, G. F., "The Role of Experiments in Two-Phase Systems with Particular Reference to Measurement Techniques," *Progress in Heat and Mass Transfer*, Vol. 6, Oxford: Pergamon Press, 1972, pp. 213–240.

[6] Heydemann, P. L. M., and Welch, B. E., *Experimental Thermodynamics*, B. LeNeindre and B. Vodar, editors, Butterworth and Co., Ltd., 1975.

[7] Johnson, D. P., et al., *Industr Eng Chem. 49,* 2046 (1957).

[8] Lewis, S., and Peggs, G. N., *The Pressure Balance: A Practical Guide To Its Use*, National Physical Laboratory, United Kingdom, 1979.

[9] Dadson, R. S., Lewis, S. L., and Peggs, G. N., *The Pressure Balance: Its Theory and Practice*, Her Majesty's Stationary Office, London, England, 1982.

[10] "Pressure Gauge Handbook," New York: Marcel Dekker Inc., 1985.

[11] ANSI/ASME B40.1-1985, Gauges — Pressure Indicating Dial Type — Elastic Element, New York: ASME, 1985.

[12] Newell, F. B., "Diaphragm Characteristics, Design and Terminology," New York: ASME, 1958

[13] Lion, K. S., "Instrumentation in Scientific Research," First Edition, New York: McGraw-Hill, 1959, p.44.

[14] ASME Fluid Meters, Sixth Edition, New York: ASME, 1971.

[15] Shaw, R., "The Influence of Hole Dimensions on Static Pressure Measurements," *Trans. ASME, Journal of Fluid Mechanics*, Vol. 7, 1960, pp. 550–564.

[16] Rainbird, W. J., "Errors in Measurement of Mean Static Pressure of a Moving Fluid Due to Pressure Holes," Quart. Bull. Div. Mech. Engrg., Nat. Aero, Est., Nat. Res. Council, Canada. Rep. DME/NAE 1967 (3), pp. 55-89.

[17] Franklin, R. E., and Wallace, J. M., "Absolute Measurements of Static-Hole Error Using Flush Transducers," *Trans. ASME, Journal of Fluid Mechanics*, Vol. 42, Part 1, 1970, pp. 33–48.

[18] Benedict, R. P., and Wyler, J. S., "Analytical and Experimental Studies of ASME Flow Nozzles," *Trans. ASME, Journal of Fluid Engineering,* September 1978.

[19] Benedict, R. P., Wyler, J. S., "Analytical and Experimental Studies of ASME Flow Nozzles," ASME Paper 77 WA/FM.

[20] Wyler, J. S., and Benedict, R. P., "Comparisons Between Throat and Pipe Wall Tap Nozzles," *Trans. ASME, Journal of Engineering for Gas Turbines and Power*, 1975.

Copyright ASME International
Provided by IHS under license with ASME
No reproduction or networking permitted without license from IHS Not for Resale

[21] Benedict, R. P., "The Plenum Inlet Discharge Coefficient of an ASME Nozzle" in "Flow, Its Measurement and Control in Science and Industry," vol. 2, ISA, 1981, p. 363.

[22] Peto, J. W., and Pugh, P. G., "The Effects of the Presence of Static Holes on the Measurement of Static Pressures on Models at Supersonic Speeds," NP1 AERO Report 1292, March 1969.

[23] Jaivin, G. I., "Effect of Hole Size on Pressure Measurements Made with a Flat-Plate Dynamic-Head Probe," JPL-TR-32-617, Jet Propulsion Laboratory, California Institute of Technology, June 1964.

[24] Thrasher, L. W., and Binder, R. C., "Influence of Compressibility on Cylindrical Pitot-Tube Measurements," *Trans. ASME*, July 1950, pp. 647 – 650.

[25] Morrison, D. F., Sheppard, L. M., and Williams, M. J., "Hole Size Effect on Hemisphere Pressure Distributions," *J. Roy, Aero. Soc.*, Vol. 71, Royal Aeronautical Society, April 1967, pp. 317 – 319.

[26] Rayle, R. E., "An Investigation of the Influence of Orifice Geometry on Static Pressure Measurements," Master's Thesis, Massachusetts Institute of Technology, 1949.

[27] Benedict, R. P., "Fundamentals of Temperature, Pressure, and Flow Measurements," Third Edition, New York: John Wiley & Sons, 1984.

[28] Wuest, W., "Measurement of Flow Speed and Flow Direction by Aerodynamic Probes and Vanes," AGARD No. 32, 1967.

[29] Chue, S. H. "Pressure Probes for Fluid Measurement," *Prog. Aerospace Sci.*, Vol. 16, no. 2, 1975.

[30] ASME PTC 12.2-1983, "Steam Condensing Apparatus," New York: ASME, 1983.

[31] Todd, K. W., and Fallow, J. B., "Erosion Control in the Wet Steam Turbine," *Proc. Inst. Mech. Engrs.*, Vol. 180, part 30, 1965-66, pp. 50 – 63.

[32] Wyler, J. S., "Probe Blockage Effects in Free Jets and Closed Tunnels," *Trans. ASME, Journal of Engineering for Gas Turbines and Power*, October 1975, pp. 509 – 515.

[33] Nyland, T. W., Englund, D. R., and Anderson, R. C., "Frequency Response of Short Pressure Probes," Instruments and Control Systems, August 1973.

[34] Nyland, T. W., Englund, D. R., and Anderson, R. C., "On the Dynamics of Short Pressure Probes: Some Design Factors Affecting Frequency Response," NASA TN D-6151, February 1971.

[35] Bergh, H., and Tijdeman, H., "Theoretical and Experimental Results for the Dynamic Response of Pressure Measuring Systems," Rep. NLR-TR-F 238, National Aero and Astronautical Research Inst. Amsterdam, January 1965.

[36] Nyland, T. W., Englund, D. R., and Gebben, V. D., "System for Testing Pressure Probes Using a Simple Sinusoidal Pressure Generator," NASA TM X-1931, 1970.

[37] Grandall, I. B., "Theory of Vibrating Systems and Sound," D. Van Nostrand, 1926.

[38] Doebelin, E. O., "Measurement Systems: Application and Design," New York: McGraw-Hill, 1966.

[39] ASME PTC 19.2-1964, "Pressure Measurement," New York: ASME, 1964.

[40] Kreith, F., *Principles of Heat Transfer*, Second Edition, International Textbook Co., Scranton, PA, 1967, p. 49.

[41] McAdams, W. H., *Heat Transmission*, Third Edition, New York: McGraw-Hill, 1964.

Copyright ASME International
Provided by IHS under license with ASME
No reproduction or networking permitted without license from IHS Not for Resale

APPENDIX A
TABLES OF CORRECTIONS AND GRAVITY DATA

Tables begin on the following pages.

Copyright ASME International
Provided by IHS under license with ASME
No reproduction or networking permitted without license from IHS
Not for Resale

Copyright ASME International
Provided by IHS under license with ASME
No reproduction or networking permitted without license from IHS
Not for Resale

TABLE A1
CORRECTIONS FOR TEMPERATURE TO BE APPLIED TO OBSERVED HEIGHT OF MERCURY COLUMNS (ASSUMING BRASS SCALE IS TRUE AT 32°F)

Attached Thermometer, °F	Height of Mercury Column, in.			Attached Thermometer, °F	Height of Mercury Column, in.		
	1	20	30		1	20	30
−20	+0.004745	+0.095	+0.142	15	+0.001546	+0.031	+0.046
−19	.004654	.093	.140	16	.001455	.029	.044
−18	.004562	.091	.137	17	.001364	.027	.041
−17	.004470	.089	.134	18	.001273	.025	.038
−16	.004379	.088	.131	19	.001182	.024	.035
−15	+0.004287	+0.086	+0.129	20	+0.001091	+0.022	+0.033
−14	.004195	.084	.126	21	.001000	.020	.030
−13	.004104	.082	.123	22	.000909	.018	.027
−12	.004012	.080	.120	23	.000818	.016	.025
−11	.003920	.078	.118	24	.000727	.015	.022
−10	+0.003829	+0.077	+0.115	25	+0.000636	+0.013	+0.019
− 9	.003737	.075	.112	26	.000545	.011	.016
− 8	.003646	.073	.109	27	.000454	.009	.014
− 7	.003554	.071	.107	28	.000363	.007	.011
− 6	.003463	.069	.104	29	.000272	.005	.008
− 5	+0.003371	+0.067	+0.101	30	+0.000182	+0.004	+0.005
− 4	.003280	.066	.098	31	.000091	.002	.003
− 3	.003188	.064	.096	32	.000000	.000	.000
− 2	.003097	.062	.093	33	−0.000091	−0.002	−0.003
− 1	.003006	.060	.090	34	.000182	.004	.005
0	+0.002914	+0.058	+0.087	35	−0.000272	−0.005	−0.008
+ 1	.002823	.056	.085	36	.000363	.007	.011
2	.002732	.055	.082	37	.000454	.009	.014
3	.002640	.053	.079	38	.000544	.011	.016
4	.002549	.051	.076	39	.000635	.013	.019
5	+0.002458	+0.049	+0.074	40	−0.000726	−0.015	−0.022
6	.002366	.047	.071	41	.000816	.016	.024
7	.002275	.046	.068	42	.000907	.018	.027
8	.002184	.044	.066	43	.000997	.020	.030
9	.002093	.042	.063	44	.001088	.022	.033
10	+0.002002	+0.040	+0.060	45	−0.001179	−0.024	−0.035
11	.001910	.038	.057	46	.001269	.025	.038
12	.001819	.036	.055	47	.001360	.027	.041
13	.001728	.035	.052	48	.001450	.029	.044
14	.001637	.033	.049	49	.001541	.031	.046

Copyright ASME International
Provided by IHS under license with ASME
No reproduction or networking permitted without license from IHS
Not for Resale

TABLE A1
CORRECTIONS FOR TEMPERATURE TO BE APPLIED TO OBSERVED HEIGHT OF MERCURY COLUMNS (ASSUMING BRASS SCALE IS TRUE AT 32°F) (CONT'D)

Attached Thermometer, °F	Height of Mercury Column, in.			Attached Thermometer, °F	Height of Mercury Column, in.		
	1	20	30		1	20	30
50	−0.001631	−0.033	−0.049	85	−0.004786	−0.096	−0.144
51	.001721	.034	.052	86	.004875	.098	.146
52	.001812	.036	.054	87	.004965	.099	.149
53	.001902	.038	.057	88	.005055	.101	.152
54	.001993	.040	.060	89	.005145	.103	.154
55	−0.002083	−0.042	−0.062	90	−0.005234	−0.105	−0.157
56	.002174	.043	.065	91	.005324	.106	.160
57	.002264	.045	.068	92	.005414	.108	.162
58	.002354	.047	.071	93	.005504	.110	.165
59	.002444	.049	.073	94	.005593	.112	.168
60	−0.002535	−0.051	−0.076	95	−0.005683	−0.114	−0.170
61	.002625	.052	.079	96	.005772	.115	.173
62	.002715	.054	.081	97	.005862	.117	.176
63	.002805	.056	.084	98	.005952	.119	.179
64	.002896	.058	.087	99	.006041	.121	.181
65	−0.002986	−0.060	−0.090	100	−0.006131	−0.123	−0.184
66	.003076	.062	.092	101	.006220	.124	.187
67	.003166	.063	.095	102	.006310	.126	.189
68	.003256	.065	.098	103	.006399	.128	.192
69	.003346	.067	.100	104	.006489	.130	.195
70	−0.003436	−0.069	−0.103	105	−0.006578	−0.132	−0.197
71	.003526	.071	.106	106	.006668	.133	.200
72	.003616	.072	.108	107	.006757	.135	.203
73	.003707	.074	.111	108	.006847	.137	.205
74	.003797	.076	.114	109	.006936	.139	.208
75	−0.003887	−0.078	−0.117	110	−0.007025	−0.141	−0.211
76	.003977	.080	.119	111	.007115	.142	.213
77	.004067	.081	.122	112	.007204	.144	.216
78	.004156	.083	.125	113	.007293	.146	.219
79	.004246	.085	.127	114	.007383	.148	.221
80	−0.004336	−0.087	−0.130	115	−0.007472	−0.149	−0.224
81	.004426	.089	.133	116	.007561	.151	.227
82	.004516	.090	.135	117	.007650	.153	.230
83	.004606	.092	.138	118	.007740	.155	.232
84	.004696	.094	.141	119	.007829	.157	.235
				120	.007918	.158	.238

Copyright ASME International
Provided by IHS under license with ASME
No reproduction or networking permitted without license from IHS
Not for Resale

TABLE A2
CORRECTIONS FOR TEMPERATURE TO BE APPLIED TO OBSERVED HEIGHT OF MERCURY COLUMNS (ASSUMING BRASS SCALE IS TRUE AT 62°F)

Attached Thermometer, °F	Height of Mercury Column, in.			Attached Thermometer, °F	Height of Mercury Column, in.		
	1	20	30		1	20	30
−20	+0.004439	+0.089	+0.133	15	+0.001240	+0.025	+0.037
−19	.004347	.087	.130	16	.001149	.023	.034
−18	.004255	.085	.128	17	.001058	.031	.032
−17	.004164	.083	.125	18	.000967	.019	.029
−16	.004072	.081	.122	19	.000876	.018	.026
−15	+0.003981	+0.080	+0.119	20	+0.000785	+0.016	+0.024
−14	.003889	.078	.117	21	.000694	.014	.021
−13	.003797	.076	.114	22	.000603	.012	.018
−12	.003706	.074	.111	23	.000512	.010	.015
−11	.003614	.072	.108	24	.000421	.008	.013
−10	+0.003523	+0.070	+0.106	25	+0.000330	+0.007	+0.010
− 9	.003431	.069	.103	26	.000239	.005	.007
− 8	.003339	.067	.100	27	.000148	.003	.004
− 7	.003248	.065	.097	28	+0.000057	+0.001	+0.002
− 6	.003157	.063	.095	29	−0.000034	−0.001	−0.001
− 5	+0.003066	+0.061	+0.092	30	−0.000124	−0.002	−0.004
− 4	.002974	.059	.089	31	.000215	.004	.006
− 3	.002882	.058	.086	32	.000306	.006	.009
− 2	.002791	.056	.084	33	.000397	.008	.012
− 1	.002699	.054	.081	34	.000488	.010	.015
0	+0.002608	+0.052	+0.078	35	−0.000578	−0.012	−0.017
+ 1	.002517	.050	.076	36	.000669	.013	.020
2	.002425	.049	.073	37	.000760	.015	.023
3	.002334	.047	.070	38	.000850	.017	.026
4	.002243	.045	.067	39	.000941	.019	.028
5	+0.002151	+0.043	+0.065	40	−0.001032	−0.021	−0.031
6	.002060	.041	.062	41	.001122	.022	.034
7	.001969	.039	.059	42	.001213	.024	.036
8	.001878	.038	.056	43	.001303	.026	.039
9	.001787	.036	.054	44	.001394	.028	.042
10	+0.001695	+0.034	+0.051	45	−0.001485	−0.030	−0.045
11	.001604	.032	.048	46	.001575	.031	.047
12	.001513	.030	.045	47	.001665	.033	.050
13	.001422	.028	.043	48	.001756	.035	.053
14	.001331	.027	.040	49	.001846	.037	.055

Copyright ASME International
Provided by IHS under license with ASME
No reproduction or networking permitted without license from IHS
Not for Resale

TABLE A2
CORRECTIONS FOR TEMPERATURE TO BE APPLIED TO OBSERVED HEIGHT OF MERCURY COLUMNS (ASSUMING BRASS SCALE IS TRUE AT 62°F) (CONT'D)

Attached Thermometer, °F	Height of Mercury Column, in.			Attached Thermometer, °F	Height of Mercury Column, in.		
	1	20	30		1	20	30
50	−0.001937	−0.039	−0.058	85	−0.005091	−0.102	−0.153
51	.002027	.041	.061	86	.005181	.104	.155
52	.002118	.042	.064	87	.005271	.105	.158
53	.002208	.044	.066	88	.005360	.107	.161
54	.002298	.046	.069	89	.005450	.109	.164
55	−0.002389	−0.048	−0.072	90	−0.005540	−0.111	−0.166
56	.002479	.050	.074	91	.005630	.113	.169
57	.002570	.051	.077	92	.005719	.114	.172
58	.002660	.053	.080	93	.005809	.116	.174
59	.002750	.055	.083	94	.005899	.118	.177
60	−0.002840	−0.057	−0.085	95	−0.005988	−0.120	−0.180
61	.002931	.059	.088	96	.006078	.122	.182
62	.003021	.060	.091	97	.006168	.123	.185
63	.003111	.062	.093	98	.006257	.125	.188
64	.003201	.064	.096	99	.006347	.127	.190
65	−0.003291	−0.066	−0.099	100	−0.006436	−0.129	−0.193
66	.003382	.068	.101	101	.006526	.131	.196
67	.003472	.069	.104	102	.006615	.132	.198
68	.003562	.071	.107	103	.006705	.134	.201
69	.003652	.073	.110	104	.006794	.136	.204
70	−0.003742	−0.075	−0.112	105	−0.006884	−0.138	−0.207
71	.003832	.077	.115	106	.006973	.139	.209
72	.003922	.078	.118	107	.007063	.141	.212
73	.004012	.080	.120	108	.007152	.143	.215
74	.004102	.082	.123	109	.007241	.145	.217
75	−0.004192	−0.084	−0.126	110	−0.007331	−0.147	−0.220
76	.004282	.086	.128	111	.007420	.148	.223
77	.004372	.087	.131	112	.007509	.150	.225
78	.004462	.089	.134	113	.007599	.152	.228
79	.004552	.091	.137	114	.007688	.154	.231
80	−0.004642	−0.093	−0.139	115	−0.007777	−0.156	−0.233
81	.004732	.095	.142	116	.007866	.157	.236
82	.004822	.096	.145	117	.007956	.159	.239
83	.004912	.098	.137	118	.008045	.161	.241
84	.005001	.100	.150	119	.008134	.163	.244
				120	.008223	.164	.247

Copyright ASME International
Provided by IHS under license with ASME
No reproduction or networking permitted without license from IHS
Not for Resale

TABLE A3
DIFFERENCE BETWEEN g_1, THE GRAVITATIONAL ACCELERATION AT MEAN SEA LEVEL FOR GIVEN LATITUDE (ϕ), AND STANDARD GRAVITATIONAL ACCELERATION, (g_0 = 32.1740 ft/sec^2)
Table gives ($g_1 - g_0$) as a function of latitude.

Latitude ϕ, deg.	($g_1 - g_0$), ft/sec^2	Latitude ϕ, deg.	($g_1 - g_0$), ft/sec^2	Latitude ϕ, deg.	($g_1 - g_0$), ft/sec^2
0	−0.0863	30	−0.0440	60	+0.0409
1	.0862	31	.0414	61	.0434
2	.0861	32	.0388	62	.0459
3	0.858	33	.0361	63	.0483
4	.0854	34	.0334	64	.0507
5	−0.0850	35	−0.0306	65	+0.0530
6	.0844	36	.0278	66	.0552
7	.0838	37	.0250	67	.0574
8	.0830	38	.0221	68	.0595
9	.0821	39	.0192	69	.0615
10	−0.0812	40	−0.0163	70	+0.0635
11	.0801	41	.0134	71	.0654
12	.0790	42	.0105	72	.0672
13	.0777	43	.0075	73	.0689
14	.0764	44	.0046	74	.0705
15	−0.0749	45	−0.0016	75	+0.0720
16	.0734	46	+0.0013	76	.0735
17	.0718	47	.0043	77	.0748
18	.0701	48	.0073	78	.0760
19	.0683	49	.0102	79	.0772
20	−0.0665	50	+0.0131	80	+0.0783
21	.0646	51	.0160	81	.0793
22	.0625	52	.0189	82	.0801
23	.0605	53	.0218	83	.0809
24	.0583	54	.0246	84	.0816
25	−0.0561	55	+0.0274	85	+0.0821
26	.0538	56	.0302	86	.0826
27	.0514	57	.0329	87	.0830
28	.0490	58	.0356	88	.0832
29	.0465	59	.0383	89	.0834
				90	.0834

GENERAL NOTE: g_1 is computed on basis of Meteorological Gravity System:

$$g_1 = 32.1724\,(1 - 0.0026373 \cos 2\phi + 0.0000059 \cos^2 2\phi), \text{ in ft/sec}^2 \text{ where } \phi = \text{latitude.}$$

Copyright ASME International
Provided by IHS under license with ASME
No reproduction or networking permitted without license from IHS
Not for Resale

TABLE A4
FREE-AIR GRAVITY CORRECTION, C_f = 0.000003086 H FT/SEC^2, WHERE BAROMETER ELEVATION (H) IS IN FEET ABOVE MEAN SEA LEVEL. CORRECTION C_f IS TO BE SUBTRACTED FROM ($g_1 - g_0$).

Barometer Elevation, H, ft	C_f, ft/sec^2	Barometer Elevation, H, ft	C_f, ft/sec^2
−1,000	−0.0031	10,000	0.0309
0	0.0000	11,000	0.0339
+1,000	+0.0031	12,000	.0370
2,000	.0062	13,000	.0401
3,000	.0093	14,000	.0432
4,000	.0123	15,000	.0463
5,000	0.0154	16,000	0.0494
6,000	.0185	17,000	.0525
7,000	.0216	18,000	.0555
8,000	.0247	19,000	.0586
9,000	.0278	20,000	.0617

Copyright ASME International
Provided by IHS under license with ASME
No reproduction or networking permitted without license from IHS
Not for Resale

TABLE A5
CORRECTION OF HEIGHT OF COLUMN TO STANDARD GRAVITY, $B\ (g_1 - g_0)/g_0$

$(g_1 - g_0)$, ft/sec^2	Observed height of manometer or barometer		
	1	20	30
−0.1500	−0.004662	−0.0932	−0.1399
−0.1400	−0.004351	−0.0870	−0.1305
−0.1300	−0.004041	−0.0808	−0.1212
−0.1200	−0.003730	−0.0746	−0.1119
−0.1100	−0.003419	−0.0684	−0.1026
−0.1000	−0.003108	−0.0622	−0.0932
−0.0900	−0.002797	−0.0559	−0.0839
−0.0800	−0.002486	−0.0497	−0.0746
−0.0700	−0.002176	−0.0435	−0.0653
−0.0600	−0.001865	−0.0373	−0.0559
−0.0500	−0.001554	−0.0311	−0.0466
−0.0400	−0.001243	−0.0249	−0.0373
−0.0300	−0.000932	−0.0186	−0.0280
−0.0200	−0.000622	−0.0124	−0.0186
−0.0100	−0.000311	−0.0062	−0.0093
0.0000	0.000000	0.0000	0.0000
+0.0100	+0.000311	+0.0062	+0.0093
+0.0200	+0.000622	+0.0124	+0.0186
+0.0300	+0.000932	+0.0186	+0.0280
+0.0400	+0.001243	+0.0249	+0.0373
+0.0500	+0.001554	+0.0311	+0.0466
+0.0600	+0.001865	+0.0373	+0.0559
+0.0700	+0.002176	+0.0435	+0.0653
+0.0800	+0.002486	+0.0497	+0.0746
+0.0900	+0.002797	+0.0559	+0.0839
+0.1000	+0.003108	+0.0622	+0.0932

GENERAL NOTES:

(a) Tabular values give the correction for gravity, $B(g_1 - g_0)/g_0$ as a function of $(g_1 - g_0)$ and B, where
g_1 = local gravitational acceleration
g_0 = standard gravitational acceleration
B = observed height of column of liquid in barometer or manometer

(b) Since the ratio $(g_1 - g_0)/g_0$ is dimensionless, the correction given in table always is in terms of the units used for B. This permits table to be applied for any units, for example mm as well as inches.

Copyright ASME International
Provided by IHS under license with ASME
No reproduction or networking permitted without license from IHS
Not for Resale

TABLE A6
GRAVITY DATA

Location	Latitude (N) deg.	Latitude (N) min	Longitude (W) deg.	Longitude (W) min	Elevation, ft	Meteorological Gravity, g ft/sec^2	$(g - g_0)/g_0$
Alabama							
Birmingham	33	30.8	86	48.8	587	32.1367	−0.001161
Spring Hill	30	43.1	88	09.1	204	32.1302	−0.001362
Wetumpka	32	31.2	86	12.4	202	32.1355	−0.001197
Arizona							
Phoenix	33	26.6	112	06.8	1067	32.1349	−0.001218
Tucson	32	14.8	110	50.1	2546	32.1270	−0.001462
Winslow	35	00.4	110	37.4	4867	32.1278	−0.001438
Arkansas							
Fort Smith	35	23.3	94	25.5	442	32.1423	−0.000988
Little Rock	34	44.9	92	16.4	292	32.1427	−0.000973
California							
Burbank	34	11.1	118	18.9	612	32.1385	−0.001106
Fresno	36	46.6	119	50.2	300	32.1465	−0.000856
Highland	34	07.5	117	12.5	1288	32.1347	−0.001223
Isleton	38	10.2	121	35.6	20	32.1509	−0.000719
Long Beach	33	46.3	118	11.6	27	32.1393	−0.001080
Maricopa	35	03.8	119	24.0	842	32.1388	−0.001096
Palo Alto	37	26.6	122	09.7	48	32.1504	−0.000735
Pasadena	34	08.1	118	07.6	750	32.1379	−0.001123
Sacramento	38	34.8	121	29.8	19	32.1525	−0.000670
San Diego	32	42.8	117	09.9	22	32.1364	−0.001170
San Francisco	37	47.5	122	25.7	375	32.1508	−0.000724
Sisson	41	18.3	122	19.6	3438	32.1510	−0.000717
Tehama	40	01.6	122	07.2	214	32.1559	−0.000564
Ventura	34	16.8	119	17.6	78	32.1386	−0.001100
Colorado							
Colorado Springs	38	50.8	104	49.5	6043	32.1352	−0.001208
Denver	39	40.6	104	57.1	5379	32.1391	−0.001087
Falfa	37	14.1	107	47.5	6960	32.1271	−0.001458
Grand Junction	39	04.2	108	33.9	4587	32.1399	−0.001063
Connecticut							
Hartford	41	44.8	72	41.8	123	32.1630	−0.000345
New Britain – Bristol	41	41.0	72	58.1	640	32.1621	−0.000370
New Haven	41	19.1	72	55.4	69	32.1622	−0.000368
Orange	41	18.2	72	59.5	299	32.1623	−0.000366
Wolcott	41	33.4	72	58.0		32.1620	−0.000374
Delaware							
Dover	39	09.7	75	32.0	38	32.1552	−0.000587
Wilmington	39	43.0	75	18.2	88	32.1572	−0.000525
District of Columbia							
Washington	38	49.4	77	01.5	23	32.1554	−0.000579
Florida							
Italia	30	37.0	81	43.1	21	32.1320	−0.001306
Leesburg	28	48.6	81	53	98	32.1268	−0.001468
Miami	25	42.8	80	15.1	23	32.1202	−0.001673
Monticello	30	32.7	83	51.1	158	32.1309	−0.001340
Pensacola	30	24.5	87	12.9	6	32.1309	−0.001341
Riverview	27	52.4	82	20.4	20	32.1253	−0.001515
St. Petersburg	27	48.9	82	40.2	49	32.1253	−0.001516
West Palm Beach	26	42.8	80	02.8	7	32.1233	−0.001576

Copyright ASME International
Provided by IHS under license with ASME
No reproduction or networking permitted without license from IHS
Not for Resale

TABLE A6 GRAVITY DATA (CONT'D)

Location	Latitude (N) deg.	Latitude (N) min	Longitude (W) deg.	Longitude (W) min	Elevation, ft	Meteorological Gravity, g ft/sec^2	$(g - g_0)/g_0$
Georgia							
Atlanta	33	45.3	84	23.5	1063	32.1363	−0.001174
Augusta	33	54.8	82	18.0	532	32.1396	−0.001072
Columbus	32	27.0	84	57.6	241	32.1363	−0.001175
Macon	32	50.3	83	37.6	326	32.1372	−0.001145
Savannah	32	54.9	80	40.0	79	32.1377	−0.001129
Idaho							
Boise	43	37.2	116	12.3	2697	32.1589	−0.000472
Sandpoint	48	16.4	116	33.3	2090	32.1742	+0.000005
Illinois							
Chicago	41	47.4	87	35.9	597	32.1610	−0.000405
Dixon	41	49.9	89	27.6	765	32.1609	−0.000410
Keithsburg	41	06.4	90	56	546	32.1588	−0.000473
Springfield	39	47.7	89	39.5	599	32.1548	−0.000598
Streator	41	09.1	88	49.5	623	32.1592	−0.000461
Urbana	40	06.7	88	13.6	728	32.1557	−0.000571
Indiana							
Angola	41	37.7	85	00.6	1043	32.1599	−0.000439
Indianapolis	39	45.9	86	08.8	713	32.1549	−0.000597
Princeton	38	19.2	87	34.0	472	32.1513	−0.000707
Salem	38	35.2	86	08.7	807	32.1510	−0.000718
Terre Haute	39	28.7	87	23.8	495	32.1543	−0.000615
Wabash	40	47.9	85	49.6	683	32.1573	−0.000522
Iowa							
Davenport	41	06.4	90	56	546	32.1588	−0.000473
Dallas Center	41	41.0	93	57.8	1067	32.1583	−0.000490
Iowa City	41	39.6	91	32.2	697	32.1600	−0.000436
Osage	43	16.8	92	48.5	1167	32.1630	−0.000343
Sioux City	42	23.0	97	19	1690	32.1596	−0.000448
Kansas							
Boyle	39	20.0	95	19.8	1129	32.1513	−0.000706
Kansas City	39	05.8	94	35.4	913	32.1516	−0.000699
Newton	38	04.5	97	18.0	1496	32.1474	−0.000828
St. Marys	39	12.4	96	05.4	965	32.1515	−0.000702
Kentucky							
Danville	37	38.9	84	46.4	984	32.1471	−0.000836
Louisville	38	35.2	86	08.7	807	32.1510	−0.000718
Louisiana							
Baton Rouge	30	26.8	91	09.6	39	32.1305	−0.001352
New Orleans	29	56.9	90	04.3	8	32.1297	−0.001379
Sarepta	32	53.5	93	27.1	260	32.1373	−0.001143
Maine							
Fort Kent	47	15.0	68	35.6	524	32.1770	+0.000092
Rockland	44	06.3	69	06.9	31	32.1695	−0.000142
Maryland							
Baltimore	39	17.8	76	37.3	100	32.1555	−0.000575
Massachusetts							
Boston	42	21.6	71	03.8	72	32.1649	−0.000285
Bridgewater	41	58.4	70	58.5	75	32.1633	−0.000333
Cambridge	42	22.8	71	07.8	46	32.1650	−0.000282
Fall River	41	41.9	71	09.4	154	32.1619	−0.000376
Great Barrington	42	11.2	73	18.8	971	32.1610	−0.000405
Lawrence	42	45.8	71	27.5	105	32.1657	−0.000260
Lowell	42	45.8	71	27.5	105	32.1657	−0.000260
Springfield – Holyoke	42	05.0	72	34.4	171	32.1635	−0.000327
Worcester	42	16.5	71	48.5	558	32.1626	−0.000357

Copyright ASME International
Provided by IHS under license with ASME
No reproduction or networking permitted without license from IHS
Not for Resale

TABLE A6 GRAVITY DATA (CONT'D)

Location	Latitude (N) deg.	Latitude (N) min	Longitude (W) deg.	Longitude (W) min	Elevation, ft	Meteorological Gravity, g ft/sec^2	$(g - g_0)/g_0$
Michigan							
Bay City	43	39.9	83	54.2	584	32.1664	−0.000239
Grand Rapids	42	58.0	85	39.5	774	32.1641	−0.000309
Mason	42	34.6	84	25.8	900	32.1623	−0.000365
Seney	46	20.8	85	57.6	733	32.1744	+0.000010
Three Rivers	41	56.5	85	38.1	790	32.1614	−0.000395
Traverse City	44	45.8	85	37.2	591	32.1699	−0.000127
Minnesota							
Duluth-Superior (Wis.)	46	47.0	92	06.4	708	32.1768	+0.000085
Minneapolis-St. Paul	44	58.7	93	13.9	840	32.1715	−0.000080
Mississippi							
Forest	32	21.8	89	27.7	473	32.1348	−0.001219
Missouri							
Columbia	38	56.2	92	19.8	747	32.1512	−0.000709
Forsyth	36	41.0	93	06.2	677	32.1457	−0.000881
Kansas City	39	05.8	94	35.4	913	32.1516	−0.000699
St. Joseph	39	20.0	95	19.8	1129	32.1513	−0.000706
St. Louis	38	38.0	90	12.2	505	32.1519	−0.000687
Montana							
Boulder	46	14.2	112	07.3	4898	32.1602	−0.000431
Hinsdale	48	23.8	107	05.3	2169	32.1761	+0.000065
Miles City	46	24.2	105	50	2356	32.1696	−0.000139
Nebraska							
Dorchester	40	39.3	97	10.2	1496	32.1543	−0.000614
Fremont	41	27.1	96	34.1	1217	32.1579	−0.000503
Hershey	41	04.8	100	57.5	3091	32.1518	−0.000691
Randolph	42	23.0	97	19	1690	32.1596	−0.000448
Nevada							
Boulder Dam	36	01.7	114	46.9	1209	32.1409	−0.001031
Ely	39	14.9	114	53.4	6437	32.1355	−0.001197
Reno	39	32.4	119	48.8	4584	32.1416	−0.001010
Winnemucca	40	58.4	117	43.8	4301	32.1468	−0.000847
New Hampshire							
Lancaster	44	29.5	71	34.3	859	32.1678	−0.000193
Nashua	42	45.8	71	27.5	105	32.1657	−0.000260
New Jersey							
Atlantic City	39	21.9	74	25.0	10	32.1556	−0.000574
Bordentown	40	10.1	74	41.4	57	32.1586	−0.000479
Camden	39	57.1	75	11.7	52	32.1583	−0.000488
Glen Ridge	40	48.1	74	12.2	191	32.1591	−0.000466
Hoboken	40	44	74	02	35	32.1607	−0.000414
Plainville	40	28.0	74	40.6	114	32.1577	−0.000508
Swedesboro	39	43.0	75	18.2	88	32.1572	−0.000525
New Mexico							
Abiquiu	36	12.0	106	15.0	5915	32.1275	−0.001446
Albuquerque	35	05.1	106	37.4	5156	32.1262	−0.001486
Nara Vista	35	38.4	103	03.2	4213	32.1328	−0.001281
Roswell	33	23.6	104	30.7	3565	32.1272	−0.001455

Copyright ASME International
Provided by IHS under license with ASME
No reproduction or networking permitted without license from IHS
Not for Resale

TABLE A6 GRAVITY DATA (CONT'D)

Location	Latitude (N) deg.	Latitude (N) min	Longitude (W) deg.	Longitude (W) min	Elevation, ft	Meteorological Gravity, g ft/sec^2	$(g - g_0)/g_0$
New York							
Albany	42	39.1	73	46.1	200	32.1632	−0.000338
Buffalo	42	57.1	78	49.3	689	32.1637	−0.000321
Ithaca	42	27.1	76	29.0	810	32.1617	−0.000382
Little Falls	43	02.7	74	51.2	448	32.1642	−0.000307
New York City	40	48.5	73	57.7	725	32.1607	−0.000416
Schenectady	42	47.8	74	02.3	702	32.1631	−0.000342
Troy	42	40.6	73	30.7	945	32.1614	−0.000393
Whitehall	43	33.0	73	23.8	138	32.1660	−0.000251
Wilson	43	18.4	78	49.6	285	32.1660	−0.000249
North Carolina							
Asheville	35	35.9	82	33.3	2199	32.1389	−0.001093
Charlotte	35	13.8	80	50.8	748	32.1429	−0.000967
Durham	36	00.2	78	56	413	32.1465	−0.000857
Raleigh	35	47.5	78	40.3	410	32.1446	−0.000916
Wilmington	34	14.2	77	56.6	28	32.1409	−0.001030
Winston-Salem	36	06.1	80	14	932	32.1427	−0.000976
North Dakota							
Bismarck	46	48.5	100	47.1	1688	32.1724	−0.000051
Fargo	46	53.4	96	48.0	900	32.1753	+0.000038
Ray	48	20.4	103	09.8	2269	32.1762	+0.000066
Ohio							
Cincinnati	39	08.3	84	25.3	804	32.1520	−0.000684
Cleveland	41	30.4	81	36.6	689	32.1598	−0.000443
Columbus	39	57.8	82	59.4	758	32.1548	−0.000598
Dayton (Wright Field)	39	46.6	84	05.9	813	32.1549	−0.000596
Dover	40	31.9	81	28.4	906	32.1564	−0.000548
Kent	41	09.3	81	21.3	1168	32.1577	−0.000507
Oberlin	41	17.5	82	13.2	814	32.1586	−0.000479
Steubenville	40	04.0	80	43.3	673	32.1547	−0.000602
Tiffin	41	06.9	83	10.0	763	32.1583	−0.000490
Oklahoma							
Ardmore	34	13.2	97	07.3	828	32.1385	−0.001103
Guymon	36	40.7	101	28.7	3113	32.1378	−0.001126
Oneta	36	01.0	95	42.0	709	32.1438	−0.000940
Seminole	35	14.7	96	34.5	951	32.1413	−0.001017
Oregon							
Eugene	44	02.7	123	05.6	423	32.1680	−0.000189
Glendale	42	44.2	123	25.8	1424	32.1618	−0.000380
Heppner	45	21.4	119	33.2	1962	32.1662	−0.000243
Portland	45	31.4	122	40.7	26	32.1731	−0.000030
Pennsylvania							
Allentown – Bethlehem	40	36.5	75	22.6	328	32.1569	−0.000532
Chester	39	50.7	75	23.9	95	32.1578	−0.000504
Erie	42	07.8	80	04.8	650	32.1610	−0.000405
Harrisburg	40	16.0	76	53.1	340	32.1565	−0.000547
Philadelphia	39	57.1	75	11.7	52	32.1583	−0.000488
Pittsburgh	40	27.4	80	00.6	771	32.1558	−0.000568
Pocono Lake	41	06.2	75	29.4	1698	32.1560	−0.000561
Reading	40	19.2	75	53.9	753	32.1551	−0.000590
University Park	40	47.9	77	51.8	1174	32.1560	−0.000562
Rhode Island							
Cranston	41	47.0	71	27.1	66	32.1624	−0.000361
South Carolina							
Charleston	32	47.2	79	56.0	20	32.1370	−0.001151
McCormick	33	54.8	82	18.0	532	32.1396	−0.001072
Walterboro	32	54.9	80	40.0	79	32.1377	−0.001129

Copyright ASME International
Provided by IHS under license with ASME
No reproduction or networking permitted without license from IHS
Not for Resale

TABLE A6 GRAVITY DATA (CONT'D)

Location	Latitude (N) deg.	Latitude (N) min	Longitude (W) deg.	Longitude (W) min	Elevation, ft	Meteorological Gravity, g ft/sec^2	Meteorological Gravity, $(g - g_0)/g_0$
South Dakota							
Canton	43	17.7	96	35.4	1229	32.1635	−0.000328
Pierre	44	21.9	100	20.8	1190	32.1659	−0.000253
Rapid City	44	05.7	103	16.9	3396	32.1605	−0.000420
Tennessee							
Cleveland	35	09.4	84	52.9	863	32.1404	−0.001046
Columbia	35	36.7	87	02.5	679	32.1440	−0.000934
Knoxville	35	57.7	83	55	919	32.1425	−0.000982
Memphis	35	08.7	90	03.3	263	32.1434	−0.000953
Texas							
Amarillo	35	38.4	103	03.2	4213	32.1328	−0.001281
Austin	30	16.5	97	44.3	539	32.1286	−0.001413
Beaumont – Port Arthur	30	05.2	94	06.0	18	32.1297	−0.001378
Corpus Christi	27	49.2	97	23.3	4	32.1238	−0.001563
Crosbyton	33	22.9	101	33.9	3048	32.1296	−0.001381
Del Rio	29	21.8	100	53.2	956	32.1253	−0.001514
El Paso	31	46.3	106	29.0	3760	32.1232	−0.001582
Galveston	29	18.2	94	47.5	8	32.1281	−0.001430
Grand Saline	32	40.1	95	45.2	469	32.1360	−0.001184
Houston	29	41.4	95	25.1	59	32.1285	−0.001415
Kerrville	30	02.0	99	08.2	1609	32.1262	−0.001488
Laredo	27	30.5	99	31.2	412	32.1218	−0.001625
Marlin	31	18.3	96	53.1	395	32.1329	−0.001278
Port Isabel	26	04.7	97	12.5	10	32.1216	−0.001630
San Angelo	31	28.7	100	24.7	1867	32.1279	−0.001436
Sweetwater	32	28.5	100	23.7	2136	32.1289	−0.001403
Vernon	34	09.1	99	16.3	1196	32.1362	−0.001177
Utah							
Salt Lake City	40	46.1	111	53.8	4337	32.1454	−0.000889
Vermont							
Montpelier	43	33.0	73	23.8	138	32.1660	−0.000251
North Hero	44	49.1	73	17.5	115	32.1712	−0.000089
Virginia							
Clifton Forge	37	49.1	79	49.6	1066	32.1468	−0.000847
Newport News – Hampton	37	02.5	76	25.8	20	32.1484	−0.000798
Oakwood	36	55.7	76	14.6	14	32.1483	−0.000801
Richmond	37	32.2	77	26.1	98	32.1506	−0.000729
Washington							
Olympia	47	03.4	122	52.7	62	32.1790	+0.000153
Seattle	47	36.5	122	19.8	243	32.1757	+0.000051
Spokane	48	16.4	116	33.3	2090	32.1742	+0.000005
Takoma	47	15.2	122	26.3	85	32.1778	+0.000115
West Virginia							
Charleston	38	20.9	81	37.7	604	32.1498	−0.000754
Wheeling – Weirton	40	04.0	80	43.3	673	32.1547	−0.000602
Wisconsin							
Franksville	42	44.2	87	54.3	749	32.1629	−0.000347
Madison	43	04.6	89	24.0	886	32.1639	−0.000316
Oconto	44	53.2	87	52.0	594	32.1694	−0.000146
Wyoming							
Bufora	41	07.4	105	18.3	7861	32.1398	−0.001066
Lander	42	50.0	108	43	5365	32.1491	−0.000776
Sheridan	44	48.0	106	58.7	3773	32.1598	−0.000443

Copyright ASME International
Provided by IHS under license with ASME
No reproduction or networking permitted without license from IHS
Not for Resale

APPENDIX B
COMMONLY USED CONVERSION FACTORS

Quantity	Conversion From	Conversion To	Multiplication Factor	
Acceleration - Linear	ft/sec^2	m/s^2	3.048*	E−01
	standard gravity	m/s^2	9.806 65*	E+00
Area	in^2	m^2	6.451 6	E−04
	ft^2	m^2	9.290 304*	E−02
Density	lbm/ft^3	kg/m^3	1.601 846	E+01
	$slugs/ft^3$	kg/m^3	5.153 788	E+02
Energy, work, heat	Btu (IT)	J	1.055 056	E+03
	ft-lbf	J	1.355 818	E+00
Flow rate, mass	lbm/sec	kg/s	4.535 924	E−01
	lbm/min	kg/s	7.559 873	E−03
	lbm/hr	kg/s	1.259 979	E−04
	slugs/sec	kg/s	1.459 390	E+01
Flow rate, volume	ft^3/min	m^3/s	4.719 474	E−04
	ft^3/sec	m^3/s	2.831 685	E−02
	gallon (US liquid)/min	m^3/s	6.309 020	E−05
Force	lbf (avoirdupois)	N	4.448 222	E+00
Frequency	sec^{-1}	Hz	1*	E+00
Gas constant	ft-lbf/lbm-°R	J/(kg•K)	5.380 320	E+00
Length	in	m	2.54*	E−02
	ft	m	3.048*	E−01
	mile (US)	m	1.609 344*	E+03
Mass	lbm (avoirdupois)	kg	4.535 924	E−01
	slug	kg	1.459 390	E+01
Plane Angle	degrees	rad	1.745 329	E−02
Power	Btu(IT)/hr	W	2.930 711	E−01
	ft-lbf/sec	W	1.355 818	E+00
	hp(550 ft-lbf/sec)	W	7.456 999	E+02
Pressure	standard atmosphere	Pa	1.013 25*	E+05
	bar	Pa	1*	E+05
	lbf/ft^2	Pa	4.788 026	E+01
	lbf/in^2	Pa	6.894 757	E+03
Rotational frequency	min^{-1}	s^{-1}	1.666 667	E−02
Specific heat	Btu/lbm-°R	J/(kg•K)	4.186 8*	E+03
Specific volume	ft^3/lbm	m^3/kg	6.242 797	E−02
Specific weight (force)	lbf/ft^3	N/m^3	1.570 875	E+02
Surface tension	lbf/ft	N/m	1.459 390	E+01
Temperature interval	°F	°C	5.555 556	E−01
Temperature, measured	°F	°C	$t_C = (t_F - 32)/1.8$	
Temperature, thermodynamic	°C	K	$T_K = t_C + 273.15$	
	°F	K	$T_K = (t_F + 459.67)/1.8$	
	°R	K	$T_K = T_R/1.8$	
Time	hr	s	3.6*	E+03
	min	s	6*	E+01
Torque	lbf-in	N•m	1.129 848	E−01
	lbf-ft	N•m	1.355 818	E+00

Copyright ASME International
Provided by IHS under license with ASME
No reproduction or networking permitted without license from IHS
Not for Resale

COMMONLY USED CONVERSION FACTORS (CONT'D)

Quantity	Conversion		Multiplication Factor	
	From	To		
Velocity	ft/hr	m/s	8.466 667	E−05
	ft/min	m/s	5.08*	E−03
	ft/sec	m/s	3.048*	E−01
	knot (international)	m/s	5.144 444	E−01
	mile (US)/hr	m/s	4.470 4*	E−01
Viscosity, dynamic	centipoise	Pa•s	1*	E−03
	poise	Pa•s	1*	E−01
	lbm/ft-sec	Pa•s	1.488 164	E+00
	lbf-sec/ft^2	Pa•s	4.788 026	E+01
	slug/ft-sec	Pa•s	4.788 026	E+01
Viscosity, kinematic	centistoke	m^2/s	1*	E−06
	stoke	m^2/s	1*	E−04
	ft^2/sec	m^2/s	9.290 304*	E−02
Volume	gallon (US liquid)	m^3	3.785 412	E−03
	ft^3	m^3	2.831 685	E−02
	in^3	m^3	1.638 706	E−05
	liter	m^3	1*	E−03

GENERAL NOTE: The factors are written as a number greater than one and less than ten with six decimal places. The number is followed by the letter E (for exponent), a plus or minus symbol, and two digits which indicate to power of 10 by which the number must be multiplied to obtain the correct value.

Example:

3.785 412 E−03 is 3.785 412 × 10^{-3} or 0.003 785 412

NOTE:
*Exact relationships in terms of the base unit.

Copyright ASME International
Provided by IHS under license with ASME
No reproduction or networking permitted without license from IHS
Not for Resale

INSTRUMENTS AND APPARATUS

These supplementary documents give descriptions of, and directions for, the use and calibration of measuring devices likely to be required.

A complete list of ASME publications will be furnished upon request.

SUPPLEMENTS ON INSTRUMENTS AND APPARATUS NOW AVAILABLE

PTC 19.1	— Measurement Uncertainty	1985
PTC 19.3	— Temperature Measurement	1974 (R1986)
PTC 19.5	— Application, Part II of Fluid Meters: Interim Supplement on Instruments and Apparatus	1972
PTC 19.6	— Electrical Measurements in Power Circuits	1955
PTC 19.7	— Measurement of Shaft Power	1980
PTC 19.8	— Measurement of Indicated Horsepower	1970 (R1985)
PTC 19.10	— Flue and Exhaust Gas Analyses	1981
PTC 19.11	— Water and Steam in the Power Cycle (Purity and Quality, Lead Detection and Measurement)	1970
PTC 19.12	— Measurement of Time	1958
PTC 19.13	— Measurement of Rotary Speed	1961
PTC 19.14	— Linear Measurements	1958
PTC 19.16	— Density Determinations of Solids and Liquids	1965
PTC 19.17	— Determination of the Viscosity of Liquids	1965
PTC 19.22	— Digital Systems Techniques	1986
PTC 19.23	— Guidance Manual for Model Testing	1980 (R1985)

D02987

Copyright ASME International
Provided by IHS under license with ASME
No reproduction or networking permitted without license from IHS

Not for Resale