STD.ASME PTC 19.11-ENGL 1997 ■ 0759670 0586886 2T9 ■

AN AMERICAN NATIONAL STANDARD

Steam and Water Sampling, Conditioning, and Analysis in the Power Cycle

ASME
PTC 19.11-1997
(Revision of ASME/ANSI
PTC 19.11-1970)

Instruments and Apparatus

SUPPLEMENT TO ASME PERFORMANCE TEST CODES



The American Society of
Mechanical Engineers

Copyright ASME International
Provided by IHS under license with ASME
No reproduction or networking permitted without license from IHS

Not for Resale

STD·ASME PTC 19.11-ENGL 1997 ■ 0759670 0586887 135 ■

AN AMERICAN NATIONAL STANDARD

ASME
PTC 19.11-1997
(REVISION OF
ASME/ANSI PTC 19.11-1970)

Steam and Water Sampling, Conditioning, and Analysis in the Power Cycle

Instruments and Apparatus



The American Society of Mechanical Engineers

PERFORMANCE TEST CODES

Copyright ASME International
Provided by IHS under license with ASME
No reproduction or networking permitted without license from IHS

Not for Resale

Date of Issuance: October 10, 1997

This document will be revised when the Society approves the issuance of the next edition. There will be no Addenda issued to ASME PTC 19.11-1997.

Please Note: ASME issues written replies to inquiries concerning interpretation of technical aspects of this document. The interpretations are not part of the document. PTC 19.11-1997 is being issued with an automatic subscription service to the interpretations that will be issued to it up to the publication of the next edition.

ASME is the registered trademark of The American Society of Mechanical Engineers.

This code or standard was developed under procedures accredited as meeting the criteria for American National Standards. The Consensus Committee that approved the code or standard was balanced to assure that individuals from competent and concerned interests have had an opportunity to participate. The proposed code or standard was made available for public review and comment which provides an opportunity for additional public input from industry, academia, regulatory agencies, and the public-at-large.

ASME does not "approve," "rate," or "endorse" any item, construction, proprietary device, or activity.

ASME does not take any position with respect to the validity of any patent rights asserted in connection with any items mentioned in this document, and does not undertake to insure anyone utilizing a standard against liability for infringement of any applicable Letters Patent, nor assume any such liability. Users of a code or standard are expressly advised that determination of the validity of any such patent rights, and the risk of infringement of such rights, is entirely their own responsibility.

Participation by federal agency representative(s) or person(s) affiliated with industry is not to be interpreted as government or industry endorsement of this code or standard.

ASME accepts responsibility for only those interpretations issued in accordance with governing ASME procedures and policies which preclude the issuance of interpretations by individual volunteers.

No part of this document may be reproduced in any form,
in an electronic retrieval system or otherwise,
without the prior written permission of the publisher.

The American Society of Mechanical Engineers
345 East 47th Street, New York, NY 10017

Copyright © 1997 by
THE AMERICAN SOCIETY OF MECHANICAL ENGINEERS
All Rights Reserved
Printed in U.S.A.

Copyright ASME International
Provided by IHS under license with ASME
No reproduction or networking permitted without license from IHS

Not for Resale

FOREWORD

(This Foreword is not a part of ASME PTC 19.11–1997.)

This Supplement is a revised and updated version of ASME/ANSI PTC 19.11-1970, Water and Steam in the Power Cycle (Purity and Quality, Leak Detection and Measurement). It differs from its predecessor in a number of ways, including format and content. The format has been reorganized to follow the flow of the sample. The content has been expanded to reflect advances made since 1970, in all related areas affecting accurate measurements. PTC 19.11 (1997 version) was approved by the ASME Board on Performance Test Codes on May 28, 1996 and adopted by the American National Standards Institute (ANSI) as an American National Standard on February 13, 1997.

Experience shows that the design, construction, and operation of sampling systems for thermal power plants have often been less than ideal. Such practices as withdrawing samples from drilled holes through the pipe or tube wall and sampling lines as large as $^3/_4$-inch pipe with numerous threaded fittings have been all too common. Ignoring the importance of maintaining proper fluid velocities in sampling lines has led to deposition of impurities on sample line surfaces so that the sample being analyzed bears little resemblance to the sample at its source. Improper sample conditioning (sample condensing and/or cooling and sample flow regulation) along with poor sampling locations and analysis methods have also taken their toll. And, finally, failure to permanently record and analyze the data taken can lead to expensive failures. The purpose of this Supplement is to present information on proper design, construction, and operation of steam and water sampling systems in the power cycle. The following sections are included.

Section 1, OBJECT, SCOPE, AND APPLICATION, describes the aims, content, and limits of this Supplement.

Section 2, SAMPLE SELECTION CRITERIA, describes the components of a thermal power plant and describes what sample locations might be selected.

Section 3, OBTAINING THE SAMPLE, describes equipment design and operation for taking samples of saturated steam, superheated steam, and water.

Section 4, TRANSPORTING THE SAMPLE, deals with proper sampling line design and operation. A table of satisfactory sample line sizes for various pressures and line lengths is presented.

Section 5, SAMPLE CONDITIONING, describes the recommended design and operation so as to provide proper sample flow, pressure, and temperature control which is required for manual or automatic analysis.

Section 6, SAMPLE ANALYSIS AND INSTRUMENTATION, describes analyses that are usually made of samples. Principles of operation, precision, and literature references for analysis methods are also given.

Section 7, DATA COLLECTION, ANALYSIS, AND CONTROL, describes automatic instrumentation for collecting and storing data, means for retrieving and analyzing stored data (for example, short- and long-term trends), and for automated control purposes.

Nonmandatory Appendices

(a) A, Leakage Detection and Measurement

(b) B, Throttling Calorimeter

Copyright ASME International
Provided by IHS under license with ASME
No reproduction or networking permitted without license from IHS
Not for Resale

NOTICE

All Performance Test Codes MUST adhere to the requirements of **PTC 1, GENERAL INSTRUCTIONS**. The following information is based on that document and is included here for emphasis and for the convenience of the user of this Supplement. It is expected that the Code user is fully cognizant of Parts I and III of PTC 1 and has read them prior to applying this Supplement.

ASME Performance Test Codes provide test procedures which yield results of the highest level of accuracy consistent with the best engineering knowledge and practice currently available. They were developed by balanced committees representing all concerned interests. They specify procedures, instrumentation, equipment operating requirements, calculation methods, and uncertainty analysis.

When tests are run in accordance with a Code, the test results themselves, without adjustment for uncertainty, yield the best available indication of the actual performance of the tested equipment. ASME Performance Test Codes do not specify means to compare those results to contractual guarantees. Therefore, it is recommended that the parties to a commercial test agree **before starting the test and preferably before signing the contract** on the method to be used for comparing the test results to the contractual guarantees. It is beyond the scope of any code to determine or interpret how such comparisons shall be made.

Copyright ASME International
Provided by IHS under license with ASME
No reproduction or networking permitted without license from IHS
Not for Resale

PERSONNEL OF PERFORMANCE TEST CODES COMMITTEE NO. 19.11 STEAM AND WATER SAMPLING, CONDITIONING, AND ANALYSIS IN THE POWER CYCLE

(The following is the roster of the Committee at the time of approval of this Supplement.)

OFFICERS

M. D. Farrell, *Chair*
J. W. Siegmund, *Vice Chair*
G. Osolsobe, *Secretary*

COMMITTEE PERSONNEL

J. C. Bellows, Westinghouse Electric Corp.
L. O. Brestel, Power Chem Consultants, Inc.
E. E. Coulter, Consultant
M. D. Farrell, Sentry Equipment Corp.
D. M. Gray, Thornton Associates, Inc.
R. W. Lane, Consultant
R. A. Lewis, Southern Company Services, Inc.
N. J. Mravich, Babcock & Wilcox, Inc.
R. M. Ricker, Consultant
J. W. Siegmund, Sheppard T. Powell Assoc., Inc.

The PTC 19.11 Committee wishes to acknowledge the extraordinary inspiration and technical input it has received from its two senior members Earl Coulter and Russell Lane. Their work proved to be the foundation, and considerable part of the content, of this revision.

Copyright ASME International
Provided by IHS under license with ASME
No reproduction or networking permitted without license from IHS
Not for Resale

BOARD ON PERFORMANCE TEST CODES

OFFICERS

D. R. Keyser, *Chair*
P. M. Gerhart, *Vice Chair*
W. O. Hays, *Secretary*

COMMITTEE PERSONNEL

R. P. Allen
R. L. Bannister
B. Bornstein
J. M. Burns
J. R. Friedman
G. J. Gerber
P. M. Gerhart
R. S. Hecklinger
R. W. Henry
D. R. Keyser
S. J. Korellis
J. W. Milton
G. H. Mittendorf, Jr.
S. P. Nuspl
R. P. Perkins
A. L. Plumley
C. B. Scharp
J. W. Siegmund
J. A. Silvaggio, Jr.
R. E. Sommerlad
W. G. Steele
J. C. Westcott
J. G. Yost

Copyright ASME International
Provided by IHS under license with ASME
No reproduction or networking permitted without license from IHS
Not for Resale

CONTENTS

Foreword iii
Committee Roster v

Section

1 Object, Scope, and Application 1
2 Sample Point and Analysis Selection Criteria 3
3 Obtaining the Sample 9
4 Transporting the Sample 13
5 Sample Conditioning 19
6 Sample Analysis and Instrumentation 25
7 Data Acquisition, Data Analysis, and Control 39

Figures

2.1 Components and Sampling Points for a Generalized Fossil Cycle 4
3.1 Typical Nozzles for Sampling Water 10
3.2 Effects of Non-Isokinetic Sampling 10
3.3 Typical Single-Port Nozzle 11
5.1 Typical Sample Line for High Pressure Service 22
7.1 Major Elements of a Typical Data Acquisition System 41

Tables

2.1 Sample Points and Analyses Location 5
3.1 Minimum Steam Velocities at Various Pressures 11
4.1 Recommended Sample Tube Sizes 16
6.1 Alkalinity 27
6.2 Types of Neutralizing Amines 28
6.3 Amines (Neutralizing) 28
6.4 Ammonia 28
6.5 Carbon Dioxide 29
6.6 Chloride 29
6.7 Specific Conductivity 29
6.8 Cation Conductivity 30
6.9 Copper 30
6.10 Dissolved Oxygen 30
6.11 Hydrazine 31
6.12 Hydrogen 31
6.13 Ion Chromatography 32
6.14 Iron 32
6.15 Organic Anions 32
6.16 Oxygen Scavengers 33

Copyright ASME International
Provided by IHS under license with ASME
No reproduction or networking permitted without license from IHS
Not for Resale

6.17	pH	33
6.18	Phosphate	33
6.19	Silica	34
6.20	Sodium	34
6.21	Sulfate	34
6.22	Total Organic Carbon (TOC)	35
6.23	Turbidity	35

Nonmandatory Appendices

A	Leakage Detection and Measurement	47
B	Throttling Calorimeter	55

Table

A.1	Common Air Leak Locations	52

Figures

B.1	Mollier Diagram (H-s) for Steam	56
B.2	Throttling Calorimeter Showing Sampling Tube Installed in Steam Pipe	57
B.3	Percent Moisture in Steam versus Calorimeter Temperature	58

Copyright ASME International
Provided by IHS under license with ASME
No reproduction or networking permitted without license from IHS
Not for Resale

SECTION 1 — OBJECT, SCOPE, AND APPLICATION

1.1 OBJECT

The Object of this Supplement is to specify and discuss the methods and instrumentation for testing boiler make-up and feedwater, steam, and condensate in relation to performance testing as may be required in Performance Test Codes in one-time acceptance testing and in continuous performance monitoring.

This Supplement also provides guidance to power plant management, engineers, chemists, and operators in the design and operation of sampling systems for monitoring of cycle chemistry. The methods and equipment recommended herein may be useful for monitoring other influent and effluent streams of the power plant.

Contamination of the steam and water cycle must be at or less than the maximum specified for the performance test before a turbine, condenser, or deaerator performance test is made.

1.2 SCOPE

This Supplement includes:

- sample selection
- sample collection and conditioning
- sample analysis
- data analysis

1.3 APPLICATION

The procedures, methods, and component information described in this Supplement are provided for guidance in obtaining, transporting, conditioning, and analyzing samples and detecting leaks in steam power cycles. Application of these techniques should help assure the performance determination (testing and operation) of significant components and of the steam cycle system in general. Additional sampling points and/or analysis, redundancy, etc., are considerations for specific steam cycles but do not degrade the fundamental techniques detailed in the Supplement. This Supplement is applicable to any thermal power plant that involves water as a working fluid, including, but not limited to, the following steam power cycles:

Fossil (utility/industrial base load and cycling)

- combined cycle
- bottoming cycle
- topping cycle
- utility nuclear[1]
- solar

Specific areas not covered include:

- geothermal
- techniques specific to handling radioactive fluids
- service water cycle
- cooling tower cycle

1.4 UNCERTAINTY

Measurement uncertainty is not applicable to this Supplement. As stated in the Object, this Supplement primarily provides guidance in the design and operation of sampling systems for monitoring cycle steam and water chemistry. Section 6 is included to provide a general overview of the analytical methods typically used in steam cycle water chemistry. Published analytical methods noted should be consulted for parameter uncertainty determination. Other noted analytical methodology should have parameter uncertainty determined and agreed to by the relevant parties prior to its acceptance for use in performance testing.

[1]The handling and disposal of radioactive water and other hazardous materials require procedures beyond the scope of this Supplement. It is the user's responsibility to determine and comply with all applicable codes and regulations.

Copyright ASME International
Provided by IHS under license with ASME
No reproduction or networking permitted without license from IHS

Not for Resale

SECTION 2 — SAMPLE POINT AND ANALYSIS SELECTION CRITERIA

2.1 INTRODUCTION

Sample point and analysis selection depend upon the purpose of testing. Each cycle component has a particular function. An agreement between the buyer and seller defines the specification. The sampling and analysis are designed to determine that the component is functioning as specified and that it is functioning properly in operation. Proper function is determined completely in a performance test by analyzing the sample to ascertain that all specifications are met. In operation the proper function is assessed by less complete testing that concentrates on the most important impurities and on the most likely failures.

This Section focuses on the selection of sample point locations and the analyses that are commonly conducted for those locations. Most of the sample points are concerned with water quality assurance and equipment performance evaluation. For these points, continuous analysis is preferred. A few points are present largely to provide special data for analysis of problems. Grab samples will usually suffice at these points. Section 6 focuses on the analyses, their meaning, and the methods.

The following discussion reviews components of a thermal power cycle that can affect the chemistry of the water and steam. Figure 2.1 shows these components and sampling points schematically for a generalized fossil cycle. The steam cycle of nuclear power plants is similar to the fossil plants except that many nuclear plants do not have a deaerating feedwater heater and most nuclear plants have a moisture separator reheater that extracts moisture from the steam and superheats the vapor. Not all these components will necessarily be present in a particular application. Their presence in Fig. 2.1 does not imply that they are always needed. Table 2.1 summarizes the sample points and the analyses. The text and Table 2.1 suggest more analyses than most plants would use. They should be used as a guide for consideration of analyses at each location. For proper testing, a sample must be provided at each cycle point for which there is a specification. Figures for other fossil cycles and for the BWR cycle can be found in Chapter 17 of the *ASME Handbook on Water Technology for Thermal Power Systems* (1). Diagrams of PWR secondary cycles can be found in *PWR Secondary Water Chemistry Guidelines — Revision 3* (2).

Boiling water reactor systems are discussed, but the special problems associated with the radioactivity and gas concentrations in the water are not addressed here. In BWR systems, no pH control additives are present, therefore, specific conductivity is the only conductivity measurement used. Oxygen, chloride, and sulfate are the only other common analyses. When zinc is added to the reactor to control radiation, a zinc analysis will be performed.

In systems with copper alloys in the condenser or feedwater heaters, the analysis of copper will commonly be appropriate. In all-ferrous systems, the analysis of copper will usually not be appropriate, but occasional analysis may be desired to be sure that no copper is entering the system from unsuspected sources.

2.2 WATER TREATMENT SCHEMES

The water treatment scheme also affects the sampling system and the analyses performed at each location. Units on all volatile treatment (AVT) will not require phosphate analysis of the boiler water. However, if solid treatment (phosphate or caustic) of drum type units under emergency conditions is planned, the appropriate sampling and analysis equipment will be necessary. The amine selected for pH control may require special analytical techniques.

For oxygenated water treatment (OT) schemes, the deaerating heater may be absent or not used, the selection of sampling depends on the way the deaerator is operated. Monitors for oxygen scavenger (such as hydrazine) are not used for OT or when AVT is practiced without oxygen scavenger. For OT schemes in recirculating boilers, a sample must be

Copyright ASME International
Provided by IHS under license with ASME
No reproduction or networking permitted without license from IHS

Not for Resale

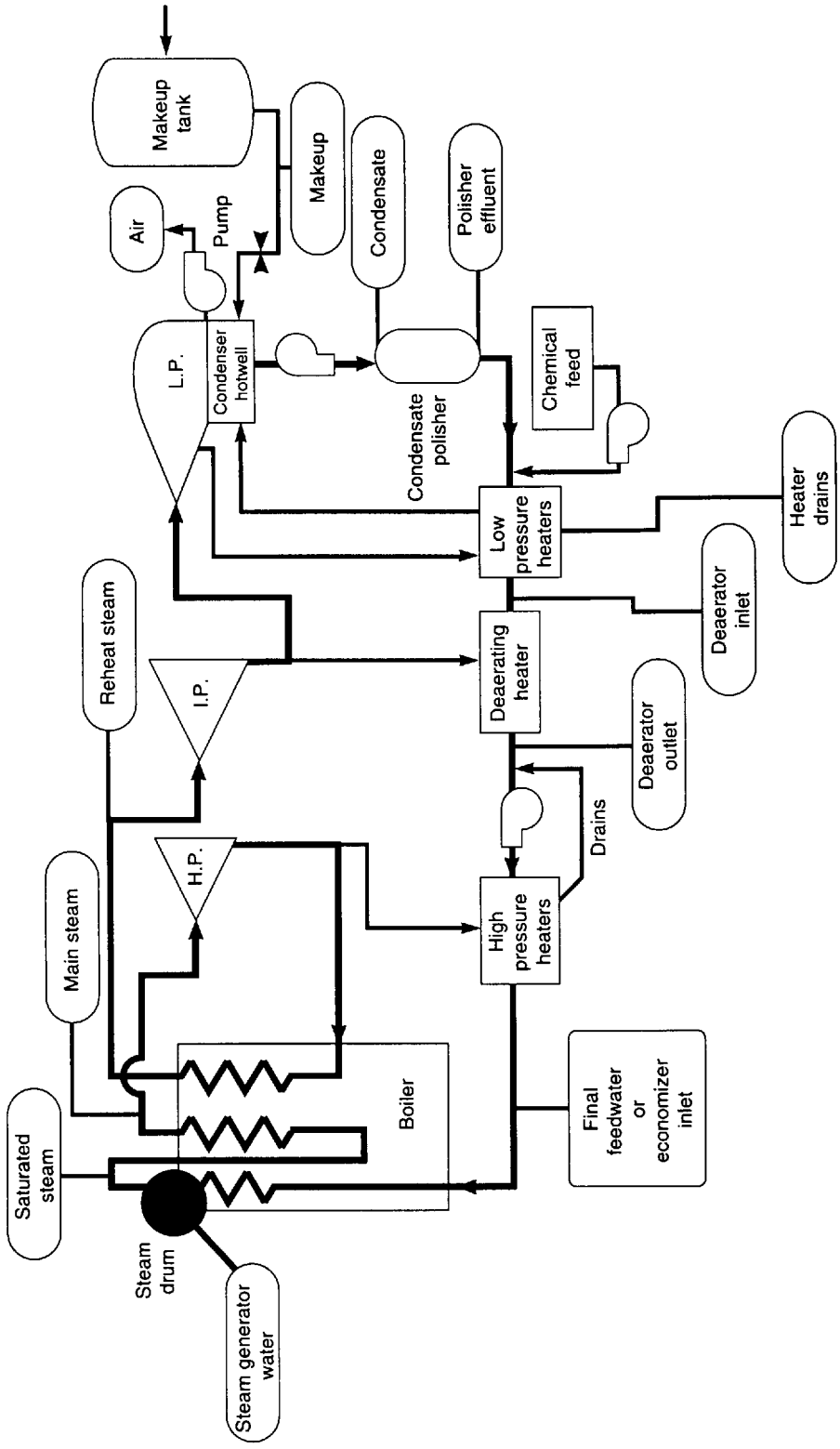

FIG. 2.1 COMPONENTS AND SAMPLING POINTS FOR A GENERALIZED FOSSIL CYCLE
Figures for other cycles can be found in Chapter 17 of the ASME Handbook on Water Technology for Thermal Power Systems (1).

Copyright ASME International
Provided by IHS under license with ASME
No reproduction or networking permitted without license from IHS

Not for Resale

Copyright ASME International
Provided by IHS under license with ASME
No reproduction or networking permitted without license from IHS

TABLE 2.1
SAMPLE POINTS AND ANALYSES LOCATION

Analysis	Makeup	Condensate	Pol. Eff.	DA In	DA Out	Final Feedwater	SG Water (1)	Sat. Steam	Superheated Steam
Sp. Cond.	N	N	N			N	N		
Cat. Cond.	L	N	N			N	L/N (2)		N
Degassed Cat. Cond.		L							L
pH	L	N				N	N		L
Sodium	N	N	N			N	L/N (2)	N	N
Silica	N	N	N			N	N	N	L
Oxygen	L	N		L	N	N		L	L
Oxygen Scavenger						N	L/N (2)		
Iron		N	L			N	S	L	R
Copper (2)		N (2)	L			N	S	L	R
TOC	L					L	L		L
Hardness	L						L (2)		
Ammonia/amine		N			N	L			
Chloride			L			L	L	L	L
Sulfate			L			L	L	L	L
Phosphate							N (2)		
Free alkalinity							N (2)		

N = Normal
L = Less common
R = Rare or occasional
S = Less common except at startup

NOTES:
(1) See text for BWR reactor water sampling and OT sampling.
(2) Water treatment or materials dependent.

GENERAL NOTE: Moisture separator reheater and feedwater drains are omitted from the table since they seldom have chemical specifications. See text.

Not for Resale

taken from a location like the downcomer or waterwall header and analyzed for oxygen to confirm that oxygen has been removed. (3)

2.3 MAKEUP

For this Supplement, the makeup is treated as the start of the system. The makeup is commonly stored in a tank open to the atmosphere. The characteristics of the raw water will determine the design details of the makeup train and the sampling and analysis required. Each makeup train effluent is sampled and will commonly be analyzed for specific conductivity, silica, and sodium. Other less common analyses will be for cation conductivity, pH, oxygen, total organic carbon (TOC), and hardness. The same analyses apply to makeup and condensate storage tanks.

2.4 CONDENSATE

The condenser usually has two functions. The first function is to condense steam and to cool the condensate. This function is accomplished by passing cooling water through tubes in the steam path. Occasionally the tubes or their joints to the tube sheets leak and allow the low purity cooling water into the condensate. To determine that the condenser is not leaking, the condensate pump outlet is commonly sampled for cation conductivity and sodium. Other common analyses are specific conductivity, pH and silica (on line or grab sample), and metals (grab sample only). The second function is to remove volatile impurities, such as air, from the condensate. Air ejector flow rate and condensate oxygen are evaluated to confirm that this function is successful. Cation conductivity and degassed cation conductivity may also be used to confirm removal of volatile components.

Since the condenser is under vacuum, the condensate sample is usually collected from the condensate pump discharge. Air leaking into this pump can be confused with failure of the condenser to remove air. Additional sample points with independent sample pumps may be supplied for individual condenser sections to assist in location of a leak. These individual hotwell samples are commonly analyzed for specific conductivity, cation conductivity, or sodium. Troughs at the bottom of condenser tube sheets may have in-situ conductivity probes.

2.5 POLISHER EFFLUENT

Condensate polishers are present in some cycles to remove trace impurities from the condensate and to allow orderly shutdown in the event of a condenser leak. Their effluent is commonly sampled for specific conductivity, cation conductivity, sodium, and silica. These analyses should be made with on-line instruments. Chloride and sulfate analyses are becoming increasingly common. Copper and iron may also be analyzed.

2.6 DEAERATOR INLET

The deaerator inlet is commonly sampled for oxygen. Sampling may not be routine, but when problems develop with deaerator function it is essential to know how much oxygen is entering the deaerator. Reference Subsection 2.2 for OT comments.

2.7 DEAERATOR OUTLET

The deaerator outlet (feed pump inlet) is commonly sampled for oxygen. When problems develop with the deaerator it is essential to know how much oxygen is leaving the deaerator. The deaerator outlet sample is usually downstream of the deaerator storage tank, where reaction between an oxygen scavenger and oxygen may occur. The change in oxygen between the deaerator inlet and outlet indicates the effectiveness of the combination of mechanical deaeration and chemical oxygen scavenging.

2.8 FINAL FEEDWATER OR ECONOMIZER INLET

Since the feedwater pump can entrain oxygen, the final feedwater is the preferred location for determining compliance with the steam generator feedwater purity requirements and is commonly used for dissolved oxygen control. The final feedwater or economizer inlet is commonly sampled for most of the impurities relevant to the steam cycle. The analyses usually include specific conductivity, cation conductivity, pH, ammonia or amines, sodium, silica, oxygen, hydrazine (or other oxygen scavenger), copper (if appropriate), and iron. Less common analyses are chloride, sulfate, and TOC.

Copyright ASME International
Provided by IHS under license with ASME
No reproduction or networking permitted without license from IHS

Not for Resale

2.9 STEAM GENERATOR WATER

Steam generator is used in its most general sense here. It includes fossil fired boilers, the secondary side of nuclear steam generators, and other steam generators as may be appropriate. Radioactive samples, such as PWR primary water and post accident samples, are not included. BWR reactor water is essentially a steam generator sample and is included, but the special considerations due to its radioactivity are not addressed. Steam generator water is in contact with heat transfer surfaces. Contaminants in this water affect the performance and reliability of the steam generator. In recirculating steam generators, the steam generator water is a concentrated sample that is usually easier to analyze than the high purity feedwater. This sample point exists at the flash tank in once-through fossil steam generators, but is usually sampled only during startup.

2.9.1 Steam Generators On Solids Treatment. Steam generators on solids treatment will commonly be sampled for specific conductivity, pH, free alkalinity (alkalinity not associated with phosphate present), phosphate (if appropriate), silica, and sulfite or other oxygen scavenger (if appropriate). Less common are cation conductivity, sodium, chloride, sulfate, TOC, ammonia or amines, and hardness (where appropriate). Suspended iron (and copper, if appropriate) is commonly determined during startup.

2.9.2 Steam Generators On AVT. Steam generators on AVT will commonly be sampled for specific conductivity, cation conductivity, pH, sodium, and silica. Less commonly sampled are ammonia or amines, chloride, sulfate, and TOC. Suspended iron (and copper, if appropriate) is commonly determined during startup.

2.9.3 Steam Generators On OT. Steam generators on OT will usually be sampled only if they are the recirculating type. On these steam generators, a downcomer will commonly be sampled for cation conductivity and oxygen. Less commonly sampled are sodium, chloride, sulfate, silica, pH, specific conductivity, and ammonia.

2.9.4 BWR Reactor Water. Reactor water is commonly sampled for specific conductivity, chloride, sulfate, zinc (if zinc injection is in use), oxygen, silica, radioisotopes, and electrochemical corrosion potential. (4)

2.10 SATURATED STEAM

Saturated steam is sampled to determine the quantity of moisture and chemical carryover from the boiler. It is commonly analyzed for sodium and silica. Performance testing is usually based on sodium for fossil systems or on radioisotope tracer analysis for nuclear systems. In recirculating PWR systems, this sample point is the main steam, and cation conductivity is commonly analyzed. Less commonly analyzed are iron and copper (if appropriate), chloride, sulfate, and oxygen.

2.11 SUPERHEATED STEAM (INCLUDING REHEAT)

In fossil steam cycles with reheat, reheat steam is the preferred sample since it contains the effects of all attemperation water and any organic compounds that may have decomposed in the steam generator. Main steam shall be sampled when specified. Superheated steam is commonly analyzed for sodium and cation conductivity. Less common are degassed cation conductivity, pH, oxygen, silica, chloride, sulfate, and TOC. The superheated steam may occasionally be analyzed for iron and copper.

2.12 FEEDWATER HEATER DRAINS

Feedwater heater drains do not usually have water chemistry specifications. Samples from them are useful in determining the sources of metal oxide contamination in the cycle. Continuous analysis is not required, but occasional grab samples can be useful.

2.13 MOISTURE SEPARATOR REHEATER DRAINS

Moisture separator reheater (MSR) drains in nuclear power plants do not usually have water chemistry specifications. However, the ability to monitor them for specific conductivity, cation conductivity, and sodium may be useful for diagnosis of cycle chemistry problems.

2.14 REFERENCES

(1) Grabowski, H.A. "Management of Cycle Chemistry," Ch. 17 in *ASME Handbook on Water*

Copyright ASME International
Provided by IHS under license with ASME
No reproduction or networking permitted without license from IHS

Not for Resale

Technology for Thermal Power Systems. American Society of Mechanical Engineers, 1989.

(2) PWR Secondary Water Chemistry Guidelines Revision Committee, *PWR Secondary Water Chemistry Guidelines — Revision 3.* EPRI TR-102134, 1993.

(3) Cycle Chemistry Guidelines for Fossil Plants; *Oxygenated Treatment.* EPRI TR-102285, 1994.

(4) BWR Water Chemistry Guidelines Revision Committee, *BWR Water Chemistry Guidelines — 1993 Revision.* EPRI TR-102134, 1993.

Copyright ASME International
Provided by IHS under license with ASME
No reproduction or networking permitted without license from IHS

Not for Resale

SECTION 3 — OBTAINING THE SAMPLE

3.1 INTRODUCTION

This Section specifies the equipment and procedures required to extract samples of saturated steam, superheated steam, and water from the power cycle.

3.2 WATER SAMPLING

Water and condensate in power plant systems often contain particulate matter, especially particles of metal oxides. Therefore a two-phase system, consisting of particles dispersed in water, results. However, the difference in densities of water and particles is less than that between steam and water droplets, and the viscosity of water is much greater than that of steam. Therefore, particles in water follow changes in flow direction much more readily than water droplets in steam. Consequently isokinetic sampling is normally not required for water samples. See Subsection 3.3. Stratification and settling of particulates may occur in horizontal lines with low velocities.

Colloidal particles of metal oxides form deposits on their containers. These deposits tend to sorb dissolved impurities from the water. Therefore it is important to design sampling systems so that the buildup of metal oxide deposits is minimized. Reference 6 shows that the optimum velocity is 5 to 7 ft/s (1.5 to 2.1 m/s). In this velocity range, deposition and erosion stabilize at a constant value after 30 days of operation. See Section 4 for further discussion of sample line deposition.

3.2.1 Sampling Nozzles. Sampling nozzles for liquid samples shall not sample from the bottom of a horizontal pipe. To eliminate settling resulting from low velocities, the preferable location is in a vertical pipe. Typical nozzles for sampling water are shown in Fig. 3.1.

3.2.2 Boiler Water Sample. The boiler water sample is an important sample which is commonly used to assess the blowdown requirements for the boiler. Since it is essential that the sample be taken from the location of maximum impurity concentration, the boiler manufacturer and system designers should be consulted for correct placement.

3.3 ISOKINETIC SAMPLING

Isokinetic sampling requires that the velocity of the fluid entering the sampler port(s) is exactly the same as the velocity of the stream being sampled at the location of the sampler. The effects of non-isokinetic sampling are illustrated in Fig. 3.2 and are discussed in Ref. (1).

3.4 SATURATED STEAM

Because saturated steam is often a two-phase fluid, made up of steam and small droplets of water, isokinetic sampling should be employed. Since steam velocities vary with boiler load, normally it is not practical to sample isokinetically throughout the load range. Normally, the load of interest is full load or a guaranteed overload. The sampling system should be designed to provide isokinetic sampling at this design load. When isokinetic sampling is required over a range of steam flow rates, the sampling system shall be designed to provide adequate sample flow and isokinetic conditions for both the least and the maximum anticipated steam flow rates.

The moisture content in wet steam forms a film along the inside surface of the pipe at low velocities. (2) Table 3.1 shows the minimum steam velocities at various pressures at which legitimate samples may be obtained.

3.4.1 Sampling Nozzles. Stratification of suspended solids in horizontal steam pipes can influence the composition of the steam samples. To minimize the effects of stratification, it is recommended that steam sampling nozzles be located in long vertical pipes. To ensure that all water droplets are carried in the flow stream, downward flow is preferred. Nozzles which must be located in a horizontal pipe should be near the top of the pipe. (1)

Sampling nozzles can be either single port or multi-port configuration as specified or recom-

Copyright ASME International
Provided by IHS under license with ASME
No reproduction or networking permitted without license from IHS
Not for Resale

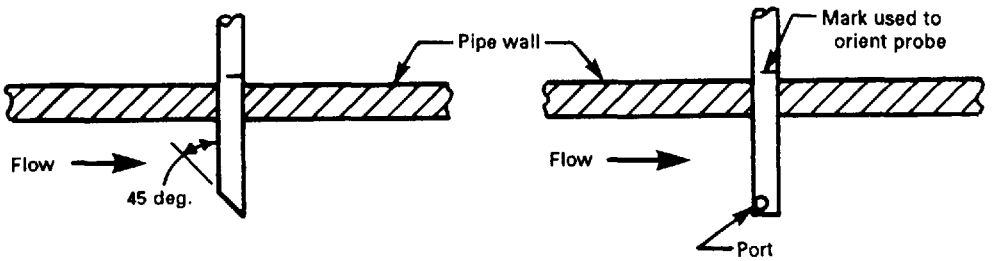

FIG. 3.1 TYPICAL NOZZLES FOR SAMPLING WATER

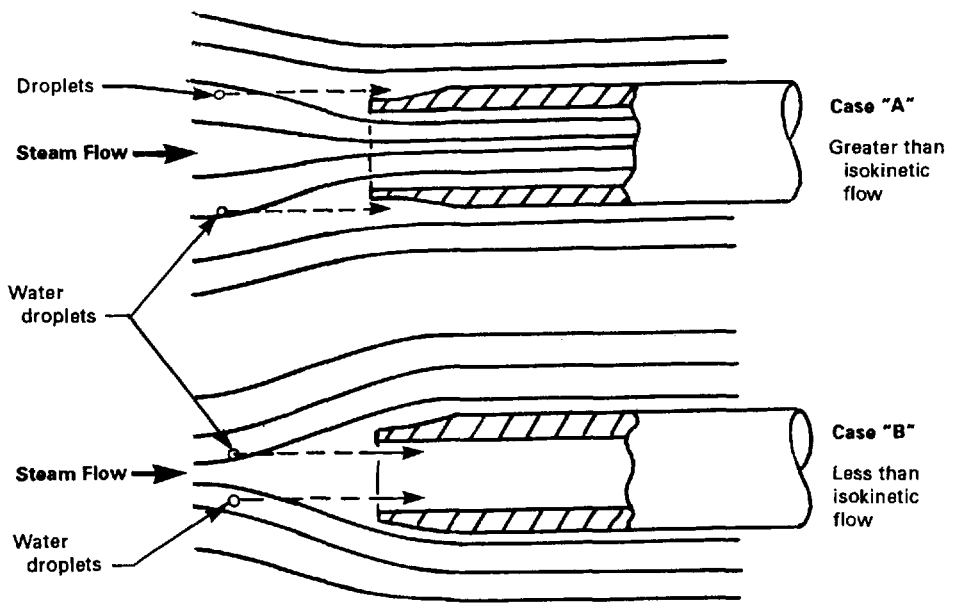

FIG. 3.2 EFFECTS OF NON-ISOKINETIC SAMPLING

mended by the boiler manufacturer or design engineer.

A single port nozzle is used for valid steam sampling when it is positioned at a known distance from the inside of the steam pipe where a highly predictable velocity profile exists. Typically, this would be where fully developed turbulent flow is achieved enabling the determination of velocity at any location in the steam pipe. Single-port, off-center nozzles, Fig. 3.3, are most representative when they are located at a distance of approximately 0.2R of the pipe. This is the location where the actual and average velocities are equal. (1)(3) Reference (1) lists other single-port nozzle configurations.

Multi-port nozzles which sample at various locations across the pipe cross section can also be used. These nozzles should be used only at locations where the velocity profile across the pipe can be determined. Reference (1) details information on port location, port sizing, and internal passage sizing for multi-port nozzles.

At least one boiler manufacturer equips most dry pans within the steam drum with a network of pipes for sampling saturated steam. (1)

Sample ports shall be drilled cleanly, using the standard drill size nearest to the calculated port diameter. The port inlet ends shall not be chamfered or rounded, and the outlet ends shall be free of

Copyright ASME International
Provided by IHS under license with ASME
No reproduction or networking permitted without license from IHS
Not for Resale

TABLE 3.1
MINIMUM STEAM VELOCITIES AT VARIOUS PRESSURES

Steam Pressure		Steam Flow	
psig	MPa	ft/s	m/s
100	0.69	195	59.6
200	1.38	141	42.8
300	2.07	114	34.8
400	2.76	95	29.1
500	3.45	83	25.3
700	4.83	70	21.2
1000	6.90	54	16.6
1500	10.34	36	11.0
2000	13.79	26	7.9
2500	17.24	18	5.5
2800	19.30	13	4.1

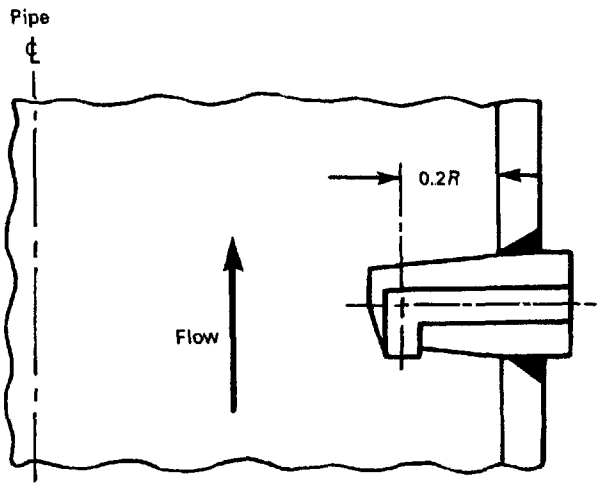

FIG. 3.3 TYPICAL SINGLE-PORT NOZZLE

burrs. The smallest recommended port diameter is $^1/_8$ in. (3.18 mm). Port diameters of less than $^3/_{32}$ in. (2.38 mm) are subject to plugging and shall not be used. Total port area shall be determined to maintain isokinetic sampling in the nozzle port(s) at the desired sampling rate and design steam flow.

Sampling nozzles shall be adequately supported and shall be designed to prevent failure due to flow-induced vibration, thermal stress cycling and other possible causes. Nozzles are most often made of AISI 316 or other austenitic stainless steel or alloy 600. Weld joints used for dissimilar metals are subject to high thermal stresses due to different coefficients of thermal expansion. Care should be used in weld rod selection and inspection of all dissimilar metal weld joints.

3.5 SUPERHEATED STEAM

Superheated steam is usually regarded as a single phase, which does not require isokinetic sampling. Most impurities in superheated steam are present in vaporous form and are thoroughly mixed with the steam vapor. However, superheater and reheater lines develop an oxide layer on the steam side which continues to increase in thickness. The physical properties of the oxide are different from the parent metal. Therefore, changing pressure and temperature cause the oxide layer to crack and exfoliate. (3)

High-pressure superheated steam has the ability to dissolve most contaminants. However, as steam pressure and temperature are reduced, many of the contaminants deposit on the inner surfaces of the nozzle and sample lines causing biased analytical results. (4)

3.5.1 Sampling Nozzles. The nozzles described for use with saturated steam can also be used for superheated steam. However, isokinetic sampling is normally not required for superheated steam unless particulates are measured.

In order to minimize the deposition of contaminants from superheated steam several experts currently recommend injecting condensed and cooled sample directly into the superheated steam sampling nozzle. Due to concern for induced thermal stresses, few power plants have installed nozzles with integral condensate injection. Reference (1) includes a description of a superheated steam nozzle with condensate injection.

3.6 REFERENCES

(1) Coulter, Earl E. "Sampling Steam and Water in Thermal Power Plants," presented at the Electric Utility Workshop at the University of Illinois, March 1988.

(2) Goldstein, P. and F.B. Simmons. "An Experimental Investigation of Factors Which Influence the Accuracy of Steam Sampling — Series II." Proceedings of the American Power Conference, XXVI (1964).

(3) Jonas, Otakar, Ravi K. Mathur, James K. Rice and Earl E. Coulter. "Development of Steam Sampling." EPRI Research Project 2712-8, June 1991.

Copyright ASME International
Provided by IHS under license with ASME
No reproduction or networking permitted without license from IHS

Not for Resale

(4) Cobb, R.V. and E.E. Coulter. "The Prevention of Errors in Steam Purity Measurement Caused by Deposition of Impurities in Sampling Lines," Proceedings of the American Society for Testing and Materials 61 (1961):1386-1395.

3.7 BIBLIOGRAPHY

Berry, W.E. and Diegle, R.B. "Survey of Corrosion Generation, Transport, and Deposition in Light Water Reactors," EPRI NP-522, Final Report, March 1979.

Stringer, J. "Steamside Oxidation and Exfoliation," McMaster University, May 4, 5, 1983.

Copyright ASME International
Provided by IHS under license with ASME
No reproduction or networking permitted without license from IHS

Not for Resale

SECTION 4 — TRANSPORTING THE SAMPLE

4.1 INTRODUCTION

Transporting the sample consists of conveying the sample from the sampling nozzle, where the sample is collected, to the location where sample conditioning (see Section 5) is accomplished. Samples flowing through sample lines can be affected in many ways; the longer the sample line, the more likely the sample is to be affected. Impurities in the sample stream may be affected by physical phenomena, such as deposition and erosion; thermodynamic changes, such as throttling and heat loss; and chemical and physical changes such as reactions of oxygen scavengers, crystallization, and sorption. The purpose of this Section is to identify such changes and to indicate how these changes can be minimized.

Almost any fluid flowing through a tube or stored in a container will leave or pick up some residue. All samples experience pressure drop as they flow through the sample line. Hot samples also have significant temperature changes resulting from heat loss from the tube surface.

This Section discusses transport of samples of superheated steam, saturated steam, and liquids including condensate and boiler water. Most often the superheated samples will lose the superheat within the sample tube. Frequently, saturated and superheated steam samples will fully condense within the sample tube. Design recommendations for liquid samples should then be applied to these condensed samples.

4.2 SAMPLE LINE CONSTRUCTION

The Power Piping Code, ASME B31.1, (1) applies to tubing outside the boiler setting but does not address tubing as small as is normally used for sample lines. The use of small tubing does not violate the Code; the Code simply does not address the use of small tubing. Therefore the designer is responsible for the sample line design. Reference (2) is a source of information for the design of small tubing systems.

4.2.1 Valves. Safety requirements and most construction codes require the use of root valves at the sample source. Safety considerations may also require double valves for high-pressure applications. Valves selected for root-valve service are likely to be larger and installed with heavier piping than the rest of the sampling line. This can result in deposition and release of material which will produce periodic bursts of particulate. Root valves should be selected with minimum bore diameters which will allow the sample velocity to approach 5 to 7 ft/s (1.5 to 2.1 m/s) which is recommended for other parts of the sample line.

Additional valves between the root valve(s) and the sample conditioning system are not recommended. When additional valves must be installed they should be selected to minimize flow disruptions and maintain flow velocities.

4.2.2 Material Selection and Preparation. The wall thickness and material shall be suitable for the temperature and pressure of the sample source and shall be of corrosion-resistant material. AISI 316 stainless steel is the preferred material which can be obtained in either seamless (ASME SA-213) or welded (ASME SA-249) construction. Reference (1) includes design formulas and allowable pressure-temperature rating data for stainless steel tubing with additional data available in Ref. (2). Tubing inside diameters should be selected based upon sample velocities and pressure drops as discussed in this Section. All fittings should be selected based upon their temperature and pressure ratings and be made of materials compatible with the sample lines and sample.

4.2.3 Installation. Sample lines shall be free of dead legs, particulate traps (such as strainers), and low velocity zones. Sample lines should be as short as practical. They shall be adequately supported to prevent fatigue failure from vibration, but free to expand and contract with temperature changes. Normally, sample lines should not be insulated. Where contact of personnel with hot lines is possible, suitable protection or guards shall be provided.

Copyright ASME International
Provided by IHS under license with ASME
No reproduction or networking permitted without license from IHS

Not for Resale

Sample tubing shall be protected from damage resulting from adjacent activities.

4.2.4 Fabrication. Welding of small diameter ($^1/_4$ in. (6 mm) to $^3/_8$ in. (10 mm) outside diameter) can result in burn-through with a significant reduction in the original bore. Care should be employed to minimize the shrinkage in all welded joints. Compression fittings from several reliable manufacturers can also be used. Tubing bends are recommended instead of right angle fittings. Right angle fittings have sharp changes in direction which result in high pressure drop and have increased probability of particle entrapment. Large radius tube bends are preferred.

Hacksaws and tubing cutters cause burrs that can restrict sample flow and may cause plugging. Burrs shall be removed before fittings are applied. Lines should be blown out with clean, oil-free air or flushed prior to installation to remove metal filings and shavings resulting from removing burrs.

4.3 DEPOSITION

Virtually any fluid flowing through a tube or stored in a container will leave or pick up some residue. The loss or gain of contaminants at the tube wall can cause biased results from chemical analysis. There are a multitude of factors which contribute to deposition on the tube wall. The most prominent mechanisms include crystallization resulting from solubility changes, settling resulting from gravity and hydrodynamic forces, and electrostatic attraction of charged particles to the tube wall. Reference (3) discusses in detail a number of theories related to deposition on fluid boundaries.

Settling results when particles are transported to the vicinity of the wall by fluid eddies and across the boundary layer by their inertia, diffusion, or gravity. Some of the particles which reach the wall stick to the wall. A theoretical "sticking probability" is used to determine whether the particle will deposit on the wall. Some particles which stick are later eroded from the wall by the fluid drag force. The eroded particles become re-entrained in the fluid stream. Both the rate of deposition and the rate of erosion are velocity dependent. Steady state deposit weights are at a minimum with liquid velocities at 5 to 7 ft/s (1.5 to 2.1 m/s). Minimum deposits are desirable because they reach equilibrium in a shorter period of time and are considered less susceptible to particulate bursts where an area of previously deposited material is swept into the stream.

The waters involved in power plant operation are stored in and transported through pipes and tubes of iron-bearing material. These waters contain various oxides of iron in colloidal form. The effluent from demineralizers may also contain colloidal particles of ion exchange resins. All colloidal material tends to form deposits as the fluid flows through pipes and tubes.

4.3.1 Sorption of Dissolved Species. Tube wall deposits are porous and tend to sorb appreciable amounts of dissolved species by ion exchange, absorption, adsorption, or other mechanisms. Therefore, when the deposit is disturbed by a change in velocity or other means, a particulate burst can occur that consists of not only deposit material but also dissolved species. These bursts can cause spikes in the output of analytical instruments and grab samples.

4.3.2 Crystallization. Most contaminants can be dissolved in superheated steam. However, as steam pressure and temperature are reduced, the solubility of many contaminants is decreased and the contaminants deposited on the inner surfaces of the containing tube. (4) This condition has been found to be prevalent only in regions of dry wall tube where the temperature of the tube wall exceeds the saturation temperature of the steam.

4.4 SATURATED STEAM

The preferred method to sample saturated steam is to condense the sample as near to the source as is possible, then size the condensate portion of the line to maintain the desired 5 to 7 ft/s (1.5 to 2.1 m/s) liquid velocity. Due to the lack of sufficient cooling water near the sample source, few plants currently employ source cooling. The vast majority of power generating stations cool their steam samples at a central sampling station, most frequently located in the chemistry laboratory. This practice has resulted in many sampling lines exceeding 400 ft (120 m) in length. The discussion which follows assumes that steam samples are cooled at an analysis panel which is remote from the sample source.

Note: It is strongly recommended that new and existing plants provide for source cooling of steam samples to maximize the ability to obtain a representative sample.

A saturated steam sample originates at the sampling nozzle as vapor with entrained liquid droplets. As flow proceeds down the tube, heat loss from the outside tube surface causes a liquid film to form

Copyright ASME International
Provided by IHS under license with ASME
No reproduction or networking permitted without license from IHS

Not for Resale

on the inside surface of the tube. The liquid film moves down the tube at significantly slower velocity than the steam vapor. The surface of the liquid has moving waves which vary with the liquid and vapor velocities. If the steam velocity is sufficiently high then droplets of liquid are entrained into the moving steam from the wave crests. Simultaneously, droplets carried by the steam flow impinge on the liquid film and become entrapped in it. The film thickness gradually increases with additional condensation. When the film reaches sufficient thickness the flow develops to slug or churn flow where large bubbles of steam flow faster than the accompanying liquid and bypass the liquid between the bubbles. Gradually the size of the bubbles decreases until all steam condenses and single-phase liquid flow results. If the sample line is short then all phases may not be encountered. (5) The term "condensing length" will be used to refer to the length of tube where the entire steam sample has condensed.

A second scenario can also occur with saturated steam samples. When the steam velocity entering the sample line is high then pressure drop can alter the flow characteristics of the sample. High steam velocity is accompanied by high pressure drop. The high pressure drop results in expansion of the steam which causes higher steam velocity with higher incremental pressure drop. This condition causes a compounding effect of both the velocity and the local pressure drop. Depending upon the steam pressure, a saturated steam sample can deviate from the saturation curve and enter the superheat region. Steam samples are usually at pressures where these conditions do not exist. However, combined cycle plants with multiple pressure heat recovery steam generators typically produce steam at pressures less than 500 psig (3.45 MPa). These samples will experience extremely high pressure drop which can be maintained only for shorter sample tube lengths [typically less than 200 ft (60 m)]. Longer sample lines will experience flow reductions which result in loss of flow.

4.4.1 Deposition. Saturated steam is less likely to form deposits inside sample lines than either liquid or superheated samples. Saturated steam has a large specific volume compared to the condensed liquid. The large volume of steam results in high steam velocities in properly designed sample lines. The high velocity steam is accompanied by fast moving liquid droplets which erode any deposits that tend to form.

Long sample lines can result in sufficient heat loss from the tube surface to condense the entire sample. This condition is most common at higher source pressures. Fully condensed samples and samples with low steam content have greatly reduced volume with accompanying lower velocities. Liquid sample velocities of less than 5 ft/s (1.5 m/sec) will promote deposition of particles which have the ability to sorb dissolved species. See Subsection 4.3. Such conditions shall be minimized by proper selection of sample line dimensions.

4.4.2 Sample Flow Rate. A change in flow rate of a saturated steam sample will result in a change in velocity at the steam inlet proportional to the change in flow rate. However, it will also result in a change in the condensing length. The various regions of two-phase flow will then shift along the sample line. Areas of tubing which have liquid flow at one flow rate will experience two-phase flow at a higher flow rate. Calculations indicate that flow rate changes of about 10 percent can cause velocity changes of a factor of two or three in regions near the fully condensed length. This region near the condensing length will experience "slug" flow with fluctuating velocities which will tend to scrub the wall of previously deposited material. Similarly, flow decreases will result in reducing the condensing length with liquid flow occupying portions of tubing which previously had "slug" or "bubbly" flow. Therefore, constant sample line flow should be maintained or results should be interpreted accordingly.

4.4.3 Steam Sample Line Sizing. Sample lines for saturated steam can best be designed by using a computer program. The computer program can determine heat loss and pressure drop for any flow condition. It can then determine changes resulting from expansion or differing flow regimes. Table 4.1 summarizes a series of calculations performed to size steam sample tubing. Three relatively standard tube sizes were evaluated at nine separate pressures for three flow rates of saturated steam and three flow rates of superheated steam at each pressure. All sample flow rates refer to cooled condensate at a temperature of 77°F (25°C).

Table 4.1 includes the following columns:

Max

L = maximum recommended length of tube for that pressure and flow rate. An "N.R." in this column indicates that this size of sample tube is not recommended for any length since the compounded pressure drop is excessive.

Copyright ASME International
Provided by IHS under license with ASME
No reproduction or networking permitted without license from IHS

Not for Resale

TABLE 4.1
RECOMMENDED SAMPLE TUBE SIZES (6)

(Used with permission—Sentry Equipment Co.)

			1/4" OD x .049" wall				3/8" OD x .065" wall				1/2" OD x .083" wall			
Pressure, psia	Condition	Sample Flow, cc/min	Max L, ft	Cond L, ft	Steam V_{max} ft/sec	Cond V_{min} ft/sec	Max L, ft	Cond L, ft	Steam V_{max} ft/sec	Cond V_{min} ft/sec	Max L, ft	Cond L, ft	Steam V_{max} ft/sec	Cond V_{min} ft/sec
2800	Saturated	1300	>700	190	39	7.1	>700	120	15	2.5	>700	90	8	1.3
	"	1000	"	140	30	5.2	"	90	12	1.9	"	70	6	1.0
	"	700	"	90	21	3.4	"	60	8	1.3	"	50	4	0.7
	1000°F	1300	>700	600	100	*	>700	250	39	2.7	>700	190	21	1.4
	"	1000	"	310	78	5.6	"	190	30	1.9	"	150	16	1.0
	"	700	"	200	55	3.5	"	130	21	1.3	"	100	11	0.7
2400	Saturated	1300	>700	310	53	7.4	>700	170	20	2.6	>700	130	11	1.3
	"	1000	"	210	41	5.2	"	130	16	1.9	"	100	8	1.0
	"	700	"	140	29	3.5	"	90	11	1.3	"	70	6	0.7
	1000°F	1300	150	*	120•	*	>700	300	47	2.7	>700	220	25	1.4
	"	1000	>700	400	93	5.9	"	220	36	2.0	"	170	19	1.0
	"	700	"	240	65	3.6	"	160	25	1.3	"	120	14	0.7
2000	Saturated	1300	250	*	87•	*	>700	230	27	2.6	>700	170	15	1.3
	"	1000	>700	290	55	5.4	"	170	21	1.9	"	130	11	1.0
	"	700	"	180	38	3.5	"	120	15	1.3	"	90	8	0.7
	1000°F	1300	N.R.	—	150•	—	>700	350	57	2.8	>700	260	31	1.4
	"	1000	300	*	100•	*	"	260	44	2.0	"	200	24	1.0
	"	700	>700	290	80	3.6	"	180	31	1.3	"	140	17	0.7
1750	Saturated	1300	150	*	140•	*	>700	270	33	2.6	>700	200	18	1.4
	"	1000	>700	420	66	5.6	"	200	25	1.9	"	160	14	1.0
	"	700	"	220	46	3.5	"	140	18	1.3	"	110	10	0.7
	1000°F	1300	N.R.	—	170•	—	>700	400	67	2.9	>700	290	36	1.4
	"	1000	150	*	130•	*	"	300	51	2.0	"	230	28	1.0
	"	700	>700	340	93	3.7	"	200	36	1.3	"	160	19	0.7
1500	Saturated	1300	N.R.	—	110•	—	>700	320	40	2.7	>700	240	22	1.4
	"	1000	180	*	110•	*	"	240	31	2.0	"	180	17	1.0
	"	700	>700	270	56	3.6	"	170	22	1.3	"	130	12	0.7
	1000°F	1300	N.R.	—	200•	—	>700	450	79	3.0	>700	330	42	1.4
	"	1000	N.R.	—	160•	—	"	330	61	2.0	"	250	33	1.0
	"	700	500	470	110	3.9	"	230	42	1.3	"	180	23	0.7
1250	Saturated	1300	N.R.	—	130•	—	>700	390	50	2.8	>700	280	27	1.4
	"	1000	80	*	130•	*	"	280	39	2.0	"	220	21	1.0
	"	700	>700	390	70	3.7	"	190	27	1.3	"	150	15	0.7
	1000°F	1300	N.R.	—	250•	—	>700	550	96	*	>700	380	51	1.5
	"	1000	N.R.	—	190•	—	"	390	74	2.1	"	290	40	1.0
	"	700	150	*	130•	*	"	260	51	1.3	"	200	28	0.7
1000	Saturated	1300	N.R.	—	170•	—	>700	500	65	3.0	>700	340	35	1.4
	"	1000	N.R.	—	130•	—	"	350	50	2.0	"	260	27	1.0
	"	700	N.R.	—	91•	—	"	230	35	1.3	"	180	19	0.7
	1000°F	1300	N.R.	—	320•	—	400	*	120	*	>700	440	65	1.5
	"	1000	N.R.	—	240•	—	>700	470	93	2.2	"	330	50	1.1
	"	700	N.R.	—	170•	—	"	300	65	1.3	"	230	35	0.7

Copyright ASME International
Provided by IHS under license with ASME
No reproduction or networking permitted without license from IHS

Not for Resale

TABLE 4.1 (Cont'd)
RECOMMENDED SAMPLE TUBE SIZES (6)
(Used with permission—Sentry Equipment Co.)

			1/4" OD x .049" wall				3/8" OD x .065" wall				1/2" OD x .083" wall			
Pressure, psia	Condition	Sample Flow, cc/min	Max L, ft	Cond L, ft	Steam V_{max} ft/sec	Cond V_{min} ft/sec	Max L, ft	Cond L, ft	Steam V_{max} ft/sec	Cond V_{min} ft/sec	Max L, ft	Cond L, ft	Steam V_{max} ft/sec	Cond V_{min} ft/sec
750	Saturated	1300	N.R.	—	230•	—	150	*	98•	*	>700	420	48	1.5
	"	1000	N.R.	—	180•	—	>700	480	68	2.2	"	320	37	1.0
	"	700	N.R.	—	130•	—	"	290	48	1.3	"	220	26	0.7
	1000°F	1300	N.R.	—	420•	—	N.R.	—	160•	—	>700	560	88	*
	"	1000	N.R.	—	330•	—	300	*	130	*	"	400	68	1.1
	"	700	N.R.	—	230•	—	>700	380	88	1.4	"	280	47	0.7
500	Saturated	1300	N.R.	—	360•	—	N.R.	—	140•	—	450	*	73	*
	"	1000	N.R.	—	270•	—	N.R.	—	100•	—	>700	420	56	1.1
	"	700	N.R.	—	190•	—	500	440	73	1.4	"	280	39	0.7
	1000°F	1300	N.R.	—	640•	—	N.R.	—	250	—	300	*	130	*
	"	1000	N.R.	—	500•	—	N.R.	—	190•	—	>700	550	100	*
	"	700	N.R.	—	350•	—	200	*	130	*	"	350	72	0.7

Cond

L = length where all steam has been condensed. An asterisk (*) in this column indicates that the steam was not fully condensed in the maximum recommended length.

Steam

V_{max} = maximum velocity of the steam in the recommended length. A bullet (•) after the value in this column indicates that the steam velocity is increasing due to expansion. Values shown with the bullet are taken at the maximum recommended length. The required initial steam velocity is shown for all values where the tube size is not recommended for any length.

Cond

V_{min} = velocity of the condensate at a 500 ft (154 m) length. Since the density of water varies with temperature, any sampling tube shorter than 500 ft (154 m) would have terminal velocities slightly higher than this value, longer tubes would have slower velocities. As above, an (*) in this column indicates that the steam is not fully condensed in the recommended length or has not condensed within 500 ft (154 m).

Note that the values in Table 4.1 are based upon tubing at the nominal inside diameter and are based upon straight tubing. A nominal amount of bends will be included in all sampling lines. If an unusual number of bends is used in any sampling line, allowance for the additional pressure drop should be made.

4.5 SUPERHEATED STEAM

Superheated steam samples originate at the sample source as a single-phase fluid with dissolved contaminants. Several studies (4) have shown that superheated steam samples deposit contaminants on the dry wall portion of the sample line where the tube wall temperature is above the saturation temperature of the steam. To minimize loss of contaminants it is recommended that superheat be removed from steam samples as soon as possible.

Note: It is strongly recommended that new and existing plants provide for source cooling of steam samples to maximize the ability to obtain a representative sample.

Most superheated steam samples will lose all superheat soon after the sample leaves the sampling port. Subsequent to this, these samples behave in the same manner as saturated steam samples discussed previously. Within the superheated region, these samples have higher velocities than the saturated steam samples. Table 4.1 includes recommended sample line sizes for several sample flow rates at pressures from 500 psia (3.45 MPa) to 2800 psia (19.3 MPa).

Copyright ASME International
Provided by IHS under license with ASME
No reproduction or networking permitted without license from IHS

Not for Resale

4.5.1 Recirculation System. One method to avoid deposition of contaminants on the dry tube wall is to inject a portion of the condensate from the superheated steam sample into the steam nozzle or as close to the nozzle as practical. As discussed in Section 3, water injection into the sampling nozzle is seldom employed due to concern for high thermal stresses within the sampling nozzle.

Experience with vaporous carry-over of silica in saturated steam shows that if the silica in the steam is kept sufficiently low, no silica deposits on the turbine. (7) It has been suggested that if the concentrations of impurities in superheated steam are sufficiently low, objectionable deposits of impurities on sample lines will not occur. Because superheated steam contains several types of impurities and each impurity has its own solubility characteristics, the present state of the art is not sufficient to predict whether or not sample recirculation is necessary. Even though the superheated steam sample presents difficulties, efforts should be made to extract and transport the most representative sample possible. If an accurate measurement is required to determine whether or not a turbine manufacturer's specification for steam purity is being met then the validity of the steam sample must be established. Reference (4) includes a test which can be performed to determine whether a recirculation system is required.

4.6 LIQUID SAMPLES

Sample lines for liquid samples should be sized to maintain the sample velocity at 5 to 7 ft/s (1.5 to 2.1 m/s). This velocity range will result in deposit weight reaching equilibrium after approximately 30 days of stable operation. This range is considered optimum to reduce sample line deposits and provide samples with moderate time delay. Reference (3) shows the effects of various fluid velocities on equilibrium deposit weights and the time periods needed to establish equilibrium.

4.7 REFERENCES

(1) ASME B31.1 *Power Piping,* 1995 ed. The American Society of Mechanical Engineers.

(2) Callahan, F.J. "Swagelok® Tube Fitter's Manual." Published by the Crawford Fitting Company.

(3) Berry, W.E. and R.B. Diegle, "Survey of Corrosion, Generation, Transport, and Deposition in Light Water Reactors." EPRI NP-522, Final Report, March 1979.

(4) Coulter, Earl E. "Sampling Steam and Water in Thermal Power Plants." Presented at the Electric Utility Workshop at the University of Illinois, March 1988.

(5) Rommelfaenger, E. "Design Criteria for Steam Sample Lines." Presented at the EPRI Fourth International Conference on Cycle Chemistry in Fossil Plants, September 1994.

(6) Two Phase Flow Models for Sample Line Sizing, a computer program by Sentry Equipment Corp., Copyright 1995.

(7) Heitmann, H.-G. Glastech.Ber. 38(2): 41 (1965).

Copyright ASME International
Provided by IHS under license with ASME
No reproduction or networking permitted without license from IHS

Not for Resale

SECTION 5 — SAMPLE CONDITIONING

5.1 INTRODUCTION

5.1.1 Overview. The objective of water and steam sample conditioning is to modify and control sample temperature, pressure, and flow rate from the sample source to delivery for grab sampling or on-line analysis. This conditioning must be done safely and most importantly, achieved so as to ensure that the sample is truly representative of the system condition at the point(s) of sampling. Trace analysis (ppb-μg/L) requires special considerations to maximize the probability that measured results truly reflect the existing conditions in the system at the time of sampling.

Sections 3 and 4 discuss the proper methods for obtaining and transporting the sample. This Section discusses the requirements of various sample system components and their appropriate application and possible impact on sample quality. General reference is directed to ASTM standards providing additional information on this subject. (1)(2)(3)(4)

5.1.2 Definitions

back pressure regulator: device designed to maintain a constant pressure upstream of itself (variable or fixed back pressure regulators are available) to maintain constant pressure to the analyzer flow control valves

head cup: method used to achieve constant pressure (see back pressure regulator). Incorporates plumbing of the sample to a selected height above the analyzers to provide a constant inlet sample pressure. The sample flow is delivered to an elevated cup with an overflow to maintain constant head pressure to the analyzers as long as sample flow to the head cup is greater than the outlet flow to other analyzers and the grab sample. Head cups are sometimes used with colorimetric analyzers to minimize particulate-induced spikes. See para. 5.9.7.

Note: In recent years, highly sensitive back pressure regulators have become the standard method of sample pressure control. Sample pressure requirements and head height limitations also restrict application of the head cup pressure control method and therefore it is not recommended.

pressure reducer: device designed to reduce pressure, and therefore control flow, of the cooled sample to a controllable pressure

sample cooler: small heat exchanger (usually with a high pressure rating) used to cool sample streams

variable rod-in-tube orifice: type of pressure reducer that uses a retractable tapered rod inside a reamed tube to provide a variable orifice for pressure reduction parallel with sample flow while allowing retraction for cleaning of crud bursts.

5.2 MATERIALS

In high-purity sampling, the sampling lines and major sampling components within the sample conditioning system should be made of stainless steel when practical. Non-leaching plastics and glass components for measuring flow, holding resin, etc. can be used as required. Pressure and temperature ratings should be selected based on the specific service of the component.

Note: Some sample transport materials can be permeable to CO_2 and O_2. Care should be taken when selecting these materials.

5.3 VALVES AND FITTINGS

5.3.1 Isolation Valves. An isolation valve shall be located at the inlet to the sample conditioning system and/or at the sample cooler inlet. The valve rating shall be compatible with the pressure/temperature of the sample source. See Section 4 for information on root valves.

5.3.2 Pressure Reducers. Pressure reducers shall be located downstream of the primary sample cooler so that the liquid is sub-cooled before pressure reduction. For samples equal to or greater than 500 psig (3.45 MPa), the pressure reducer should be a rod-in-tube type orifice (variable or fixed) or a capillary tube. Variable rod-in-tube devices are recommended since they provide for varying the pressure drop and, therefore, the flow; and are cleanable in place. Also, this method of pressure reduction

Copyright ASME International
Provided by IHS under license with ASME
No reproduction or networking permitted without license from IHS

Not for Resale

eliminates the possibility of sample bias due to the potential dissociation of water into hydrogen and oxygen that can occur across throttling valves when sampling at high pressures. (5) Forepressure regulators are not recommended for large pressure reductions because of susceptibility to erosion, water dissociation and wire drawing of the stem or seat. For samples less than 500 psig (3.45 MPa), the pressure reducer should be a needle valve or forepressure regulator. A needle valve is preferred since it will not hunt with small pressure variations.

5.3.3 Pressure Regulators. Pressure and flow regulation for on-line analysis is essential for proper instrument performance and repeatability. This is achieved by establishing a constant pressure zone where the sample line feeds the analyzer branch lines. Because of the relationship of pressure and flow, this constant pressure zone ensures that each analyzer fed from this zone gets a constant flow rate independent of actions taken in the other branch lines, while maintaining constant flow in the main sample line. This is necessary for a representative sample (see Section 4). To achieve this constant pressure zone in conjunction with the upstream pressure reducer, a back pressure regulator (fixed or variable) is required. A head cup will provide the required constant pressure zone, but is not recommended for sample pressure control upstream of the analyzers (see para. 5.1.2).

Note: A forepressure regulator without a back pressure regulator or head cup is not recommended. A forepressure regulator alone cannot provide a constant sample line flow. Flow changes in the branch lines below the regulator result in the forepressure regulator closing or opening to maintain the analyzer inlet pressure thereby changing the main sample line flow. The sample ceases to be representative. Use of a back pressure regulator is the highly preferred method to achieve the constant pressure zone.

5.3.4 Blowdown Valves. Blowdown/flushing valves may be used to purge sample lines that are not in continuous service or where suspended-solids deposition affects the sample. The blowdown/flushing valve can be located prior to or after the sample cooler. If it is located after the sample cooler it should be located downstream of the pressure reducer. The advantage of locating the blowdown/flushing valve after the sample cooler and pressure reducer is that this allows for full exercise of the pressure reducer and also flushes the sample cooler itself. This can be important in the analysis of trace metals. A regulating type valve rated for the sample source pressure and temperature should be selected for applications prior to the sample cooler. High-pressure service ball valves shall be used for blowdown/flushing after the sample cooler.

5.3.5 Other Valves. Other valves should be selected based on specific requirements and be evaluated for their pressure/temperature service, e.g., analyzer flow metering, secondary isolation, grab sampling, sample sharing, etc.

5.3.5.1 Ball Valves. Ball valves are usually used for low pressure blowdown, sample sharing or other on/off applications where a diversion of sample flow is required. In some low-pressure sample applications, e.g., LP steam of a combined cycle plant, ball valves are sometimes used for isolation to reduce sample pressure drop when limited sample pressure is available.

Note: Selecting a ball valve for grab sample use without a flow metering valve in series with it can starve the constant pressure zone created by the back pressure regulator and disrupt sample flow.

5.3.5.2 Sample Relief Valves. Each sample line should be provided with a method to protect components from over-pressurization. Acceptable methods include suitable back pressure regulator with built in relieving capacity, head cup or suitable relief valve located downstream of the pressure reducer and primary sample cooler.

Note: If a relief valve is used, it shall be positioned so that no dead leg is present thereby avoiding contamination of the flowing sample.

5.3.5.3 Cooling Water Valves On Sample Coolers. Each sample cooler should have an inlet (isolation) and outlet (throttling and isolation) valve. All cooling water flow adjustments should be made with the outlet valve so that the maximum available cooling water pressure is available to the sample cooler.

CAUTION:
(1) The sample cooler shell needs to be protected from over pressurization if it is inadvertently isolated when sample flow is present or the sample tube ruptures. The design of the piping shall provide a means of drainage or expansion of the cooling water should these conditions occur. Recommended methods include a three-way diverting ball valve installed such that the flow to the shell cannot be isolated (cooling water or relief/vent) or a relief valve installed between the cooler shell and the isolation valve.
(2) Loss of cooling water flow can cause serious damage and corrosion and become a safety hazard.

5.3.6 Fittings. It is always preferable to use bends rather than fittings to change direction of sample tubing. Compression or socket weld fittings for sample lines should be selected based on application and servicing needs. Because improperly welded

Copyright ASME International
Provided by IHS under license with ASME
No reproduction or networking permitted without license from IHS
Not for Resale

joints are susceptible to plugging by suspended solids, compression fittings are preferred.

5.4 SAMPLE COOLERS

High efficiency sample coolers used for primary temperature reduction/condensation shall be designed for the pressure/temperature of the sample source. They should be capable of reducing the incoming sample temperature to less than 5°F (2.8°C) of the cooling water inlet temperature for water samples and 10°F (5.6°C) of the cooling water inlet temperature for steam samples at representative sample flows. Cooling water requirements should be as low as possible to conserve water resources and cost. Sample coolers used for secondary cooling shall be capable of a 1°F (0.5°C) approach to the chilled water temperature. The tube through which the sample will flow shall be continuous.

The cooler tube shall be made of stainless steel preferably AISI 316. Specific water chemistry could dictate different materials for improved corrosion resistance, e.g. Alloy 600 for high chlorides in the cooling water. The sample cooler shell containing the cooling water should be designed to provide adequate cooling water velocity to achieve required sample cooler efficiency as noted above, and be made of material that is corrosion resistant to the cooling water in use. Materials that have corrosion resistance to the ambient atmosphere around the sample cooler should also be considered to avoid exterior corrosion.

5.5 FLOW METERS

A visual means of reading and setting total and analyzer branch sample flow(s) is essential. Rotameters or other mechanical or electronic flow measuring devices are suitable. The rotameter shall be made of materials that are corrosion resistant and not reactive with the sample. For total sample flow, this is the only way to insure that the sample is flowing at a velocity that assures a representative sample.

Note: Care should be taken during installation and maintenance to ensure that there is no air in-leakage from the flow measuring device.

5.6 SAMPLE FILTERS

Sample filters can trap particles and may reduce plugging but also affect sample analytical results and are not recommended. Proper sample system design and representative flow should avoid plugging problems. Use of sample filters should, therefore, be closely evaluated, and if found necessary, only be installed in the specific analyzer branch line needing filtration.

5.7 PRESSURE AND TEMPERATURE GAGES

Gages of the appropriate material and service ratings should be strategically used to verify sample temperature and pressure in the sample system. Ranges should be selected so that normal readings are between 30% to 70% of full scale.

5.8 PUMPS

Samples of hotwell condensate, and other low pressure water and/or steam (after condensing) samples may likely require the use of a pump to provide adequate sample pressure. Small centrifugal pumps (sealless or canned), magnetically coupled gear pumps or diaphragm pumps using stainless steel construction are acceptable. Capability to handle low Net Positive Suction Head (absolute) [NPSH(A)] is required.

5.9 SAMPLE CONDITIONING METHODOLOGY

5.9.1 Typical Sample Line. Figure 5.1 shows a typical sample line for high pressure service. A low pressure line [below 500 psig (3.45MPa)] would be similar except a needle or metering type valve would be substituted for the pressure reducer. This typical component line-up provides for complete sample conditioning for pressure, temperature and flow, assuring a highly representative sample. See notes to Fig. 5.1 for additional information.

5.9.2 Sample Line Flushing. The sample system requires high velocity flushing during system startups to remove the potentially large amounts of suspended material which often enter the sample system during this operational phase. If a sample system design cannot provide the sample flow velocity that maintains a clean and stable system in normal operation, then provision shall be made for periodic high velocity flush to minimize suspended solids deposition.

If sample flow velocity is low, as the result of a throttled valve or other restriction, concentrated slugs of suspended particulate can form a plug at these

Copyright ASME International
Provided by IHS under license with ASME
No reproduction or networking permitted without license from IHS

Not for Resale

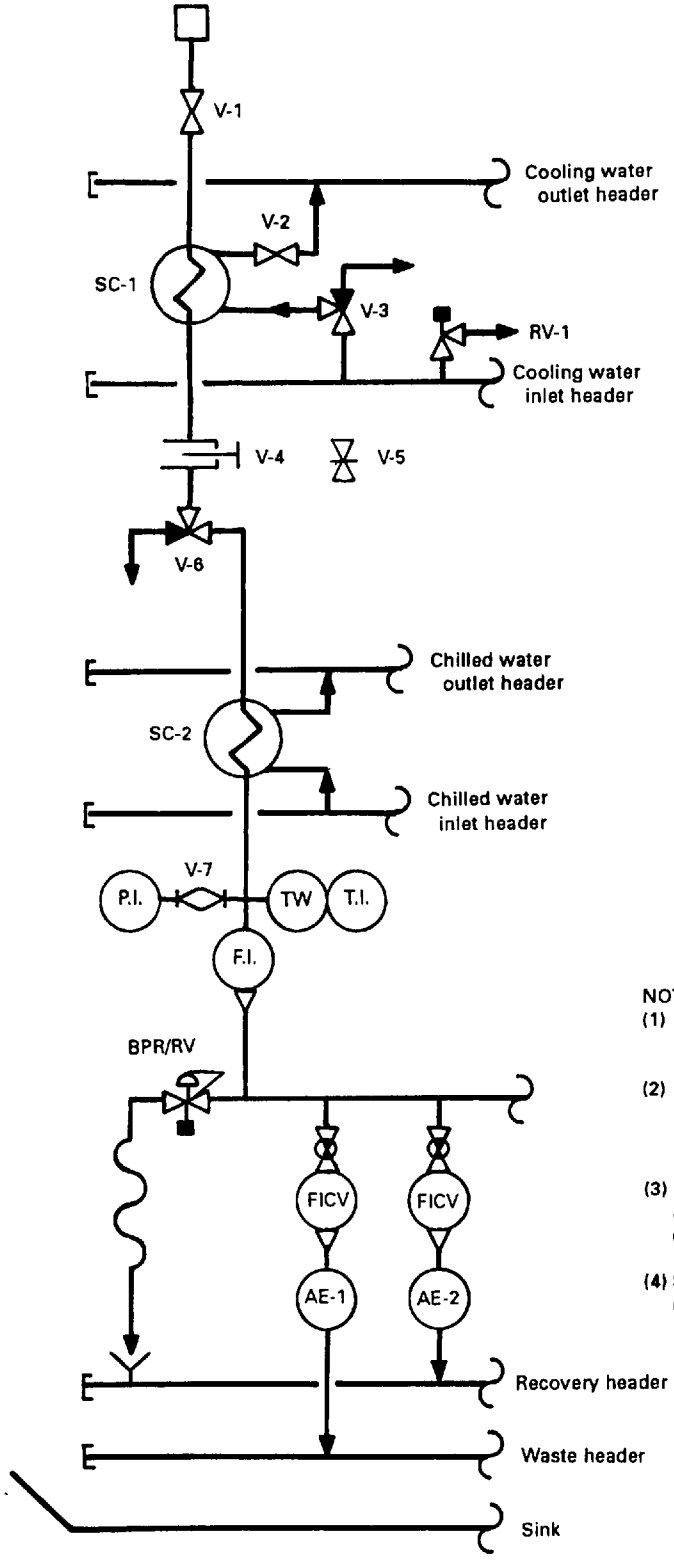

V-1 = sample isolation valve
V-2 = cooling water throttling/isolation valve
V-3 = cooling water diverting/isolation valve
V-4 = high-pressure pressure reducer
V-5 = low-pressure pressure reducer
V-6 = 3-way sample blowdown valve
SC-1 = primary sample cooler
SC-2 = secondary sample cooler
V-7 = pressure gage isolation valve
F.I. = total flow indicator
P.I. = pressure indicator
TW = thermowell
T.I. = temperature indicator
BPR/RV = back pressure regulator/relief valve
FICV = valved flow indicator(s)/controller(s)
AE-1 = analytical element with effluent to waste
AE-2 = analytical element with effluent to recovery
RV-1 = cooling water header relief valve

NOTES:
(1) If the combination BPR/RV is not used, a sample relief valve upstream of the last valve that can be isolated must be included.

(2) Cooling water isolation for primary sample cooler can be accomplished as shown or in other ways. Isolation method must allow for shell side relief of the sample cooler.

(3) High pressure blowdown at the sample panel inlet is also acceptable but does not allow blowdown of the primary sample cooler and pressure reducer.

(4) Secondary sample cooler does not normally require chilled water isolation valves. Isolation valves can be added if required.

FIG. 5.1 TYPICAL SAMPLE LINE FOR HIGH PRESSURE SERVICE

Copyright ASME International
Provided by IHS under license with ASME
No reproduction or networking permitted without license from IHS

Not for Resale

locations and cause total sample flow stoppage. This is a common problem during process system startup.

Nearly all sample system pluggage can be prevented by a sample system design that provides the means for an unrestricted sample-flush flow path from root valves to the grab sample sink (blowdown valve after sample cooler), bypassing on-line analyzers and secondary sample coolers.

Note: On-line analyzers should be isolated to prevent particulate fouling during system startup.

5.9.2.1 Suggested Start-up Procedure for Sampling System. The simple but useful procedure of beginning each startup by flushing each sample line to the sample sink, provides an awareness of materials being carried from the sample system during startup.

CAUTION: When performing a high velocity flush of high pressure samples, primary sample cooling capacity may be temporarily exceeded. It is necessary to monitor the sample outlet temperature from the primary sample cooler, and reduce flushing flow before outlet temperatures become excessive.

(1) Temporarily isolate sample flow to on-line analyzers to protect them against particulate fouling.

(2) Position the 3-way sample ball valve to route sample flush to the sink.

(3) The sink area receiving the sample should be clean and polished free of stains to aid detection and visual evaluation of small amounts of entrained solids.

(4) Open the Pressure Reducer at the outlet of the primary sample cooler. Monitor sample line temperature.

(5) Expect to see a darkening of the sample discharge to the sink as particulate is released in the sample line. Observing the sample line flush to the sample sink is useful in evaluating flushing characteristics of the sample line.

(6) When the sample clears, continue the flush for several volume changes or as the primary sample cooler outlet temperature permits. Reduce the bulk sample flow to normal, close the flow adjusting valve, reposition the 3-way ball valve to route normal sample flow to on-line analyzers, and commence normal sample system operation.

(7) Verify that the sum of sample flows to analyzers and bypass to recovery or waste is sufficient to achieve the desired 5 to 7 ft/s (1.5 to 2.1 m/s) velocity in the sample line or, if this is not achievable, the maximum sustainable sample flow rate the system will deliver. See Section 4, Table 4.1.

As noted earlier, a sample line designed for sample velocity in the range of 5 to 7 ft/s (1.5 to 2.1 m/s) is in a constant state of flush during normal operation and contributes to minimal sample bias. The possibility of sample line plugging during startup conditions is minimized by proper valve alignment to avoid flow restrictions during sample line startup and flush.

Sample drains shall be sized to accommodate the total amount of waste water exiting the panel during sample flush operations to ensure on-line monitors are unaffected.

5.9.3 Establishing and Verifying Sample Line Flow and Conditioning. To determine proper sample line flow based on line size and recommended sample velocity see Section 4. Once the proper main line sample flow is known, the flow is achieved by adjusting the pressure reducer until the flowmeter reads the required flow. Verify that the backpressure regulator is operating properly by adjusting downstream flow in one of the branch analyzer feed lines. As this flow is adjusted the main line sample flow should not vary. (See para. 5.3.3.) Check that the primary cooler is adequately reducing the sample temperature at the established flow rate. Cooling water temperature and flow to the cooler should be checked if the sample outlet temperature is too high. Assure that the secondary cooling system is receiving an adequate flow of chilled water.

5.9.4 Importance of Secondary Cooling. Secondary sample coolers provide trim cooling of samples to the standard temperature of 77°F (25°C) prior to on-line analysis and grab sample collection. This is the only way to ensure repeatable and accurate results, especially for pH and conductivity at low levels of analytical sensitivity. On-line analyzers typically include temperature compensation to correct for sample temperature variations and algorithms to estimate corrections for high purity water chemistry. However, this compensation may not provide proper correction for varied water chemistries and is highly dependent on the accuracy of the temperature measurement itself. (6) For these reasons and for greatest accuracy, trim cooling should be accomplished to within ±1° of standard temperature. This, when coupled with automatic temperature compensation in the analytical instrument, will minimize temperature induced bias in the measurements.

Note: Laboratory instruments usually require manual correction for water chemistries even when equipped with automatic temperature compensation.

Secondary or trim sample coolers should be individual coolers as detailed in Subsection 5.4. Chilled cooling water shall be treated demineralized water supplied from a precision temperature-controlled

Copyright ASME International
Provided by IHS under license with ASME
No reproduction or networking permitted without license from IHS

Not for Resale

chilled water system. Although secondary sample cooling coils can be immersed in a water bath with high volume chilled water flow, accurate temperature control is not easily achieved unless all incoming samples are near the same temperature.

5.9.5 Grab Sampling. The grab sample should be taken from the same continuous flowing stream that feeds the on-line analyzers, i.e., the constant pressure zone detailed in para. 5.3.3. A separate branch line with a metering valve and on/off ball valve may be used to take the grab sample. Another method, that assures a continuously flowing sample with no dead legs, is to use the discharge of the back pressure regulator. In addition to providing a grab sample in a state of continuous rinse, this method reduces components and system cost.

5.9.6 Analyzer Verification (Patch Panel). Quick connects provide the capability of switching samples from one on-line analyzer to another.

Quick connects allow the operator to:

(1) Verify analyzer performance by switching two different samples to their opposing analyzers (e.g., verify hotwell and economizer pH monitors by switching hotwell and economizer samples).

(2) Perform simultaneous routing of a high purity sample to two similar analyzers to set relative zero settings during calibration (e.g., split a condensed saturated steam sample to two sodium analyzers to establish low-end calibration in the 1.0 ppb range).

(3) Reroute sample to an alternate analyzer in the event of instrument failure.

The use of a quick-connect patch panel for instrument verification and extended monitoring, provides simple but highly effective trouble shooting and quality assurance evaluation of on-line instrumentation. Cross-connecting to an alternate analyzer for signal verification requires spare, extended length connecting tubes for these special occasions.

Note: Flexible tubing can affect sample. See Subsection 5.2.

CAUTION: When quick connects are used to interchange water samples to on-line analyzers, this information must be duly noted on data loggers and continuous recorders.

5.9.7 Colormetric Analyzer Bypass. A head cup can be dedicated to a single analyzer (preferred) and installed downstream of the analyzer by means of a close-coupled tee at the inlet to the analyzer cabinet. The head cup ensures constant pressure and allows high volume flow through the supply tubing and metering valve to effectively maintain sample velocity to the analyzer. This mode minimizes the impact of particulate bursts on the analyzer, eliminates the possibility of excessive sample flow flooding the analyzer cabinet and accelerates analyzer response time. The next larger sample tubing size should be used from the analyzer inlet tee to the downstream head cup to assure that the inlet pressure is unaffected by a change in sample flow rate.

5.10 REFERENCES

(1) Practice for Sampling Steam, ASTM D 1066.

(2) Practice for Sampling Water in Closed Conduits, ASTM D 3370.

(3) Standard Specification for Equipment for Sampling Water and Steam in Closed Conduits, ASTM D 1192.

(4) Practice for Flow Control and Temperature Control for On-line Water Sampling and Analysis, ASTM D 5540.

(5) Dickinson, N.L., W.A. Keilbaugh, and F.J. Pocock, "Some Physico-Chemical Phenomena In Supercritical Water." ASME Paper No. 58-A-267.

(6) Morash, K.R., R.D. Thornton, C.H. Saunders, A.C. Bevilacqua, and T.S. Light, "Measurement of the Resistivity of High-Purity Water at Elevated Temperatures." *Ultrapure Water* (December 1994) 18-22.

Copyright ASME International
Provided by IHS under license with ASME
No reproduction or networking permitted without license from IHS

Not for Resale

SECTION 6 — SAMPLE ANALYSIS AND INSTRUMENTATION

6.1 OVERVIEW

The purpose of this Section is to provide general definitions, applicability, and analytical methods for the sampling criteria detailed in Section 2. Analyses reviewed and suggested in this Section should not be construed to be the only methodology available to achieve the results or determine system performance. Information on analytical methods is found in each definition. Other methods might be available and local analytical chemistry specialists can and should be consulted to determine specific requirements.

6.1.1 Definitions. In this Section, various terms relating to water analysis will be used which may not be familiar to the reader, therefore definitions of these terms are being provided in the following paragraphs:

AVT: all volatile treatment; usually meaning treatment composed of ammonia, morpholine or other neutralizing amines, and hydrazine or other volatile oxygen scavengers, which leave no solids on evaporation

chemical absorption spectrophotometry: quantitative procedures devised to relate absorption at a selected wavelength to the number of the species of interest in the optical path

electrical conductivity: the reciprocal of the resistance in ohms measured between opposite faces of a centimeter cube of an aqueous solution at a specified temperature

flame emission spectroscopy: a flame photometric technique in which a solution containing the sample to be analyzed is optically excited in an oxyhydrogen or oxyacetylene flame. Relaxation of the atomized particles to their ground states produces emission spectra which serve as the basis for qualitative and quantitative analysis. Emission spectra can arise from several types of particles including atoms, ions, small molecules, and radicals.

furnace atomic absorption spectroscopy: an analytical technique based on the absorption of electromagnetic radiation by atomic particles. This technique, along with other spectral methods, requires that the sample be atomized, a process in which the sample constituents are decomposed and converted to gaseous elementary particles (atoms or ions). The absorption spectrum of the resulting atoms or ions then serves as the basis for qualitative and quantitative analysis for the elements contained within the sample. Furnace AA spectroscopy employs an electrothermal method of sample atomization. This type of atomization provides enhanced sensitivity compared with flame methods of atomization.

ion exchange: a reversible process by which ions are interchanged between an insoluble material and a liquid. Ion-exchange material has the ability to exchange reversibly certain ions in its structure or attached to its surface as functional groups, with ions in surrounding medium. These ion-exchange materials may be cationic or anionic, and are capable of reversible exchange of positively charged ions or negatively charged ions, respectively.

ion exchange membrane: a membrane made from an ion-exchanging polymer for the purpose of removing ion constituents from aqueous solutions. The use of ion exchange membrane requires the transfer of ions to the membrane polymer which returns an equivalent number of ionic species stored on the membrane.

ion selective electrode: an analytical technique for measuring ionic constituents primarily in aqueous solutions. This technique is based on the measurement, using a specific ion meter, of a potential that is developed across a thin membrane due to a difference of concentration of a specific ion on both sides of an ionically conducting layer. The concentration within the electrode is fixed and the potential varies with the concentration of ions in the sample.

membrane filter: a membrane used in a separation process for water purification or as an analytical device for the detection of suspended solids or dissolved ionic constituents

Copyright ASME International
Provided by IHS under license with ASME
No reproduction or networking permitted without license from IHS

Not for Resale

oxygenated treatment: a water treatment technique used primarily for supercritical and subcritical once-through fossil-fired boilers. This treatment involves the use of oxygen at near neutral or slightly alkaline pH in high purity condensate/feedwater (<0.15μS/cm cation conductivity). The principal advantage of the treatment is the reduction of pre-boiler corrosion and a subsequent reduction in transport of corrosion products to the boiler.

time sharing: the use of a single analyzer receiving two or more separate sample streams on a time share basis.

TOC: Total Organic Carbon. See para. 6.2.21.

6.1.2 Test Method Details. Test methods listed do not include descriptive information regarding common laboratory equipment such as beakers, graduated cylinders, volumetric flasks, crucibles, casseroles, Erlenmeyer flasks, etc., as it is assumed that the laboratories using this text will be well supplied with such equipment.

Note: Listed ASTM standards (1) include precision and bias statements in each method. For other methods, ASME cannot comment on the precision and bias of the listed equipment.

Common abbreviations used in the methods will be as follows:

mm = millimeter
cm = centimeter
mL = milliliter
L = liter
mg/L = milligrams per liter = ppm
ppm = parts per million
μ*g/L* = micrograms per liter = ppb
ppb = parts per billion
μ*S/cm* = microsiemens per cm

6.1.3 Purity of Water and Reagents

purity of water: unless otherwise indicated, references to water shall be understood to mean Type II reagent water conforming to ASTM Specification D1193. Essentially, Type II is described as having maximum electrical conductivity of 1.0 μS/cm at 25°C, although other qualities such as TOC, sodium, chlorides, and total silica may also be specified. Type II rather than Type III has been specified mainly to qualify as reagent water to be used in determining low levels of silica (10 μg/liter). The user should consult the analytical method for the proper reagent water quality required.

purity of reagents: ACS reagent grade chemicals shall be used in all tests, where such specifications are available. Other grades may be used provided it is first ascertained that the reagent is of sufficiently high purity to permit its use without lessening the accuracy of the determination. See ASTM Standard Practice E200 for further details and for preparation, standardization, and storage of standard solutions.

6.1.4 Sample Guidelines

Note: Reference Sections 3, 4, and 5 regarding appropriate sample conditioning and transport procedures to ensure representative sample quality.

6.1.4.1 Grab Sample Analysis. Grab samples should be taken from continuously flowing streams and not from any dead leg in the sample conditioning system. Prior to grab sample analysis for metals, blowdown of the sample line in accordance with the procedures detailed in Section 5 should be conducted.

While a grab sample represents the conditions existing only at the point and time of sampling, it shall be the goal of the sampler to collect a sample that is representative of the main body of the water sampled. The necessary details to extract this representative sample are described in Section 2. It should be recognized that there are a number of critical factors necessary to achieve a representative sample, namely point of sampling, time of sampling, equipment used in extracting the sample, proper sample line design (see Section 4), and sample conditioning (see Section 5).

6.1.4.2 On-Line Sample Analysis. On-line chemical analysis requires proper sample conditioning, particularly constant flow, to assure the repeatability and accuracy of the analysis. Constant sample temperature also improves all on-line analysis.

On-line sample analysis (continuous and/or integrated methods of sampling) has the advantage of showing continuous analytical results to reveal normal operating trends and rate/range of upset or abnormal conditions.

On-line analyzers should be checked for accuracy on a regular basis and be calibrated in accordance with manufacturer recommendations. Manufacturers of on-line analyzers will generally specify a flow rate range and maximum pressure for proper equipment operation. Ensure that these requirements, in addition to constant flow and regulated temperature of the sample, are met. Applicable practices for sampling include ASTM D-1066, D-1192, D-3370, D-5540, and D-4453.

6.1.4.3 Time Sharing of Instruments. Time sharing is the use of a single analyzer receiving two or more separate sample streams on a time share basis. Some benefits include:

Copyright ASME International
Provided by IHS under license with ASME
No reproduction or networking permitted without license from IHS

Not for Resale

(a) Time sharing of samples reduces the number of analyzers required to monitor a system, eliminates possible error between analyzers, and provides a comparison of relative values between two or more streams. For example, a single sodium analyzer, alternating between condensate polisher inlet and outlet, can resolve the onset of exhaustion with fractional ppb precision. This is not possible with two independently calibrated analyzers.

(b) Colorimetric analyzers are subject to upscale "zero" drift, generally caused by colorimeter cell fouling. Time sharing boiler water samples with steam and/or feedwater samples allows assessment of instrument performance by visual inspection. This will identify relative zero, and expose zero shift when both values migrate upscale by equivalent amounts. Relative zero can be reestablished without removing the analyzer from service. For this example, a silica analyzer monitors boiler water, an adjacent hydrazine analyzer monitors feedwater. Automatic switching of samples on a timed cycle allows boiler water silica to be rinsed down with feedwater to relative zero while the hydrazine analyzer rinses down with boiler water to a relative zero hydrazine value.

(c) Some examples of samples that benefit from time sharing the same analyzer are as follows.

(1) Sodium:

(a) Condensate Pump Discharge vs. Condensate Polisher Outlet.

(b) Condensate Polisher Outlet vs. Saturated Steam.

(c) Demineralizer Water Makeup vs. Saturated Steam.

(2) Silica:

(a) Boiler Drum Water vs. Feedwater.

(b) Demineralizer Mixed Bed Effluent vs. Strong base Anion Effluent.

(3) Hydrazine and Silica:

(a) Feedwater and Boiler Water alternately cycle to Hydrazine and Silica Analyzers.

The following are time shared in order to achieve the precision between samples necessary to detect differences that would otherwise be masked by the normal range of variation of independent analyzers.

(4) Dissolved Oxygen:

(a) Low Pressure Heater Drains vs. Condensate Pump Discharge.

(b) Deaerator Inlet vs. Deaerator Outlet.

(5) pH:

(a) Condensate Pump Discharge vs. Condensate Polisher Outlet.

(6) Specific Conductivity:

TABLE 6.1
ALKALINITY

Method	Usage: On-Line	Usage: Grab	Comments
Titrimetric (ASTM D514) (Hydroxide ion in water)		X	

(a) Condensate Pump Discharge vs. Condensate Polisher Outlet.

6.1.4.4 Data Collection. Results from both grab sample and on-line analysis at time of sampling should be collected and logged to provide for trending and comparison. The quality of samples can change dramatically during system start up and therefore an ongoing logging of information is critical to observe these trends. See Section 7 for specific details on appropriate data collection.

6.2 ANALYSIS DEFINITIONS AND APPLICATIONS

The purpose of this Section is to provide generic definitions, typical applicability, and methods for various types of analysis.

6.2.1 Alkalinity (Hydrated). The quantitative capacity of an aqueous media to react with hydrogen ions.

Routine testing of boiler water alkalinity is used to help set levels of chemical treatment to control scale, corrosion, and other adverse chemical conditions. The combination of alkalinity and pH indicates the buffering capacity of the sample. (See Table 6.1.)

6.2.2 Amines (Neutralizing). Organic compounds of varying molecular weight which contain an amine (-NH or $-NH_2$) group. Organic amines are most commonly used in nuclear, industrial, and low pressure fossil cycles. Various amines have differing vapor/liquid distribution ratios and base strengths. The distribution ratios and base strengths vary with temperature. (2)(3)(4)(5) Table 6.2 shows the appropriate measurement techniques for selected amines.

Two or more amines, because of their differing vapor-to-liquid ratios, may be used in industrial systems to neutralize carbonic acid and maintain proper pH throughout the process. Since the distribu-

Copyright ASME International
Provided by IHS under license with ASME
No reproduction or networking permitted without license from IHS

Not for Resale

TABLE 6.2
TYPES OF NEUTRALIZING AMINES

Amine	Measurement
Morpholine	IC, Colorimetric (ASTM D1942), GC (ASTM D4983)
Ethanolamine (ETA)	IC
Cyclohexylamine	IC, GC (ASTM D4983)
Amino Methyl Propanol (AMP)	IC
Methoxy Propyl Amine (MPA)	IC
Diethylaminoethanol	IC

GENERAL NOTES:
IC = Ion chromatography
GC = Gas chromatography

TABLE 6.3
AMINES (NEUTRALIZING)

Method	Usage: On-Line	Usage: Grab	Comments
Vendor-specific instruments	X	X	
Ion chromatography (ASTM D4327 & D1067)		X	Routinely used for on-line monitoring

TABLE 6.4
AMMONIA

Method	Usage: On-Line	Usage: Grab	Comments
Direct nesslerization (ASTM D1426 A)		X	Recommended technique, especially for grab samples
Ion selective electrode (ASTM D1426 B)	X		
Ion chromatography (ASTM D4327)		X	Routinely used for on-line monitoring

tion ratio, pH, and decomposition rate vary with temperature, the user must consider these parameters for the proper application of neutralizing amines.

Neutralizing amines are not used in industrial processes involving food, beverages, pharmaceuticals, and hospitals.

Neutralizing amines used in industrial processes are usually not measured directly, but rather the dosage is adjusted to maintain proper pH. (See Table 6.3.)

Note: Decomposition products for all the amines listed have not been identified. Ammonia has been the only acceptable pH additive for high-pressure fossil once-through systems.

6.2.3 Ammonia. Highly soluble alkaline compound of nitrogen and hydrogen. Typically present as the ammonium ion.

Ammonium hydroxide is used in power plant cycles for pH control. Regulating the amount of ammonia necessary to stay within the prescribed limits is especially important in units with mixed metallurgy. Ammonia is normally injected into the cycle at the condensate pump discharge and monitored at the economizer inlet using either pH or conductivity as the major control mechanism. Concurrent with the feed of ammonia, hydrazine is often fed to the cycle to control dissolved oxygen. Breakdown products resulting from thermal decomposition of hydrazine are nitrogen and ammonia. Most of the ammonia vaporizes in the boiler water and carries over with the steam. On occasion, ammonia levels in the condensate can reach unacceptably high levels and (especially in the presence of dissolved oxygen) become extremely corrosive to the copper and copper-alloy equipment in steam condensing and pre-boiler systems. (See Table 6.4.)

6.2.4 Carbon Dioxide. Compound CO_2 which makes up about 0.03% by volume of the atmosphere. It readily dissolves to form carbonic acid and related bicarbonate species in water. Pure water in equilibrium with air has a pH of about 5.6 and a conductivity of about 1 μS/cm. CO_2 can deplete polisher resin and can be corrosive, especially in wet stages of turbine and in steam piping. (See Table 6.5.)

(See para. 6.2.6. Carbon dioxide may be detected by measuring the difference between cation and degassed cation conductivity values.)

6.2.5 Chloride. Anion of the halogen family (Cl^-).

Chloride is one of the most aggressive anions in causing corrosion. Chloride intrusions commonly result from condenser leaks and sometimes from condensate polishing or makeup demineralizers. The resultant ingress of chloride can participate in pitting and stress corrosion cracking of major steam cycle components. Ultimately it can reach the turbine as a result of mechanical or vaporous carryover, with

Copyright ASME International
Provided by IHS under license with ASME
No reproduction or networking permitted without license from IHS
Not for Resale

TABLE 6.5
CARBON DIOXIDE

Method	Usage: On-Line	Usage: Grab	Comments
Titrimetric and ion selective electrode (ASTM D513)		X	
Electrical probe (ASTM D4519)	X		

TABLE 6.7
SPECIFIC CONDUCTIVITY

Method	Usage: On-Line	Usage: Grab	Comments
Electrical probe (ASTM D1125)	X	X	
Electrical probe (ASTM D5391)	X		Recommended

TABLE 6.6
CHLORIDE

Method	Usage: On-Line	Usage: Grab	Comments
Ion selective electrode	X		Lower sample pH and temperature to achieve µg/L (ppb) sensitivity
Ion selective electrode (ASTM D512 C)		X	mg/L (ppm) concentrations only
Ion chromatography (ASTM D4327)	X	X	Recommended for grab samples
Mercurimetric titration (ASTM D512 A)		X	mg/L (ppm) concentrations only
Silver nitrate (ASTM D512 B)			Not recommended

potential damage to blade materials. While cation conductivity can sometimes indicate the presence of chloride, this measurement usually includes larger effects from other less aggressive species, such as carbon dioxide, unless degassed cation conductivity is used. (See Table 6.6.)

6.2.6 Conductivity

6.2.6.1 Conductivity, Specific. A measurement of all ionic species which contribute to the electric conductivity of a solution. In essence, conductivity is a broad measurement of total ionic impurities. Normally reported as micro Siemens per centimeter, it is electrically noted as the reciprocal of the resistance in ohms measured between opposite faces of a cubic centimeter of an aqueous solution referenced to 25°C.

Most modern analyzers attempt to temperature compensate; however, accurate temperature compensation of high-purity conductivity measurement must account for the dramatic change in ionization of water with temperature. On samples with ammonia, morpholine, etc. present, specialized compensation algorithms must include their unique effects on the ionization of water.

Electrical conductivity methods are widely used for monitoring makeup water, feedwater, and condenser leakage. Advantages are the comparatively little maintenance required for the sensors (cells), the low cost, and high reliability.

Specific conductivity, in responding to all ions present, tends to follow the concentration of pH adjusting reagent(s) (usually ammonia) since that is the dominant material present in samples under normal operation. (See Table 6.7.)

6.2.6.2 Conductivity, Cation. Similar to specific conductivity, cation conductivity is a measurement of anionic contamination rather than total ionic species. This is the case since the sample is passed through a hydrogen ion exchange resin before conductivity measurement, where ammonia, amines, and other cationic contaminants are removed. This greatly sharpens sensitivity to contamination by removing the masking affect of ammonia, amines, and at the same time converts salts to the corresponding mineral acids, which are considerably more conductive than the salts, thus further increasing sensitivity.

Cation conductivity is particularly useful for detecting the leakage of cooling water into condensate. Most dissolved salts found in natural waters, plus dissolved acidic gases (for example, CO_2) will contribute to acid conductivity. However, non-ionized or weakly ionized substances (for example, SiO_2) will not be detected by this method. Hydroxide ions are not measured by this method. (See Table 6.8.)

Copyright ASME International
Provided by IHS under license with ASME
No reproduction or networking permitted without license from IHS
Not for Resale

TABLE 6.8
CATION CONDUCTIVITY

Method	Usage: On-Line	Usage: Grab	Comments
Electrical probe (ASTM D4519 & D5391)	X		

6.2.6.3 Conductivity, Degassed Cation. This technique employs hydrogen cation exchange and degasification by boiling the sample, which provides the means to determine conductivity due to anionic impurities without the influence of carbon dioxide. The sample is passed first through a column of cation resin in the hydrogen form, then through an electric reboiler, with final measurement of the electrical conductivity of the total anions made at atmospheric boiling water temperatures free of interference due to amines and carbon dioxide. (6)

Most large turbine condensers receive, in addition to exhaust steam, the makeup water, drips, drains, and vent discharges from other components in the steam plant. Impaired purity of one or more of these flow streams may increase the conductivity of the condensate. In the absence of other information, the interpretation could well be leakage of cooling water. Persistence of the high conductivity after such flow streams are isolated from the condenser is more certain evidence of in-leakage. Simultaneous measurements of the sodium, specific conductivity, cation conductivity, cation conductivity after CO_2 removal, hardness, and pH of both condensate and throttle steam may help distinguish sources of contamination.

6.2.7 Copper. Trace transition metal primarily present as soluble oxide.

Copper alloys are frequently used for heat transfer components. Dissolved copper, usually as an oxide, is present as a corrosion product which can form deposits on heat transfer surfaces and turbines with attendant loss of efficiency. pH, ammonia, and dissolved oxygen are controlled to minimize corrosion of copper alloys. Monitoring copper levels provides feedback on the success of this control. (See Table 6.9.)

Note: See para. 6.3.1 for information on integrated sampling techniques for copper.

6.2.8 Dissolved Oxygen. Oxygen gas dissolved/entrained in aqueous media.

TABLE 6.9
COPPER

Method	Usage: On-Line	Usage: Grab	Comments
Neocuproine colorimetric		X	
Atomic absorption, direct (ASTM D1688 A)		X	
Atomic absorption, chelation-extraction (ASTM D1688 B)		X	Not recommended
Atomic absorption, graphite furnace (ASTM D1688 C)		X	

TABLE 6.10
DISSOLVED OXYGEN

Method	Usage: On-Line	Usage: Grab	Comments
Electrochemical (ASTM D5462)	X		
Titrimetric (ASTM D888 A)		X	For mg/L (ppm) concentrations
Color comparator using glass ampoules (ASTM D5543)		X	

At high temperatures, especially with elevated conductivity, oxygen reacts readily with most metals. This corrosive attack not only weakens system components but also forms sludge which can deposit on heat transfer surfaces and turbine blades. Control of dissolved oxygen is extremely important in any boiler cycle.

While most applications reduce dissolved oxygen concentration as low as possible, *oxygenated treatment* water chemistry maintains levels of 50-150 μg/L (ppb) to maintain ferrous metal passivation. (See Table 6.10.)

6.2.9 Hydrazine. Chemically known as N_2H_4, hydrazine is a powerful reducing agent used in boiler feedwater treatment as an oxygen scavenger and metal passivator. It is normally introduced into the cycle at the condensate pump discharge to provide a residual greater than or equal to three times the

Copyright ASME International
Provided by IHS under license with ASME
No reproduction or networking permitted without license from IHS
Not for Resale

TABLE 6.11
HYDRAZINE

Method	Usage: On-Line	Usage: Grab	Comments
Colorimetric (ASTM D1385)		X	Routinely used for on-line measurements
Ion selective electrode	X		
Ion chromatography		X	Not recommended

TABLE 6.12
HYDROGEN

Method	Usage: On-Line	Usage: Grab	Comments
Thermal conductivity	X		
Fuel cell	X		
Polarographic	X		

dissolved oxygen concentration. Hydrazine reacts with dissolved oxygen to form water and nitrogen.

WARNING! Hydrazine vapors are a suspected carcinogen and a threshold limit has been set by OSHA.

In addition to reacting with dissolved oxygen to form water and nitrogen, hydrazine may also thermally decompose to form ammonia and nitrogen. Ammonia increases the pH and under certain conditions is corrosive to copper alloy components in the system. Therefore, the concentration of hydrazine must be maintained at a level that will scavenge the dissolved oxygen yet not increase ammonia levels so as to exceed guidelines for this parameter.

Hydrazine concentrations in the cycle water are measured at the deaerator inlet with a desired concentration of at least 20 ppb. Sometimes trace quantities are detected in the boiler water, depending upon cycle temperatures. Hydrazine is sometimes injected into the low-pressure turbine at the crossover pipe between the intermediate and low-pressure sections. Iron and copper values may be reduced in samples from units that have injected hydrazine in this matter. (See Table 6.11.)

6.2.10 Hydrogen. Increases in the hydrogen content of the steam or water may indicate accelerated corrosion of a component. On-line monitoring of hydrogen has been used to investigate corrosion of carbon steel support plates in nuclear recirculating steam generators; a variety of corrosion mechanisms in fossil-fired boilers; dissolved hydrogen concentrations in PWR reactor coolant; and heavy water-moderated reactors. On-line instruments based on the principles of thermal conductivity, fuel cell, and polarography have been used, along with gas chromatographic analysis of grab samples. (7)–(11)

Extreme care should be taken in the interpretation of the data since hydrogen can be produced from sources other than corrosion; e.g., decomposition of hydrazine, morpholine, and organic chemicals, permeation through tube walls from external sources, and dissociation from throttling high-pressure steam. (See Table 6.12.)

6.2.11 Ion Chromatography. A form of liquid chromatography in which ionic constituents are separated by ion exchange. There are basically two types of ion chromatography (IC): One is commonly referred to as *chemically suppressed IC* and the other *electronically suppressed IC*. The difference between the two types of IC is simply a matter of whether or not a suppresser column or other device is used to convert the salts in the eluant to a weakly conducting species, and the eluting anions to their respective acids. Those systems which use a suppressor device are referred to as chemically suppressed. The method described below utilizes chemical suppression in order to obtain the low detection limits required.

Ion chromatography is commonly used for the determination of anions. In this application, a measured volume of sample is injected into a stream of flowing eluant which usually consists of a carbonate/bicarbonate mixture. The eluant carries the sample through a column packed with an anion exchange resin. The anions in the sample are separated in the column and elute at different times. In the chemically suppressed IC, the eluant carries the eluting anions into a suppressor column containing a cation exchange resin where the carbonate is converted to carbonic acid and the anions converted to their corresponding acids. This solution is then passed through a conductivity flow cell and the conductivity of the eluting solution is continuously measured. In chemically suppressed IC, the background conductivity of the eluant is minimized by having been converted to carbonic acid and the conductivity of the eluting anions is enhanced by having been converted to their corresponding acids.

Anions measured at trace (μg/L) levels include fluoride, acetate, formate, chloride, nitrate, phos-

Copyright ASME International
Provided by IHS under license with ASME
No reproduction or networking permitted without license from IHS

Not for Resale

TABLE 6.13
ION CHROMATOGRAPHY

Method	Usage: On-Line	Usage: Grab	Comments
Chemically suppressed (ASTM D4327)		X	Routinely used for on-line monitoring
Electronically suppressed (No ASTM standard at this time)		X	

TABLE 6.14
IRON

Method	Usage: On-Line	Usage: Grab	Comments
Bathophenanthroline colorimetric (ASTM D1068 D)		X	µg/L (ppb) range
Orthophenanthroline colorimetric (ASTM D1068 A)		X	Not recommended
Atomic absorption, direct (ASTM D1068 A)		X	µg/L (ppb) range
Atomic absorption, chelation-extraction (ASTM D1068 B)		X	µg/L (ppb) range
Atomic absorption, graphite furnace (ASTM D1068 C)		X	µg/L (ppb) range

phate, and sulfate in high purity water. (See Table 6.13.)

Note: On-line IC has also been used for various anions including organics [see Reference (1)].

6.2.12 Iron. Transition metal. Ferrous form (Fe^{2+}) can exist in oxygen-free water. Ferric (Fe^{3+}) form is readily formed under oxidizing conditions.

Steel can be used in boiler cycle components only because it forms a thin film of magnetite (Fe_3O_4) or hematite (Fe_2O_3), which protects against further corrosion. However, the solubility of these oxides is dependent on temperature and pH. Iron oxides are probably the most prevalent corrosion products and tend to form sludge and deposits that greatly reduce efficiency. (See Table 6.14.)

TABLE 6.15
ORGANIC ANIONS

Method	Usage: On-Line	Usage: Grab	Comments
Oxidation/CO_2 detection (ASTM D5173)	X		
Ion chromatography (ASTM D4327)		X	Used for on-line monitoring

Note: See para. 6.3.1 for information on integrated sampling techniques for iron.

6.2.13 Morpholine. See Amines.

6.2.14 Organic Anions. Anions that may form weak acids which contain carboxylic acid component (-COOH).

Organic anions, predominantly formic and acetic, are formed by the decomposition of organic additives, ion exchange, DI resin, lubricants, and organics in make-up water which have leaked into the cycle. Organic anions add to specific and cation conductivity and may be corrosive. Detection by methods other than conductivity is needed to isolate this organic contamination from other sources. (See Table 6.15.)

Note: See para 6.2.12.

6.2.15 Oxygen Scavengers. Reducing agents which consume dissolved oxygen. The list below defines most of the known oxygen scavengers. (See Table 6.16.)

- Hydrazine
- Sodium sulfite
- Ferrous sulfate
- Sodium bisulfite
- Erythorbate
- Carbohydrazide
- DEHA (Diethyl hydroxylamine)
- DEHA + hydroquinone
- Cyclohexylamine Erythorbate
- Hydroquinone
- Hydroquinone + MOPA (Methoxypropylamine)
- Catalyzed hydroquinone
- Methylethyl ketoxime
- Morpholine (reacts with O_2 but not considered a scavenger)
- Isoascorbate

Copyright ASME International
Provided by IHS under license with ASME
No reproduction or networking permitted without license from IHS

Not for Resale

TABLE 6.16
OXYGEN SCAVENGERS

Method	Usage: On-Line	Usage: Grab	Comments
Vendor specific instruments	X	X	Consult IC or scavenger supplier
Ion chromatography (ASTM D4327)		X	Used for on-line monitoring

Caution: Some oxygen scavengers have been determined to be a health hazard. Consult supplier for additional information.

TABLE 6.17
pH

Method	Usage: On-Line	Usage: Grab	Comments
Electrometric instrumental probe (ASTM D1293)		X	
Electrometric instrumental probe (ASTM D5128)	X		

6.2.16 pH. The negative logarithm of the concentration or activity of hydrogen ion. pH provides an indication of the acidic or alkaline tendency of water. It is determined by measuring the potential difference between a pH measuring electrode and a reference electrode immersed in the sample. The pH meter and electrodes are standardized against two reference buffer standards near the anticipated sample pH.

Temperature changes both electrode response and the chemical equilibrium in the sample. The former is routinely compensated automatically. Compensation for changes in chemical equilibrium requires knowledge of the sample temperature coefficient and in many cases can be compensated automatically with appropriate instrumentation and settings.

pH is an important consideration in determining the corrosive action of water and assessing water treatment practices. Corrosion in a boiler is very pH dependent. For example, at low pH (below 9) in deaerated solutions, iron corrosion will increase, and at high pH, copper corrosion will increase. The optimum pH level will depend on the particular plant, cycle, materials used, and operating conditions and is usually determined experimentally by observing the levels of corrosion products in the water while the plant operates. In large power plants, pH of the feedwater is usually controlled by addition of ammonia or other amines between the condensate pump and the boiler feed pump. (See Table 6.17.)

6.2.17 Phosphate. Anionic form of phosphoric acid (PO_4^{3-}).

Sodium phosphate is used as an internal boiler water treatment chemical to prevent scale buildup on heat transfer surfaces of modern industrial and utility boilers and to provide pH and alkalinity elevation while minimizing availability of hydroxide ions. Phosphates most widely used are disodium and trisodium phosphates, which may be fed individually or in blends. Sodium phosphates (possibly with the addition of NaOH) provide the desired pH in the boiler water and moderate the effects of condenser leakage. (See Table 6.18.)

TABLE 6.18
PHOSPHATE

Method	Usage: On-Line	Usage: Grab	Comments
Amino reduction colorimetric (ASTM D515 B)		X	
Molybdovanadophosphate colorimetric (ASTM D515 C)			Used for on-line monitoring
Ion chromatography (ASTM D4327)		X	Used for on-line monitoring

6.2.18 Silica. Silicon is the second most abundant element on earth. It is present in water as silicate anion as well as in colloidal forms.

Silica is monitored at a number of locations throughout the steam-water cycle. Generally, silica becomes a concern in the steam cycle as it passes over from the boiler water into the steam as silicic acid, which deposits as silicate on turbine blades as the steam pressure and temperature drop during passage through the turbine. Silica deposits on turbine blades are very difficult to remove, degrade efficiency and, in extreme cases, can lead to steam turbine failure.

Silica is a very weakly ionized anion and is therefore difficult to remove by ion exchange. It is therefore monitored following anion and mixed bed

Copyright ASME International
Provided by IHS under license with ASME
No reproduction or networking permitted without license from IHS

Not for Resale

TABLE 6.19
SILICA

Method	Usage: On-Line	Usage: Grab	Comments
Colorimetric (ASTM D859 B)		X	Routinely used for on-line monitoring
Atomic absorption, graphite furnace (ASTM D4517)		X	Detects total silica. Recommended, especially when significant nonreactive silica is present

TABLE 6.20
SODIUM

Method	Usage: On-Line	Usage: Grab	Comments
Ion-selective electrode (ASTM D2791 A)	X		
Flame photometry (ASTM D2791 B)	X		
Ion chromatography	X	X	
Atomic absorption (ASTM D4191)		X	>200 μg/L (ppb) range
Atomic absorption, graphite furnace (ASTM D3919)		X	Recommended technique for grab samples
Flame photometry		X	

exchangers in both makeup treatment and condensate polishing. (See Table 6.19.)

6.2.19 Sodium. Alkali metal present in water as cation Na^+.

The determination of the sodium content is utilized in the assessment of steam purity, condenser inleakage, and condensate polisher and makeup demineralizer performance. Its testing and control is critical in steam samples where sodium hydroxide and sodium chloride have been directly linked to turbine failures. Sodium compounds can also lead to boiler and economizer tube failures.

Condensers are a primary source of contamination in the steam-water cycle. Since the condensate is under vacuum, any leakage in the condenser results in cooling water entering the condensate. Cooling water — either fresh water or sea water — contains a relatively high concentration of sodium. With detection capability less than 1 μg/L (ppb), sodium ion analysis provides a very sensitive means to detect condenser leaks.

Ionic impurities entering the steam-water cycle can be removed by condensate polishing demineralizers. Sodium is usually the first ion to break through upon exhaustion of the cation exchange resin. Sodium ion measurement is particularly significant in the operation of ammoniated cation resins, since it is the only means of detecting early breakthrough. (See Table 6.20.)

6.2.20 Sulfate. Anionic form of sulfuric acid (SO_4^{2-}).

The sulfate ion is an aggressive ion and can cause corrosion. The intrusion of sulfate may result from condenser leaks or from condensate polishers or makeup demineralizers. Cation and specific conductivity measurements may serve to indicate such mineral contamination, but this measurement doesn't distinguish whether the mineral contamination is chloride, sulfate, other mineral anions, amine, or carbon dioxide. (See Table 6.21.)

TABLE 6.21
SULFATE

Method	Usage: On-Line	Usage: Grab	Comments
Gravimetric (ASTM D516)		X	Useful for grab sample only
Ion chromatography (ASTM D4327)	X	X	Recommended technique
Turbidimetric	X		Routinely used for on-line monitoring

6.2.21 Total Organic Carbon (TOC). Total content of organic bound carbon present in water. Also see para. 6.2.14.

The primary purpose of total organic carbon analysis is to determine fouling tendencies in the raw water supply and/or returned condensate from cogeneration steam users. Monitoring of organics removal in the demineralizer is also possible. (See Table 6.22.)

6.2.22 Trace Metals. See Iron and Copper. Other trace metals such as nickel, chromium, zinc, alumi-

Copyright ASME International
Provided by IHS under license with ASME
No reproduction or networking permitted without license from IHS
Not for Resale

TABLE 6.22
TOTAL ORGANIC CARBON (TOC)

Method	Usage: On-Line	Usage: Grab	Comments
Oxidation/CO_2 detection (ASTM D5173)	X		>10 μg/L (ppb) range
Instrumental (oxidation and infrared detection) (ASTM D4779)	X	X	
Combustion/Infrared (ASTM D2579 A)		X	>2 mg/L (ppm) range. Routinely used for on-line monitoring
Coulometric (ASTM D4129)		X	
Persulfate oxidation (standard methods 505-B)		X	

TABLE 6.23
TURBIDITY

Method	Usage: On-Line	Usage: Grab	Comments
Optional	X		

num, and lead can also be monitored. See para. 6.3.1.

6.2.23 Turbidity. ASTM defines turbidity as "reduction of transparency of a sample due to the presence of particulate matter."

Plants using surface-water supply rely on coagulation, settling, and filtration to ensure an acceptable effluent. Turbidity measurements are sometimes made on cycle water samples as a qualitative means of monitoring corrosion products. (See Table 6.23.)

6.3 OTHER METHODS

6.3.1 Sampling of Metals and Metallic Oxides. The presence of metals or metal oxides in condensate and feedwater is undesirable as they become constituents of and contribute to the formation of deposits in the steam generator, turbine, and other components of the cycle. Typical of the metals and oxides which are important are iron, copper, nickel, chromium, zinc, lead, and aluminum. The form in which metal contaminants exist at any point in the cycle is dependent on the temperature and chemical environment. Deposits rich in these materials are found in critical areas of filters, orifices, heater tubes, steam generator tubes, and turbine blades.

Metal oxide deposits on steam generator tubes and feedwater heater tubes can impair heat transfer, increase pressure drop, and may promote corrosion. Deposits in turbines decrease efficiency and capacity, and may lead to localized corrosion. Metallic and metal oxide contaminants in condensate or feedwater usually indicate corrosion, erosion, or both in the pre-boiler system. Significant amounts of these materials may disclose inadequate or improper conditioning of the condensate, feedwater or makeup, incomplete deaeration, post-deaeration inleakage of air, improper handling of heater vents and drips, improper materials selection in critical parts of heaters or condenser, excessive fluid flow velocities in one or more components of the system, or design defects.

Significant increase in metal contaminants can be expected under certain conditions such as start-up or cyclic operation. The suspended and dissolved metallic contaminants in samples do not necessarily exist in the same ratio or form as in the sampled water. Attempts to differentiate between soluble and suspended contaminants can be misleading. Determination of the total concentration of metal contaminants generally gives the most consistent results, but may not be the best basis for evaluation.

6.3.1.1 Sampling. The sampling technique for metal contaminants is extremely important. An adequate and constant sampling rate should be maintained to minimize fluctuations in contaminant concentrations due to "hang up" in sample lines and coolers. Samples should be allowed to flow continuously for at least an hour (preferably 24 hours) before sample collection for analysis is begun. A new sample line and cooler should be "seasoned" for several hours (preferably several weeks) by continuous sample flow before a sample is taken for analysis. The flow rate of the sample should be 5 to 7 ft/s (1.5 to 2.1 m/s). Refer to Sections 2, 3, and 4 of this Supplement for sampling protocol and to ASTM D 4453, Handling Ultrapure Water Samples.

6.3.1.2 Turbidity Measurements. Much of the metal found in the cycle is in the finely divided oxide form. This is especially true during startups when metal concentrations are high.

Copyright ASME International
Provided by IHS under license with ASME
No reproduction or networking permitted without license from IHS

Not for Resale

The presence of such material can be detected with membrane filters, through which known quantities of water are passed. The resulting coloration and amount of deposit can be interpreted in terms of suspended matter concentration by comparison with a calibration chart prepared at the sampling site. Temperature affects the color of a deposit, and the calibrations are applicable only when the environment is duplicated. Filter readings have been found very useful in monitoring system cleanliness. Detailed procedures for preparation of standard iron oxide membrane comparison charts and determining iron oxide and iron concentration in samples have been published by ASME and ASTM and standard comparison charts are available commercially. (12)(13)(14)

Total suspended matter can be estimated by continuous on-line monitoring instruments (turbidimeters and/or nephelometry) in which light is reflected from the suspended particles. Such instruments permit observation of the changes in the amount of suspended material in the water. They do not differentiate between different contaminants.

6.3.1.3 Summary of Methods for Grab Samples. The method of choice for the analysis of metals in grab samples is atomic absorption (ASTM D 3919 and D 4691). However, this instrument may not always be available.

Photometric methods are suitable alternatives, but are more labor intensive. The information below can be used as a guide by the analyst. If available, Inductively Coupled Plasma (ICP) Spectroscopy (ASTM D 1976 and D 4190) is an excellent technique for determining multiple elements simultaneously in a single sample.

Note: Some of these methods have produced lower levels of detection than claimed.

6.3.1.3.1 Iron. Refer to ASTM D 1068.

Method	Range
A — Photometric Orthophenanthroline	5–3000 μg/L
B — Photometric Bathophenanthroline	2–200 μg/L
C — Atomic Absorption, Direct	50–5000 μg/L
D — Atomic Absorption, Chelation-Extraction	5–500 μg/L
E — Atomic Absorption, Graphite Furnace	5–100 μg/L

6.3.1.3.2 Copper. Refer to ASTM D 1688.

Method	Range
A — Neocuproine	50–5000 μg/L
B — Neocuproine	2–200 μg/L
D — Atomic Absorption, Direct	20–5000 μg/L
E — Atomic Absorption, Chelation-Extraction	2–500 μg/L
F — Atomic Absorption, Graphite Furnace	5–100 μg/L

6.3.1.3.3 Nickel. Refer to ASTM D 1886.

Method	Range
A — Carbonate	1–50 μg/L
B — Glyoxime	10–5000 μg/L
C — Atomic Absorption, Direct	100–10000 μg/L
D — Atomic Absorption, Chelation-Extraction	10–1000 μg/L
E — Atomic Absorption, Graphite Furnace	5–100 μg/L

6.3.1.3.4 Chromium. Refer to ASTM D 1687.

Method	Range
A — Permanganate Oxidation	500–5000 μg/L
B — Hypobromite Oxidation	500–5000 μg/L
C — Alkaline-Persulfate Oxidation	500–5000 μg/L
D — Atomic Absorption, Direct	100–10000 μg/L
E — Atomic Absorption, Graphite Furnace	5–100 μg/L

6.3.1.3.5 Zinc. Refer to ASTM D 1691.

Method	Range
A — Colorimetric with Zincon, High Range	20–5000 μg/L
B — Colorimetric with Zincon, Low Range	2–250 μg/L
C — Atomic Absorption, Direct	10–2000 μg/L
D — Atomic Absorption, Chelation-Extraction	1–200 μg/L

6.3.1.3.6 Aluminum. Refer to ASTM D 857.

Method	Range
A — Fluorometric	< 5μg/L
B — Spectrophotometric	0–500 μg/L
C — Spectrophotometric (Ferron)	—
D — Atomic Absorption, Direct	100–5000 μg/L
E — Atomic Absorption, Chelation-Extraction	10–300 μg/L

6.3.1.3.7 Lead. Refer to ASTM D 3559.

Method	Range
A — Atomic Absorption, Direct	1000–10000 μg/L
B — Atomic Absorption, Chelation-Extraction	100–1000 μg/L
C — Differential Pulse Anodic Stripping Voltammetry	1–100 μg/L
D — Atomic Absorption, Graphite Furnace	5–100 μg/L

It is important that the analyst carefully review the method chosen to ensure that it is applicable to the sample. Considerations are: Expected concentration of the metal, quantity of sample available, oxidation state, interference expected to be present, availability of required instrumentation, and proper preparation of the sample for analysis.

6.3.1.4 Integrated Sampling Procedures. Integrated sampling procedures or sample preconcentration may be necessary to obtain reasonable estimates of corrosion products in some feedwater systems. (15)(16)(17)

One approach is to obtain one to four liters of sample from a continuously flowing sample stream and filter the sample in the laboratory through an 0.45 micron membrane filter. Preferably, three cation resin-impregnated membranes should be inserted

Copyright ASME International
Provided by IHS under license with ASME
No reproduction or networking permitted without license from IHS

Not for Resale

below the membrane filter to collect soluble/colloidal species.

A similar technique can be used on-line. A 0.45 micron membrane filter followed by three cation resin-impregnated membranes are used to collect the metal oxides. A continuous sample flow rate of 50 to 100 ml/min and sampling periods of several hours to seven days have been used.

The on-line integrated collection method allows long-term averaging of corrosion product concentrations. Mass balances can be performed around major components and major sources of the corrosion products within the feedwater system can be identified.

Note: Sample streams feeding this apparatus and other analysis should be isokinetically split to ensure that the corrosion products are properly represented in the sample.

The deposits on the membrane filters can be dissolved, and the cations regenerated from the cation resin membranes. The resultant solutions are analyzed by atomic absorption or photometric methods described above. Also, a recent investigation has shown that the membrane filters and cation resin membranes can be analyzed non-destructively by x-ray fluorescence. (18)–(22)

6.3.2 Semi-Continuous On-Line Monitoring. Ion chromatography and atomic absorption have been used in a semi-continuous on-line mode (alternate analysis of different sample streams by one instrument or periodic grab samples from a single stream) for the analysis of metals. The ion chromatograph is also well suited for monitoring trace anions semi-continuously.

6.4 REFERENCES

(1) Annual Book of ASTM Standards, Water and Environmental Technology. Vols. 11.01, 11.02.

(2) Cobble, J.W. and P.J. Turner. "PWR Advanced All-Volatile Treatment Additives, By-products and Boric Acid." EPRI TR-100758, 1992.

(3) Bellows, J.C. "Chemical Modeling in Nuclear Turbines." Proceedings of the 54th International Water Conference. Pittsburgh, Pennsylvania, October 11-13, 1993.

(4) Passell, T.O. "Feedwater Quality Control Extends Power Plant Life." *Power Engineering* 19-23 (September 1993).

(5) Riddle, J.M. and T.O. Passell. 1990 Workshop on Use of Amines in Conditioning Steam/Water Circuits. 25-27, September, Tampa, Florida.

(6) Lane, R.W., F.W. Sollo, and C.H. Neff. "Continuous Monitoring of Anions in Feedwater by Electrical Conductivity," *Illinois State Water Survey Reprint 473.* Reprinted from "Water and Steam, Their Properties and Current Industrial Applications," Pergammon Press, Oxford and New York 1980.

(7) Harkins, B.J., C.R. Wilson, and M.W. Rootham. "The Application of Hydrogen Measurement Techniques for Monitoring PWR Steam Generator Corrosion." The International Association of Corrosion Engineers, March 22-26, 1982, Paper No. 213.

(8) Jacklin, C. and D. G. Wiltsey. "Dissolved Hydrogen Analyzer — A Tool for Boiler Corrosion Studies." *Materials Protection and Performance* 10(5)(May 1971):39-44.

(9) Joneson, D.H. "Hydrogen Analysis as a Method of Corrosion Monitoring in Boilers." *Combustion,* August 1979.

(10) Jonas, O., R.W. Bradshaw, and J.P. Gilbeault. "Evaluation and Applications of a New Dissolved Hydrogen Analyzer," Proceeding of IWC, November 1985.

(11) Ward, G.L. "Evaluation of a Reactor Coolant Dissolved Hydrogen Monitor for Pressurized Water Reactors." Proceedings of the IWC, November 1985.

(12) ASME PTC-31, Ion Exchange Equipment, Appendix III.

(13) "ASTM Power Plant Water Analysis Manual." First Ed., 1984. ASTM PCN 03-419084-16: 205.

(14) Standard membrane charts available from the Babcock & Wilcox Co., ESD. P.O. Box 351, 20 S. VanBuren Ave., Barberton, Ohio 44203.

(15) Siegwarth, D.P., W.L. Pearl, and S.G. Sawochka. "Turbine Chemical Monitoring at ANO-1." EPRI NP-2390, May 1982.

(16) Sawochka, S.G., S.E. Copley, and W.L. Pearl. "Corrosion Product Transport in PWR Secondary Systems." EPRI NP-2149, December 1981.

(17) Mravich, N.J. and G.T. Upperman. "Secondary System Water Chemistry Program for ANO-1." EPRI NP-2391, May 1982.

(18) Bogart, J.R., J.M. Kibler, and J.K. Schmotzer. "Standardless EDXRF Analysis of Cations in Ion-Exchange Resin Impregnated Membranes." *Advances in X-Ray Analysis* 30(1987):153-164. Plenum Publishing Co.

(19) Stauffer, C.C., D.J. Connolly, and P.J. Millett. "On-Line Monitoring of Particulate Iron Oxides in Steam Generator Feedwater Using X-Ray Fluorescence." Paper No. 623 of Corrosion 95.

(20) Connolly, D.J. and P.J. Millett. "On-Line Particulate Iron X-Ray Monitor." *Ultrapure Water* (February 1994): 61-65.

(21) Connolly, D.J. "On-Line Particulate Iron and Sulfur Monitor." Proceedings: On-Line Monitor-

Copyright ASME International
Provided by IHS under license with ASME
No reproduction or networking permitted without license from IHS

Not for Resale

ing of Corrosion and Water Chemistry for the Electric Power Utility Industry, 12th International Corrosion Congress 6 (March 1994): 4295-4304.

(22) Mravich, N.J. and D.J. Connolly. "Automated Corrosion Product Sampling and X-Ray Fluorescence Analysis." Proceedings: 1990 International Conference on Measuring Waterborne Substances, August 1990.

Copyright ASME International
Provided by IHS under license with ASME
No reproduction or networking permitted without license from IHS

Not for Resale

SECTION 7 — DATA ACQUISITION, DATA ANALYSIS, AND CONTROL

7.0 SCOPE

This Section deals with analyzers, data transmission, recording, digitizing, storage, display, analysis, and control functions of data. It concentrates on automatic data acquisition systems and the integration of manually analyzed samples into the automatically acquired data. It suggests review procedures and other manipulation of the data. The purpose of this Section is to outline the problem and the questions that should be answered in the selection of a chemistry data acquisition system. Although manual reading and logging and chart recording constitute primitive data acquisition systems, they are well established methods and will not be discussed here except as they relate to the concerns of this Section. This Section will discuss automated data acquisition with computers or digital data loggers.

7.1 DEFINITIONS

analyzer: an analyzer is a complete system to provide the value of a parameter in a useful, valid form. A chemical analyzer will take a sample, chemically condition it, flow it past a sensor, electrically condition the sensor output, display the sensor output, and provide a buffered output signal for data acquisition systems to use. An analyzer may consist of separate sensor and monitor, or both may be in the same housing with chemical conditioning equipment. "Analyzers" may also be called "monitors."

archive: data are archived when they are stored permanently or for a specified long period of time

dead-band: in signal processing, the dead-band is the minimum change in a signal to which the output will respond. Changes smaller than the dead-band will not be seen in the output. The dead-band may be inherent in the equipment or adjustable.

feedback loop: a control method in which the output of a sensor or analyzer is compared to a reference value and the result of the comparison is used to control a device in such a way that the monitored parameter is driven toward the reference value

hard-over failure: a hard-over failure occurs when a sensor or analyzer fails such that its output reaches either the high end or the low end of the range. Open or shorted thermocouples are good examples of hard-over failures.

I/O: the input/output function of a computer is commonly referred to as I/O. In this Section, I/O will usually refer to analog-to-digital (A/D) conversion, although it properly includes digital-to-analog conversion and digital data transmission.

monitor: a monitor is an electrical package to condition a signal from a sensor, usually display the value, and usually provide a buffered output signal for data acquisition systems to use

RS-232/RS-422/RS-485: serial digital interface standards of the Institute of Electrical and Electronics Engineers (IEEE), colloquially used to mean any serial digital output

sensor: a sensor converts a parameter, such as pressure, temperature, or chemical concentration into an electrical signal. See also "analyzer."

soft failure: a soft failure occurs when a sensor or analyzer fails such that its erroneous output cannot easily be distinguished from valid data. Loss of calibration is a good example of a soft failure.

store: data are stored in computers for various lengths of time. "Storing data," unless otherwise modified, implies that the data will eventually be overwritten by new data. If the data are to be saved permanently, the data are "archived."

7.2 TYPICAL SYSTEM

A data collection system gathers input from sensors, monitors, and analyzers then transmits, stores, and archives that data. Recorders may be part of

Copyright ASME International
Provided by IHS under license with ASME
No reproduction or networking permitted without license from IHS

Not for Resale

such a system. Figure 7.1 shows the major elements of a data acquisition system.

A data acquisition system starts with the sensors and analyzers, which convert the sample composition into electrical signals. These signals are digitized in an I/O (input/output) module. The digitized values are passed through a computer and stored. They may be further processed, such as production of hourly averages, and the results of that processing stored. These stored results may eventually be archived. The display function retrieves stored or archived values for examination and further data analysis. An optional function is transmission of data and derived data to another computer. Various groupings of data acquisition functions exist. For example, many analyzers now have digital output, which puts the I/O block in the same cabinet as the analyzer. A data logger is just the I/O block, computer, and archive block in a single package. Some chart recorders produce digital output for transmission. In the following discussion, the blocks will be considered discrete pieces, but where the combination of blocks is important, it will be treated as a special case.

7.2.1 Analyzers. Reliable data begins with the analyzers. The major manufacturers of analyzers can be found in the commonly available buyers' guides. Each analyzer should be evaluated on the inherent reliability of its underlying method, the likelihood of interference to that method (see Subsection 6.2), and the problems that the manufacturer has had with the analyzer. For example, most dissolved-oxygen analyzers measure the rate of oxygen diffusion through a membrane. This method is subject to error when the membrane is coated by oxides or other foulants. Another technique uses a chemical feedback system so that no oxygen is consumed in the total process. This type of analyzer provides accurate concentrations when fouled, but at the price of slower response. The details of the specific application drive the choice.

Analyzers generally have output for transmission. The relative merits of various transmission modes will be discussed in para. 7.2.3. However, it should be noted that all of the display information should be transmittable. This includes reading, range, alarms, and possibly instrument diagnostic messages. Even if the transmission is digital and in engineering units, it is important to know which range the instrument is using.

7.2.2 Recorders. Chart recorders, for the purpose of this Section, are devices which record input data on a paper chart. They provide a simple method of archiving data. The charts are more difficult to use than digital data, but they are a low cost alternative when the more complex systems are down for maintenance. Many chart recorders contain microprocessors and can auto-range, combine data to calculate a resultant point, and provide digital output for transmission, and as such may be considered for the I/O function. It should be pointed out that if the recorder provides the I/O function as well, it represents a single point of failure that can completely stop archiving of all analyzers providing data to that recorder. Some recorders also provide contact closures to drive annunciators or other devices.

7.2.3 Signal Transmission. Signals can be transmitted from the analyzers to the I/O in digital or analog form, and, if in analog form, by voltage or by current loop. Many analyzers can now be purchased with any one or several of these options. Others still provide only one or both analog output options. At this point in the discussion, digital transmission is taken to imply that the analyzer itself does the digitizing of the analog signal. If the signal is transmitted from the analyzer in digital form, there can be a requirement for many digital receivers at the computer. This situation can be resolved by digital multiplexers at increased cost and complexity. For analog transmission, although voltage is simpler, current loop has the inherent advantage that zero on the analyzer scale corresponds to a condition which can be distinguished from open circuit. Thus current loops have the advantage of detecting broken lines. Within limits, they are also tolerant of increases in resistance of the loop. Current loops tend to be low-impedance and hence less subject to noise than voltage transmission. The current-loop strategy is to be preferred when transmission is over long distance. For short distances of a few tens of feet, voltage may be acceptable, particularly if the transmission is through shielded twisted pairs of wires. It should be remembered that for multiple-range analyzers, the range is an important piece of information that must be transmitted to the data acquisition system. Various analog methods exist to do this including multiple contact closures and a stepped voltage function.

7.2.4 I/O. Data is converted from analog to digital form in the I/O module. The functionality of I/O varies greatly. The most complex, control-grade systems do substantial self testing and signal testing to determine open loops, open thermocouples, etc.,

Copyright ASME International
Provided by IHS under license with ASME
No reproduction or networking permitted without license from IHS

Not for Resale

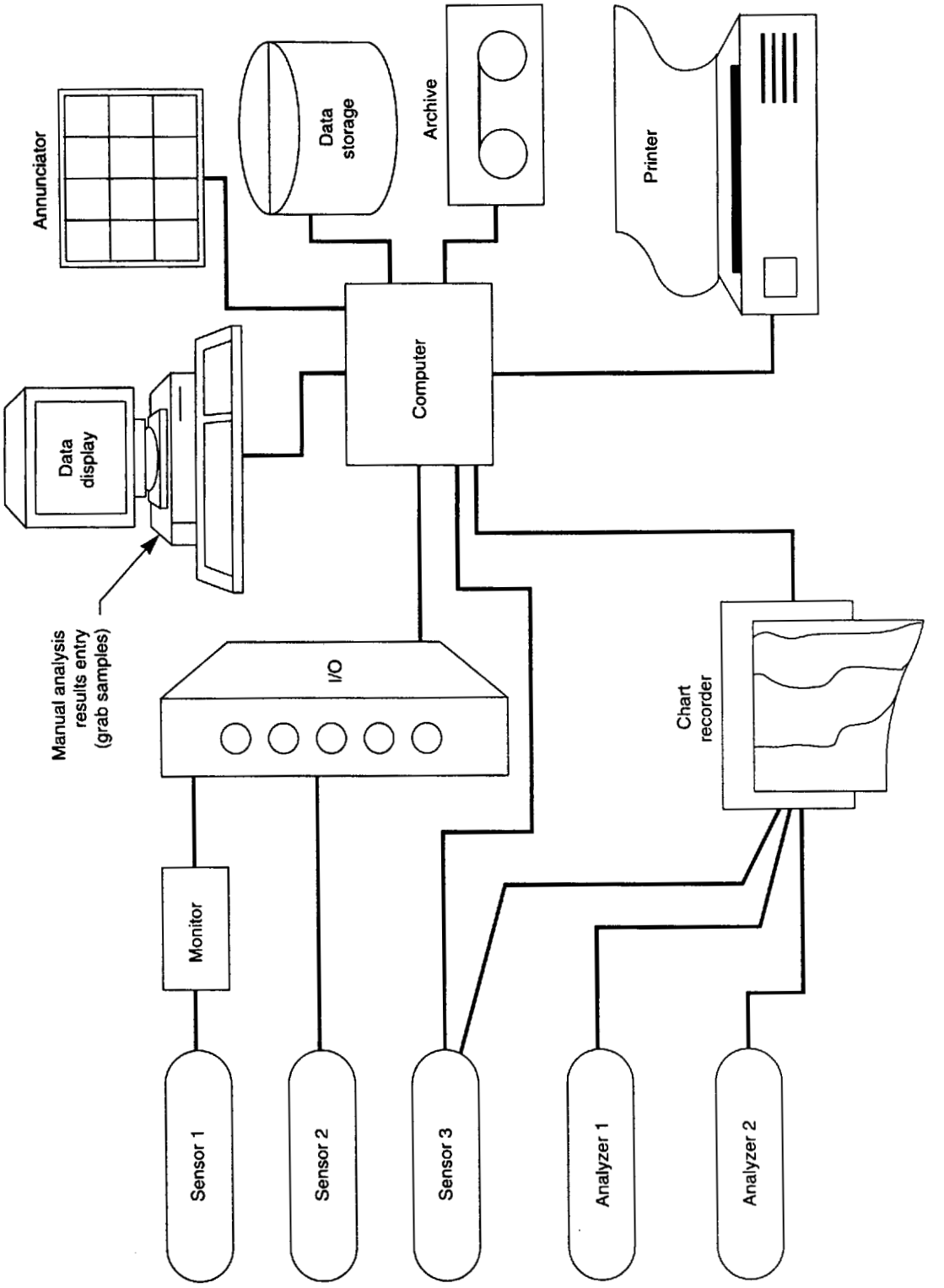

FIG. 7.1 MAJOR ELEMENTS OF A TYPICAL DATA ACQUISITION SYSTEM
GENERAL NOTE: This is not a recommended system.

Copyright ASME International
Provided by IHS under license with ASME
No reproduction or networking permitted without license from IHS

Not for Resale

and carry quality words to denote the state of the sensor value. Usual information in a quality word includes sensor out of scanning sequence, sensor at high limit, sensor at low limit, sensor in alarm, and the like. The minimum grade I/O returns only the digitized form of the analog signal.

7.2.5 Annunciators. Annunciators provide indications of upset conditions. They are often large panels with lighted fields to indicate which alarm(s) has occurred. They are driven by contact closures in the monitors, or possibly the recorders. When an alarm occurs, an audible signal can be generated and a section of the panel corresponding to the alarming analyzer flashes. The audible signal is silenced by acknowledging the alarm, and at the same time the flashing panel section illumination becomes steady. By judicious combination of signals in a logic system between the analyzers and the panel, the size of the panel can be reduced, but the alarming function is maintained. Only identification of the specific alarming analyzer may be lost. See also para. 7.2.6.6. These systems can be replicated by screen graphics of a data display.

7.2.6 Computer (Data management and storage). From the I/O the signal is transmitted by digital means to the data acquisition computer. The computer controls the storage and archiving of the data. It also supports the data display (see para. 7.2.8). The computer must be large enough in memory, processing speed, and data storage to accomplish all the required tasks. The archive is usually magnetic tape or magnetic disk. The required capacity of the storage must be carefully assessed as the data acquisition system is configured. Optical disk storage may become important in the near future. As the price of storage decreases, the importance of data compression (see para. 7.2.6.3) before archiving decreases.

7.2.6.1 Sampling Frequency. The frequency of data acquisition is dependent upon the use to which the data will be put. The usual Nyquist criterion of twice the frequency of the most rapidly changing signal applies. This usually leads to sampling frequencies in the range of once per minute to once every 5 minutes. The size of the archive is also important, since more frequent data acquisition uses up the archive faster.

7.2.6.2 Data Marking. Data acquisition systems can rapidly store immense quantities of data. Since this storage is automatic, the data may not be reviewed immediately and spurious data may be included in the archive. It is important to be able to mark data as invalid when it is not representative of the correct value of the parameter. For instance, calibration data should not be included in averages, and so it should be marked. Other reasons that data might be invalid include analyzer out of service for repair, analyzer on a different sample stream, no flow to the analyzer, and the like. It is better to mark the data than to remove it, since the accuracy of calibrations can be checked if the data is retained. It is possible to give each reason for invalid data its own code, but a single code of invalid data with the ability to make notes as to why data was not valid may be sufficient. It should be noted that the value of one sensor, such as a flowmeter at zero, can automatically indicate that the output of an analyzer on that stream is invalid.

7.2.6.3 Data Compression. Sometimes storage of all the raw data is required, but various data compression schemes exist to avoid long term storage of all raw data. One compression scheme is determination and storage of the high, the low, and the average value of a signal for a particular period, perhaps one hour. This compression can later be compressed again to a longer time period, perhaps one day. The conversion of data scanned at one minute intervals to high, low, and average for each hour provides a compression of 60 to 3, or a factor of 20. Conversion to daily average, high, and low provides a second factor of 24, for a total compression ratio of 480 to 1. Unfortunately, there is no way to recover any of the original data structure after this conversion. This compression method can be particularly appropriate if there is an archive of uncompressed data in the form of chart recordings and the digital low, high, and average is used as a summary to decide whether to examine the charts.

A second method of data compression, which allows approximate reconstruction of the original data stream, is dead-banding. When a datum is recorded, both the value and the time are stored. A range of values, or dead-band, around the recorded value is computed. When the signal leaves this dead-band, the time and new value are recorded and a new dead-band computed. When the data have the form of long periods of minimal variation, and short periods of major excursion, this technique can provide a compression ratio of 30 to 1 or more. Judicious choice of dead-bands is required to allow reconstruction of the features of an excursion. It may be appropriate to have several methods of calculating the dead-band, depending upon the value

Copyright ASME International
Provided by IHS under license with ASME
No reproduction or networking permitted without license from IHS

Not for Resale

of the signal. One reasonable strategy is to make the dead-band equal to half the significant change in the signal. The major disadvantages of dead-banding are the information lost if the dead-bands are too large and the fact that there is no way to determine, a priori, how much data storage will be required.

7.2.6.4 Manual Analysis Data. It is highly desirable to be able to integrate manual samples (grab samples) into the data management system. The most advanced data management systems can accomplish this task. If the manual samples are not combined with the on-line data, they will tend to be ignored in data analysis.

7.2.6.5 Data Archiving. The storage of data for future retrieval is an important part of the data acquisition system. Any data acquisition system should be able to reload old data for examination. Storage of the data should be for the longest relevant period. This period should certainly extend back to the previous turbine inspection, and preferably one before that. Ideally, data is archived until all equipment to which it is relevant has been replaced. This storage period pertains to recorder charts as well as the data from the data acquisition system.

7.2.6.6 Alarming. Another major task for the system is to provide alarms when the values of chemical parameters are out of range. It should be able to support time-based alarms, such as those appearing in the *Interim Consensus Guidelines on Fossil Plant Cycle Chemistry* (1) and the *Reference Manual for On-line Monitoring of Water Chemistry and Corrosion* (2) issued by the Electric Power Research Institute, *PWR Secondary Water Chemistry Guidelines — Revision 3* (3), and *BWR Water Chemistry Guidelines — 1993 Revision* (4). The time-based alarms are such that a low level alarm (Action Level 1) is increased to a second level alarm (Action Level 2) if the time period for Action Level 1 is exceeded. This alarming scheme is consistent with the way corrosion damage occurs, but is quite complex to implement.

The goal of an alarm system is to alert operators to situations which require their attention while allowing small, unimportant deviations to be ignored. This is not an easy goal to accomplish for chemistry data. First, the margin between usual and limiting conditions is commonly not large, and numerous small but meaningless deviations from the usual value can occur. The alarm values must be selected carefully, if the alarm system is both to detect the deviations and to produce a minimum of false alarms. Second, some of the analyzers are really not stable enough for the calibration to be trusted at all times. The number of false alarms from these analyzers can be very high. If the alarm limits are set higher to reduce these false alarms, important deviations in these parameters may occur without causing an alarm. Alarming on slope or change increases the effect of noise in producing false alarms.

7.2.7 Printers. The selection of a printer is based entirely on its intended use. Some of the considerations are size, reliability, readability, and paper feed system. If many columns are to be printed, a wide carriage is necessary. Tractor feed of continuous paper has the advantage that the output is forced to remain in chronological order. It is sometimes appropriate to have two or more printers. One prints periodic output and the other prints alarms. Still a third may be desired for special output, such as color graphics and charts.

7.2.8 Data Display. A data acquisition system must be able to display data. This display will generally have figures with embedded data, so that the current state of the system may be viewed. It will usually include tables of data. These tables may be fixed or may be constructed at the time of viewing. Trend plots, histograms (frequency of values within ranges), and scattergrams (pairs of related variables plotted against each other) are common forms of display. For long term review, summary plots, such as high, low, and average for each day of a month or year are very helpful. The display functions should be designed to support the data analysis.

A major function of the computer is to support display of the data. The display module may be a separate computer or a smart terminal. In simpler systems, it may be the main display of the data acquisition computer, which may be run in a multitasking mode. The display may be simply trend charts of the various monitor signals. It may contain groupings of the monitor signals around a particular piece of equipment. It may be graphic or simply tabular.

7.3 RELIABILITY

The required reliability for a data acquisition system is determined by the ultimate use of the data. If the data is the feedback in a control loop, such as an automatic chemical feed, high reliability is required. Otherwise the controlled device may be

Copyright ASME International
Provided by IHS under license with ASME
No reproduction or networking permitted without license from IHS

Not for Resale

driven to extremes when the feedback data do not respond. If the data are examined once per day, and there is no alarm function, low reliability may be tolerated. Any number of intermediate reliability levels can be imagined. For simplicity, the highest reliability requirement for a single data point should be assigned to the entire system; otherwise, the data acquisition system becomes a mixture of many different methods and maintenance becomes difficult. However, the cost of adding many points to a high reliability data acquisition system may be high enough to justify a complete system of lower cost and acceptable reliability, in spite of the increased maintenance training and costs.

The reliability of a data acquisition system is measurable with three criteria. First is the mean time between failure for the components. This criterion includes both hard-over failures and need to calibrate. The second criterion is whether a failure is inherently detectable by the data acquisition system. Third, the quantification of the maximum effect of a single component failure.

7.4 DATA ANALYSIS

Unless data are analyzed, there is little point in collecting them. A complete automated data acquisition system must make provision for data analysis. The analysis should not interfere with ongoing collection of data.

7.4.1 Correlation and Consistency Checks. There are numerous correlation and consistency checks which can be used to determine that data are self consistent or that a datum is suspect. In general, theoretical relationships between specific conductivity, ammonia concentration, and pH should be found in the plant data. When such relationships do not hold, the data must be viewed as suspect, or the reason for the invalidity of the theoretical relationships should be found. For example, in a pure ammonia system, the relationship pH = log(sp. cond.) + 8.57 can be expected to be valid. If the pH is less than the theoretical pH, there are several possible explanations. First is miscalibration of the pH electrode. Second is the presence of an acidic species which invalidates the assumption of a pure ammoniacal solution. Third is a short, or partial short, in the specific conductivity electrode. Other explanations may also be possible.

Other logical correspondences between data points should be examined. For instance, the cation conductivity calculated for the anions in an analysis should not be greater than the measured cation conductivity. Likewise, the concentration of a species should not change between two measuring points unless there is either a source (such as a chemical feed for ammonia) or a sink (such as condensate polishers for sodium) for the species.

7.4.2 Averages versus Specifications for Performance. The usual use of data is to improve control of a parameter. Plotting the average of the parameter over a period of time is often less useful than plotting the frequency of values in various ranges. These ranges might include normal range, first action level, second action level, etc.

7.4.3 Mass Balances. Mass balances can be important in finding the source of discordant data and in finding sources of impurities. Since mass is neither created nor destroyed in ordinary chemical processes, it follows that the sum of all flows of a substance into a point must be the same as the sum of all flows of the same substance away from the point, unless the substance is accumulating at the point.

7.4.4 Trends. Analysis of trends allows one to make predictions about when a variable will cross control limits. If a trend to higher values of a parameter is developing, extrapolation of the data to the control limit will indicate the time before the limit is reached. Corrective action can actually be taken without exceeding control limits. For example, such analysis can predict polisher exhaustion in time to replace the polisher at a convenient time before the polisher effluent has exceeded the control limit.

Since the chemistry of the power plant is dependent on many parameters, desirable plots include power level, flow rate, pressure and temperature of samples to the monitors besides the chemical parameters, blowdown rate, and other plant parameters of interest or concern. When producing such plots, it is desirable to keep time scales and parameter scales uniform throughout the plot sets to facilitate comparison.

7.4.5 Statistical Process Control. Statistical process control (SPC) consists of determining the critical variables to maintaining quality output, determining their limits, and determining strategies to keep them within their limits. A critical step in process control is determining acceptable output, that is, defining quality. Most processes are affected by many variables, but strongly affected by only a few. Variables with strong effect must be controlled to maintain the output quality. These variables will have ranges

Copyright ASME International
Provided by IHS under license with ASME
No reproduction or networking permitted without license from IHS
Not for Resale

where the output quality is still acceptable, and the ranges must be determined. Additionally, the interaction of variables must be determined. The acceptable ranges for variables must take such interactions into account.

When the acceptable ranges for control parameters have been determined, it is necessary to devise a strategy for keeping the parameters within range. This strategy must include reliable monitoring at an appropriate frequency. It must include the appropriate actions to be taken when a parameter is trending out of the acceptable range.

7.4.6 Diagnostics. In essence the problem of data analysis is one of detecting the deviations from normal and appropriate values and deciding which deviations are due to instrument error; which are real, but possibly self-correcting; and which are real and require action. People can do this, but the effort must be continual. The task consists of looking at the data and checking to determine that it is self-consistent. The causes of inconsistencies must be determined and the offending analyzer partially or totally ignored.

This procedure usually examines long periods of almost flat recorder traces, or in modern data acquisition systems, flat graphs on a screen. It tends to be routine, and people often have difficulty devoting adequate attention to the task. Repetitive analysis problems like this are often amenable to computer solutions. Diagnostic expert systems are a realistic way of approaching this problem.

The problems of simple alarming have been discussed in para. 7.2.6.6. Briefly, there are the concerns of noise resistance and detection of small deviations. Diagnostic systems combine the output of several sensors to produce each result. This combination makes them less sensitive to noise from any single sensor and yet able to respond to small deviations in several signals.

A diagnostic system for chemistry should support the plant chemist by removing routine diagnosis from his daily duties. The goal is to provide good advice and direct his work. Any system with that goal must distinguish between analyzer failure or miscalibration and a real plant chemical excursion. The effort involved in constructing an expert system which can reliably diagnose analyzer failures and the cause of a chemical excursion is on the order of man-years. (5)(6)

7.5 CONTROL

Feedback loops are used in power plant chemistry to control the concentrations of feed chemicals such as ammonia and hydrazine. In the feedback loop, the output of the relevant analyzer is used to control the quantity of chemical added. For instance, if the pH is too low, the feedback loop increases the feed rate of ammonia. This is a very useful function, since the necessary feed rate depends upon contaminate concentrations and feedwater flow rate. In sophisticated systems it is possible to combine several analyzer signals in the control of a single feed.

Feedback loops must be properly designed if they are to work correctly. They should be responsive, so that the parameter does not deviate greatly from the desired value. However, if they are too responsive, they can be unstable. For example, a small decrease in pH causes the ammonia feed rate to increase. If the system is too responsive, the pH then rises above the desired value and the ammonia feed rate is decreased, again too far. The overly responsive system tends to oscillate, and can oscillate at ever increasing amplitude. It is also important that adequate mixing of the chemicals occur before sampling. Otherwise, the system will respond to variations in concentration that are caused by incomplete mixing in the stream sampled.

7.6 SUMMARY

Data acquisition systems can be designed at various levels of reliability and complexity. The purpose of the system and the user requirements are an important part of the design of a data acquisition system. This Section has outlined the issues that need to be addressed. The user must design the system to conform to his requirements.

7.7 REFERENCES

(1) Interim Consensus Guidelines on Fossil Plant Cycle Chemistry. EPRI CS-4629, 1986.

(2) EPRI Reference Manual for On-line Monitoring of Water Chemistry and Corrosion. RP8044, March 1995.

(3) PWR Secondary Water Chemistry Guidelines — Revision 3. EPRI TR-102134, 1993.

(4) BWR Water Chemistry Guidelines — 1986 Revision. EPRI TR-103515, 1994.

(5) Bellows, James C. "An Artificial Intelligence Chemistry Diagnostic System." *Proceedings 45th In-*

Copyright ASME International
Provided by IHS under license with ASME
No reproduction or networking permitted without license from IHS

Not for Resale

ternational Water Conference. Pittsburgh, Pennsylvania, 1984, 15-23.

(6) Bellows, James C., Karen L. Weaver, and James Gallatin. "On-Line Chemistry Diagnostics." Proceedings 49th International Water Conference. Pittsburgh, Pennsylvania, 1988, 414-19.

Copyright ASME International
Provided by IHS under license with ASME
No reproduction or networking permitted without license from IHS

Not for Resale

APPENDIX A — LEAKAGE DETECTION AND MEASUREMENT

(This Appendix is not a part of ASME PTC 19.11-1997.)

A.1 INTRODUCTION

A.1.1 GENERAL

This Appendix specifies methods and apparatus for detecting, locating, and measuring leaks into the power cycle. The leaks of primary concern are contaminants from the cooling water cycle into the condensate cycle and of air into the condensate and feedwater cycle. Other leaks such as boiler tube leaks and heater leaks that may affect test results are also addressed. The term leakage as used in this Appendix is defined as the material which escapes its normal confining barrier.

Leakage of cooling water and air in-leakage into the steam space of the condenser must be at or less than the maximum permissible level specified in the governing Performance Test Code, before a performance test of a turbine and condenser is conducted. In general, a condensate or a feedwater flow measurement test is not started until the parties agree that the leakage is within acceptable limits.

After initial construction or rework of the condenser, the cold water hydrostatic pressure test is the most commonly used off-line method to detect potential condenser cooling water leaks and condenser air in-leakage. Dyes are often used with this method.

Load changes may cause temporary false indications of condenser leakage, since changing load may cause a washing of deposited material from the turbine and heaters, which in turn will affect physical and chemical ion measurements.

Although specific safety concerns are not within the scope of this Supplement, the reader should address all safety concerns whether dealing with the mechanical equipment or chemicals in applying any procedures referenced.

A.1.2 COOLING WATER LEAKS

The primary methods for detecting cooling water leaks into the steam space, while the condenser is in service, include cation conductivity, selective ion analyzers, and tracer techniques.

Methods for locating the cooling water leaks include dyes, tracer, plastic film, flexible diaphragm, soap bubble, eddy current, sonic pulse and ultrasonic techniques. The ultrasonic technique requires a unit outage.

A.1.3 AIR IN-LEAKAGE

The most direct method for detecting air in-leakage is monitoring the flow measurement devices on the air ejectors or pump discharges. In addition, monitoring performance parameters such as condenser pressure, hotwell oxygen concentration, and subcooling will aid in identifying excessive air in-leakage.

Methods for locating air in-leakages include ultrasonic testing, infrared imaging thermography, and tracer testing in addition to the hydrostatic pressure test. Use of the tracer method of helium has increased significantly because of its increased sensitivity and effectiveness in locating leaks.

A.1.4 TEST RESULTS

Leakage into or out of the power cycle will affect test results. Cooling-water leakage measurements can be used to correct observed and calculated test data. However, the leakage data must be obtained with accuracy equivalent to the accuracy of the test data.

A.2 COOLING WATER IN-LEAKAGE

A.2.1 GENERAL

Cooling water in-leakage can quickly cause a power generating station to be forced into a reduced load condition necessary for the application of condenser leak detection techniques. In the worst case, the station can be forced into an immediate shutdown to prevent formation of scale and/or corrosion in systems. When a condenser leak occurs that affects plant performance, it is of highest priority to find and correct the leak in the shortest possible time.

Copyright ASME International
Provided by IHS under license with ASME
No reproduction or networking permitted without license from IHS
Not for Resale

The choice of leak detection methods depends on the size of the leak and the type of instrumentation that is available. With a large leak, such as a cracked or broken condenser tube, simple methods can rapidly locate the failure. Small leaks that seep and change their leakage rate with load cycles require precise application of sensitive methods. Condenser design also effects how samples to detect in-leakage should be taken. The condenser manufacturer should be consulted for recommended sampling locations.

The following summarizes methods that are in common use.

ON-LINE

(1) Cation and degassed cation conductivity

(2) Selective ion sodium analysis

DIFFERENTIAL PRESSURE METHODS (Vacuum)

(3) Sonic detection

(4) Plastic film

(5) Foam testing

(6) Helium mass spectrometer leak detector

OFF-LINE

(7) Hydrostatic pressure method

(8) Fluorescent-tracer method

A.2.2 ON-LINE METHODS

A.2.2.1 Cation conductivity is the most common and reliable process instrumentation used for monitoring condensate water quality and for early detection of cooling water in-leakage. This method is dependent upon the conversion of cooling water salts to their corresponding acids by passing a continuously flowing condensate sample through an acid regenerated cation exchange resin column.

The conductivity of the cation column effluent is compared to usual value and theoretical water value. The conversion of salts to their corresponding acids causes a significant increase in the cation conductivity of the sample.

A.2.2.2 Selective ion sodium analysis provides a quantitative value for cooling water contamination with a very high level of sensitivity. This method can have a fast response time for detecting rate of change.

A.2.3 DIFFERENTIAL PRESSURE METHODS (Vacuum)

The vacuum method for cooling-water leak detection requires access to the water boxes of the condenser. There must be a vacuum on the steam side on the order of 18 inches of mercury. These tests can be made with only one section of the condenser water boxes drained and with the condenser on-line under full vacuum.

A.2.3.1 Ultrasonic detection is a rapid method for positive location of relatively large condenser leaks. The portable instrument consists of a directional microphone, receiver, and headphones. The microphone is sensitive to high frequency sound emitted by air passing through the tube-leak. The high frequency sound is amplified and transmitted at an audible frequency through earphones with its amplitude displayed on an analog display.

By scanning the condenser tube sheet, the general location of the leaking tube can be discerned. Closer scanning of individual tube-ends can identify an individual tube leak.

When external noise masks detection of a leaking tube, instrument sensitivity can be enhanced by wrapping cardboard-supported foam insulation around the microphone to block out all sound detection from the sides and rear of the microphone. A $^1/_2$ in. PVC pipe about 8 in. long attached to the front of the microphone and supported by the insulation can make sound detection highly directional.

A.2.3.2 Plastic film or clear polyethylene [commercially available (household use)] can be used to locate all but the very small condenser tube leaks. Strips of plastic film simultaneously applied to opposite ends of a condenser tube sheet, with the condenser under vacuum, can seal off in-leaking air. The plastic film will be pulled into the leaking tube thereby providing positive identification of the failed condenser tube.

If the tube sheet has irregular tube-ends, a tight seal may be difficult. Shaving foam can be applied to an area of the tube sheet for the plastic film to seal against to achieve the positive seal needed for leak detection. Spraying the tube sheet with detergent to break water surface tension will allow residual water in the tubes to drain and improve the effectiveness of the foam application.

A.2.3.3 Foam testing can be a fast and effective method of positive detection of even the smallest condenser tube leaks. Commercial foam generators have the capacity to produce excessive amounts of foam, making small leak detection difficult. Foam must simultaneously and conservatively be applied to opposing tube sheets.

Excess water must be drained from condenser tubes with a detergent spray. Foam should be applied to simultaneously seal opposing tube ends. A squeegee or the hand can wipe excess foam from the tube sheet. A leaking tube will be exposed when the foam plug is pulled into the condenser tube.

Copyright ASME International
Provided by IHS under license with ASME
No reproduction or networking permitted without license from IHS
Not for Resale

A.2.3.4 Helium mass spectrometer leak detection is perhaps the most sensitive method available. This method requires a helium mass-spectrometer, but is much more sensitive than other leak detection methods. Excessive use of the helium gas may cause loss of sensitivity for low-level leak rates.

A.2.4 OFF-LINE METHODS

A.2.4.1 Hydrostatic Pressure Method. This method is applicable when the water boxes of the condenser can be opened and the steam space filled with water. The test should include as much connected piping as is practical.

The method is used only when (1) the condenser shell can sustain the required weight of water, (2) the construction of the condenser and its supports are adequate to support the dead weight loading (an auxiliary spring system or blocks may be required to provide additional support), and (3) the required water level and temperature are appropriate to the turbine.

Caution: This determination will require consultation with the turbine and condenser manufacturer.

A.2.4.2 Fluorescent-Tracer Method. The ultraviolet-light fluorescent-tracer method provides a quick procedure for locating pinholes, cracks, and tube-end leaks. Inclusion of connecting piping with the condenser, to the extent practicable, may locate significant air leaks as well as the points of circulating water in-leakage. Unlike the inspection incidental to hydrostatic-pressure testing, ultraviolet-light testing does not require that the examined surfaces be dry before the test is made. Consequently, a fluorescent tracer may be added to the water previous to the final inspection of the hydrostatic-pressure test and ultraviolet light would then be used to reveal any very small leaks (from the condenser steam space into the cooling water space or through joints to the atmosphere).

A.3 CONDENSER AIR IN-LEAKAGE

A.3.1 GENERAL

Air in-leakage can be detrimental to a steam turbine system in two ways. First, if the air in-leakage rate is large compared to the exhaust capacity, it will cause an increase in the turbine backpressure. Increased turbine backpressure decreases the efficiency of the turbine, with resulting increase in fuel costs. In extreme cases, and especially at low load, the increased backpressure can cause heating or flutter and possible failure of the last row turbine blades or buckets. Second, air in-leakage can have detrimental effects on the system chemistry. Air in-leakage introduces oxygen and carbon dioxide to the condensate system and requires mechanical removal to prevent corrosion and reduce the burden on chemical treatment. Oxygen is well known to be a problem in many systems and is the chief chemical reason that air is excluded.

Carbon dioxide is the second air component with detrimental chemical effects. Corrosion of feedwater piping by carbon dioxide was the original reason for adding ammonia to steam systems. Carbon dioxide exhausts anion resin in condensate polishers, causing silica or chloride break-through.

A.3.2 LIMITS

No specific recommendations for air in-leakage limits are available. Typically, turbine manufacturers recommend air in-leakage, even in the largest systems, to be limited to 6 scfm (standard cubic feet per minute). One turbine manufacturer uses this limit for large nuclear machines and suggests 1 scfm per 100 MW for fossil machines.

A.3.3 DETECTION/LOCATION

(a) Air in-leakage may be most easily detected by the exhaust rate from the air removal system. Oxygen and carbon dioxide concentrations in condensate also indicate air in-leakage. The relationships between air in-leakage rate, oxygen concentration, and cation conductivity are complex and have been explained in the literature. (1)

(b) There are a number of methods to search for air in-leakage. Ultrasonic detectors have been used with some success to locate leaks. A leak acts as an ultrasonic whistle, and the sound produced can be detected by converting it to an audible frequency. The microphone can be made highly directional to assist in locating the leak.

(c) A second method is thermography. Since the equipment is generally warmer than the surrounding air, an air leak will be cooled as the air passes through it. Infrared images will show air leaks as cool spots on otherwise warm equipment.

(d) Tracer chemicals have also been used to locate air in-leakage. Generally, a detector is placed at an appropriate point on the air exhaust system and the tracer chemical is sprayed on areas suspected of leaking. Leaking areas cause detector responses. There is a delay while the tracer passes from the leak to the detector. In places with high steam flow, such as those around the condenser, the delay is short. On piping areas between the hotwell waterline and the condensate pump discharge, the delay can be many minutes,

Copyright ASME International
Provided by IHS under license with ASME
No reproduction or networking permitted without license from IHS
Not for Resale

since the tracer must follow the water around the cycle. In dead legs or other areas of low flow, the delay can be very long since only the air flow carries the tracer into the condenser.

(e) CFC, sulphur hexafluoride, helium, and other chemicals have been used as tracers. Helium has two advantages. It does not form pools of tracer gas in confined areas. These pools occur if the tracer gas is heavier than air and tends to settle. Helium tends to rise, and also diffuses rapidly in air. The second advantage of helium is that it is inert. Most other chemicals can decompose at steam generator temperatures to form acids, particularly hydrochloric and hydrofluoric acids. Helium has the disadvantage that it must be transported in pressurized cylinders while other tracer gases may be compressed to liquid form and handled much more easily. Tracer gas techniques can be calibrated to give an indication of the size of the leak located, but there are enough variables that the quantification of leak size is difficult.

A.4 DETECTING/LOCATING LEAKS IN THE CYCLE

A.4.1 GENERAL

For test purposes, leakage must be eliminated, reduced to an amount that all parties concerned will agree to ignore, or measured with an accuracy commensurate with the precision of the performance test. Leaks are frequently indicated by a consequential contamination and the problem is then to find the location. The methods discussed in this Appendix have been used successfully for detecting visible leaks, water in-leakage, and air in-leakage. The check list is drawn from utility experience and the comments summarize contemporary expertise.

A.4.2 CLASSIFICATION OF LEAKS

(a) Visible leaks are vapor or liquid discharges to the atmosphere that frequently can be heard as well as seen.

(b) Invisible in-leakage is an introduction into the system of air or water through imperfect joints, cracks in containers, and pinholes in castings.

(c) Recirculated leakage is internal short-circuiting of feedwater in heaters. The feedwater discharges into the steam space which drains back to the condenser hot well. Such leakage is important in heat-rate tests if it is metered as feedwater but bypasses the boiler and prime mover.

(d) Visible and invisible losses include vent emissions, slow vapor leaks, unsecured valve discharges, sewered drains, and samples.

A.4.3 CONDENSER LEAK

When a condenser leak is indicated by on-line cation conductivity or sodium analysis, its general location can be determined by on-line isolation and draining of individual water boxes while monitoring both cooling water elevation and cation conductivity or sodium analysis values. A clear plastic tubing water column is installed on the water box to be drained. The water level is monitored as the water box is drained while also monitoring on-line cation conductivity and/or sodium values. Increased sample flow to the analyzer will shorten response time while the isolated water box is drained. Note the water level when the leaking tube is uncovered. This simple and effective procedure confirms the leak and gives its relative elevation in the water box as well as an indication of the size of the leak.

A.4.4 DETECTION OF VISIBLE LEAKS

(a) The most reliable method for detecting out-leakage from installed system components is careful isolation and hydrostatic testing with close visual inspection. The method also permits demonstration of recirculating leaks between feedwater and steam space in heat exchangers. A visible rise of water in a hot well or steam space gage-glass indicates leakage from the pressurized water side of the tubes.

(b) Leakage of inline valves is detected by the appearance of water from a telltale drain installed in the line between two closed valves. If a second valve cannot be installed temporarily, an open drip on a closed-off section of pipe downstream of the valve may be used. Double-seated straight-way valves may be similarly tested with a telltale drain at the bottom of the body between the seats.

(c) An unexpected variation in pipewell temperature is usually an indication of leakage into the piping. Steam trap blow-through is one example.

(d) Flow-measuring elements installed at the inlet and outlet of a group of heaters permit evaluation of major recirculated leakage.

(e) Leakage at expansion joints in low-pressure steam-extraction lines may be first evidenced by a drop in extracted steam pressure. When such joints are located in the turbine exhaust trunk, they may be disclosed during hydrostatic testing if the water level can be made high enough.

The site of leakage from inaccessible piping can be determined by several techniques, including the following.

(a) Isolation and pressure-drop techniques — One end of pipe is closed and fitted with an air connection and a pressure gage. Sections of the pipe starting from

Copyright ASME International
Provided by IHS under license with ASME
No reproduction or networking permitted without license from IHS
Not for Resale

closed end are progressively isolated. A leak in the section is indicated when applied air pressure falls rapidly. To locate the leak, an air bladder is so fitted as to permit its being pulled (deflated) through the leaking section of pipe. A rubber tube inserted through the open end of pipe is used to inflate the balloon by hand pump. The inflated balloon is then pulled toward the open end and its travel is measured. The leak is found when the gauge pressure falls because the inflated balloon is just beyond the leak and no longer blocks it off.

(b) If the piping has a known slope, the leak site can be located by attaching a water column to the low point after isolating the line. When pipe and column are filled with water, the level in the column will recede to the level at which the pipe is leaking.

(c) Where permissible, a radio-isotope tracer, such as radioactive iodine, sodium, or similar short-lived material could be passed through a pipe that is buried underground. The adjacent earth would then be scanned with a Geiger counter and the leakage site would be located from the geometry of the radioactive leak-contaminated soil. The excess of isotope must be thoroughly flushed from the line before the earth is scanned.

A.4.5 DETECTION OF LIQUID IN-LEAKAGE

(a) Dissolved-solids accumulation in the boiler water indicates either condenser leakage, other raw-water in-leakage, demineralizer malfunctioning, or high evaporator carryover. Proper remedial action includes prompt location of in-leakage points.

(b) In-leakage of untreated water other than condenser leakage can be detected by testing selected water samples. Samples of effluents from the condensate hotwell, makeup source, deaerating heater, and boiler feed pumps are especially useful for this purpose. Monitoring the water purity at these points will provide rapid and reliable indication of the source of the in-leakage in many instances.

(c) Rapid exhaustion of the polisher may indicate condenser leaks.

(d) A non-radioactive tracer may be used if the available test method is sufficiently sensitive and the background concentration is low.

(e) Where permissible, radioactive tracers can be applied under careful control if suitable detection techniques are used.

(f) In-leakage from the primary into the secondary (power) loop of a pressurized water reactor may be estimated by a tracer technique that measures the ratio of specific nuclide activities.

(g) Two generally recommended methods for indicating in-leakage of untreated water are conductance, when the water in the system is of low purity, and either flame-photometric or ion-sensitive-electrode sodium when it is of high purity. The conductance method is improved by the use of acid-cation exchange for conductivity amplification.

A.4.6 DETECTION OF AIR IN-LEAKAGE

(a) Oxygen from air in-leakage or water-entrained air in improperly deaerated feedwater and condensate promotes the deterioration of materials of construction in the system. One result is the corrosion product contamination of the system water.

(b) In-leakage of air into low-pressure portions of the system is a serious source of dissolved oxygen in system water. Leaks into low-pressure heaters, piping, pump seals, and valve packing will contribute oxygen, especially if leakage is located below the water level maintained in the equipment. To prevent such in-leakage, the equipment must be kept tight.

(c) Oxygen determinations on water samples drawn from carefully selected points of the system can detect air in-leakage. Samples taken downstream of suspected possible points of air entry are preferred for such monitoring, and a scheme of sampling with this objective must be worked out for any particular cycle arrangement. Cycles differ so much that it is not possible to describe a general sampling scheme.

(d) Continuous oxygen monitoring with recording is desirable to disclose air in-leakage since cycles under generally good control may take in air only during periods of low-load operation, startup, shut down, severe swings in load, and overload operation (of deaerators). Continuous oxygen analyzers have been used successfully for this purpose.

A.4.7 DETECTION OF LEAKS IN BOILER TUBES

(a) Leaks in boiler tubes are usually detected by hydrostatic test.

(b) Leaks occurring in the tubes of operated boilers are usually noisy and readily detected. Complete reliance on noise level may be impractical when the leakage is small or the boiler is a pressurized unit. An increase in the makeup rate and a loss of storage may be the first indication of a small leak in boiler. Ultrasonic devices have effectively confirmed such leaks in some instances.

(c) Unsuspected internal leakage in the reheat section of a drum type boiler was disclosed during an experimental application of a radioactive tracer technique.

Copyright ASME International
Provided by IHS under license with ASME
No reproduction or networking permitted without license from IHS
Not for Resale

(d) Tritium was the tracer used in the tests, the working party was especially trained, and the leakage was appreciable.

(e) Peripheral hazards associated with the use of radioactive tracers necessitate very careful review of any proposal to apply such procedures, especially for routine monitoring.

A.4.8 LOCATING LEAKS

(a) Heater drips, drip pumps if discharging into the cycle, and similar return flows to the feedwater system are all possible points of re-entry of contamination, recirculating leakage, and air in-leakage.

(b) All piping, interconnections, and valves between the feedwater system and other water are frequent sources of contamination. Careful, routine examination of these sites is important, especially if disclosure by monitoring is not practical. In-leakage of low quality water may result from poor design or placement of surge tanks and their interconnections.

(c) Heating load returns should be checked closely and frequently for in-leakage contamination, especially when the load includes coil heating of sanitary water.

(d) Check returns from fuel heating and drip tank systems, the latter for air in-leakage (as indicated by dissolved oxygen).

(e) Perforation of sample cooler tubing will permit in-leakage of untreated water to contaminate the sample and the cycle to which it is returned. The quality of the sample should be checked periodically if the monitored component will not disclose such contamination.

(f) Quality of the condensed evaporator vapor, especially on startup of the evaporator, is pertinent to interpreting results at other check points.

(g) Check suction side of condensate and boiler feed pumps for piping leaks.

(h) During startup, shut down, and at low load, the steam supply to certain heaters may be inadequate to maintain above-atmospheric pressure. Air in-leakage may occur when operating such equipment at reduced pressure. During low-load period, low-pressure heaters, deaerator vents and valves, gage glasses, and joints should be checked for air in-leakage.

(i) The first step in an air in-leakage test is the development of a list of all possible leaks. This includes all joints that may be under vacuum. Table A.1, which combines Tables II and III of Baldino, et al. (1), lists some of the most common leakage points. The gland seals of turbines, flanges, and valves are the most common source of air in-leakage. It must be remembered that some locations become air leaks at low load when the pressure in the turbine is reduced. Some of these leaks may not leak steam at full load. A systematic examination of all possible leak points is then conducted. Often the largest leaks will be found on regions where parts have been dismantled and reassembled. Other areas to check are those which have gone through pronounced thermal transients. It has been noted in some cases that a portion of the air in-leakage will correct itself as a system reaches thermal stability after startup.

TABLE A.1
COMMON AIR LEAK LOCATIONS

Turbine gland case vertical joint	Turbine gland seal labyrinth
Turbine horizontal joint	Turbine rupture diaphragms
Condenser penetration welds	Neck heater penetrations
Condenser manways	Valves on lines into condenser
Waterbox flanges	Feedwater heater penetrations
Valves and flanges	Condenser boot
Diaphragm on crossover pipes	Drain from gland condenser
Extraction piping	Drain from traps on steam jet Air ejector

It should be recognized that condensed steam used for turbine gland seals may become contaminated with oil as well as air.

(j) Untreated water in-leakage may result from irregular performance of a demineralizer or polisher. Silica breakthrough sometimes occurs before the increase in dissolved solids is detectable by the conventional conductivity monitor.

(k) Contamination of desuperheated steam may result if the source of desuperheating water is exposed to contamination. A slight condenser leak or peaks of chemical treatment may cause serious steam contamination from the desuperheating water without having serious effect on feedwater quality.

(l) Check for oil in the system water, especially after a power failure. Also, it should be recognized that condensed steam used for turbine gland seals may become contaminated with oil as well as air.

(m) On a new system, it is important that all joints, including welded joints, be examined. Once a welded joint is repaired, it is unlikely to allow further leakage, but the possibility cannot be neglected in situations where air in-leakage has been extremely hard to locate.

It is difficult to find small leaks in the presence of large ones. The general strategy for air in-leakage

Copyright ASME International
Provided by IHS under license with ASME
No reproduction or networking permitted without license from IHS
Not for Resale

reduction must be to find large leaks in easily accessible regions and seal those. These regions are then examined for smaller leaks. After easily accessible regions have been well sealed, more difficult regions are investigated. Some of the more difficult to detect leaks are those under insulation, where the tracer gas does not penetrate easily, and where it may go through a long tortuous path before it reaches the leak. The insulation may also reduce the acoustic intensity to ultrasonic detectors and make thermography difficult.

A.4.9 SEALING LEAKS

When a leak is located, there are several options for sealing it. If the region can be isolated, dismantling and proper re-assembly may be the appropriate option. Often, however, the location of the leak is such that the unit must be taken off the line to make a permanent repair. In such cases, RTV (room temperature vulcanizing) silicone rubber has been used successfully to seal leaks. Some experiments have been conducted with silicone rubber foams to seal leaks. This technique shows promise, but application problems still exist.

A.5 REFERENCE

(1) Baldino, F.X., J.C. Bellows, J.E. Richard, B.B. Seth, W. M. Jackson. "Air In-Leakage Control in Power Plant." American Power Conference 45 (1983).

A.6 BIBLIOGRAPHY

"Condenser In-leakage Monitoring System Development." September 1982, EPRI-NP-2597.

"Condenser Performance Test and Back-Pressure Improvement." April 1988, EPRI-CS 5729.

Robert B. Hahn. "Detection and Repair of Air and Water In-Leakage in Surface Condensers." ASME/ IEEE Power Generation Conference, 1986, 86-JPGC-PWR-6.

"Recommended Practices for Operating and Maintaining Steam Surface Condensers." EPRI CS5235, July 1988.

Rowe, M. and J.A. Ferrison. "Air Cooling and Venting Arrangements in Steam Condensers." ASME Paper No. 84-JPGC-PWR-12, Toronto Conference 1984.

Weaver, K., M. Twerdochile, and J. Bellows. "On-line Monitoring of Steam Turbine Air In-leakage." 1988 ASME/IEEE Power Conference 88-JPGC/ PWR-3.

Copyright ASME International
Provided by IHS under license with ASME
No reproduction or networking permitted without license from IHS
Not for Resale

APPENDIX B — THROTTLING CALORIMETER

(This Appendix, adopted from Ref. 1, is not a part of ASME PTC 19.11-1997.)

When steam expands adiabatically without doing work, as through an orifice, the enthalpies of the high and low pressure steam are equal, provided there is no net change in steam velocity. Such an expansion is termed throttling. As can be seen from a Mollier chart (Fig. B.1), wet steam with an enthalpy exceeding 1150 Btu/lb (2675 kJ/kg) becomes superheated when throttled to atmospheric pressure. The temperature of the expanded steam determines the enthalpy, which may be used with the pressure of the wet steam to determine the percent moisture in the wet steam sample.

The foregoing principle is used in various forms of throttling calorimeters. Each incorporates a small orifice for expansion of the steam sample into an exhaust chamber, where the temperature of the expanded steam is measured at atmospheric pressure. Velocity changes in properly designed calorimeters are negligible. The variations in the different designs are chiefly in the means of shielding the unit from external temperature influences. At pressures below 600 psi (41.3 bar), the calorimeter shown in Fig. B.2 is used. This is a small, low cost, simple, accurate instrument which gives good results for steam having appreciable quantities of moisture: up to 4.3% at 100 psi (6.9 bar), 5.6% at 200 psi (13.8 bar), and 7.0% at 400 psi (27.6 bar).

Figure B.2 shows the calorimeter installed and ready for use. The connection should be short; the connection and the calorimeter should be well-insulated. It is essential that the calorimeter discharge be completely unobstructed so that no backpressure can build in the exhaust chamber. The orifices must be clear, full opening, and of the correct diameter: 0.125 in. (3.175 mm) for pressures from atmospheric to 450 psi (31.0 bar) and 0.0625 in. (1.588 mm) from 451 to 600 psi (31.1 to 41.4 bar). The thermometer should be immersed in oil of suitably high flashpoint. The calorimeter is operated by fully opening the shutoff valve and letting the steam discharge through the unit to the atmosphere. The calorimeter must be thoroughly warmed up and in temperature equilibrium before normal temperature or test readings are taken.

In obtaining calorimeter readings, the temperature of the expanded and superheated steam is measured by a thermometer inserted in the thermometer well. Due to radiation from the calorimeter installation, thermometer corrections, and orifice irregularities, the observed temperature is generally lower than the actual temperature. To determine a suitable correction, the as-installed temperature of the calorimeter should be determined. This can be done by taking readings when the boiler is known to be delivering dry saturated steam. This is the case when the boiler output is steady at about 20% of rated capacity with low rate concentration and steady water level. The normal correction is obtained by subtracting the as-installed temperature from the theoretical temperature, read from the zero moisture curve of Fig. B.3. The normal correction should not exceed 5°F (2.8°C). If it does, the calorimeter orifice is clogged, the insulation is faulty, or some other test feature is incorrect. When the unit is used to determine the quality of a wet steam sample, the percent moisture can be found from the curves of Fig. B.3 using measured drum pressure and corrected calorimeter temperature. When properly installed, insulated and operated, the calorimeter temperature can give accurate results for steam moisture contents as low as 0.25% for low pressure boilers. For pressures above 600 psi (41.4 bar) and for greater accuracy of steam purity measurement in the low ppm range, other methods of measurement should be used.

REFERENCE

(1) "Steam: Its generation and use," Fortieth edition, Stultz, S.C. and J.B. Kitto, eds, The Babcock & Wilcox Company, Barberton, OH, USA, 1992, Chapters 2 and 40. (Used with permission.)

Copyright ASME International
Provided by IHS under license with ASME
No reproduction or networking permitted without license from IHS
Not for Resale

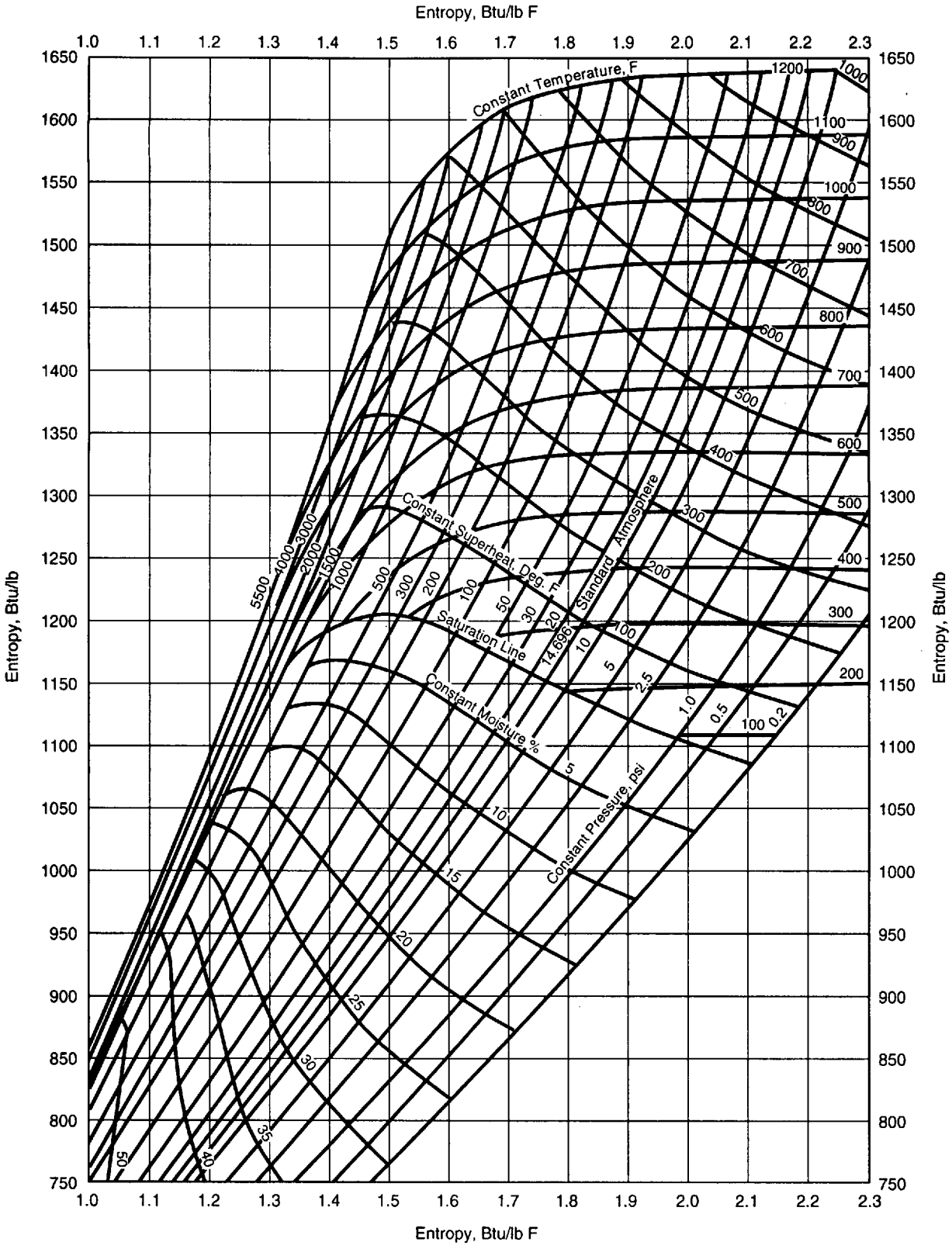

FIG. B.1 MOLLIER DIAGRAM (H-s) FOR STEAM

Copyright ASME International
Provided by IHS under license with ASME
No reproduction or networking permitted without license from IHS
Not for Resale

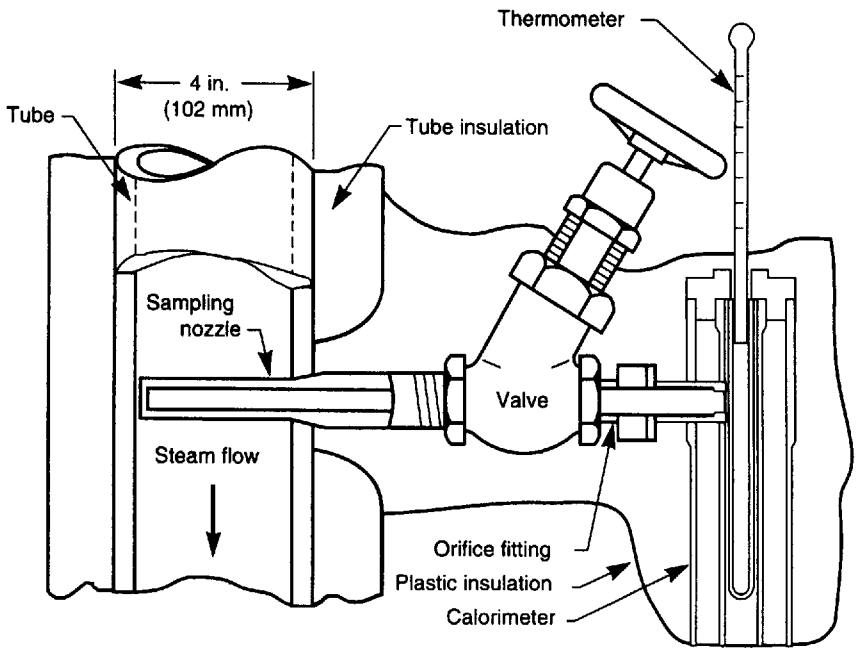

FIG. B.2 THROTTLING CALORIMETER SHOWING SAMPLING TUBE INSTALLED IN STEAM PIPE

Copyright ASME International
Provided by IHS under license with ASME
No reproduction or networking permitted without license from IHS
Not for Resale

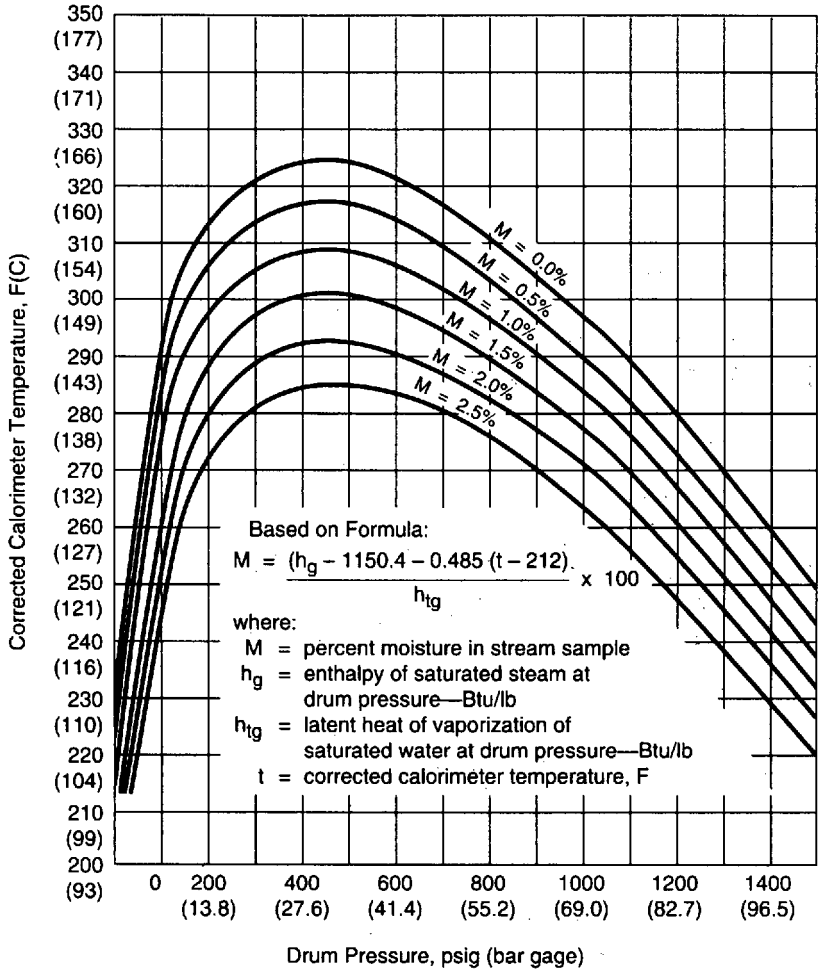

FIG. B.3 PERCENT MOISTURE IN STEAM VERSUS CALORIMETER TEMPERATURE

Copyright ASME International
Provided by IHS under license with ASME
No reproduction or networking permitted without license from IHS
Not for Resale