ASME PTC*19.10 81 ■ 0759670 0051798 3 ■

AN AMERICAN NATIONAL STANDARD

ANSI / ASME
PTC 19.10 - 1981

PART 10

Flue and Exhaust Gas Analyses

INSTRUMENTS AND APPARATUS

Supplement to ASME PERFORMANCE TEST CODES

THE AMERICAN SOCIETY OF MECHANICAL ENGINEERS
United Engineering Center
345 East 47th Street New York, N.Y. 10017

Copyright ASME International
Provided by IHS under license with ASME
No reproduction or networking permitted without license from IHS
Not for Resale

ASME PTC*19.10 81 ■ 0759670 0051799 5 ■

PART 10

Flue and Exhaust Gas Analyses

ANSI/ASME PTC 19.10 - 1981

INSTRUMENTS AND APPARATUS

THE AMERICAN SOCIETY OF MECHANICAL ENGINEERS
United Engineering Center
345 East 47th Street New York, N.Y. 10017

Copyright ASME International
Provided by IHS under license with ASME
No reproduction or networking permitted without license from IHS

Not for Resale

This code or standard was developed under procedures accredited as meeting the criteria for American National Standards. The Consensus Committee that approved the code or standard was balanced to assure that individuals from competent and concerned interests have had an opportunity to participate. The proposed code or standard was made available for public review and comment which provides an opportunity for additional public input from industry, academia, regulatory agencies, and the public-at-large.

ASME does not "approve," "rate," or "endorse" any item, construction, proprietary device, or activity.

ASME does not take any position with respect for the validity of any patent rights asserted in connection with any items mentioned in this document, and does not undertake to ensure anyone utilizing a standard against liability for infringement of any applicable Letters Patent, nor assume any such liability. Users of a code or standard are expressly advised that determination of the validity of any such patent rights, and the risk of infringement of such rights, is entirely their own responsibility.

Participation by federal agency representative(s) or person(s) affiliated with industry is not to be interpreted as government or industry endorsement of this code or standard.

Date of Issuance: August 31, 1981

No part of this document may be reproduced in any form,
in an electronic retrieval system or otherwise,
without the prior written permission of the publisher.

Copyright ©1981 by
THE AMERICAN SOCIETY OF MECHANICAL ENGINEERS
All Rights Reserved
Printed in U.S.A.

Copyright ASME International
Provided by IHS under license with ASME
No reproduction or networking permitted without license from IHS

Not for Resale

FOREWORD

The scope of the work of PTC Committee No. 19 on Instruments and Apparatus is to describe the various types of instruments and methods of measurement likely to be prescribed in any of the ASME Performance Test Codes. Such details as the limits and sources of error, method of calibration, precautions, etc., as will determine their range of application are given.

Only the methods of measurement and instruments, including instructions for their use, specified in the individual test codes are mandatory. Other methods of measurement and instruments, that may be treated in the Supplements on Instruments and Apparatus, shall not be used unless agreeable to all the parties to the test.

This Supplement on Instruments and Apparatus, Part 10 on Flue and Exhaust Gas Analyses, replaces an older one published in 1968.

This Edition was approved by the Supervisory Committee on May 15, 1978. It was approved and adopted by the American National Standards Institute as meeting the criteria for an American National Standard on August 17, 1978. Following rescission of a critical manual technique by the original source (ASTM) the document was re-approved by the Supervisory Committee with an alternate manual technique on December 29, 1980 and re-adopted by the American National Standards Institute on June 18, 1981.

Copyright ASME International
Provided by IHS under license with ASME
No reproduction or networking permitted without license from IHS
Not for Resale

PERSONNEL OF PERFORMANCE TEST CODE COMMITTEE NO. 19.10 ON INSTRUMENTS AND APPARATUS FLUE AND EXHAUST GAS ANALYSES

Daniel E. Carl, *Chairman*
R. W. Robinson, *Vice-Chairman*
H. W. Blakeslee, *Secretary*

H. W. Blakeslee, Environmental Engineer, Pipe & Plastics Group, Certain Teed Corporation, Box 1100, Blue Bell, Pennsylvania 19422

D. E. Carl, P. E., Senior Engineer, Combustion Turbine Systems Division, Westinghouse Electric Corporation, C220, P. O. Box 251, Concordville, Pennsylvania 19331

G. R. Holmes, Results Engineer, Fort Martin Station, Monogahela Power, P. O. Box 156, Maidsville, West Virginia 26541

John Nader, (Advisory Member), Retired, Consultant-Air Quality Measurement, 2336 New Bern Avenue, Raleigh, North Carolina 27610

R. W. Robinson, Manager, Field Testing and Performance Results, Combustion Engineering Company, 1000 Prospect Hill Road, Windsor, Connecticut 06095

C. J. Stillwagon, Results Engineer, Babcock & Wilcox Company, 20 S. Van Buren Avenue, Barberton, Ohio 44203 (July, 1974 - February, 1976)

D. Woollatt, Manager, Research Lab., Worthington, CEI, Incorporated, P. O. Box 69, Buffalo, New York 14240 (July, 1974 - August, 1976)

Copyright ASME International
Provided by IHS under license with ASME
No reproduction or networking permitted without license from IHS
Not for Resale

Personnel of the Performance Test Codes Supervisory Committee

J. H. Fernandes, *Chairman*
C. B. Scharp, *Vice Chairman*

D. W. Anacki
R. P. Benedict
K. C. Cotton
W. A. Crandall
R. C. Dannettel
J. S. Davis
V. F. Estcourt
W. L. Garvin
A. S. Grimes
K. G. Grothues
R. Jorgensen
E. L. Knoedler
W. C. Krutzsch
C. A. Larson
A. Lechner
P. Leung
S. W. Lovejoy
W. G. McLean
J. W. Murdock
L. C. Neale
R. J. Peyton
W. A. Pollock
J. F. Sebald
J. C. Westcott

Copyright ASME International
Provided by IHS under license with ASME
No reproduction or networking permitted without license from IHS
Not for Resale

ASME PERFORMANCE TEST CODES

Supplement on Instruments and Apparatus Part 10 Flue and Exhaust Gas Analyses

CONTENTS

Section		Pars.
1	INTRODUCTION	1.01-1.04
2	GENERAL	2.01-2.03.4
	Conventional Combustion	2.01.1-2.01.1.7
	Other Combustion	2.01.2-2.01.2.3
	Purpose of Test	2.02-2.02.2
	Measurement Systems	2.03-2.03.4
3	EXTRACTIVE MEASUREMENT SYSTEMS	3.01-3.03.4.5.3
	Sampling Considerations	3.02-3.02.5.8
	Test Requirements	3.02.1-3.02.1.2
	Instrumental or Manual	3.02.2-3.02.2.1
	Test Plan	3.02.3-3.02.3.5
	Sample Location	3.02.4-3.02.4.9
	Preliminary Testing	3.02.5-3.02.5.8
	Extractive Systems	3.03-3.03.4.5.3
	Introduction	3.03.1-3.03.1.7
	Probe (Extraction)	3.03.2-3.03.2.9
	Sample Transport	3.03.3-3.03.3.2.4
	Pumps	3.03.3.1-3.03.3.1.4
	Sample Line	3.03.3.2-3.03.3.2.5
	Sample Conditioning	3.03.4-3.03.4.5.3
	Particulate Removal	3.03.4.2-3.03.4.2.7
	Temperature Control	3.03.4.3-3.03.4.3.3
	Moisture Control	3.03.4.4-3.03.4.4.6
	Interference Gas Control	3.03.4.5-3.03.4.5.3
4	SPECIFIC GAS ANALYSIS FOR EXTRACTIVE SYSTEMS	4.01-4.09.2
	Oxygen	4.02-4.02.3
	Carbon Dioxide	4.03-4.03.3
	Carbon Monoxide	4.04-4.04.3
	Nitrogen	4.05-4.05.1
	Sulfur Oxides	4.06-4.06.3
	Nitrogen Oxides	4.07-4.07.3
	Hydrogen Sulfide	4.08-4.08.3
	Total Hydrocarbons	4.09-4.09.2
5	IN-SITU AND REMOTE SYSTEMS	5.01-5.02.1
	In-Situ Systems	5.01-5.01.5
	Remote Systems	5.02-5.02.1
6	APPENDIX	6.01-6.06.8
	Manual Methods of Analysis	6.01-6.01.6
	Manually Operated Orsat	6.01.1-6.01.1.4
	ASTM Test D 1608 (Phenol-Disulfonic Acid)	6.01.2
	Griess-Saltzman Reaction	6.01.3
	Federal EPA Method 6 (Determination of Sulfur Dioxide Emissions from Stationary Sources)	6.01.4
	Brookhaven Controlled Condensation System for the Measurement of Combustion Flue Gas Pollutants	6.01.5
	Hydrogen Sulfide in Air	6.01.6
	Instrumental Methods of Analysis	6.02-6.02.11.2
	Paramagnetic Attraction Oxygen Analyzer	6.02.1-6.02.1.2
	Zirconia Diffusion Cell	6.02.2
	Electrochemical Membrane Diffusion	6.02.3-6.02.3.3
	Catalytic Combustion	6.02.4-6.02.4.2
	Non-Dispersive Infrared Spectroscopy (NDIR)	6.02.5-6.02.5.3
	Flame Ionization Detection	6.02.6-6.02.6.3
	Chemiluminescence	6.02.7-6.02.7.2
	Visible Photometry and Non-Dispersive Ultraviolet Photometry	6.02.8-6.02.8.3
	Electrolytic Titration	6.02.9-6.02.9.2
	Pulsed Ultraviolet Fluorescence	6.02.10-6.02.10.2
	Flame Photometry	6.02.11-6.02.11.2
	Calculations	6.03-6.03.10.6
	Symbols and Description	6.03.1
	Metric Conversion Factors	6.03.2
	Introduction	6.03.3-6.03.3.2
	Moisture Determination	6.03.4-6.03.4.6
	Weight of Gases	6.03.5-6.03.5.3
	Air Determination	6.03.6-6.03.6.5.2
	Conversion of ppm to Different Percent O_2 Basis	6.03.7
	Conversion of ppm to lbm/10^6 Btu	6.03.8-6.03.8.4
	Derivation of Various Equations	6.04-6.04.2
	Excess Air Equation	6.04.1-6.04.1.11
	Weight of Dry Air	6.04.2
	Statistical Interpretation of Data-Sampling Requirements	6.05-6.05.7.3
	Design of Multi-Holed Sample Probe	6.06-6.06.8

Copyright ASME International
Provided by IHS under license with ASME
No reproduction or networking permitted without license from IHS
Not for Resale

SECTION 1, INTRODUCTION

1.01 Presented are descriptions of methods, apparatus, and calculations which are used in conjunction with Performance Test Codes to determine quantitatively, the gaseous constituents of exhausts resulting from stationary combustion sources. The gases covered by this PTC Supplement are oxygen, carbon dioxide, carbon monoxide, nitrogen, sulfur dioxide, sulfur trioxide, nitric oxide, nitrogen dioxide, hydrogen sulfide, and hydrocarbons. Stationary combustion sources include steam generators, gas turbines, internal combustion engines, incinerators, etc.

1.02 Many methods are available for measuring the constituents in flue and exhaust gases. This PTC Supplement describes in detail the most commonly used instrumentation and analytical procedures used for flue and exhaust gas analyses. Included are instrumental methods as well as manual (normally, wet chemical) methods. The instrumental methods include instruments used for non-continuous or continuous sampling using extractive samples and in-situ type instruments that require no sampling system. The variety of sources and purposes for testing preclude the selection of any one technique as being universally suitable for measuring a given species. The intent of this PTC Supplement is to allow the persons applying a Performance Test Code a choice in selecting the instrumentation or analytical procedures most applicable to their situation. This supplement is not intended as a guide in the performance of compliance tests for federal, state or local government emission standards but will prove useful in establishing measurement systems when government standards permit a choice.

1.03 The text contains general information on combustion, exhaust gases, sampling systems, measurement systems, and calculations commonly used for exhaust gas testing. Section 4 lists specific methods of extractive gas analysis for each species covered by the PTC Supplement while the methods are described in detail in Appendix I. Sampling requirements, sampling conditioning, calibration methods, special precautions, etc., are included for each species. Sufficient information is included to enable engineering personnel to plan exhaust tests, select equipment, perform the exhaust gas tests, and make the required calculations.

1.04 This Supplement is not a comprehensive survey of techniques available but is instead a systematic approach allowing the analysis system to be best designed. Instrumental methods are continually improving so that any document referring to specific instruments will suffer relatively rapid obsolescence. Reference should be made to continuously updated documents such as Instrumentation for Environmental Monitoring (Lawrence Berkley Laboratories) for correct information on specific instruments.

Copyright ASME International
Provided by IHS under license with ASME
No reproduction or networking permitted without license from IHS
Not for Resale

SECTION 2, GENERAL

2.01 Combustion

2.01.1 Conventional Combustion

2.01.1.1 Conventional combustion systems use fossil fuel in the solid, liquid, or gaseous form. Air is utilized as the source of oxygen for the oxidation of the combustible constituents in the fuel. For most sources the major combustible constituents are elemental carbon and compounds of hydrogen and carbon. In the ideal combustion process, these are oxidized to form carbon dioxide and water vapor. Small quantities of sulfur present in fossil fuels are also combustible and contribute slightly to the heating value of the fuel.

2.01.1.2 Theoretical air is the quantity of air necessary to supply enough oxygen to convert all the carbon, hydrogen, and sulfur in a fuel to carbon dioxide, water and sulfur dioxide. Complete combustion of fuel with no air in excess of the amount theoretically required is an ideal condition. Excess air over the theoretical air is required for satisfactory combustion of the fuel in a reasonable space and time. By the analysis of the exhaust gases, one can determine how well the combustion approaches theoretical stoichiometric conditions.

2.01.1.3 The major gaseous constituents of flue and exhaust streams from normal combustion systems are carbon dioxide, oxygen, nitrogen, and water vapor. In excess air calculations, some or all of these gases must be determined with an accuracy not exceeding ±2 percent by volume. Equations for determining the excess air, molecular weight, and weight of dry flue gases per pound of fuel are included in Appendix 3.

2.01.1.4 Figure 15 in the Appendix (Par. 6.03.6.4) shows the relationship between oxygen, carbon dioxide, carbon monoxide, nitrogen, and excess air for various fuels of known composition. The oxygen analyzer is an important instrument for combustion control and test purposes because the relationship between oxygen in the flue gases and excess air can be determined from the fuel analysis.

2.01.1.5 The exhaust gases of the combustion process are a major source of heat loss. The sensible heat loss (see PTC 4.1) in the exhaust gases can be determined with acceptable accuracy from a careful measurement of the exhaust gases and their temperatures. It is essential to measure the temperature of these gases to determine the efficiency of the unit.

2.01.1.6 The most important of the trace species found in exhaust gases from normal combustion processes are carbon monoxide, hydrocarbons, nitric oxide, nitrogen dioxide, sulfur dioxide, sulfur trioxide and hydrogen sulfide. When found in exhaust gases, these normally have relatively low concentrations compared to the major gaseous constituents. Instruments used to measure these low concentrations must be accurate in the parts per million range.

2.01.1.7 A complete fuel analysis is required for emission tests. The water vapor, sulfur dioxide, and other components in the exhaust gases can then be calculated for systems without exhaust gas scrubbers. Sulfur trioxide can be estimated based on experience. The moisture in the exhaust gas is the sum of the free moisture in the fuel moisture from burning hydrogen in the fuel and moisture in the combustion air. Approximately 98 percent of the sulfur is converted to SO_2 and 2 percent to SO_3 in the low excess air combustion processes of boiler plants. The analysis may vary widely in other plants. The fuel analysis is often helpful in estimating other component gases.

2.01.2 Other Combustion

2.01.2.1 Some combustion systems do not use fossil fuel. Others do not use air as the source of oxygen for the oxidation. These include units that burn blast furnace gas, coke oven gas, and waste products from the oil refinery industry as well as refuse incinerators and heat recovery boilers that burn domestic or industrial refuse such as sawdust, bark, black liquor, and cane sugar. Other systems use oxygen or exhaust gases that are high in oxygen for the source of oxygen for the combustion process.

2.01.2.2 The normal relationship between excess air, oxygen, and carbon dioxide varies for these special combustion systems. Equations other than those in the Appendix, relating oxygen to excess air must be developed for these special combustion systems.

2.01.2.3 Special combustion systems often include the same trace species found in normal combustion exhaust as well as species formed by the oxidation of other products in the fuel. For example, a wide variety of gaseous species are found in the exhaust from refuse incinerators that burn domestic and industrial refuse that are not found when firing fossil fuel. A complete fuel analysis should be used to determine the possible types of gases and to estimate their concentration. This PTC Supplement only

Copyright ASME International
Provided by IHS under license with ASME
No reproduction or networking permitted without license from IHS
Not for Resale

covers methods of determining the pollutants that are found in stationary combustion sources burning fossil fuel. Other gases that may be present in the exhaust from special combustion systems may interfere with some of the test methods covered by this text. The instrument manufacturer and the designer of the combustion systems should be consulted in these cases for possible interferences and proper calibration procedures to be used to determine the extent of the interferences.

2.02 Purpose of Test

2.02.1 There are many purposes for making exhaust gas analyses. Table 1 lists some of the purposes for making flue gas tests on a steam generator. For example, O_2 analysis is commonly used to monitor and control combustion processes to obtain safe and efficient operation.

2.02.2 The trace constituents are measured to determine compliance with federal, state, and local regulations and for the monitoring and control of pollution abatement equipment. When compliance with government standards is the purpose of the tests, the testing guidelines published by the federal, state, or local authority must be followed unless a variance can be obtained.

2.03 Measurement Systems

2.03.1 Within the last few years the frequency of exhaust gas analyses has increased in most industries to control various exhaust constituents and unit efficiency. Many manufacturers supply gas analysis equipment using various techniques. The techniques can be grouped into three general areas; i.e., extractive, in-situ, and remote.

2 03.2 The extractive approach has been the most utilized for systems measuring gaseous constituents from stationary sources. This approach requires a sample probe, transport line, conditioning system, and analyzers. There are potential problems in the sampling aspects as well as the measurement.

2.03.3 The spectrometric in-situ approach requires no sample conditioning. The concentrations are determined by the effects on a light (or other energy) source as it passes through the exhaust before impingement on a sensor. The source and sensor are both mounted directly on the stack. They can either be across the stack from each other or colocated on one side with a reflector on the other side of the stack. Although there are no requirements for

TABLE 1

Flue Gas Tests for Steam Generators

Purpose of Test	Constituents	Probe Location
1. Air Infiltration	O_2 or CO_2	Furnace and Boiler Outlet
2. Gas Stratification	O_2 or CO_2	Furnace, Boiler Outlet, Duct, Stack
3. Air Heater Leakage	O_2 or CO_2	Gas Entering and Leaving Air Heater
4. Unit Efficiency	O_2, CO_2, CO, or HC	Gas at Outlet of Unit (See PTC 4.1)
5. Excess Air	O_2 or CO_2	Economizer or Air Heater Outlet
6. Pollution Determination	SO_2, SO_3, NO, NO_2, CO, HC, H_2S	Stack or Exhaust Duct
7. Tube Wastage Caused from Reducing Atmosphere	CO, H_2S, O_2	In Furnace at Wastage Area
8. Scrubber Performance	SO_2	Inlet and Outlet of Scrubber
9. Odor Control	H_2S	Outlet of Unit
10. Cold End Corrosion (Acid Dew Point)	SO_3	Air Heater Inlet and Outlet

Copyright ASME International
Provided by IHS under license with ASME
No reproduction or networking permitted without license from IHS
Not for Resale

sample conditioning with in-stack systems, moisture and particulate in the exhaust can possibly cause interference.

2.03.4 Remote sensing has been developed to enable pollution monitoring from satellite and to allow measurements of concentration at a distance from the source. This method will require more evaluations in various applications before it can be demonstrated as a viable technique that competes with either the extractive or the in-situ methods.

Copyright ASME International
Provided by IHS under license with ASME
No reproduction or networking permitted without license from IHS

Not for Resale

SECTION 3, EXTRACTIVE MEASUREMENT SYSTEMS

3.01 There are several considerations that must be made in preparation for an extractive measurement test. They should all be considered or the test may be either under or over designed. These are:

- Purpose of the testing; including the required accuracy.
- The analytical technique to be used.
- Test plan to insure that the data collected fulfills the test requirements.
- The probe design and arrangement.
- The sample transport line and sample conditioning system.

3.02 Sampling Considerations

3.02.1 Test Requirements

3.02.1.1 Before a test can be started, the requirements of the test must be firmly established and suitable equipment chosen. In particular, the accuracy required must be determined and the type of test specified; e.g., whether equipment that will monitor emissions over a period of years is required, whether the test is part of a performance test on the combustion equipment, or whether the test is to prove compliance with regulations.

3.02.1.2 The instrumented or manual analytical method should be chosen to span the entire range of expected gas concentrations. The highest possible concentration should not exceed the range of the method; ideally, the average concentrations should lie at 75 percent of the range. Several calibration points on the analytical system must be made to span the entire range of expected concentrations, as the minimum requirement.

3.02.2 Instrumental or Manual

3.02.2.1 The first choice to be made in an extractive system is between manual (normally wet chemical) and instrument methods. If monitoring over an extended period is specified, then an instrument technique is usually required, and in some compliance testing, manual methods are specified. In most other cases, either method can be used and the choice must be made on the basis of accuracy, convenience, and practicality. In general, instrument methods will be more convenient when many readings are required. Instrumental methods are more expensive and require relatively complicated sample conditioning and calibrating systems. Manual methods often require only simple apparatus and are inexpensive, but may entail a considerable delay in obtaining results. Manual methods also require careful work by an experienced technician if accurate results are to be obtained. Section 4 on the specific gas analysis should be referenced for selection of a suitable analytical technique.

3.02.3 Test Plan

3.02.3.1 Before the test is started, a detailed test plan should be prepared. This should include shakedown of the instrumentation and sampling system, the calibration procedures and frequency, the number of test runs to be made at each nominally identical condition, and the calculation procedures to be used to convert the raw readings to useful form. The test plan will be influenced by the purpose of the test, the accuracy required, the stability of the combustion process, the exhaust conditions, and the analysis method used.

3.02.3.2 Attention must be given to the method to be used for extracting the sample from the exhaust stream. Since only a very small part of the total flow will be analyzed, it is essential that the gas analyzed is representative of the average exhaust gas. Factors which will influence the accuracy (i.e., the validity) of the sampling system are the design of the sampling probe and the uniformity of the gas composition, velocity and temperature over the duct cross section at the sampling point.

3.02.3.3 Unless prior experience indicates that there is no stratification at the sampling position, it will be necessary to do preliminary testing to measure the velocity, temperature and composition profiles across the sample plane. A sampling procedure can then be selected to give the required accuracy. If the stack has significant stratification that would cause large errors with single point sampling, it may be necessary to traverse the stack and take samples at many points. In some cases, it is possible to design a multi-hole probe that will give acceptable accuracy (see Par. 6.06). If there is little stratification, a single reading from a single-hole probe may be adequate.

3.02.3.4 The stability of the stack conditions with time must be considered before choosing the analysis method and equipment. If conditions vary appreciably, it may be necessary to average results over a period of time. Such averaging will be much easier with instrument systems than with wet chemical methods.

Copyright ASME International
Provided by IHS under license with ASME
No reproduction or networking permitted without license from IHS
Not for Resale

3.02.3.5 Care must be taken that variations in velocity, temperature, or composition are not caused by changes in the operating conditions occurring while the traverse is being made. A recognized characteristic of the process such as fuel flow or the air flow to fan speed ratio should be monitored during the traverse to verify stable operation. If there is any chance of conditions in the stack changing with time, the readings should be repeated until consistent results are obtained. It may be preferable to use multi-point probes rather than traversing. Otherwise, if conditions continue to change with time, consistent results (i.e., one value) will not be obtained, but an operating range must be established.

3.02.4 Sample Location

3.02.4.1 In many cases, the exhaust ducting system is long, and careful consideration must be given to selecting the sample location. The following should be considered in making this selection:

3.02.4.2 In some cases, the location of the measurement point is determined by the purpose of the test, e.g., measurement of exhaust emissions must be taken after any emission control device while combustion efficiency tests require a location closer to the point of combustion. The concentrations of several gases will vary as the exhaust passes through "scrubbers," and will need to be considered when designing installations for continuous monitoring.

3.02.4.3 The composition of the gas may change with distance along the exhaust system, e.g., NO in the presence of oxygen will change to NO_2 and any heavy hydrocarbons may condense out of the gas stream.

3.02.4.4 If the exhaust stream is cooled sufficiently for water to condense, some components, e.g., NO_2, and SO_2 will be dissolved out of the gas stream into the water.

3.02.4.5 Unless two or more streams are combined, the stratification of gas will be reduced as it passes through the exhaust system, thus allowing a more simple sampling system to be used.

3.02.4.6 Measurements should not be taken within three diameters of the stack exit to avoid the possibility of any ambient air being aspirated into the exhaust and becoming included in the sample. Oxygen readings across the duct should verify that the air is not being drawn in.

3.02.4.7 For continuous systems, the apparatus should be located so that it can be readily inspected and maintained.

3.02.4.8 The analysis should be made in a run of straight uniform ducting so that the velocity profile is as uniform as possible. This reduces the difficulty of obtaining a representative sample.

3.02.4.9 The velocity will be acceptably uniform if the sampling plane is at least eight diameters downstream and two diameters upstream of the nearest disturbance (bend, etc.).

3.02.5 Preliminary Test to Determine Number of Sampling Points

3.02.5.1 When there is no prior knowledge of the homogeneity of the gas concentrations across the sample plane, a preliminary test is necessary to determine the number of sampling positions.

3.02.5.2 It is first necessary to divide the duct cross section into small areas such that the conditions may be assumed to be uniform across each small area. The only requirements in subdividing rectangular ducts are that each of the areas be equal and the proper size, approximately square in shape, and that the sample be extracted at the centroid of each area, as shown in Fig. 1. Sample points in circular ducts are located along diameters normal to each other according to the equation given in Fig. 2.

3.02.5.3 The number of sampling points required in a given duct, may be estimated from Fig. 3. For rectangular ducts, the equivalent diameter is used.

$$\text{Equivalent Diameter} = 2\left(\frac{\text{length} \times \text{width}}{\text{length} + \text{width}}\right)$$

Traverse Positions in Rectangular Ducts

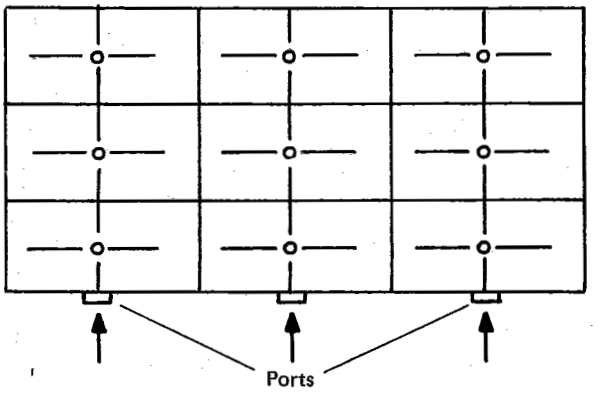

FIG. 1

Copyright ASME International
Provided by IHS under license with ASME
No reproduction or networking permitted without license from IHS
Not for Resale

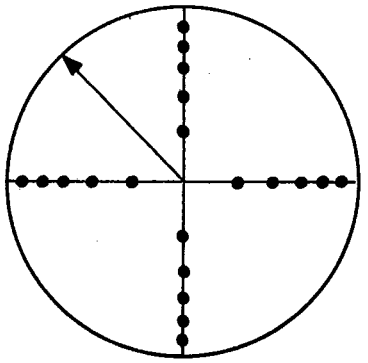

Cross Section of
Circular Gas Passage

NOTE: indicates location of sample point

$$r_n = R\sqrt{\frac{2N_a - 1}{N_T}}$$

r_n = distance from sampling point to center of pipe
R = radius of pipe
N_a = no. of sampling points counted from center as zero
N_T = total no. of sampling points on A diameter

FIG. 2 METHOD OF SUBDIVIDING CIRCULAR SAMPLE PLANE

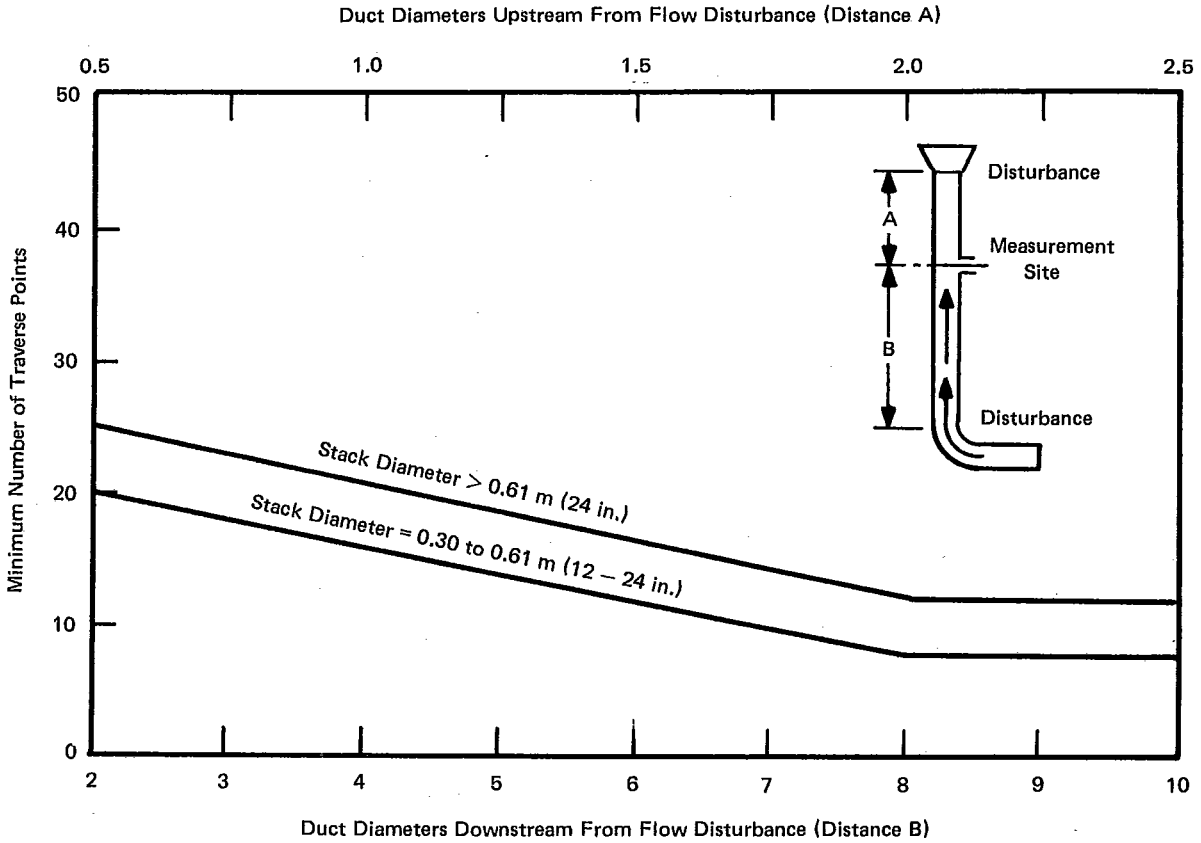

FIG. 3 DUCT DIAMETERS UPSTREAM FROM FLOW-DISTURBANCE (DISTANCE A)

Copyright ASME International
Provided by IHS under license with ASME
No reproduction or networking permitted without license from IHS
Not for Resale

3.02.5.4 Figure 3 will often lead to a conservatively high number of sampling points. This method is the most accurate approach to sampling situations where non-homogeneous flow is possible. A typical test would measure the gas velocity, temperature, and composition at each of the sampling locations given by Figs. 2 and 3. Typical instrumentation for velocity and temperature measurement would be a pitot tube and thermocouple. If there is potential for reverse flow in the duct, a three dimensional probe must be used to determine the net mass flux. If significant gradients are suspected (such as due to a large boundary layer) the suspect areas of the cross section should be further sub-divided. If at all possible, these areas should be avoided.

3.02.5.5 To measure stratification, it is only necessary to measure a single gas component, and this is best done with a continuous instrument. An oxygen or carbon dioxide analyzer would be a good choice, depending on the excess air of the exhaust – the one in higher concentration is used.

3.02.5.6 Once the stratification is known, the minimum number of sampling points required to achieve a desired precision can be calculated. If the preliminary test indicates that the maximum and minimum concentrations obtained were within the required precision, a single point is adequate. If the maximum/minimum concentration variation exceeds the required precision, the mass flow through each small area as determined by the temperature and velocity measurements must be used to calculate the number of points required as outlined in the Appendix (Par. 6.05).

3.02.5.7 The sample analyzed by the instrument should have the same composition as the mass flow average across the sample plane. That is, if the concentration of the constituent in the sample is multiplied by the total exhaust mass flow rate, the result will be total mass flow rate of the constituent.

3.02.5.8 The accuracy given by using a single probe or other sampling system can be calculated from the above information.

3.03 Extractive Systems

3.03.1 Introduction

3.03.1.1 An extractive sampling system is one that removes a portion of the gas inside a flue and delivers it to a chemical or instrumental analyzer. The extractive system must perform three basic functions:

3.03.1.2 (1) *Extraction* – A portion of the flue gas that is representative of the sampling plane, must be extracted using a probe or configuration of several probes inserted into the gas stream, as described in par. 3.02.5.

3.03.1.3 (2) *Transport* – The gas sample is normally drawn through the probe by a source of vacuum and led to the analytical device without chemically altering the species of interest.

3.03.1.4 (3) *Conditioning* – All components in the exhaust gas sample must be removed which might interfere with the analysis of the species of interest. The state (temperature, pressure, humidity) of the sample must also be suitable for each analytical technique.

3.03.1.5 From the basic hand-held Orsat analyzer to the permanent continuous multi-component stack gas monitors, every extractive system performs these three functions. The degree to which each function is performed is dependent upon the method of analysis and the sensitivity required. The Orsat, for example, is commonly used to measure percentage concentrations of CO, CO_2, and O_2. It uses chemical absorption as a method of analysis. Since it is used near the stack and the reactivities of these gases are low, almost any type of sample line tubing which is free of leaks can be used without interfering with the accuracy. Stack particulate matter is often removed by a cotton or glass wool plug in the sample line, and the probe is normally an unheated stainless or carbon steel tube.

3.03.1.6 Each extractive system must be designed to meet the requirements of both the analytical method used and the specific source tested. Two broad categories are whether the system is to be continuous or intermittent, and whether the analytical method is to be wet chemical or instrumental. Each of these factors requires different hardware to carry out the functions of sample extraction, transport, and conditioning.

3.03.1.7 Calibration is a fourth function of the extractive system which is not necessary for its operation, but determines if the other three functions are satisfactory. The system must be capable of being calibrated through the probe with known concentrations of the gaseous species of interest combined with concentrations of interference gases present in the flue for which the system was designed. The calibrations should include passing the gas through any in-stack filters when they are present. This should include all reactive combinations of gases which might be present in the stack. For example, if SO_2 is being measured, calibration should include SO_2, O_2 and water to determine the amount of SO_2 removed by the sampling system. Such a test need not be performed more than once

Copyright ASME International
Provided by IHS under license with ASME
No reproduction or networking permitted without license from IHS
Not for Resale

on a system if indeed at all, but the system designer must be aware that the data accuracy cannot be assured unless this ultimate test is performed. Routine calibration must be accomplished in the analytical device itself by calibration gases, optical filters, or known solutions. However, where reactive gases are measured, where high sensitivities are required, or where severe stack conditions exist, periodic through-the-probe calibrations are mandatory to insure valid measurements.

3.03.2 Probe

3.03.2.1 The selection of a suitable probe design requires considering three factors: 1) the chemical and physical properties of the gases to be tested, 2) the homogeneity across the sampling plane and 3) flue conditions at the sampling plane.

3.03.2.2 The probe must be capable of withstanding the physical and corrosive environment of the sample plane. In most cases, this requires that it be fabricated from metal. Where the sample gas may react on the metal surface, glass or ceramic liners are required, but the prime concern is strength.

3.03.2.3 Table 2 shows the minimum reactive material required for sampling each species. Where several species are being measured with the same probe the gas with the most severe requirements dictates the probe material.

3.03.2.4 The internal diameter of the probe should be designed to maintain a high (i.e., turbulent, with a Reynolds number greater than 2300) sample transport velocity throughout. This size should be the same or slightly smaller than the sample line. There should be no dead volumes such as might be created through the use of oversized pipe fittings. If the configuration requires several probes brought together in a manifold, the probes should be proportionally sized or fitted with valves to maintain proper velocity in each.

3.03.2.5 The design of the probe itself is determined by standard engineering practices. Often, it can be as simple as a clear carbon steel or stainless steel pipe. If

TABLE 2

Minimum Reactive Probe Materials to Avoid Sample Reaction

Gas	Temperature At Sample Plane		
	Ambient–750°F	750-1050°F	1050°F and Above
Oxygen	Carbon Steel	Stainless Steel*	Cooled Stainless* below 1200°F
CO	Carbon Steel	Cooled Stainless Steel* 350-900°F	Cooled Stainless* below 900°F
CO_2	Carbon Steel	Stainless Steel* 350-1050	Cooled Stainless* below 1200°F
NO	Glass or Stainless	Glass or Stainless 350-1050	Quartz or Cooled Stainless below 1200°F
NO_2	Glass or Stainless Maintained at 350°F	Glass or Stainless at 350°F	Quartz or Cooled Stainless at 350°F
SO_2	Glass or Stainless Maintained above 350°F	Glass or Cooled Stainless 350-750°F	Quartz or Cooled Stainless 350-750°F
SO_3	Glass or Stainless Maintained above 350°F	Glass or Stainless 350-750°F	Quartz or Cooled Stainless 350-750°F
HC	Carbon Steel Maintained at 375°F	Stainless Steel* Maintained at 375°F	Cooled Stainless Maintained at 375°F
H_2S	Carbon Steel 350-750°F	Stainless Steel* 350-1050°F	Cooled Stainless* 350-1200°F

*Maximum chemical resistance shown by 20 Cb stainless, followed by 316 and then 304.

Copyright ASME International
Provided by IHS under license with ASME
No reproduction or networking permitted without license from IHS

Not for Resale

heating is required, a larger carbon steel jacket is often used to protect the electrical windings. Brazed or welded stainless jackets are used where water, glycol, air, or even steam cooling must be provided to the probe. Where glass or quartz heated liners are necessary, a steel jacket must provide support, protection and allow for thermal expansion between the probe and the liner. Figure 4 shows examples of several typical probe designs.

3.03.2.6 Permanent sampling systems, where wide concentration variations exist, require the use of several separate probes. These can be connected to a manifold or they can be run separately to the analytical device for separate analyses. Figure 5 shows an example of a permanent sampling system installed across a duct. Where wide variations in flow exist, it may be necessary to adjust the sampling rate at each sample point to be in proportion with the flow at that point to insure that the concentration in the manifold will be representative of the sample plane. Figure 6 shows an example of a system accomplishing this through the use of calibrated orifices. A preliminary traverse is required to determine the flow at each sample point. The sampling location must be chosen to insure that the flows will be approximately proportional to the initially determined flow. This system includes practical means for routine calibration through the sample line.

3.03.2.7 If a single analysis is to be run on integrated (bag) samples from the sample plane and there are wide

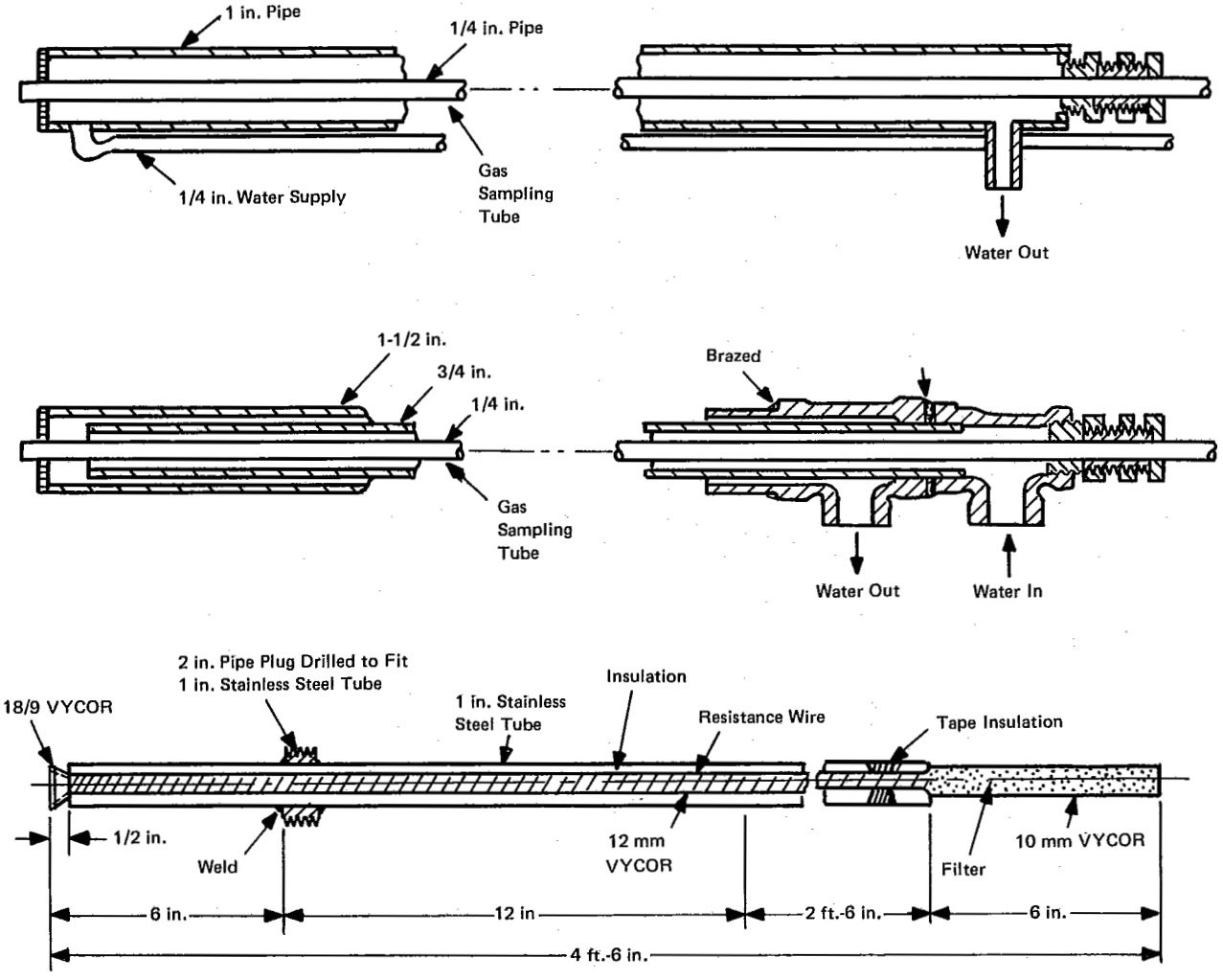

NOTE: Material of construction will depend on exhaust temperature and reactivity of gas species.

FIG. 4 VARIOUS TEMPERATURE CONTROLLED PROBE DESIGNS

Copyright ASME International
Provided by IHS under license with ASME
No reproduction or networking permitted without license from IHS
Not for Resale

variations in mass flow across the sample plane as well as concentration, then it is necessary to sample the centroids of equal areas in proportion to their mass flows. In this case, a pitot tube must be combined with the sample probe and the sample taken at a rate proportional to the mass flow at each point.

3.03.2.8 Integrated bags are used where time average sampling is required or for off-site, high-sensitivity analyses such as gas chromatography. Figure 7 shows a large integrated bag sampler. This design draws the sample into the bag by evacuating the container holding the bag. An advantage of this system is that the sample does not pass through the pump. The recommended material for integrated bags is one which does not react with low concentrations of common hydrocarbons or acid gases.

3.03.2.9 Only gaseous constituents of the exhaust gas are considered in this supplement and it is not necessary to sample isokinetically. That is, the velocity at which gas is drawn into the sample probe need not match the velocity at which gas is flowing in the duct because all the gas species will be sampled without preference due to inertial effects.

3.03.3 Sample Transport

Sample transport is the process of moving the sample from the probe to the analyzer. Sample transport requires a pump or vacuum source and tubing through which to move the sample.

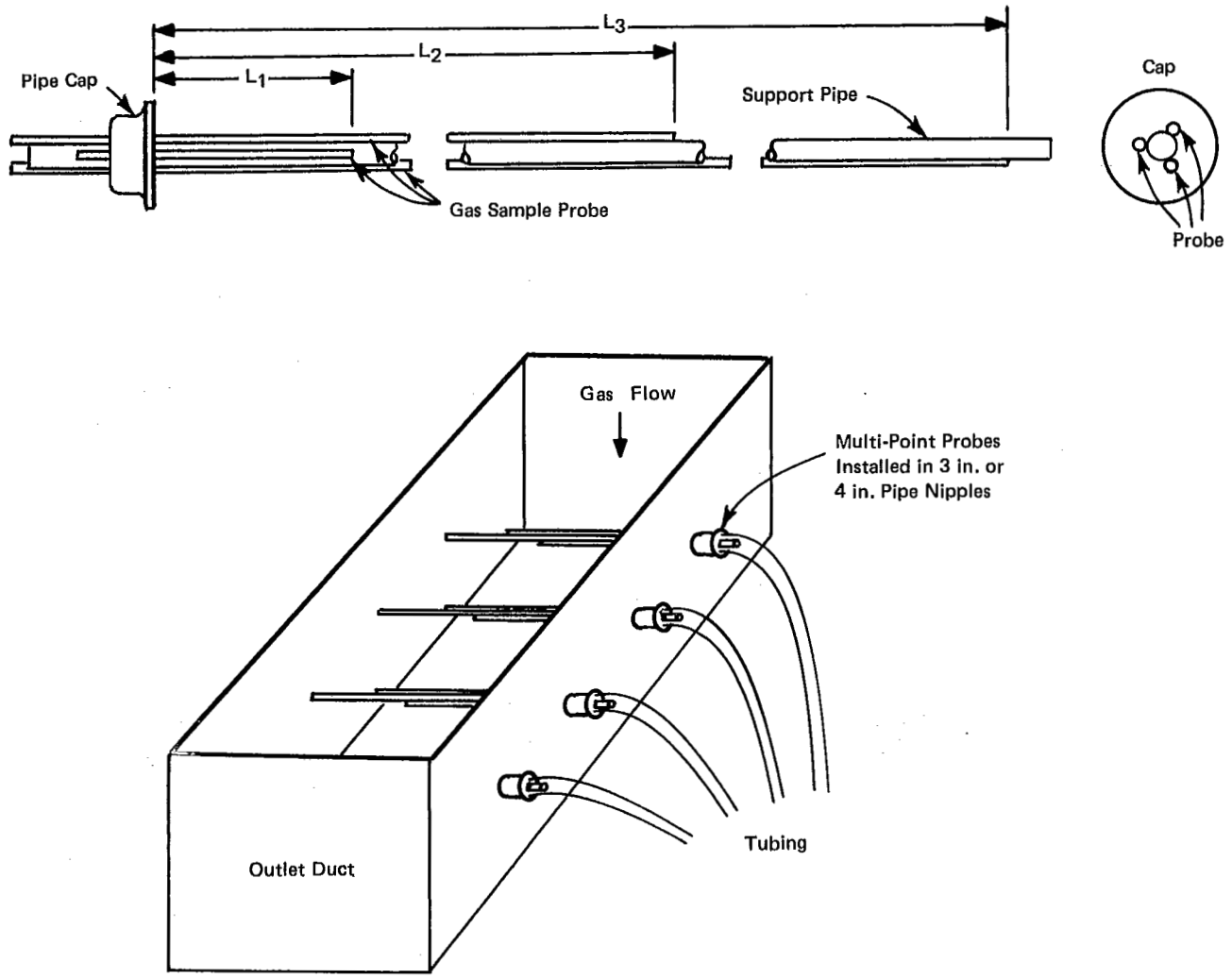

FIG. 5 EXAMPLES OF MULTI-POINT PROBES AND PROBE CONFIGURATIONS.

Copyright ASME International
Provided by IHS under license with ASME
No reproduction or networking permitted without license from IHS
Not for Resale

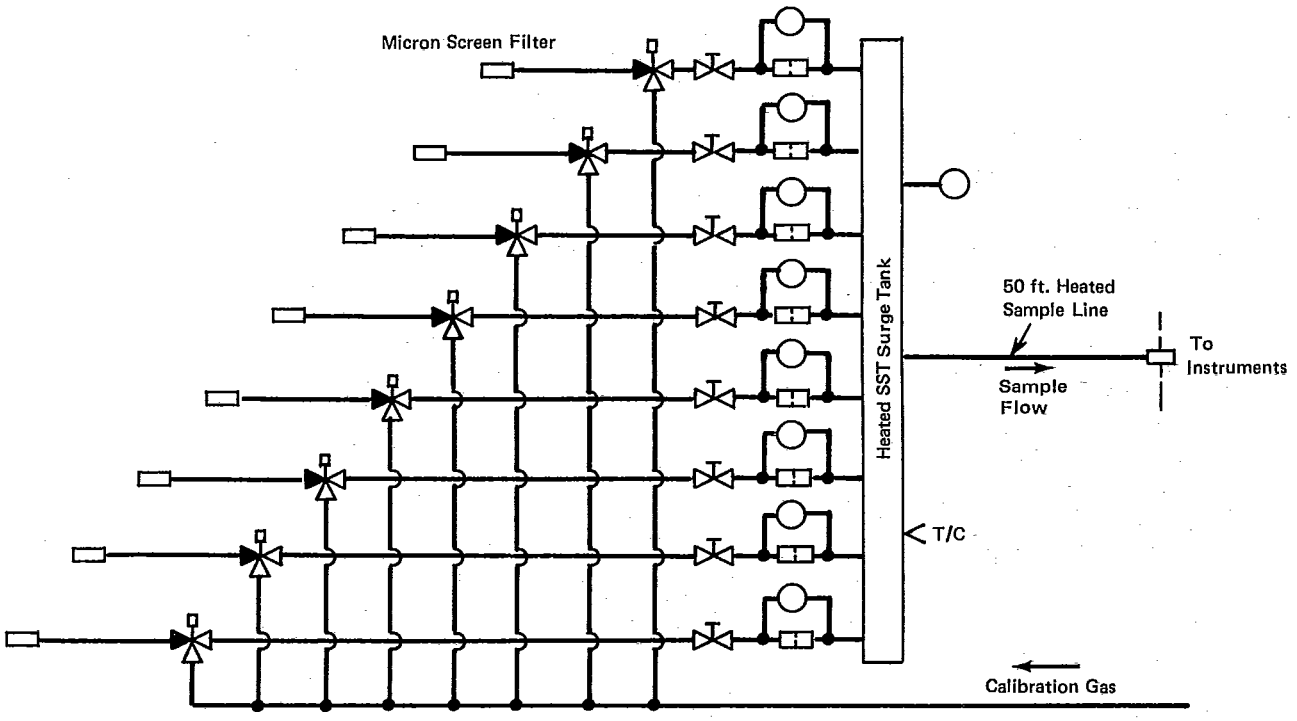

FIG. 6 MULTI-PROBE CONFIGURATION WITH IN-STACK FILTERS, CONTROLLABLE FLOWS, AND CALIBRATION SYSTEM

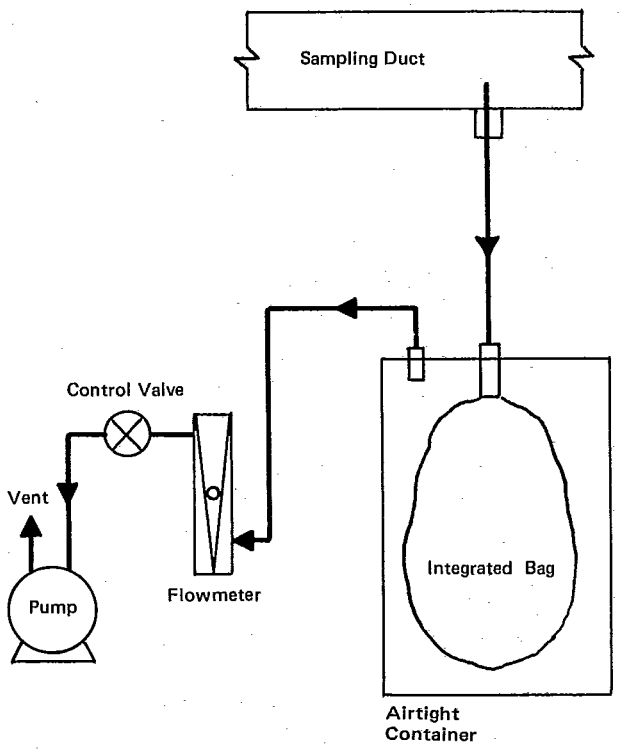

FIG. 7 INTEGRATED GAS SAMPLER

Copyright ASME International
Provided by IHS under license with ASME
No reproduction or networking permitted without license from IHS
Not for Resale

3.03.3.1 Pumps

3.03.3.1.1 Most analytical devices are pressure sensitive. The normal means of allowing for this is to vent the analyzer to atmosphere which requires a pressurized sample stream. Therefore, a pressure-vacuum pump must normally be inserted in the sample line between the probe and the analyzer. Since the gas temperature at the pump will always be less than 400°F and the residence time very short, there is less concern of chemical interactions with the pump materials than with the sample line materials. Certain guidelines must be followed. Oil-lubricated vane or piston pumps should never be used due to the solubility or reactivity of most trace constituents in lubricating oil. Rubber diaphragm pumps are usually adequate except for the measurement of hydrocarbons or the more reactive gases. Teflon diaphragm, stainless bellows and carbon vane pumps are best for all gases. Air and water aspirators are useful for drawing sample through the probe into a manifold outside the stack in locations where electrical power is not easily available or where fire hazards exist. A sample line is then run from the manifold to the analysis area where the electrical pump and instruments are housed. The pump should be located after the mositure and particulate removal devices to increase pump reliability.

3.03.3.1.2 In continuous monitoring systems, it will often be useful to operate the aspirator or pump at a higher capacity than is required for the analytical system. This serves several functions. It produces a short sample transport time between probe and analyzer where long sample lines are required. Also, it helps minimize particulate or moisture drop-out and blockages from occurring in the sample transport system. The excess sample gas is externally vented at the analyzer area. Care must be taken that the vented gas does not interfere with the equipment or pollute the work area.

3.03.3.1.3 The maximum sample transport time between probe and analyzer can be as long as several minutes for non-reactive gases. Very short transport times of 2 seconds have been proposed for sampling reactive gases such as NO. NO reacts slowly with oxygen at ambient temperatures to form NO_2. In heated Teflon sampling lines, the reaction rate is sufficiently slow that with the NO concentrations normally encountered, little oxidation will occur as long as the transport time is less than 10 seconds. Since the equilibrium of this reaction is strongly biased towards NO_2, any dirt in the sample line will act as a catalyst and increase the reaction rate. In all cases it is recommended that the sample transport velocity be maintained high throughout so that the flow is turbulent: i. e., with a Reynolds number greater than 2300.

3.03.3.1.4 Sample flow rates 10 to 100 times that necessary for analysis are common in continuous systems. Preliminary filters and probe and line heaters must be sized accordingly. The valving used to vent the bypass flow must be designed to provide a constant low pressure flow to the analyzers. This must be maintained at all times since most instruments are sensitive to changes in sample pressure. Depending on the instrument, temperature would also be significant but the pumps will normally not influence this. The sample flow rate is not a sensitive parameter for most instruments but should be kept relatively constant. Manufacturer specifications should be followed.

3.03.3.2 Sample Line

3.03.3.2.1 The materials and design of the sample lines are of primary importance in designing a sampling system because of the high surface area to volume ratio of small diameter tubing. For CO, CO_2, and O_2 measurements, aluminum, nylon, polypropylene, or polyethylene tubing is satisfactory. For all other pollutant, either Teflon or 316 stainless steel tubing must be used. Routine cleaning and leak checking of all sample lines is also very important in any permanent installation.

3.03.3.2.2 The sample lines should be constructed with minimum sharp turns, elbows, or unions. Long, straight or slightly curved runs of tubing are desirable where the analyzers are in a remote location. The primary reason is to reduce as far as possible the number of joints which can develop leaks. Small leaks in sample lines which admit air to the sample are very difficult to detect. A thorough leak check must be included during installation of a sampling system and should be repeated routinely at regular intervals. Areas of high vacuum should be avoided throughout the system to minimize air infiltration.

3.03.3.2.3 For gases which do not condense and are not water soluble, sample line heating is not necessary. The line should be physically oriented to prevent condensed moisture from becoming trapped, i.e., it should continuously decline without loops that could collect moisture from the probe to the moisture trap. Where freezing temperatures are likely, the danger of blockage from frozen condensed moisture exists and some form of heating may still be advisable. Insulation alone will not suffice in freezing temperatures.

3.03.3.2.4 Sample lines for CO_2, NO_2, SO_2, SO_3, and H_2S must be heated above the dew point of the exhaust and for SO_3, above the dew point for H_2SO_4. A temperature of 120°C (250°F), is recommended to prevent water condensation. Muller's curve must be referenced (Fig. 8) to determine the line temperature to prevent

Copyright ASME International
Provided by IHS under license with ASME
No reproduction or networking permitted without license from IHS
Not for Resale

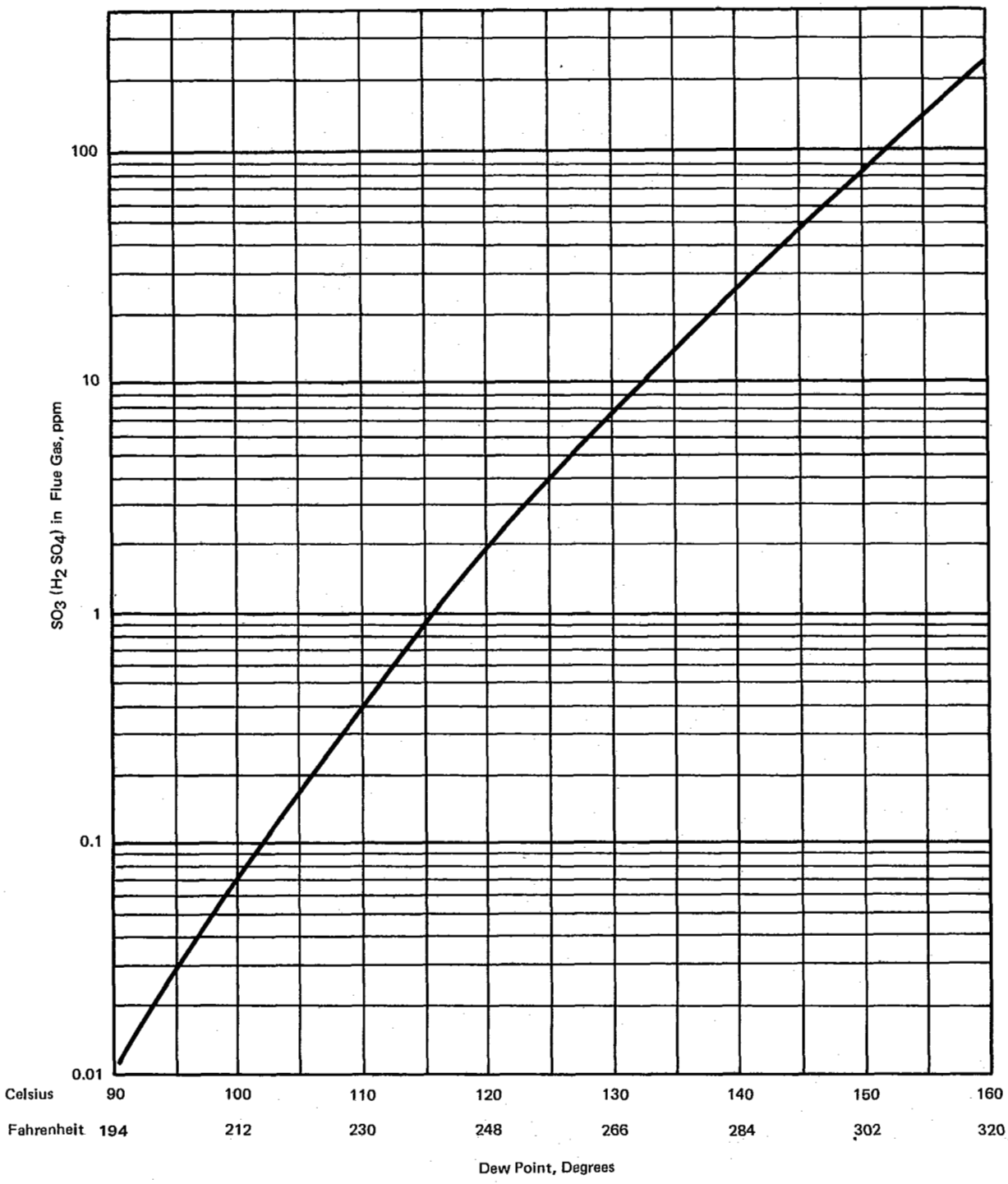

FIG. 8 P. MÜLLER CALCULATED CURVE FOR DEW POINT VS. SULFURIC ACID CONCENTRATION

Copyright ASME International
Provided by IHS under license with ASME
No reproduction or networking permitted without license from IHS
Not for Resale

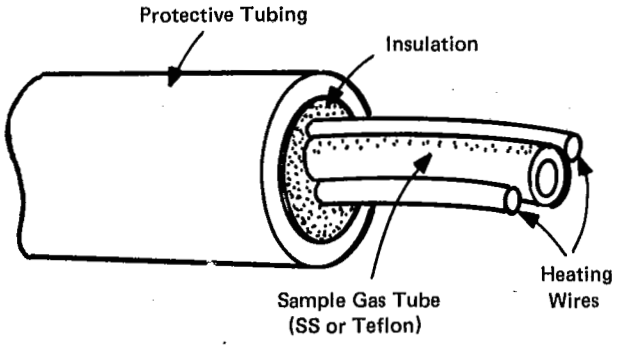

FIG. 9 HEATED TEFLON SAMPLE LINE

H_2SO_4 condensation; generally 150°C (300°F) is adequate. If high molecular weight hydrocarbons are to be analyzed, the line temperature should be 374°F ± 9°F (190°C ± 5°C) in order to prevent oxidation or condensation from occurring. The heating must be continuous and extend from the probe at the stack wall to the inlet of the analytical device. Due to the high ratio of surface area to volume in small diameter tubing and the low heat capacity of gases, rapid cooling will occur if even a short portion of the sample line is unheated. Special attention should be given to valves and fittings since insulation is inadequate to prevent sample cooling.

3.03.3.2.5 Sample line heaters can be either electrical or steam. An example of a heated Teflon sample line is illustrated in Fig. 9.

3.03.4 Sample Conditioning

3.03.4.1 The process of altering the composition and physical state of the flue gas from the sampling plane before delivering it to the analyzers is termed conditioning. It is a vital part of almost every extractive system if only to the extent of particulate removal and cooling. The separate steps of sample conditioning are: particulate removal, moisture control, temperature control, and removal of interferences.

3.03.4.2 Particulate Removal

3.03.4.2.1 As a general rule, particulate matter should be removed from the sample stream for all instrumented procedures and most wet chemical procedures. The Orsat analyzer is not affected by low concentrations of particulate matter, but often a glass wool or cotton plug is placed in the sample line. A quartz wool plug is required in the peroxide method of SO_2 analysis to remove particulates and acid mist. This is advantageous in most other wet chemical methods where substantial fly ash is encountered.

3.03.4.2.2 A filter is mandatory in continuous instrumental analyzers since even low concentrations of particulate will accumulate in sample lines and probes forming reactive surfaces or flow blockages. Particulates will interfere with pump valving and reduce optical or chemical sensitivities of instruments. The recommended procedure is to use two levels of filtration, a coarse, high flow-rate filter at the probe and a fine replaceable filter immediately before the instruments. This system works well in sampling systems with high bypass flow rates and will assure minimum monitoring system interruptions due to particulate matter.

3.03.4.2.3 A stainless steel filter placed inside the flue on the end of the probe (or probes) can be used if the flue temperatures do not exceed 480°C (900°F). A cylinder of several layers of fine wire mesh is one commercial version of this filter. A sintered thimble is another alternative. These filters will prove most useful where the majority of

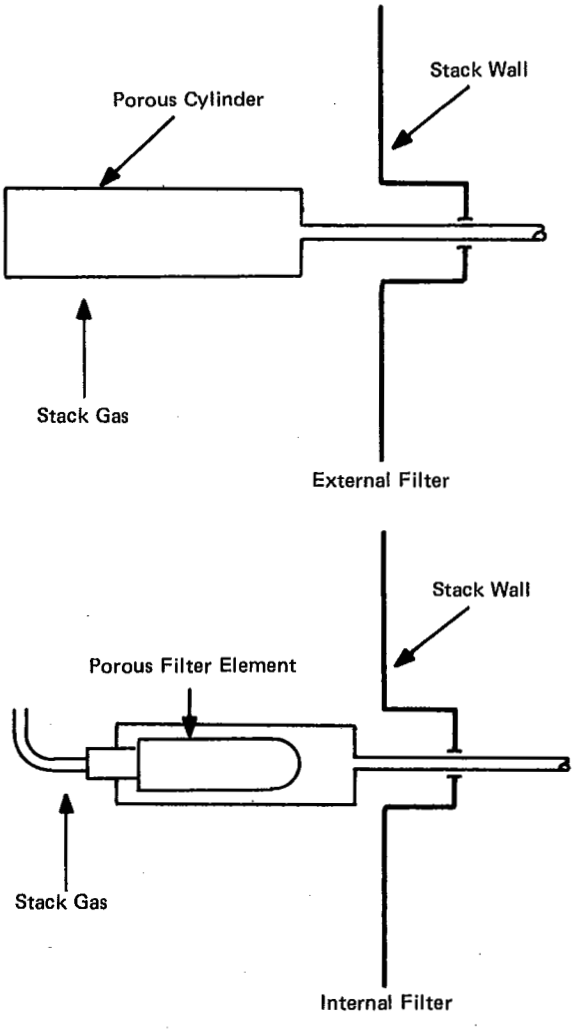

FIG. 10 EXTERNAL AND INTERNAL FILTERS

Copyright ASME International
Provided by IHS under license with ASME
No reproduction or networking permitted without license from IHS
Not for Resale

the particulate in the flue exceeds 20 microns in diameter. The filter porosity should be approximately 60 microns and provision should be made for periodic backflushing of the probe to remove caked-on particulate matter. Table 2 should be consulted to insure material compatibility with the species at the exhaust stream conditions. The purge cycle could be run at the same time as the instrument calibration to minimize data interruption. A metal baffle placed in the flue to protect the instack filter from direct impingement of the gas flow will increase filter life.

3.03.4.2.4 Where higher flue temperature or greater proportions of fine particulate are encountered, a quartz, silicon carbide, or ceramic filter mounted between the probe and the sample line may be used. The filter element is a thimble of no finer porosity than 10 microns which is mounted in an easily accessible, minimum volume holder. Care must be taken to insure that these filters do not absorb or otherwise retain the species being tested. The holder must be heated to the same or higher temperature than the sample line to prevent clogging due to condensation. Since backflushing will not usually be effective in cleaning the entrapped particulate from the filter element, periodic replacement will be required. Figure 10 shows both external and internal filter arrangements. The large surface areas can accumulate material capable of catalyzing reactions involving the species being measured. Calibration will determine the extent of this effect, which cannot be tolerated.

3.03.4.2.5 Reflux filter systems combine primary and secondary filtration techniques to provide a filtration system which can handle large amounts of particulates and reduce particulate size in the conditioned sample stream to less than 1 micron. Figure 11 schematically shows the reflux system. This system incorporates the basic sampling concepts of water or steam washing, but with one major difference; the cleaned sample gas itself is used as the scrubbing medium. This system can also be thought of as a continuous blowback, thus two major primary filter concepts have been incorporated into reflux filtration. The majority of the particulates are rejected and do not enter the probe. A secondary filtration section is required to remove the remaining particulates down to 1 micron or less.

3.03.4.2.6 The operation of the reflux filtration system is as follows: The sample from the stack is drawn through the clean reflux sample stream where dirt particles and aerosols (acid mist) are blown back by the action of high velocity gas molecules. After the sample is scrubbed, it passes through the secondary filter and then is pressurized by a pump. A small portion of the sample is sent to the dryer (2-3 1/min), while most of the sample (17-20 1/min) is sent back as the clean reflux sample stream. After scrubbing the incoming sample, the reflux stream, along with dirt particles, discharges into the process stream.

3.03.4.2.7 Below 10-20 microns, particulate matter in low concentrations will remain suspended in the sample stream as long as condensation is prevented through heating of the sample line. This finer particulate will still interfere with instrument operation and must be removed in the analysis area. The stainless steel clamshell filter holder containing an easily replaceable fiber glass filter is the best approach. By placing this immediately before the sample pump, the pump and bypass flow valving are protected from particulate matter as well as the instrumentation.

3.03.4.3 Temperature Control

3.03.4.3.1 Analysis systems for hydrocarbons must be maintained at 374 ± 9°F(190°C ± 5°C) from the probe to the flame ionization detector (FID) to prevent the condensation or oxidation of the hydrocarbons. Usually the FID instrument will contain a heated pump so that no other pump is required in the system. A heated fiberglass filter must be placed in the sample line preceding the instrument.

3.03.4.3.2 For sampling, SO_2, NO, and NO_2, the sample must be brought to the analysis area at no less than 250°F(121°C). Samples for SO_3 analysis need to be at least 300°F(149°C), see Fig. 8. If instrumental analysis is to be used, these temperatures must be maintained to the instruments. For instruments requiring lower sample temperature the temperature must also be maintained up to the moisture removal device. A heated filter must be inserted in the line. Normally, the pump operating temperature will be sufficient to maintain sample temperature through the pump.

3.03.4.3.3 CO, CO_2, and H_2S measurements can be made on cool sample streams since these gases are not appreciably moisture soluble at higher concentrations. Condensation knock-out traps must be inserted into the sample line wherever the temperature is lowered. These will usually be part of drying systems as described under Moisture Control.

3.03.4.4 Moisture Control

3.03.4.4.1 Since the moisture in a flue gas stream can vary according to the rate of combustion, the ambient humidity, and the fuel-contained moisture, most gas con-

Copyright ASME International
Provided by IHS under license with ASME
No reproduction or networking permitted without license from IHS
Not for Resale

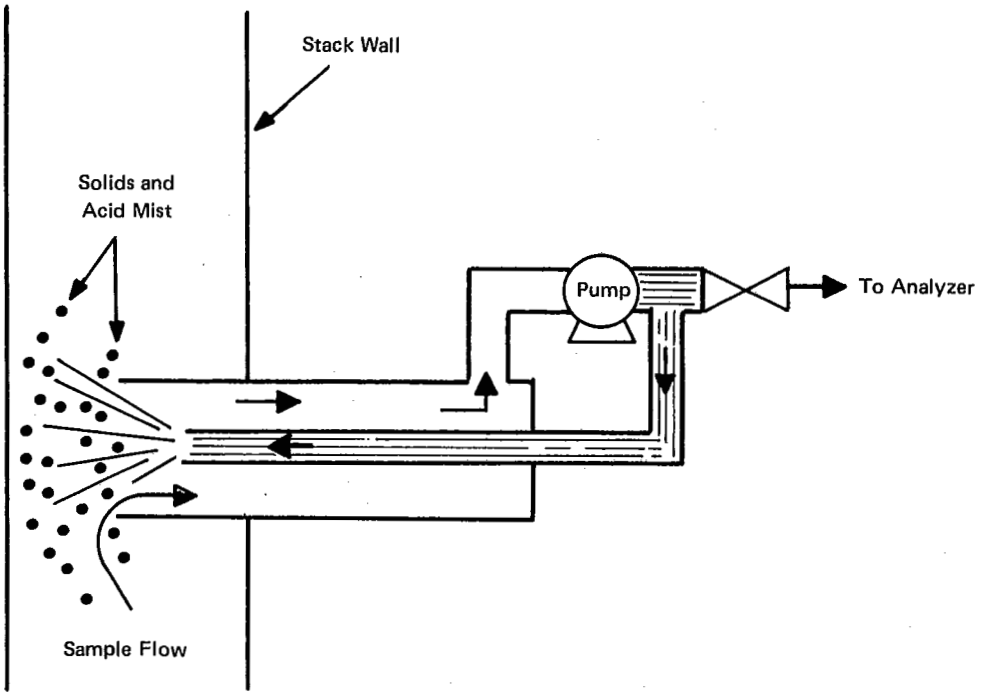

FIG. 11 REFLUX FILTRATION

centrations are reported on either a dry basis or calculated to a constant percent moisture. Ideally, the moisture should not condense before the moisture removal device and it should condense rapidly in this device. In analyzing for CO, CO_2, O_2, and H_2S, it is possible to completely dry the gas stream prior to analysis without appreciably affecting measurements. This is preferable when using non-dispersive infrared (NDIR), gas chromatographic, para-magnetic, and most other instrumental detection systems since the possibility of condensation and consequent reduced instrument performance is eliminated. In the NDIR CO analyzer, moisture interference is also eliminated by complete drying of the sample.

3.03.4.4.2 The air condenser consisting of copper, stainless or glass coil of tubing connected to a liquid trap is often sufficient for the collection of integrated bag samples. These may be used for Orsat analysis or the analysis of non-condensible, non-soluble gases such as methane. Figure 12 shows a schematic of an air-cooled condenser used with an integrated bag sampler. The efficiency of this trap is improved by placing the coil in an ice bath. This arrangement is useful in short-term instrumental monitoring.

3.03.4.4.3 For continuous monitoring, the use of a stainless coil in a refrigerated bath will give long, trouble-free service. It should be designed to minimize contact between the condensed liquid and the sample stream. Also automatic draining should be provided.

3.03.4.4.4 The permeation dryer also removes virtually all the water in a sample gas stream without affecting the gas concentrations. The wet stream is contacted with an ion-exchange membrane which is permeable to moisture in the gas phase. The other side of the membrane is either evacuated or purged with dry air. The sample line and the dryer must be heated above the dew point since only gas phase moisture can be removed. The permeation dryer has the advantages of not requiring refrigeration or a condensate trap. It has been recommended for systems measuring NO_2 and SO_2 in sources having a low particulate concentration.*

3.03.4.4.5 A less desirable method for controlling condensation is by dilution of the sample with clean dry air using permeable membranes or flow proportionation. These are not recommended because of the possibility of additional error from imprecise calibration.

3.03.4.4.6 Desiccants may be used for drying certain gases such as CO but generally interfere with most other pollutants.

*Walden Research Report – EPA – 650/2-74-089 (October, 1974) EPA, Research Triangle Park, N.C. 27711

Copyright ASME International
Provided by IHS under license with ASME
No reproduction or networking permitted without license from IHS
Not for Resale

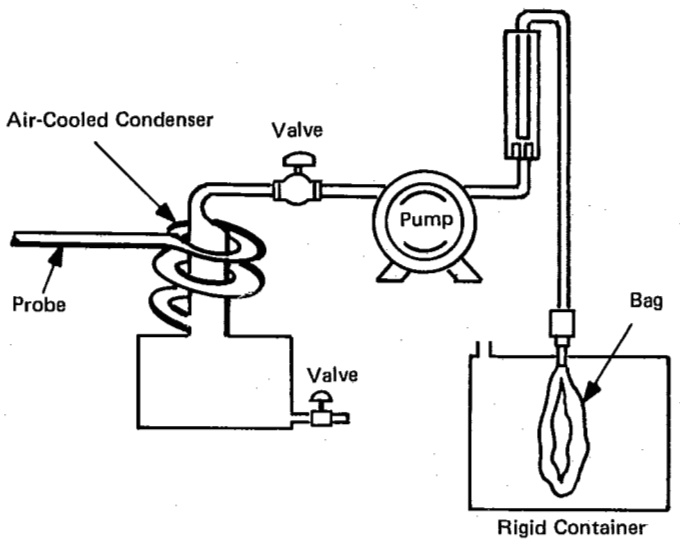

FIG. 12 AIR-COOLED CONDENSER ON INTEGRATED BAG SAMPLER

3.03.4.5 Removal of Interference Gases

3.03.4.5.1 No generalizations can be made concerning interferring gases with the exception of an unalterable rule: Every analytical method or instrument which is used in an extractive measurement system must be examined with respect to its sensitivity to all gases which might reasonably be expected in the flue. Where interferences are found, the sample conditioning system must be designed to remove the interferring gas.

3.03.4.5.2 An example already given was the interference of moisture on CO measurements by NDIR. This is removed by condensation often followed by contact with a drying agent. Electro-chemical membrane instruments are often sensitive to more than one constituent of a flue and require chemical scrubbers or internal electrical compensation. The latter is valid over a given range and requires adjustment if the interferer concentration changes appreciably.

3.03.4.5.3 Wet chemical analysis methods are also affected by interferences. In the analysis of SO_2 by peroxide oxidation, SO_3 must first be removed since it would be indistinguishable from the oxidized SO_2. This is accomplished with a preliminary isopropanol scrubber. The isopropanol scrubber is not totally satisfactory in that it removes significant amounts of SO_2 as well; it has been observed to remove 10 percent of the SO_2 at concentrations up to 150 ppm. However, there currently is nothing better available. The definitive procedure for each method must be studied to determine its applicability in the flue gas of interest.

Copyright ASME International
Provided by IHS under license with ASME
No reproduction or networking permitted without license from IHS
Not for Resale

SECTION 4, SPECIFIC GAS ANALYSIS FOR EXTRACTIVE SYSTEMS

4.01 Introduction

This section reviews the most commonly used techniques available for analysis of each species covered by this supplement. Peculiarities of the extractive system as applied to each species are also described here. Further requirements specific to individual analytical techniques are found in the Appendix.

4.02 Oxygen

4.02.1 The measurement of oxygen concentration in flue gas is used to determine the average molecular weight of the flue gas and the excess air above theoretical with which the combustion process takes place. The excess air measurement is needed to determine the gas weights leaving the combustor and the efficiency of the unit. Oxygen is often monitored to control flame stability at low excess air conditions. Oxygen concentration in exhaust gases are in the range of 0 to 21 percent when using atmospheric air for combustion. All determination methods described are applicable to this concentration range.

The sampling system for oxygen requires no special precautions due to its stability in the concentration ranges normally measured.

4.02.2 Manual Methods

The Orsat apparatus is the commonly used manual method for O_2 determination in exhaust gases. A known volume of gas sample is passed through a reagent which absorbs the oxygen. The O_2 content is then determined by the decrease in gas volume. A detailed description and operating procedure of the Orsat are presented in the Appendix (Par. 6.01.1).

4.02.3 Instrumented Methods

The available instruments for O_2 determination operate on the principles of paramagnetic attraction, catalytic combustion, electro-chemical membrane diffusion or diffusion in a zirconia cell. These methods are detailed in the Appendix (Par. 6.02.1-4).

4.03 Carbon Dioxide

4.03.1 Carbon dioxide concentrations range theoretically from 0 to 21 percent (by volume) in flue and exhaust gases when using atmospheric air for combustion. The sampling system for carbon dioxide requires no special precautions due to the stability of CO_2 and the concentration ranges normally measured. Determination methods described herein are applicable to this concentration range. However, the alkaline scrubber fluids in most power plants equipped with scrubbers will absorb CO_2 quite readily.

4.03.2 Manual Method

The Orsat apparatus is commonly used for manually determining CO_2 in exhaust gases. A measured gas sample is passed through a pipette containing a reagent where the CO_2 is absorbed by contact with the reagent. The CO_2 concentration is determined by the decrease in gas volume after the gas is passed through the CO_2 absorbent. A detailed description and operating procedure of the Orsat are presented in the Appendix (Par. 6.01.1).

4.03.3 Instrumented Methods

The instruments available for CO_2 determination operate on the principle of non-dispersive infrared absorption. This method is described in the Appendix (Par. 6.02.5).

4.04 Carbon Monoxide

4.04.1 Carbon monoxide is a colorless, odorless, tasteless gas, slightly lighter than air. It is produced during incomplete combustion of carbonaceous fuels. Since it is a pollutant gas and represents incomplete combustion, normal combustion systems are adjusted to minimize carbon monoxide concentrations. Measurements in these systems can range from 0 to 500 ppm. In unusual combustors, such as blast furnaces, the CO concentration can range up to 30 percent. Different methods of determining CO concentrations are applicable to different sources because of the wide variation of concentration.

The sampling system for measuring CO must be designed to avoid extremely high probe temperatures which can cause catalytic oxidation of CO.

4.04.2 Manual Methods

The Orsat apparatus may be used for CO measurement in applications where substantial qualities of CO are produced. A typical application would be a coke oven, where there is 5 to 8 percent CO concentration in the flue gas. The Orsat should not be used where less than 1 percent CO is found because the Orsat's minimum sensitivity is 0.5 percent. The Orsat commonly has a 0 to 20 percent range. A measured gas sample is bubbled through a pipette where CO is absorbed by a reagent in the pipette. The CO concentration is determined by the decrease in gas volume after

Copyright ASME International
Provided by IHS under license with ASME
No reproduction or networking permitted without license from IHS
Not for Resale

passing through the CO absorbent. A detailed description and operating instructions of the Orsat are presented in Appendix 1 (Par. 6.01.1).

4.04.3 Instrumented Methods

The instruments available for CO determination operate on the principles of non-dispersive infrared absorption, electro chemical membrane diffusion or gas chromatography with or without a reducing cell and FID. These methods are described in the Appendix (Par. 6.02).

4.05 Nitrogen

4.05.1 Free nitrogen in exhaust gas is not considered a pollutant. 78 percent of the atmosphere is made up of this gas. The free nitrogen content of exhaust gas may contain nitrogen liberated from the fuel as well as unreacted nitrogen contributed by the combustion air. The free nitrogen content of exhaust gas can be determined by subtracting from 100 percent the measured quantities of the other gases. For example, if the pollutants are considered negligible, then the nitrogen can be determined with an Orsat analysis once the O_2 and CO_2 content have been measured.

4.06 Sulfur Oxides

4.06.1.1 Sulfur oxides are emitted as air pollutants from industrial processes such as smelters, sulfuric acid plants and fossil fuel combustion plants. SO_2 is measured to monitor the efficiency of pollutant abatement equipment and is sometimes monitored continuously for compliance with regulations. SO_3 concentration is measured to control cold end corrosion. Stationary combustion sources emit mostly sulfur dioxide with a small amount of sulfur trioxide. The SO_2, which leaves the stack is eventually oxidized to SO_3 in the atmosphere or when it is washed out of the atmosphere by rain. SO_3 readily combines with atmospheric moisture to form H_2SO_4, sulfuric acid. SO_2 emissions range from zero in combustion with natural gas to over 5000 ppm in lead smelters. The methods described herein are applicable to this range of concentrations.

4.06.1.2 All methods for the determination of sulfur oxides require a heated sample train to eliminate condensation. SO_2 readily dissolves in water and becomes oxidized to SO_3, reducing precision and accuracy in SO_3 collection. In addition, SO_2 measurement will be effected, but to a lesser degree. When calibrating a sampling system for SO_2 or SO_3, water should be present in the moisture trap and oxygen present in the calibration gas.

4.06.2 Manual Method

The Federal EPA Method 6, which is given in Par. 6.01.4, is recommended for applications requiring only measurements of SO_2. The Brookhaven Controlled Condensations System, given in Par. 6.01.5, is recommended for applications requiring both SO_2 and H_2SO_4 vapor measurements. The sample collection hardware and procedures of the controlled condensation system are similar to those of the Intersociety procedures, but include significant changes that improve the technique's accuracy. (Methods 711 and 712, "Methods of Air Sampling and Analysis," Second Edition (Morris Katz, Editor). Amer. Pub. Health Association, 1977.)

4.06.3 Instrumented Methods

Continuous instrumented methods available for the determination of sulfur dioxide operate on various principles including non-dispersive infrared absorption, electrochemical membrane diffusion, electrolytic titration, chemiluminescence and pulsed UV fluorescence. Flame photometry is used to measure the total sulfur of all gaseous compounds in a gas sample or can be combined with gas chromatography to measure the individual sulfur containing species. These methods are described in detail in the Appendix (Par. 6.02).

4.07 Nitrogen Oxides

4.07.1.1 Nitrogen oxides (NO_x) are generated by the oxidation of atmospheric and fuel-bound nitrogen in most combustion processes. The most important NO_x species in exhaust streams are nitric oxide (NO) and nitrogen dioxide (NO_2). NO is a colorless gas while NO_2 gas has a reddish-brown color. NO is the only oxide of nitrogen present in significant concentrations at flue gas temperature. NO_2 reaches a few parts per million at flue gas temperatures but can increase as the NO oxidizes downstream of the combustion. Occasionally, NO and NO_2 are measured individually, but most often the determination of total nitrogen oxides (NO_x) is adequate. The rate of formation of NO is exponentially dependent on the maximum combustion temperature, increases with the square root of combustion pressure, and is significantly increased by reaction of oxygen with nitrogen bound in the fuel. The primary variable affecting the selection of an analytical method is the concentration of NO_x expected. NO_x emission levels vary considerably, from 30 ppm in water injected gas turbines to 1200 ppm in certain coal-fired power plants.

Copyright ASME International
Provided by IHS under license with ASME
No reproduction or networking permitted without license from IHS
Not for Resale

4.07.1.2 The sampling system for measuring NO_x must remove moisture. However, NO_2 will be removed by all but the best moisture traps. Permeation dryers can be used as a means of moisture removal without NO_2 loss.

4.07.1.3 When calibrating systems for either NO or NO_2, the system should include water in the moisture trap and oxygen in the calibration gas. Oxygen is needed in the calibration gas because both NO and NO_2 may react with oxygen. An inadequately designed sampling system would not show this interfering reaction if calibration gas did not include oxygen.

4.07.2 Manual Method

The phenol-disulfonic acid (PDS) method or the Saltzman method of analysis can be used to measure total NO_x when differentiation of the various oxides of nitrogen is not required. The ASTM/ANSI D-1608-77 for PDS and the Intersociety Committee Method for Saltzman manual determinations of NO_x are presented in the Appendix (Pars. 6.01.2 and 6.01.3, respectively).

4.07.3 Instrumented Methods

The instruments available for NO_x measurement operate on the principles of chemiluminescence, electro-chemical membrane diffusion, or non-dispersive ultraviolet absorption. The methods are described in the Appendix (Par. 6.02).

4.08 Hydrogen Sulfide

4.08.1 Hydrogen sulfide (H_2S) is a colorless gas which has a characteristic odor of rotten eggs. It is generated by kraft paper mills and the catalytic cracking units and desulfurization plants of petroleum refineries. It is also found in boiler plants operating at too low oxygen concentration. Measurements normally must be made down to the range of a few ppb because of the extremely low odor threshold (15ppb) of hydrogen sulfide.

The sampling system for measuring H_2S must be designed to avoid extremely high probe temperatures which can cause catalytic oxidation of H_2S.

4.08.2 Manual Method

The $Cd(OH)_2$ method of analysis can be used to measure H_2S concentrations down to 1 ppb. The Intersociety Committee Method is given in the Appendix (Par. 6.01.6).

4.08.3 Instrumented Methods

Commercially available instruments for the determination of hydrogen sulfide emissions operate on principles of either electrolytic titration, electro-chemical membrane diffusion, gas chromatography with flame photometry or non-dispersive ultraviolet absorption. These methods are described in detail in the Appendix (Par. 6.02).

4.09 Total Hydrocarbons

4.09.1 Hydrocarbons include all compounds of hydrogen and carbon. For the purposes of combustion analysis, other organic compounds which contain oxygen, nitrogen, sulfur and the halogens are also classified as hydrocarbons. In most cases, it is sufficient to combine all these compounds into a single measurement known as total hydrocarbons and calculated as equivalent methane (CH_4). Hydrocarbons are present in flue gas from a combustion source due to incomplete oxidation of the fuel. Methane may also be present from atmospheric methane (approximately 2 ppm) which is not oxidized by the flame. Often methane is subtracted from total hydrocarbon measurements since it does not participate in atmospheric smog-forming reactions. Because of economy and efficiency, all stationary combustion processes must be adjusted for sufficient excess air to minimize hydrocarbon emissions (0-50 ppm). Stationary and mobile internal combustion engines produce higher concentrations of hydrocarbons due to the extremely short residence time of the fuel in the combustion chamber. Levels may approach several thousand ppm.

The sampling system for measuring hydrocarbons must be designed to keep the sample stream between 365 and 383°F (185 and 195°C) to prevent condensation and oxidation. There should be no moisture traps in the sample system.

4.09.2 Instrumented Methods

Commercially available instruments for monitoring hydrocarbon emissions operate on the principles of either non-dispersive infrared absorption or flame ionization detection, or gas chromatography with flame ionization detector. These methods are described in the Appendix (Par. 6.02).

Copyright ASME International
Provided by IHS under license with ASME
No reproduction or networking permitted without license from IHS

Not for Resale

SECTION 5, IN-SITU AND REMOTE SYSTEMS

5.01 In-Situ Systems

5.01.1 In-situ systems offer both advantages and disadvantages over extractive systems. The in-situ system permits one instrument to measure several exhaust species, requires little maintenance and is not subject to errors from a sampling system. However, as with extractive systems, the user must have a thorough knowledge of the condition of his exhaust gas if the data will be useful. The user must realize that the system will probably have to be dedicated to a single exhaust. Individual instrument manufacturers should be contacted with regard to the specific application.

5.01.2 The principle of the in-situ spectrometric system involves sending energy of a known spectrum across the exhaust to a sensor. The alteration of the spectrum by the exhaust is compared to a standard by the system's logic unit to determine the concentration of one or more species. The alteration normally involves absorption of certain wavelengths by the species of concern but the criteria the system used to determine concentrations could be other than simple absorption; e.g., relative absorption at two or more wavelengths or the slope of the absorption as a function of wavelength at a certain wavelength may determine species concentrations. The complexity of the logic in the systems is related to possible interfering species in the exhaust.

5.01.3 The source and sensor of the system must be located at a stack (or duct) penetration. They may be arranged in one of two configurations: (1) the source on one side of the stack (or duct) and the sensor on the other, oriented so that the energy from the source is collected by the sensor; (2) both the source and sensor co-located at the same stack (or duct) penetration with a reflection device (normally mounted on the opposite wall of the stack (or duct) to return the energy to the sensor.

5.01.4 The extractive system drawing through one or more probes delivers a sample taken from discrete points in the cross section. However, the in-situ system, with its small beam cross section will observe a different concentration if the specie measured is not homogeneous. The observed concentration for either will equal the true concentration when there are no concentration gradients in the stack (or duct). This error may not be too important in many exhaust systems. The in-situ system is accurate if it is corrected for the gradients and if the gradients do not change. The user should also calibrate the in-situ with an extractive system. If the exhaust has previously been probed using extractive systems, knowledge of the exhaust homogeneity can be used to correct in-situ system readings.

5.01.5 The normal means for calibrating an in-situ system is to place a microsample of the gaseous species being observed in the optical path of the system. The sample is contained in a suitable container, such as glass or quartz. An alternate means of calibration uses optical filters which have been correlated to known concentration. However, some species such as SO_3 are not stable even in the microsample capsules, and these microsamples have to be calibrated periodically. For most gas species, the microsamples have proven to be quite reliable.

5.02 Remote Systems

5.02.1 Remote measurement systems were developed to measure atmospheric concentrations. In recent years, several remote techniques have been developed for air pollution monitoring purposes. While remote systems have inherent problems that may keep them from being as accurate as systems dedicated to a single stack, they may have a future because of their qualitative accuracy. One application is tracking a plume with a high constituent concentration back to the source. Other applications are ambient monitoring (e.g., from aircraft or satellite) and screening tests. Remote systems which are currently being used are the following: correlation spectrometer, long path absorption method, passive emission method, Lidar and Raman spectrometers.

Copyright ASME International
Provided by IHS under license with ASME
No reproduction or networking permitted without license from IHS
Not for Resale

6.01 Manual Methods of Analysis. In all of the manual methods having origin as ASTM or other agency, the user should verify that he is using the most recent version.

6.01.1 Manually Operated Orsat

6.01.1.1.1 The Orsat apparatus shown in Fig. 13 is a commonly used gas analyzer for determining percentage concentrations of CO_2, O_2, and CO. Several types have been developed, alike in principle, but differing in detail. Basically, the percentage of the main constituents in flue gas are determined by successive absorption of carbon dioxide, oxygen, and carbon monoxide from a measured gas sample in reagent-filled pipettes. The decrease in volume caused by each absorption under constant pressure and temperature is a measure of each constituent with the remaining portion of the sample considered to be nitrogen. The results obtained with each sample are given on a dry basis, and the water vapor present in the flue gas requires an independent determination. However, the moisture may be obtained by calculation when required to determine the efficiency of the unit.

6.01.1.1.2 The standard Orsat has three absorption pipettes which may be the type that absorbs gas by either bubbling through the reagent or by contact without bubbling. Each pipette shall have a capacity of not less than 50 cc of reagent. The burette shall have a measuring capacity of 50 cc, and it shall be water-jacketed to eliminate errors due to temperature change in the gas.

6.01.1.2 Standard Procedure

6.01.1.2.0 The procedure for preparing the instrument for sampling and for measuring the sample accurately are covered in detail in the Orsat manufacturer's instruction book supplied with the instrument. These instructions should be carefully read and followed. Briefly, the general procedure is as follows:

6.01.1.2.1 Fill the pipettes and burette with the proper solutions and bring the level to the reference mark on each pipette. Care is required when charging the oxygen pipette to minimize exposure of the solution to air and hence exhausting the solution.

6.01.1.2.2 Run a leakage test to be certain the Orsat is tight. This may be accomplished by filling the burette half full of air, closing all valves to include the capillary manifold in the test, and then noting if the confining liquid continues to rise or fall when the leveling bottle is elevated or lowered. Leakage must not exceed ¼ cc in five minutes.

6.01.1.2.3 Insure that the confining solution in the burette is saturated with gas by allowing the gas sample to rapidly bubble through for a minimum of ten minutes.

6.01.1.2.4 When the above requirements have been met, start with the burette full of solution and draw in approximately 50 cc of gas sample by lowering leveling bottle. Close the gas valve and open the atmospheric valve to expel the sample. Repeat this procedure four or five times or until a representative sample is retained in the burette. At this point care must be taken to assure that a 50 cc sample will be analyzed by discharging the excess to atmosphere, being sure no air is drawn into the burette during the leveling process. The liquid level in the burette must be at the zero mark when the surface in the leveling bottle is brought to the same level.

6.01.1.2.5 Raise the leveling bottle and open valve to the carbon dioxide pipette, forcing the sample into the pipette. Slowly pass sample back and forth three times and measure absorption by bringing the liquid level in the bottle even with the level in burette. Pass sample through the CO_2 pipette again and note any change in level. Repeat absorption until there is no further decrease in volume; then take reading. One such check reading is usually sufficient.

6.01.1.2.6 Follow a similar procedure for the oxygen and carbon monoxide determinations, keeping a record of the volume absorbed in each case. The acid cuprous chloride solution used to absorb carbon monoxide will sometimes evolve gas to the sample and affect the volume. The sample should be passed through the reagents in the carbon dioxide pipette before passing it to the carbon monoxide pipette for measurement.

6.01.1.2.7 Finally, expel the sample to atmosphere by bringing the burette solution up to the reference mark, and the Orsat is then ready for the next sample.

6.01.1.3 Precautions

6.01.1.3.1 The following general precautions must be taken to avoid possible error and to obtain the best possible results:

6.01.1.3.2 The manifold capillary tube connecting

Copyright ASME International
Provided by IHS under license with ASME
No reproduction or networking permitted without license from IHS

Not for Resale

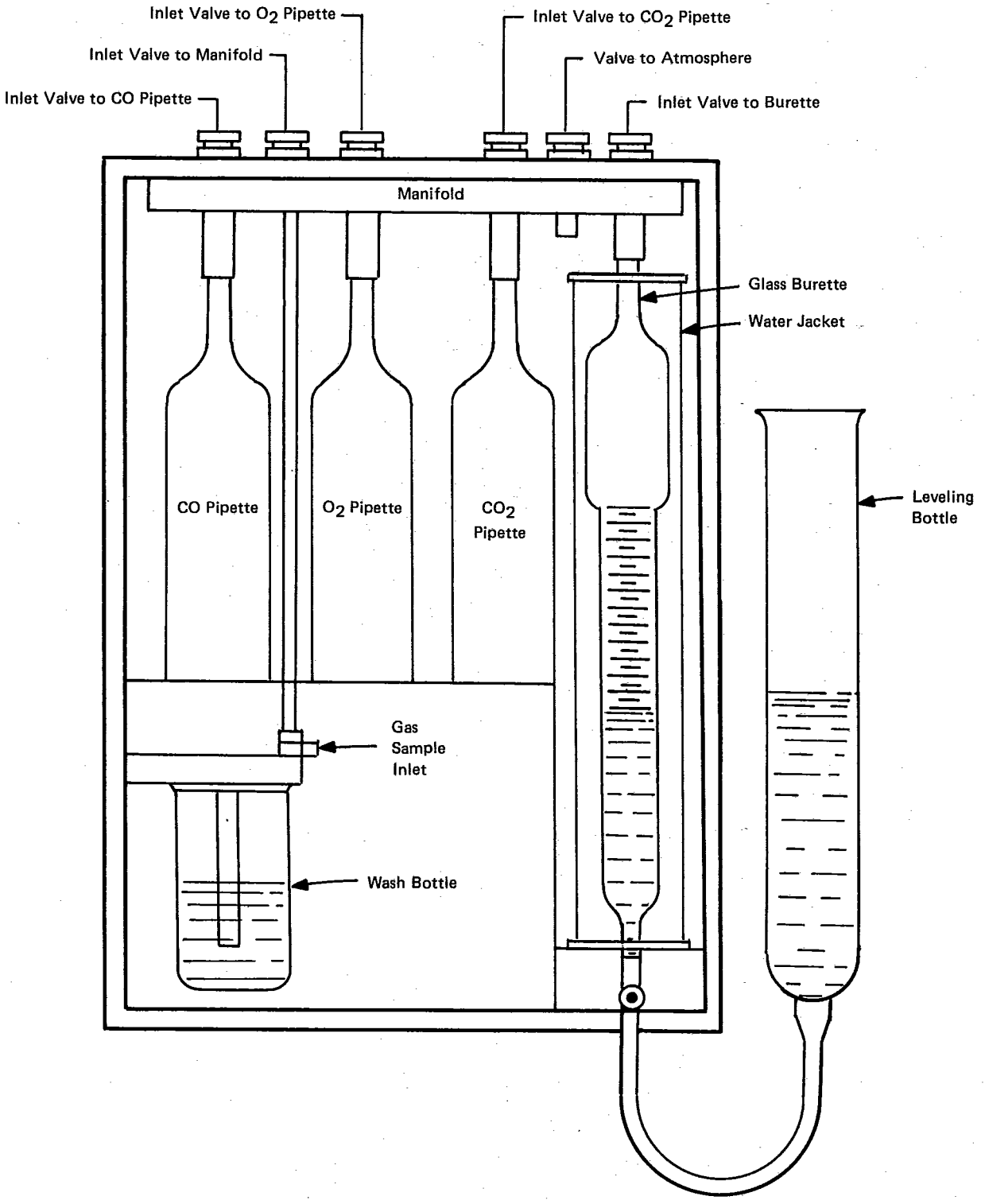

FIG. 13 TYPICAL ORSAT APPARATUS

Copyright ASME International
Provided by IHS under license with ASME
No reproduction or networking permitted without license from IHS
Not for Resale

the pipettes shall be kept free from absorbent solution. One drop is sufficient to spoil the test reading.

6.01.1.3.3 As a safety measure, take care not to let the reagents contact any part of the body or clothing.

6.01.1.3.4 Use water between the water-jacket and burette to prevent variations in gas volume because of changes in sample gas temperature.

6.01.1.3.5 All gases, especially sulfur dioxide and carbon dioxide, are soluble in water to some extent. Bubble the sample rapidly through the confining liquid in the burette for 10 minutes to assure saturation with sample gas before taking readings.

6.01.1.3.6 Absorbent solutions remove constituents chemically and, to a small extent, physically. However, after the first one or two analyses, the solutions become saturated and the error caused by solubility becomes negligible.

6.01.1.3.7 A 5°F (2.8°C) change in temperature of the gas during analysis makes a difference of 1 percent in volume at constant pressure. This source of error is eliminated by allowing sufficient time for the apparatus to stabilize at ambient temperature before reading and by shielding from drafts.

6.01.1.3.8 Allow time for the solution to drain down the sides of the burette, and this time should be approximately the same before each measurement.

6.01.1.3.9 Leakage tests shall be made before using the apparatus.

6.01.1.3.10 Keep connecting tubing between the sampling probe and Orsat free of leakage and as short as possible.

6.01.1.4 Absorbing Reagents

The chemical reagents normally used in the Orsat apparatus are given in Table 3.

TABLE 3

Standard Orsat Reagents

Component Absorbed	Reagent	Remarks
Carbon Dioxide (CO_2)	(a) Potassium Hydroxide (b) Sodium Hydroxide	Dissolves 20 times its own volume of CO_2.
Oxygen (O_2)	(a) Alkaline Pyrogallic Acid	Dissolves 10 times its own volume of O_2. Light sensitive, keep in dark place.
	(b) Chromous Chloride	Most rapid known.
	(c) Fieser's Solution	Difficult is prepare. Unstable.
	(d) Sodium Pyrogallic Acid	Used when sodium hydroxide is used for CO_2.
Carbon Monoxide (CO)	(a) Acid Cuprous Chloride (b) Cuprous-Sulphate Betanaphthol	
	Confining Solution	Used as measuring burette and displacement fluid. Minimizes error due to gas solubility.

Copyright ASME International
Provided by IHS under license with ASME
No reproduction or networking permitted without license from IHS
Not for Resale

Standard Test Method for OXIDES OF NITROGEN IN GASEOUS COMBUSTION PRODUCTS (PHENOL-DISULFONIC ACID PROCEDURES)[1]

This Standard is issued under the fixed designation D 1608; the number immediately following the designation indicates the year of original adoption or, in the case of revision, the year of last revision. A number in parentheses indicates the year of last reapproval.

1. Scope and Application

1.1 This method describes the phenol-disulfonic acid colorimetric procedure **(1)**[2] for the determination of total oxides of nitrogen [nitrous oxide (N_2O) excepted] in gaseous effluents from combustion and other nitrogen oxidation processes.

1.2 It is applicable to a concentration range of oxides of nitrogen as nitrogen dioxide (NO_2) of 5 ppm to several thousand parts per million by volume (four to several thousand milligrams per dry standard cubic metre).

1.3 Since the grab sampling technique used takes a relatively small sample over a very short period of time, the result obtained will be an instantaneous measure of the nitrogen oxides and, therefore, will be representative of the emissions only if the gas stream is well mixed and the concentration constant with time. Multiple samples are recommended.

2. Applicable Documents

2.1 *ASTM Standards*:

D 1193 Specification for Reagent Water[3]

D 1356 Definitions of Terms Relating to Atmospheric Sampling and Analysis[4]

D 1357 Recommended Practice for Planning the Sampling of the Atmosphere[4]

D 1605 Recommended Practices for Sampling Atmospheres for Analysis of Gases and Vapors[4]

E 200 Preparation, Standardization, and Storage of Standard Solutions for Chemical Analysis[4]

3. Summary of Method

3.1 The gas sample is admitted into an evacuated flask containing an oxidizing absorbing solution consisting of hydrogen peroxide in dilute sulfuric acid. The oxides of nitrogen are converted to nitric acid by gas phase oxidation due to oxygen in the sample and by the absorbent solution. The resulting nitrate ion is reacted with phenol disulfonic acid to produce a yellow compound (the tri-ammonium salt of 6-nitro-1-phenol-2,4-disulfonic acid) which is measured colorimetrically. Calibration curves, prepared from samples of known nitrate content, are used to determine the amount of nitrate in the sample with results expressed as nitrogen dioxide.

4. Significance

4.1 This method provides a means to measure the total nitrogen oxides (NO_x) content of gaseous emissions for purposes such as determining compliance with regulations, studying the effect of various abatement procedures on NO_x emissions, and checking the validity of instrumental measurements.

5. Definitions

5.1 For definitions of terms used in this method, refer to Definitions D 1356.

6. Interferences (1,2)

6.1 Inorganic nitrates, nitrites, or organic nitrogen compounds that are easily oxidized to nitrates interfere with the method and give erroneously high results. The presence of certain reducing agents, for example, sulfur dioxide (SO_2), may interfere by consuming part of the hydrogen peroxide in the absorbing solution to leave an inadequate amount for reaction with the oxides of nitrogen. Halides lower the results but interference from halide ion (and lead) are negligible in the concentration usually encountered in combustion sources.

6.2 The role of some of the constituents of combustion effluents as possible interfering substances has not been thoroughly investigated.

---

[1] This method is under the jurisdiction of ASTM Committee D-22 on Sampling and Analysis of Atmospheres and is the responsibility of Subcommittee D22.06 on Source Sampling.

Current edition approved April 29, 1977. Published June 1977. Originally published as D 1608 - 58 T. Last previous edition D 1608 - 60 (1967).

[2] The boldface numbers in parentheses refer to a list of references at the end of this method.

[3] *Annual Book of ASTM Standards*, Part 31.

[4] 1976 *Annual Book of ASTM Standards*, Part 26.

This Specification published and copyrighted by The American Society for Testing and Materials is reproduced with its permission.

Copyright ASME International
Provided by IHS under license with ASME
No reproduction or networking permitted without license from IHS
Not for Resale

7. Apparatus

7.1 The assembled sampling apparatus is shown in Fig. 1.

7.2 *Barometer*, capable of measuring atmospheric pressure to ±2 mm (0.1 in.) Hg.

7.3 *Bottles*, 120-ml or 4-oz, glass or polyethylene, with leak-free noncontaminating caps.

7.4 *Evaporating Dishes*, new condition, unetched borosilicate glass or procelain, about 200-ml capacity. Do not use platinum ware **(7)**.

7.5 *Mercury Manometer*, open-end U-tube, 1-mm (or 36-in.) with 1-mm (or 0.1-in.) divisions.

NOTE 1—An unbreakable, roll-up type is convenient for this application.

7.6 *Microburet*, 10-ml capacity, with 0.01-ml divisions.

7.7 *pH Paper*, or litmus paper, covering the range from 7 to 14 pH.

7.8 *Sample Collection Flask, Calibrated*—Two-liter round-bottom glass flask with a short neck 24/40 standard-taper joint, protected against implosion or breakage with tape or foamed plastic, with known volume.

7.9 *Sampling Probe*, borosilicate glass, approximately 6-mm inside diameter, fitted with a 12/5 spherical joint for attachment to the three-way stopcock on the sample collection flask, provided with a filter on the inlet end for removal of particulate matter, long enough to extend about third- to halfway into the stack or duct (or at least 1 m beyond inside wall of stacks greater than 2 m in diameter), and heated or insulated, or both, sufficiently well to prevent condensation of moisture while purging and sampling.

7.10 *Spectrophotometer*, or filter photometer, capable of measuring absorbance at 405 nm.

NOTE 2—A wavelength of 400 nm was actually used in the Project Threshold tests, but recent work **(3,6,7)** has shown that the absorbance peak maximum is actually at 405 nm which is therefore a better choice. This change should tend to improve the precision and accuracy of the method.

7.11 *Squeeze-bulb*, rubber, valved for one-way flow to purge sampling probe.

7.12 *Stirring Rod*, polyethylene, to avoid scratching the evaporating dishes.

7.13 *Stopcock, Three-way, T-bore*, with a 24/40 $ joint for attachment to the sample collection flask, and a 12/5 spherical joint for attachment to the sampling probe.

7.14 *Stopcock Grease*, high vacuum, high temperature, inert.[5]

7.15 *Thermometer*, dial-type or glass, with 1°C (2°F) divisions and an approximate range from −5 to 50°C (25 to 125°F).

7.16 *Vacuum Pump*, portable, capable of evacuating the sample collection flask to a pressure of about 25 mm (1 in.) Hg absolute, or less.

7.17 *Volumetric Flasks*, 50, 100, 1000-ml capacity.

7.18 *Volumetric Pipets*, 1, 2, 3, 4, and 5-ml capacity.

7.19 *Water Bath or Steam Bath*, operating at approximately 100°C (212°F) (an electric hot plate is not suitable because it tends to cause spattering and possible loss of sample).

8. Reagents

8.1 *Purity of Reagents*—Reagent grade chemicals shall be used in all tests. Unless otherwise indicated, it is intended that all reagents shall conform to the specifications of the Committee on Analytical Reagents of the American Chemical Society, where such specifications are available.[6] Other reagents may be used provided it can be demonstrated that they are of sufficiently high purity to permit their use without decreasing the accuracy of the determination.

8.2 *Purity of Water*—Unless otherwise indicated, references to water shall be understood to mean reagent water conforming to Type III or better of Specification D 1193. Additionally, this method requires water that is nitrate-free as demonstrated by a low blank absorbance reading (less than 0.002 nm) in Section 12.

8.3 *Absorbing Solution*—Dilute 3.0 ml of hydrogen peroxide (H_2O_2, 3 %) to 100 ml with sulfuric acid solution (H_2SO_4, 3+997). A fresh solution must be prepared weekly. Do not expose to excessive heat or direct sunlight for prolonged time.

8.4 *Ammonium Hydroxide (sp gr 0.90)*—Concentrated ammonium hydroxide (NH_4OH). A fresh solution must be used.

8.5 *Fuming Sulfuric Acid* ($H_2SO_4 \cdot XSO_3$), 15 to 18 weight percent free sulfur trioxide. **Caution**—Handle with care.

8.6 *Hydrogen Peroxide (3 %)*—Dilute 10 ml of concentrated H_2O_2 (30 %) to 100 ml. A fresh solution must be prepared each time new absorbing solution is prepared.

NOTE 3—If the strength of the H_2O_2 (30 %) is in doubt, test as follows: Weigh accurately about 5 ml of the H_2O_2 solution and dilute to exactly 500 ml. To 20 ml of the dilute solution add 20 ml of H_2SO_4

[5] "Halocarbon Chemically Inert Stopcock Grease" made by the Halocarbon Products Corp., 82 Burlews Court, Hackensack, N. J., has been found satisfactory for this purpose.

[6] "Reagent Chemicals, American Chemical Society Specifications," American Chemical Society, Washington, D. C. For suggestions on testing reagents not listed by ACS, see "Reagent Chemicals and Standards," by Joseph Rosin, D. Van Nostrand Company, Inc., New York, N. Y., and the "United States Pharmacopeia."

Copyright ASME International
Provided by IHS under license with ASME
No reproduction or networking permitted without license from IHS
Not for Resale

(1+9) and titrate with 0.1 *N* potassium permanganate ($KMnO_4$) solution to a permanent pink color. One millilitre of 0.1 *N* $KMnO_4$ solution = 0.001701 g of H_2O_2.

8.7 *Phenol* (C_6H_5 OH), pure white solid.

8.8 *Phenol Disulfonic Acid Solution*—Dissolve 25 g of phenol in 150 ml of concentrated H_2SO_4 (sp gr 1.84) by heating on a steam bath. Cool, add 75 ml of fuming H_2SO_4 (15 to 18 % SO_3) and heat on the steam bath at 100°C (212°F) for 2 h. Cool and store in a dark glass-stoppered bottle. The solution should be colorless; it deteriorates on long standing. Discard if a yellow color develops.

8.9 *Potassium Nitrate* (KNO_3)—Dry in an oven at 105 to 110°C for 2 h just before preparation of the standard solution.

8.10 *Potassium Nitrate, Stock Standard Solution (1 ml = 1 mg NO_2)*—Dissolve exactly 2.1980 g of dried KNO_3 in water and dilute to 1 litre in a volumetric flask.

8.11 *Potassium Nitrate, Working Standard Solution (1 ml = 100 μg NO_2)*—Dilute 10 ml of the stock standard potassium nitrate solution (1 ml = 1 mg NO_2) to 100 ml with water in a volumetric flask.

8.12 *Sodium Hydroxide Solution (~1 N)*—Slowly add 40 g of sodium hydroxide (NaOH) pellets to 800 to 900 ml of water in a 2-litre beaker with stirring until all pellets are dissolved. Dilute to 1 litre with water and mix well. Store in an airtight polyethylene or polypropylene bottle.

8.13 *Sulfuric Acid (sp gr 1.84)*—Concentrated H_2SO_4, minimum assay 95 %.

8.14 *Sulfuric Acid (3+997)*—Carefully add 3 ml of concentrated H_2SO_4 (sp gr 1.84) to water and dilute to 1 litre.

9. Safety Precautions

9.1 Cover the glass sample collection flask, which is evacuated during the sampling procedure, with tape or foamed plastic to avoid injury in case of implosion or breakage.

9.2 The fuming sulfuric acid used in preparing the phenol disulfonic acid reagent is highly corrosive and fumes in moist air. Wear protective gloves, apron, and face shield, and carry out the reagent preparation in a hood.

9.3 Concentrated acids and bases are used throughout the laboratory procedure. Use care when adding them to other solutions to avoid overheating and skin contact.

10. Sampling

10.1 Pipet 25.0 ml of absorbing solution into a calibrated sampling flask and attach the three-way stopcock to the flask (Note 4) with the T-bore in the purge position. Insert the sampling probe tip about third- to halfway into the stack or duct, or at least 1 m into stacks greater than 2 m in diameter, in such a way as to prevent leakage of air into the stack around the probe. Assemble as shown in Fig. 1, making sure that all ground-glass joints have been properly greased, and that all joints and fittings are tight and leak-free. Turn the flask stopcock to the evacuate position and evacuate the flask to the incipient boiling of the solution. If the incipient boiling of the solution cannot be seen, this will be indicated on the manometer by a low and constant reading (usually around 2.5 to 4.0 kPa (20 to 30 torr or 0.8 to 1.2 in. Hg). Shut off the pump valve and then the pump. Check for leakage by observing the manometer for any pressure increase. Any increase greater than 1.33 kPa (10 torr or 0.4 in. Hg) over a 1-min period is not acceptable; do not take a sample until the leakage problem is corrected. Turn the flask stopcock to the purge position. Using a pump or a valved rubber squeeze bulb, thoroughly purge the sampling probe and the flask stopcock with the sample gas until the probe and stopcock are warmed to the gas temperature and free of condensate. If condensation remains, heat the probe and purge until the condensation disappears. With the pump valve and pump shut off, turn the flask stopcock to the evacuate position and record the flask temperature, the difference in mercury levels in the manometer, and the barometric pressure. The absolute pressure in the flask is equal to the barometric pressure minus the manometer reading. Immediately, turn the stopcock to the sample position so that the gas enters the flask and the pressures in the flask and the sample line are equalized (usually about 15 s are sufficient). Turn the stopcock to the purge position to seal the flask and allow the gas to remain in contact with the absorbing solution overnight (Note 5) at room temperature. For further information on sampling, refer to Recommended Practice D 1357 and Recommended Practices D 1605.

NOTE 4—The end 6 mm (1/4 in.) of the male 24/40 standard-taper joint is not lubricated, to minimize contact of the gas sample with stopcock grease during absorption.

NOTE 5—If an overnight absorption period is not feasible, the sample can be shaken initially and every 20 min for a 2-h period. The result will not be significantly different than for a static overnight absorption period, provided that the oxygen concentration in the flask is greater than 1 %.

11. Calibration

11.1 *Sample Collection Flask Volume*—Fill the sample flask and stopcock assembly with water up to the stopcock plug. Determine the volume to ±10 ml by measuring either the volume or weight of the water contained in

Copyright ASME International
Provided by IHS under license with ASME
No reproduction or networking permitted without license from IHS
– Not for Resale

the assembly. Number and record the volume on the flask.

11.2 *Spectrophotometer Calibration*—Prepare a calibration curve to cover a range from about 0 to 125 ppm NO_2, based on 2000-ml samples of dry gas at 21°C (70°F) and 101.33 kPa (760 torr 29.92 in. Hg). Using a microburet or pipets, transfer 0.0, 1.0, 2.0, 3.0, 4.0, and 5.0 ml of the working standard KNO_3 solution (1 ml = 100 μg NO_2) into the 200-ml evaporating dishes and add 25.0 ml of absorbing solution to each. Proceed in accordance with 12.3 to 12.5. Construct a calibration curve by plotting the absorbancies of the solutions at 405 nm against the micrograms of NO_2.

NOTE 6—Higher sample concentrations may be analyzed using this curve by taking smaller aliquots of the absorbing solution or by dilution, or both, of the color-developed solution before reading in the spectrophotometer.

12. Procedure

12.1 After the absorption period is completed, record the barometric pressure and the room temperature where the sample has stood. Connect one arm of the sample flask stopcock to the open-end manometer, turn the stopcock to open the flask to the manometer, and read the difference between the mercury levels in the manometer. The absolute internal pressure in the flask is then the barometric pressure less this difference. Correct the gas volume in the flask as directed in 13.1.

12.2 Transfer the absorbing solution quantitatively from the flask into a 200-ml evaporating dish (Note 7). Pipet 25.0 ml of unused absorbing solution into another evaporating dish for a blank and add the same amount of water to this dish as was used in transferring the sample. Proceed with the blank in the same manner as directed for the sample.

NOTE 7—If the sample is expected to have a high concentration of oxides of nitrogen, transfer it to a 50-ml volumetric flask instead of the evaporating dish, and dilute to the mark with water. Select a suitable aliquot and pipet it into a 200-ml evaporating dish. Likewise dilute 25.0 ml of unused absorbing solution to 50 ml and pipet an aliquot equal to that of the sample into a 200-ml evaporating dish for a blank.

NOTE 8—To save time a 15-ml aliquot of the used absorbing solution may be pipetted into the evaporating dish, rather than quantitatively transferring the whole solution. This is permissible if the concentration of nitrogen dioxide (NO_2) is greater than 10 ppm, and if the evacuation of the flask prior to admitting the sample was to the incipient or flash boiling point of the unused absorbing solution. Evacuation up to 1 min after flash boiling appears to result in about 1 % decrease in the volume of the solution.

NOTE 9—If necessary, in order to immediately reuse the sampling flask or to ship the used absorbing solution back to a laboratory for analysis, the entire used absorbing solution or a 15-ml aliquot may be quantitatively transferred to a leak-free glass or polyethylene bottle until ready for analysis.

12.3 Add NaOH solution to the sample solution to the evaporating dish and to the blank until each is just basic to litmus or pH paper. Do not add any excess NaOH **(7)**. Evaporate each to dryness on the water bath and allow to cool. Very carefully add 2 ml of phenol disulfonic acid solution to each residue and triturate thoroughly with a polyethylene rod to ensure complete contact of the residue with the solution. Add 1 ml of water and 4 drops of H_2SO_4 (sp gr 1.84) to each and heat on the water bath for 3 min with occasional stirring. Allow the mixture to cool, add 10 ml of water to each, and mix well by stirring. Add 15 ml of fresh, cool NH_4OH dropwise to each, with constant stirring. Test with litmus paper to make sure an excess of the NH_4OH is present.

12.4 Filter the solutions through 7-cm, rapid, medium-texture filter papers (Note 10) into 50-ml volumetric flasks. Wash the evaporating dishes three times with 4 to 5 ml of water and pass the washing through the filters. Make up the volumes of the solutions to 50 ml with water and mix thoroughly.

NOTE 10—Reference **(7)** recommends discarding any sample for which a significant precipitate is present or the evaporating dish is visually etched. However, the need for this has not been demonstrated. The same grade filter paper should, however, be used both in preparing the calibration curves and in running the samples. It has been found that some yellow color is retained on the paper when filtering more concentrated samples and this factor must be taken into account by use of the sample type of filter paper throughout, or by continued washing until no color is retained in any case. Alternatively, the ammoniacal solutions may be centrifuged, instead of filtered, after dilution to 50 ml.

12.5 Read the absorbance of the sample solution against the blank in suitable equipment for measurement at 405 nm. If the absorbance falls beyond the range of calibration, thinner cells may be used or a suitable aliquot selected. Dilute the aliquot and the blank to the same volume and read the absorbance of the sample aliquot against that of the blank aliquot.

12.6 Convert the photometric readings to micrograms of NO_2 by means of the calibration curves.

NOTE 10—The calibration curves must not be assumed to be usable over any protracted length of time. One or more standards should be run along with the samples each time a set is run, or at least every few days if samples are being run daily.

13. Calculations

13.1 *Gas Sample Volume Correction*—Correct the volume of the dry gas sample (after removal of absorbed constituents) to 21°C (70°F) and 101.33 kPa (760 torr or 29.92 in. Hg).

Copyright ASME International
Provided by IHS under license with ASME
No reproduction or networking permitted without license from IHS

Not for Resale

13.1.1 Calculate the volume of gas sample as follows:

$$V_c = (V_f - V_a)(P_f/T_f - P_i/T_i)(21 + 273.2)/101.33$$

where:

V_c = corrected volume of sample gas, ml,
V_f = volume of sample collection flask, ml,
V_a = volume of absorbing solution used, 25 ml,
P_i = initial absolute pressure in flask prior to sampling, kPa,
P_f = final absolute pressure in flask after absorption period, kPa,
T_i = initial absolute temperature of flask prior to sampling, K (°C + 273.2), and,
T_f = final absolute temperature of flask after absorption period, K (°C + 273.2).

13.2 Calculate the concentration of NO_2 in parts per million by volume (ppm), dry basis, as follows:

$$NO_2, \text{ ppm} = (24.1\ W \times 10^3)/46V_c$$

where:

V_c = corrected volume of sample gas, ml,
W = weight of NO_2 found in gas sample μg,
24.1×10^3 = standard molar gas volume at 21°C (70°F) and 101.33 kPa (760 torr or 29.92 in. Hg), ml, and
46 = formula weight of NO_2.

NOTE 10—Parts per million by volume of NO_2 may be converted to milligrams per cubic metre (mg/m^3) or to pounds per cubic foot (lb/ft^3) by multiplying by 1.91 and by 1.19×10^{-7}, respectively.

14. Precision and Accuracy (3,4,5)

14.1 In an ASTM-sponsored collaborative effort, laboratories, who had not worked under such conditions before, performed a series of pilot-plant tests indicating a correlation between the precision and the square root of the mean concentration of the NO_x over the range from 20 to 2000 ppm. The measures of precision used presented standard deviations for the components of variance between-laboratories (S_R) and within-laboratories (S_W) obtained from the analysis of variance technique. These correlations are shown in Fig. 2 **(5)**.

14.2 These same laboratories, working in the field at an oil-fired power plant and cement kiln showed a mean between-laboratory standard error of 14.5 ppm over NO_x concentrations in the range from 90 to 260 ppm. The mean between-laboratory standard error obtained from the field data is significantly lower than the comparable standard error measure calculated from the pilot plant work. Presumably, the increased experience of the operators contributed to the improved precision.

14.3 In order to use these data to determine the 95 % confidence limits (95 % CL) of the mean of n replicate analyses by a single laboratory, the mean level, m, is calculated and the appropriate value of S_W is found from Fig. 2. The 95 % CL of the mean is $m \pm (1.95/\sqrt{n}) \times S_W$.

14.4 The 95 % CL of the estimate that the mean of n replicate analysis by one laboratory represents the mean of a similar number of analyses by a large number of laboratories is calculated from the standard error, S_T, which in turn, can be calculated from the data in Fig. 2 using the equation:

$$S_T = \sqrt{(S_R^2 + S_W^2)/n}$$

If the experience of the laboratories with the method is appropriate and the NO_2 levels is used:

$$S_T = 14.5 \text{ ppm } NO_2$$

Finally, the 95% CL of a single laboratory's data with respect to a mean value determined by many laboratories is $\pm 1.96 \times S_T$.

14.5 In the same collaborative study it was shown that the method had no significant bias over the range studied. Thus, it can be stated that the accuracy of a single laboratory's analysis is $\pm 1.96 \times S_T$ from 20 to 2000 ppm of NO_2.

14.6 Analysis of standard nitrate solutions following each test indicated that variations introduced by the color formation and measurement portion of the method accounts for roughly 2/3 of the total observed variability. In addition, predominantly negative biases were associated with analysis of these standards ranging from −3.6 to −7.7 % of the true value. Although not statistically significant, the pilot plant spiking tests also produced a negative bias of −3.25 %, suggesting that there was an influence of a negative bias in the chemical portion of the method on the overall results.

14.7 Additional collaborative data concerning precision and accuracy of the phenol-disulfonic acid method, as applied in analysis of effluents by the EPA Method 7, are given in Refs **(3)** and **(4)**. Generally, these studies showed significantly better precision than indicated by Fig. 2 at NO_x concentrations lower than 400 ppm. The difference in findings may well represent differences in experience of the collaborating laboratories since the field data of the ASTM teams, which were obtained after the initial pilot plant work, was within the range of significance of the EPA correlations.

Copyright ASME International
Provided by IHS under license with ASME
No reproduction or networking permitted without license from IHS
Not for Resale

REFERENCES

(1) Beatty, R. L., Berger, L. B. and Schrenk, H. H., "Determinations of Oxides of Nitrogen by the Phenoldisulfonic Acid Method," Bureau of Mines, U. S. Dept. Interior, Rhode Island, February 1943, p. 3687.

(2) Boltz, D. F., *Colorimetric Determination of Nonmetals*, Interscience, New York, 1958.

(3) Hamil, H. F., and Camann, D. E., "Collaborative Study of Method for the Determination of Nitrogen Oxide Emissions from Stationary Sources (Fossil Fuel-Fired Steam Generators)," Southwest Research Institute report for Environmental Protection Agency, Oct. 5, 1973.

(4) Hamil, H. F., and Thomas, R. E., "Collaborative Study of Method for the Determination of Nitrogen Oxide Emissions from Stationary Sources (Nitric Acid Plants), "Southwest Research Institute Report for Environmental Protection Agency, May 8, 1974.

(5) Howes, J. E., Jr., Pesut, R. N., and Foster, J. F., "Interlaboratory Cooperative Study of the Precision and Accuracy of the Determination of Oxides of Nitrogen in Gaseous Combustion Products (Phenol-Disulfonic Acid Procedure)" Using ASTM Method D 1608-60, ASTM Data Series Publication DS 55 - S8, ASTM, Philadelphia, 1975.

(6) Martens, H. H., Dee, L. A., Nakamura, J. T., and Jaye, F. C., "Improved Phenol-Disulfonic Acid Method for Determination of NO_x from Stationary Sources," *Environmental Science Technology*, ESTHA, Vol 7, 1973, p. 1152.

(7) Robertson, D. J., Groth, R. H., Glastris, E. G., "Improvements in Phenoldisulfonic Acid Method for Determination of NO_x," *Environmental Science Technology*, ESTHA, Vol 9, 1975, p. 979.

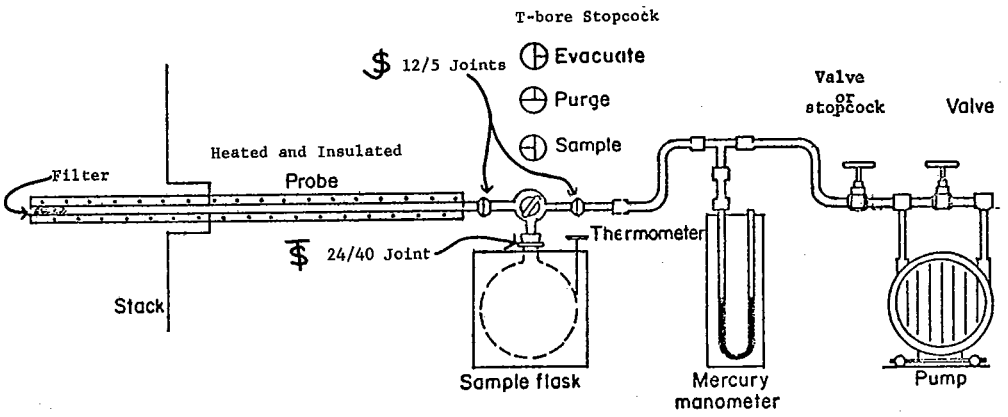

FIG 1 Diagram of Typical Sampling Apparatus used for Determination of Oxides of Nitrogen by ASTM D 1608.

Copyright ASME International
Provided by IHS under license with ASME
No reproduction or networking permitted without license from IHS
Not for Resale

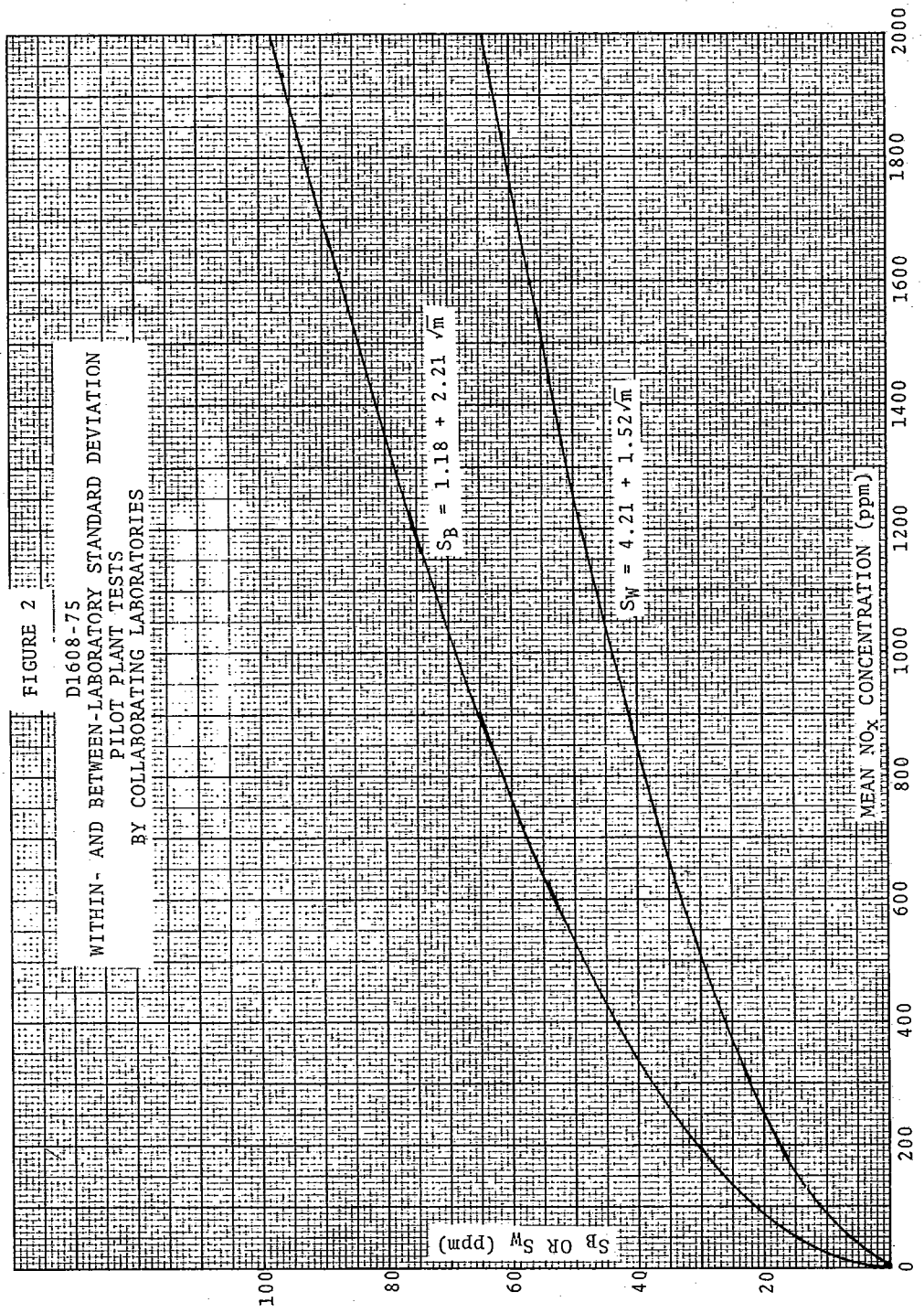

FIG 2 Within- and Between-Laboratory Standard Deviation Pilot Plant Tests by Collaborating Laboratories.

Copyright ASME International
Provided by IHS under license with ASME
No reproduction or networking permitted without license from IHS
Not for Resale

6.01.3

NITROGEN DIOXIDE IN AIR

Physical and Chemical Analysis Branch

Analytical Method

Analyte:	Nitrogen Dioxide	**Method No.:**	P&CAM 108
Matrix:	Air	**Range:**	.01 to 10 μg/liter
Procedure:	Colorimetric	**Precision:**	< 5% RSD
Date Issued:	12/11/72		
Date Revised:	January 10, 1974	**Classification:**	C (Tentative)

1. Principle of the Method

The nitrogen dioxide is absorbed in an azo dye forming reagent (Reference 1). A stable pink color is prcduced within 15 minutes which may be read visually or in an appropriate instrument at 550 nm.

2. Range and Sensitivity

2.1 This method is intended for the manual determination of nitrogen dioxide in the atmosphere in the range of 0.005 to about 5 parts per million (ppm) by volume or 0.01 to 10 μg/liter, when sampling is conducted in fritted bubblers. The method is preferred when high sensitivity is needed.

2.2 Concentrations of 5 to 100 ppm in industrial atmospheres and in gas burner stacks also may be sampled by employing evacuated bottles or glass syringes. For higher concentrations, for automotive exhaust, and/or for samples relatively high in sulfur dioxide content, other methods should be applied.*

3. Interferences

3.1 A tenfold ratio of sulfur dioxide to nitrogen dioxide produces no effect. A 30-fold ratio slowly bleaches the color to a slight extent. The addition of 1 percent acetone to the reagent before use retards the fading by forming another temporary product with sulfur dioxide. This permits reading within 4 to 5 hours (instead of the 45 minutes required when acetone is not added) without appreciable interferences. Interference from sulfur dioxide may be a problem in some stack gas samples (Section 2.2).

* NOTE: To measure total NO and NO_2. An oxidizing tube must be used to oxidize any NO to NO_2 prior to analysis. At least 3 passes through KGO_3 solution is required.

Reprinted from N10SH Manual of Analytical Methods, Second Edition, U.S. Department of Health, Education, and Welfare, 1977.

Copyright ASME International
Provided by IHS under license with ASME
No reproduction or networking permitted without license from IHS
Not for Resale

3.2 A fivefold ratio of ozone to nitrogen dioxide will cause a small interference, the maximal effect occurring in 3 hours. The reagent assumes a slightly orange tint.

3.3 Peroxyacylnitrate (PAN) can give a response of approximately 15 to 35 percent of an equivalent molar concentration of nitrogen dioxide (Reference 2). In ordinary ambient air the concentrations of PAN are too low to cause any significant error.

3.4 The interferences from other nitrogen oxides and other gases which might be found in polluted air are negligible. However, if the evacuated bottle or syringe method is used to sample concentrations above 5 ppm, interference from NO (due to oxidation to NO_2) is possible (Section 8.2.3).

3.5 If strong oxidizing or reducing agents are present, the colors should be determined within 1 hour, if possible, to minimize any loss.

4. Precision and Accuracy

4.1 A precision of 1 percent of the mean can be achieved with careful work (Reference 3); the limiting factors are the measurements of the volume of the sample and of the absorbance of the color.

4.2 At present, accuracy data are not available.

5. Advantages and Disadvantages of the Method

This is a simple method with direct coloration of absorbing reagent, which can be put directly into cuvettes and read, or diluted with absorbing reagent and read.

6. Apparatus

6.1 **Absorber.** The sample is absorbed in an all-glass bubbler with a 60 μ maximum pore diameter frit.

6.1.1 The porosity of the fritted bubbler, as well as the sampling flow rate, affect absorption efficiency. An efficiency of over 95 percent may be expected with a flow rate of 0.4 liter/minute or less and a maximum pore diameter of 60 μ. Frits having a maximum pore diameter less than 60 μ will have a higher efficiency but will require an inconvenient pressure drop for sampling (see formula in Section 6.1.2). Considerably lower efficiencies are obtained with coarser frits, but these may be utilized if the flow rate is reduced.

Copyright ASME International
Provided by IHS under license with ASME
No reproduction or networking permitted without license from IHS
Not for Resale

6.1.2 Since the quality control by some manufacturers is rather poor, it is desirable to measure periodically the porosity of an absorber as follows: Carefully clean the apparatus with dichromate-concentrated sulfuric acid solution and then rinse it thoroughly with distilled water. Assemble the bubbler, add sufficient distilled water to barely cover the fritted portion, and measure the vacuum required to draw the first perceptible stream of air bubbles through the frit. Then calculate the maximum pore diameter as follows:

$$\text{Maximum pore diameter } (\mu) = \frac{30\ s}{P}$$

where:

s = surface tension of water at the test temperature in dynes/cm (73 at 18°C, 72 at 25°C, and 71 at 31°C),

P = measured vacuum, mm Hg.

6.1.3 Rinse the bubbler thoroughly with water and allow to dry before using. A rinsed and reproducibly drained bubbler may be used if the volume (r) of retained water is added to that of the absorbing reagent for the calculation of results. This correction may be determined as follows: Pipet into a drained bubbler exactly 10 mℓ of a colored solution (such as previously exposed absorbing reagent) of absorbance A_1. Assemble the bubbler and rotate to rinse the inside with the solution. Rinse the fritted portion by pumping gently with a rubber bulb. Read the new absorbance, A_2, of the solution. Then:

$$10A_1 = (10 + r)\,A_2$$

or:

$$r = 10\frac{A_1}{A_2} - 1$$

6.2 **Air Metering Device.** A glass rotameter capable of accurately measuring a flow of 0.4 liter/minute is suitable. A wet test meter is convenient to check the calibration.

6.3 **Sampling Probe.** A glass or stainless steel tube 6 to 10 mm in diameter provided with a downward-facing intake (funnel or tip) is suitable. A small loosely fitting plug of glass wool may be inserted, when desirable, in the probe to exclude water droplets and particulate matter. The dead volume of the system should be kept minimal to permit rapid flushing during sampling to avoid losses of nitrogen dioxide on the surfaces.

Copyright ASME International
Provided by IHS under license with ASME
No reproduction or networking permitted without license from IHS
Not for Resale

6.4 **Grab-Sample Bottles.** Ordinary glass-stoppered borosilicate glass bottles of 30 to 250 mℓ sizes are suitable if provided with a mating ground joint attached to a stopcock for evacuation. Calibrate the volume by weighing with connecting piece, first empty, then filled to the stopcock with distilled water.

6.5 **Glass Syringes.** 50 or 100 mℓ syringes are convenient (although less accurate than bottles) for sampling.

6.6 **Air Pump.** A vacuum pump capable of drawing the required sample flow for intervals of up to 30 minutes is suitable. A tee connection at the intake is desirable. The inlet connected to the sampling train should have an appropriate trap and needle valve, preferably of stainless steel. The second inlet should have a valve for bleeding in a large excess flow of clean air to prevent condensation of acetic acid vapors from the absorbing reagent, with consequent corrosion of the pump. Alternatively, soda lime may be used in the trap. A filter and critical orifice may be substituted for the needle valve (Reference 4).

6.7 **Spectrophotometer or Colorimeter.** A laboratory instrument suitable for measuring the pink color at 550 nm, with stoppered tubes or cuvettes. The wavelength band width is not critical for this determination.

6.8 Assorted laboratory glassware.

7. Reagents

All chemicals used should be analytical reagent grade (Reference 5).

7.1 **Nitrite-Free Water.** All solutions are made in nitrite-free water. If available distilled or deionized water contains nitrite impurities (produces a pink color when added to absorbing reagent), redistill it in an all-glass still after adding a crystal each of potassium permanganate and of barium hydroxide.

7.2 **N-(1-Naphthyl) -Ethylenediamine Dihydrochloride, Stock Solution (0.1%).** Dissolve 0.1 g of the reagent in 100 mℓ of water. Solution is stable for several months if kept well stoppered in a brown bottle in the refrigerator. (Alternatively, weighed small amounts of the solid reagent may be stored.)

7.3 **Absorbing Reagent.** Dissolve 5 g of anhydrous sulfanilic acid (or 5.5 g of $NH_2C_6H_4SO_3H \cdot H_2O$) in almost a liter of water containing 140 mℓ of glacial acetic acid. Gentle heating is permissible to speed up the process. To the cooled mixture, add 20 mℓ of the 0.1% stock solution of N-(1-naphthyl) -ethylenediamine dihydrochloride, and dilute to 1 liter. Avoid lengthy contact with air during both preparation and use, since discoloration of reagent will result because of absorption of nitrogen dioxide. The solution is stable for several months if kept

Copyright ASME International
Provided by IHS under license with ASME
No reproduction or networking permitted without license from IHS
Not for Resale

well-stoppered in a brown bottle in the refrigerator. The absorbing reagent should be allowed to warm to room temperature before use.

7.4 **Standard Sodium Nitrite Solution** (0.0203 g/liter). One mℓ of this working solution of sodium nitrite ($NaNO_2$) produces a color equivalent to that of 10 $\mu\ell$ of nitrogen dioxide (10 ppm in 1 liter of air at 760 mm of mercury and 25°C: see Section 10.2.1). Prepare fresh just before use by dilution from a stronger stock solution containing 2.03 g of the reagent grade granular solid (calculated as 100 percent) per liter. It is desirable to assay (Reference 5), the solid reagent, especially if it is old. The stock solution is stable for 90 days at room temperature, and for a year in a brown bottle under refrigeration.

8. Procedure

8.1 **Cleaning of Glassware.** All washed glassware should be allowed to stand awhile in chromic acid solution, and then thoroughly rinsed with single and then double distilled water.

8.2 **Collection and Storage of Samples.** Three methods are described below. Concentrations below 5 ppm are sampled by the bubbler method. Higher concentrations may be sampled by the evacuated bottle method, or more conveniently (but less accurately) by the glass syringe method. The latter method is more useful when appreciable concentrations (e.g., 20 ppm) of nitric oxide are expected.

8.2.1 Bubbler Method

1. Assemble, *in order*, a sampling probe (optional), a glass rotameter, fritted absorber, and pump. Use ground-glass connections upstream from the absorber. Butt-to-butt glass connections with slightly greased vinyl or pure gum rubber tubing also may be used for connections without losses if lengths are kept minimal. The sampling rotameter may be used upstream from the bubbler provided occasional checks are made to show that no nitrogen dioxide is lost. The rotameter must be kept free from spray or dust.

2. Pipet 10.0 mℓ of absorbing reagent into a dry fritted bubbler (Section 6.1.3).

3. Draw an air sample through it at the rate of 0.4 liter/minute (or less) long enough to develop sufficient final color (about 10 to 30 minutes). Note the total volume of air sampled.

4. Measure and record the sample air temperature and pressure.

Copyright ASME International
Provided by IHS under license with ASME
No reproduction or networking permitted without license from IHS
Not for Resale

8.2.2 Evacuated Bottle Method

1. Sample in bottles of appropriate size containing 10.0 mℓ (or other convenient volume) of absorbing reagent. For 1 cm spectrophotometer cells, a 5:1 ratio of air sample volume to reagent volume will cover a concentration range up to 100 ppm; a 25:1 ratio suffices to measure down to 2 ppm.

2. Wrap a wire screen or glass-fiber-reinforced tape around the bottle for safety purposes.

3. Grease the joint lightly with silicone or fluorocarbon grease.

4. If a source of vacuum is available at the place of sampling, it is best to evacuate just before sampling to eliminate any uncertainty about loss of vacuum. A three-way Y stopcock connection is convenient. Connect one leg to the sample source, one to the vacuum pump, and the third to a tee attached to the bottle and to a mercury manometer or accurate gauge. In the first position of the Y stopcock, the bottle is evacuated to the vapor pressure of the absorbing reagent. In the second position of the Y stopcock the vacuum pump draws air through the sampling line to flush it thoroughly. The actual vacuum in the sample bottle is read on the manometer. In the third position of the Y stopcock the sampling line is connected to the evacuated bottle and the sample is collected.

5. The stopcock on the bottle is then closed. Allow 15 minutes with occasional shaking for complete absorption and color development.

6. For calculation of the standard volume of the sample, record the temperature and the pressure. The pressure is the difference between the filled and evacuated conditions. The uncorrected volume is that of the bottle plus that of the connection up to the stopcock minus the volume of absorbing reagent.

8.2.3 Glass Syringe Method

1. Ten mℓ of absorbing reagent is kept in a capped 50 (or 100) mℓ glass syringe, and 40 (or 90) mℓ of air is drawn in at the time of sampling.

2. The absorption of nitrogen dioxide is completed by capping and shaking vigorously for 1 minute, after which the air is expelled. (When appreciable concentrations -- e.g., 20 ppm – of nitric oxide are suspected, interference caused by the oxidation of nitric oxide to nitrogen dioxide is minimized by expelling the air sample immediately after the absorption period.)

Copyright ASME International
Provided by IHS under license with ASME
No reproduction or networking permitted without license from IHS
Not for Resale

3. Additional air may be drawn in and the process repeated several times, if necessary, to develop sufficient final color.

8.2.4 **Effects of Storage.** Colors may be preserved, if well stoppered, with only 3 to 4% loss in absorbance per day; however, if strong oxidizing or reducing gases are present in the sample in concentrations considerably exceeding that of the nitrogen dioxide, the colors should be determined as soon as possible to minimize any loss. (See Section 3 for effects of interfering gases.)

8.3 Analysis of Samples

8.3.1 After collection or absorption of the sample, a red-violet color appears. Color development is complete within 15 minutes at room temperature.

8.3.2 Compare with standards visually or transfer to stoppered cuvettes and read in a spectrophotometer at 550 mμ, using unexposed reagent as a reference. Alternatively, distilled water may be used as a reference and the absorbance of the reagent blank deducted from that of the sample.

8.3.3 Colors too dark to read may be quantitatively diluted with unexposed absorbing reagent. The measured absorbance is then multiplied by the dilution factor.

9. Calibration and Standardization

Either of two methods of calibration may be employed. The most convenient is standardizing with nitrite solution. Greater accuracy is achieved by standardizing with accurately known gas samples in a precision flow dilution system (References 3,6,7). The recently developed permeation tube technique (Reference 8) appears promising. If the gaseous method is used, the stoichiometric factor is eliminated from the calculations. Concentrations of the standards should cover the expected range of sample concentrations.

9.1 Nitrite Solution Method

9.1.1 Add graduated amounts of the $NaNO_2$ solution up to 1 mℓ (measured accurately in a graduated pipet or small buret) to a series of 25 mℓ volumetric flasks, and dilute to the mark with absorbing reagent.

9.1.2 Mix, allow 15 minutes for complete color development and read the colors (Section 8.3).

Copyright ASME International
Provided by IHS under license with ASME
No reproduction or networking permitted without license from IHS
Not for Resale

9.1.3 Good results can be obtained with these small volumes of standard solution if they are carefully measured. Making the calibration solutions up to 25 mℓ total volume, rather than the 10 mℓ volume used for samples, facilitates accuracy. If preferred, even larger volumes may be used with correspondingly larger volumetric flasks.

9.1.4 Plot the absorbances of the standard colors against the μℓ of nitrogen dioxide per mℓ of absorbing reagent. The latter values are equal to the corresponding mℓ of standard nitrite solution times 0.4 (Section 10.2.2). If preferred, transmittance may be plotted instead of absorbance, using semilogarithmic graph paper. The plot follows Beer's law. Draw the straight line through the origin giving the best fit, and determine the slope, K, which is μℓ of NO_2 intercepted at absorbance of exactly 1.0 or at 10 percent transmittance. For 1 cm cells, the value of K is about 0.73.

9.2 **Gaseous Standard Methods.** Two techniques are outlined below. Consult the original references for complete details, and Section 10.3 for calculations.

9.2.1 Method 1 (Reference 3) for gaseous standardization is as follows:

1. About 5 mℓ of pure liquid nitrogen dioxide is placed in a small glass bubbler (10 mm in diameter and 100 mm in length) provided with ground glass stopcocks and spherical joints on both intake and outlet tubes.

2. The bubbler is immersed in a thermos bottle ice bath and connected to an air line. A small pump with flowmeter delivers a steady stream of a few mℓ/min of air to the bubbler, thence through two flowmeters which permit the discarding of up to 90 percent of the NO_2 and finally to a large stream of carbon filtered air (1000 to 1500 liters/min) from a small blower. All this air passes through a 10 cm Biram anemometer mounted on the end of a pipe 10 cm in diameter. It has been found empirically with this arrangement that the anemometer reading in ft/min times 1.64 is equivalent to liters/min.

3. The bubbler is weighed to 0.1 mg at the beginning and end of an accurately measured time period. The stopcocks are closed each time before the bubbler is removed from the ice bath and wiped dry for weighing.

9.2.2 Method 2 (References 6,7) for preparing known dilutions of nitrogen dioxide consists in making a preliminary dilution (about 0.4%) of nitrogen dioxide in air in a stainless steel tank at 1000 lbs pressure. Subsequent dilution, by air in a flow system at atmospheric pressure, of the analyzed

Copyright ASME International
Provided by IHS under license with ASME
No reproduction or networking permitted without license from IHS
Not for Resale

tank mixture controlled by an asbestos plug and manometer yields concentrations of 0.1 to 10 ppm NO_2

9.2.3 Sample the gas mixtures by the bubbler method (Section 8.2.1), and read the colors (Section 8.3). Select concentrations and sample volumes to produce colors covering the accurate absorbance range of the spectrophotometer.

9.2.4 Standardization by gaseous samples can be based either upon a weight-volume relationship if the source of nitrogen dioxide is weighed, or a volume-volume relationship if the source is an analyzed tank mixture.

9.2.5 Calculate the concentration of the sample air stream, C, in ppm by volume ($\mu\ell$ NO_2/ℓ of air).

$$C = \frac{10^6\ (W_1 - W_2)}{t} \times \frac{0.532}{F_1} \times \frac{F_2}{F_3}$$

or: $$C = C_t \times \frac{F_2}{F_3}$$

where:

C = concentration of sample air stream in ppm.

$(W_1 - W_2)$ = difference between initial and final weights, in grams, of nitrogen dioxide bubbler (or of permeation tube); weight loss is usually 0.01 to 0.05 g.

t = time interval in minutes, between the weighings.

0.532 = (24.47/46.0), ideal volume in ℓ at 25°C and 760 mm Hg of 1.0 g of nitrogen dioxide.

F_1 = flow rate, in ℓpm, of air passed through nitrogen dioxide bubbler (or over permeation tube), corrected to 25°C and 760 mm Hg.

F_2 = flow rate, in ℓpm, of concentrated gas mixture injected into sample air stream.

F_3 = total flow rate, in ℓpm, of sample air stream

C_t = analyzed concentration of the tank mixture, in ppm by volume on an ideal gas basis.

9.2.6 For each standard color, calculate the $\mu\ell$ of nitrogen dioxide/mℓ of absorbing reagent:

Copyright ASME International
Provided by IHS under license with ASME
No reproduction or networking permitted without license from IHS

Not for Resale

$$\mu\ell\ NO_2/m\ell = C\ V$$

where:

C = ppm concentration (Section 9.2.5)

V = volume of air sample at 25°C and 760 mm Hg, in ℓ/mℓ of absorbing reagent.

9.2.7 Plot the absorbances of the colors against the μℓ of gaseous nitrogen dioxide/mℓ of absorbing reagent. Draw the straight line through the origin giving the best fit, and determine the slope, K (the value of μℓ/mℓ intercepted at absorbance of exactly 1.0).

10. Calculations

10.1 For convenience, standard conditions are taken as 760 mm Hg and 25°C, at which the molar gas volume is 24.47 liters. (This is identical with standard conditions for Threshold Limit Values of the American Conference of Governmental Industrial Hygienists; it is very close to the standard conditions used (Reference 9) for air-handling equipment, of 29.92 in. Hg, 70°F, and 50 percent relative humidity, at which the molar gas volume is 24.76 liters, of 1.2 percent greater.)

Ordinarily the correction of the sample volume to these standard conditions is slight and may be omitted; however, for greater accuracy, it may be made by means of the perfect gas equation.

10.2 Standardization by nitrite solution is based upon the empirical observation (References 1,6) that 0.72 mole of sodium nitrite produces the same color as 1 mole of nitrogen dioxide.

10.2.1 This factor is applied to calculate the equivalence of the nitrite solution to the volume of NO_2 absorbed as follows: One mℓ of the working standard solution contains 2.03×10^{-5} g $NaNO_2$. Since the molecular weight of $NaNO_2$ is 69.00, this is equivalent to:

$$\frac{2.03 \times 10^{-5}}{69.00} \times \frac{24.47}{0.72} = 1 \times 10^{-5}\ \ell \text{ of } NO_2, \text{ or}$$

$$= 10\ \mu\ell \text{ of } NO_2$$

10.2.2 In Section 9.1, the calibration standard containing 1 mℓ of nitrite solution (10 μℓ NO_2) per 25 mℓ total volume is equivalent to 10/25 or 0.4 μℓ of NO_2 per mℓ.

Copyright ASME International
Provided by IHS under license with ASME
No reproduction or networking permitted without license from IHS
Not for Resale

10.3 Compute the concentration of nitrogen dioxide in the sample as follows:

$$\text{Nitrogen dioxide, ppm} = AK/V$$

where:

A = measured absorbance

K = standardization factor from Section 9.1.4 or 9.2.7

V = volume of air sample, at 25°C and 760 mm Hg, in liters/mℓ of absorbing reagent.

10.4 If preferred, the graph from Section 9.1.4 or 9.2.7 may be used instead as follows:

$$\text{Nitrogen dioxide, ppm} = \mu\ell\ NO_2 \text{ per } m\ell/V$$

10.4.1 If V is a simple multiple of K, calculations are simplified. Thus, for the K value of 0.73 previously cited, if exactly 7.3 liters of air are sampled through a bubbler containing 10 mℓ of absorbing reagent, K/V = 1, and the absorbance is also ppm directly.

10.4.2 For exact work, an allowance may be made in the calculations for sampling efficiency and for fading of the color using the following equation:

$$\text{Nitrogen dioxide, ppm} = A_c K/VE$$

where:

A_c = corrected absorbance; the absorbance is corrected for fading of the color as indicated in Section 8.2.4 when there is a prolonged interval between sampling and measurement of the absorbance.

E = sampling efficiency; for a bubbler, E is estimated from prior tests using two absorbers in series (Reference 7 and Section 6.1.1); for a bottle or syringe, E = 1.0.

11. References

1. Saltzman, B.E., "Colorimetric Microdetermination of Nitrogen Dioxide in the Atmosphere," Analytical Chemistry, 26, 1449-1955 (1954).

2. Mueller, P.K., F.P. Terraglio, and Y. Tokiwa, "Chemical Interferences in Continuous Air Analyzers," Presented 7th Conference on Methods in Air Pollution Studies, Los Angeles, California, January 1965.

Copyright ASME International
Provided by IHS under license with ASME
No reproduction or networking permitted without license from IHS
Not for Resale

3. Thomas, M.D., and R.E. Amtower, "Gas Dilution Apparatus for Preparing Reproducible Dynamic Gas Mixtures in Any Desired Concentration and Complexity," J. Air Pollut. Contr. Assoc., 16, 618-623 (1966).

4. Lodge, J.P., Jr., J.B. Pate, B.E. Ammons, and G.A. Swanson, "The Use of Hypodermic Needles as Critical Orifices in Air Sampling," J. Air Pollut. Contr. Assoc., 16, 197-200 (1966).

5. American Chemical Society, *Reagent Chemicals,* American Chemical Society Specifications, Washington, D.C., 1966.

6. Saltzman, B.E., and A.F. Wartburg, Jr., "Precision Flow Dilution System for Standard Low Concentrations of Nitrogen Dioxide," Analytical Chemistry, 37, 1261-1262 (1965).

7. Saltzman, B.E., "Preparation and Analysis of Calibrated Low Concentrations of Sixteen Toxic Gases," Analytical Chemistry, 33, 1103-1104 (1961).

8. O'Keefe, A.E., and G.C. Ortman, "Primary Standards for Trace Gas Analysis," Analytical Chemistry, 38, 760-763 (1966).

9. ASTM Committee D-22, "Terms Relating to Atmospheric Sampling and Analysis," D 1356-60, *ASTM Standards on Methods of Atmospheric Sampling and Analysis,* 2nd ed., Philadelphia, Pa., 1962.

10. Stratmann, H., and M. Buck, "Messung von Stickstoffdioxid in der Atmosphere," Air and Water Pollut. Int. J., 10, 313-326 (1966).

11. Stratmann, H., Personal Communication, September 1966.

12. Shaw, J.T., "The Measurement of Nitrogen Dioxide in the Air," Atmospheric Environment, 1, 81-85 (1967).

13. 42602-01-68T (Greis-Saltzman Reaction), "Tentative Method of Analysis for Nitrogen Dioxide Content of the Atmosphere," *Methods of Air Sampling and Analysis,* APHA, Inc., Washington, D.C., 1972.

Copyright ASME International
Provided by IHS under license with ASME
No reproduction or networking permitted without license from IHS

Not for Resale

6.01.4

FEDERAL EPA METHOD

Determination of Sulfur Dioxide Emmissions from Stationary Sources

1. Principle and Applicability

1.1 **Principle.** A gas sample is extracted from the sampling point in the stack. The sulfuric acid mist (including sulfur trioxide) and the sulfur dioxide are separated. The sulfur dioxide fraction is measured by the barium-thorin titration method.

1.2 **Applicability.** This method is applicable for the determination of sulfur dioxide emissions from stationary sources. The minimum detectable limit of the method has been determined to be 3.4 milligrams (mg) of SO_2/m^3 (2.12×10^{-7} lb/ft^3). Although no upper limit has been established, tests have shown that concentrations as high as 80,000 mg/m^3 of SO_2 can be collected efficiently in two midget impingers, each containing 15 milliliters of 3 percent hydrogen peroxide, at a rate of 1.0 lpm for 20 minutes. Based on theoretical calculations, the upper concentration limit in a 20-liter sample is about 93,300 mg/m^3.

Possible interferents are free ammonia, water-soluble cations, and fluorides. The cations and fluorides are removed by glass wool filters and an isopropanol bubbler, and hence do not affect the SO_2 analysis. When samples are being taken from a gas stream with high concentrations of very fine metallic fumes (such as inlets to control devices), a high-efficiency glass fiber filter must be used in place of the glass wool plug (i.e., the one in the probe) to remove the cation interferents.

Free ammonia interferes by reacting with SO_2 to form particulate sulfite and by reacting with the indicator. If free ammonia is present (this can be determined by knowledge of the process and noticing white particulate matter in the probe and isopropanol bubbler), alternative methods, subject to the approval of the Administrator, U.S. Environmental Protection Agency, are required.

2. Apparatus

2.1 **Sampling.** The sampling train is shown in Fig. 6-1, and component parts are discussed below. The tester has the option of substituting sampling equipment described in Method 8 in place of the midget impinger equipment of Method 6. However, the Method 8 train must be modified to include a heated filter between the probe and isopropanol impinger, and the operation of the sampling train and sample analysis must be at the flow rates and solution volumes defined in Method 8.

The tester also has the option of determining SO_2 simultaneously with particulate matter and moisture determinations by (1) replacing the water in a Method 5 impinger system with 3 percent peroxide solution, or (2) by replacing the Method 5 water impinger system with a Method 8 isopropanol-filter-peroxide system. The analysis for SO_2 must be consistent with the procedure in Method 8.

2.1.1 **Probe.** Borosilicate glass, or stainless steel (other materials of construction may be used, subject to the approval of the Administrator), approximately 6-mm inside diameter, with a heating system to prevent water condensation and a filter (either in-stack or heated out-stack) to remove particulate matter, including sulfuric acid mist. A plug of glass wool is a satisfactory filter.

2.1.2 **Bubbler and Impingers.** One midget bubbler, with medium-coarse glass frit and borosilicate or quartz glass wool packed in top (see Fig. 6-1) to prevent sulfuric acid mist carryover, and three 30-ml midget impingers. The bubbler and midget impingers must be connected in series with leak-free glass connectors. Silicone grease may be used, if necessary, to prevent leakage.

At the option of the tester, a midget impinger may be used in place of the midget bubbler.

Other collection absorbers and flow rates may be used, but are subject to the approval of the Administrator. Also, collection efficiency must be shown to be at least 99 percent for each test run and must be documented in the report. If the efficiency is found to be acceptable after a series of three tests, further documentation is not required. To conduct the efficiency test, an extra absorber must be added and analyzed separately. This extra absorber must not contain more than 1 percent of the total SO_2.

2.1.3 **Glass Wool.** Borosilicate or quartz.

2.1.4 **Stopcock Grease.** Acetone-insoluble, heat-stable silicone grease may be used, if necessary.

2.1.5 **Temperature Gauge.** Dial thermometer, or equivalent, to measure temperature of gas leaving impinger train to within 1°C (2°F).

2.1.6 **Drying Tube.** Tube packed with 6- to 16-mesh indicating-type silica gel, or equivalent, to dry the

Copyright ASME International
Provided by IHS under license with ASME
No reproduction or networking permitted without license from IHS
Not for Resale

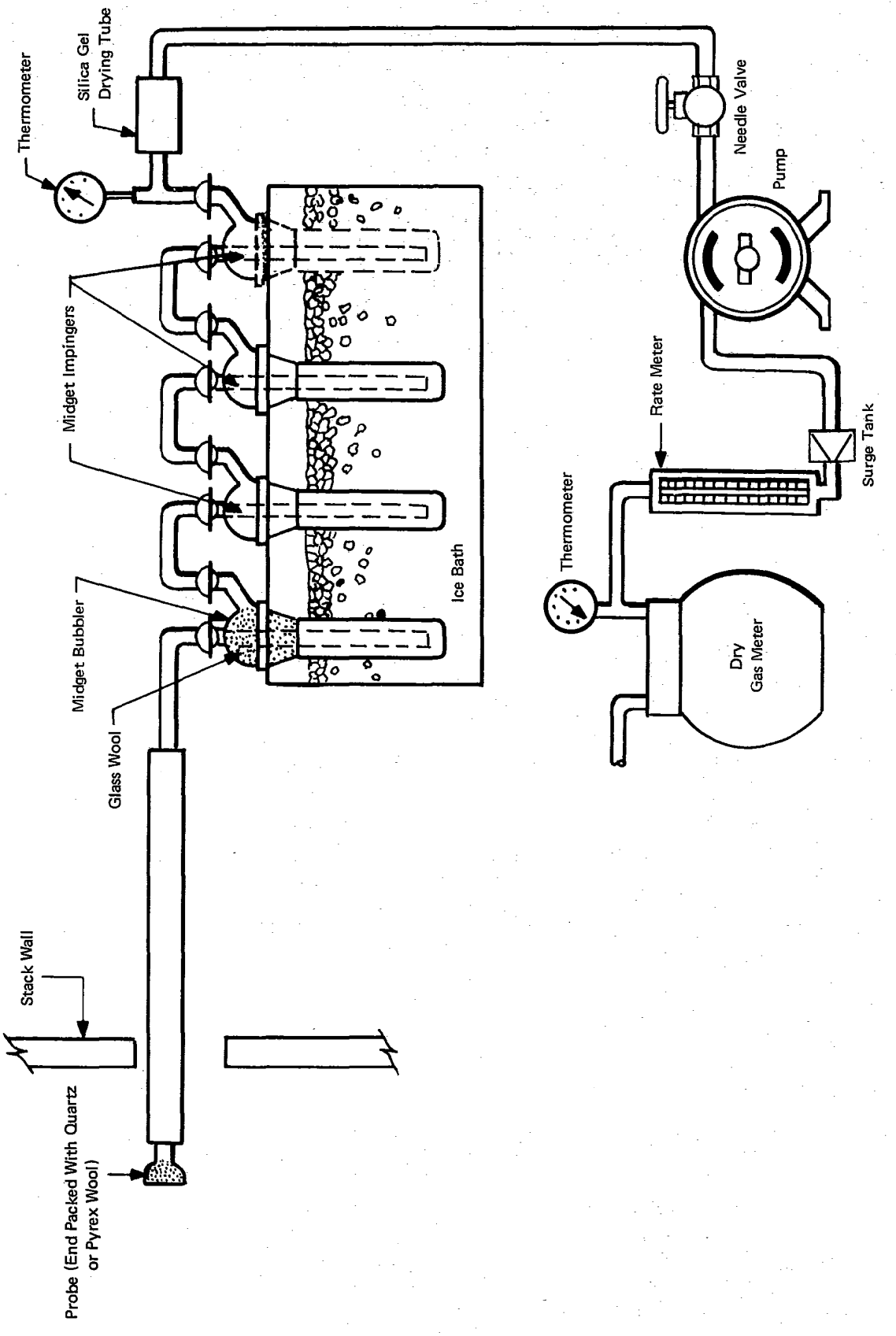

FIG. 6-1 SO_2 SAMPLING TRAIN

Not for Resale

Copyright ASME International
Provided by IHS under license with ASME
No reproduction or networking permitted without license from IHS

gas sample and to protect the meter and pump. If the silica gel has been used previously, dry at 175°C (350°F) for 2 hours. New silica gel may be used as received. Alternatively, other types of disiccants (equivalent or better) may be used, subject to approval of the Administrator.

2.1.7 **Valve.** Needle valve, to regulate sample gas flow rate.

2.1.8 **Pump.** Leak-free diaphragm pump, or equivalent, to pull gas through the train. Install a small surge tank between the pump and rate meter to eliminate the pulsation effect of the diaphragm pump on the rotameter.

2.1.9 **Rate Meter.** Rotameter, or equivalent, capable of measuring flow rate to within 2 percent of the selected flow rate of about 1000 cc/min.

2.1.10 **Volume Meter.** Dry gas meter, sufficiently accurate to measure the sample volume within 2 percent, calibrated at the selected flow rate and conditions actually encountered during sampling, and equipped with a temperature gauge (dial thermometer, or equivalent) capable of measuring temperature to within 3°C (5.4°F).

2.1.11 **Barometer.** Mercury, aneroid, or other barometer capable of measuring atmospheric pressure to within 2.5 mm Hg (0.1 in. Hg). In many cases, the barometric reading may be obtained from a nearby national weather service station, in which case the station value (which is the absolute barometric pressure) shall be requested and an adjustment for elevation differences between the weather station and sampling point shall be applied at a rate of minus 2.5 mm Hg (0.1 in. Hg) per 30 m (100 ft) elevation increase or vice versa for elevation decrease.

2.1.12 **Vacuum Gauge and Rotameter.** At least 760 mm Hg (30 in. Hg) gauge and 0-40 cc/min rotameter, to be used for leak check of the sampling train.

2.2 **Sample Recovery**

2.2.1 **Wash Bottles.** Polyethylene or glass, 500 ml, two.

2.2.2 **Storage Bottles.** Polyethylene, 100 ml, to store impinger samples (one per sample).

2.3 **Analysis**

2.3.1 **Pipettes.** Volumetric type, 5-ml, 20-ml (one per sample), and 25-ml sizes.

2.3.2 **Volumetric Flasks.** 100-ml size (one per sample) and 1000-ml size.

2.3.3 **Burettes.** 5- and 50-ml sizes.

2.3.4 **Erlenmeyer Flasks.** 250 ml-size (one for each sample, blank, and standard).

2.3.5 **Dropping Bottle.** 125-ml size, to add indicator.

2.3.6 **Graduated Cylinder.** 100-ml size.

2.3.7 **Spectrophotometer.** To measure absorbance at 352 nanometers.

3. Reagents

Unless otherwise indicated, all reagents must conform to the specifications established by the Committee on Analytical Reagents of the American Chemical Society. Where such specifications are not available, use the best available grade.

3.1 **Sampling.**

3.1.1 **Water.** Deionized, distilled to conform to ASTM Specification D 1193-74, Type 3. At the option of the analyst, the $kMnO_4$ test for oxidizable organic matter may be omitted when high concentrations of organic matter are not expected to be present.

3.1.2 **Isopropanol, 80 Percent.** Mix 80 ml of isopropanol with 20 ml of deionized, distilled water. Check each lot of isopropanol for peroxide impurities as follows: shake 10 ml of isopropanol with 10 ml of freshly prepared 10 percent potassium iodide solution. Prepare a blank by similarly treating 10 ml of distilled water. After 1 minute, read the absorbance at 352 nanometers on a spectrophotometer. (Note: Use a 1-cm path length.) If absorbance exceeds 0.1, reject alcohol for use.

Peroxides may be removed from isopropanol by redistilling or by passage through a column of activated alumina; however, reagent grade isopropanol with suitably low peroxide levels may be obtained from commercial sources. Rejection of contaminated lots may, therefore, be a more efficient procedure.

3.1.3 **Hydrogen Peroxide, 3 Percent.** Dilute 30 percent hydrogen peroxide 1:9 (v/v) with deionized, distilled water (30 ml is needed per sample). Prepare fresh daily.

3.1.4 **Potassium Iodide Solution, 10 Percent.** Dissolve 10.0 grams KI in deionized, distilled water and dilute to 100 ml. Prepare when needed.

3.2 **Sample Recovery**

3.2.1 **Water.** Deionized, distilled, as in 3.1.1.

3.2.2 **Isopropanol, 80 Percent.** Mix 80 ml of isopropanol with 20 ml of deionized, distilled water.

3.3 **Analysis**

3.3.1 **Water.** Deionized, distilled, as in 3.1.1.

3.3.2 **Isopropanol, 100 percent.**

3.3.3 **Thorin Indicator.** 1-(o-arsonophenylazo)-2-naphthol-3, 6-disulfonic acid, disodium salt, or equivalent. Dissolve 0.20 g in 100 ml of deionized, distilled water.

3.3.4 **Barium Perchlorate Solution, 0.0100 N.** Dissolve 1.95 g of barium perchlorate trihydrate [$Ba(ClO_4)_2 \cdot 3H_2O$] in 200 ml distilled water and dilute to 1 liter with isopropanol. Alternatively, 1.22 g of [$BaCl_2 \cdot 2H_2O$] may be used instead of the perchlorate. Standardize as in Section 5.5.

3.3.5 **Sulfuric Acid Standard, 0.0100 N.** Purchase or standardize to ± 0.0002 N against 0.0100 N NaOH

Copyright ASME International
Provided by IHS under license with ASME
No reproduction or networking permitted without license from IHS

Not for Resale

which has previously been standardized against potassium acid phthalate (primary standard grade).

4. Procedure

4.1 Sampling

4.1.1 **Preparation of Collection Train.** Measure 15 ml of 80 percent isopropanol into the midget bubbler and 15 ml of 3 percent hydrogen peroxide into each of the first two midget impingers. Leave the final midget impinger dry. Assemble the train as shown in Fig. 6-1. Adjust probe heater to a temperature sufficient to prevent water condensation. Place crushed ice and water around the impingers.

4.1.2 **Leak-Check Procedure.** A leak check prior to the sampling run is optional; however, a leak check after the sampling run is mandatory. The leak-check procedure is as follows:

Temporarily attach a suitable (e.g., 0-40 cc/min) rotameter to the outlet of the dry gas meter and place a vacuum gauge at or near the probe inlet. Plug the probe inlet, pull a vacuum of at least 25 mm Hg (10 in. Hg), and note the flow rate as indicated by the rotameter. A leakage rate not in excess of 2 percent of the average sampling rate is acceptable. Note: Carefully release the probe inlet plug before turning off the pump.

It is suggested (not mandatory) that the pump be leak-checked separately, either prior to or after the sampling run. If done prior to the sampling run, the pump leak-check shall precede the leak check of the sampling train described immediately above; if done after the sampling run, the pump leak-check shall follow the train leak-check. To leak check the pump, proceed as follows: Disconnect the dry tube from the probe-impinger assembly. Place a vacuum gauge at the inlet to either the drying tube or the pump, pull a vacuum of 250 mm (10 in.) Hg, plug or pinch off the outlet of the flowmeter and then turn off the pump. The vacuum should remain stable for at least 30 seconds.

Other leak-check procedures may be used, subject to the approval of the Administrator, U.S. Environmental Protection Agency.

4.1.3 **Sample Collection.** Record the initial dry gas meter reading and barometric pressure. To begin sampling, position the tip of the probe at the sampling point, connect the probe to the bubbler, and start the pump. Adjust the sample flow to a constant rate of approximately 1.0 liter/min as indicated by the rotameter. Maintain this constant rate (±10 percent) during the entire sampling run. Take readings (dry gas meter, temperatures at dry gas meter and at impinger outlet and rate meter) at least every 5 minutes. Add more ice during the run to keep the temperature of the gases leaving the last impinger at 20°C (68°F) or less. At the conclusion of each run, turn off the pump, remove probe from the stack, and record the final readings. Conduct a leak check as in Section 4.1.2. (This leak check is mandatory.) If a leak is found, void the test run or use procedures acceptable to the Administrator to adjust the sample volume for leakage. Drain the ice bath, and purge the remaining part of the train by drawing clean ambient air through the system for 15 minutes at the sampling rate.

Clean ambient air can be provided by passing air through a charcoal filter or through an extra midget impinger with 15 ml of 3 percent H_2O_2. The tester may opt to simply use ambient air, without purification.

4.2 **Sample Recovery.** Disconnect the impingers after purging. Discard the content of the midget bubbler. Pour the contents of the midget impingers into a leak-free polyethylene bottle for shipment. Rinse the three midget impingers and the connecting tubes with deionized, distilled water, and add the washings to the same storage container. Mark the fluid level. Seal and identify the sample container.

4.3 **Sample Analysis.** Note level of liquid in container, and confirm whether any sample was lost during shipment; note this on analytical data sheet. If a noticeable amount of leakage has occurred, either void the sample or use methods, subject to the approval of the Administrator, to correct the final results.

Transfer the contents of the storage container to a 100-ml volumetric flask and dilute to exactly 100 ml with deionized, distilled water. Pipette a 20-ml aliquot of this solution into a 250-ml Erlenmeyer flask, add 80 ml of 100 percent isopropanol and two to four drops of thorin indicator, and titrate to a pink endpoint using 0.0100 N barium perchlorate. Repeat and average the titration volumes. Run a blank with each series of samples. Replicate titrations must agree within 1 percent or 0.2 ml, whichever is larger.

(Note: Protect the 0.0100 N barium perchlorate solution from evaporation at all times.)

5. Calibration

5.1 Metering System

5.1.1 **Initial Calibration.** Before its initial use in the field, first leak check the metering system (drying tube, needle valve, pump, rotameter, and dry gas meter) as follows: place a vacuum gauge at the inlet to the drying tube and pull a vacuum of 250 mm (10 in.) Hg; plug or pinch off the outlet of the flowmeter, and then turn off the pump. The vacuum shall remain stable for at least 30 seconds. Carefully release the vacuum gauge before releasing the flowmeter end.

Copyright ASME International
Provided by IHS under license with ASME
No reproduction or networking permitted without license from IHS
Not for Resale

Next, calibrate the metering system (at the sampling flow rate specified by the method) as follows: connect an appropriately sized wet test meter (e.g., 1 liter per revolution) to the inlet of the drying tube. Make three independent calibration runs, using at least five revolutions of the dry gas meter per run. Calculate the calibration factor, Y (wet test meter calibration volume divided by the dry gas meter volume, both volumes adjusted to the same reference temperature and pressure), for each run, and average the results. If any Y value deviates by more than 2 percent from the average, the metering system is unacceptable for use. Otherwise, use the average as the calibration factor for subsequent test runs.

5.1.2 **Post-test Calibration Check.** After each field test series, conduct a calibration check as in Section 5.1.1 above, except for the following variations: (a) the leak check is not to be conducted, (b) three or more revolutions of the dry gas meter may be used, and (c) only two independent runs need be made. If the calibration factor does not deviate by more than 5 percent from the initial calibration factor (determined in Section 5.1.1), then the dry gas meter volumes obtained during the test series are acceptable. If the calibration factor deviates by more than 5 percent, recalibrate the metering system as in Section 5.1.1, and for the calculations, use the calibration factor (initial or recalibration) that yields the lower gas volume for each test run.

5.2 **Thermometers.** Calibrate against mercury-in-glass thermometers.

5.3 **Rotameter.** The rotameter need not be calibrated, but should be cleaned and maintained according to the manufacturer's instruction.

5.4 **Barometer.** Calibrate against a mercury barometer.

5.5 **Barium Perchlorate Solution.** Standardize the barium perchlorate solution against 25 ml of standard sulfuric acid to which 100 ml of 100 percent isopropanol has been added.

6. Calculations

Carry out calcualtions, retaining at least one extra decimal figure beyond that of the acquired data. Round off figures after final calculation.

6.1 **Nomenclature**

C_{SO_2} = concentration of sulfur dioxide, dry basis corrected to standard conditions, mg/dscm (lb/dscf)

N = normality of barium perchlorate titrant, milliequivalents/ml

P_{bar} = barometric pressure at the exit orifice of the dry gas meter, mm Hg (in. Hg)

P_{std} = standard absolute pressure, 760 mm Hg (29.92 in. Hg)

T_m = average dry gas meter absolute temperature, °K (°R)

T_{std} = standard absolute temperature, 293°K (528°R)

V_a = volume of sample aliquot titrated, ml

V_m = dry gas volume as measured by the dry gas meter, dcm (dcf)

$V_{m(std)}$ = dry gas volume measured by the dry gas meter, corrected to standard conditions, dscm (dscf)

V_{soln} = total volume of solution in which the sulfur dioxide sample is contained, 100 ml

V_t = volume of barium perchlorate titrant used for the sample, ml (average of replicate rotrations)

V_{tb} = volume of barium perchlorate titrant used for the blank, ml

Y = dry gas meter calibration factor

32.03 = equivalent weight of sulfur dioxide

6.2 **Dry Sample Gas Volume, Corrected to Standard Conditions**

$$V_{m\,(std)} = V_m Y \left(\frac{T_{std}}{T_m}\right)\left(\frac{P_{bar}}{P_{std}}\right) = K_1 Y \frac{V_m P_{bar}}{T_m} \quad (6\text{-}1)$$

where:

K_1 = 0.3858 °K/mm Hg for metric units.
= 17.64 °R/in. Hg for English units.

6.3 **Sulfur Dioxide Concentration**

$$C_{SO_2} = K_2 \frac{(V_t - V_{tb}) N \left(\frac{V_{soln}}{V_a}\right)}{V_{m\,(std)}} \quad (6\text{-}2)$$

where:

K_2 = 32.03 mg/meq for metric units.
= 7.061×10^{-5} lb/meq for English units.

7. Bibliography

1. "Atmospheric Emissions from Sulfuric Acid Manufacturing Processes," U.S. DHEW, PHS, Division of Air Pollution. Public Health Service Publication No. 999-AP-13. Cincinnati, Ohio. 1965.

2. Corbett, P. F., "The Determination of SO_2 and SO_2 in Flue Gases," *Journal of the Institute of Fuel*, **24**, 237-243, 1961.

3. Matty, R. E., and E. K. Diehl, "Measuring Flue-Gas SO_2 and SO_2, *Power* **101**, 94-97, November 1957.

4. Patton, W. F., and J. A. Brink, Jr., "New Equipment and Techniques for Sampling Chemical Process Gases," *Journal of the Air Pollution Control Association*, **13**, 162, 1963.

Copyright ASME International
Provided by IHS under license with ASME
No reproduction or networking permitted without license from IHS

Not for Resale

5. Rom, J. J., "Maintenance, Calibration, and Operation of Isokinetic Source-Sampling Equipment," Office of Air Programs, Environmental Protection Agency, Research Triangle Park, N.C. APTD-0576. March 1972.

6. Hamil, H. F., and D. E. Camann, "Collaborative Study of Method for the Determination of Sulfur Dioxide Emissions from Stationary Sources (Fossil-Fuel Fired Steam Generators)," Environmental Protection Agency, Research Triangle Park, N.C. EPA-650/4-74-024. December 1973.

7. Annual Book of ASTM Standards. Part 31; Water, Atmospheric Analysis, pp. 40-42, American Society for Testing and Materials, Philadelphia, Pa. 1974.

8. Knoll, J. E., and M. R. Midgett, "The Application of EPA Method 6 to High Sulfur Dioxide Concentrations," Environmental Protection Agency, Research Triangle Park, N.C. EPA-600/4-76-038. July 1976.

Copyright ASME International
Provided by IHS under license with ASME
No reproduction or networking permitted without license from IHS

Not for Resale

Brookhaven Controlled Condensation System for the Measurement of Combustion Flue Gas Pollutants

DETAILS OF THE METHOD

1. Scope

1.1 **Design.** This method is primarily aimed at measuring the vapor phase flue gas content of sulfur dioxide (SO_2) and sulfuric acid (H_2SO_4) plus the metal sulfate (MSO_4) particulate suspended in the flue gas of combustion sources. The method also yields other gas phase constituents including water vapor (H_2O), oxygen (O_2), carbon monoxide (CO), carbon dioxide (CO_2), and nitrogen oxides (NO_x) as well as total suspended particulate (TSP) and the principal elemental composition of both the water soluble and insoluble portions of the particulate.

1.2 **Application.** Range of applicability of this method for SO_2 is 0.05 to 5000 ppm and for H_2SO_4, 0.02 to 100 ppm (where ppm is parts-per-million on a molar or volume basis). The concentration of MSO_4 can be determined over the range 0.1 to 200 mg/m^3 as sulfate and TSP from 5 to 25,000 mg/m^3. Water vapor is measured in the range from 5 to 15 percent, NO_x from 10 to 3000 ppm, and the other fixed gases from 0.005 to 15 percent. Principal elements are determined in both the insoluble and soluble portion of the TSP with a limit of detection of about 0.1 to 0.5 mg/m^3.

1.3 **Definitions**

1.3.1 Total suspended particulate (TSP) is the weight of the total matter retained by the in-stack nozzle/filter assembly relative to the volume of flue gas sampled.

1.3.2 Sulfuric acid (H_2SO_4), which is generally a vapor at the usual temperature (300°F) of the flue gas, i.e., 160°C (320°F), but which can partially be present as an aerosol and partially as adsorbed on the particulate, is that amount of acid material found in the 100 percent isopropyl alcohol extract of the filter and the washings of the probe, controlled condensation coil, and back-up filter.

At flue gas temperatures exceeding 250°C, for example at an air heater inlet, the equilibrium between H_2SO_4 and SO_3 in the presence of H_2O can be shifted partially or entirely towards SO_3. In this case temperature must be reduced to convert the SO_3 to H_2SO_4 in order to achieve efficient collection.

1.4 **Significance.** This method can be used for testing compliance with regulations governing the emissions of total suspended particulate (TSP) and oxides of nitrogen as well as plume visibility, which is dependent on TSP and sulfuric acid emission rate.

2. Summary of Method

2.1 **Field Procedures.** Flue gas is sampled isokinetically at nominally 10 L/min through an in-stack nozzle/filter assembly (NFA) which removes all suspended particulate but passes the H_2SO_4 vapor. Subsequently the H_2SO_4 is condensed to an aerosol and removed by impaction in the controlled condensation coil (CCC) and a back-up filter (BUF) of quartz fiber, both of which are maintained above the water dew point. A major portion of the flue gas water vapor is removed in an ice water jacketed condensation coil and receiver vessel, after which SO_2 is removed by oxidation to sulfate in dual impingers containing 3 percent H_2O_2 solution. The dried gas, a portion (0.5 L) of which is collected in a pre-evacuated bottle and a portion (0.5 L) in a pre-evacuated flask, is metered with a dry test meter at the exit of the pump. At the conclusion of the run, the NFA and BUF are placed in separate plastic bags and the probe, CCC, and two impingers are separately washed and the solutions retained for analysis. The volume of water collected is measured and then discarded, as it contains no significant amounts of SO_2 or NO_x.

2.2 **Laboratory Procedures.** The NFA is conditioned and weighed for TSP, washed with 100 percent isopropyl alcohol (IPA) to recover any adsorbed H_2SO_4 and with washing solution to recover MSO_4, and conditioned and weighed again to obtain total insoluble suspended particulate. Any H_2SO_4 recovered from the NFA IPA wash is included with the total acid. The sulfate content of the water wash of the NFA is determined and principal elements are separately determined from the water wash and the insoluble particulate. Washings from the probe, CCC, and BUF together with the IPA wash of the NFA are used to determine total sulfuric acid. Sulfur dioxide is determined from the impingers, NO_x from the flask, and O_2, CO, and CO_2 from the bottle.

3. Apparatus

3.1 **Field Sampling Equipment.** The equipment described in this section is either readily commercially available or easily fabricated. An overall layout of the equipment (cf., Fig. 1) shows the sampling arrangement of the NFA, probe and H_2SO_4 controlled condenser coil (CCC) with aluminum probe assembly support, BUF, water condenser and receiver, SO_2 impingers, dryer, pump, evacuated bottle, NO_x flask, and dry test meter.

Copyright ASME International
Provided by IHS under license with ASME
No reproduction or networking permitted without license from IHS
Not for Resale

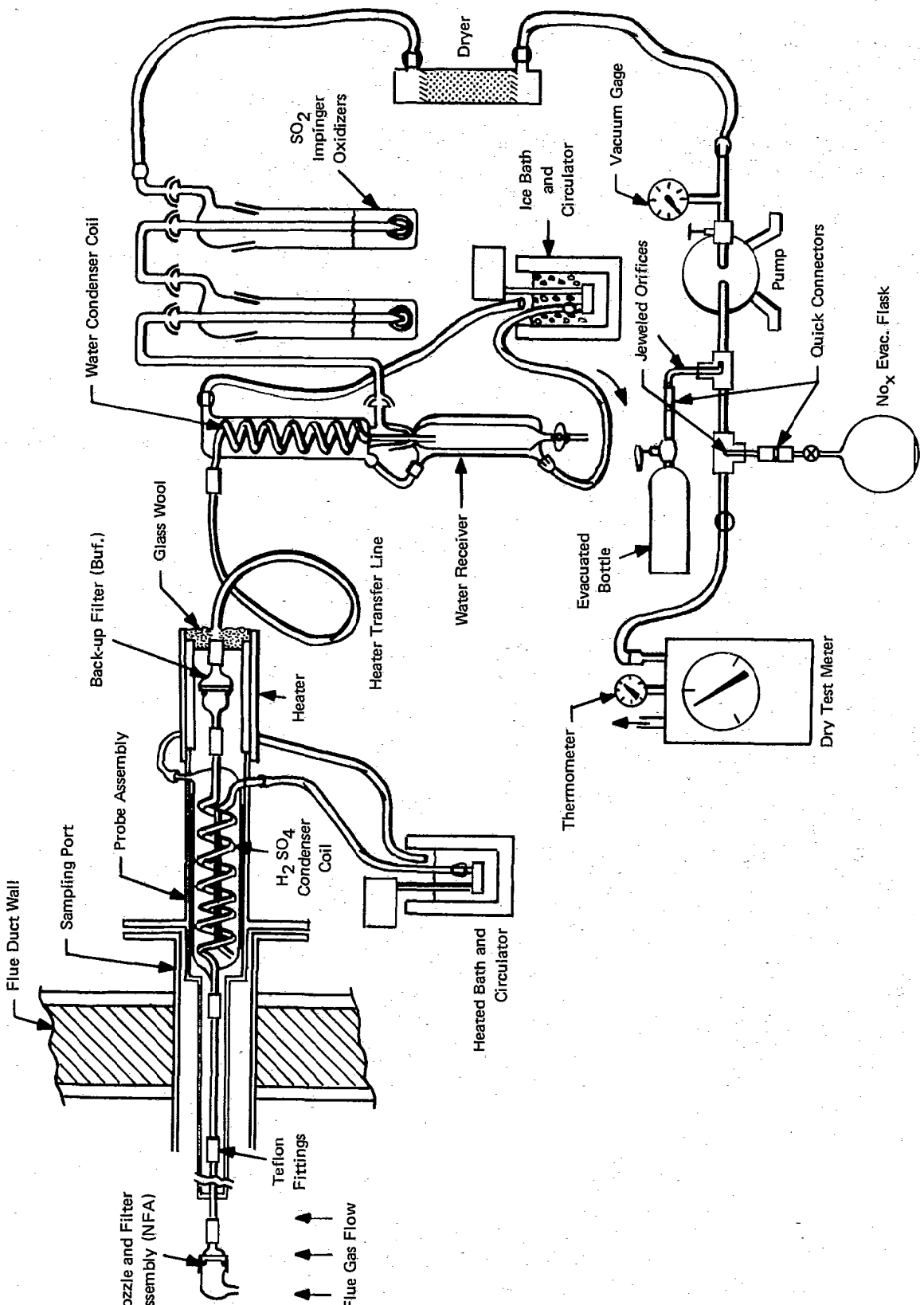

FIG. 1 SCHEMATIC DIAGRAM OF BNL CONTROLLED CONDENSATION SCHEME

Not for Resale

Copyright ASME International
Provided by IHS under license with ASME
No reproduction or networking permitted without license from IHS

3.1.1 **Nozzle/Filter Assembly (NFA)**

One end of the assembly is fabricated from a 60 mL course fritted Pyrex Buchner funnel as shown in Fig. 2. On the face of the frit, a 40 mm diameter Pallflex tissue quartz fiber filter (QAO 2500) that has been phosphoric acid washed and heat treated to remove organic binder (Reference 1) is held in place with a Vitron O-ring (satisfactory up to 250° to 300°C). The nozzle half of the assembly makes a leak tight seal against the O-ring when held with the four stainless steel spring retainers. The assembled nozzles are shown in Fig. 3. The smaller nozzle (0.37 cm diameter) is used for sampling where flue gas velocities are 100 ft/sec and the larger (0.79 cm diameter) for velocities near 20 ft/sec. A 3/8-in. Teflon compression fitting secures the NFA to the end of the glass probe and the entire NFA is wired to the aluminum probe sheath to prevent loss during removal from the sampling port.

3.1.2 **Probe Assembly**

Borosilicate glass tubes, 3/8-in. in outside diameter and in 3-ft long sections, are interconnected with Teflon compression fittings and slide into a nominal 1-in. aluminum pipe sheathing which is fashioned to the appropriate length from 1- , 2- , and 4-ft sections. Only the 3-ft glass section nearest the H_2SO_4 condenser coil (cf., Fig. 1) is wrapped with a self-sticking heater tape to maintain the probe temperature at about 160° to 170°C (320° to 340°F) in the region passing through the flue duct wall; the balance of the probe as well as the NFA, is at flue gas temperature. The end of the aluminum probe in the flue gas has a pipe cap with a 3/8-in. hole to allow the passage of the glass probe for connection to the NFA. The other end is connected directly to the H_2SO_4 condenser coil aluminum housing which is a 12-in. length of nominal 2½-in. pipe with a 6½-in. flange.

3.1.3 **H_2SO_4 Controlled Condenser Coil (CCC)**

The coil consists of an outer Pyrex jacket about 2 in. in diameter around a 17-turn coil of 6 mm I.D. Pyrex tubing. Provision is made to control the temperature of the jacket at 60°C (140°F) with water from a heated bath and circulator.

3.1.4 **Back-up Filter (BUF)**

Although most of the H_2SO_4 is removed in the CCC, some of the aerosol would escape collection if not retained by the heated BUF, located immediately after the CCC as shown in Fig. 1. The BUF, which is essentially identical to the NFA except for straight 3/8-in. O.D. tubulations on either end, is also maintained at 60°C (140°F) by an electrically controlled clam-shell heater. Tests have demonstrated better than 98 percent efficiency for the collection of H_2SO_4 aerosol. (Reference 2.)

3.1.5 **Water Condenser and Receiver**

A 13-turn jacketed condenser, similar in dimensions to the CCC, and a 150-mL jacketed cylinder, each cooled to about 0.5°C with circulating ice water, are connected to the BUF through an electrically heated Teflon transfer line. Polyvinyl chloride (PVC) tubing is used to connect the circulators to the jacketed devices and also for a number of subsequent sampling train interconnections as indicated in Fig. 1.

3.1.6 **SO_2 Impingers**

Two Smith-Greenburg 500 mL impingers containing H_2O_2 solutions are used to oxidize and remove SO_2.

3.1.7 **Dryer**

A total of about 400 mL of Drierite is used to remove remaining moisture to prevent corrosion of the pump and dry test meter. The drying agent is divided equally between two tubes, with one being replaced as soon as the second shows signs of collecting water (e.g., on color change).

3.1.8 **Pump**

The rotary vane compresser is capable of delivering 10 L/min while pulling on a vacuum of up to 20 in. Hg. Flow rate during sampling is adjusted by the valve on the leak-tight pump.

3.1.9 **Evacuated Sample Bottle**

A 1-L steel sampling bottle equipped with a toggle valve, quick connect, and 20 mL/min orifice with filter is teed into the exhaust of the pump.

3.1.10 **NO_x Flask**

A pre-evacuated 1000 mL glass flask containing acidified peroxide solution and equipped with a glass valve and 20 mL/min critical orifice is teed into the exhaust line after the evacuated bottle.

3.1.11 **Dry Test Meter**

With a resolution of 1 L per revolution, total volume of sample collected is recorded by the dry test meter. Using a stop watch, sampling rates are determined.

3.1.12 **Plastic Bottles and Bags**

Polyethylene bottles are used to retain the SO_2 impinger solutions and the wash solutions from the probe and the CCC. Polyethylene zip-lock type bags are used to package the NFA and BUF for subsequent analytical work up.

3.1.13 **Thermometer**

Dial thermometers are used to measure the temperature of the heated bath, ice bath, and dry test meter. A multiprobe thermocouple meter is used to record temperatures of the flue gas and the heaters for the probe, BUF, and Teflon transfer line.

3.1.14 **Ambient Thermometer/Humidity**

A recording thermometer and relative humidity indicator is necessary for accurate moisture material balances.

3.1.15 **Pitot Tube and Manometer**

Either an inclined manometer or pressure gage with 0.01-in. H_2O sensitivity is needed to measure flue gas velocity as detected by a Pitot tube.

Copyright ASME International
Provided by IHS under license with ASME
No reproduction or networking permitted without license from IHS
Not for Resale

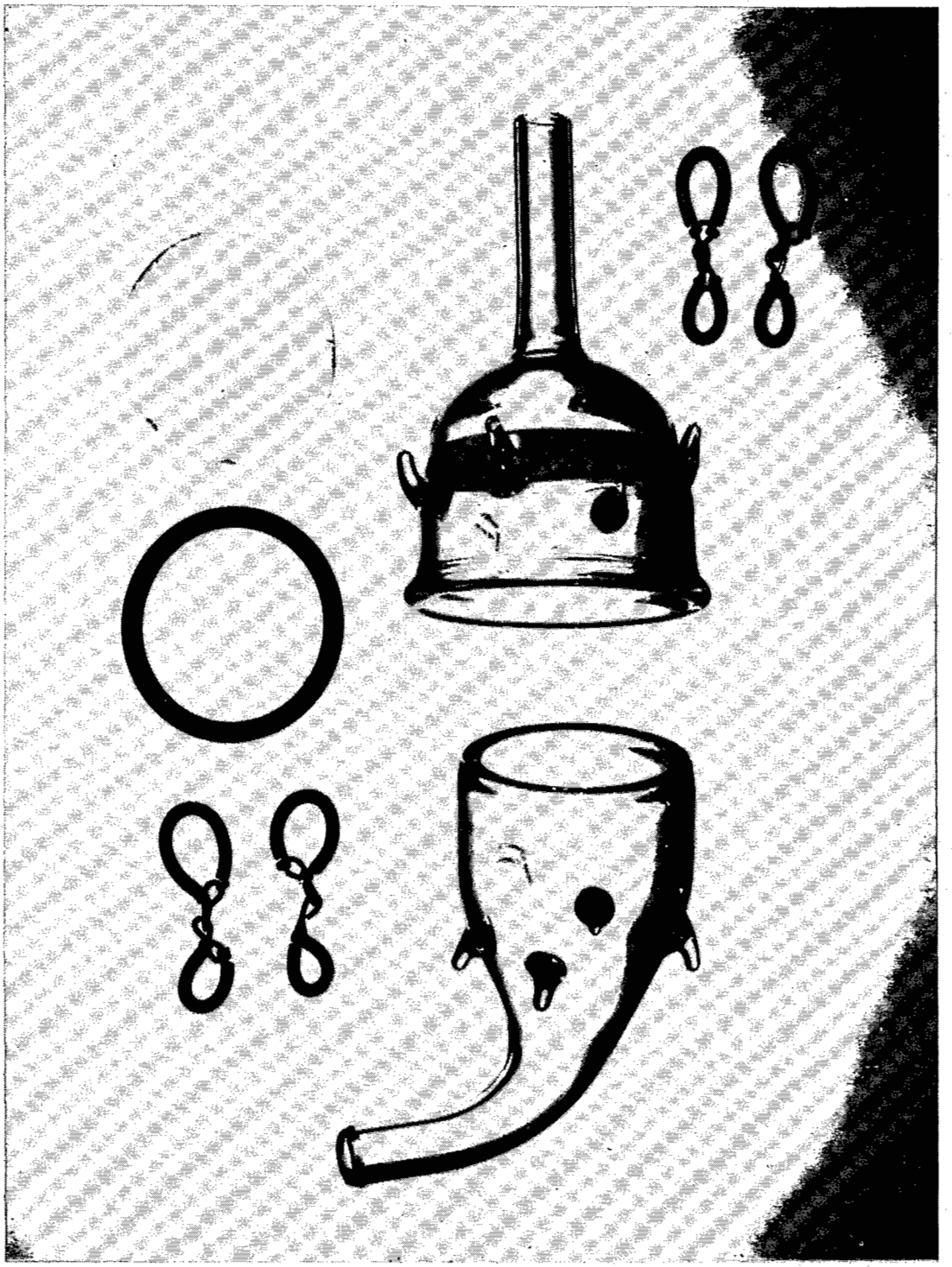

FIG. 2

Copyright ASME International
Provided by IHS under license with ASME
No reproduction or networking permitted without license from IHS
Not for Resale

3.1.16 **Oxygen Analyzer**

Furnace oxygen content is obtained by sampling and recording with a continuous electrochemical analyzer, drawing a sample through a water condenser and dryer to prevent the formation of liquid water. The measurement is generally performed at the air heater inlet since air leakage into the ducting is usually minimal up to that point. Oxygen determinations at locations further downstream, including the sulfur oxides sampling locations, are always contaminated by air leakage and are not a reliable measure of the furnace oxygen or excess combustion air. A controller sequentially provides for sampling, zeroing, and spanning (3 percent by volume of O_2) the analyzer over a 20-min cycle time.

3.2 **Laboratory.** The equipment described in this section is standard laboratory apparatus and instrumentation.

3.2.1 **Analytical Balance**

An automatic balance with 0.1 mg resolution and a capacity of about 100 g is required.

3.2.2 **Volumetric Glassware**

Pipettes, burettes, cylinders, flasks, beakers, and funnels. Titrations are performed with a 5 mL burette having 0.01 mL divisions.

3.2.3 **Vacuum Oven**

Having temperature control up to 100°C under vacuum is necessary for drying certain samples.

3.2.4 **Mortar with Pestle**

To obtain a homogeneous sample of the particulate from the filter, the entire filter is ground in a mortar.

3.2.5 **pH Meter**

Titration of H_2SO_4 washed from various parts of the sampling apparatus requires a pH meter with a resolution of 0.05 pH units.

3.2.6 **Ion Chromatograph**

Determination of total water soluble metal sulfates and the NO_x concentration requires the ion chromatograph as the best choice for determination of sulfate and nitrate ions.

3.2.7 **Atomic Absorption Spectrometer**

Principal elements in the flue gas particulate are determined by atomic absorption spectroscopy.

3.2.8 **Total Carbon Analyzer**

Soot or carbon level in the fly ash is determined from the carbon on the in-stack filter by ocnversion to CO_2 for detection by thermal conductivity in a CHN elemental analyzer.

3.2.9 **Shaker**

Proper reaction of the NO_x flue gas sample with the oxidizing solution requires an agitator or shaker.

3.2.10 **Thermal Conductivity Gas Chromatograph**

The gas chromatograph with a vacuum pump for sample transfer from the partially evacuated steel bottles is needed to determine sampling location O_2, CO, and CO_2. A vacuum gage (0-800 mm Hg) is needed for measuring sample volume.

4. Reagents

Standard reagent grade chemicals are used in all phases of sampling and analysis.

4.1 **Water.** Deionized water with a sulfate content of less than 0.05 g/mL is used.

4.2 **Isopropyl Alcohol.** Solutions of 100 percent IPA and a solution of 5 percent IPA in water (washing solution) are used.

4.3 **Sulfuric Acid (0.05M).** Volumetric prepared standards are used.

4.4 **Sodium Hydroxide (0.1 and 0.02 M).** Volumetric prepared standards are used.

4.5 **Buffer Solutions (pH 4 and 7).** Prepared buffer solutions are used to span the pH meter.

4.6 **Hydrogen Peroxide (3 Percent).** Fresh solutions are prepared from 30 percent H_2O_2 reagent as needed for the SO_2 impingers and the NO_x flask.

4.7 **Oxygen Gas Standard (3 Percent by Volume).** A prepared O_2 standard is required to certify the span of the O_2 field analyzer.

4.8 **Sulfate and Nitrate Solutions.** The ion chromatograph is calibrated for sulfate from 0.5 to 50 μg/mL and for nitrate from 0.1 to 50 μg/mL.

4.9 **Cation Standard Solutions.** The atomic absorption spectrometer is calibrated for principal metals using standard cation solutions.

5. Sampling Preparation

Before field sampling can commence, certain preparations are necessary in the laboratory.

5.1 **Nozzle and Filter Assembly (NFA).** Each field sample is performed with a separate NFA that has been assembled, conditioned by drawing 15 to 20 L of room air through each, and weighed. Record this tare weight to within ±0.1 mg. Each NFA has a numbered and lettered code for identification and is packed in a separate polyethylene zip-lock bag.

5.2 **Glassware.** All glassware including probes, controlled condensation coil, back-up filters, and SO_2 impingers are clean and free of any trace acid.

5.3 **Back-up Filter (BUF).** A separately labeled and assembled BUF is placed in a separate polyethylene zip-lock bag, one for each sampling run to be performed.

5.4 **SO_2 Impinger Solution.** For each run, two separate 250-mL polyethylene bottles containing 150 mL each of the 3 percent H_2O_2 solution are needed for the SO_2 impingers.

5.5 **Evacuated Bottle.** Each steel bottle is evacuated and closed by the toggle valve prior to deployment.

Copyright ASME International
Provided by IHS under license with ASME
No reproduction or networking permitted without license from IHS
Not for Resale

5.6 **NO_x Evacuated Flask.** Place 10 mL of 0.05 M H_2SO_4 and 10 drops of 3 percent H_2O_2 into each flask, and quickly (30s) evacuate to a residual pressure of about 10 mm Hg. Close the vacuum source, allow 1 to 2 min for the pressure in the flask to equilibrate, record the temperature and the pressure and then close the valve on the flask. (Note: Testing is being performed to determine if 0.02 M H_2SO_4 can be used to minimize the slight interference on the ion chromatograph, since the generally small nitrate peak, about 2 to 10 μg/mL, just precedes the larger sulfate peak, about 480 μg/mL; the volume of the NO_x flask should be precisely known to within ±1 mL.)

6. Field Sampling

6.1 **Preliminary.** Crushed ice is required for the water condenser circulator bath. A notebook is required to record pertinent data, a stopwatch for determining flow rates, and several extension cords for power. Set up the portable recording temperature and humidity device in a shady location.

6.2 **Oxygen Analyzer.** Install the portable oxygen analyzer and sequential controller at a sampling port near the inlet of the air heater. Traverse the depth of the duct at the port located near the center of the face of the duct to establish a location that provides a representative sample. Be especially careful to exclude leaks where the probe attaches to the port. Attach the oxygen analyzer to a recorder.

6.3 **Nozzle Size Selection.** Measure the velocity in the duct to be sampled using the standard Pitot tube and manometer. Velocity is calculated from

$$V, \text{ ft/sec} = 3.90\sqrt{\Delta P(t + 273.2)} \qquad (1)$$

where ΔP is the manometer reading in inches of water and t is the temperature of the flue gas (°C). Based on the velocity, a nozzle size is selected, such that isokinetic sampling can be performed with a flow rate in a range of from 4 to 6 L/min if total particulate is in the range of 0.5 to 2.5 g/m^3 (coal-fired ESP inlet), 8 to 10 L/min if total particulate is from 200 to 1000 mg/m^3 (coal-fired ESP outlet), and 10 to 14 L/min if total particulate is less than 200 mg/m^3 (oil-fired unit). Table 1 shows that three nozzle sizes from 3.5 mm to 8 mm would provide the necessary range to cover velocities expected at conventional combustion sources. (Note: The efficiency of the back-up filter (BUF) for collection of H_2SO_4 aerosol breaking through the controlled condensation coil (CCC) has been shown to be greater than 98 percent removal at flow rates from 0.5 to 15 L/min[2] (Reference 2). The efficiency of the SO_2 impinger was found to be 95 to 98 percent for one impinger and greater than 99 percent for two in series at flow rates up to 15 L/min[3] (Reference 3)).

TABLE 1

Nozzle Diameter and Sampling Flow Rate Selection
Flue Gas Temperature of 300°F (149°C)

ΔP, in. of water	Flue Gas Velocity, ft/sec	Flow Rate[a], L/min at 16°C (60°F) 3.5 mm[b]	5.5 mm[b]	8 mm[b]
0.02	11	...	...	6.4
0.05	18	...	...	10.2
010	25	...	6.8	14.4
0.20	36	...	9.6	...
0.4	51	5.5	13.6	...
1.0	80	8.7	...	...
1.6	101	11.0	...	...
2.4	124	13.5	...	...

[a] Flow rate = 4.40 $A\sqrt{\Delta P \times (t + 273.2)}$; cf., Section 6.3 for definition of terms.
[b] Nozzle diameter.

6.4 **System Assembly.** Assemble appropriate lengths of glass probes with Teflon fittings and connect to the H_2SO_4 condenser coil with a Teflon fitting. After assembling the appropriate length of aluminum probe shield, slide the glass probe and condenser into the probe assembly, taking care that the connectors for the heated bath tubing slide into the appropriate slots. Use a weather stripping dough to make a leak-tight seal between the probe assembly and the end of the H_2SO_4 condenser, otherwise air leakage could occur between the condenser and the probe assembly when sampling at subatmospheric ducts, resulting in undesirable cooling of the probe.

Connect the BUF and its supported heating mantle to the back end of the H_2SO_4 condenser coil. Next, connect the appropriately sized NFA at the end of the probe using a Teflon connector and secure with wiring to prevent loss, especially when removing the assembly from the sampling port. Finally, attach the thermocouple lead near the filter in order to record flue gas temperature.

On a ring stand or small portable rack, appropriately interconnect the water condenser and receiver vessel with the two SO_2 impingers. Fill each impinger with 150 mL of the 3 percent H_2O_2 solution. Appropriately interconnect the impingers with the dryer and pump as shown in Fig. 1, using PVC tubing. Finally, connect the evacuated bottle, the NO_x flask, and the dry test meter. Record in the notebook, the NFA, BUF, NO_x flask, and evacuated bottle identifying numbers.

Before installing the probe assembly into the sampling port, a vacuum leak check is essential. Temporarily connect the heated transfer line between the BUF and the water condenser, plug the end of the NFA (e.g., someone can cover the inlet with his finger), and turn the pump on.

Copyright ASME International
Provided by IHS under license with ASME
No reproduction or networking permitted without license from IHS
Not for Resale

The flow of air, as indicated by the dry test meter, should decrease to essentially zero. *Caution:* remove plug or finger from the NFA before turning the pump off, otherwise part of the solution in the impingers would blow backwards out the impinger inlet. Similarly, the filters could be dislodged from their holders by the reverse flow of air.

When the system has been determined to be leak-tight, disconnect the heated transfer line from the BUF and install the entire probe assembly into the sampling port, making certain that the nozzle is facing *downstream*, that is, in the direction of flow. Using C-clamps, secure the probe assembly flange to the sampling port flange. Reconnect the heated transfer line and start the flow of water from the heated bath and ice bath. The heated bath should be adjusted to maintain the condenser water exit temperature at 58° to 62°C (136° to 144°F). At the same time adjust the temperature of the 3-ft heated probe section to about 160°C (320°F), and the BUF and heated transfer line to about 60°C (140°F). Set the dry test meter dials to zero.

6.5 **Sampling.** With all systems at the appropriate temperatures, rotate the probe assembly 180 deg so that the nozzle is facing upstream into the direction of flow, start the pump, and begin timing for a sample duration of 30 min. Adjust the valve on the pump to achieve the desired number of liters per minute as determined earlier (use the dry test meter and a watch). Record the pump vacuum and dry test meter temperature and, after 3 or 4 min, open the valves on the evacuated bottle and the NO_x flask.

Maintain a check on the temperature of the flue gas, probe, heated bath, BUF, and ice bath. Add ice to the bath as needed. Routinely check the sampling rate, as particulate building up on the filter in the NFA will increase the resistance to flow. To maintain the desired flow rate, the pump vacuum will have to be increased gradually during the 30 min sampling period by opening the pump valve. If pump vacuum must be increased to above 20 in. Hg vacuum in order to maintain flow (due to high particulate levels), terminate the run earlier than 30 min. Table 2 lists data to be recorded.

About 1 to 2 min before the end of the 30 min sampling period, close the valves on the evacuated bottle and the NO_x flask. Record the final pump vacuum.

At exactly 30 min, close the pump valve, turn off the pump, and rotate the probe assembly such that the nozzle faces downstream. It is important that the pump valve be closed first to prevent reverse flow of air which would blow out the impinger solution and also dislodge the filters. Record the elapsed sampling time and the volume indicated on the dry test meter. Disconnect the heated transfer line, turn off all heaters, remove the probe assembly, and allow to cool. Drain the water from the water receiver into a volumetric cylinder and record the volume of water. Discard the water. (Note: The ice bath condenser water has been shown to contain artifact sulfuric acid, form from the oxidation of a slight amount of dissolved SO_2 from the flue gas (Reference 1). The acidity in this water must not be included in the H_2SO_4 measurement. The amount of SO_2 and NO_x retained in the ice water is a negligible fraction of that collected, respectively, in the SO_2 peroxide impingers and the NO_x flask can be disregarded.)

TABLE 2

Sampling Parameters Recorded

1. Run number
2. Location
3. Date
4. Time
5. Probe length
6. NFA number
7. BUF number
8. Total run time
9. Barometric pressure
10. Ambient temp. and humidity
11. Dry test meter volume
12. Dry test meter temperature
13. Pump vacuum: Start and finish
14. Temperatures:
    - Stack
    - Probe
    - Condenser
    - BUF
    - Transfer line
    - Ice bath
15. Evacuated bottle number
16. NO_x flask number
17. Pitot tube pressure reading
18. Water condenser volume

Unit Operating Conditions

1. Furnace O_2
2. Power level
3. Fuel composition
4. Electrostatic precipitator conditions
5. Furnace CO

Pour the contents of each SO_2 impinger into separate 250-mL labeled polyethylene bottles, rinse the impingers, and include the washings in the respective bottles. Disconnect the evacuated bottle and the NO_x flask and store for return to the laboratory.

Remove the NFA and the BUF and store in their respectively labeled zip-lock polyethylene bags. Slide the probe and H_2SO_4 condenser coil out of the probe assembly. Disconnect the coil from the probe, rinse each with washing solution (5 percent isopropyl alcohol in water), and store the washings in separately labeled polyethylene bottles for subsequent analysis of the dissolved H_2SO_4. The system is now ready for reassembly for another sampling run.

7. Analysis of Field Samples

7.1 **Nozzle/Filter Assembly (NFA).** The NFA contains some adsorbed H_2SO_4 plus all the particulate matter from

Copyright ASME International
Provided by IHS under license with ASME
No reproduction or networking permitted without license from IHS

Not for Resale

the flue gas that was sampled. From the NFA, the total suspended particulate (TSP), the soluble sulfates, the principal elements in the soluble and insoluble fraction, and the carbon content of the particulate will be determined.

7.1.1 **Cleaning and Weighing**

Before the NFA can be weighed for gravimetric determination of TSP, any external material adhering to the outside of the assembly must be removed. Connect a rubber tube between the inlet and outlet of the NFA to prevent water from entering the filter during the washing and carefully flush the outside surfaces under running tap water to remove all particulate. Remove the rubber tube and place the NFA in a vacuum oven at 65°C for an overnight (16 hr) period. Maintain a beaker of water in the vacuum oven to limit the extent of drying of the filter, thereby minimizing the chances of loss of adsorbed H_2SO_4 or of converting soluble vanadyl sulfate pentahydrate into the insoluble form. However, drying does remove any residual adsorbed SO_2 if present. Following vacuum drying, condition the NFA by drawing 15 to 20 L of room air through each in a laminar flow hood. The weight of the NFAs can then be recorded to within ±0.1 mg.

7.1.2 **Recovery of Adsorbed H_2SO_4**

Flush 20 to 25 mL of 100 percent isopropyl alcohol (IPA) through the NFA (squirt the IPA into the nozzle end) to remove H_2SO_4 that has adsorbed onto the glass surfaces of the NFA. The amount of acid found on the NFA is usually 5 percent or less of the total acid recovered. The 100 percent IPA does not dissolve any metal sulfates. Dilute to about 100 mL with H_2O and titrate with 0.02 M NaOH to the same pH of a similar IPA blank solution (generally a pH of 5.6). Record the milliequivalent of acid found.

7.1.3 **Recovery of Soluble Particulate**

Wash the NFA with three 10-mL aliquots of water through the filter into a vacuum Erlenmeyer flask, drawing the water through at a slow rate to avoid physical removal of insoluble material. Dilute to 50 mL with H_2O.

7.1.3a *Determination of Soluble Sulfate.* A portion of the above solution is injected into an ion chromatograph for determination of sulfate content. Record the μg of sulfate per mL of solution (i.e., ppm) found.

7.1.3b *Determination of Principal Metals.* The balance of the solution is used to determine the principal water soluble elements by using an atomic absorption spectrometer. At oil-fired units the elements are generally Mg, V, Na, Ca, Ni, and Fe. At coal-fired units the same metals can be found and, in addition, K is a principal soluble metal. All of the water soluble metals in solution have been shown to be present originally as sulfates. Record the μg of metal per mL of solution found.

7.1.4 **Reweighing of NFA**

Again condition the NFA by drying overnight in the 65°C vacuum oven containing a beaker of H_2O and then by pulling several liters of room air through the assembly. Record the weight to within ±0.1 mg. The difference in weight between that found with all the particulate and that found after washing, can be related to the total weight of water soluble material.

7.1.5 **Recovery of Insoluble Particulate**

Carefully disassemble the NFA, remove the filter, and grind to a powder in a mortar with pestle.

7.1.5a *Determination of Principal Metals.* Decompose a representative sample of the ground filter in a crucible by a low temperature ignition in a 450°C oven for 1 hr to remove any organic matter. Then dissolve in 10 percent HCl containing a few drops of concentrated HNO_3 and dilute to 25 mL. Determine the principal metals as in Section 7.1.3b. For oil-fired units, the principal metals are Mg, V, Na, Ni, Fe, and Ca. At coal-fired units, K and Al are also determined. The high silicon content present in coal ash can be determined only if the sample is dissolved in HF and if a suitable correction can be made for the filter, which is 100 percent silica. Record concentrations as mg/g of sample.

7.1.5b *Determination of Carbon.* A portion of the ground filter which, of course, has not been ignited, but has been dried further in a low temperature oven, is placed in the sample boat of the elemental analyzer for determination of the carbon content by conversion to CO_2. Record the carbon content as mg C per g of sample.

7.2 **Determination of H_2SO_4.** During field sampling, sulfuric acid will have been retained primarily by the H_2SO_4 condenser coil, but a significant amount is found in the probe and the BUF, with a trace in the NFA (cf., Section 7.1.2).

7.2.1 **Probe and CCC H_2SO_4**

Bring the separately collected washings of the probe and controlled condensation coil (CCC) each to a volume of about 50 mL and titrate with 0.02 M NaOH from the 5 mL burette, using the pH meter to determine the end point (generally a pH of 5.6). Multiply the volume of titrant (measured to within 0.005 mL) in each case by the normality of the NaOH (0.02 N), and record the milliequivalents of acid found in both the probe and CCC washings (record to the nearest 0.0001 meq).

7.2.2 **BUF H_2SO_4**

Flush three 15 mL aliquots of washing solution (5 percent IPA in water) through the inlet end of the back-up filter (BUF), making certain to contact all of the inside surfaces. Combine the washings, titrate with 0.02 M NaOH as in Section 7.2.1 above, and record the milliequivalents of H_2SO_4.

Copyright ASME International
Provided by IHS under license with ASME
No reproduction or networking permitted without license from IHS

Not for Resale

7.2.3 **Total H_2SO_4**

The sum of the milliequivalents of H_2SO_4 found in the NFA (cf., Section 7.1.2), the probe and the CCC (Section 7.2.1), and the BUF (Section 7.2.2) represents the total milliequivalents of sulfuric acid to be recorded. (Note: In the absence of H_2SO_4 but with SO_2 present, the measured amount of acidity is always negligible, i.e., less than 0.0001 meq (Reference 2)).

7.3 **Determination of SO_2.** Bring the contents of the respective SO_2 impinger solutions each to a volume of 250 mL. Dilute a 2-mL aliquot of the first impinger solution and a 25-mL aliquot of the second, each of 50 mL, and titrate to the blank solution end point (pH ~ 5.6) using 0.1 M NaOH. Multiply the volume of titrant for the first impinger solution by 12.5 and add to it the volume of titrant from the second impinger titration. Record this number as the total milliequivalents of SO_2.

7.4 **Analysis of Evacuated Bottle.** Connect the bottle to the sample inlet port of the thermal conductivity gas chromatograph sample valve containing an 8-mL sample loop and evacuate up to the valve on the bottle. When a vacuum has been attained as indicated by a zero reading on a 0-800 mm Hg vacuum gage, close the vacuum valve, and open the sample bottle. Record the pressure and temperature and inject the sample into a molecular sieve column for separation of the oxygen, nitrogen, carbon monoxide, and CO_2 (Reference 4). Record the integrator areas for each constituent. Calibrate the chromatograph using room air at ambient conditions in a 0.5-mL sample loop, recording temperature and barometric pressure as well as peak areas.

7.5 **Analysis of NO_x Flask.** Shake the NO_x flask overnight on a laboratory agitator in order to ensure complex oxidation of the NO into nitrate. Then connect the flask to a vacuum gage (e.g., a Wallace-Tiernan), reduce the pressure in the line up to the valve on the flask to about 400 mm Hg, open the flask valve, and record the pressure and the temperature. Remove the flask, pour out the solution, and rinse several times. Dilute to 50-mL and determine nitrate by a calibrated ion chromatograph following standard procedures (Reference 5). Record concentration as $\mu g\ NO_3^-$ per mL.

8. Calculation of Results

This section presents the basic equations necessary to perform the desired calculations.

8.1 **Predicted SO_2 and H_2O.** Based on the composition of the fuel and the amount of excess air, a stoichiometrically balanced equation can be derived for the combustion process. A typical case for a fuel oil is shown in Table 3. Equation (2) in the table defines the total number of moles of flue gas, F, from the combustion of

TABLE 3

Calculations for Predicted Flue Gas Concentrations

STOICHIOMETRIC EQUATION

Typical Fuel Oil Composition (2.3 percent S):

	Weight Fraction	Moles	Moles per Unit C	Moles O_2 Required
C	0.8610	0.07168	1.000	1.000
H	0.1120	0.1111	1.550	0.3875
N	0.0030	0.00021	0.0030	0.0015
S	0.0230	0.00072	0.0100	0.0100
ash	0.0009			$1.399 \times f$

where f = 1 + fraction excess air

Total Air Components (moles per mole of fuel):

$$1.399 f\,O_2 + 5.215 f\,N_2 + 0.0624 f\,A + 0.0022 F\,CO_2 = 6.679 f$$

H_2O from Air Humidity:

$$\frac{P_{H_2O}}{760 - P_{H_2O}} \times 6.679 f = W, \text{ moles } H_2O/\text{mole fuel} \qquad (1)$$

$$CH_{1.55}N_{0.003}S_{0.01} + 1.399 f\,O_2 + 5.215 f\,N_2 + 0.0022 f\,CO_2 + W\,H_2O + 0.0624 f\,A \rightarrow 1.0024\,CO_2 + 1.399\,(f-1)\,O_2 + 5.215 f\,N_2 + (0.775 + W)\,H_2O + 0.010\,SO_2 + 0.0624 f\,A$$

TOTAL FLUE GAS MOLES

$$F = 0.3884 + 6.6764 f\,E\,W \qquad (2)$$

EXCESS AIR

$$[O_2]_\ell = \frac{139.9\,(f-1)}{F}$$

where:

$[O_2]_\ell$ = percent excess O_2 in furnace

f = 1 + fraction excess air

$$f = \frac{139.9 + (0.3884 + W)\,[O_2]_\ell}{139.9 - 6.6764\,[O_2]_\ell} \qquad (3)$$

SULFUR DIOXIDE

$$SO_2, \text{ ppm} = \frac{10^4\ (\text{wt \% S in fuel})}{2.3\,F} \qquad (4)$$

WATER VAPOR

$$H_2O, \% = \frac{(0.775 + W)\,100}{F} \qquad (5)$$

Copyright ASME International
Provided by IHS under license with ASME
No reproduction or networking permitted without license from IHS
Not for Resale

one mole of carbon in the fuel. The unknowns in equation (2) can be computed from equation (1) and (3). By substituting equation (1) for W in equation (3), f can be calculated explicitly in terms of the partial pressure of ambient humidity and furance oxygen level, $[O_2]\ell$, which was determined from the portable analyzer.

Once F has been calculated, the predicted levels of SO_2 and H_2O are calculated from equations (4) and (5), respectively. The benefit of calculating the expected levels of SO_2 and H_2O is that they can be compared to the corrected measured concentrations. If the agreement is good (i.e., within ±5 percent), a certain degree of confidence can be placed in the representativeness of the sample.

8.2 **Measured SO_2, H_2O, Sulfate, and H_2SO_4.** First, the volume of flue gas sampled must be calculated. The volume of the dried flue gas, V_{FD}, as measured by the dry test meter is given by

$$V_{FD} = M.R. \times \frac{B.P.}{760} \times \frac{288.7}{(t + 273.2)} \qquad (2)$$

where:

V_{FD} = dry flue gas volume, L (NTP),
$M.R.$ = dry test meter reading, L
$B.P.$ = barometric pressure, mm Hg, and
t = meter temperature, °C.

(Note: NTP is 60°F (15.6°C) and 1 atm)

A portion of the original flue gas contained water vapor which was not seen by the dry test meter since most was condensed out and the balance was removed by the dryer. That portion which was removed by condensation is given by

$$V_{WC} \frac{V_{WL}}{18} \times 23.7 \qquad (3)$$

where:

V_{WC} = vapor volume of condensed H_2O, L (NTP), and
V_{WL} = volume of condensed H_2O, mL.

That portion of water which was removed by the dryer is given by

$$V_{WA} = \frac{P_o}{P_v - P_o} \times V_{FD} \qquad (4)$$

where:

V_{WA} = vapor volume of adsorbed H_2O, L (NTP),
P_o = vapor pressure of H_2O at ice bath temp., mm Hg, and
P_v = vacuum pump absolute inlet pressure, mm Hg.

The sume of equations (2), (3), and (4) is the volume of flue gas containing the water vapor, that is,

$$V_{FW} = V_{FD} + V_{WC} + V_{WA} \qquad (5)$$

From the volume of the wet flue gas, V_{FW}, and the milliequivalents of SO_2 and H_2SO_4, the measured flue gas concentration of those constituents can be calculated:

$$C_m = 11845 \times \frac{MEQ}{V_{FW}} \qquad (6)$$

where:

C_m = measured concentration of SO_2 or H_2SO_4, volume ppm,
MEQ = milliequivalents of SO_2 or H_2SO_4, and
V_{FW} = volume of wet flue gas, L (NTP).

The measured concentration of H_2O in the flue gas is simply given by

$$C_{H_2O} = \frac{(V_{WC} + V_{WA})\ 100}{V_{FW}} \qquad (7)$$

where:

C_{H_2O} = measured concentration of H_2O, volume percent.

From the concentration of sulfate found in the 50 mL of filter wash solution, the concentration in the flue gas is given by

$$C_{SO_4} = 12.34 \times \frac{SO_4}{V_{FW}} \qquad (8)$$

where:

C_{SO_4} = measured concentration of flue gas sulfate, vol ppm, and
SO_4 = concentration of sulfate in 50 mL solution, wt ppm.

(Note: Multiplying C_{SO_4} = by 4.055 gives sulfate as mg $SO_4 = /m^3$.)

8.3 **Measured Oxygen at Sampling Location.** By taking into account the higher O_2 content in the sampled flue gas compared to that present in the furnace region, correction can be made for dilution of the flue gas from air leaks in the ducting. The O_2 in the sampled flue gas is determined from the evacuated bottle sample as analyzed on the gas chromatograph.

The O_2 calibration factor of the chromatograph was calculated by

$$C_F = \frac{V_L}{A} \times \frac{P - P_{H_2O}}{760} \times \frac{273.2}{(t + 273.2)} \times 0.2188 \qquad (9)$$

where:

C_F = calibration factor,
V_L = volume of sample loop, mL,
A = integrator area,

Copyright ASME International
Provided by IHS under license with ASME
No reproduction or networking permitted without license from IHS
Not for Resale

P = pressure of sample, mm Hg,

P_{H_2O} = partial pressure of humidity, mm Hg, and

t = temperature of sample loop, °C

for samples of lab air used in the calibration oxygen.

The concentration of oxygen actually found in the bottle is given by

$$C_{O_2} = \frac{100 \times A \times C_F}{V_L} \times \frac{760}{P} \times \frac{(t + 273.2)}{273.2} \times \frac{V_{FD}}{V_{FW}} - \frac{6.24f}{F} \quad (10)$$

where:

C_{O_2} = measured flue gas O_2, vol percent.

The last term in equation (10) is a correction for the amount of argon in the flue gas from the combustion air, since oxygen and argon are co-emitted on the gas chromatograph. The magnitude of this last term is generally equal to 0.88 percent argon.

Carbon monoxide concentration is easily found by

$$C_{CO} = (C_{O_2} + 0.88) \frac{A_{CO}}{A_{O_2}} \quad (11)$$

which is simply ratioing the areas for the CO peak to that for the combined oxygen plus argon peak.

8.4 **Correction of Measured Concentrations.** Since much of the ducting routing flue gas through the air heater and subsequently into the stack is generally under negative pressure, there can be substantial leaks of ambient air into the ducting causing dilution of typically 10 to 15 percent, but sometimes more. In order to correct for this dilution so that simple calculation can then be made of the mass emission rate of pollutants based on the stoichiometry of the combustion, the concentrations found for SO_2, H_2SO_4, sulfate, and CO should be corrected by

$$C^*_{flue} = C_m \frac{20.95 - [O_2]_\ell}{20.95 - [O_2]_m} \quad (12)$$

where:

C^*_{flue} = concentration in flue gas with no leaks,

C_m = concentration as actually measured,

$[O_2]$ = oxygen level in furnace, vol percent, and

$[O_2]_m$ = measured oxygen, i.e., C_{O_2} from equation (10).

(Note: C_{SO_2} from (equation (12) should agree closely with the expected SO_2 level as calculated in Table 3.)

For H_2O, the correction is complicated slightly by the addition of water from the humidity of the ambient air that leaked into the duct. The correction is

$$[H_2O]^*_{flue} = \frac{[H_2O]_m(20.95 - [O_2]_\ell) - [H_2O]_{air}([O_2]_m - [O_2]_\ell)}{20.95 - [O_2]_m} \quad (13)$$

where:

$[H_2O]^*_{flue}$ = concentration of H_2O in the flue gas with no leaks, vol percent, and

$[H_2O]_{air}$ = concentration of H_2O in ambient air, vol percent.

Again, the water concentration as calculated above should agree with the expected level from Table 3.

The actual volume of furnace gas that was sampled, that is, the undiluted flue gas, can also be found by

$$V^*_{FW} = V_{FW} \frac{20.95 - [O_2]_m}{20.95 - [O_2]_\ell} \quad (14)$$

8.5 **Total Suspended Particulate (TSP).** The difference in weight of the NFA after use and its tare weight can be used to calculate TSP by

$$TSP = \frac{(W_{used} - W_{tare})\ 10^6}{V^*_{FW}} \quad (15)$$

where:

TSP = total suspended particulate, mg/m^3,

W_{tare} = used weight of NFA, g,

V^*_{FW} = actual furnace gas volume, L (NTP).

Similarly, the amount of water insoluble fly ash in the flue gas can be calculated by

$$IP = \frac{(W_{wash} - W_{tare})\ 10^6}{V^*_{FW}} \quad (16)$$

where:

IP = insoluble particulate, mg/m^3, and

W_{wash} = weight of NFA after a water wash of filter, g.

8.6 **NO_X Concentration.** The NO_X concentration in the flue gas can be computed from the concentration found in the NO_X flask. First, the volume of the flue gas sample is given by

$$V_f = (V'_f - 0.01) \times \frac{P_f - P_i}{760} \times \frac{289}{(t + 273.2)} \quad (17)$$

where:

V_f = volume of sampled flue gas in NO_X flask, L,

V'_f = volume of flask, L,

P_f = final flask pressure after sampling, mm Hg,

P_i = initial flask pressure with acidified H_2O_2, mm Hg, and

t = flask temperature during pressure measurement, °C.

The NO_X concentration in the sampled flue gas is given by

Copyright ASME International
Provided by IHS under license with ASME
No reproduction or networking permitted without license from IHS
Not for Resale

$$C_{NO_x} = \frac{C_{NO_3^-} \times 50 \times 23.7}{62 \times V_f} \quad (18)$$

where:

C_{NO_x} = NO_x concentration in sampled flue gas, vol ppm, and

$C_{NO_3^-}$ = nitrate concentration from ion chromatograph, μg/mL.

Taking into account the fact that the sampled flue gas had been dried and correcting for flue duct leaks, the actual NO_x concentration in the furnace gas is

$$C^*_{NO_x} = C_{NO_x} \times \frac{V_{FD}}{V^*_{FW}} \quad (19)$$

where:

$C^*_{NO_x}$ = NO_x concentration in furnace gas, vol ppm,

V_{FD} = volume of dry flue gas sampled (cf., equation (2)), L (NTP), and

V^*_{FW} = volume of wet flue gas with no ducting leaks (cf., equation (14)), L (NTP).

8.7 **Calculated H_2SO_4 Dew Point Concentration.** It is possible in some circumstances, especially when flue gas temperatures are too low, that the amount of H_2SO_4 in the flue gas can be close to the dew point concentration. Under such conditions, significant amounts of low temperature corrosion could occur. The dew point concentration can be calculated from (Reference 6).

$$\ln C_{H_2SO_4} = \frac{0.00002943 \ln \left(B.P. \times \frac{C_{H_2O}}{100} + \frac{1}{(t+273.2)}\right) - 0.002276}{0.0000858 \left[0.0723 \ln B.P. \times \frac{C_{H_2O}}{100} - 1\right]} - \ln \frac{B.P.}{10^6} \quad (20)$$

where:

$C_{H_2SO_4}$ = dew point concentration of H_2SO_4, vol ppm,

C_{H_2O} = measured H_2O concentration (equation (7)), vol percent,

$B.P.$ = barometric pressure, mm Hg, and

t = flue gas temperature, °C.

For example, at a flue gas temperature of 138°C (280°F), a water concentration of 12 percent, and a barometric pressure of 760 mm Hg, the dew point concentration is calculated to be 8.7 ppm H_2SO_4. If a measured concentration comes close to the calculated dew point concentration, or exceeds it, then condensation of acid is almost certainly occurring. That could lead to corrosion in the air heater and the ducting up to the stack.

8.8 **Metals Emissions.** The metals that were present in the flue gas fly ash can be expressed in terms of the portion that was present as water soluble sulfates and as insoluble oxides.

8.8.1 **Water Soluble Metals**

From the elemental analyses of the water soluble fraction of the filter washings, the concentration of soluble metals can be calculated by

$$C_{M-S} = \frac{50 M_s}{V^*_{FW}} \quad (21)$$

where:

C^*_{M-s} = concentration of soluble metals in flue gas, mg/m^3,

M_s = soluble metals concentration in 50 mL solution, μg/mL, and

V^*_{FW} = actual furnace gas volume, L (NTP).

8.8.2 **Insoluble Metals**

From the elemental analyses of the insoluble oxides remaining on the water washed filter, the concentration of insoluble metals can be calculated by

$$C^*_{M-I} = \frac{(IP \times V^*_{FW} + 90{,}000) M_I \, 10^{-3}}{V^*_{FW}} \quad (22)$$

where:

C^*_{M-I} = concentration of insoluble metals in flue gas, mg/m^3,

IP = insoluble particulate (from equation (16)), (that is, μg/L), and

M_I = insoluble metals concentration in ground filter, mg/g.

The term represented by 90,000 is the typical weight in μg of the 40 mm diameter filter.

Using this data on metal concentration in the flue gas, material balances can be performed on the inventory of metals distribution within the combustion unit (Reference 7).

8.9 **Mass Emissions Calculations.** Based on the stoichiometer equation for the combustion of the fuel, the total moles of furnace gas per mole of carbon can be calculated by an equation of the form of equation (2) in Table 3. This value, F, which will have a different equation for differences in fuel type and composition, can then be used to compute the volume of furnace gas produced per pound of fuel consumed:

$$F_v = 0.895 \times F \times [C] \quad (23)$$

where:

F_v = volume of furnace gas, m^3/# of fuel,

Copyright ASME International
Provided by IHS under license with ASME
No reproduction or networking permitted without license from IHS
Not for Resale

F = moles of furnace gas/mole of carbon (cf., equation (2), Table 3), and

$[C]$ = wt fraction of carbon in the fuel.

Once F_v has been determined, it is a simple matter to compute mass emissions by multiplying F_v by the concentration in mass per unit volume of any of the previously calculated constituents. For example, the concentration of NO_X in mass per unit volume is

$$C^{**}_{NO_2} = C^{*}_{NO_X} \frac{MW_{NO_2}}{23.69} \tag{24}$$

where:

$C^{**}_{NO_2}$ = mass concentration expressed as mg of NO_2 per m^3,

$C^{*}_{NO_X}$ = NO_X concentration in furnace gas, vol ppm, and

MW_{NO_2} = molecular weight of NO_2, 46 mg/mmole.

The mass emission rate can then be calculated from

$$E_{NO_2} = 2.2 \times 10^{-6} F_{v,} \times C^{**}_{NO_2} \tag{25}$$

where:

E_{NO_2} = pounds of NO_2 per pound of fuel.

Multiplying E_{NO_2} by the heating value of the fuel can convert E to mass emission per unit of heat input.

Copyright ASME International
Provided by IHS under license with ASME
No reproduction or networking permitted without license from IHS

Not for Resale

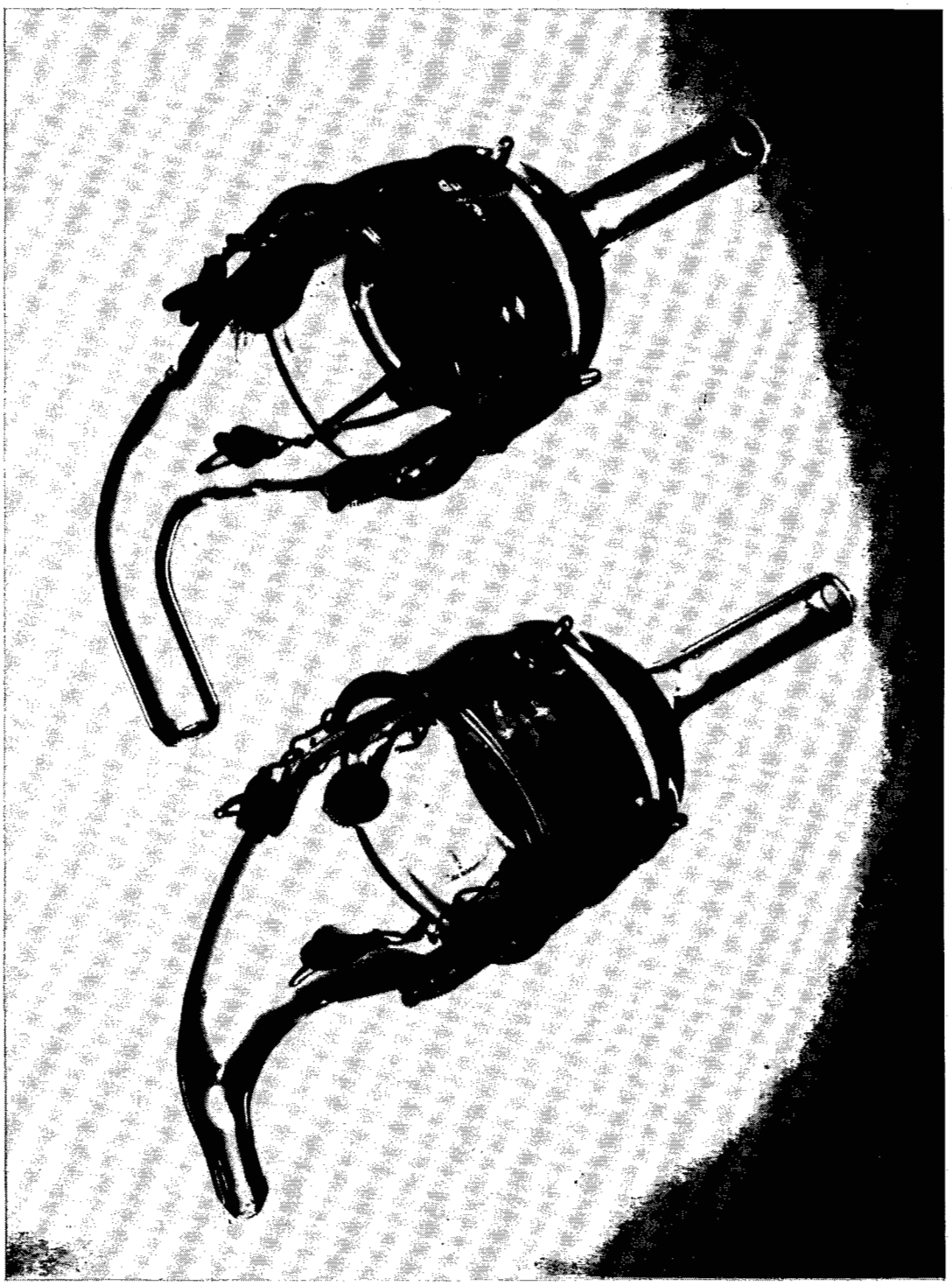

FIG. 3

Copyright ASME International
Provided by IHS under license with ASME
No reproduction or networking permitted without license from IHS

Not for Resale

REFERENCES

1. Tanner, R. L., Cederwall, R., Garber, R., Leahy, D., Marlow, W., Meyers, R., Phillips, M., and Newman, L., "Separation and Analysis of Aerosol Sulfate Species at Ambient Concentrations," *Atmospheric Environment* **11**, 955-966 (1977).

2. Dietz, Russell N., "Factors Affecting the Concentration of H_2SO_4/MSO_4 in combustion gas," presented at Engineering Foundation Conference on Stack Sampling and Stationary Source Emission Evaluation, April 1, 1979, unpublished work, Brookhaven National Laboratory.

3. Dietz, Russell N., and Wieser, Robert F., "Sulfate Emissions from Fossil Fueled Combustion Sources," Semi-Annual Report No. 5, Brookhaven National Laboratory, September 1977.

4. Dietz, Russell N., "Gas Chromatographic Determination of Nitric Oxide on Treated Molecular Sieve," *Anal. Chem.* **40**, 1576-8 (1968).

5. Small, Hamish; Stevens, Timothy S.; and Bauman, William C., "Novel Ion Exchange Chromatographic Method Using Conductimetric Detection," *Anal. Chem.* **47**, 1801-9 (1975).

6. Verhoff, F. H., and Banchero, J. T., "Predicting Dew Points of Flue Gases," *Chem. Eng. Prog.* **70**, (8), 71-2 (1974).

7. Dietz, Russell N., and Garber, Robert W., "Power Plant Flue Gas and Plume Sampling Studies," Brookhaven National Laboratory, BNL 25420, December 1978.

Copyright ASME International
Provided by IHS under license with ASME
No reproduction or networking permitted without license from IHS

Not for Resale

6.01.6

HYDROGEN SULFIDE IN AIR

Physical and Chemical Analysis Branch

Analytical Method

Analyte:	Hydrogen Sulfide	**Method No.:**	P&CAM 126
Matrix:	Air	**Range:**	0.008 ppm – 50 ppm
Procedure:	Absorption – Methylene Blue – Spectrophotometric	**Precision:**	Unknown
		Classification:	C (Tentative)
Date Issued:	6/9/72		
Date Revised:	1/15/74		

1. Principle of the Method

1.1 Hydrogen sulfide is collected by aspirating a measured volume of air through an alkaline suspension of cadmium hydroxide (Reference 11.1). The sulfide is precipitated as cadmium sulfide to prevent air oxidation of the sulfide which occurs rapidly in an aqueous alkaline solution. STRactan 10® is added to the cadmium hydroxide slurry to minimize photo-decomposition of the precipitated cadmium sulfide (Reference 11.2). The collected sulfide is subsequently determined by spectrophotometric measurement of the methylene blue produced by the reaction of the sulfide with a strongly acid solution of N, N-dimethyl-p-phenylenediamine and ferric chloride (References 11.3, 11.4, 11.5). The analysis should be completed within 24-26 hours following collection of the sample.

1.2 Hydrogen sulfide may be present in the open atmosphere at concentrations of a few ppb or less. The reported odor detection threshold is in the 0.7-8.4 $\mu g/m^3$ (0.5-6.0 ppb) range (References 11.6, 11.7). Concentrations in excess of 140 $\mu g/m^3$ (100 ppb) are seldom encountered in the atmosphere.

1.3 Collection efficiency is variable below 10 $\mu g/m^3$ and is affected by the type of scrubber, the size of the gas bubbles and the contact time with the absorbing solution and the concentration of H_2S (References 11.8, 11.9, 11.10).

2. Range and Sensitivity

2.1 This method is intended to provide a measure of hydrogen sulfide in the range of 1.1-100 $\mu g/m^3$. For concentrations above 70 $\mu g/m^3$ the sampling period can be reduced or the liquid volume increased either before or after aspirating. (This

Reprinted from N10SH Manual of Analytical Methods, Second Edition, U. S. Department of Health, Education, and Welfare, 1977.

Copyright ASME International
Provided by IHS under license with ASME
No reproduction or networking permitted without license from IHS
Not for Resale

method is also useful for the mg/m^3 range of source emissions. For example, 100 mℓ cadmium $(OH)_2$- STRactan 10® media in Greenberg-Smith impingers and 5 minute sampling periods have been used successfully for source sampling.) The minimum detectable amount of sulfide is 0.008 μg/mℓ, which is equivalent to 0.2 μg/m^3 in an air sample of 1 m^3 and using a final liquid volume of 25 mℓ. When sampling air at the maximum recommended rate of 1.5 ℓ/minute for 2 hours, the minimum detectable sulfide concentration is 1.1 μg/m^3 at 760 mm Hg and 25°C.

2.2 Excellent results have been obtained by using this method for air samples having a hydrogen sulfide content in the range 5-50 ppm.

3. Interferences

3.1 The methylene blue reaction is highly specific for sulfide at the low concentrations usually encountered in ambient air. Strong reducing agents (e.g., SO_2) inhibit color development. Even sulfide solutions containing several micrograms sulfide/mℓ show this effect and must be diluted to eliminate color inhibition. If sulfur dioxide is absorbed to give a sulfite concentration in excess of 10 μg/mℓ, color formation is retarded. Up to 40 μg/mℓ,of this interference, however, can be overcome by adding 2-6 drops (0.5 mℓ/drop) of ferric chloride instead of a single drop for color development, and extending the reaction time to 50 minutes.

3.2 Nitrogen dioxide gives a pale yellow color with the sulfide reagents at 0.5 μg/mℓ or more. No interference is encountered when 0.3 ppm NO_2 is aspirated through a midget impinger containing a slurry of cadmium hydroxide-cadmium sulfide-STRactan 10®. If H_2S and NO_2 are simultaneously aspirated through cadmium hydroxide-STRactan 10® slurry, lower H_2S results are obtained, probably because of gas phase oxidation of the H_2S prior to precipitation as CdS (Reference 11.10).

3.3 Ozone at 57 ppb reduced the recovery of sulfide previously precipitated as CdS by 15 per cent (Reference 11.10).

3.4 Sulfides in solution are oxidized by oxygen from the atmosphere unless inhibitors such as cadmium and STRactan 10® are present.

3.5 Substitution of other cation precipitants for the cadmium in the absorbent (i.e., zinc, mercury, etc.) will shift or eliminate the absorbance maximum of the solution upon addition of the acid-amine reagent.

3.6 Cadmium sulfide decomposes significantly when exposed to light unless protected by the addition of 1 per cent STRactan® to the absorbing solution prior to sampling (Reference 11.2).

Copyright ASME International
Provided by IHS under license with ASME
No reproduction or networking permitted without license from IHS

Not for Resale

3.7 The choice of impinger used to trap H_2S with the $Cd(OH)_2$ slurry is very important when measuring concentration in the range 5-50 ppm. Impingers or bubblers having fritted-end gas delivery tubes are a problem source if the sulfide in solution is oxidized by oxygen from the atmosphere to free sulfur. The sulfur collects on the fritted-glass membrane and may significantly change the flow rate of the air sample through the system. One way of avoiding this problem is to use a midget impinger with standard, glass-tapered tips.

4. Precision and Accuracy

4.1 A relative standard deviation of 3.5 per cent and a recovery of 80 per cent has been established with hydrogen sulfide permeation tubes (Reference 11.2).

5. Advantages and Disadvantages of the Method

5.1 Effect of Light and Storage – Disadvantage

5.1.1 Hydrogen sulfide is readily volatilized from aqueous solution when the pH is below 7.0. Alkaline, aqueous sulfide solutions are very unstable because sulfide ion is rapidly oxidized by exposure to the air.

5.1.2 Cadmium sulfide is not appreciably oxidized even when aspirated with pure oxygen in the dark. However, exposure of an impinger containing cadmium sulfide to laboratory or to more intense light sources produces an immediate and variable photo-decomposition. Losses of 50-90 per cent of added sulfide have been routinely reported by a number of laboratories. Even though the addition of STRactan 10® to the absorbing solution controls the photo-decomposition (Reference 11.2), it is necessary to protect the impinger from light at all times. This is achieved by the use of low actinic glass impingers, paint on the exterior of the impingers, or an aluminum foil wrapping.

6. Apparatus

6.1 **Sampling Equipment.** The sampling unit for the impinger collection method consists of the following components:

6.1.1 A graduated 25 mℓ midget impinger with a standard glass-tapered gas delivery tube containing the absorbing solution or reagent.

6.1.2 A pump suitable for delivering desired flow rates with a minimum capacity of 2 ℓpm through the impinger. The sampling pump is protected from splashover or water condensation by an adsorption tube loosely packed with a plug of glass wool and inserted between the exit arm of the impinger and the pump.

Copyright ASME International
Provided by IHS under license with ASME
No reproduction or networking permitted without license from IHS
Not for Resale

6.1.3 An integrating volume meter such as a dry gas or wet test meter. The air meter must be capable of measuring the air flow within ±2 per cent. A wet or dry gas meter, with contacts on the 1-feet^3 or 10-l dial to record air volume, or a specially calibrated rotameter, is satisfactory. Instead of these, calibrated hypodermic needles may be used as critical orifices if the pump is capable of maintaining greater than 0.7 atmospheric pressure differential across the needle (Reference 11.11).

6.1.4 Thermometer.

6.1.5 Manometer.

6.1.6 Stopwatch.

6.2 Associated laboratory glassware.

6.3 Colorimeter with red filter or spectrophotometer at 670 nm.

6.4 Matched cells, 1 cm path length.

7. Reagents

All reagents must be ACS analytical reagent quality. Distilled water should conform to the ASTM Standards for Referee Reagent Water.

All reagents should be refrigerated when not in use.

7.1 **Amine-sulfuric Acid Stock Solution.** Add 50 mℓ concentrated sulfuric acid to 30 mℓ water and cool. Dissolve 12 g of N, N-dimethyl-p-phenylenediamine dihydrochloride (para-aminodimethylaniline) (redistilled if necessary) in the acid. Do not dilute. The stock solution may be stored indefinitely under refrigeration.

7.2 **Amine Test Solution.** Dilute 25 mℓ of the Stock Solution to 1 liter with 1:1 sulfuric acid.

7.3 **Ferric Chloride Solution.** Dissolve 100 g of ferric chloride, $FeCl_3 \cdot 6H_2O$, in water and dilute to 100 mℓ.

7.4 **Ammonium Phosphate Solution.** Dissolve 400 g of diammonium phosphate, $(NH_4)_2HPO_4$, in water and dilute to 1 liter.

7.5 **STRactan 10®**, (Arabinogalactan) Available from Stein-Hall and Company, Inc., 385 Madison Avenue, New York, New York.

Copyright ASME International
Provided by IHS under license with ASME
No reproduction or networking permitted without license from IHS

Not for Resale

7.6 **Absorbing Solution.** Dissolve 4.3 g of $3CdSO_4 . 8 H_2O$, and 0.3 g sodium hydroxide in separate portions of water. Mix and add 10 g STRactan 10® and dilute to 1 liter. Shake the resultant suspension vigorously before removing each aliquot. The STRactan®-cadmium hydroxide mixture should be freshly prepared. The solution is only stable for 3 to 5 days.

7.7 **H_2S Permeation Tube.** Prepare or purchase a triple-walled or thick walled Teflon® permeation tube (References 11.10, 11.12, 11.13, 11.14, 11.15) which delivers hydrogen sulfide at a maximum rate of approximately 0.1 μg/minute at 25°C. This loss rate will produce a standard atmosphere containing 50 $\mu g/m^3$ (36 ppb H_2S when the tube is swept with a 2 ℓ/minute air flow. Tubes having H_2S permeation rates in the range of 0.004-0.33 μg/minute will produce standard air concentrations in the realistic range of 1-90 $\mu g/m^3$ H_2S with an air flow of 1.5 ℓ/min.

7.7.1 **Concentrated, Standard Sulfide Solution**

Transfer freshly boiled and cooled 0.1M NaOH to a liter volumetric flask. Flush with purified nitrogen to remove oxygen and adjust to volume. (Commercially available, compressed nitrogen contains trace quantities of oxygen in sufficient concentration to oxidize the small concentrations of sulfide contained in the standard and dilute standard sulfide standards. Trace quantities of oxygen should be removed by passing the stream of tank nitrogen through a Pyrex or quartz tube containing copper turnings heated to 400-450°C.) Immediately stopper the flask with a serum cap. Inject 300 mℓ of H_2S gas through the septum. Shake the flask. Withdraw measured volumes of standard solution with a 10 mℓ hypodermic syringe and fill the resulting void with an equal volume of nitrogen. Standardize with standard iodine and thiosulfate solution in an iodine flask under a nitrogen atmosphere to minimize air oxidation. The approximate concentration of the sulfide solution will be 440 μg sulfide/mℓ of solution. The exact concentration must be determined by iodine-thiosulfate standardization immediately prior to dilution.

For the most accurate results in the iodometric determination of sulfide in aqueous solution, the following general procedure is recommended:

1. Replace the oxygen from the flask by flushing with an inert gas such as carbon dioxide or nitrogen.

Copyright ASME International
Provided by IHS under license with ASME
No reproduction or networking permitted without license from IHS
Not for Resale

2. Add an excess of standard iodine, acidify, and back titrate with standard thiosulfate and starch indicator (Reference 11.16).

7.7.2 **Diluted Standard Sulfide Solution**

Dilute 10 mℓ of the concentrated sulfide solution to 1 liter with freshly boiled, distilled water. Protect the boiled water under a nitrogen atmosphere while cooling. Transfer the deoxygenated water to a flask previously purged with nitrogen and immediately stopper the flask. This sulfide solution is unstable. Therefore, prepare this solution immediately prior to use. This test solution will contain approximately 4 μg sulfide/mℓ.

8. Procedure

8.1 **Cleaning of Equipment.** All glassware should be thoroughly cleaned; the following procedure is recommended:

8.1.1 Wash with a detergent and tap water solution followed by tap water and distilled water rinses.

8.1.2 Soak in 1:1 or concentrated nitric acid for 30 minutes and then follow with tap, distilled, and double distilled water rinses.

8.2 **Collection and Shipping of Samples**

8.2.1 Pipet 10 mℓ of the absorbing solution (Section 7.6) into the midget impinger. The addition of 5 mℓ of 95 per cent ethanol to the absorbing solution just prior to aspiration controls foaming for 2 hours (induced by the presence of STRactan 10®. In addition, 1 or 2 Teflon demister discs may be slipped up over the impinger air inlet tube to a height approximately 1-2″ from the top of the tube.

8.2.2 Connect the impinger (via the absorption tube) to the vacuum pump with a short piece of flexible tubing. The minimum amount of tubing necessary to make the joint between the prefilter and impinger should be used. The air being sampled should not be passed through any other tubing or other equipment before entering the impinger.

8.2.3 Turn on pump to begin sample collection. Care should be taken to measure the flow rate, time and/or volume as accurately as possible. The sample should be taken at a flow rate of 1.5 ℓpm.

Copyright ASME International
Provided by IHS under license with ASME
No reproduction or networking permitted without license from IHS
Not for Resale

8.2.4 After sampling, the impinger stem can be removed and cleaned. Tap the stem gently against the inside wall of the impinger bottle to recover as much of the sampling solution as possible. Wash the stem with a small amount (1-2 mℓ) of unused absorbing solution and add the wash to the impinger. Then the impinger is sealed with a hard, non-reactive stopper (preferably Teflon). Do not seal with rubber. The stoppers on the impingers should be tightly sealed to prevent leakage during shipping. If it is preferred to ship the impingers with the stems in, the outlets of the stem should be sealed with Parafilm or other non-rubber covers, and the ground glass joints should be sealed (i.e., taped) to secure the top tightly.

8.2.5 Care should be taken to minimize spillage or loss by evaporation at all times. Refrigerate samples if analysis cannot be done within a day.

8.2.6 Whenever possible, hand delivery of the samples is recommended. Otherwise, special impinger shipping cases designed by NIOSH should be used to ship the samples.

8.2.7 A "blank" impinger should be handled as the other samples (fill, seal and transport) except that no air is sampled through this impinger.

8.3 **Analysis**

8.3.1 Add 1.5 mℓ of the amine-test solution to the midget impinger through the air inlet tube and mix.

8.3.2 Add 1 drop of ferric chloride solution and mix. (*Note:* See Section 3.1 if SO_2 exceeds 10 μg/mℓ in the absorbing media.)

8.3.3 Transfer the solution to a 25 mℓ volumetric flask. Discharge the color due to the ferric ion by adding 1 drop ammonium phosphate solution. If the yellow color is not destroyed by 1 drop ammonium phosphate solution, continue dropwise addition until solution is decolorized. Make up to volume with distilled water and allow to stand for 30 minutes.

8.3.4 Prepare a zero reference solution in the same manner using a 10 mℓ volume of absorbing solution, through which no air has been aspirated.

8.3.5 Measure the absorbance of the color at 670 nm in a spectrophotometer or colorimeter set at 100 per cent transmission against the zero reference.

Copyright ASME International
Provided by IHS under license with ASME
No reproduction or networking permitted without license from IHS
Not for Resale

9. Calibration and Standards

9.1 Aqueous Sulfide

9.1.1 Place 10 mℓ of the absorbing solution in each of a series of 25 mℓ volumetric flasks and add the diluted standard sulfide solution, equivalent to 1, 2, 3, 4, and 5 μg of hydrogen sulfide to the different flasks.

9.1.2 Add 1.5 mℓ of amine-acid test solution to each flask and mix.

9.1.3 Add 1 drop of ferric chloride solution to each flask. Mix, make up to volume and allow to stand for 30 minutes.

9.1.4 Determine the absorbance in a spectrophotometer at 670 nm, against the sulfide-free reference solution.

9.1.5 Prepare a standard curve of absorbance vs. μg H_2S/mℓ.

9.2 **Gaseous Sulfide.** Commercially available permeation tubes containing liquefied hydrogen sulfide may be used to prepare calibration curves for use at the upper range of atmospheric concentration. Triple-walled tubes, drilled rod and micro bottles which deliver hydrogen sulfide within a minimum range of 0.1-1.2 μg/minute at 25°C have been prepared by Thomas (Reference 11.10); O'Keeffe (References 11.12, 11.13); Scaringelli (References 11.14, 11.15). Preferably the tubes should deliver hydrogen sulfide within a loss rate range of 0.003-0.28 μg/minute to provide realistic concentrations of H_2S (1.5-140 μg/m³, 1.1-100 ppb) without having to resort to a dilution system to prepare the concentration range required for determining the collection efficiency of midget impingers. Analyses of these known concentrations give calibration curves which simulate all of the operational conditions performed during the sampling and chemical procedure. This calibration curve includes the important correction for collection efficiency at various concentrations of hydrogen sulfide.

9.2.1 Prepare or obtain a Teflon® permeation tube that emits hydrogen sulfide at a rate of 0.1-0.2 μg/minute (0.07-0.14 μℓ/minute at standard conditions of 25°C and 1 atmosphere). A permeation tube with an effective length of 2-3 cm and a wall thickness of 0.318 cm will yield the desired permeation rate if held at a constant temperature of 25°C ± 0.1°C. Permeation tubes containing hydrogen sulfide are calibrated under a stream of dry nitrogen to prevent the precipitation of sulfur in the walls of the tube.

9.2.2 To prepare standard concentrations of hydrogen sulfide, assemble the apparatus consisting of a water-cooled condenser, constant temperature bath maintained at 25°C ±0.1°C cylinders containing pure dry nitrogen

Copyright ASME International
Provided by IHS under license with ASME
No reproduction or networking permitted without license from IHS
Not for Resale

and pure dry air with appropriate pressure regulators, needle valves and flow meters for the nitrogen and dry air, diluent-streams. The diluent gases are brought to temperature by passage through a 2-meter-long copper coil immersed in the water bath. Insert a calibrated permeation tube into the central tube of the condenser, maintained at the selected constant temperature by circulating water from the constant-temperature bath, and pass a stream of nitrogen over the tube at a fixed rate of approximately 50 mℓ/minute. Dilute this gas stream to obtain the desired concentration by varying the flow rate of the clean, dry air. This flow rate can normally be varied from 0.2-15 ℓ/minute. The flow rate of the sampling system determines the lower limit for the flow rate of the diluent gases. The flow rate of the nitrogen and the diluent air must be measured to an accuracy of 1-2 per cent. With a tube permeating hydrogen sulfide at a rate of 0.1 μℓ/minute, the range of concentration of hydrogen sulfide will be between 6-400 $\mu g/m^3$ (4-290 ppb), a generally satisfactory range for ambient air conditions. When higher concentrations are desired, calibrate and use longer permeation tubes.

9.2.3 Procedure for Preparing Simulated Calibration Curves

Obviously one can prepare a multitude of curves by selecting different combinations of sampling rate and sampling time. The following description represents a typical procedure for ambient air sampling of short duration, with a brief mention of a modification for 24 hour sampling.

1. The system is designed to provide an accurate measure of hydrogen sulfide in the 1.4-84 $\mu g/m^3$ (1-60 ppb) range. It can be easily modified to meet special needs.

2. The dynamic range of the colorimetric procedure fixes the total volume of the sample at 186 ℓ; then, to obtain linearity between the absorbance of the solution and the concentration of hydrogen sulfide in ppm, select a constant sampling time. This fixing of the sampling time is desirable also from a practical standpoint: In this case, select a sampling time of 120 minutes. Then to obtain a 186 ℓ sample of air requires a flow rate of 1.55 ℓ/minute. The concentration of standard H_2S in air is computed as follows:

$$C = \frac{P_r \times M}{(R + r)}$$

Copyright ASME International
Provided by IHS under license with ASME
No reproduction or networking permitted without license from IHS
Not for Resale

where:

C = Concentration of H_2S in ppm
P_r = Permeation rate in μg/minute
M = Reciprocal of vapor density, 0.719 $\mu\ell/\mu$g
R = Flow rate of diluent air, liter/minute
r = Flow rate of diluent nitrogen, liter/minute

3. The data for a typical calibration curve are listed in Table 1.

TABLE 1

TYPICAL CALIBRATION DATA

Concentrations H_2S, ppb	Amount of H_2S in μl/186 liters	Absorbance of Sample
1	.144	.010
5	.795	.056
10	1.44	.102
20	2.88	.205
30	4.32	.307
40	5.76	.410
50	7.95	.512
60	8.64	.615

4. A plot of the concentration of hydrogen sulfide in ppm (x – axis) against absorbance of the final solution (y – axis) will yield a straight line, the reciprocal of the slope of which is the factor for conversion of absorbance to ppm. This factor includes the correction for collection efficiency. Any deviation from the linearity at the lower concentration range indicates a change in collection efficiency of the sampling system. If the range of interest is below the dynamic range of the method the total volume of air collected should be increased to obtain sufficient color within the dynamic range of the colorimetric procedure. Also, once the calibration factor has been established under simulated conditions the conditions can be modified so that the concentration of H_2S is a simple multiple of the absorbance of the colored solution.

Copyright ASME International
Provided by IHS under license with ASME
No reproduction or networking permitted without license from IHS

Not for Resale

5. For long-term sampling of 24-hour duration, the conditions can be fixed to collect 1200 ℓ of sample in a larger volume of STRactan 10®-cadmium hydroxide. For example, for 24 hours at 0.83 ℓ/min, approximately 1200 ℓ of air are scrubbed. An aliquot representing 0.1 of the entire amount of sample is taken for the analysis.

6. The remainder of the analytical procedure is the same as described in the previous paragraph.

9.2.4 The permeation tubes must be stored in a wide-mouth glass bottle containing silica gel and solid sodium hydroxide to remove moisture and hydrogen sulfide. The storage bottle is immersed to two-thirds its depth in a constant temperature water bath in which the water is controlled at 25°C ±0.1°C.

Periodically, (every 2 weeks or less) the permeation tubes are removed and rapidly weighed on a semimicro balance (sensitivity ±0.01 mg) and then returned to the storage bottle. The weight loss is recorded. The tubes are ready for use when the rate of weight loss becomes constant (within ±2 per cent).

10. Calculations

10.1 Gaseous Sulfide

10.1.1 Determine the sample volume in liters from the gas meter or flow meter readings and time of sampling. Adjust volume to 760 mm mercury and 25°C (V_s).

10.1.2 Determine the concentration of H_2S in $\mu g/m^3$.

$$\mu g\ H_2S/m^3 = \mu g\ H_2S/V_s \times 10^{-3}$$

where:

$\mu g\ H_2S$ = micrograms hydrogen sulfide determined
10^{-3} = conversion factor, m^3/ℓ

10.2 Gaseous Sulfide from Aqueous Sulfide

10.2.1 Determine the sample volume (V) in liters from the gas meter or flow meter readings and time of sampling. Adjust volume to 760 mm mercury and 25°C (V_s), using the correction formula:

Copyright ASME International
Provided by IHS under license with ASME
No reproduction or networking permitted without license from IHS
Not for Resale

$$V_s = V \times \frac{P}{760} \times \frac{298}{(T + 273)}$$

where:

V_s = Volume of air in liters at standard conditions
V = Volume of air sampled in liters
P = Barometric pressure in mm Hg
T = Temperature of sample air in °C

10.2.2 Using the Beers-Law Standard curve of absorbance vs. μg $S^=$ ion, determine μg $S^=$ ion in the sampling impinger corresponding to its absorbance reading at 670 nm.

10.2.3 Calculate the concentration of H_2S in the aspirated volume of air using the formula:

$$\text{ppm, } H_2S = \frac{\mu g\ S^= \times 24.45}{V_s \times MW}$$

where:

μg $S^=$ = micrograms sulfide ion (Section 10.2.2)
24.45 = molar volume of an ideal gas at 25°C and 760 mm Hg
MW = mass of sulfide ion, 32.06

11. References

11.1 Jacobs, M.B., Braverman, M.M., and Hochheiser, S. "Ultramicro determination of sulfides in air." Anal. Chem. 29; 1349 (1957).

11.2 Ramesberger, W.L., and Adams, D.F. "Improvements in the collection of hydrogen sulfides in cadmium hydroxide suspension." Environ. Sci. & Tech. 3; 258 (1969).

11.3 Mecklenburg, W., and Rozenkranzer, R. "Colorimetric determination of hydrogen sulfide." A. Anorg. Chem. 86; 143 (1914).

11.4 Almy, L.H. "Estimation of hydrogen sulfide in proteinaceous food products." J. Am. Chem. Soc. 47; 1381 (1925).

11.5 Sheppard, S.E., and Hudson, J.H. "Determination of labile sulfide in gelatin and proteins." Ind. Eng. Chem., Anal. Ed. 2; 73 (1930).

Copyright ASME International
Provided by IHS under license with ASME
No reproduction or networking permitted without license from IHS
Not for Resale

11.6 Adams, D.F., Young, F.A., and Luhr, R.A. "Evaluation of an odor perception threshold test facility." Tappi. 51; 62A (1968).

11.7 Leonardos, G., Kendall, D., and Barnard, N. "Odor threshold determinations of 53 odorant chemicals." J. Air Pollut. Contr. Assoc. 19; 91 (1969).

11.8 Bostrom, C.E. "The absorption of sulfur dioxide at low concentrations (ppnm) studied by an isotopic tracer method." Air & Water Pollut. Int. J. 9; 333 (1965).

11.9 Bostrom, C.E. "The absorption of low concentrations (ppnm) of hydrogen sulfide in a $Cd(OH)_2$ suspension as studied by an isotopic tracer method." Air & Water Pollut. Int. J. 10; 435 (1966).

11.10 Thomas, B.L., and Adams, D.F. Unpublished information.

11.11 Lodge, J.P., Pate, J.B., Ammons, B.E., Swanson, G.A. "The use of hypodermic needles as critical orifices." J. Air Poll. Control Assoc. 16; 197 (1966).

11.12 O'Keeffe, A.E., and Ortman, G.C. "Primary standards for trace gas analysis." Anal. Chem. 38; 760 (1966).

11.13 O'Keeffe, A.E., and Ortman, G.C. "Precision picogram dispenser for volatile substances." Anal. Chem. 39; 1047 (1967).

11.14 Scaringelli, F.P., Frey, S.A., and Saltzman, B.E. "Evaluation of Teflon permeation tubes for use with sulfur dioxide." Am. Ind. Hyg. Assoc. J. 28; 260 (1967).

11.15 Scaringelli, F.P., Rosenberg, E., and Rehme, K. "Stoichiometric comparison between permeation tubes and nitrite ion as primary standards for the colorimetric determination of nitrogen dioxide." Presented before the Division of Water, Air and Waste Chemistry of the American Chemical Society, 157th National Meeting, Minneapolis, Minn., April 1969.

11.16 Kolthoff, I.M., and Elving, P.J., Eds. *Treatise on Analytical Chemistry*, Part II, Analytical Chemistry of the Elements, V. 7. Interscience Publishers, New York, 1961.

11.17 Bock, R., and Puff, H.J. "Bestimmung von sulfid mit einer sulfidionenempfindlichen elektrode." Z Anal. Chem. 240; 381 (1968).

11.18 424202-01-70T "Tentative Method of Analysis for Hydrogen Sulfide Content of the Atmosphere," *Methods of Air Sampling and Analysis*, APHA, Inc. Washington, D.C., 1972.

Copyright ASME International
Provided by IHS under license with ASME
No reproduction or networking permitted without license from IHS
Not for Resale

6.02 Instrumental Methods of Analysis

6.02.1 Paramagnetic Attraction Oxygen Analyzer

6.02.1.1 Oxygen is one of the few gases which is attracted to a magnetic field, or is paramagnetic. The mass susceptibility of a paramagnetic gas varies inversely as the absolute temperature. As a result of this temperature coefficient of paramagnetic susceptibility, it is possible to induce and sustain a flow of paramagnetic gas in a confined system by properly combining a magnetic field gradient and a thermal gradient. The intensity of the gas flow produced is dependent upon the oxygen concentration in the gas sample. Changes in the intensity of the magnetically induced gas flow are then used as a measure of the concentration of the O_2 content. The intensity of the gas flow is measured by the effect produced on the resistance of a temperature-sensitive element.

6.02.1.2 Commercially available paramagnetic oxygen analyzers typically have accuracies of ± 0.15 percent O_2 or 1½ percent of span, ranges of 0 to 10 percent and 0 to 20 percent, and require no sample gas for calibration. Warm-up time is up to 24 hours. The gas sample should be free of particulates and condensibles and have a temperature less than 100° F.

6.02.2 Zirconia Diffusion Cell

6.02.2.1 The process measures oxygen partial pressure using a high temperature stabilized zirconium oxide cell. At operating temperature, oxygen molecules on the high oxygen pressure side of the cell (cathode) gain electrons to become ions which enter the electrolyte. Simultaneously, at the other electrode (anode), oxygen molecules are formed by the reverse reaction. For cells operating at about 850°C, the standard Nernst equation for an oxygen cell is:

$$EMF = 55 \log_{10} \frac{P_B}{P_A}$$

Where: P_A = the partial pressure of oxygen within the cell.

P_B = the partial pressure of oxygen in the atmosphere (equal to a constant 20.95 percent oxygen).

6.02.2.2 The cell output is specific to O_2 and is not affected by CO_2 or changes in barometric pressure. However, hydrocarbons, hydrogen and other combustibles will burn at the operating temperature and result in an indication of less oxygen than is actually present. If the combustibles present are small in relation to the oxygen, the error will be small.

6.02.2.3 Ambient humidity will affect the reading slightly through changes in the partial pressure of ambient oxygen but this is readily compensated for. The cell is inserted into the exhaust stream and is suitable for temperatures up to 1400 F (760 C). The output indicates the true, wet oxygen concentration of the exhaust. The sensitivity increases at lower oxygen concentrations as can be seen in the Nernst equation where lower concentrations result in higher EMF output.

6.02.3 Electrochemical Membrane Diffusion

6.02.3.1 An integrated gas sample flows across a membrane. Some of the molecules diffuse through a membrane and dissolve into a thin liquid layer of electrolyte. The dissolved species diffuse to the surface of a sensing electrode where they are absorbed and experience electro-oxidation or electro-reduction. An opposite reaction occurs at a counter-electrode. Connecting the sensing electrode with the counter-electrode through an appropriate electrolyte results in the flow of an electric current. The electric current flow is directly proportional to the partial pressure of the pollutant in the gas sample and is suitable for amplification and display.

6.02.3.2 Proper selection of electrolyte, membrane, sensing electrode, and counter-electrode allows this type of process to be specific to one of several different gases. This type of process can be used to determine concentrations of O_2, CO, NO_2, H_2S and SO_2. Commercial instruments typically have ranges available from 0-5 ppm to 0-5000 ppm. Typical accuracy is ± 1 percent of full scale, while sensitivity is 1 percent of full scale. The sample should have no particulates, a relative humidity between 40 and 80 percent, an ambient temperature of less than 100°F, a steady flow rate between 0.5 and 2.0 SCFH and a pressure slightly above atmospheric before entering the sensor cell as the sensor exhausts to the atmosphere.

6.02.3.3 There can be mutual interferences but compensation for these can be made in some instruments by internal electrical adjustments. Otherwise, gas scrubbers must be inserted into the sample stream before the instrument to remove interfering species.

6.02.4 Catalytic Combustion

6.02.4.1 In the catalytic combustion process, an exothermic reaction of oxygen, in a sample gas, with hydrogen or a hydrocarbon gas takes place on a catalytic filament. This process can be used for either the measurement of oxygen or combustible gases. The filament forms one leg of a bridge circuit. No combustion takes place when no oxygen exists in the gas sample and the bridge remains balanced. The heat of combustion and the resulting change in the resistance of the filament are proportional to either

Copyright ASME International
Provided by IHS under license with ASME
No reproduction or networking permitted without license from IHS
Not for Resale

the amount of oxygen or the amount of combustibles in the gas sample.

6.02.4.2 Commercially available catalytic combustion oxygen analyzers typically have accuracy of ± 0.15 percent up to 15 percent O_2 and ± 1 percent of the reading above 15 percent O_2. The instrument requires several calibration gases with various O_2 concentrations. The instrument requires the sample gas to be free of SO_2 and particulates, and have a moisture content below the dew point.

6.02.5 Non-Dispersive Infrared Spectroscopy (NDIR)

6.02.5.1 In a typical application, radiation from a broadband infrared source is passed simultaneously through a reference cell containing either air or nitrogen and a measuring cell containing a moisture-free and particulate-free flue gas sample. Attenuation of infrared energy by the gaseous compound in the sample chamber is detected by two compartments, one for each infrared beam, separated by a flexible diaphragm. These compartments contain the gaseous compound being determined in the flue gas sample. Absorption of the infrared energy by the detector leads to heating and expansion, thus creating a pressure differential proportional to the absorption of the sample. The pressure differential is converted into an electrical signal suitable for amplification and display.

6.02.5.2 This process can be used for measuring CO, CO_2, and SO_2. Hydrocarbons can be measured with the exception of methane and acetylene.

6.02.5.3 Interference can be caused by water vapor or CO_2 in the flue gas sample. The water interference can be compensated for by either drying the sample stream (dew point < -17.8°C) or by maintaining a constant water vapor in the sample and calibration gases. Typical commercially available NDIR instruments have 0 to 1000 ppm range, ±2 percent accuracy, 20 ppm sensitivity or less, zero drift and span drift of ±1 percent in 24 hours, and they operate in ambient temperature from 30 to 120°F, (-1°C to 49°C). CO_2 interference can be minimized through the use of band-pass filter.

6.02.6 Flame Ionization Detection (FID)

6.02.6.1 A gas sample containing hydrocarbons is fed into a hydrogen-fueled flame in an ionization chamber. The high flame temperature ionizes the hydrocarbon molecules causing the gas to become electrically conductive. The electric current established between two electrodes located above the flame is directly proportional to the hydrocarbon concentration in flame; the current is available for amplification, display, and recording.

6.02.6.2 The magnitude of the amplified signal indicates the number of carbon atoms passing through the flame so that instrument readouts can be reported in terms of CH_4 (methane) equivalent. If hydrocarbon monitoring requires excluding methane or measuring its concentration independently, a gas chromatograph can be used to separate methane, other hydrocarbons and carbon monoxide. The concentration of each can then be determined by flame ionization detection. While the FID is inherently insensitive to CO, it can be measured by first reducing it to methane in a catalytic converter.

6.02.6.3 Commercially available FID instruments typically have ranges from 0-1 ppm to 0-1000 ppm and ±1 percent full scale accuracy. The sample should be particulate-free and heated sample lines should be used for stack tests to minimize the possibility of condensing hydrocarbons.

6.02.7 Chemiluminescence

6.02.7.1 Chemiluminescence is based on reacting the sample gas flow with a gaseous reactant which causes a light-emitting reaction. Ideally, the light emitted by the reaction should be emitted only by the gaseous species being determined or be easily separable from the rest of the emitted spectrum optically. A photomultiplier (PM) tube is used to monitor the spectrum of interest and convert it to an electrical signal. The photomultiplier tube output is amplified and then displayed or recorded. This method is applicable to the determination of NO, NO_2, and SO_2.

6.02.7.2 In a typical application, NO is measured by its reaction with O_3 to form O_2 and electrically excited NO_2. Light is emitted when the electrically excited NO_2 molecules revert to their ground state. This chemiluminescence is monitored by a PM tube through an optical filter. Interference is eliminated as the filter-PM tube combination is responsive only to the wavelength of light unique to the $NO + O_3$ reaction. To measure NO_x concentrations, the sample flow is diverted through a NO_2 to NO converter. The chemiluminescence response to the converter effluent is linearly proportional to the NO_x concentration. The efficiency of the converter must be checked periodically to insure at least 96 percent conversion. A typical instrument has eight ranges sensitive from 0.05 to 10,000 ppm. The accuracy is dependent upon NO calibration gas while the precision of span setting is ± 0.5 percent. While CO_2 causes no response in the instrument, it interferes with the

Copyright ASME International
Provided by IHS under license with ASME
No reproduction or networking permitted without license from IHS

Not for Resale

NO chemiluminescence reaction. For this reason, in application where high CO_2 concentrations are expected, the calibration gases should be blended to include CO_2. The analyzer requires the sample to be less than 100°F and have no particulates or moisture.

6.02.8 *Visible Photometry and Non-Dispersive Ultraviolet Photometry*

6.02.8.1 Certain gases absorb visible or ultraviolet light energy. Radiation absorption in the visible and UV wavelength range from 0.2 to 0.8μ is used as a measuring effect. In a photometer, a light source emits radiation in a specific wavelength. The radiation is collimated by a lens and conducted through a cuvette where some of the radiation is absorbed by the sample gas. After leaving the cuvette, the radiation is split into two portions by means of a grated mirror. One portion becomes the reference beam and passes through a preselected reference filter while the other portion becomes the measuring beam and passes through a measuring filter. Both beams pass through a modulator and are reflected to a second grated mirror where they are joined and focused through another lens. This lens directs the beam to a photometric receiver which measures the absorption of the measuring beam compared to the absorption of the reference beam. The difference in absorption of the two beams is converted into a readable signal output. By the proper choice of radiation wavelength, reference filter, and measuring filter, this method can be used to determine the concentration of NO, NO_2, SO_2, or SO_3.

6.02.8.2 The several available types of split-beam photometric analyzers use the same principle but operate differently. In one instrument which measures NO_x concentrations, the NO in a sample is first quantitatively converted to NO_2 using pressurized oxygen and then measured as NO_2. A typical range of available instruments is 0 to 2000 ppm for measuring NO_2.

6.02.8.3 The sample requirements vary for the different types of photometers. In one type, the sample gas continuously flows through the analyzer. In another type, the NO gas in the sample is changed to NO_2 before the sample is analyzed. In general, when the sample is analyzed in a gaseous state, the sample must be free of particulates and the temperature of the sample should remain high enough to prevent condensation. Many of the in-situ spectrometric methods can be applied to extractive system by either including a detector cell in a probe located in the stack or by passing the exhaust sample through a cell located externally to the stack.

6.02.9 *Electrolytic Titration*

6.02.9.1 In this process, a gas sample continuously passes through a titration cell at a constant flow rate. Electrical current flows through the titration cell which generates bromine from a hydrogen bromide solution. The electric current is automatically adjusted by a control module to produce just enough bromine to react with the sulfur compounds in the sample and thus maintain a predetermined end-point condition. The amount of current required to maintain the end-point condition is proportional to the concentration of sulfur compounds in the sample. The principle is one of oxidation and reduction so it is subject to interference from any species that either oxidize or reduce.

6.02.9.2 This process is used to determine the concentration of sulfur dioxide, hydrogen sulfide, and organic sulfides by using an appropriate absorption train prior to the instrument. The sample train must be heated to the point where moisture is removed from the sample and must include a filter to remove particulate matter. The filter must be purged periodically to prevent plugging.

6.02.10 *Pulsed Ultraviolet Fluorescence*

6.02.10.1 A gas sample is submitted to a source of pulsed ultraviolet illumination through a monochromatic filter. SO_2 molecules, energized by the high intensity pulsed light source emit an SO_2 specific illumination, which passes through a narrow band filter and impinges upon the sensitive surface of a photomultiplier tube. The emitted light is linearly proportional to the concentration of SO_2 molecules in the sample. Electronic solid state amplification of the photo multiplier tube output and signal conditioning for the elimination of signal noise provide a meter reading and an electronic analog signal for recorder output.

6.02.10.2 The instrument requires the sample to be free of particulate and condensed moisture. The minimum detectable concentration is 1.0 ppm.

6.02.11 *Flame Photometry*

6.02.11.1 Certain compounds emit electromagnetic light radiation (luminesce) when they are burned. In the flame photometry method of determining the sulfur concentration in an exhaust gas, a sample of the gas is burned in a hydrogen-rich flame. The wavelength of the emitted light is characteristic of sulfur. Interference from non-sulfur

Copyright ASME International
Provided by IHS under license with ASME
No reproduction or networking permitted without license from IHS
Not for Resale

compounds is minimized by using a narrow band filter of 394 nanometers. The intensity of the sulfur emission line is sensed by a photomultiplier tube. The photomultiplier tube output is logarithmically proportional to the sulfur concentration in the sample gas and is readily available for amplification and display. The main problem with this method is that it cannot distinguish between SO_2, H_2S, organic sulfides, and other sulfur compounds. They can be distinguished by coupling the flame photometer to a gas chromatograph.

6.02.11.2 Commercially available instruments using flame photometry typically have a range from 100 ppb to 100 ppm and accuracy of ± 2 percent. This type of instrument is sensitive to small variations of temperature, gas pressure and flow.

6.03 Calculations

6.03.1 Symbols and Description

Symbol	Description	Unit
A	Air	...
A.F.	As Fired	...
A_θ'	Theoretical quantity of dry air required for complete combustion of the fuel	lb per lb of A.F. fuel
A_X'	Excess air is the actual quantity of air used minus the theoretical air required divided by the theoretical air and expressed as a percentage	percent
b	Burned	...
C	Pounds of carbon per pound of "as fired" fuel (laboratory analysis)	lb/lb A.F. fuel
C_b	Pounds of carbon burned per pound of "as fired" fuel ($C_b = C - C_u$).	lb/lb A.F. fuel
C_u	Pounds of unburned carbon per pound of "as fired" fuel	lb/lb A.F. fuel
CO	Percent carbon monoxide per volume of dry flue gas. Determined by flue gas analysis	percent
CO_2	Percent of carbon dioxide per volume of dry flue gas. Determined by flue gas analysis	percent
$CO_{2,FG}$	Carbon dioxide in products of combustion	$\frac{ft^3}{lb\ A.F.\ fuel}$
e	Pressure corresponding to saturated vapor pressure at dew point temperature	in. Hg
H	Pounds of hydrogen, exclusive of that in moisture, per pound of "as fired" fuel. (Laboratory analysis.)	lb/lb A.F. fuel

Copyright ASME International
Provided by IHS under license with ASME
No reproduction or networking permitted without license from IHS
Not for Resale

6.03.1 (Cont'd)

Symbol	Description	Unit
H_2	Hydrogen content of the flue gas	percent or ppm
H'''_{dp}	Heat value for total dry fuel dust and ashpit refuse as determined by laboratory analysis	Btu/lb
HHV	Higher heating value of fuel	Btu/lb
MA	Mol of air required to provide "% O_2" excess oxygen in the flue gas	...
M_{DP}	Total mol of dry products of combustion at stoichiometric conditions	...
M_{N_2}	Mol of N_2 added to the products of combustion at stoichiometric conditions	...
M_{O_2}	Mol of O_2 needed for stoichiometric conditions	...
M_s	Mol of measured species	...
M_{WP}	Total mol of wet products of stoichiometric conditions	...
MW_s	Molecular weight of species	...
N	Pounds of nitrogen per pound of "as fired" fuel as determined by laboratory analysis	lb/lb A.F. fuel
N_2	Percent nitrogen per volume of dry flue gas as determined by flue gas analysis	percent
$N_{2,FG}$	Nitrogen in products of combustion	$\frac{ft^3}{lb\ A.F.\ fuel}$
O	Pounds of oxygen per pound of "as fired" fuel as determined by laboratory analysis	lb/lb A.F. fuel
$O_{2,FG}$	Oxygen in products of combustion	$\frac{ft^3}{lb\ A.F.\ fuel}$
$O_{2\alpha}$	Percent oxygen basis, per volume of dry flue gas, to which a pollutant concentration is converted	percent
P_a	Barometric pressure	in. Hg
ppm	Concentration of a pollutant as determined by flue gas analysis	parts per million

Copyright ASME International
Provided by IHS under license with ASME
No reproduction or networking permitted without license from IHS

Not for Resale

6.03.1 (Cont'd)

Symbol	Description	Unit
ppm_{α}	Concentration of a pollutant when converted to a standard O_2 basis	parts per million
S	Pounds of sulfur per pound of "as fired" fuel as determined by laboratory analysis	lb/lb A.F. fuel
SO_2	Concentration of sulfur dioxide per volume of dry flue gas as determined by flue gas analysis	percent or ppm
$SO_{2,FG}$	Sulfur dioxide in products of combustion	$\frac{ft^3}{lb\ A.F.\ fuel}$
SO_3	Concentration of sulfur trioxide per volume of dry flue gas as determined by flue gas analysis	percent or ppm
U	Unburned	...
W_A'	Pounds of dry air supplied per pound of "as fired" fuel	lb/lb A.F. fuel
W_m	Pounds of moisture in the flue gas per pound of dry fuel	lb/lb A.F. fuel
$W_{d\,p}''$	Pounds of total dry flue dust and ashpit refuse per pound of "as fired" fuel	lb/lb A.F. fuel
W_1	Pounds of dry gas per pound of "as fired" fuel	lb/lb A.F. fuel
w_1	Pounds of moisture per pound of "as fired" fuel	lb/lb A.F. fuel
w_2	Pounds of moisture formed by burning hydrogen per pound of dry fuel	lb/lb dry fuel
w_3	Pounds of moisture per pound of dry air	lb/lb dry air
X	Excess	...
θ	Theoretical	...
$'$ (Prime)	Dry	...

Copyright ASME International
Provided by IHS under license with ASME
No reproduction or networking permitted without license from IHS
Not for Resale

6.03.2 Metric Conversion Factors

To Obtain	From	Multiply by
ng/J	lb/10^6 Btu	4.299226 E+02
kg/sec	10^3 lb/hr	1.259979 E-01
MJ/sec	10^6 Btu/hr	2.930711 E-01
J/g	Btu/lb	2.326000 E+00
kN/m^2	psig	6.894757 E+00
kN/m^2	in. Hg	3.387464 E+00
°C = (°F − 32) (5/9)		

6.03.3 Calculations

6.03.3.1 This section presents the calculations necessary to determine the moisture in the flue gas, the weight of the flue gas, the weight of dry air supplied per pound of fuel and excess air from measured O_2 and the fuel analysis; also presented are methods for the conversion of measured emissions to a different O_2 basis and the conversion of emissions concentrations from ppm to lb/10^6 Btu. An equation is also presented for calculating the percentage excess air based only on the flue gas analysis.

6.03.3.2 The results of the Orsat analysis are given on a dry basis, even though the gas samples were moisture saturated. Results are expressed in percent by volume. However, the results are normally re-expressed in weights for use in the calculations and when a unit of fuel is used as a basis, the results are expressed on a dry-fuel basis. The flue gas analysis can be used for heat balance determinations, as described in ASME Performance Test Code 4.1 (Steam Generating Units).

6.03.4 Moisture Determinations

6.03.4.1 Moisture in the flue gas normally comes from three sources: free moisture in the fuel, moisture from burning hydrogen in the fuel, and humidity in the air supplied for combustion. Let w_1 equal the pounds of moisture per pound of as fired fuel, as determined by the fuel analysis. Let w_2 equal the pounds of moisture formed by burning hydrogen per pound of as fired fuel.

$$w_2 = 8.936H$$

Where: H = Pounds of hydrogen per pound of "as fired" fuel.

6.03.4.2 Further, let w_3 equal the pounds of moisture per pound of dry air contained in the air supplied to burn the fuel. This moisture may be determined by using a sling-type psychrometer to measure wet and dry-bulb temperatures, and a psychrometric chart. Refer to PTC Instruments and Apparatus, Part 18, "Humidity Determinations" (Fig. 9). Moisture in the air may also be determined by using the psychrometric tables published in U.S. Weather Bureau Bulletin No. 235, which gives the dew point temperature and the corresponding saturated vapor pressure expressed in inches of mercury, as follows:

$$w_3 = \frac{e}{P_a - e} \times \frac{18}{29}$$

Where: e = Pressure corresponding to saturated vapor pressure at dew point temperature, inches of mercury.

P_a = Barometric pressure, inches of mercury.

6.03.4.3 The pounds of water vapor in the flue gas per pound of "as fired" fuel is:

$$W_m = w_1 + w_2 + W_A{}' w_3$$

Where: $W_A{}'$ is the pounds of dry air per pound of as fired fuel and is calculated in Par. 6.03.6.2.3.

6.03.4.4 The pounds of moisture per pound of dry flue gas is:

$$\frac{W_m}{W_1}$$

Where: W_1 is the pounds of dry flue gases per pound of as fired fuel and is calculated in Par. 6.03.5.1.

6.03.4.5 The above method for moisture determination is satisfactory when the moisture is produced from the three sources stated. However, when there is additional moisture pickup from leaks or from a dust eliminator, direct determinations from samples of the flue gas are necessary. For this purpose, wet and dry bulb measurements at flue temperatures give inaccurate results. The

Copyright ASME International
Provided by IHS under license with ASME
No reproduction or networking permitted without license from IHS

Not for Resale

chemical method described in PTC Instruments and Apparatus, Part 18, "Humidity Determinations," Pars. 41-50, shall be used. The symbols in the description refer to air determinations, but may be used to refer to flue gas determinations. In this case a static pressure indicator and thermometer shall be installed at a point between the flue and absorption train. Also, the filter cartridge described shall be replaced by a glass wool cartridge. The sampling method shall follow that described in Section 3 of this Supplement. When starting the test, the time shall be noted. The thermometers and pressure indicators shall be read at regular intervals. If the single sampling tube is used, the cross-sectional area of the flue shall be probed, spending an equivalent period at each sampling point.

6.03.4.6 At the end of the test, the time shall be noted. All absorption tubes, except the one nearest the meter, shall be removed and weighed. The difference in weight at the end and start of test is the weight of moisture contained in the sample of gas which is measured by the meter. Results are corrected and reported as indicated in PTC Instruments and Apparatus, Part 18, Par. 48.

6.03.5 Weight of Gases

6.03.5.1 The weight, W_1, of dry flue gases per pound of "as fired" fuel may be calculated from the following equation:

$$W_1 = \frac{(44.01\,CO_2 + 32.00\,O_2 + 28.02\,N_2 + 28.01\,CO)}{12.01\,(CO_2 + CO)}\left(C_b + \frac{12.01\,S}{32.07}\right)$$

Where: $W_1 = \dfrac{\text{lb dry gas}}{\text{lb A.F. fuel}} =$ Pounds of dry gas per pound of "as fired" fuel.

CO_2, O_2 and CO = Percent by volume of dry flue gas.

N_2 is determined by subtracting the total percentage of CO_2, O_2 and CO from 100 percent.

$S = \dfrac{\text{lb}}{\text{lb A.F. fuel}} =$ Pounds of sulfur per pound of "as fired" fuel as determined by laboratory analysis.

$C_b = \dfrac{\text{lb carbon burned}}{\text{lb A.F. fuel}} =$ Pounds of carbon burned per pound of "as fired" fuel, and is calculated from:

$$C_b = C - C_u = C - \frac{W_d{}'_p{}' \times H_d{}'_p{}'}{14500}$$

Where:

$C = \dfrac{\text{lb carbon}}{\text{lb A.F. fuel}} =$ Pounds of carbon in "as fired" fuel by laboratory analysis

$C_u = \dfrac{\text{lb unburned carbon}}{\text{lb A.F. fuel}} =$ Pounds of unburned carbon per pound of "as fired" fuel.

$W_d{}'_p{}' = \dfrac{\text{lb dry refuse}}{\text{lb A.F. fuel}} =$ Pounds of total dry flue dust and ashpit refuse per pound of "as fired" fuel.

$H_d{}'_p{}' = \dfrac{\text{Btu}}{\text{lb dry refuse}} =$ Heat value for total dry flue dust and ashpit refuse from laboratory determination.

$14500 = \dfrac{\text{Btu}}{\text{lb}} =$ Heat value of 1 lb of carbon as it occurs in refuse.

6.03.5.2 The preceding formula is based on molecular weights accurate to four significant figures; but it is not to be implied that the dry gas loss has this degree of accuracy. The four digit molecular weights are used to hold errors from calculation procedures to a minimum. The values used from the National Bureau of Standards Circular 564, dated November 1, 1955.

6.03.5.3 For most fuels, the sulfur term may be neglected. However, for coal which is relatively high in sulfur and low in carbon, the factor becomes appreciable. The CO_2 measurement by Orsat includes SO_2. However, the quantity of sulfur in most fuels is so small that the results of the equations are sufficiently accurate.

6.03.6 Excess Air Determinations

6.03.6.1 Several equations based on various methods have been derived to determine excess air depending on the data collected and the class of fuel. Do not use a particular equation without knowing the assumptions made in its derivation.

6.03.6.2.1 (1) Excess Air Based on Fuel Analysis, O_2, CO_2 and CO

The first method to determine excess air is based on the fuel analysis and the flue gas analysis for content of O_2, CO_2 and CO. This is the most general method and can be used for any fuel. The equation for this method is:

$$A_x{}' = 100\left[\frac{W_a{}' - A_\theta{}'}{A_\theta{}'}\right]$$

Where: $A_x{}'$ = Excess air, percent

$A_\theta{}'$ = Weight of theoretical dry air, $\dfrac{\text{lb dry air}}{\text{lb A.F. fuel}}$

Copyright ASME International
Provided by IHS under license with ASME
No reproduction or networking permitted without license from IHS
Not for Resale

W_A' = Weight of dry air supplied per lb of fuel, $\frac{\text{lb dry air}}{\text{lb A.F. fuel}}$

6.03.6.2.2 The weight of theoretical dry air per pound is "as fired" fuel is based on the fuel analysis and is calculated by the following equation:

$$A_\theta' = 11.51\,C_b + 34.3\left[H - \frac{0}{7.937}\right] + 4.335\,S$$

6.03.6.2.3 The weight of dry air per pound of "as fired" fuel W_A', is calculated from the following equation, assuming all fuel and air supplied go to the flue gas:

$$W_A' = W_1 + 8\,(H - O) - C_b - S - N$$

Where:

$W_A' = \frac{\text{lb dry air supplied}}{\text{lb A.F. fuel}}$

$W_1 = \frac{\text{lb dry flue gas}}{\text{lb A.F. fuel}}$ (Calculated in previous section).

H, O, C_b, S, N } Described in previous section.

6.03.6.3.1 **(2) Excess Air Based on O_2, CO_2, CO and N_2 (by Difference)**

When an accurate ultimate analysis of fuel or an accurate determination of unburned carbon in the flue dust and ashpit refuse are not available, the above method of calculating excess air cannot be used. The percentage excess air, A_X', based only on the flue gas analysis, can be calculated from the following equation:

$$A_X' = 100\left[\frac{O_2 - \frac{CO}{2}}{0.2682N_2 - \left(O_2 - \frac{CO}{2}\right)}\right]$$

6.03.6.3.2 This equation is approximate and can be used only on fuels having low nitrogen content such as coal, wood, oil, and natural gas. It should not be used on coke oven gas, blast furnace gas, or similar fuels which are produced by a previous combustion process and, therefore, contain a substantial quantity of nitrogen. It is particularly applicable in connection with internal combustion engine tests.

6.03.6.4 **(3) Excess Air Based on O_2, CO_2 and CO Using a Graph**

Figure 15 is a chart which has been developed to show the approximate excess air based upon the measurements of O_2, CO, and CO_2 for various fuels of known composition. For a given fuel, the points will lie along a straight line from the pivot point through the chart to the point for the measured CO_2 and CO. Hence, the chart is valuable for a check on the accuracy of a given gas analysis. When the CO_2, O_2 and CO contents of a gas have been determined, the percent total air can be read from the chart to a close approximation, except as noted on the chart for products of combustion of producer gas or of blue or carburated water gas. The percent excess air is then obtained by subtracting 100 percent from this percentage of total air. As the excess air for any given CO_2 content of combustion gases varies widely with fuels of different carbon-hydrogen ratios, and with the presence of CO, H_2 or CH_4, the estimation of excess air from the CO_2 content only cannot be accurate. For one fuel of constant composition with no unburned combustibles, a simple curve, relating the excess air to the CO_2, can be prepared for that fuel and used with confidence. If combustion is complete, Fig. 15 and an O_2 determination are sufficient for obtaining the approximate excess air. Since the percent total air lines are nearly parallel to the $CO_2 + O_2$ coordinate, variations in fuel composition have little effect on the accuracy of the total air determined on the basis of O_2 in the flue gas.

6.03.6.5.1 **(4) Excess Air Based on Fuel Analysis and O_2 (Neglects CO)**

Another method to determine excess air is based on only the fuel analysis and the O_2 content of the flue gas. This method does not take into account the CO in flue gas and cannot be used for firing systems which produce significant quantities of CO. The equation for this method (derived in Par. 6.04) is:

$$A_X' = 100\left\{\frac{(O_2/100)(31.32C_b + 11.528S + 13.443N + 10.331A_\theta')}{A_\theta'\left(2.73 - 13.068\,\frac{O_2}{100}\right)}\right\}$$

Where:

$$A_\theta' = 11.51C_b + 34.3\left(H - \frac{0}{7.937}\right) + 4.335S$$

Copyright ASME International
Provided by IHS under license with ASME
No reproduction or networking permitted without license from IHS
Not for Resale

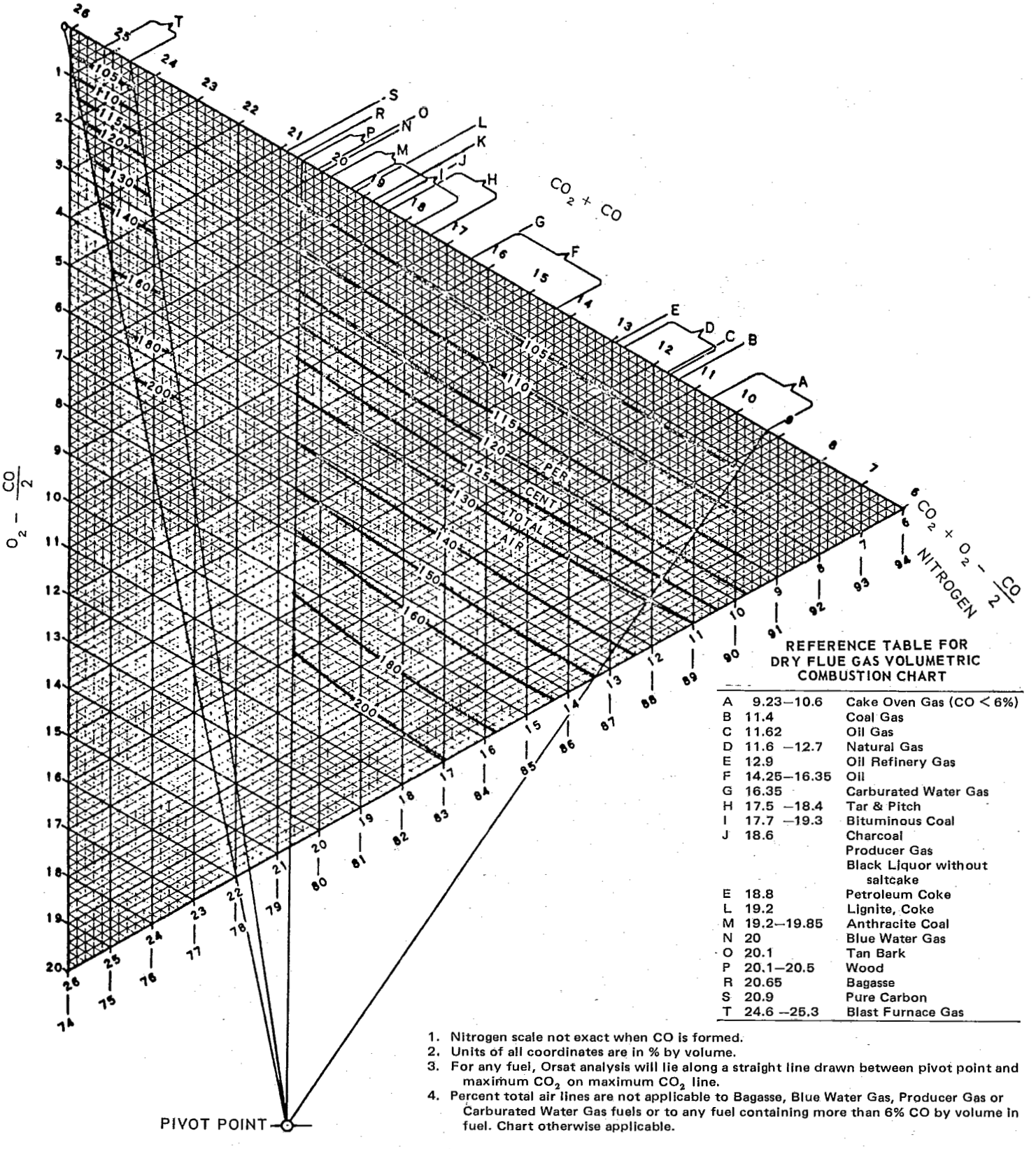

REFERENCE TABLE FOR DRY FLUE GAS VOLUMETRIC COMBUSTION CHART

A	9.23–10.6	Cake Oven Gas (CO < 6%)
B	11.4	Coal Gas
C	11.62	Oil Gas
D	11.6 –12.7	Natural Gas
E	12.9	Oil Refinery Gas
F	14.25–16.35	Oil
G	16.35	Carburated Water Gas
H	17.5 –18.4	Tar & Pitch
I	17.7 –19.3	Bituminous Coal
J	18.6	Charcoal Producer Gas Black Liquor without saltcake
E	18.8	Petroleum Coke
L	19.2	Lignite, Coke
M	19.2–19.85	Anthracite Coal
N	20	Blue Water Gas
O	20.1	Tan Bark
P	20.1–20.5	Wood
R	20.65	Bagasse
S	20.9	Pure Carbon
T	24.6 –25.3	Blast Furnace Gas

1. Nitrogen scale not exact when CO is formed.
2. Units of all coordinates are in % by volume.
3. For any fuel, Orsat analysis will lie along a straight line drawn between pivot point and maximum CO_2 on maximum CO_2 line.
4. Percent total air lines are not applicable to Bagasse, Blue Water Gas, Producer Gas or Carburated Water Gas fuels or to any fuel containing more than 6% CO by volume in fuel. Chart otherwise applicable.

FIG. 15 DRY FLUE GAS VOLUMETRIC COMBUSTION CHART

Copyright ASME International
Provided by IHS under license with ASME
No reproduction or networking permitted without license from IHS
Not for Resale

A_X' = percent = Excess air, the actual quantity of air used minus the theoretical air required divided by the theoretical air and expressed as a percentage.

O_2 = percent = Percent oxygen per volume of dry flue gas as determined by flue gas analysis.

$C_b = \frac{\text{lb}}{\text{lb A.F. fuel}}$ = Pounds of carbon burned per pound of "as fired" fuel. (= C in fuel - unburned C)

$S = \frac{\text{lb}}{\text{lb A.F. fuel}}$ = Pounds of sulfur per pound of "as fired" fuel (laboratory analysis).

$N = \frac{\text{lb}}{\text{lb A.F. fuel}}$ = Pounds of nitrogen per pound of "as fired" fuel (laboratory analysis).

$A_\theta' = \frac{\text{lb}}{\text{lb A.F. fuel}}$ = Theoretical quantity of dry air required for complete combustion of the fuel.

$H = \frac{\text{lb}}{\text{lb A.F. fuel}}$ = Pounds of hydrogen exclusive of that in moisture, per pound of "as fired" fuel (laboratory analysis).

$O = \frac{\text{lb}}{\text{lb A.F. fuel}}$ = Pounds of oxygen per pound of "as fired" fuel (laboratory analysis).

6.03.6.5.2 The preceding equations are based on molecular weights accurate to four significant figures, but it is not implied that the excess air percentage has this degree of accuracy. The four digit molecular weights are used to minimize errors from calculation procedures. The values used are derived from the National Bureau of Standards Circular 564, dated November 1, 1955.

6.03.7 Conversion of ppm *to Different Percent* (O_2) *Basis*

Comparison of emission levels with standard allowable limits or with emission levels from other units requires conversion of ppm to a different (O_2) basis. Measured emissions, in ppm can be converted to any other (O_2) basis by use of the following equation:

$$\text{ppm}_\alpha = \text{ppm}\left[\frac{20.95 - O_{2\alpha}}{20.95 - O_2}\right]$$

Where:

ppm = Concentration of a pollutant as determined by flue gas analysis. Expressed in parts per millions.

ppm_α = Concentartion of a pollutant when converted to a standard oxygen basis. Expressed in ppm.

O_2 = Percent oxygen by volume of dry flue gas as determined by flue gas analysis.

$O_{2\alpha}$ = Standard oxygen basis (by volume of dry flue gas) to which pollutant concentration is being converted.

6.03.8 Conversion of ppm *to lb/10⁶ Btu (μ grams/Joule)*

6.03.8.1 The conversion method of a pollutant concentration from ppm to lb/10^6 Btu fired is described in the following pages.

6.03.8.2 The values which are needed to convert a species from a parts-per-million basis to a weight (mass)-per-fuel-fired basis are:

- ppm of Species Measured in Flue.
- Molecular Weight of Species.
- Percent Oxygen (% O_2) and lb of Moisture per lb Fuel "As Fired" (W_m) in Flue Gas at Analyzer Where Species Measurement Is Made.
- Complete Fuel Analysis "As Fired."
  Carbon, lb/lb "as fired" fuel (*C*)
  Hydrogen, lb/lb "as fired" fuel (*H*)
  Sulfur, lb/lb "as fired" fuel (*S*)
  Oxygen, lb/lb "as fired" fuel (*O*)
  Nitrogen, lb/lb "as fired" fuel (*N*)
  Higher heating value Btu/lb (Joules/gram) (*HHV*)

6.03.8.3 Calculating the Total Mole of Dry Products of Combustion at Stoichiometric Conditions

6.03.8.3.1 The mol of oxygen needed at stoichiometric conditions are calculated from the following equation:

$$M_{O_2} = \left[\frac{C}{12} + \frac{H}{4} + \frac{S}{32} - \frac{O}{32}\right] \quad (1)$$

Where: M_{O_2} = Mol of O_2 needed for stoichiometric conditions per lb A.F. fuel.

6.03.8.3.2 Since all the oxygen reacts with the constituents of the fuel, it is no longer present as free oxygen. Therefore, the mol of oxygen needed at stoichiometric conditions can be used to obtain the mol of nitrogen entered into the products with the oxygen. Since the ratio of nitrogen to oxygen in air by volume is 79.5/20.95, then:

Copyright ASME International
Provided by IHS under license with ASME
No reproduction or networking permitted without license from IHS

Not for Resale

$$M_{N_2} = \left[\frac{79.05}{20.95}\right] M_{O_2} \quad (2)$$

Where: M_{N_2} = Mol of N_2 added to the products of combustion at stoichiometric conditions per lb A.F. fuel.

6.03.8.3.3 The total mol of dry products at stoichiometric conditions can be calculated by adding the mol of CO_2, SO_2 and N_2 released from combustion to the results of Eq. (2):

$$M_{DP} = M_{N_2} + \left[\frac{C}{12} + \frac{S}{32} + \frac{N}{28}\right]$$

Where: M_{DP} = Total mol of dry products at stoichiometric conditions per lb A.F. fuel.

$$M_{DP} = \left[\frac{79.05}{20.95}\right]\left[\frac{C}{12} + \frac{H}{4} + \frac{S}{32} - \frac{O}{32}\right] + \left[\frac{C}{12} + \frac{S}{32} + \frac{N}{28}\right] \quad (3)$$

6.03.8.3.4 If the pollutant in flue gas is determined on a wet basis rather than a dry basis and the flue gas contains W_m percent moisture, then Eq. (3) becomes:

$$M_{WP} = \left[\frac{79.05}{20.95}\right]\left[\frac{C}{12} + \frac{H}{4} + \frac{S}{32} - \frac{O}{32}\right] + \left[\frac{C}{12} + \frac{S}{32} + \frac{N}{28} + \frac{W_m}{18} + \frac{H}{2}\right] \quad (4)$$

6.03.8.3.5 Since combustion always takes place at an excess air above stoichiometric, the total mol of dry products of combustion to supply the required excess air is calculated as follows:

Let M_{DP} = Total mol of dry products of combustion at stoichiometric conditions per lb A.F. fuel.

M_A = Mol of air required to provide % O_2 (excess oxygen) in the flue gas per lb A.F. fuel.

Then % O_2 $(M_{DP} + M_A) = 20.95\, M_A$

$$\text{or } M_A + M_{DP} = \frac{(\%\, O_2)\, M_{DP} + 20.95\, M_{DP} - (\%\, O_2)\, M_{DP}}{20.95 - \%\, O_2}$$

$$= \frac{20.95\, M_{DP}}{20.95 - \%\, O_2}$$

6.03.8.3.6

Total mol of dry products of combustion at a % O_2 (excess oxygen)

$$= M_A + M_{DP} = \frac{20.95\, M_{DP}}{20.95\,(\%\, O_2)} \quad (5)$$

6.03.8.3.7 The weight of a species, W_s, is the product of the number of mol, M_s, times the molecular weight of the species, MW_s, or

$$W_s = M_s \times MW_s \quad (6)$$

6.03.8.3.8 (7) Note that $\frac{M_s}{10^6 M_{DP}} = \frac{\text{parts}}{10^6 \text{ parts}}$

Combining Eqs. 3, 5, 6 and 7:

$$W_s = \left[\frac{20.95\, M_{DP}}{20.95 - \%O_2}\right] \times \left[\frac{M_s}{10^6\, M_{DP}}\right] \times \left[\frac{WM_s}{HHV}\right] \text{ or}$$

$$W_s = \frac{20.95\ (\text{ppm})\ (MW_s)}{(20.95 - \%\, O_2)} \left(\left[\frac{79.05}{20.95}\right]\left[\frac{C}{12} + \frac{H}{4} + \frac{S}{32} - \frac{O}{32}\right] + \left[\frac{C}{12} + \frac{S}{32} + \frac{N}{28}\right]\right) \left(\frac{1}{HHV}\right) \times 10^6$$

6.03.8.3.9 If the flue gas is not dry, then the following equation is used to convert ppm to weight/fuel fired:

$$W_s = \frac{20.95\ (\text{ppm})\ (MW_s)}{(20.95 - \%O_2)\ (HHV)} \left(\left[\frac{79.05}{20.95}\right]\left[\frac{C}{12} + \frac{H}{4} + \frac{S}{32} - \frac{O}{32}\right] + \left[\frac{C}{12} + \frac{S}{32} + \frac{N}{28} + \frac{W_m}{18} + \frac{H}{2}\right]\right) \times 10^6$$

Where: W_{s2} $\frac{\text{Weight (mass) of species}}{\text{Fuel fired}} = \frac{\text{lb}}{10^6\,\text{Btu}} = \frac{(\mu g)}{\text{Joule}}$

6.03.8.4 Nomenclature

ppm = Measured parts-per-million concentration of species $= \frac{M_s}{10^6\, MDP}$

MW_s = Molecular weight of species

HHV = Higher heating value of fuel, Btu/lb (g/Joule)

Copyright ASME International
Provided by IHS under license with ASME
No reproduction or networking permitted without license from IHS
Not for Resale

$\%\ O_2$ = Percent oxygen in flue gas at which species is reported

W_m = Moisture content of flue gas at analyzer where species measurement is taken

C = Carbon in fuel, lb/lb A.F. fuel

H = Hydrogen in flue, lb/lb A.F. fuel

O = Oxygen in fuel, lb/lb A.F. fuel

N = Nitrogen in fuel, lb/lb A.F. fuel

S = Sulfur in fuel, lb/lb A.F. fuel

M_{O_2} = Mol of O_2 needed for stoichiometric condition

M_{N_2} = Mol of N_2 added to the products of combustion at stoichiometric conditions

M_{DP} = Total mol of dry products of combustion at stoichiometric conditions

M_{WP} = Total mol of wet products at stoichiometric conditions

M_A = Mol of air required to provide "$\%\ O_2$" excess oxygen in the flue gas

M_s = Mol of measured species

6.04 Derivation of Various Equations

6.04.1 Derivation of Excess Air Equations

6.04.1.1 The following is the derivation of the equation for computing excess air from O_2 and the fuel analysis. This derivation does not take into account CO because it is usually negligible.

6.04.1.2 Theoretical dry air is calculated from the equation

$$A_\theta' = 11.51C_b + 34.3\left(H - \frac{O}{7.937}\right) + 4.335S$$

Where:

A_θ' = $\frac{\text{lb of dry air}}{\text{lb A.F. fuel}}$ = Theoretical dry air in pounds required to completely burn a pound of "as fired" fuel.

C_b = $\frac{\text{lb carbon}}{\text{lb A.F. fuel}}$ = Pounds of carbon burned per pound of "as fired" fuel.

H = $\frac{\text{lb hydrogen}}{\text{lb A.F. fuel}}$ = Pounds of hydrogen per pound of "as fired" fuel (laboratory analysis).

O = $\frac{\text{lb oxygen}}{\text{lb A.F. fuel}}$ = Pounds of oxygen per pound of "as fired" fuel (laboratory analysis).

S = $\frac{\text{lb sulfur}}{\text{lb A.F. fuel}}$ = Pounds of sulfur per pound of "as fired" fuel (laboratory analysis).

*11.51 = Pounds of air required to burn one pound of carbon lb air/lb carbon.

*34.3 = Pounds of air required to burn one pound of hydrogen, lb air/lb H_2

*7.937 = Pounds of O_2 required to burn one pound of hydrogen, lb O_2/lb H_2

*4.335 = Pounds of air required to burn one pound of sulfur, lb air/lb S

6.04.1.3 The oxygen, carbon dioxide, sulfur dioxide and nitrogen components of the flue gas are calculated from the following equations:

$$O_{2,FG} = 11.819[A_\theta'] \left[\frac{A_X'}{100}\right] .231$$

$$CO_{2,FG} = (8.548)(3.664)C_b$$

$$SO_{2,FG} = (5.77)(1.998)S$$

$$N_{2,FG} = 13.443\left[N + A_\theta'\left(1 + \frac{A_X'}{100}\right) 0.7685\right]$$

Where:

$O_{2,FG}$ = $\frac{\text{ft}^3}{\text{lb A.F. fuel}}$ = Oxygen in products of combustion.

$CO_{2,FG}$ = $\frac{\text{ft}^3}{\text{lb A.F. fuel}}$ = Carbon dioxide in products of combustion.

$SO_{2,FG}$ = $\frac{\text{ft}^3}{\text{lb A.F. fuel}}$ = Sulfur dioxide in products of combustion.

$NO_{2,FG}$ = $\frac{\text{ft}^3}{\text{lb A.F. fuel}}$ = Nitrogen in products of combustion.

**11.819 = Cubic feet per pound of oxygen.

0.231 = Pounds of oxygen/lb of air.

**8.548 = Cubic feet per pound of CO_2.

*From National Bureau of Standards Circular 564, November 1, 1955.

†Assumption is made that O_2 in fuel combines with H in fuel first, with remaining H combining with atmospheric O_2.

**From Gaseous Fuels, 1954.

***From International Critical Tables, Vol. I.

Copyright ASME International
Provided by IHS under license with ASME
No reproduction or networking permitted without license from IHS

Not for Resale

**3.664 = Pounds of CO_2 formed per lb of C.

**5.77 = Cubic feet per lb of SO_2.

**1.998 = Pounds of SO_2 formed per lb of S.

**13.443 = Cubic feet per lb of N_2.

***0.7685 = Pounds of N_2 per lb of air.

6.04.1.4 The oxygen content per volume of dry flue gas determined by flue gas analysis is

$$O_2 = \left[\frac{O_{2,FG}}{O_{2,FG} + CO_{2,FG} + SO_{2,FG} + N_{2,FG}}\right] 100\%$$

Where:

O_2 = Percent = ft^3 oxygen per ft^3 products of combustion.

6.04.1.5 Substituting the values for $O_{2,FG}$, $CO_{2,FG}$, $SO_{2,FG}$ and $N_{2,FG}$:

$$O_2 = \left\{\frac{2.73(A_\theta')\frac{A_X'}{100}}{11.819(.231)\left(\frac{A_X'}{100}\right)A_\theta' + 8.548(3.664)C_b + 5.77(1.998)S + 13.443\left[N + A_\theta'\left[1 + \frac{A_X'}{100}\right]0.7685\right]}\right\} 100\%$$

6.04.1.6 Simplifying the above equation:

$$O_2 = \left\{\frac{2.73(A_\theta')\frac{A_X'}{100}}{2.73(A_\theta')\frac{A_X'}{100} + 31.32C_b + 11.528S + 13.443N + 10.331A_\theta'\left[\frac{A_X'}{100} + 1\right]}\right\} 100$$

6.04.1.7 or

$$O_2 = \left\{\frac{2.73(A_\theta')\frac{A_X'}{100}}{31.32C_b + 11.528S + 13.443N + 10.338A_\theta' + 2.73(A_\theta')\frac{A_X'}{100} + 10.331(A_\theta')\frac{A_X'}{100}}\right\}$$

6.04.1.8 With further simplification,

$$O_2 = \left\{\frac{2.73(A_\theta')\frac{A_X'}{100}}{31.32C_b + 11.528S + 13.443N + A_\theta'\left(10.331 + 13.068\frac{A_X'}{100}\right)}\right\}$$

6.04.1.9 Rearranging this equation so that excess air may be calculated from percent oxygen results in:

$$A_X' \doteq 100\left\{\frac{(O_2/100)(31.32C_b + 11.528S + 13.443N + 10.331A_\theta')}{A_\theta'\left(2.73 - 13.068\frac{O_2}{100}\right)}\right\}$$

**From Gaseous Fuels, 1954.

***From International Critical Tables, Vol. I.

Copyright ASME International
Provided by IHS under license with ASME
No reproduction or networking permitted without license from IHS
Not for Resale

6.04.1.10 Similarly, CO_2 may be calculated as follows:

$$CO_2 = \frac{CO_{2,FG}}{O_{2,FG} + CO_{2,FG} + SO_{2,FG} + N_{2,FG}}$$

6.04.1.11 or

$$CO_2 = \frac{31.32C_b}{31.32C_b + 11.528S + 13.443N + A_\theta'\left(10.331 + 13.068\frac{A'_X}{100}\right)}$$

It should be noted that the computation of excess air by the ASME PTC 4.1–1964 assumes that SO_2 in the flue gas is absorbed by the disorbent of the Orsat and therefore shows up as CO_2. If for any reason the above value of CO_2 was to be used in the ASME equation, it would have to be adjusted for SO_2 production as follows:

$$CO_2'' = \frac{31.32C_b + 11.528S}{31.32C_b + 11.528S + 13.443N + A_\theta'\left(10.331 + 13.068\frac{A'_X}{100}\right)}$$

Where:

CO_2'' = The "apparent" CO_2 by Orsat, i.e., $CO_2 + SO_2$.

6.04.2 Derivation of the Weight of Dry Air. The following is the derivation of the equation for computing the weight of dry air per pound of "as fired" fuel. In this derivation the assumption is made that whatever sulfur present in the fuel is burned to sulfur dioxide. This is not entirely true, a fraction may be burned to sulfur trioxide and another fraction could form oxides with the ash. In addition some of the sulfur may be in the form of sulfides or sulfates and unavailable for combustion. However, the treatment presented here appears to be the best for general usage. An additional minor assumption made is that all the sulfur dioxide sampled is removed in the Orsat by the carbon dioxide reagent.

Pounds of dry gas per mole of dry gas =

$$44.01\frac{(CO_2)}{100} + 28.01\frac{(CO)}{100} + 32.00\frac{(O_2)}{100} + 28.02\frac{(N_2)}{100}$$

Pounds of equivalent carbon burned per mole of dry gas

$$= 12.01\frac{(CO_2 + CO)}{100}$$

In order to use this equation the pounds of carbon burned per pound of "as fired" fuel must be adjusted for the sulfur dioxide absorbed in the Orsat as carbon dioxide.

To reduce the sulfur in the fuel to its carbon equivalent, multiply the sulfur in the fuel by $\left[\frac{12.01}{32.07}\right]$

Molecular weight: C = 12.01
S = 32.07

Then the equivalent carbon burned is $C_b + \frac{12.01}{32.07}S$

The pounds of dry gas per pound of "as fired" fuel is obtained as follows:

$$W_{G'} = \frac{\text{lb dry gas}}{\text{mole dry gas}} \times \frac{1}{\frac{\text{lb carbon}}{\text{mole dry gas}}} \times \frac{\text{lb carbon}}{\text{lb A.F. fuel}}$$

$$= \frac{\text{lb dry gas}}{\text{lb A.F. fuel}}$$

$$W_{G'} = \frac{44.01\,(CO_2) + 28.01\,(CO) + 32.00\,(O_2) + 28.02(N_2)}{12.01(CO_2 + CO)}$$

$$\left(C_b + \frac{12.01}{32.07}S\right)$$

Copyright ASME International
Provided by IHS under license with ASME
No reproduction or networking permitted without license from IHS
Not for Resale

Pounds of nitrogen per mole of dry gas = $28.02\,\frac{(N_2)}{100}$

$$W_{NG'} = \frac{1}{\frac{\text{lb dry gas}}{\text{mole dry gas}}} \times \frac{\text{lb nitrogen}}{\text{mole dry gas}}$$

= pounds of nitrogen in the dry gas per pound of dry gas

$$W_{NG'} = \frac{28.02\,(N_2)}{44.01\,(CO_2) + 28.01\,(CO) + 32.00\,(O_2) + 28.02\,(N_2)}$$

Pounds of nitrogen in the dry gas per pound of dry gas multiplied by pounds of dry gas per pound of "as fired" fuel = $W_{NG'} \times W_{G'}$ = Pounds of nitrogen in the dry gas per pound of "as fired" fuel = $W_{G'N_2}$.

Therefore:

$$W_{G'N_2} = \frac{28.02\,(N_2)}{44.01\,(CO_2) + 28.01\,(CO) + 32.00\,(O_2) + 28.02\,(N_2)} \times \frac{44.01\,(CO_2) + 28.01\,(CO) + 32.00\,(O_2) + 28.02\,(N_2)}{12.01\,(CO_2 + CO)}$$

$$\left(C_{b_r} + \frac{12.01}{32.07}\,S\right)$$

$$W_{G'N_2} = \frac{28.02\,(N_2)}{12.01\,(CO_2 + CO)} \left(C_b + \frac{12.01}{32.07}\,S\right)$$

6.05 Statistical Interpretation of Data-Sampling Requirements

6.05.1 It is impossible to make exhaust gas analyses without data scatter. While detailed statistical studies for individual applications are rarely justified, it is almost always worthwhile to do some statistical calculations. Otherwise, measurement systems may be needlessly overdesigned or results may be given more credibility than warranted. This section gives guidance for determining the number of sampling probes and the number of repetitions required.

6.05.2 Measurement accuracy is usually limited by sampling system accuracy, instrument (or technique) precision, and calibration accuracy. For many exhaust streams, the sampling system accuracy is the most significant limitation. Those extractive systems with the sampling interface designed to minimize reactions between the probe and the analyses are limited in accuracy by sampling from a non-mixed exhaust. A satisfactory method for reducing this type of sample error is to take data from several locations which leads to a more representative sample and better precision. This is illustrated by Fig. 16, which shows the effect of taking measurements at more than one spatial location. It is seen that an average of ten (10) readings taken from ten (10) probe tips in a cross-section for an extractive system has about one-third the uncertainty of any individual reading. An equivalent method for reducing error due to concentration profiles in the exhaust is to know the real specie profiles prior to testing.

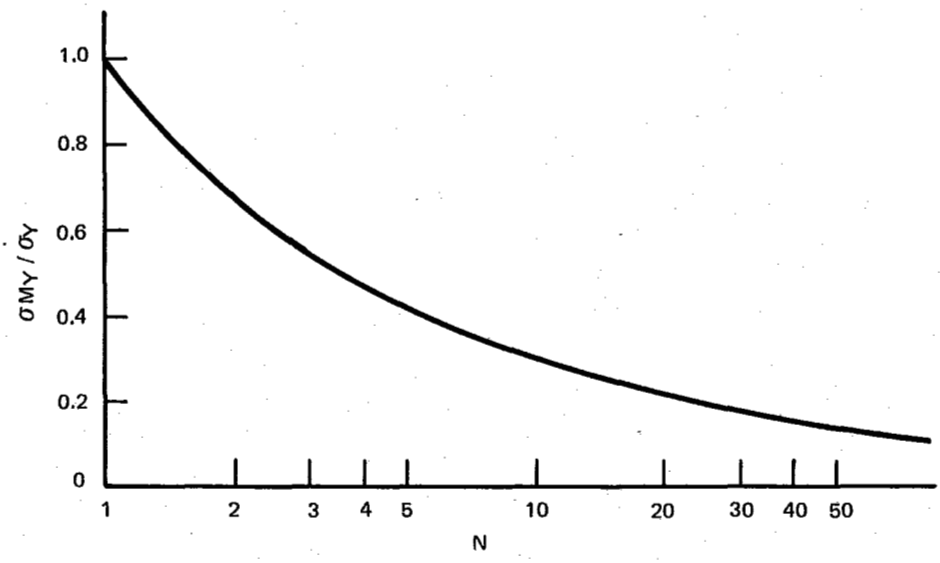

FIG. 16 SPACIAL AVERAGE AT MULTIPLE POINTS

Copyright ASME International
Provided by IHS under license with ASME
No reproduction or networking permitted without license from IHS
Not for Resale

6.05.3 The extractive sampling system can cause additional error at the sample line or sample conditioning apparatus whenever there is a possibility for alteration of the exhaust constituents. For example, sulfur dioxide present in the exhaust stream will be oxidized partially to sulfur trioxide before it is analyzed. This will always cause a bias error because residence time cannot be eliminated and will normally cause precision error because factors influencing the oxidation, such as particulate in sample lines or wall temperatures, are variable. Another source of error is the unstable temperature of the sample line which causes fluctuating amounts of water vapor or hydrocarbons to condense. Sources of error cause data scatter and inaccuracy. The effect of interference (see Section 3, Extractive System) on the particular measurement must be understood to minimize these errors.

6.05.4 The instrument error may be expressed as a percent of full scale. Thus, it will be more significant in the lower range of the scale. Many manual techniques will have error expressed similarly, depending on the detailed procedure of the technique. A general rule in selecting instruments for application is the equation:

$$\sigma_{M_{y,i}} \leq 0.1\,\sigma_{Y,S} \qquad (1)$$

Where:

σ = Standard deviation of the population.

M_Y = Actual measurement of the parameter y. This includes all vagaries of the sampling system and analysis procedure.

S = Spatial variation (actual) of the parameter, y.

That is, the instrument is overspecified for the exhaust stream if its precision is less than 10 percent of the spacial variation.

6.05.5 The last source of error is the calibrative error. All standards used for calibration had to be calibrated themselves. With each hierarchy of calibration, uncertainty was passed on from the ultimate standard (often a National Bureau of Standards determination) down to the instrument making a reading. Calibration error will act as a percent of reading error, so it will be most significant in the upper range of the instrument scale.

6.05.6 Transient operation of the combustor and instrument uncertainty must be considered in order to determine how many repetitive readings should be made at each point for a measurement. Assuming that time variation effects are the same order of magnitude as the instrument uncertainty,

$$\text{Let } \tau = \sigma_{y,t}/\sigma_{M_{y,i}} \qquad (2)$$

Where: $\sigma_{y,t}$ = the standard deviation of time fluctuations, which can be assumed equal to the spatial variation for purpose of estimations.

$\sigma_{M_{y,i}}$ = is instrument standard deviation.

Then the number of readings should be:

$$N_t \geq \frac{1}{3}\tau^2$$

The standard deviation can be estimated from Fig. 17.

6.05.7 Example

6.05.7.1 This example describes the logic followed in designing a system and test procedure.

6.05.7.2 An exhaust stream has a variation of NO concentration in the cross section with a standard deviation of 10 ppm (known from prior tests on this or similar exhausts). Therefore, an instrument was chosen with a standard deviation of 1 ppm (equal to 10 ppm/10) based on Eq. (1). "Instrument" here refers to the entire extractive system from the probe to the instrument. For example if the measurements are to have a standard deviation of 4 ppm, Fig. 16 is entered with (σ_{M_y}/σ_y) = 4 ppm/10 ppm which gives a requirement that a spatial average of six (6) points be taken across the cross section. The number of time measurements can also be estimated from Eq. (2) τ = (4/1), and $N_t \geq \frac{1}{3}(4)^2$ = 5.3, or six measurements are required. In summary six repeat measurements from all six probes are required. The standard deviation of ten (10) can be checked by the range found when the measurements are made using Fig. 17.

6.05.7.3 This design assumed several things. Probably the most important was that the interface system would handle the extracted sample without altering it. Conditions (such as water traps) which will contribute to the inaccuracy of the readings should be eliminated. It is important that the measurement systems were accurately calibrated.

6.06 Design of Multi-Holed Sample Probe

6.06.1 There are occasions, such as those described in Section 3.02.5, when use of a multi-holed sample probe is acceptable or even preferable. This appendix covers the procedure for designing a proper probe. The basic principle of the probe is to draw a sample of the exhaust flow having a sample concentration equal the average concentrations of the exhaust. This can be done by the proper placement of equally sized holes in the sample probe.

Copyright ASME International
Provided by IHS under license with ASME
No reproduction or networking permitted without license from IHS

Not for Resale

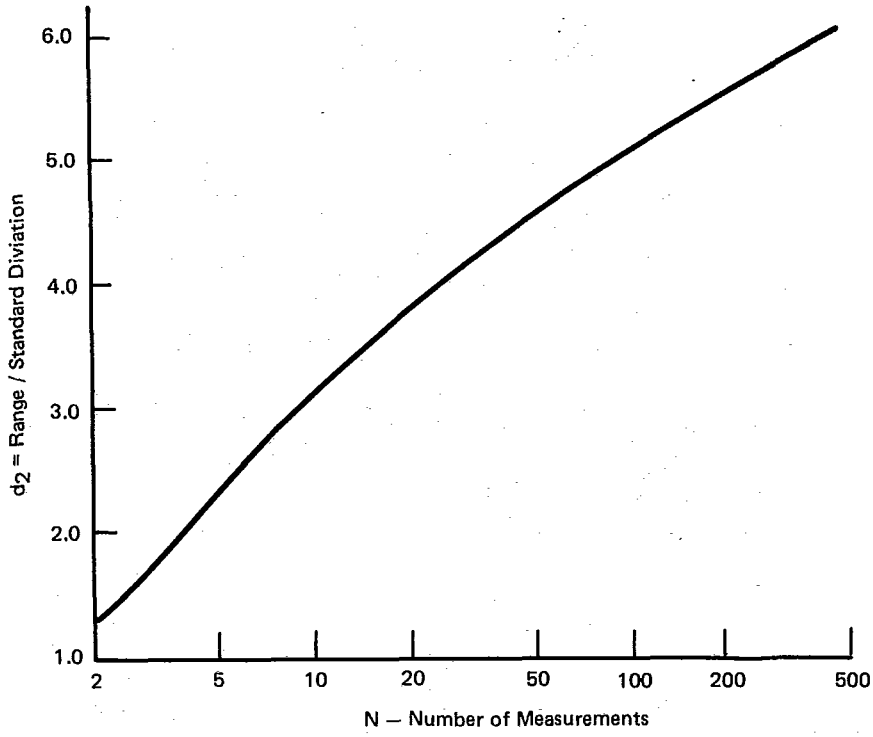

FIG. 17 EXPECTED RANGE FOR A NORMAL DISTRIBUTION

6.06.2 The hole size that should be used is given by the following equations:

(1) $A_H = A_p/(0.6N)$

Where:

A_H = Area of the probe holes.

A_p = Internal cross-sectional area of the probe.

N = Number of holes in the probe.

The design requires that one end of the probe be sealed while the other end is connected to the sampling line.

6.06.3 When the sample probe pressure is set equal to the static (i.e., "wall tap") pressure of the exhaust flow, the sample flow drawn into each hole will be proportional to the mass flux of the exhaust flow near the hole. This means the total sample will have a concentration equal to average concentration of the exhaust near all of the sample holes. This is true regardless of what gradients (e.g., temperature, or velocity) are causing variation in mass flux across the exhaust flow. The only requirement is that the exhaust flow direction be approximately normal to the holes. This means that multi-holed probes may not be suitable for exhaust flows having significant back flow.

6.06.4 Three factors can reduce the accuracy of the probe. One is that sample velocity inside the probe itself will cause different static probe pressures at the different holes. This is due to different mass flow in the probe at different holes. Unless a very large sample is being drawn, this will not be a measurable effect. Keeping the Mach number inside the probe less than 0.1 will usually eliminate any possibility of this effect.

6.06.5 Another is the effect of temperature gradients along the probe causing heating or cooling of the sample inside and commensurate changes in the static pressure. This effect can be estimated by estimating the Nusselt number of the flow between holes and using standard heat transfer theory. But this effect again will be negligible for most applications.

6.06.6 The one factor with potential importance occurs when it is desirable to set the probe pressure at a different pressure than the exhaust static pressure. This would be conceivable for example when the constraints of probe dimensions and the exhaust static pressure would cause a sample flow too low to keep a reasonably short residence time in the external sampling line. In this case, the size of each hole can be varied according to:

$$A_H, i = A_H \left[(P_{t,i} - P_s)/(P_{t,i} - P_H) \right]^{1/2} \qquad (2)$$

Copyright ASME International
Provided by IHS under license with ASME
No reproduction or networking permitted without license from IHS
Not for Resale

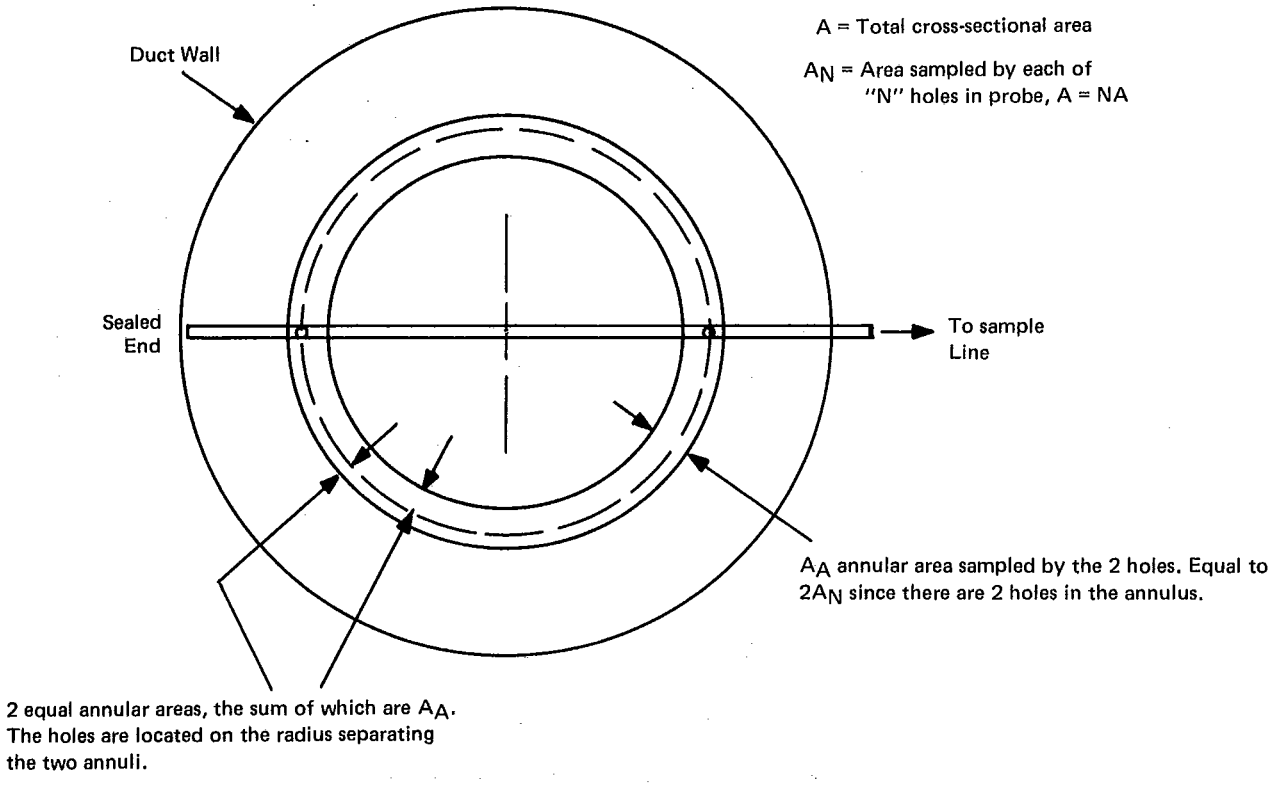

FIG. 18 HOLE POSITION FOR CIRCULAR DUCT ("N" EQUAL-SIZED HOLES)

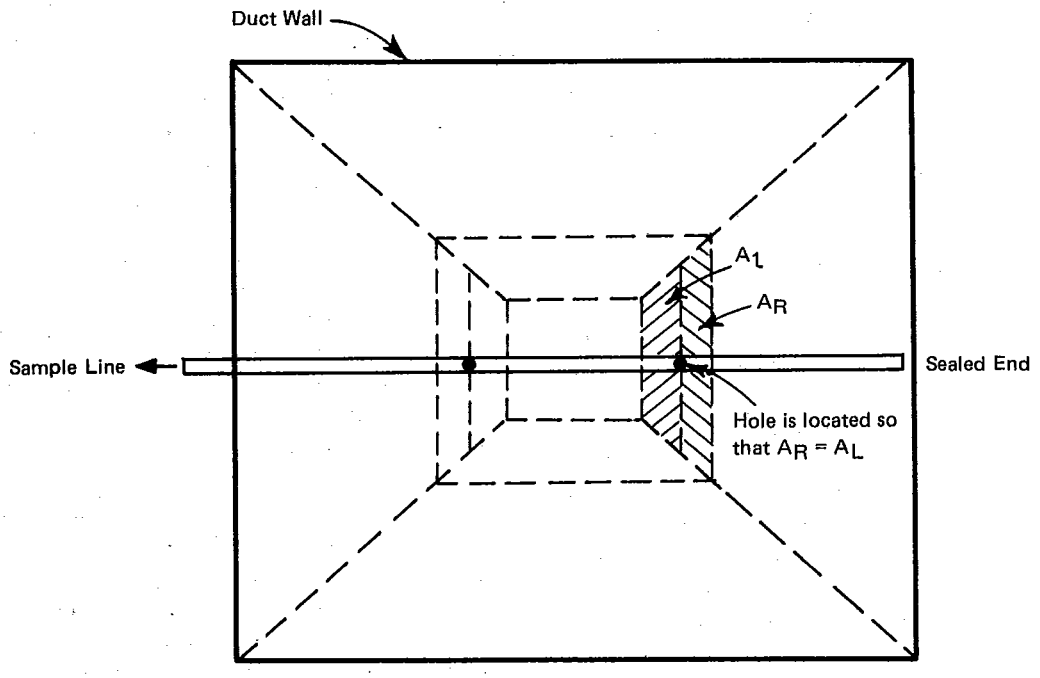

FIG. 19 HOLE POSITIONS FOR RECTANGULAR DUCTS (EQUAL-SIZED HOLES)

Copyright ASME International
Provided by IHS under license with ASME
No reproduction or networking permitted without license from IHS
Not for Resale

A_H, i = Area of the "ith" hole in the probe.

P_t, i = Total (stagnation) pressure of exhaust flow.

P_s = Static pressure of exhaust flow.

P_H = Probe pressure.

Field experience has been that this, likewise, is usually not a significant factor.

6.06.7 The problem is to insure that the limited number of holes will be drawing a representative sample of the whole exhaust. This involves the spacing of the holes. It also requires some knowledge of the exhaust being sampled. For example, consider a circular duct and the design for a probe of N equal-sized holes. If there are harmonic variations in the circumferential direction, this must be recognized and the probes positioned to account for it. Most stacks have random variations circumferentially. With random variations, the probe or probes would be preferably placed along a diameter, with the holes positioned at the radius which divides the annulus the hole is drawing from into two equal sub-annuli (see Fig. 18). Note that if an odd number of holes are used, the central hole, which samples from a circle, will sample from an area which is one-half of any of the annular areas. This is because there are two holes from each annulus, but only one for the center. The number of holes chosen is dictated by the severity of gradients in the duct. For severe gradients, many small holes would be required, while for completely homogeneous ducts, only one hole is required. Of course, the size of holes is determined by the desired sample flow and the number of holes (see Eq. (1)). The positioning of the holes is also given by the equation displayed in Fig. 2 of Section 3.

6.06.8 The procedure for hole spacing is similar in rectangular ducts, and is graphically displayed in Fig. 19. Unless a good understanding is had regarding the duct, it is recommended that two, mutually perpendicular, multi-holed probes be used in any duct.

Copyright ASME International
Provided by IHS under license with ASME
No reproduction or networking permitted without license from IHS
Not for Resale

INSTRUMENTS AND APPARATUS

These supplementary documents give descriptions of, and directions for, the use and calibration of measuring devices likely to be required.

A complete list of ASME publications will be furnished upon request.

SUPPLEMENTS ON INSTRUMENTS AND APPARATUS NOW AVAILABLE

PTC 19.2	Pressure Measurement	(1964)
PTC 19.3	Temperature Measurement	(1974)
PTC 19.5	Measurement of Quantity of Materials: 19.5.1, Weighing Scales	(1964)
PTC 19.6	Electrical Measurements in Power Circuits	(1955)
PTC 19.7	Measurement of Shaft Power	(1980)
PTC 19.8	Measurement of Indicated Power	(1970)
PTC 19.10	Flue and Exhaust Gas Analyses	(1981)
PTC 19.11	Water and Steam in the Power Cycle (Purity and Quality, Leak Detection and Measurement)	(1970)
PTC 19.12	Measurement of Time	(1958)
PTC 19.13	Measurement of Rotary Speed	(1961)
PTC 19.14	Linear Measurements	(1958)
PTC 19.16	Density Determinations of Solids and Liquids	(1965)
PTC 19.17	Determination of Viscosity of Liquids	(1965)
PTC 19.20	Smoke-Density Determinations	(1971)
PTC 19.23	Guidance Manual for Model Testing	(1980)

Copyright ASME International
Provided by IHS under license with ASME
No reproduction or networking permitted without license from IHS

Not for Resale