ASME PTC 18-2002

HYDRAULIC TURBINES AND PUMP-TURBINES

PERFORMANCE TEST CODES

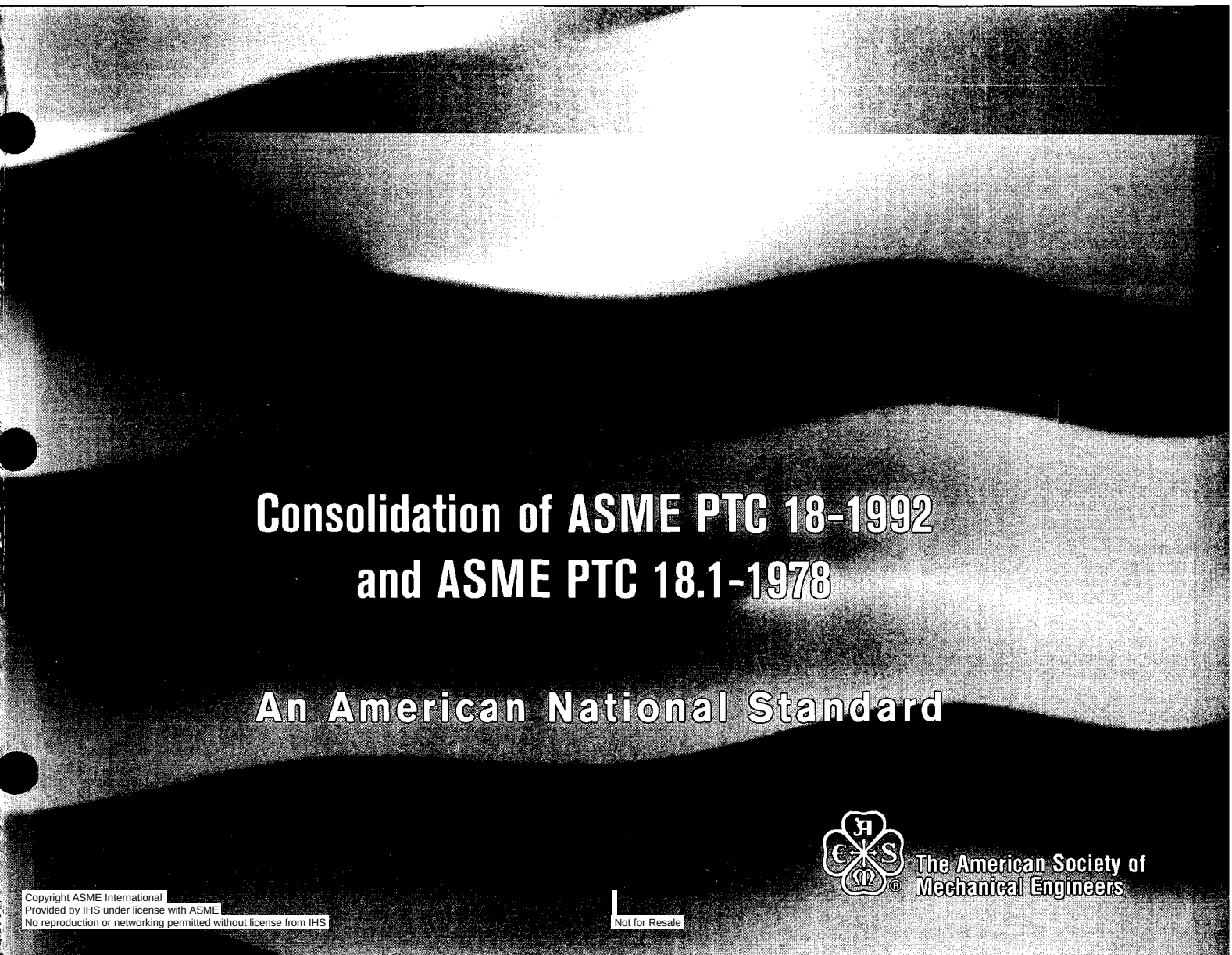

Consolidation of ASME PTC 18-1992
and ASME PTC 18.1-1978

An American National Standard

The American Society of Mechanical Engineers

Copyright ASME International
Provided by IHS under license with ASME
No reproduction or networking permitted without license from IHS

Not for Resale

The American Society of Mechanical Engineers

AN AMERICAN NATIONAL STANDARD

HYDRAULIC TURBINES AND PUMP-TURBINES

PERFORMANCE TEST CODES

ASME PTC 18-2002

(CONSOLIDATION of ASME PTC 18-1992 and ASME PTC 18.1-1978)

Copyright ASME International
Provided by IHS under license with ASME
No reproduction or networking permitted without license from IHS
Not for Resale

Date of Issuance: April 11, 2003

This Code will be revised when the Society approves the issuance of a new edition. There will be no addenda issued to this edition.

ASME will issue written replies to inquiries concerning interpretations of technical aspects of this Code. Interpretations are published on the ASME Web site under the Committee Pages at http://www.asme.org/codes as they are issued.

ASME is the registered trademark of The American Society of Mechanical Engineers.

This code or standard was developed under procedures accredited as meeting the criteria for American National Standards. The Standards Committee that approved the code or standard was balanced to assure that individuals from competent and concerned interests have had an opportunity to participate. The proposed code or standard was made available for public review and comment that provides an opportunity for additional public input from industry, academia, regulatory agencies, and the public-at-large.

ASME does not "approve," "rate," or "endorse" any item, construction, proprietary device, or activity.

ASME does not take any position with respect to the validity of any patent rights asserted in connection with any items mentioned in this document, and does not undertake to insure anyone utilizing a standard against liability for infringement of any applicable letters patent, nor assume any such liability. Users of a code or standard are expressly advised that determination of the validity of any such patent rights, and the risk of infringement of such rights, is entirely their own responsibility.

Participation by federal agency representative(s) or person(s) affiliated with industry is not to be interpreted as *government or industry endorsement of this code or standard.*

ASME accepts responsibility for only those interpretations of this document issued in accordance with the established ASME procedures and policies, which precludes the issuance of interpretations by individuals.

No part of this document may be reproduced in any form,
in an electronic retrieval system or otherwise,
without the prior written permission of the publisher.

The American Society of Mechanical Engineers
Three Park Avenue, New York, NY 10016-5990

Copyright © 2003 by
THE AMERICAN SOCIETY OF MECHANICAL ENGINEERS
All Rights Reserved
Printed in U.S.A.

Copyright ASME International
Provided by IHS under license with ASME
No reproduction or networking permitted without license from IHS

Not for Resale

CONTENTS

Foreword v
Committee Roster vii

1 Object and Scope 1
1.1 Object 1
1.2 Scope 1

2 Definitions and Description of Terms 2

3 Guiding Principles 19

4 Instruments and Methods of Measurements 25
4A General 25
4B Head and Pressure Measurement 25
4C Flow Measurement 29
4D Power Measurement 59
4E Speed Measurement 63
4F Time Measurement 63
4G Relative Flow Measurement — Index Test 64

5 Computation of Results 70
5.1 Measured Values 70
5.2 Conversion of Test Results to Specified Conditions 70
5.3 Computation of Turbine Index Test Results 71
5.4 Evaluation of Errors 72
5.5 Assessment of Turbine Index Test Errors 72
5.6 Comparison with Guarantees 72

6 Report of Results 73

Figures
2.4A Head Definition, Measurement and Calibration, Vertical Shaft Machine With Spiral Case and Pressure Conduit 13
2.4B Head Definition, Vertical Shaft Kaplan or Propeller Machine with Semi-Spiral Case 14
2.4C Head Definition, Bulb Machine 15
2.4D Head Definition, Horizontal Shaft Impulse Turbine (One or Two Jets) 16
2.4E Head Definition, Vertical Shaft Impulse Turbine 17
2.5 Reference Elevation of Z_c of Turbines and Pump-Turbines 18
3.23A Limits of Permissible Deviation from Specified Conditions Operating in Turbine Mode 23
3.23B Limits of Permissible Deviations from Specified Conditions Operating in Pump Mode 24
4B.11 Pressure Tap 27
4B.12 Calibration Connections for Pressure Gages or Pressure Transducers 28
4C.17 Location of Point Velocity Measurements with Weighting Factors K_i for the Log-Linear Method in a Rectangular Measurement Section 31
4C.35 Typical Pressure-Time Diagram 35
4C.37 Arrangement of Pressure-Time Apparatus 36
4C.40 Damped Harmonic Waves 37
4C.42 Sample of Data and Computation Sheet of a Flow Rate Measurement by the Pressure-Time Method 38
4C.53 Example of Digital Pressure-Time Signal 41
4C.61 Ultrasonic Method – Diagram to Illustrate Principle 43

Copyright ASME International
Provided by IHS under license with ASME
No reproduction or networking permitted without license from IHS
Not for Resale

4C.63 Ultrasonic Method – Typical Arrangment of Transducers in a Circular Conduit 44
4C.67 Ultrasonic Method – Typical Arrangment of Transducers in a Rectangular Conduit 45
4C.68 Distortion of the Velocity Profile Caused by Protruding Transducers 47
4C.75 Locations for Measurements of D 49
4C.82 Profile of the Classical Venturi Meter 51
4C.89 Schematic Representation of Dye Dilution Technique 53
4C.91 Experimental Results: Allowable Variation in Tracer Concentration 54
4C.94 Typical Chart Recording During Sampling 57
4D.7.1 Three-Wattmeter Connection Diagram 60
4D.7.2 Two-Wattmeter Connection Diagram 61
4G.4 Effect of Variations in Exponent on Relative Flow Rate 65
4G.8.1 Location of Winter-Kennedy Pressure Taps in Spiral Case 66
4G.8.2 Location of Winter-Kennedy Pressure Taps in Semi-Spiral Case 67
4G.9 Location of Differential Pressure Taps in Bulb Turbine or Converging Taper Penstock 68

Tables

2.3 Conversion Factors Between SI and U.S. Customary Units of Measure 2
2.4A Letter Symbols and Definitions 4
2.4B Acceleration of Gravity as a Function of Latitude and Altitude 7
2.4C Vapor Pressure of Distilled Water p_{vp} (Pa) as a Function of Temperature 8
2.4D Density of Water at a Given Temperature and Pressure 9
2.4E Density of Dry Air 11
2.4F Density of Mercury 12
4C.16 Locations of Measurement Points Using Log-Linear Method 31
4C.66 Integration Parameters for Ultrasonic Method 46
4C.82 Minimum Diameters of Straight Pipe Between Venturi Meter Inlet and Nearest Upstream Fitting 52

Mandatory Appendices

I Uncertainty Analysis 75
II Outliers 78

Nonmandatory Appendix

A Typical Values of Overall Uncertainty 79

Tables

I-1 Two-Tailed Student t Table for the 95% Confidence Level 76
II-1 Modified Thompson τ (At the 5% Significance Level) 78

Copyright ASME International
Provided by IHS under license with ASME
No reproduction or networking permitted without license from IHS
Not for Resale

FOREWORD

The "Rules for Conducting Tests of Waterwheels" was one of a group of ten test codes published by the ASME in 1915. The Pelton Water Wheel Company published a testing code for hydraulic turbines, which was approved by the Machinery Builders' Society on October 11, 1917. This code included the brine velocity method of measuring flow wherein the time of passage of an injection of brine was detected by electrical resistance. Also in October 1917, the Council of the ASME authorized the appointment of a joint committee to undertake the task of revising the "Rules for Conducting Tests of Waterwheels." The joint committee consisted of thriteen members, four from the ASME and three each from ASCE, AIEE, and NELA (National Electric Light Association). The code was printed in the April 1922 issue of *Mechanical Engineering* in preliminary form. It was approved in the final revised form at the June 1923 meeting of the Main Committee and was later approved and adopted by the ASME Council as a standard practice of the Society.

Within three years the 1923 revised edition was out of print and a second revision was ordered by the Main Committee. In November 1925, the ASME Council appointed a new committee, the Power Test Codes Individual Committee No. 18 on Hydraulic Power Plants. This committee organized itself quickly and completed a redraft of the code in time for a discussion with the advisory on Prime Movers of the IEC at the New York meeting later in April 1926. The code was redrafted in line with this discussion and was approved by the Main Committee in March 1927. It was approved and adopted by the ASME Council as the standard practice of the Society on April 14, 1927.

In October 1931 the ASME Council approved personnel for a newly organized committee, Power Test Codes Individual Committee No. 18 on Hydraulic Prime Movers, to undertake revision of the 1927 test code. The committee completed the drafting of the revised code in 1937. The Main Committee approved the revised code April 4, 1938. The code was then approved and adopted by the Council as standard practice of the Society on June 6, 1938. The term "Hydraulic Prime Movers" is defined as reaction and impulse turbines, both of which are included in the term "hydraulic turbines." A revision of this Code was approved by the Power Test Codes Committee and by the Council of ASME in August 1942. Additional revisions were authorized by Performance Test Code Committee No. 18 (PTC 18) in December 1947. Another revision was adopted in December 1948. It was also voted to recommend the reissue of the 1938 Code to incorporate all of the approved revisions as a 1949 edition. A complete rewriting of the Code was not considered necessary, because the 1938 edition had been successful and was in general use. A supplement was prepared to cover index testing. The revised Code including index testing was approved April 8, 1949, by the Power Test Codes Committee and was approved and adopted by the Council of ASME by action of the Board on Codes and Standards on May 6, 1949.

The members of the 1938 to 1949 committees included C. M. Allen, who further developed the Salt Velocity Method of flow rate measurement; N. R. Gibson, who devised the Pressure-Time Method of flow rate measurement; L. F. Moody, who developed a method for estimating prototype efficiency from model tests; S. Logan Kerr, a successful consultant on pressure rise and surge; T. H. Hogg, who developed a grapical solution for pressure rise; G. R. Rich, who wrote a book on pressure rise; as well as other well known hydro engineers.

In 1963, the Hydraulic Prime Movers Test Code Committee, PTC 18, was charged with the preparation of a Test Code for the Pumping Mode/Pump Turbines. The Code for the pumping mode was approved by the Performance Test Codes Supervisory Committee on January 23, 1978, and was then approved as an American National Standard by the ANSI Board of Standards Review on July 17, 1978.

The PTC 18 Committee then proceeded to review and revise the 1949 Hydraulic Prime Movers Code as a Test Code for Hydraulic Turbines. The result of this effort was the publication of PTC 18-1992 Hydraulic Turbines.

Since two separate but similar Codes now existed, the PTC 18 Committee proceeded to consolidate them into a single Code encompassing both the turbine and pump modes of Pump/Turbines.

Copyright ASME International
Provided by IHS under license with ASME
No reproduction or networking permitted without license from IHS
Not for Resale

The consolidation also provided the opportunity to improve upon the clarity of the preceeding Codes, as well as to introduce newer technologies such as automated data-acquisition and computation techniques, and the dye-dilution method. Concurrently, the flow methods of salt velocity, pitot tubes and weirs, which had become rarely used, were removed from this Edition. However, detailed descriptions of these methods remain in previous versions of PTC 18 and PTC 18.1

The methods of measuring flow rate included in this Code meet the criteria of the PTC 18 Committee for soundness of principle, have acceptable limits of accuracy, and have demonstrated application under laboratory and field conditions. There are other methods of measuring flow rate under consideration for inclusion in the Code at a later date.

This Code was approved by the Board on Performance Test Codes on July 7, 2002, and approved as an American National Standard by the ANSI Board of Standards Review on October 7, 2002.

NOTICE

All Performance Test Codes **MUST** adhere to the requirements of **PTC 1, GENERAL INSTRUCTIONS**. The following information is based on that document and is included here for emphasis and for the convenience of the user of this Code. It is expected that the Code user is fully cognizant of Parts I and III of PTC 1 and has read them prior to applying this Supplement.

ASME Performance Test Codes provide test procedures which yield results of the highest level of accuracy consistent with the best engineering knowledge and practice currently available. They were developed by balanced committees representing all concerned interests. They specify procedures, instrumentation, equipment operating requirements, calculation methods, and uncertainty analysis.

When tests are run in accordance with a Code, the test results themselves, without adjustment for uncertainty, yield the best available indication of the actual performance of the tested equipment. ASME Performance Test Codes do not specify means to compare those results to contractual guarantees. Therefore, it is recommended that the parties to a commercial test agree **before starting the test and preferably before signing the contract** on the method to be used for comparing the test results to the contractual guarantees. It is beyond the scope of any Code to determine or interpret how such comparisons shall be made.

Copyright ASME International
Provided by IHS under license with ASME
No reproduction or networking permitted without license from IHS
Not for Resale

PERSONNEL OF PERFORMANCE TEST CODE COMMITTEE NO. 18 ON HYDRAULIC PRIME MOVERS

(The following is the roster of the Committee at the time of approval of this Code.)

OFFICERS

W. W. Watson, *Chairman*
R. I. Munro, *Vice Chairman*
G. Osolsobe, *Secretary*

COMMITTEE PERSONNEL

C. W. Almquist, Principia Research Corp.
R. E. Deitz, Safe Harbor Water Power Corp.
L. F. Henry, Consultant
J. J. Hron, MWH, Inc.
D. O. Hulse, US Bureau of Reclamation
P. Lamy, Hydro-Quebec
N. H. Latimer, Consultant
A. B. Lewey, US Army Corps of Engineers
P. Ludewig, New York Power Authority
P. A. March, Tennessee Valley Authority
C. Marchand, GE Hydro
G. H. Mittendorf, Consultant
R. I. Munro, Ontario Power Generation, Inc.
L. L. Pruitt, Stanley Consultants, Inc.
A. E. Rickett, Consultant
P. R. Rodrigue, Acres International Corp.
J. T. Walsh, Accusonic Technologies
W. W. Watson, Metropolitan Water District of Southern California

BOARD ON PERFORMANCE TEST CODES

OFFICERS

S. J. Korellis, *Chairman*
J. R. Friedman, *Vice Chairman*
W. O. Hays, *Secretary*

COMMITTEE PERSONNEL

P. G. Albert
R. P. Allen
R. L. Bannister
J. M. Burns
C. Campbell
M. J. Dooley
A. J. Egli
G. J. Gerber
P. M. Gerhart
Y. Goland
T. C. Heil
T. S. Jonas
D. R. Keyser
P. M. McHale
J. W. Milton
G. H. Mittendorf
S. P. Nuspl
A. L. Plumley
R. R. Priestley
J. W. Siegmund
J. A. Silvaggio
W. G. Steele
J. C. Westcott
J. G. Yost

Copyright ASME International
Provided by IHS under license with ASME
No reproduction or networking permitted without license from IHS
Not for Resale

Copyright ASME International
Provided by IHS under license with ASME
No reproduction or networking permitted without license from IHS
Not for Resale

HYDRAULIC TURBINES AND PUMP-TURBINES

SECTION 1
OBJECT AND SCOPE

1.1 Object

This Code defines procedures for field performance and acceptance testing of hydraulic turbines and pump-turbines operating with water in either the turbine or pump mode.

1.2 Scope

This Code applies to all sizes and types of hydraulic turbines or pump-turbines. It defines methods for ascertaining performance by measuring flow rate (discharge), head, and power, from which efficiency may be determined. Requirements are included for pretest arrangements, types of instrumentation, methods of measurement, testing procedures, methods of calculation, and contents of test reports.

This Code contains mandatory test requirements and various methods of measurement. Where multiple methods of measurement and procedures are permitted by the Code, prior written agreement as to the selected methods and procedures is required.

The code on General Instructions, ASME PTC 1, governs the philosophy and general approach of ASME performance test codes.

The test procedures specified herein and the limitations placed on measurement methods and instrumentation are capable of providing a total uncertainty, calculated in accordance with the procedures of PTC 19.1 and of this Code, of not more than:

(a) Power ±1.2%
(b) Flow Rate ±1.5%
(c) Efficiency ±2.0%

Where favorable measurement conditions exist and best methods can be used, smaller uncertainties should result. Any test with uncertainties greater than the above shall not qualify as an ASME Code test.

This Code contains recommended procedures for index testing and describes the purposes for which index tests may be used.

Copyright ASME International
Provided by IHS under license with ASME
No reproduction or networking permitted without license from IHS
Not for Resale

SECTION 2
DEFINITIONS AND DESCRIPTION OF TERMS

2.1

The code on Definitions and Values, ASME PTC 2, and referenced portions of Supplements on Instruments and Apparatus, ASME PTC 19 Series, shall be considered as part of this Code. Their provisions shall apply unless otherwise specified. Common terms, definitions, symbols and units used throughout this Code are listed in this section. Specialized terms are explained where they appear. The following definitions apply to this Code:

(a) Machine means any type of hydraulic turbine or pump-turbine.

(b) Turbine means a machine operating in the turbine mode.

(c) Pump means a machine operating in the pumping mode.

(d) Pump-turbine is a machine that is capable of operating as a pump and as a turbine.

(e) Runner means turbine runner or pump impeller.

(f) Run comprises the readings and/or recordings sufficient to calculate performance at one operating condition.

(g) Point is established by one or more consecutive runs at the same operating conditions and unchanged wicket gate, blade or valve openings.

(h) Test comprises a series of points and results adequate to establish the performance over the specified range of operating conditions.

(i) Parties to the Test for acceptance tests, are those individuals designated in writing by the purchaser and machine suppliers to make the decisions required in this Code. Other agents, advisors, engineers, etc. hired by the Parties to the Test to act on their behalf or otherwise, are not considered, by this Code, to be Parties to the Test.

2.2

Clarification of any term, definition or unit of measurement in question shall be agreed to in writing by the Parties to the Test before the test.

Table 2.3 Conversion Factors Between SI and U.S. Customary Units of Measure

The following selected conversion factors between the SI and U.S. Customary units of measure are listed here for convenience.

SI to U.S.		U.S. to SI
1 N = 0.224809 lb	Force	1 lb = 4.44822 N
1,000 kg = 68.5218 slugs 1 kg = 2.20462 lb-mass	Mass	1 slug = 14.5939 kg = 32.1740 lb-mass 1 lb-mass = 0.453592 kg
1 m = 3.28084 ft	Length	1 ft = 0.3048 m
T °C = (T × 1.8 + 32) °F	Temperature	T °F = (T − 32) / 1.8 °C
1 bar = 100 kPa = 14.5038 lb/in.^{2}	Pressure	lb/in.^{2} = 6.89476 kPa
1 m^3/s = 35.3147 ft^3/s	Flow Rate	1000 ft^3/sec = 28.3168 m^3/s
1000 kg/m^3 = 1.94032 slugs/ft^3 = 62.4280 lb-mass/ft^3	Density	1 slug/ft^3 = 515.379 kg/m^3
1 kW = 1.34102 hp	Power	1 hp = 0.745706 kW
g_o = 9.80665 m/s^2	Standard Gravity Acceleration	g_o = 32.1740 ft/s^2

Copyright ASME International
Provided by IHS under license with ASME
No reproduction or networking permitted without license from IHS
Not for Resale

2.3

The International System of Units (SI) is used throughout this Code with U.S. Customary Units shown in parentheses (see Table 2.3). The code on Definitions and Values, ASME PTC 2, provides conversion factors for use with ASME performance tests.

2.4

The symbols, terms, definitions and units in this Code are listed in Table 2.4A. See Figs. 2.4A through 2.4E for a graphical definition of certain terms.

2.4.1 Remarks Concerning Table 2.4A and Remainder of Code. The following subscripts are used throughout the Code to give the symbols a specific meaning:

(a) "1" refers to the high pressure side of the machine, or as otherwise defined.

(b) "*1p*" refers to the high pressure pool.

(c) "2" refers to the low pressure side of the machine, or as otherwise defined.

(d) "*2p*" refers to the low pressure pool.

(e) "*spec*" refers to the specified conditions stated in purchase specification.

(f) "*T*" indicates measured value during test, or as otherwise defined.

(g) "*O*" indicates static or zero flow conditions.

(h) "*c*" indicates runner cavitation reference elevation for determining plant cavitation factor when used with *Z* (see para. 2.5).

(i) "*t*" refers to a turbine.

(j) "*p*" refers to a pump.

Density of a liquid used in a manometer for the pressure measurement is related to the mid height of the liquid column.

2.5

By agreement between the Parties to the Test, the runner reference elevation Z_c for determining the plant cavitation factor may be selected at the location where the development of cavitation has a predominant influence on the performance of the machine. In the absence of such agreement, the reference elevation Z_c shall be as shown in Fig. 2.5.

2.6

Some definitions in this Code may differ from those customarily associated with centrifugal pumps.

Copyright ASME International
Provided by IHS under license with ASME
No reproduction or networking permitted without license from IHS Not for Resale

Table 2.4A
Letter Symbols and Definitions (See Figs. 2.4A through 2.4E)

SYMBOL	TERM	DEFINITION	UNITS SI	UNITS U.S.
A	Flow Section Area	Area of water passage cross section normal to general direction of flow.	m^2	ft^2
A_1	Area of High Pressure Section	Area of agreed flow section in machine high pressure passage between machine and any valve.	m^2	ft^2
A_2	Area of Low Pressure Section	Area of agreed flow section in machine low pressure passage between machine and any valve.	m^2	ft^2
F	Force		N	lb
g	Local Gravitational Acceleration	Value of acceleration due to gravity at a given geographical location. (See Table 2.4B)	m/s^2	ft/s^2
H_G	Gross Head	Water elevation difference between upper pool and lower pool. $H_G = Z_{1p} - Z_{2p}$	m	ft
H_o	Static Head	Water elevation difference between upper pool and lower pool at zero flow rate. $H_O = Z_{1po} - Z_{2po}$	m	ft
H	Net Head	Difference between Total Head of high pressure section and Total Head of low pressure section corrected for buoyancy of water in air. $H = (Z_1 + h_1 - Z_2 - h_2)\,[1 - (\rho_a/\rho)] + (h_{v1} - h_{v2})$	m	ft
H_1	Total Head of High Pressure Section	Sum of potential, pressure and velocity heads at machine high pressure section. $H_1 = Z_1 + h_1 + h_{v1}$	m	ft
H_2	Total Head of Low Pressure Section	Sum of potential, pressure and velocity heads at machine low pressure section. $H_2 = Z_2 + h_2 + h_{v2}$	m	ft
h	Pressure Head	Height of water column under prevailing conditions equivalent to static pressure at given point in the water passage. $h = p/[g\,(\rho - \rho_a)]$	m	ft
h_a	Barometric Pressure Head	Height of water column under prevailing conditions equivalent to atmospheric pressure (absolute) at given latitude and elevation. $h_a = \frac{p_a}{g\,(\rho - \rho_a)}$	m	ft
h_1	Pressure Head at High Pressure Section	Height of water column under prevailing conditions equivalent to gage pressure at horizontal centerline of machine high pressure section, A_1.	m	ft
h_2	Pressure Head at Low Pressure Section	Height of water column under prevailing conditions equivalent to gage pressure at horizontal centerline of machine low pressure section, A_2.	m	ft
H_L	Head Loss	Total head loss between any two sections of water passage.	m	ft
H_{L1}	Head Loss on High Pressure Side	Head loss between machine and upper pool, including entrance/exit, trashrack, conduit and valve losses. $H_{L1} = Z_{1p} - H_1$	m	ft
H_{L2}	Head Loss on Low Pressure Side	Head loss between machine and lower pool, including entrance/exit, trashrack, conduit and valve loss. $H_{L2} = Z_{2p} - H_2$	m	ft
h_{sv}	Net Positive Suction Head NPSH	The absolute pressure head at the first stage runner reference elevation (Z_c), minus the vapor pressure head of the liquid. $NPSH = (h_a + Z_2 + h_2 - Z_c) - h_{vp}$	m	ft
h_v	Velocity Head	Height of water column under prevailing conditions equivalent to kinetic pressure head in a given flow section. $h_v = \frac{v^2}{2g}$	m	ft

Copyright ASME International
Provided by IHS under license with ASME
No reproduction or networking permitted without license from IHS
Not for Resale

Table 2.4A
Letter Symbols and Definitions (See Figs. 2.4A through 2.4E) (Cont'd)

SYMBOL	TERM	DEFINITION	UNITS SI	UNITS U.S.
h_{vp}	Vapor Pressure Head	Height of water column equivalent to vapor pressure (absolute) of water at temperature of turbine discharge or pump inlet.	m	ft
n	Speed	Rotational speed.	rpm	rpm
M	Mass		kg	slug
L	Length		m	ft
P	Turbine Power Output or Pump Power Input	Power delivered by the turbine shaft or applied to the pump shaft.	kW	hp
P_e	Generator Power Output or Motor Power Input	Net electrical power delivered by generator or supplied to motor	kW	kW
P_w	Water Power	Power equivalent of flow rate at net head. $P_w = \rho gQH/1000$ ($P_w = \rho gQH/550$)	kW	hp
p	Gage Pressure	Static pressure at any point in water passage relative to prevailing atmospheric pressure.	kPa	lb/ft^2
p_a	Barometric (Ambient) Pressure	Absolute atmospheric pressure at given elevation above sea level.	kPa	lb/ft^2
p_{vp}	Vapor Pressure	Absolute vapor pressure of water at a given temperature (see Table 2.4C)	kPa	lb/ft^2
p_g	Gage Reading	Actual gage pressure measured in piping at zero reference elevation of instrument.	kPa	lb/ft^2
p_1	Pressure at High Pressure Section	Gage pressure at horizontal centerline of machine high pressure section A_1.	kPa	lb/ft^2
p_2	Pressure at Low Pressure Section	Gage pressure at horizontal centerline of machine low pressure section A_2.	kPa	lb/ft^2
Q	Flow Rate	Volume of water passing through the machine per unit time, including water for seals and thrust relief but excluding water supplied for the operation of auxiliaries and the cooling of all bearings.	m^3/s	ft^3/s
t	Time		s	s
T	Temperature		°C	°F
v	Mean Velocity	Flow rate divided by flow section area.	m/s	ft/s
Z	Potential Head	Elevation of a measurement point relative to common datum.	m	ft
Z_c	Potential Head at Runner Reference Elevation	Elevation of cavitation reference location relative to common datum. (Fig. 2.5)	m	ft
Z_1	Potential Head at High Pressure Section	Elevation of horizontal centerline of machine high pressure section relative to common datum.	m	ft
Z_2	Potential Head at Low Pressure Section	Elevation of horizontal centerline of machine low pressure section relative to common datum.	m	ft

Copyright ASME International
Provided by IHS under license with ASME
No reproduction or networking permitted without license from IHS
Not for Resale

Table 2.4A
Letter Symbols and Definitions (See Figs. 2.4A through 2.4E) (Cont'd)

SYMBOL	TERM	DEFINITION	UNITS SI	UNITS U.S.
Z_{1po}	Potential Head of Upper Pool at Zero Flow	Elevation of upper pool at zero flow rate relative to common datum.	m	ft
Z_{1p}	Potential Head of Upper Pool	Elevation of upper pool relative to a common datum.	m	ft
Z_{2po}	Potential Head of Lower Pool at Zero Flow	Elevation of lower pool at zero flow rate relative to common datum.	m	ft
Z_{2p}	Potential Head of Lower Pool	Elevation of lower pool relative to a common datum.	m	ft
Z_g	Measuring Instrument Potential Head	Elevation of reference point of measuring instrument relative to common datum.	m	ft
η	Efficiency	Turbine: P/P_w, Pump: P_w/P.	...	...
ρ	Density of Water	Mass per unit volume of water at measured temperature and pressure. (See Table 2.4D)	kg/m^3	$slug/ft^3$
ρ_a	Density of Ambient Air	Mass per unit volume of ambient air at measured temperature and barometric pressure. (See Table 2.4E)	kg/m^3	$slug/ft^3$
ρ_{Hg}	Density of Mercury	Mass per unit volume of mercury at measured temperature (See Table 2.4F)	kg/m^3	$slug/ft^3$
σ	Cavitation Factor	$\sigma = \frac{h_{sv}}{H}$	...	...
ω	Angular Speed	Radians per second.	rad/s	rad/s
D	Machine Reference Diameter	Pelton: Pitch diameter Kaplan: Discharge ring diameter at centerline of Runner Blades Francis: Runner throat diameter.	m	ft
u	Velocity of the runner at diameter *D*	$u = \omega \frac{D}{2} = \frac{\pi D n}{60}$	m/s	ft/s
ν	Kinematic Viscosity of water		m^2/s	ft^2/s

Copyright ASME International
Provided by IHS under license with ASME
No reproduction or networking permitted without license from IHS
Not for Resale

Table 2.4B Acceleration of Gravity as a Function of Lattitude and Altitude

Latitude (deg)	SI Units (m/s^2)							
	Altitude Above Mean Sea Level (m)							
	0	500	1000	1500	2000	2500	3000	3500
0	9.780	9.779	9.777	9.776	9.774	9.773	9.771	9.770
10	9.782	9.780	9.779	9.777	9.776	9.774	9.773	9.771
20	9.786	9.785	9.783	9.782	9.780	9.779	9.777	9.776
30	9.793	9.792	9.790	9.789	9.787	9.786	9.784	9.782
40	9.802	9.800	9.799	9.797	9.795	9.794	9.792	9.791
50	9.811	9.809	9.808	9.806	9.805	9.803	9.801	9.800
60	9.819	9.818	9.816	9.815	9.813	9.811	9.810	9.808
70	9.826	9.824	9.823	9.821	9.820	9.818	9.817	9.815

Latitude (deg)	U.S. Customary Units (ft/s^2)						
	Altitude Above Mean Sea Level (ft)						
	0	2000	4000	6000	8000	10000	12000
0	32.088	32.082	32.075	32.069	32.063	32.057	32.051
10	32.093	32.087	32.080	32.074	32.068	32.062	32.056
20	32.108	32.101	32.095	32.089	32.083	32.077	32.070
30	32.130	32.124	32.118	32.112	32.106	32.099	32.093
40	32.158	32.152	32.145	32.139	32.133	32.127	32.121
50	32.187	32.181	32.175	32.169	32.163	32.156	32.150
60	32.215	32.209	32.203	32.196	32.190	32.184	32.178
70	32.237	32.231	32.225	32.219	32.213	32.207	32.200

GENERAL NOTES:

(a) Smithsonian Physical Tables, Ninth Revised Edition

(b) Smithsonian Meteorological Tables, Sixth Revised Edition

(c) Gravitational acceleration formula from page 488 of (b), where acceleration g is in m/s^2 and latitude ϕ is in degrees:

$$g = 9.80616\ (1 - 0.0026373 \cos(2\phi) + 0.0000059 \cos^2(2\phi))$$

(d) Additive correction Δg (m/s^2 or ft/s^2) for altitude Z (m or ft, respectively) above mean sea level:

$$\Delta g = -3.086 \times 10^{-6} Z$$

(e) Conversion factor to U.S. Customary Units:

$$g\ (ft/s^2) = g\ (m/s^2)/0.3048$$

(f) The standard value of gravitational acceleration adopted by the International Commission on Weights and Measures is $g = 9.80665\ m/s^2$ or $32.17405\ ft/s^2$.

Copyright ASME International
Provided by IHS under license with ASME
No reproduction or networking permitted without license from IHS
Not for Resale

TABLE 2.4C
Vapor Pressure of Distilled Water p_{vp} (Pa) as a Function of Temperature

Temperature (°C)	Vapor Pressure p_{vp}(Pa)	Temperature (°C)	Vapor Pressure p_{vp}(Pa)	Temperature (°C)	Vapor Pressure p_{vp}(Pa)	Temperature (°C)	Vapor Pressure p_{vp}(Pa)
0	611						
1	657	21	2488	11	1313	31	4495
2	706	22	2645	12	1403	32	4758
3	758	23	2810	13	1498	33	5034
4	814	24	2985	14	1599	34	5323
5	873	25	3169	15	1706	35	5627
6	935	26	3363	16	1819	36	5945
7	1002	27	3567	17	1938	37	6280
8	1073	28	3782	18	2064	38	6630
9	1148	29	4008	19	2198	39	6997
10	1228	30	4246	20	2339	40	7381

GENERAL NOTES:

(a) Reference: Haar, Gallagher, Kell: NBS/NRC Steam Tables, 1984, Hemisphere Publishing Corp., Washington - New York - London.

(b) The vapor pressure of water can be calculated between the temperatures $\theta = 0°C$ and $\theta = 40°C$ according to the following empirical equation:

$$p_{vp} = 10^{(2.7862 + 0.0312\theta - 0.000104\theta^2)}$$ with an error smaller than ±7Pa.

Copyright ASME International
Provided by IHS under license with ASME
No reproduction or networking permitted without license from IHS
Not for Resale

Table 2.4.D Density of Water at a Given Temperature and Pressure

Density of Water ρ (kg/m^3)

Temperature T (°C)	Absolute pressure P_{abs} (bars)								
	1	5	10	20	30	40	50	100	150
0	999.84	1000.04	1000.30	1000.80	1001.31	1001.82	1002.32	1004.82	1007.30
1	999.90	1000.10	1000.35	1000.86	1001.36	1001.86	1002.36	1004.84	1007.30
2	999.94	1000.14	1000.39	1000.89	1001.39	1001.89	1002.38	1004.85	1007.29
3	999.96	1000.16	1000.41	1000.91	1001.40	1001.90	1002.39	1004.84	1007.26
4	999.97	1000.17	1000.42	1000.91	1001.40	1001.89	1002.38	1004.81	1007.22
5	999.97	1000.16	1000.41	1000.90	1001.38	1001.87	1002.36	1004.77	1007.17
6	999.94	1000.14	1000.38	1000.87	1001.35	1001.84	1002.32	1004.72	1007.10
7	999.90	1000.10	1000.34	1000.82	1001.31	1001.79	1002.27	1004.65	1007.02
8	999.85	1000.04	1000.28	1000.76	1001.24	1001.72	1002.20	1004.57	1006.93
9	999.78	999.98	1000.22	1000.69	1001.17	1001.65	1002.12	1004.48	1006.82
10	999.70	999.89	1000.13	1000.61	1001.08	1001.55	1002.03	1004.38	1006.70
12	999.50	999.69	999.92	1000.39	1000.86	1001.33	1001.80	1004.13	1006.43
14	999.25	999.43	999.67	1000.13	1000.60	1001.06	1001.52	1003.83	1006.11
16	998.94	999.13	999.36	999.82	1000.28	1000.74	1001.20	1003.49	1005.75
18	998.59	998.78	999.00	999.46	999.92	1000.38	1000.83	1003.10	1005.35
20	998.20	998.38	998.61	999.06	999.52	999.97	1000.43	1002.68	1004.91
22	997.77	997.95	998.17	998.63	999.08	999.53	999.98	1002.22	1004.43
24	997.29	993.92	997.70	998.15	998.60	999.05	999.49	1001.72	1003.92
26	996.78	996.96	997.19	997.63	998.08	998.53	998.97	1001.18	1003.37
28	996.23	996.41	996.64	997.08	997.53	997.97	998.41	1000.61	1002.79
30	995.65	995.83	996.05	996.49	996.94	997.38	997.82	1000.01	1002.18
32	995.03	995.21	995.43	995.87	996.31	996.75	997.19	999.37	1001.54
34	994.38	994.55	994.77	995.22	995.65	996.09	996.53	998.71	1000.86
36	993.69	993.87	994.09	994.53	994.96	995.40	995.84	998.01	1000.15
38	992.97	993.15	993.92	993.80	994.24	994.68	995.11	997.27	999.42
40	992.22	992.40	992.62	993.05	993.49	993.92	994.36	996.51	998.65

Density of Water ρ (slug/ft^3)

Temperature T (°F)	Absolute Pressure P_{abs} (psia)								
	14	15	25	50	100	200	500	1000	2000
32	1.94001	1.94001	1.94008	1.94025	1.94059	1.94127	1.94330	1.94667	1.95332
34	1.94013	1.94014	1.94020	1.94037	1.94071	1.94138	1.94340	1.94673	1.95334
36	1.94021	1.94022	1.94029	1.94045	1.94079	1.94146	1.94345	1.94676	1.95331
38	1.94026	1.94026	1.94033	1.94050	1.94083	1.94149	1.94347	1.94676	1.95326
40	1.94026	1.94027	1.94033	1.94050	1.94083	1.94149	1.94345	1.94671	1.95317
42	1.94023	1.94024	1.94030	1.94046	1.94079	1.94144	1.94340	1.94663	1.95304
44	1.94016	1.94017	1.94023	1.94039	1.94072	1.94137	1.94330	1.94652	1.95289
46	1.94006	1.94006	1.94013	1.94029	1.94061	1.94125	1.94318	1.94637	1.95270
48	1.93992	1.93992	1.93999	1.94015	1.94047	1.94111	1.94302	1.94619	1.95248
50	1.93974	1.93975	1.93981	1.93997	1.94029	1.94093	1.94283	1.94598	1.95223
55	1.93917	1.93917	1.93924	1.93939	1.93971	1.94033	1.94221	1.94532	1.95149
60	1.93840	1.93841	1.93847	1.93863	1.93894	1.93956	1.94141	1.94449	1.95058
65	1.93746	1.93747	1.93753	1.93768	1.93799	1.93860	1.94044	1.94348	1.94951
70	1.93636	1.93637	1.93643	1.93658	1.93689	1.93749	1.93931	1.94233	1.94830
75	1.93512	1.93512	1.93518	1.93533	1.93564	1.93624	1.93804	1.94103	1.94695
80	1.93373	1.93373	1.93379	1.93394	1.93424	1.93484	1.93663	1.93960	1.94548
85	1.93220	1.93221	1.93227	1.93241	1.93271	1.93331	1.93508	1.93803	1.94387

Continued

Copyright ASME International
Provided by IHS under license with ASME
No reproduction or networking permitted without license from IHS
Not for Resale

Density of Water ρ (slug/ft^3) (Cont'd)

Temperature T (°F)	Absolute Pressure P_{abs} (psia)								
	14	15	25	50	100	200	500	1000	2000
90	1.93054	1.93055	1.93060	1.93075	1.93105	1.93164	1.93341	1.93634	1.94215
95	1.92875	1.92876	1.92882	1.92896	1.92926	1.92985	1.93161	1.93452	1.94030
100	1.92684	1.92685	1.92690	1.92705	1.92734	1.92793	1.92968	1.93259	1.93835
105	1.92481	1.92482	1.92488	1.92502	1.92531	1.92590	1.92765	1.93054	1.93628

GENERAL NOTES:
(a) Calculation of intermediate values and interpolation from the tables are equally valid.
(b) The numerical values of Table 2.4D were calculated from equation in Table 2.4D. The results were converted to U.S. Customary units of measure using the factors in Table 2.3.

The numerical values of Table 2.4D were calculated from the following equation:

$$\rho = 100 \times \left[\sum_{i=0}^{3} \sum_{j=0}^{3} R_{ij} \times (T - T_o)^j \times (P_{abs} + 200)^{(i-1)} \right]^{-1}$$

where

ρ = density of water (kg/m^3)
P_{abs} = absolute pressure of water at the High Pressure Section (bar)
T = temperature of water at the High Pressure Section (°C)
T_o = 0°C for the temperature range of 0 to 20°C
T_o = 20°C for the temperature range of 20 to 50°C
Rij coefficients for the temperature range of 0 to 20°C

	j=0	j=1	j=2	j=3
i = 0	4.465741557E-05	-5.594500697E-05	3.402591955E-06	-4.136345187E-08
i = 1	1.010693802E-01	-1.513709263E-05	1.063798744E-06	-8.146078995E-09
i = 2	-5.398392119E-06	4.672756685E-08	-1.194765361E-09	1.366322053E-11
i = 3	7.780118121E-10	-1.619391322E-11	5.883547485E-13	-8.754014287E-15

R_{ij} coefficients for the temperature range of 20 to 50°C

	j=0	j=1	j=2	j=3
i = 0	-4.410355650E-05	3.052252898E-05	9.207848427E-07	-2.590431198E-08
i = 1	1.011269892E-01	1.763956234E-05	5.750340044E-07	-1.923769978E-09
i = 2	-4.832441163E-06	1.533281704E-08	-3.749721294E-10	1.322804180E-12
i = 3	6.194433327E-10	-3.164540431E-12	6.311389123E-14	2.469249342E-16

GENERAL NOTES:
(a) Herbst, G., Rogener, H: *Neue kanonische Zustandsgleichung des Wassers.* Fortschritt Berichte VDI-Z, Reihe 6, Nr. 50 (1977).
(b) Kell, G.S., Whalley, E.: *Re-analysis of the Density of Liquid Water in the Range 0 to 150°C and 0 to 1 kbar.* Paper presented at the 8th Int. Conf. Prop. Steam, Giens (1974)
(c) Kell, G.S., McLaurin, G. E., Whalley, E.: *The PVT Properties of Liquid Water in the Range 150 to 350°C.* Paper presented at the 8th Int. Conf. Prop. Steam, Giens (1974)

Copyright ASME International
Provided by IHS under license with ASME
No reproduction or networking permitted without license from IHS
Not for Resale

Table 2.4E Density of Dry Air

SI Units		U.S. Customary Units		
			Density	
Altitude (m)	Density (kg/m^3)	Altitude (ft)	(lbm/ft^3)	(slug/ft^3)
0	1.2250	0	0.0765	0.00238
500	1.1673	1000	0.0743	0.00231
1000	1.1116	2000	0.0721	0.00224
1500	1.0581	3000	0.0700	0.00218
2000	1.0065	4000	0.0679	0.00211
2500	0.9569	5000	0.0659	0.00205
3000	0.9091	6000	0.0639	0.00199
3500	0.8632	7000	0.0620	0.00193
4000	0.8191	8000	0.0601	0.00187
		9000	0.0583	0.00181
		10000	0.0565	0.00176
		11000	0.0547	0.00170
		12000	0.0530	0.00165

GENERAL NOTES:
(a) Reference: National Advisory Committee for Aeronautics, TN 3182
(b) Density values ρ (kg/m^3) as a function of altitude Z (m) were calculated from

$$\rho = 1.225\,(1 - 0.0065Z/288.16)^{4.2561}$$

(c) Conversion factors to U.S. Customary Units:

$$\rho\,(\text{lbm/ft}^3) = \rho\,(\text{kg/m}^3)/16.01846$$
$$1 \text{ slug} = 32.1740 \text{ lbm}$$

Copyright ASME International
Provided by IHS under license with ASME
No reproduction or networking permitted without license from IHS
Not for Resale

Table 2.4F Density of Mercury

SI Units				U.S. Customary Units					
Temperature (°C)	Density (kg/m^3)	Temperature (°C)	Density (kg/m^3)	Temperature (°F)	Density (lbm/ft^3)	(slug/ft^3)	Temperature (°F)	(lbm/ft^3)	density (slug/ft^3)
-10	13619.78	16	13555.70	20	849.74	26.4107	66	845.79	26.2878
-9	13617.30	17	13553.25	22	849.57	26.4053	68	845.61	26.2825
-8	13614.83	18	13550.79	24	849.39	26.4000	70	845.44	26.2771
-7	13612.36	19	13548.34	26	849.22	26.3946	72	845.27	26.2718
-6	13609.89	20	13545.89	28	849.05	26.3893	74	845.10	26.2664
-5	13607.42	21	13543.43	30	848.88	26.3839	76	844.93	26.2611
-4	13604.95	22	13540.98	32	848.71	26.3786	78	844.75	26.2557
-3	13602.48	23	13538.53	34	848.54	26.3733	80	844.58	26.2504
-2	13600.02	24	13536.08	36	848.36	26.3679	82	844.41	26.2451
-1	13597.55	25	13533.63	38	848.19	26.3626	84	844.24	26.2397
0	13595.08	26	13531.18	40	848.02	26.3572	86	844.07	26.2344
1	13592.62	27	13528.73	42	847.85	26.3519	88	843.89	26.2290
2	13590.15	28	13526.28	44	847.68	26.3466	90	843.72	26.2237
3	13587.69	29	13523.83	46	847.50	26.3412	92	843.55	26.2184
4	13585.22	30	13521.39	48	847.33	26.3359	94	843.38	26.2130
5	13582.76	31	13518.94	50	847.16	26.3305	96	843.21	26.2077
6	13580.30	32	13516.49	52	846.99	26.3252	98	843.04	26.2023
7	13577.83	33	13514.05	54	846.82	26.3198	100	842.86	23.1970
8	13575.37	34	13511.60	56	846.64	26.3145	102	842.69	26.1916
9	13572.91	35	13509.16	58	846.47	26.3092	104	842.52	26.1863
10	13570.45	36	13506.72	60	846.30	26.3038	106	842.35	26.1810
11	13567.99	37	13504.27	62	846.13	26.2985	108	842.18	26.1756
12	13565.53	38	13501.83	64	845.96	26.2931	110	842.00	26.1703
13	13563.08	39	13499.39						
14	13560.62	40	13496.95						
15	13558.16								

GENERAL NOTES:
(a) Reference: ASME Fluid Meters, 6th Edition, 1971, Table II-1-2
(b) Above tables are computed from the equation

$$\rho = 851.457 - 0.0859301T + 6.20046 \times 10^{-6} T^2$$

where density ρ is in lbm/ft^3 and temperature T is in degrees F. Computed values agree with the table to within ±0.0001%.

(c) Above table is computed for atmospheric pressure. At 100 atmospheres, the density of mercury changes by only 0.018%. Therefore, the compressibility of mercury at pressures normally seen in hydraulic machine operations may be neglected.

Copyright ASME International
Provided by IHS under license with ASME
No reproduction or networking permitted without license from IHS
Not for Resale

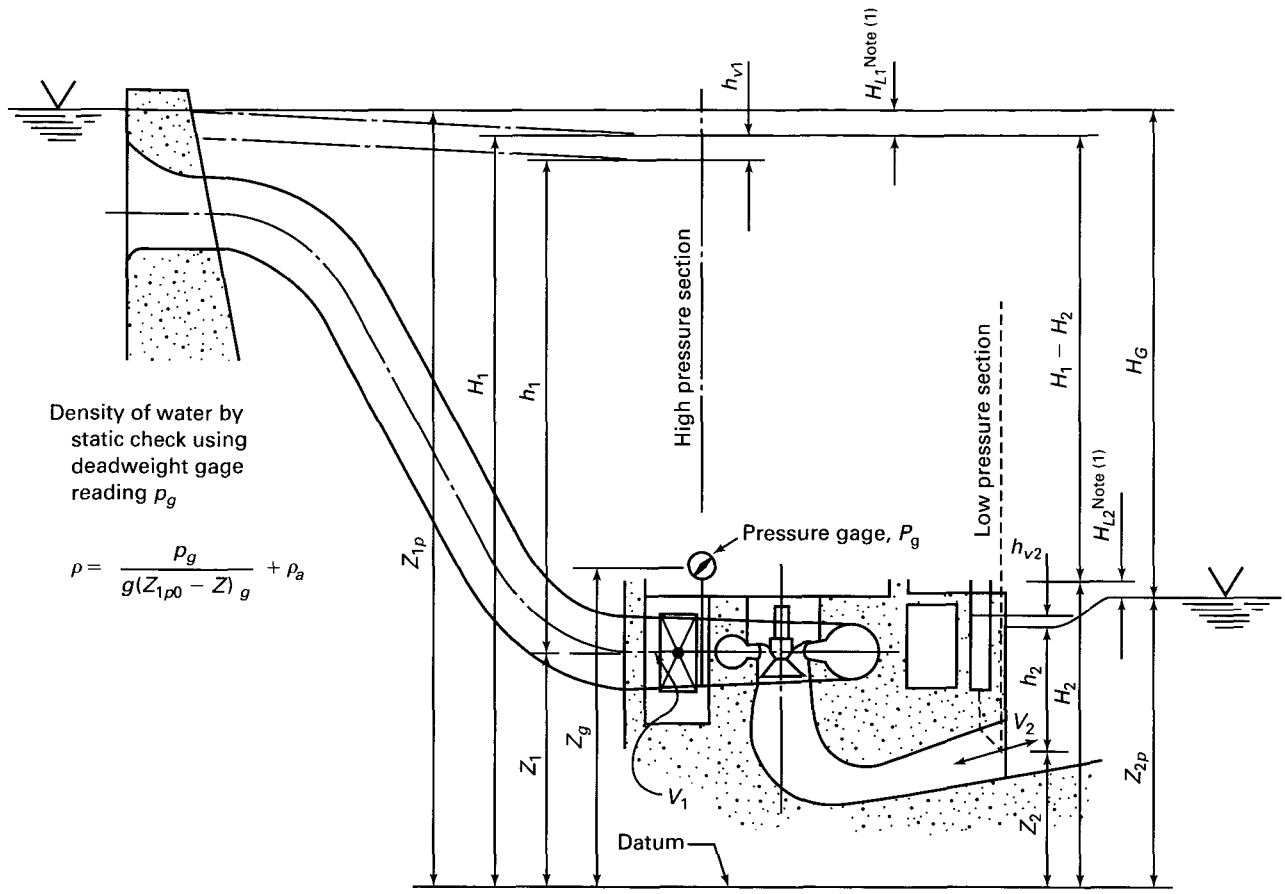

NOTE:

(1) Head losses H_{L1} and H_{L2} are shown for the turbine mode. For the pump mode, the head losses will be of the opposite sign.

GENERAL NOTES:

(a) Z_{1p0} (not shown) will be level Z_{1p} at zero flow rate.

(b) Z_{2p0} (not shown) will be level Z_{2p} at zero flow rate.

Fig. 2.4A Head Definition, Measurement and Calibration, Vertical Shaft Machine With Spiral Case and Pressure Conduit

Copyright ASME International
Provided by IHS under license with ASME
No reproduction or networking permitted without license from IHS
Not for Resale

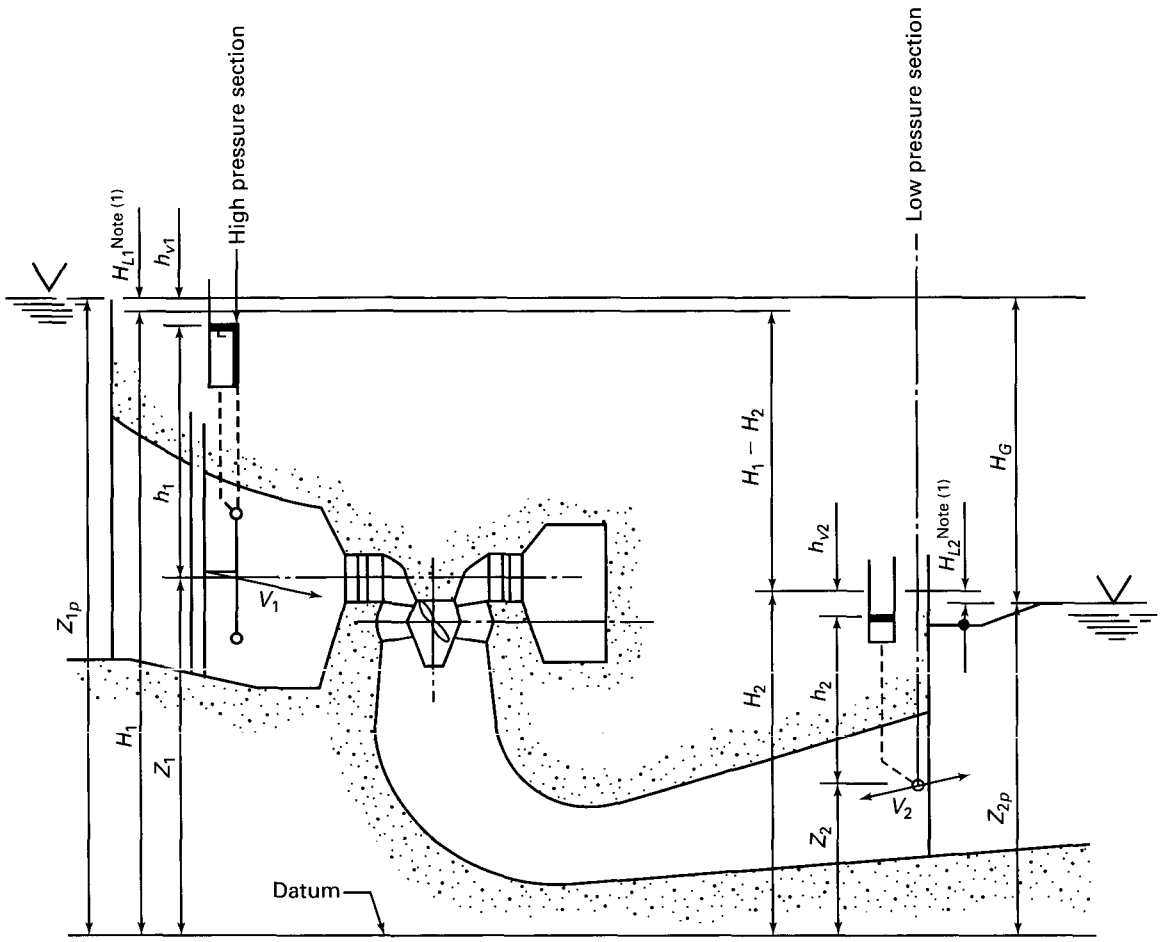

NOTE:

(1) Head losses H_{L1} and H_{L2} are shown for the turbine mode. For the pump mode, the head losses will be of the opposite sign.

GENERAL NOTES:

(a) Z_{1p0} (not shown) will be level Z_{1p} at zero flow rate.

(b) Z_{2p0} (not shown) will be level Z_{2p} at zero flow rate.

Fig. 2.4B Head Definition, Vertical Shaft Kaplan or Propeller Machine with Semi-Spiral Case

Copyright ASME International
Provided by IHS under license with ASME
No reproduction or networking permitted without license from IHS
Not for Resale

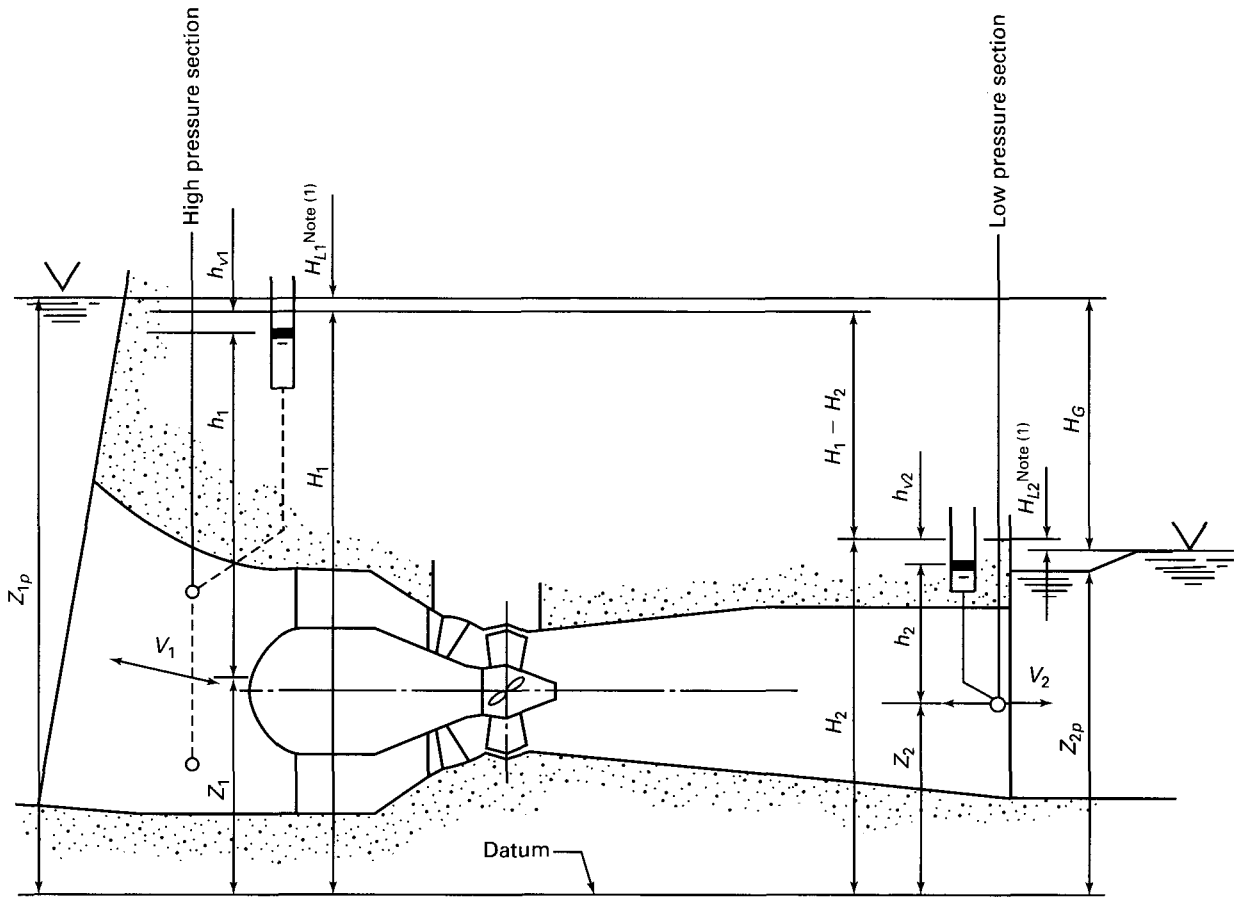

NOTE:

(1) Head losses H_{L1} and H_{L2} are shown for the turbine mode. For the pump mode, the head losses will be of the opposite sign.

GENERAL NOTES:

(a) Z_{1p0} (not shown) will be level Z_{1p} at zero flow rate.

(b) Z_{2p0} (not shown) will be level Z_{2p} at zero flow rate.

Fig. 2.4C Head Definition, Bulb Machine

Copyright ASME International
Provided by IHS under license with ASME
No reproduction or networking permitted without license from IHS
Not for Resale

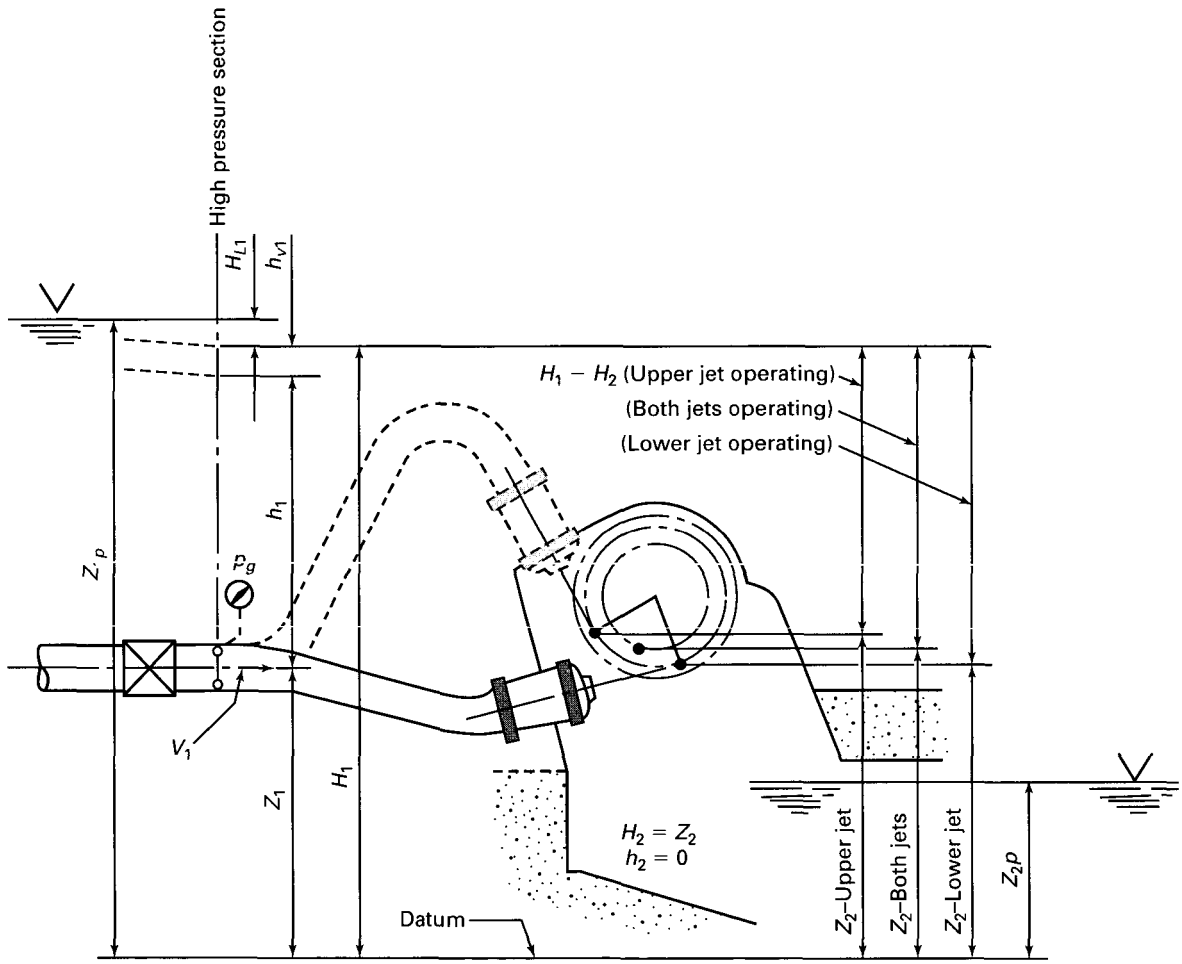

Fig. 2.4D Head Definition, Horizontal Shaft Impulse Turbine (One or Two Jets)

Copyright ASME International
Provided by IHS under license with ASME
No reproduction or networking permitted without license from IHS
Not for Resale

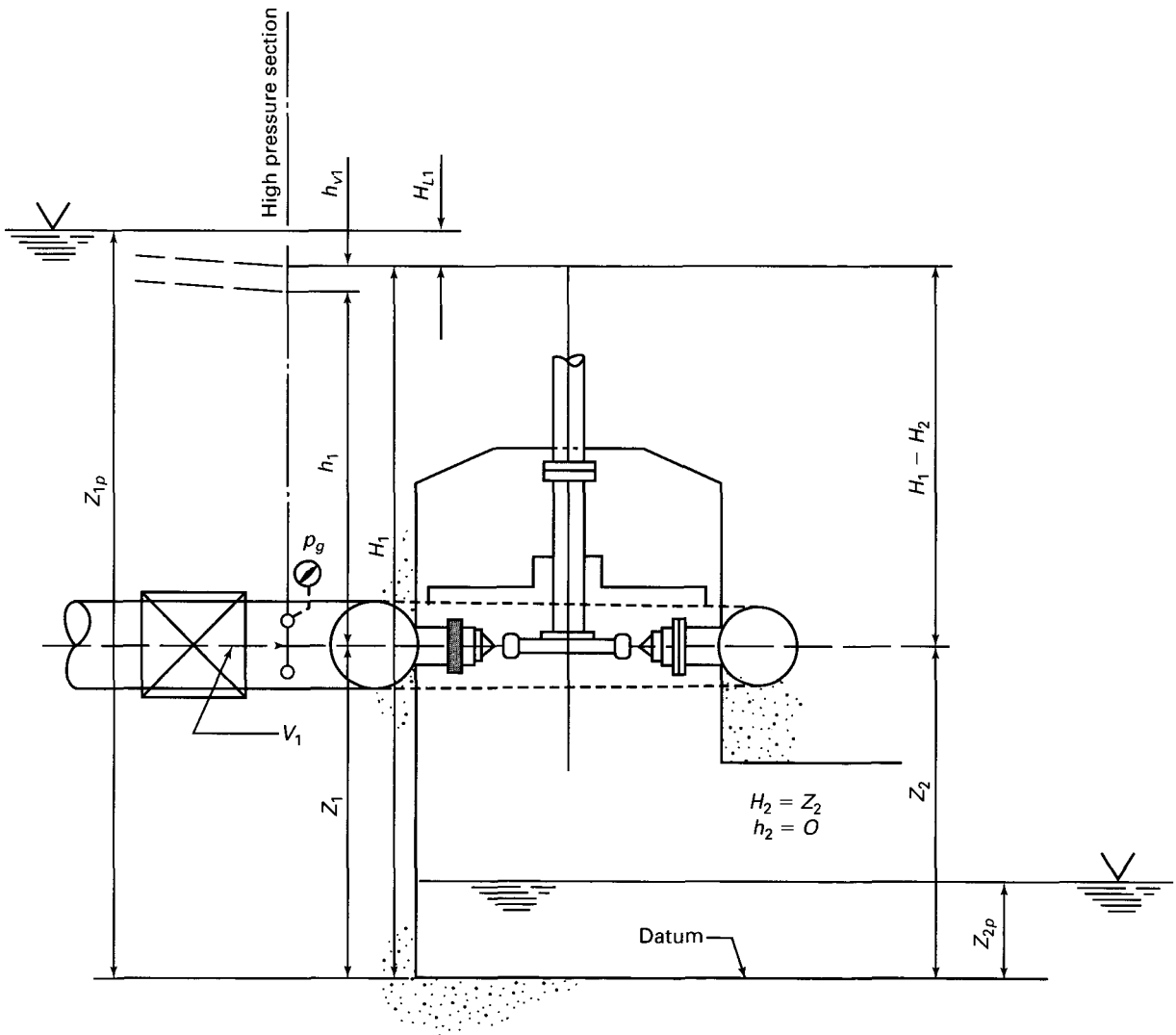

Fig. 2.4E Head Definition, Vertical Shaft Impulse Turbine

Copyright ASME International
Provided by IHS under license with ASME
No reproduction or networking permitted without license from IHS
Not for Resale

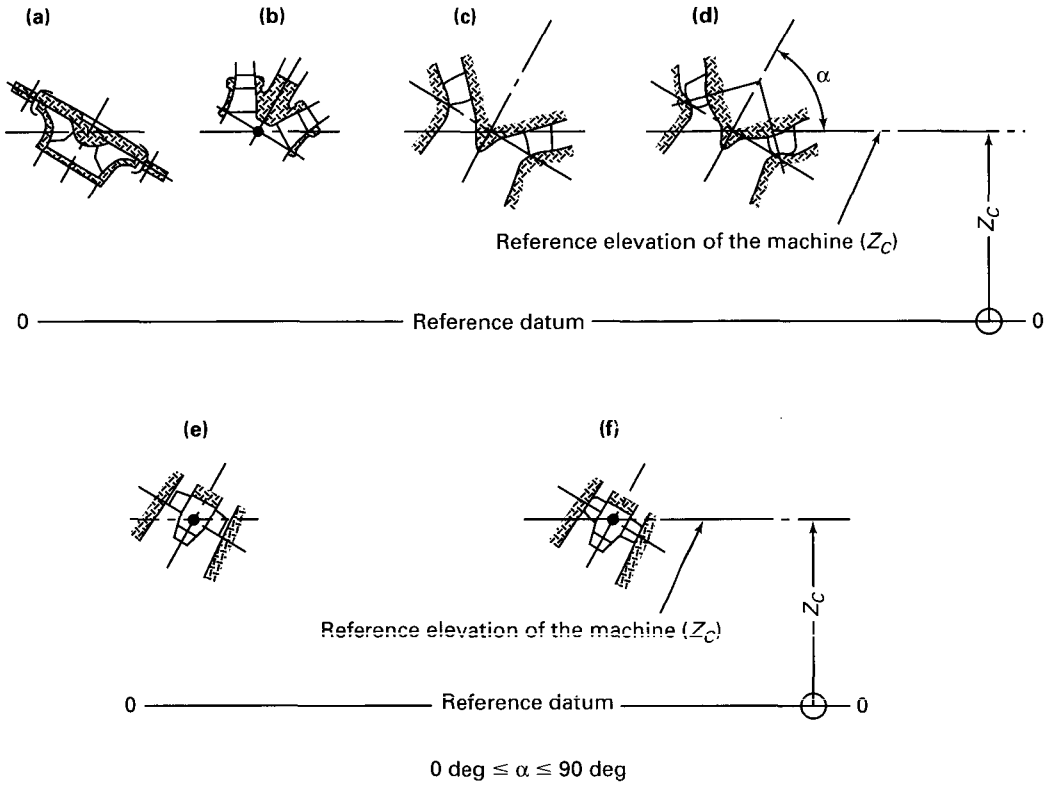

(a) Radial machines, such as Francis turbines and pump–turbines; for multistage machines; low pressure stage.
(b) Diagonal (mixed–flow, semi–axial) machines with fixed runner/impeller blades and with runner/impeller band.
(c) Diagonal (mixed–flow, semi–axial) machines with fixed runner/impeller blades without runner/impeller band.
(d) Diagonal (mixed–flow, semi–axial) machines with adjustable runner/impeller blades.
(e) Axial machines, such as propeller turbines and pump–turbines with fixed runner/impeller blades.
(f) Axial machines, such as Kaplan turbines and pump–turbines with adjustable runner/impeller blades.

Fig. 2.5 Reference Elevation Z_c of Turbines and Pump-Turbines

[ASME thanks the International Electrotechnical Commission (IEC) for permission to reproduce information from its International Standard IEC 60041 (1991-11). All such extracts are copyright of IEC, Geneva, Switzerland. All rights reserved. Further information on the IEC is available from www.iec.ch. IEC has no responsibility for the placement and context in which the extracts and contents are reproduced by ASME; nor is IEC in any way responsible for the other content or accuracy therein.]

Copyright ASME International
Provided by IHS under license with ASME
No reproduction or networking permitted without license from IHS
Not for Resale

SECTION 3
GUIDING PRINCIPLES

3.1

In tests conducted in accordance with this Code, the Parties to the Test shall be represented and shall have equal rights in determining the test methods and procedures and in selecting test personnel unless agreed to otherwise. All arrangements and plans shall be submitted to the Parties to the Test sufficiently in advance for adequate consideration and agreement before testing begins. Any agreement reached between the Parties to the Test shall be in writing.

3.2

To ensure fulfillment of Code conditions, attention should be given to provisions for testing when the plant is being designed and preferably before the machine is purchased. This applies particularly to the arrangements for measurement of flow rate, head, power, and speed. The method for measuring flow rate should be selected during the design stage and stated in the procurement document. Typical items, which should be decided during the design stage and prior to construction are:

(a) flow rate measurement method and devices

(b) location of high pressure and low pressure Sections

(c) number and location of pressure taps and instrument connections

(d) location of flow rate measurement section

(e) location and type of piping for pressure and flow rate measuring devices to be used during the test

(f) provisions for power measurement

3.3

In addition to the discussion in para. 3.2, the following information is useful in planning a performance test.

(a) Determine the availability of test equipment and trained personnel for the measurement of large flow rates with the accuracy required. Obtaining this equipment and the personnel experienced in its installation, adjustment, operation, and the analysis of the results is a major consideration.

(b) Consider the time for testing and plant outage required for each method. Some methods require unwatering to install and remove test equipment. Others require only limited interruption for inspection and testing. These factors are significant to the overall cost of the test. Some methods require a long series of readings for each run. Other methods require only a few seconds to make a single reading for each run. The pressure-time method requires that the interconnected electrical system absorb sudden shedding of load; water passages and other structures may be subject to increased stresses.

3.4

Prior to conducting the test, a written agreement shall be reached by the Parties to the Test as to the specific object and scope of the test and to the test procedures. These shall include the required accuracy of measurement methods and test instrumentation necessary to provide overall test results within the limits of uncertainty required by Section 1.2 of this Code. The agreement shall also reflect the requirements of any applicable specification. Any discernible omissions or ambiguities as to any of the conditions shall be resolved before the test is started. Typical items on which written agreement shall be reached are:

(a) Object of test and type of test.

(b) Operating conditions.

(c) Limits of test uncertainty.

(d) Test schedule and scope (which machines are to be tested and when).

(e) Flow rate measurement device(s) and method to be used.

(f) Methods to be used for measurement of speed, head, and power.

(g) Method to be followed for maintaining constant operating conditions during a test run, including permissible fluctuation of measured variables.

(h) Selection of types and locations of instruments, data acquisition and processing equipment, and techniques for computing results.

(i) Methods of calibrating instruments before and after the test.

(j) Organization of test personnel.

(k) Method of determining acceptable condition of the machine prior to testing.

(l) Need for and application of results of any index tests.

(m) Duration of operation at test load before test readings commence.

(n) Duration of runs including start and stop procedures.

(o) Frequency of observations and number of runs and points.

(p) Method of ensuring synchronization of readings.

Copyright ASME International
Provided by IHS under license with ASME
No reproduction or networking permitted without license from IHS
Not for Resale

(q) Corrections for deviations of test conditions from those specified.

(r) Method of computing results including methods for estimating systematic uncertainties, calculating random uncertainties (see Appendices), and performing a pre-test uncertainty analysis.

(s) Comparison of test results with performance requirements.

(t) Arbitration procedure.

(u) Any objections, noted deficiencies, need for additional devices, changes and calibrations.

(v) Extent and estimated duration of the test. This shall include a statement of the minimum number of runs and the operating conditions, loads and gate settings at which runs are to be made.

(w) Details of measurements. This shall include the degree of accuracy required and the methods to be used for measurement of head, flow rate, speed, power, and time.

3.5

The use of proven electronic instrumentation, computer technology and other data acquisition equipment and software is acceptable under this Code. These instruments and techniques shall be used with due regard to frequency response, sampling rate, data windows, instrument and system accuracy, filtering, shielding and other pertinent considerations. Methods for onsite calibration and/or verification of such data acquisition equipment and software shall be provided.

3.6

The Parties to the Test shall designate an experienced Chief of Test who shall:

(a) Ensure that a written test plan has been prepared.

(b) Be qualified to supervise all on-site calibrations, measurements and calculations necessary to determine the performance of the machine under test.

(c) Exercise authority over all test personnel.

(d) Supervise the conduct of the test in accordance with this Code and any written agreements made prior to the test.

(e) Report on test conditions and be responsible for the computation of results and the preparation of the final report (see Section 6).

(f) Be responsible for ensuring that test instruments have been properly calibrated or have valid calibration documents.

(g) Be responsible for all test measurements.

(h) Make every reasonable effort to ensure that any controversial matters pertaining to the test are resolved.

3.7

The Parties to the Test shall be entitled to have such members of their staff present during the test as required to assure them that the test is conducted in accordance with this Code and in accordance with any written agreements made prior to the test.

3.8

Acceptance testing shall be performed only after dependable operation and after the machine has been found by inspection to be in a condition satisfactory to the Parties to the Test to undergo the test. The Parties to the Test should agree, after consideration of plant operation, head, and flow-rate conditions, when the test is to be performed. This shall be as soon as possible after the machine is handed over to the owner and within the specified warranty period, unless otherwise agreed in writing by the Parties to the Test.

3.9

Dimensions and information regarding the machine, associated equipment and water conduits shall be obtained prior to the test. All drawings of importance for the test and all relevant data, documents, specifications, calibration certificates, and reports on operating conditions shall be examined by the Chief of Test and made available to the Parties to the Test.

3.10

Agreement shall be reached in advance as to the personnel required to conduct the test. Personnel shall have the experience and/or training necessary to enable them to take accurate and reliable readings from the instruments assigned to them.

3.11

A clear and unmistakable communications system shall be established between test personnel. None of the personnel shall be required to take so many readings that lack of time may result in insufficient care and precision. Automatic data acquisition is permissible where the data system has the required accuracy and resolution, the readout is clear and periodic verification readings are made by independent means.

3.12

Careful inspections and checks of all instrumentation shall be carried out before, during and after the test. Prior to the start of the test, an inspection of the machine and its water passages shall be made to verify that:

(a) All machine components which affect performance are in satisfactory condition.

(b) The water does not carry undue quantities of air, bark, leaves, weeds or other foreign elements, which may unfavorably affect the flow rate or operation of the instrumentation.

(c) Pressure taps, piezometer tubes and connecting pipes are clear of obstructions and are properly formed and located.

Copyright ASME International
Provided by IHS under license with ASME
No reproduction or networking permitted without license from IHS Not for Resale

3.13

Unless otherwise provided, head losses between the high-pressure and low-pressure sections are charged to the machine. Other head losses including those due to conduits upstream and/or downstream of the machine intakes, trashracks, gates, valves and the discharge velocity head loss at the conduit exits shall not be charged to the turbine or credited to the pump.

3.14

At installations where an absolute flow rate measurement is not practical or desirable, the index method (paras. 4G.1 through 4G.18) may be used. Index testing makes use of the relative flow rate in order to determine relative machine efficiency.

3.15

In the case of a machine with both adjustable wicket gates and adjustable runner blades, index testing should be carried out before the performance test to determine the best gate and blade combination. The positions of the wicket gates and runner blades for various positions of the operating mechanisms shall be accurately measured and suitable reference scales provided. These scales shall be accessible during operation and their indications shall be recorded during the test.

3.16

For pumped storage installations, with small reservoirs, tests can be conducted conveniently over the entire operating head range. One or more runs at the various gate openings shall be conducted at each of several heads, using machined metal spacers, if necessary, for accurately and positively blocking the gate servomotors at each position.

3.17

For pumped storage installations with large reservoirs it may be convenient to conduct tests at only one point in the head range. At each constant head, sufficient test runs shall be conducted at the same gate opening using metal spacers, if necessary, to reduce the positioning error.

3.18

Preliminary test runs complete with records and calculations shall be conducted to ensure that the equipment, instrumentation, personnel, and procedures are functioning properly. Any problems shall be corrected prior to proceeding with the official test. If agreeable to the Parties to the Test, preliminary runs may be considered to be official runs.

3.19

True copies of all official test data taken manually or electronically, test logs, notes, sample calculations, results, and plots along with pre-test instrument calibrations shall be provided to the Parties to the Test prior to the dismantling of the test instrumentation or departure of the test group from the site. Programs that are used to calculate results may be considered as proprietary. However, sufficient information needs to be provided for the true copies which permits the duplicated data to be used to calculate the test results. These copies will provide the Parties to the Test with all information plus ensure the safekeeping and integrity of the test data.

3.20

Preliminary results shall be computed during the course of the test and these results, together with selected important measurements, shall be plotted on graphs. Any run which appears to be inconsistent with the other runs or appears to exceed limits of deviation or fluctuation shall be repeated. However, test records of all runs shall be retained.

3.21

Every reasonable effort shall be made to conduct the test as close as possible to specified operating conditions in order to minimize deviation corrections. Each run shall be conducted under the best steady state conditions obtainable at the operating point. Once a test has started, adjustments to the equipment under test or the test equipment, which may affect test results, shall not be permitted. Should adjustments be deemed necessary by the Parties to the Test, prior runs shall be voided and the test restarted.

3.22

Test runs should be made under conditions of constant speed, constant head and constant power within the following limits of variation during an individual run:

(a) Variations in measured speed should not exceed ±0.5% of the average speed measured.

(b) Variations in measured head should not exceed ±1.0% of the average head measured.

(c) Variations in measured power output or input should not exceed ±1.5% of the average measured power.

3.23

Should the actual average conditions of any test deviate from the corresponding specified conditions, they shall be treated individually as follows:

(a) The actual average speed n_T and net head H_T for each individual test run may deviate from n_{spec} and H_{spec} by as much as ±5% and ±10%, respectively, provided the value of the ratio $n_T/\sqrt{H_T}$ does not differ from that of $n_{spec}/\sqrt{H_{spec}}$ by more than ±1%. The measured flow rate, head, net positive suction head and power shall be converted to values which correspond to

Copyright ASME International
Provided by IHS under license with ASME
No reproduction or networking permitted without license from IHS
Not for Resale

$n_{spec}/\sqrt{H_{spec}}$ by using the equations of Section 5 of this Code. No efficiency correction is required (see Figs. 3.23A and 3.23B, Zone 1).

(b) If the conditions of para. 3.23(a) are not met but n_T is within ±5% of n_{spec}, H_T is within ±10% of H_{spec} and $n_T/\sqrt{H_T}$ is within ±5% of $n_{spec}/\sqrt{H_{spec}}$ then the measured values of flow rate, head, net positive suction head and power may be converted to specified values using characteristic test curves of an identical or homologous machine tested over the operating range in question (see Figs. 3.23A and 3.23B, Zone 2).

(c) The method of making the conversion for operation at other selected speeds, the permissible deviation from specified conditions, and the basis for making correction for electrical and mechanical characteristics shall be determined by prior agreement.

(d) If, in the pumping mode, it is not possible to test within the specified head range, discharge throttling may be used to perform the test, by agreement, within the specified head range.

Copyright ASME International
Provided by IHS under license with ASME
No reproduction or networking permitted without license from IHS
Not for Resale

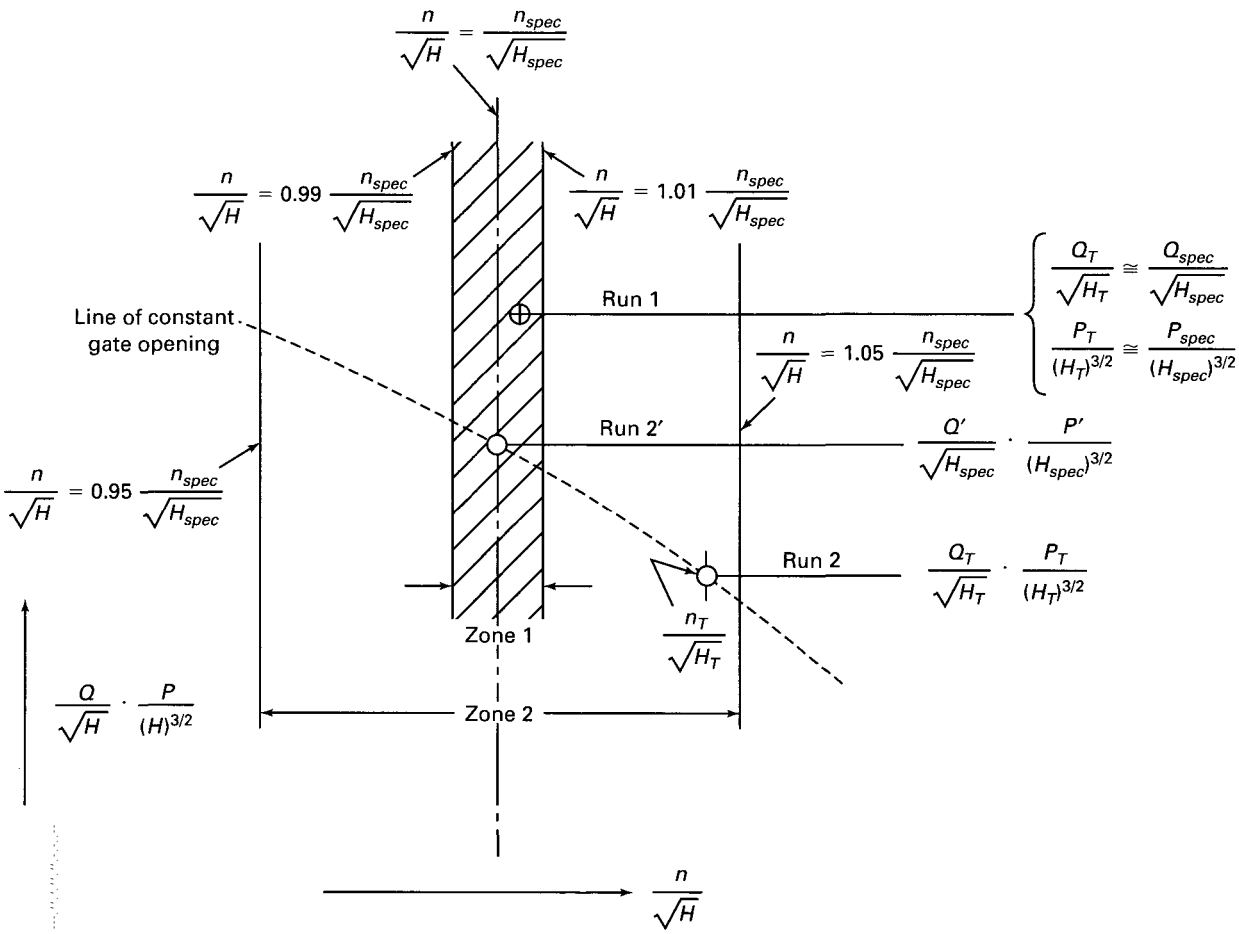

Fig. 3.23A Limits of Permissible Deviations from Specified Conditions Operating in Turbine Mode

Copyright ASME International
Provided by IHS under license with ASME
No reproduction or networking permitted without license from IHS
Not for Resale

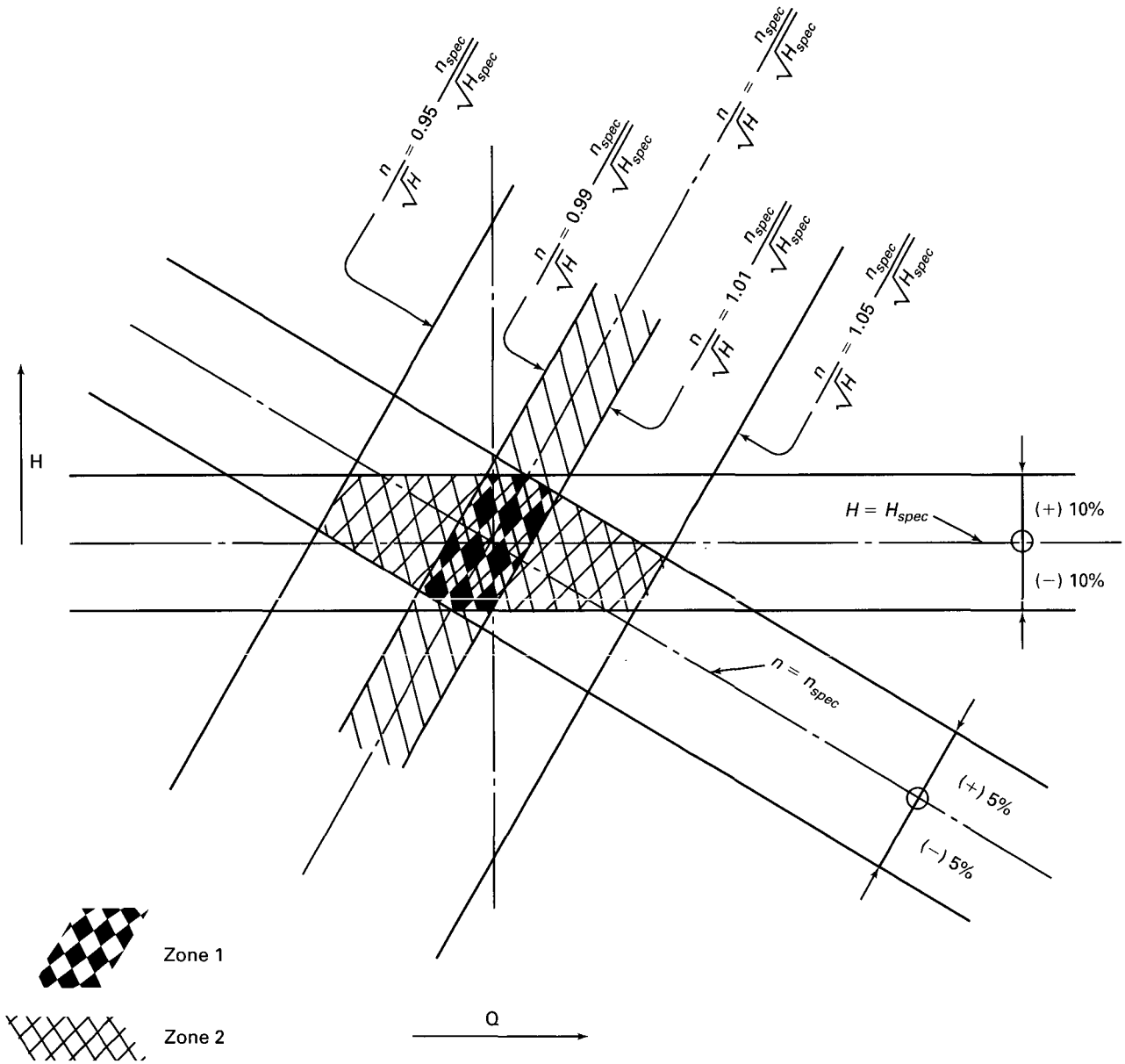

Fig. 3.23B Limits of Permissible Deviations from Specified Conditions Operating in Pump Mode

Copyright ASME International
Provided by IHS under license with ASME
No reproduction or networking permitted without license from IHS
Not for Resale

SECTION 4
INSTRUMENTS AND METHODS OF MEASUREMENT

4A GENERAL

4A.1

This Section describes the instruments and methods to be used for measuring head, flow rate, power, speed, and time. It also includes a description of the index method of measuring relative flow rate.

4A.2

Instruments shall be located so they can be read with precision and convenience by the observers. All instruments shall be clearly and properly identified and their calibration tables or charts shall be readily available. Observers shall be instructed in the proper reading of the instruments and the desired precision of the readings.

4A.3

The precision of all measuring instruments shall be compatible with the degree of accuracy agreed to by the Parties to the Test. The instrument manufacturers, identifying numbers, owner of instruments, and length and type of electrical leads, where applicable, shall be stated in the final report. Refer to IEEE Standard 120.

4A.4

Additional instrumentation may be necessary to maintain the uncertainties required by para. 1.2 when testing at machine operating conditions substantially different than the best operating range of the instrumentation.

4A.5

All instruments/instrument transformers shall be calibrated before and after the test. Those instruments which cannot be calibrated on site shall bear a valid calibration certificate from an accredited laboratory. Before carrying out the test, the necessary correction and calibration curves of all instruments employed shall be available, so that within a short time following a test run, preliminary calculations can be made.

4A.6

After completion of the test, a repeat calibration may be omitted by agreement. Instrument calibrations shall be included in the final report.

4A.7

Mercury and compounds of mercury may cause dangerous environmental problems. The low vapor pressure of mercury presents a serious health hazard if spillage occurs. Extreme care is necessary and strict adherence to applicable regulations concerning the use of mercury shall be followed.

4B HEAD AND PRESSURE MEASUREMENT

4B.1 Bench Marks

A fixed elevation reference point called a main bench mark shall be provided at each machine installation. The elevation of this main bench mark shall be accurately determined, preferably in relation to some established datum such as a geodetic bench mark. The main bench mark shall be clearly labeled to avoid any possibility of error. The elevations of auxiliary bench marks for free water surface levels and pressure gages shall be accurately determined in relation to the main bench mark prior to starting the test. All bench marks and elevation reference points in the head measuring system shall be retained undisturbed until the final test report is accepted.

4B.2

The pressure measuring system should be used to measure the static head conditions. This will aid in verifying the value of the density of water, the functioning of the pressure measurement system and the accuracy of the water level elevations.

4B.3 Free Water Elevation

The measurement section for the determination of a free water elevation shall be chosen to satisfy the following requirements:

(a) the flow shall be steady and free from disturbances; and

(b) the cross-sectional area used to determine the mean water velocity shall be accurately defined and readily measurable.

The inlet water elevation in machine installations with open canals or intakes shall be determined at the agreed inlet section downstream from the trashracks.

The outlet water elevation shall be determined at the agreed section at the end of the outlet conduit. If the above is not practical, a different measurement section may be used in each case at the shortest possible distance from the agreed flow section. The total head determined at the measurement sections shall be corrected by the head loss in the intervening passages between the agreed

Copyright ASME International
Provided by IHS under license with ASME
No reproduction or networking permitted without license from IHS
Not for Resale

flow section and the actual measurement section computed by the Darcy-Weisbach or similar formula.

4B.4 Measuring Wells and Stilling Boxes

If the free water surface is not accessible or sufficiently calm at either the machine inlet or outlet, measuring wells may be used. These wells may also be used to confine and protect submersible pressure cells, when they are used for water surface elevation measurement.

The following guidelines apply when submersible pressure cells suspended in pipe-type stilling wells are used:

(a) The diameter of the pipe should provide a clearance of at least 12 mm (½ in.) around the pressure cell, to allow the water surface in the pipe to follow the water surface at the measurement location.

(b) If the measurement location is such that there is no mean flow past the location, then a simple open-ended pipe may be inserted into the water. This is often the case in gate slots at elevations above the conduit ceiling, or against a wall which is above the machine discharge conduit (e.g., downstream face above a draft tube in turbine mode).

(c) When used in inlet gate slots with multiple inlet conduits, at least one measurement location should be provided in each slot.

(d) When used at draft tube exit, at least one measurement location should be provided for each exit bay with a minimum of two per draft tube.

(e) If the stilling well is installed in the flow, it should be as small in diameter as practical, and should be attached to a wall or other location where the flow velocity is low. The end of the well should be capped, and at least six square-edged holes with a diameter of at least 6 mm (¼ in.) with a combined area of no more than ¼ of the cross-sectional area of the pipe should be evenly spaced around the pipe on a plane at least two pipe diameters below the pressure cell. When installed in the flow in this manner, the uncertainty in the head measurement can be estimated as one-half of the velocity head at the stilling well location.

(f) The output of the pressure cell should be sampled at a sufficient frequency that water-surface fluctuations occurring in the pipe can be accurately averaged over the test run.

The following guidelines apply if a float-gage type stilling well is used:

(a) The area of the measuring well should be such that the float gage may respond freely and without interference from the sides of the stilling well.

(b) All connections should be normal to the passage wall at the measurement section and should be covered with a non-corrosive smooth plate having perforation of 6 mm to 10 mm (¼ in. to ⅜ in.) diameter with the area of the perforations equal to or greater than 25% of the connection. Such cover plates should be flush with the wall of the measurement section to eliminate any disturbance.

(c) The connection between the measurement section and the well should have an area of at least 0.01 m^2 (0.1 ft^2)

(d) A flushing valve should be provided at the bottom of the well. It is recommended that at least two measuring wells be provided at each measurement section, one on each side of the passage at the measurement section.

4B.5 Plate Gage

A plate gage consisting of a metal disk suspended from a calibrated flexible steel tape may be used to determine the water elevation in relation to an auxiliary bench mark at the measurement section.

4B.6 Point or Hook Gage

A point gage or hook gage may be used to determine the level of calm water, for example inside stoplog slots, measuring wells, stilling boxes, or upstream of weirs.

4B.7 Float Gage

A float gage may be used and is recommended where the water level is variable. The float diameter should be at least 200 mm (8 in.). When the float is manually displaced, it shall return to within 5 mm (0.2 in.) of its original position. A float diameter of 200 mm (8 in.) is considered adequate for use with a stilling box 250 mm (10 in.) square, which often is the largest size suitable for installation in stoplog slots.

4B.8 Staff Gage

A fixed staff gage, installed flush with the wall of the measurement section, may be used where the head is greater than 10 m (33 ft).

4B.9 Liquid Manometers

If the free water surface in the measurement section is inaccessible, its elevation may be determined by means of two or more liquid column manometers. The recommended liquid manometer is a differential type with inverted U-tube. One leg of the U-tube is connected to a reference vessel in which water is maintained at a fixed level, the other leg is connected to the free water level. If the free water level to be measured is above the manometer, the water in the upper portion of the U-tube must be depressed by means of compressed air or nitrogen. If, however, the free water level to be measured is below the manometer, the levels in the two U-tube legs must be raised by suction. The connecting tubes to the manometer must allow for ready purging to remove any gas pockets and to maintain the same water temperature throughout the system. They must be sufficiently airtight to avoid leakage of air into sections below atmospheric pressure. The weight of the unbalanced gas column in a differential manometer shall be taken into

Copyright ASME International
Provided by IHS under license with ASME
No reproduction or networking permitted without license from IHS
Not for Resale

account. Further details on manometers can be found in PTC 19.2 Pressure Measurement.

4B.10 Measurements by Means of Compressed Gas

The free water elevation may be determined by means of compressed gas, air or nitrogen, inside a tube (bubbler system). One end of the tube is connected through a regulating valve to a small compressor(s) or gas bottle(s). The other end is open and located at a known elevation below the water surface to be measured. Pressure loss in the tube is small because the flow rate is 3 to 8 bubbles per minute. Gas consumption is small because it is necessary only for small bubbles to escape continuously from the open end of the tube. The bubbler works best in still water, because dynamic effects may cause errors.

4B.11 Pressure Measurement by Pressure Taps

When pressure taps are used to measure the static head at the inlet and/or discharge sections, there shall be at least four pressure taps equally spaced around a circular conduit. There shall be two pressure taps located on each vertical side (at the one quarter and three quarter heights) of a rectangular conduit or at least one at mid-height of both vertical sides of each part of a multiple conduit section. To avoid air and dirt, no pressure taps shall be located at the top or bottom. All pressure taps shall be flush with the walls, normal to the walls, and free from local flow disturbances (see Fig. 4B.11). Care shall be exercised in locating the inlet pressure taps to avoid flow vortices. Location of pressure taps shall be at least three conduit diameters downstream from an elbow, butterfly valve, or other flow-disturbing configuration, and one conduit diameter upstream from the machine inlet section or the manifold inlet section of an impulse turbine. If the distance between the machine and the flow-disturbing configuration is too short to allow the recommended location, the pressure taps shall be located at least one conduit diameter upstream from the flow-disturbing configuration, and the computed head loss in the intervening segment of conduit shall be deducted from the measured head. If the conduit is rectangular, one equivalent conduit diameter shall be the average of height and width.

The wall of the conduit shall be smooth and parallel to the flow for a distance of at least 450 mm (18 in.) upstream and 150 mm (6 in.) downstream from the pressure tap. The surface shall not deviate by more than 0.75 mm (0.03 in.) from a 450 mm (18 in.) straight edge applied parallel to the flow for 150 mm (6 in.) on either side of the pressure tap. Each pressure tap orifice shall be of uniform diameter d, 3 mm to 9 mm ($\frac{1}{8}$ in. to $\frac{3}{8}$ in.) for a depth of at least $2d$ from the wall where d is the diameter of the orifice. The orifice edge shall be free from burrs or irregularities and shall be rounded to a radius not greater than $d/4$. In concrete conduits, each pressure tap shall be located at the center of a corrosion

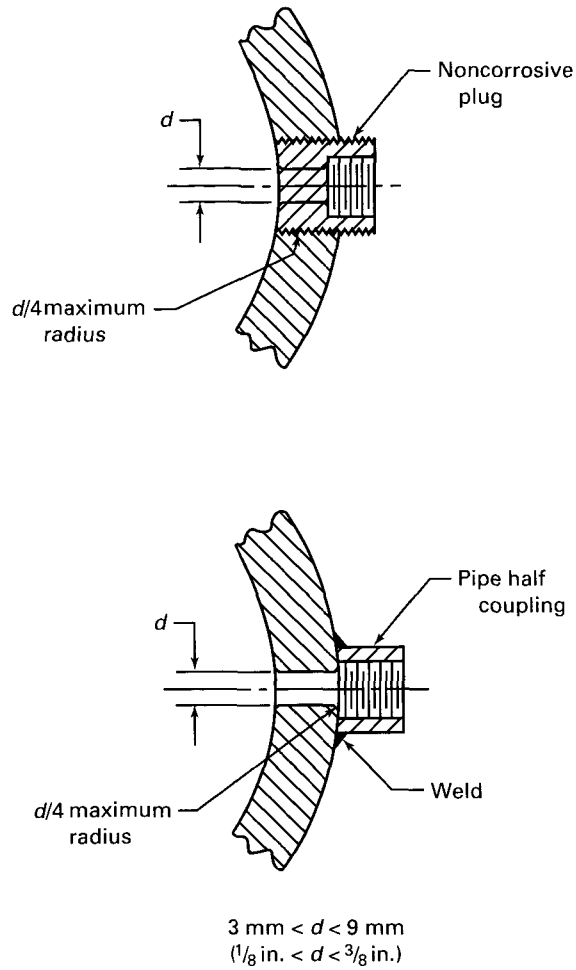

Fig. 4B.11 Pressure Tap

resistant plate at least 300 mm (12 in.) diameter, embedded flush with the surrounding concrete. Pressure taps shall be individually valved so they can be read separately. Pressure taps may be manifolded after the valve provided the manifold piping is not less than 12 mm ($\frac{1}{2}$ in.) inside diameter when measuring devices other than pressure cells are used, and 6 mm ($\frac{1}{4}$ in.) inside diameter when pressure cells are used. All connections shall be leak free. Care must be taken to ensure that all pressure sensing lines are regularly bled and that no air has entered the system.

The condition of measurement, including velocity distribution, and condition of pressure taps shall be such that no pressure tap in the section of measurement shall vary in its reading from the reading of any other by more than 1% of the net head or 20% of velocity head at full gate and specified head, whichever is larger. If any pressure tap reading appears to be in error, the source of the discrepancy shall be determined and removed, or the reading of the tap shall not be used in computing the head. At least two taps shall be used at

Copyright ASME International
Provided by IHS under license with ASME
No reproduction or networking permitted without license from IHS
Not for Resale

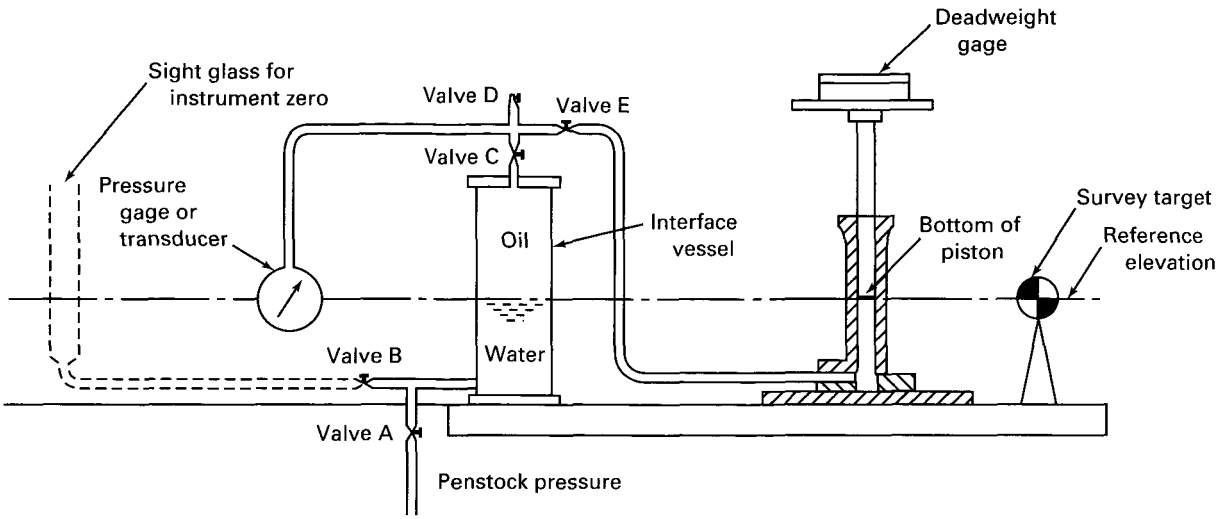

Fig. 4B.12 Calibration Connections for Pressure Gages or Pressure Transducers

each measurement section. If this is not possible, a new measurement section shall be selected and an appropriate correction shall be made for the intermediate head loss. Pressure taps and connecting piping to the devices should be regularly flushed between runs.

4B.12 Pressure Measurement

For the measurement of pressure, liquid manometers, or deadweight gage testers, shall be considered to be primary devices. Precision Bourdon gages or precision pressure transducers are secondary devices, and may be used for pressure measurements provided they are calibrated before and after the test against a primary standard or an NIST-traceable transfer standard. It is recommended that the calibrations of all secondary devices be checked on-site before and after testing, and during testing if specified by the test plan or if requested by the Chief of Test. These on site pre- and post-calibration checks are sufficient to meet the requirements of this paragraph so long as the calibration checks are made using primary devices or NIST-traceable transfer standards. It is advantageous to have a primary device or transfer standard connected in parallel with the primary device so that at any time during the test all parties may be satisfied that the gage readings or the recorded measurements are in agreement with the primary device (Fig. 4B.12 and para. 4B.13). This is especially important if the test instruments must be shipped or exposed to potentially harsh environments between the test site and an off-site calibration facility.

4B.13 Pressure Measurement With Running Calibration

Figure 4B.12 shows a precision spring pressure gage or a precision transducer connected in parallel with a deadweight gage (primary device) to the penstock through an interface vessel, so that at any time before, during or after the test, all parties may be satisfied that the gage readings or recorded measurements are in agreement with the primary device. The interface vessel permits operation of the deadweight gage with the required oil and provides for operation of the gage or the transducer with oil at the same temperature.

The two modes of operation, (1) pressure measurement with the gage or the transducer and (2) calibration of the instruments with the deadweight gage, are obtained by switching valves. For pressure measurement, valves A and C are open; valves B, D, and E are closed. For instrument calibration, valves A, C, and D are closed and E is open; valve B and sight glass are only used for checking the point of zero gage pressure. Valve D can be used to either release trapped air from the interface vessel or to fill the vessel and pressure line with oil. Valve B is used to relieve pressure in the vessel or adjust the interface level to the reference elevation.

An in-line calibration check does not need to include the point of zero gage pressure, nor does it need to cover the full instrument range. It must however, include a pressure p_L just below the expected test pressure(s) and a pressure p_H, just above the expected test pressure(s). When used for pre-test or post-test calibration, at least five calibration points shall be included. The applied weights and respective gage readings or transducer outputs are recorded, but the gage/transducer is not adjusted.

The instrument calibration is determined by a best-fit straight line fit to the calibration data. All calibrations and calibration checks should be evaluated and plotted as they are acquired. Should the difference between calibrations or calibration checks performed during the test program exceed acceptable limits, the causes of such

Copyright ASME International
Provided by IHS under license with ASME
No reproduction or networking permitted without license from IHS
Not for Resale

difference shall be determined and eliminated, and the calibration procedure repeated.

4B.14 Determination of Gravity

When using a deadweight tester, or a pressure transducer, the determination of gravity should be made at the elevation of the tester's piston. If a mercury column is used, the mid-height of the column should be the elevation used to determine gravity.

4B.15 Determination of Density of Water

In freshwater situations, the density of water may be determined by static water level measurement or by use of standard tables of pure water density, such as those given in Table 2.4D, and taking into account or making corrections for the following: (1) local gravity at the latitude at the test site and the elevation of the mid-height of water column, (2) average temperature of the water column, (3) compressibility at the mid-height of the water column, and (4) dissolved and suspended solids. Water temperature must be periodically recorded during the test.

When the test water is heavily silt-laden or brackish, the density of the water shall be determined by measurement. Pressure measurement devices shall be used at the test site under static conditions to determine the conversion factor from units of measurement indicated by the device, to the value of the density of water. In determining the water density, the buoyancy effect of air must be considered. Since instrument problems and survey errors can influence this measurement, it is advisable to confirm this value by computation.

4C FLOW MEASUREMENT

4C.1

The choice of a method for measurement of flow rate is a decision, which should be made early in the design stage of the project. Choice of the method for measuring large flow rates involves consideration of the conditions required for using each method, relative accuracy of test results of those methods that can be used, and relative costs when the accuracy of results of two methods are equal. Each method has its own requirements.

4C.2

Any leakage or diversion of water occurring between the measurement section and the machine shall be measured and suitably taken into account.

4C.3

This Code describes the current meter, pressure-time, ultrasonic, venturi meter, dye dilution, volumetric methods of flow measurement, and addresses the thermodynamic method of measuring efficiency. These methods are included because they meet the criteria of the Test Code Committee for soundness of principle, limits of accuracy available and demonstrated application under laboratory and field conditions. In addition, it is expected that these methods permit the selection of at least one method of flow measurement suited to field conditions encountered in testing.

4C.4

The classical methods of salt velocity and pitot devices have not been included in this Code. These methods are still considered valid methods of measuring flow rate but are no longer considered economically feasible. Should a situation dictate the need to use one of these methods, the user should refer to PTC 18-1992.

4C.5

The current meter method (paras. 4C.13 to 4C.25) measures velocities at several specified locations in a test section. This method of measuring flow rate is, for the purpose of this Code, restricted to closed conduits. It requires a suitable test section with appropriate approach conditions, and equipment to orient and hold the meters in the test section.

4C.6

The pressure-time method (paras. 4C.26 to 4C.59) measures the impulse resulting from the deceleration of flow. This method requires a closed conduit of suitable length with two piezometer sections, gates or valves that provide a nearly uniform rate of flow reduction, and apparatus to record the relation between pressure and time as the flow is decelerated. Numerous turbine mode tests have been successfully performed using this method but few successful pump mode tests have been done. For this reason, the method is not recommended for pumping mode tests.

4C.7

The ultrasonic method (paras. 4C.60 to 4C.80) is based on the principle that ultrasonic pulse transit times along chordal paths are altered by the fluid velocity. Transit times of pulses propagated downstream are reduced by fluid velocity, while transit times of pulses propagated upstream are increased.

4C.8

The venturi meter method (paras. 4C.81 to 4C.87) measures the difference between the pressure head at the inlet and at the throat section of the Venturi to determine the flow rate. This method is suited to installations having a closed conduit of sufficient length. Only venturis with calibrated discharge coefficients are considered capable of meeting the Code maximum flow rate uncertainty requirement.

Copyright ASME International
Provided by IHS under license with ASME
No reproduction or networking permitted without license from IHS
Not for Resale

4C.9

The dye dilution method (paras. 4C.88 to 4C.101) involves the constant rate injection of a dye tracer into the flow stream to be measured, and drawing off samples downstream at a distance where mixing is complete. The samples are analyzed for concentration and to ensure that the dilution of the dye is proportional to the flow. The method is suitable for once-through systems, where no recirculation takes place. The method is applicable to hydraulic turbines and pump-turbines operating in either the pumping or generating mode. An environmental permit may be required depending on downstream usage of the flow stream.

Advantages of the method are that: it can easily be adapted to existing facilities to inject and sample the dye without interrupting the flow, no measurements are required of the conduit, no dewatering of the conduit is usually necessary to install the injection system unless the conduit is extremely large, straight sections of conduit are not required, duration of test runs are relatively short, and a large range of flow rates can be measured with the same equipment.

Essential requirements of the method are that the injection rate is constant and known accurately, mixing is complete at the point of sampling, and there is no change of the dye strength other than caused by dilution by the flow being measured.

4C.10

The volumetric method (paras. 4C.102 to 4C.114) determines the average flow rate for a change in reservoir fluid elevation over a time period. The method requires a survey of the reservoir to determine an accurate relationship of reservoir volume change for the corresponding fluid elevation change.

4C.11

The **thermodynamic method** for efficiency determination is based on the water temperature difference measured across the machine. This temperature difference is converted to losses and consequently to efficiency. The flow rate is then computed from this and other measured variables. The thermodynamic method is specifically suitable for machines with heads in excess of 100 m. Due to the limited use and experience with this method in North America, details of this method are not included in this Code. If the thermodynamic method is desirable either as the primary or secondary method it is the recommendation of this Code to refer to the current version of IEC Standard 60041 "Field acceptance tests to determine the hydraulic performance of hydraulic turbines, storage pumps, and pump-turbines," Chapter 14 "Thermodynamic method for measuring efficiency".

4C.12

Any of the preceding methods of measuring flow rate may be used by mutual consent of the Parties to the Test, provided the guiding principles stated in Section 3 of this Code are observed. The method of measurement should be determined prior to construction so that the test appurtenances can be installed during construction.

4C.13 Current Meter Method

4C.14

The current meter method establishes the flow rate in a conduit by measuring the flow velocity at discrete points (point velocities) in the flow section area. The measured point velocities are integrated over a measurement cross section to obtain the mean velocity from which the flow rate is determined. The method presented here considers only flow measurement sections in closed conduits, full of water. For placing of measuring points, the log-linear method, which requires a fully developed turbulent flow profile, or integration of velocity area methods[1] of placement of measuring points are recommended. The methods of Gauss and Chebyshev[2] may also be used. The flow section area shall be determined within an accuracy of 0.2%.

4C.15

With respect to measurements in closed conduits, both circular and rectangular, the following points shall be observed for the measurement section:

(a) For the profile dependent log-linear method, the measurement section shall be straight and at least 20 conduit diameters for circular conduits or 80 hydraulic radii for rectangular conduits downstream, and at least 5 conduit diameters for circular conduits or 20 hydraulic radii for rectangular conduits upstream from the nearest bend, change in section, or other obstruction to the flow.

(b) The velocity distribution shall, as nearly as possible, be that of fully developed turbulent flow in a straight conduit of uniform section.

(c) The mean velocity shall not be less than 75% of the maximum velocity.

(d) If flow conditioners are required, they should be placed upstream at least 10 conduit diameters for circular conduits or 40 hydraulic radii for rectangular conduits.

(e) If the conduit is of lapped construction, the measurement plane should be in the smaller section.

(f) If the measurement section does not meet the requirements of (a) and is a location where oblique or reverse flows could exist, it is necessary to investigate for them using a flow directional sensing device such as directional vane with an angular transducer. All velocity

[1] Measurement of clear water flow in closed conduits – velocity area method using current meters, ISO 3354.

[2] Fluid Meters, Sixth Edition, 1971, ASME, pp. 107-110.

Copyright ASME International
Provided by IHS under license with ASME
No reproduction or networking permitted without license from IHS
Not for Resale

Table 4C.16 Locations of Measurement Points Using Log-Linear Method

Number of Measuring Points per Radius	$\frac{r_i}{R}$	$\frac{y_i}{2R}$	$\left(\frac{2R}{d}\right)$ min
3	0.358 6 ± 0.010 0	0.320 7 ± 0.005 0	
	0.730 2 ± 0.010 0	0.134 9 ± 0.005 0	23.4
	0.935 8 ± 0.003 2	0.032 1 ± 0.001 6	
5	0.277 6 ± 0.010 0	0.361 0 ± 0.006 0	
	0.565 8 ± 0.010 0	0.217 1 ± 0.005 0	39.7
	0.695 0 ± 0.010 0	0.152 5 ± 0.005 0	
	0.847 0 ± 0.007 6	0.076 5 ± 0.003 8	
	0.962 2 ± 0.001 8	0.018 9 ± 0.000 9	

where:
R = radius of measurement section
r_i = radius to measurement point i
y_i = distance from wall to measurement point i
d = propeller diameter

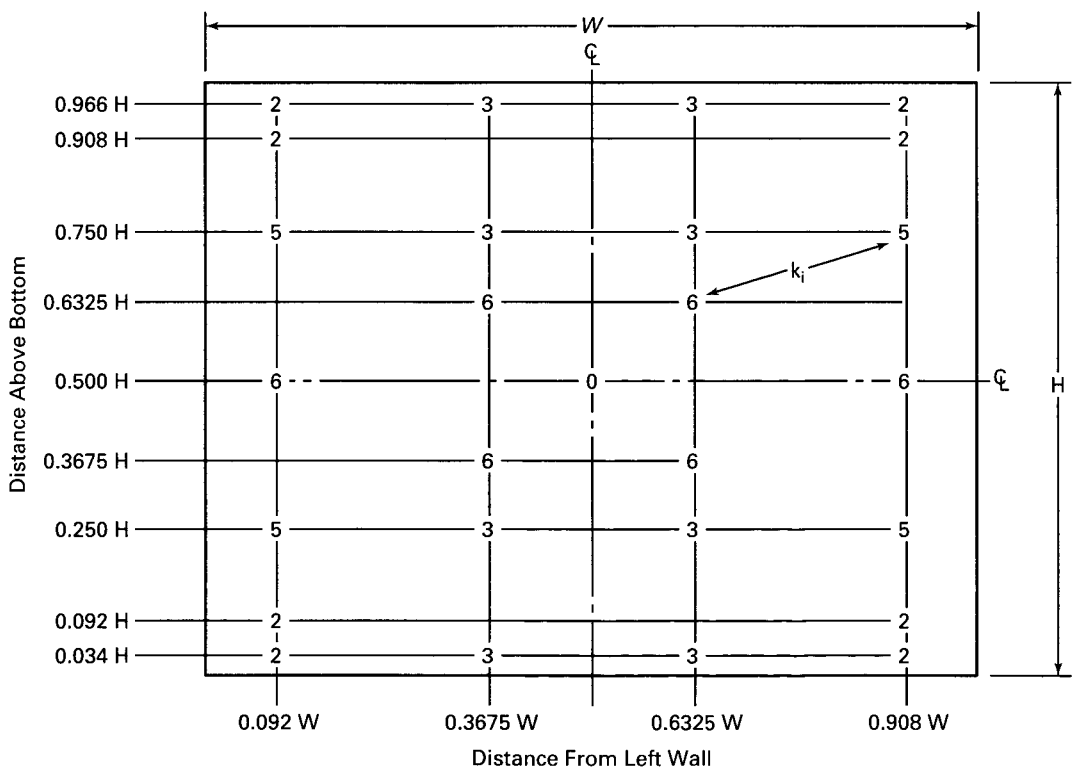

GENERAL NOTE: Numbers are weighting factors (k_i) which apply at the locations of the meters. The center meter is for reference only.

Fig. 4C.17 Location of Point Velocity Measurements with Weighting Factors K_i for the Log-Linear Method in a Rectangular Measurement Section

Copyright ASME International
Provided by IHS under license with ASME
No reproduction or networking permitted without license from IHS
Not for Resale

points must be included in the overall velocity calculation with the appropriate contribution. However, points exceeding the current meter's maximum oblique angular capability will increase the estimate of the overall velocity uncertainty. Measurement in this section would only be acceptable using a technique not dependent on an assumed velocity profile.

(*g*) Trashracks, trashrack support structures, and accumulated trash will affect the velocity distribution and turbulence levels. Consequently, the effects of these disturbances on the measurement section must be evaluated. The trashracks must be cleaned prior to testing.

4C.16 Circular Conduits

Velocities in circular conduits shall be measured along a minimum of two mutually perpendicular diameters. Table 4C.16 specifies the locations of the measurement points for the log-linear method. The minimum number of measurement points permitted by this Code is five points per radius, except that three current meters per radius may be used in conduits too small to permit five current meters. The mean velocity is $V_m = \Sigma V_i/n$ where V_i is the individual velocity and n is the number of measuring points.

4C.17 Rectangular Conduits

Figure 4C.17 shows an arrangement of 26 measurement points in a rectangular section, the minimum permitted by this Code. Their location in the measurement section is for the log-linear method. Unlike the arrangement given in para. 4C.16 and Table 4C.16, these velocity measurements shall be weighted according to the values k_i given in Fig. 4C.17. The mean velocity for the arrangement shown in Fig. 4C.17 is

$$V_m = \frac{\sum k_i V_i}{\sum k_i} = \sum \frac{k_i V_i}{96}$$

The measured flow rate is

$$Q_{measured} = V_m A$$

where A is the gross area of the measurement section. $Q_{measured}$ shall be corrected for the blockage caused by the current meters and their supports, as described in para. 4C.23. If the conduit is divided into several sections, the flow rate shall be computed from simultaneous measurements in each section.

Simultaneous measurements with several current meters mounted on movable frames, which can be repositioned at fixed locations between readings, can advantageously reduce the duration of the run.

When all velocity measurements are not made simultaneously, it is useful to check for steadiness of flow during the sampling period using a reference velocity measured at the center of the measurement section. This reference velocity is not included in the computation of the mean velocity or the flow rate. However, for small variations in flow rate the reference velocity can be used to adjust all velocity measurements to the same reference flow rate.

4C.18

Only axial-flow electric-signaling current meters shall be used. The bearing arrangement and lubrication are of special importance, as water borne solids should not enter the bearing, and corrosion or water hardness should not cause deterioration of the calibration. The effect of changes in water temperature shall be determined by calibration. It is recommended that meters be capable of detecting reverse flow.

4C.19

All current meters shall be homologous, with blade tip diameter not less than 100 mm (4 in.), except for meters adjacent to the conduit wall where tip diameters as small as 50 mm (2 in.) may be used.

4C.20

All current meters shall be mounted with their axes parallel to the conduit axis. The mounting rods and meter attachments shall be stiff enough so that deflection and vibration caused by the flow are negligible. The minimum distance between the axis of any current meter and the conduit wall or the blade tip of any adjacent current meter shall be 0.75 times the blade tip diameter of the current meter.

The minimum permissible conduit dimensions for current meter measurement are dictated by the minimum number of meters permitted and the minimum tip diameter allowed near the conduit wall. For circular conduits with 5 current meters per radius located as shown in Table 4C.17, the minimum permissible internal conduit diameter will be 2.1 m (6.5 ft) if 50 mm (2 in.) tip diameter current meters are near the wall. For rectangular conduits with 26 current meters spaced as shown in Fig. 4C.17, the minimum permissible height will be 1.1 m (3.6 ft), and the minimum permissible width 0.4 m (1.3 ft) if 50 mm (2 in.) tip diameter current meters are near all four walls.

4C.21

The duration of measurement for each run shall be at least 2 min. Should the water velocity be subject to periodic pulsations, the duration of measurement shall include an even number (at least four) of complete periods of the pulsation.

4C.22

The time measurement shall be accurate to at least 0.05%.

Copyright ASME International
Provided by IHS under license with ASME
No reproduction or networking permitted without license from IHS
Not for Resale

4C.23

The current meters and their supports disturb the velocity distribution in the conduit. This leads to a positive error in the flow rate measurement. The magnitude of this error depends on the number and type of current meters being used and the projected frontal area of the supports.

The flow rate Q, corrected for blockage, is given by:

$$Q = [1 - 0.125\ (S/A) - 0.03\ (S_m/A)]\ Q_{measured}$$

where

S = frontal area of the support structure

S_m = propeller area,

$$\left(\sum^{n}_{i=1} \pi d_i^2/4\right)$$

d_i = tip diameter of the propeller

A = area of the measurement section

n = number of current meters

The summation of area is for all current meters whether of the same or different tip diameters. An uncertainty of $\pm(1/12)(S/A)$ is introduced into the flow measurement by the supports. This may limit the amount of blockage that can be tolerated.

4C.24

The current meters shall be calibrated in a towing tank with the same type of mounting as will be used during the test. Where meters are closely spaced, the calibration shall include the effects of adjacent meters. The calibration shall include oblique flow up to 10 deg. In no case may the calibrated rating curve be extrapolated.

4C.25

The current meters shall be inspected before and after the test. Any blade deformation or other defect subsequent to calibration shall require a recalibration of the meter at the request of any party to the test.

4C.25.1 The uncertainty in flow measurement using the Current Meter Method within the specifications of this Code is estimated to be within ±1.2% for conduits ranging in diameter from 1.2 m to 1.5 m (4 ft to 5 ft) and within ±1% for conduits larger than 1.5 m (5 ft) in diameter.

4C.26 Pressure-Time Method

4C.27

This method for measuring the flow rate is applicable where the water flows through a closed conduit of either uniform or converging cross section. It is based upon the relation between change of pressure and change of velocity of a volume of water expressed in terms of the pressure waves propagated during the change. The differential diagram application of the pressure-time method shall be used. Differential diagrams record the pressure variations between two measurement sections with no intermediate free surface points of relief and are affected only by the friction loss and change in momentum between two such sections. The effect of conduit friction loss outside of the differential test section, changes in intake or conduit friction, and changes in intake or surge-tank water levels are identical at both pressure measurement sections, and thus are eliminated from the differential pressure readings.

4C.28

The minimal condition for the use of this method is that the product of L and v shall not be less than 46.5, where L is the length between the two pressure measurement sections in meters and v is the mean velocity in the test section in m/s when the machine is carrying full load. (The corresponding value in the U.S. Customary system is 500, where L is in feet and v is in ft/s.) Values of L shall exceed the larger of 10 m (33 ft) or twice the internal diameter of the conduit. Intakes with multiple passageways require that simultaneous independent pressure-time diagrams be taken in each passageway of the intake.

4C.29

The leakage past the wicket gates or other closing device used in producing the pressure rise should be measured separately when the wicket gates or the closing device are in the closed position under the actual test head. If this is not possible, the leakage measured when the unit is at standstill shall be adjusted to the pressure drop across the wicket gates or closing device measured at the end of each pressure-time run. Such leakage, when adjusted to test conditions, shall not be greater than 2% of full load flow rate and the leakage measurement error shall not exceed 0.1% of full load flow rate.

4C.30

The areas of each of the two pressure measurement sections and the distance between them shall be measured with sufficient precision to determine the pipe factor F = L/A within 0.1%. Construction drawing dimensions shall be used only as a check on these measurements, not for the area calculation.

4C.31

Four pressure taps, 3 mm to 9 mm (1/8 in. to 3/8 in.) diameter, shall be installed at each measurement section in positions diametrically opposed and in a plane normal to the axis of the section. The four taps of each measurement section shall be valved individually and

Copyright ASME International
Provided by IHS under license with ASME
No reproduction or networking permitted without license from IHS
Not for Resale

connected by rigid piping or tubing to a separate manifold for each measurement section. The two manifolds shall be accessible for connection to the differential pressure manometer of the pressure-time apparatus.

4C.32

In circular conduits, the pressure taps at each measurement section shall be located at 45 deg to the centerline of the section. In rectangular conduits, the pressure taps shall be located at one-quarter and three-quarter heights on the vertical walls. Pressure taps and connecting piping, except for this particular requirement, shall conform to requirements of para. 4B.11.

4C.33

To ensure the necessary accuracy in the recorded pressure-time diagrams, flow conditions in the conduit shall be such that, at each measurement section, the difference between the pressure measured at any one tap and the pressure measured at all taps in the same measurement section shall not exceed $0.2\ v^2/2g$. The average of the readings from any pair of opposite taps shall not differ from the average of the other pair of taps in the same measurement section by more than $0.1\ v^2/2g$. This will require consideration of such items as velocity distribution, length of straight run of conduit, and wall conditions at the individual taps. Compliance with the velocity head criteria shall be required at three representative gate settings within the specified range and should also be checked at flow extremes to estimate flow measurement accuracy outside this range.

Pressure readings shall be checked prior to beginning the test. If any pressure tap appears to be in error, the source of the error shall be determined and removed. If this is not possible, the non-conforming tap and its opposite shall be eliminated from the flow measurement. Not less than one pair of opposite taps shall be used at each measurement section. Spot checks of the velocity head criteria shall be made immediately following the test to confirm compliance with the required criteria.

4C.34

The flow rate, which is to be measured in the conduit, shall be set by limiting the movement of wicket gates or other closing device in the opening direction at the desired position, preferably by means of mechanical blocks, without restricting the closing function for emergencies.

4C.35

While the generator remains connected to the system, a pressure-time diagram (see Fig. 4C.35) shall be obtained by closing the wicket gates or other closing device in one continuous movement, graphically recording the resultant change in pressure on the chart of a recording device. Acceptable recording devices include the traditional Gibson apparatus and the digital pressure-time system. Other measurements necessary for each test run include fluid temperatures and the time of wicket gate closure.

4C.36 Pressure-Time Method Using the Gibson Apparatus

4C.37

The Gibson apparatus (see Fig. 4C.37) photographs on a sensitized film moving at a uniform rate, the movement of the top surface of a column of mercury in a U-tube manometer. The manometer is connected to the flow conduit (see para. 4C.32). This mercury column movement is caused by a pressure change in the conduit. Because the diagram is produced by means of an exposure through a narrow slot in the film holder, the width of slot will cause the diagram to be slightly larger than it would be drawn by a point or by exposure through a slot of infinitesimal width. The operator must be prepared to perform an on-site check of the pendulum swing time and width of slot as displayed photographically on film similar to that used for the test.

4C.38

To reduce the effects of friction, all connecting piping shall be at least 19 mm (¾ in.) diameter.

4C.39

The procedure for delineating and measuring the diagram of Fig. 4C.35 is as follows: A horizontal line AA, called the running line, is drawn coincident with the position on the diagram representing the level of the top surface of the mercury in the manometer of the apparatus under running conditions before the wicket gates began to close. If the running position of the mercury is wavy, the running line AA shall be taken as the mean position of its peaks and valleys.

4C.40

A horizontal line FF, called the static line (see Fig. 4C.35) is drawn coincident with the position on the diagram representing the top surface of the mercury in the manometer of the apparatus under static conditions after the wicket gates have been closed. Usually this line is coincident with the median line of the afterwaves following complete closure. The median line is obtained by bisecting the envelope curves shown at HH and GG.

The vertical line KM marking the end of the diagram is located as follows.

(a) Measure the horizontal distance along the static line FF from its intersection at U with the rising edge of the first uniformly decaying harmonic wave after complete closure, to its intersection at N with the falling edge of the same afterwave.

Copyright ASME International
Provided by IHS under license with ASME
No reproduction or networking permitted without license from IHS
Not for Resale

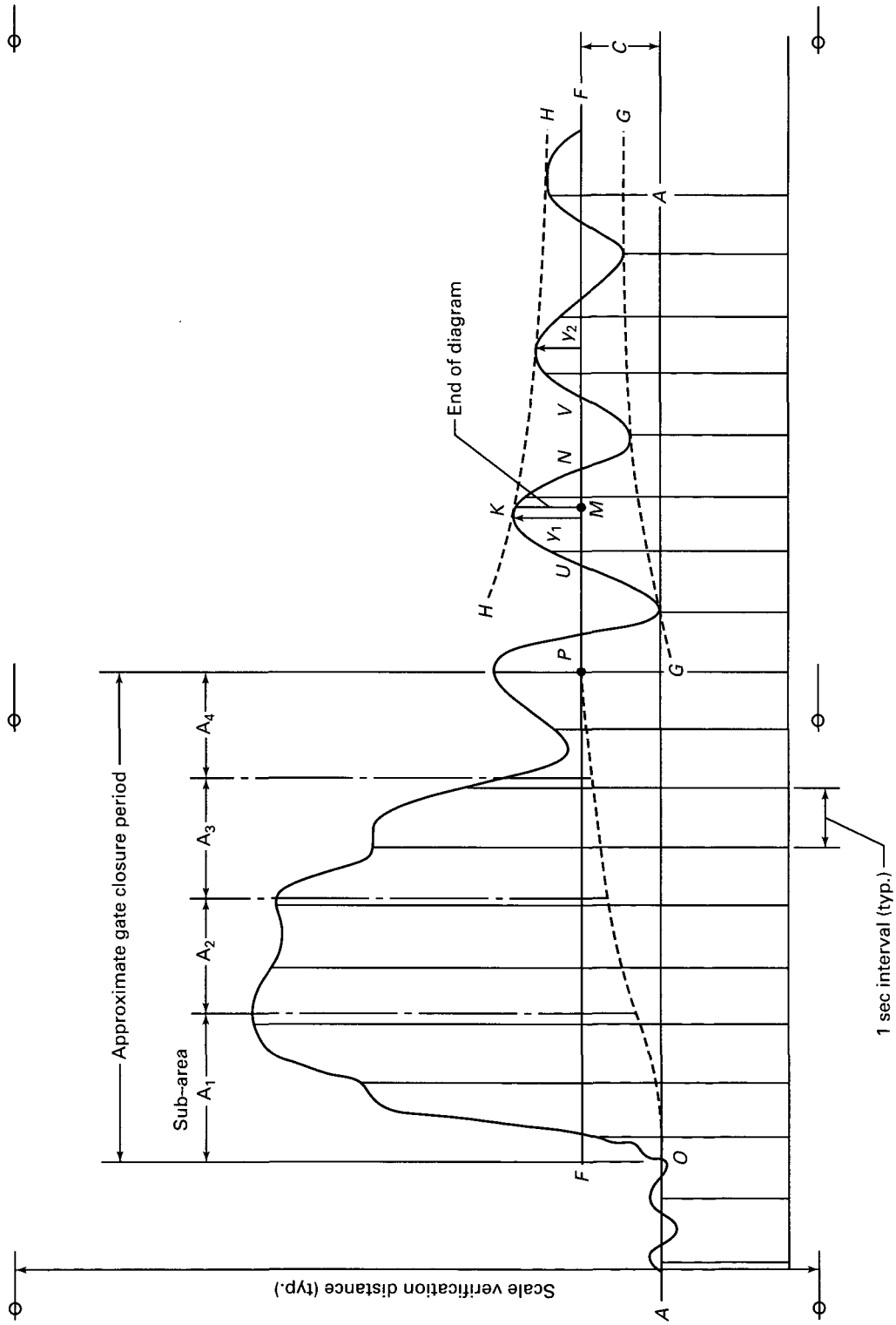

Fig. 4C.35 Typical Pressure-Time Diagram

Copyright ASME International
Provided by IHS under license with ASME
No reproduction or networking permitted without license from IHS
Not for Resale

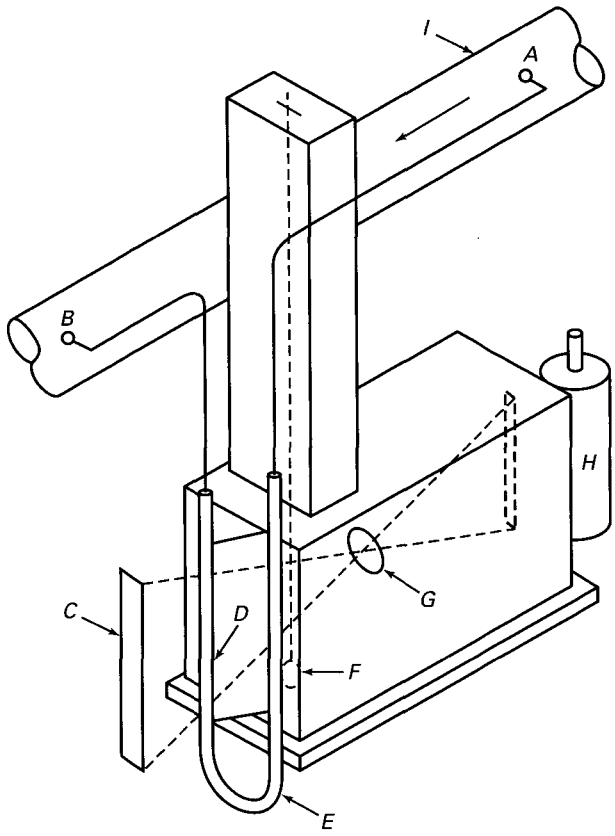

A = upstream pressure measurement section
B = downstream pressure measurement section
C = light source
D = glass tube leg of manometer
E = stainless steel leg of manometer
F = seconds pendulum
G = photographic lens
H = photographic film on revolving drum
I = conduit

Fig. 4C.37 Arrangement of Pressure-Time Apparatus

(b) Subtract the slot width (see para. 4C.37) from the value obtained in (a) above.

(c) Measure the heights y_1 and y_2 above the static line FF of the peaks of two adjacent afterwaves and compute the wave height ratio $W = y_1/y_2$.

(d) Determine the quantity Z from Fig. 4C.40 and multiply this quantity by the dimension obtained in (b) above to obtain the length UM. This length is scaled along the static line FF from the point U where FF intersects the rising edge of the first afterwave, following closure, to a point M. Draw a vertical line MK. This line determines the end of the diagram. The area of the diagram shall be at least 10 000 mm^2 (15 $in.^2$) for the rated full load conditions.

4C.41

The diagram is divided into a number of approximately equal sub-areas a_1, a_2, etc. A trial recovery line OP is drawn as shown by the dashed line on Fig. 4C.35. Each of the sub-areas a_1, a_2, etc., above OP is then measured by a precision-type planimeter rated to have an accuracy of 1:4000. Deduct the slot area from the sum of the sub-areas. The slot area is determined by summing the vertical rise and fall for all peaks within the particular sub-area and multiplying the result by one-half the slot width.

4C.42

Figure 4C.42 is a tabular form, which has been designed so that the successive steps to be taken in measuring a diagram may be followed in a systematic manner.

The data entered at the top of the form for identification and convenient references are self-explanatory.

The columns of the table show, respectively:

(a) Column 1–Designating letter of the sub-areas a_1, a_2, etc.

(b) Column 2–Summation of the vertical rise and fall of each sub-area is multiplied by one-half of the effective slot width to obtain the slot correction (paras. 4C.37 and 4C.41).

(c) Column 3–Planimeter readings for each sub-area

(d) Column 4–Difference between planimeter readings

(e) Column 5–Value of each sub-area of the diagram less the slot correction is the net area.

(f) Column 6–The summation values are obtained by adding successively the net areas in Column 5. When the last of the sub-areas has been added, the total will approximate the net area of the diagram above the assumed recovery line. The final recovery line is located by following the instructions in para. 4C.43, and after the final recovery line has been located, the final total area of the diagram is then measured.

(g) Column 7–Recovery line (see para. 4C.43)

(h) Column 8–Time constant for each sub-area

(i) Column 9–Weighted timing product

4C.43 That part of the gross area of the diagram produced by the recovery of friction and velocity head differentials shall be eliminated on the basis that friction and velocity head differentials remaining are equal to $c(1 - r)^x$ where:

c = sum of the friction head and the difference in velocity heads between pressure measurement sections recorded on the pressure-time diagram, Fig. 4C.35

x = slope of "c-versus-Q" curve plotted on logarithmic graph paper

Copyright ASME International
Provided by IHS under license with ASME
No reproduction or networking permitted without license from IHS
Not for Resale

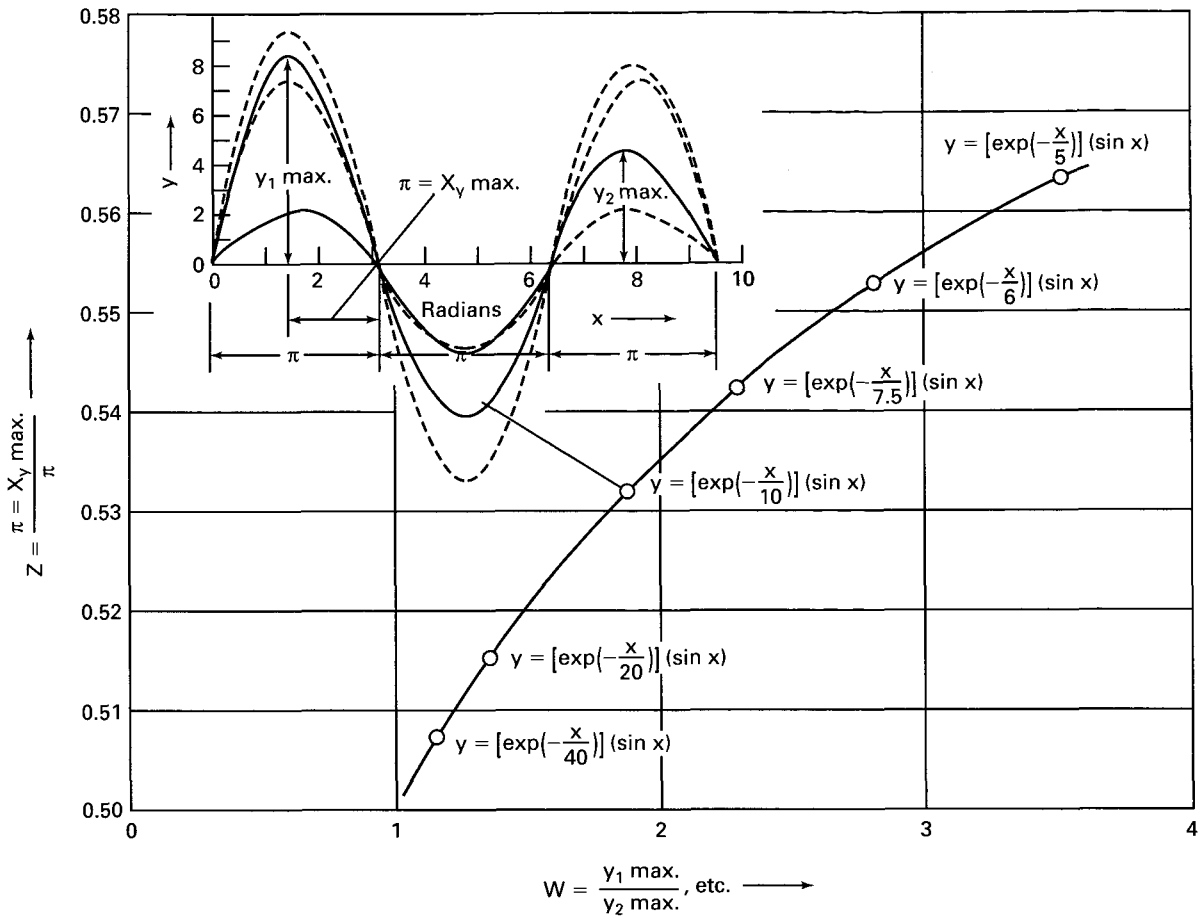

GENERAL NOTE: $[\exp(-x)](\sin x) = e^{-x} \sin x$

Fig. 4C.40 Damped Harmonic Waves

$$r = \frac{a_N}{a_T + a_L}$$

where

a_N = net area of the diagram measured up to a given sub-area n

$$a_N = (a_1 + a_2 + a_3 \ldots a_n)$$

a_T = total net area of the diagram for all the sub-areas

$$a_T = (a_1 + a_2 + a_3 \ldots a_t)$$

a_L = area of the diagram corresponding to leakage flow

$$a_L = \frac{qFS}{K}$$

q = leakage flow past the machine wicket gates used to create the pressure rise, m^3/s (ft^3/s)

L = total distance, m (ft), between the two pressure measurement sections, measured along the centerline of the conduit ($L = \Sigma L_i$)

A = area of conduit, at the measurement section, m^2 (ft^2)

F = constant of conduit called the pipe factor (F = L/A). If the conduit is of non-uniform cross section, then

$$F = \Sigma (L_i/A_i)$$

L_i = distance, m (ft), between each intermediate conduit section within the total measurement section.

A_i = area, m^2 (ft^2), at each intermediate conduit section within the total measurement section

S = time constant of diagram. It is the horizontal length in mm (in.) corresponding to one second of time (see Fig. 4C.35).

K = calibration constant of the recording apparatus = g/y

Copyright ASME International
Provided by IHS under license with ASME
No reproduction or networking permitted without license from IHS
Not for Resale

Operating Company _____

Plant _____ Date _____ Unit No. _____ Run No. _____

K/F _____ S _____ c _____

RECOVERY LINE COMPUTATION

1	2	3	4	5	6	7	8	9
				Δa NET AREA			Weighted Timing	
No.	Slot Correction	Planimeter Readings	DIFF.	Corrected For Slot	a_N	$c(1 - r)^x$	ΔS	ΔS (Δa)
a_1								
a_2								
a_3								
a_4								
a_5								
a_6								
a_7								
a_8								
a_9								
a_{10}								

TOTAL FLOW RATE COMPUTATION

Total area =

Correction for slot =
Final net area a_f =
Ka_f/FS =
Leakage q = _____
Total flow rate Q =

Fig. 4C.42 Sample of a Data and Computation Sheet of a Flow Rate Measurement by the Pressure-Time Method

y = vertical height on the diagram corresponding to 1 m (1 ft) of head change in the conduit, mm (in.)

4C.44

When c is equal to or less than 6 mm (¼ in.) on the diagram at maximum flow rate, the exponent x may be assumed to be 2.0. When c is greater than 6 mm (¼ in.) at maximum flow rate, the exponent x shall be determined by successive measurements of diagrams based on assumed values of x and corresponding logarithmic plottings of c and Q. The exponent shall be accepted when the assumed value and slope of "c-vs-Q" curve are in substantial agreement. An initial trial value of $x = 1.85$ is recommended. When the value of c is small, the recovery line can frequently be located with sufficient precision by eye, and the process of subdividing the area of the diagram into sub-areas can be omitted or at least limited by checking of a few diagrams.

Negative values of c are sometimes encountered and must be dealt with on an individual basis. Negative c values may result from secondary flows set up by small pressure differences in the piezometer manifolds or from

Copyright ASME International
Provided by IHS under license with ASME
No reproduction or networking permitted without license from IHS
Not for Resale

erratic pressure fluctuations prior to load rejection. Sufficient pressure fluctuations, representing the running condition, should be photographed prior to load rejection to assure accurate running line AA delineation. Trial runs should be made using different combinations of piezometer taps in an attempt to identify and eliminate the negative c phenomena. If the negative c values cannot be eliminated, or evaluated to the satisfaction of the Parties to the Test, the affected runs shall be rejected.

4C.45

The flow rate shall be computed by the equation

$$Q = \frac{Ka_f}{FS} + q$$

where

Q = flow rate, m^3/s (ft^3/s)

a_f = final net area, mm^2 ($in.^2$), of the diagram (Fig. 4C.35) after the recovery line has been established, and corrections have been made for width of slot and shrinkage or stretching of the print of the diagram (see para 4C.41).

The area of the pressure-time diagram (Fig. 4C.35) is a measure of the quantity of water actually decelerated. Any water (leakage water), which remains flowing, shall be measured and adjusted to the head condition existing at the time of closure in the manner described in para. 4C.29. The leakage rate q shall be added to the flow rate measured from the diagram to obtain the total flow rate at the moment the wicket gates or other closing device began to close.

4C.46 Pressure-Time Method Using Digital Data Acquisition

4C.47

Differential pressure transducers may be used in conjunction with a digital data acquisition system to record the pressure-time signal. The general requirements for validity, including conduit dimensions, pressure taps, pressure-tap consistency, etc., apply to the digital method. This section describes requirements and features unique to the digital implementation of the pressure-time method.

The digital pressure-time method will normally record the pressure signal with higher frequency response than the traditional method, with the result that excessive pressure noise in the penstock may make it impossible to accurately integrate the pressure-time diagram. Because of this possibility, it is advantageous to perform a preliminary pressure-time measurement well in advance of the formal testing for the purpose of verifying that a suitable pressure signal can be obtained.

4C.48 Differential Pressure Transducer

The following requirements shall govern the selection and use of the differential pressure transducer used for pressure-time testing:

(a) The response time of the transducer shall be 0.2 seconds or faster.

(b) The full-scale volumetric displacement of the transducer shall be no more than 0.082 cm^3 (0.005 $in.^3$).

(c) The transducer shall have an uncertainty of no more than 0.25% of the expected peak signal, including the effects of hysteresis and linearity.

(d) The pressure-time transducer shall be calibrated prior to and after testing using a manometer or dead weight tester. It is recommended that this calibration be performed on-site, using the same wiring and data acquisition system as will be used during testing. Upon agreement of the Parties to the Test, a lab-certified transfer standard with an uncertainty of no more than 0.1% of the maximum expected signal may be used.

(e) Most differential pressure transducers will exhibit some change in calibration if the static or line pressure of the measurement is raised, even if the pressure differential across the transducer stays the same. If this static pressure effect on the transducer will lead to more than 0.2% uncertainty between calibration and test conditions, the transducer shall be calibrated at the average static pressure expected during the tests.

(f) If the effect of a change in ambient temperature between calibration and test conditions will lead to more than 0.2% uncertainty in the transducer calibration, the transducer shall be maintained at a temperature close enough to the calibration temperature to achieve an ambient temperature effect of less than 0.2% uncertainty.

(g) Calibration and span adjustment of the differential pressure transducer shall include allowance for negative pressure differentials that will be experienced during a pressure-time test.

(h) Any signal conditioning or pressure damping device used in the hydraulic circuit with the differential pressure detector must be applied with caution to ensure that the characteristics of the device do not alter the method. All signal conditioning, including hardware or software filtering or smoothing, shall be approved by all Parties to the Test.

(i) In the case of an undamped sensing element, the natural frequency of the transducer shall be at least 10 times greater than the maximum frequency expected in the pressure signal.

(j) No over-range or under-range of the transducer shall be present in the integrated portion of the pressure-time signal.

4C.49 Data Acquisition System

(a) The differential pressure signal shall be sampled at a rate of at least 100 samples per second.

(b) The data acquisition system shall have an uncertainty of no more than 0.1% of the maximum value of the acquired signal.

(c) The timing uncertainty of the samples shall be no more than 0.1% of the length of the main excursion

Copyright ASME International
Provided by IHS under license with ASME
No reproduction or networking permitted without license from IHS
Not for Resale

portion (integration interval) of the pressure-time record.

4C.50 Connecting Piping

(a) Connecting piping shall be as short as practical and be at least 6 mm (¼ in.) inside diameter.

(b) Connecting piping may be rigid or flexible, so long as the material and construction is non-elastic and non-expanding and it can be shown that the piping will convey the pressure signal without introducing damping in excess of that specified in para. 4C.48(a). For this purpose, the connecting piping shall be considered to be a part of the transducer. If necessary, piping should be supported to prevent resonant mechanical vibration.

4C.51 Manifold

(a) Connecting piping from each piezometer at a section should be manifolded together as close to the piezometer section as practical, using pressure sense lines of equal length.

(b) To ensure that there is no pressure bias due to flow in the pressure sense lines between pressure taps, either a triple-tee piping arrangement or a chamber-type manifold may be used to combine the pressure sense lines. If a chamber-type manifold is used, the cross-sectional area of the manifold should be at least 10 times the combined area of the sense lines from the piezometer taps. This will ensure no significant pressure bias due to flow within the manifold will exist.

4C.52 Acquisition of the Pressure-Time Signal

(a) Data acquisition must commence sufficiently in advance of the start of gate closure and continue sufficiently long after completion of gate closure to allow accurate delineation of the running and static lines. As a general rule, acquisition of the pressure-time signal should start at least 10 sec before the start of gate closure and should continue for at least 20 sec after gate closure. Preliminary tests should be performed to ensure that these intervals are adequate. These intervals should be re-evaluated as the testing progresses.

(b) Every differential pressure signal sample value shall be stored permanently in its raw form and made available to all Parties to the Test.

(c) The criteria to be used for discarding spurious test data shall be agreed to by the Parties to the Test. The digital system shall keep a record of all data rejected and the reason why they were rejected.

(d) It is recommended that the wicket gate position be recorded and displayed with the pressure-time signal.

4C.53 Delineation of the Pressure-Time Diagram

An example of a typical digital pressure-time signal is shown in Fig. 4C.53. Because the pressure-time signal from a digital implementation will generally be different in its details than one obtained using the Gibson apparatus, somewhat different methods are employed to delineate and integrate the pressure-time signal.

4C.54 Running Line Delineation

The starting point on the running line is chosen 10-30 sec before gate closure. The point chosen should have a pressure value close to the midpoint of the peaks in the running line interval (i.e., near the average).

The ending point on the running line should have a pressure value close to the midpoint of the peaks (i.e., near the average), and be close (within a pressure wave cycle or two) to the point at which the wicket gate position signal shows the start of wicket gate closure.

4C.55 Static Line Delineation

The starting and ending points on the static line should be chosen at a point in the trace after complete wicket gate closure in which no mean pressure oscillations are apparent. These points should have a pressure value close to the midpoint of the peaks in the static line interval (i.e., near the average). A static line length of 10–20 sec will generally be sufficient.

4C.56 Integration Interval Delineation

The starting point of the integration interval should be the same as the ending point of the running line interval. The ending point of the integration interval should be the same as the starting point of the static line interval.

4C.57 Integration of Digital Pressure-Time Signal

Paragraphs 4C.57 through 4C.59 describe the analytical background and implementation for determination of discharge by integration of a pressure-time signal obtained using digital data acquisition methods.

The discharge computation computer program shall be based on the principles of numerical integration described in paragraphs below.

The computer program with all relevant information shall be made available for review by the Parties to the Test.

The test report shall include a copy of the graphical presentation of the pressure-time signals showing the running, recovery and static lines, and the start and end points for the integration.

4C.58 Analytical Description of Numerical Integration

The fundamental pressure-time integral is given by

$$Q_i - Q_f = \frac{gA}{L}\int_{t_i}^{t_f}(h + l)dt \qquad (1)$$

where

Q_i = flow rate prior to wicket gate closure

Q_f = flow rate after completion of wicket gate closure

Copyright ASME International
Provided by IHS under license with ASME
No reproduction or networking permitted without license from IHS
Not for Resale

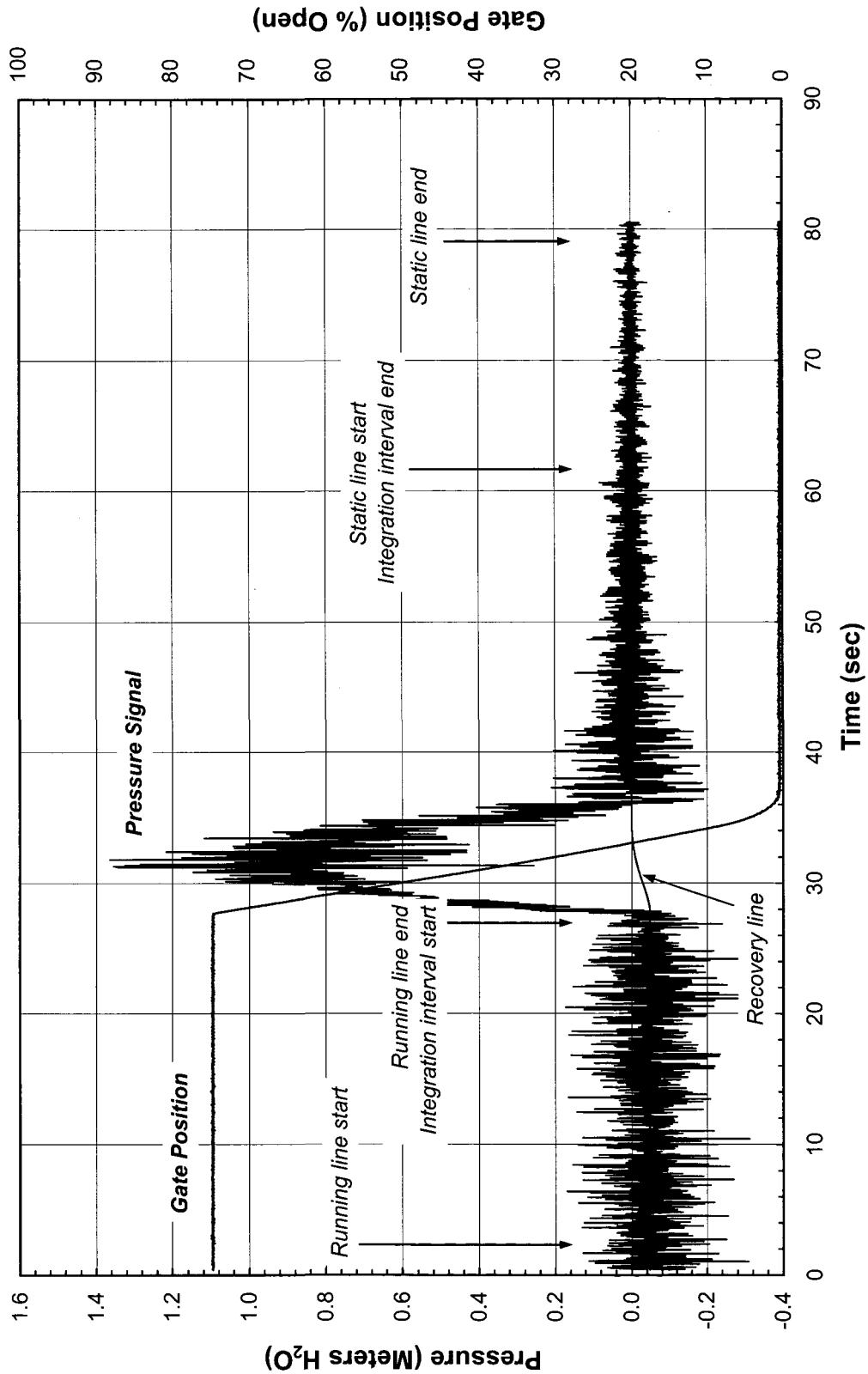

Fig. 4C.53 Example of Digital Pressure-Time Signal

Copyright ASME International
Provided by IHS under license with ASME
No reproduction or networking permitted without license from IHS
Not for Resale

g = local acceleration of gravity
A = average penstock area
L = distance between piezometer tap planes
h = pressure head difference between piezometer tap planes at local conditions
l = pressure loss between piezometer tap planes
t = time
t_i = beginning of integration interval
t_f = end of integration interval

Also, the following variables for this analysis are defined:

h_f = static (final) line average head at local conditions
h_i = running (initial) line average head at local conditions
ρ = density of water

The relationship between pressure and head (water column at local conditions) is given by:

$$\Delta p = \rho g h \tag{2}$$

Note that, in the above equation, h is measured in terms of local water column (i.e., in meters or feet of water at local temperature, pressure, and gravitational acceleration). An appropriate conversion to convert the pressure difference Δp to the desired pressure units may be required. If a water manometer is used for calibration, a correction for the difference in density due to temperature between the calibration water and the test water may be necessary.

The pressure recovery term l is assumed to follow a fully turbulent velocity-squared pressure law as follows:

$$l = f\frac{L}{D}\frac{Q^2}{2gA^2} = -\frac{h_i}{Q_i^2}Q^2$$

where

$$-\frac{h_i}{Q_i^2} = f\frac{L}{D2gA^2} = k = \text{constant} \tag{3}$$

By agreement of the Parties to the Test, a power of less than 2 on the flow term may be used in the pressure-recovery law, so long as appropriate adjustments are made to all subsequent equations in paras. 4C.58 and 4C.59.

If the pressure cell has an initial offset, it will not affect the integration of the pressure-time integral, so long as the offset does not change during the course of run. The value of the offset can be determined directly from the pressure-time record as described in the following.

Assume a constant instrument offset h_o exists, so that the relationship between the true pressure h and the measured pressure h_m is given by

$$h_m = h + h_o \tag{4}$$

Then the true pressure is given by

$$h = h_m - h_o \tag{5}$$

By the head loss equation (Eq. 3), the initial flow can be given by

$$Q_i^2 = -\frac{1}{k}h_i \tag{6}$$

Since k is taken to be constant, the following relationship also holds:

$$Q_f^2 = -\frac{1}{k}h_f \tag{7}$$

Substituting Eq. (3) in Eqs. (6) and (7), and solving for k and h_o yields

$$\frac{1}{k} = -\frac{Q_i^2 - Q_f^2}{h_{mi} - h_{mf}} \tag{8}$$

and

$$h_o = \frac{Q_i^2 h_{mf} - Q_f^2 h_{mi}}{Q_i^2 - Q_f^2} \tag{9}$$

where h_{mi} and h_{mf} are the initial and final values of the measured pressure differential h_m.

The factor h_o is termed the "offset compensation." It can be thought of as compensating for instrument offset, and ensures that the computed running and static lines are consistent with the assumed recovery loss law.

The final form of the pressure-time integral used in the analysis is given by

$$Q_i - Q_f = \frac{gA}{L}\int_{t_i}^{t_f}\left[(h_m - h_o) - \frac{h_{mi} - h_{mf}}{Q_i^2 - Q_f^2}Q^2\right]dt \tag{10}$$

4C.59 Numerical Integration of Pressure-Time Integral

The pressure-time integral given by Eq. (10) may be integrated using a trapezoidal or higher-order integration scheme. The equation solved is for the flow at a given time t as given below:

$$Q(t) = Q_i - \frac{gA}{L}\int_{t_i}^{t}\left[(h_m - h_o) - \frac{h_{mi} - h_{mf}}{Q_i^2 - Q_f^2}Q^2(t)\right]dt \tag{11}$$

Numerical evaluation of this integral proceeds as follows:

(a) An estimate for the value of the flow before gate closure Q_i is made.

(b) Using the assumed value for Q_i, the integral of Eq. (11) is evaluated for each time in the pressure-time data series, until $Q(t_f)$, the final flow value at $t = t_f$, is obtained.

(c) If $|Q(t_f) - Q_f| \le 0.001Q_i$, then convergence has been achieved, and the value of Q_i used in the integration is the flow rate obtained by the pressure-time integration. If convergence is not achieved, these steps are repeated.

Copyright ASME International
Provided by IHS under license with ASME
No reproduction or networking permitted without license from IHS
Not for Resale

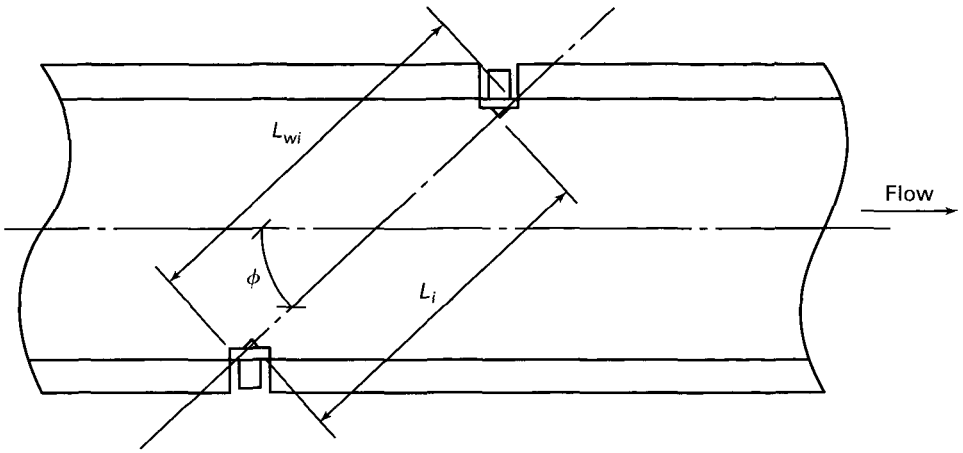

L_{wi} = distance across the conduit from wall to wall across chordal paths
L_i = distance in the fluid along chordal path between transducers
ϕ = angle between acoustic path and the direction of water flow

Fig. 4C.61 Ultrasonic Method – Diagram to Illustrate Principle

Because the integral involves the flow $Q(t)$ quadratically and on both sides of the equation, a quadratic solution for the flow $Q(t)$ at each time step is preferable. If a converging solution cannot be achieved using a quadratic solution, then the value of $Q(t)$ from the previous time step may be used in the pressure-recovery term in the pressure-time integral.

4C.59.1 The uncertainty in flow measurement using the Pressure-Time Method within the specifications of this Code is estimated to be within ±1.0%.

4C.60 Ultrasonic Method

4C.61

This method of flow rate measurement is based on the principle that the ultrasonic pulse transit times along chordal paths are altered by the fluid velocity. An ultrasonic pulse sent upstream travels at a slower speed than an ultrasonic pulse sent downstream (see Fig. 4C.61). By measuring separately the transit times of pulses sent in the two directions, the average velocity of the fluid crossing the path of the pulse is determined vectorially. Many time measurements are required to establish an average and to minimize the random error for each run. The fluid velocity is determined by suitable integration of the individual velocity measurements.

4C.62

The ultrasonic flow rate measurement equipment includes transducers (used alternately as transmitter or receiver) installed in the measurement section and electronic equipment to operate the transducers, make the measurements, process the data, and display or record the results. It should also include a verification program to insure that the equipment and program are functioning properly.

4C.63

Several methods of ultrasonic flow measurement exist but not all have demonstrated that they are capable of achieving the accuracy required for field performance tests. Methods acceptable to this Code are based on the measurement of the transit time of ultrasonic pulses in each of two crossed measurement planes, although in some cases one plane may be used (see Fig. 4C.63). Excluded from this Code are (1) devices based on the measurement of the refraction of an ultrasonic beam by fluid velocity, (2) devices which measure the Doppler frequency shift of an ultrasonic wave reflected by the flowing water or by moving particles. In this Code, the application of the ultrasonic method is limited to closed conduits of uniform cross section, either circular or rectangular.

4C.64

There are two acceptable methods of transit time measurement. The first measures the transit time in each direction between the two transducers. The second method measures additionally the transit time difference between upstream and downstream pulses.

4C.65

In order to reduce the systematic error due to effects of transverse flow, the use of measurement planes A and B is required, as shown on Fig. 4C.63 and explained in para. 4C.66. For ease of understanding, Fig. 4C.63 depicts the chordal paths in the section as being parallel to the ground. This is not a stipulation of the figure; in

Copyright ASME International
Provided by IHS under license with ASME
No reproduction or networking permitted without license from IHS
Not for Resale

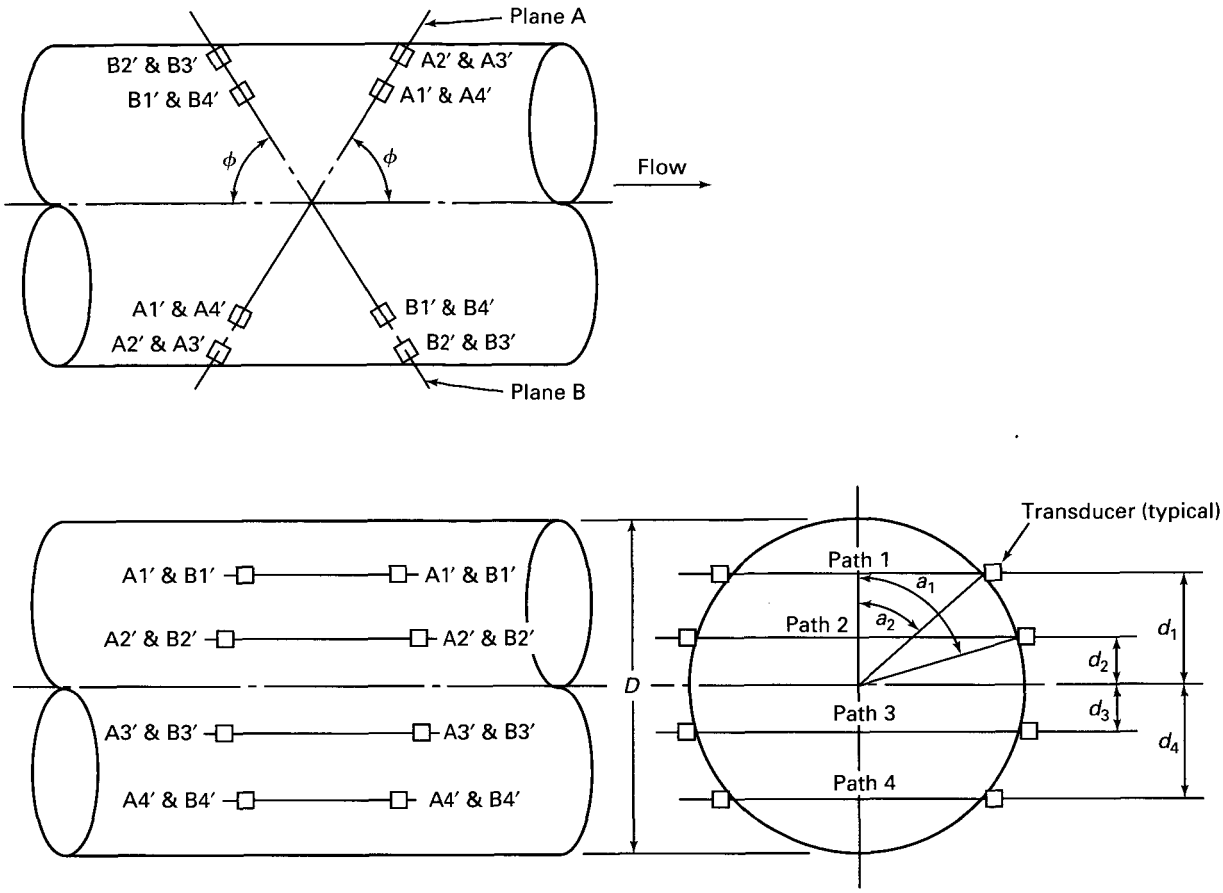

Fig. 4C.63 Ultrasonic Method – Typical Arrangement of Transducers in a Circular Conduit

reality, the chordal path can be at any angle as long as the relationship of the transducers in all three views is consistent with those shown here.

4C.66

In circular conduits, the application of ultrasonic methods using two planes with four chordal paths each has been demonstrated to measure the flow rate with an accuracy acceptable under this Code (see Fig. 4C.63). The arrangement and location of these chords shall permit the use of recognized numerical integration methods as shown in Table 4C.66.

4C.67

Similarly, the use of the above-described methods in conduits of rectangular cross sections is expected to provide flow rate measurements of acceptable accuracy provided the paths are located such that recognized numerical integration methods may be applied (see Fig. 4C.67). In Table 4C.66, values for the location of the paths for two recognized numerical integration methods are shown.

4C.68

A systematic error, depending upon the Reynolds number and the shape of the transducer mount (projecting or recessed), is introduced. Two known effects exist. The local distortion of the velocity profile along the chordal path, compared to that which would exist if the transducer were not present is the first effect. The second effect is an incomplete sample of the velocity along the chord which arises from the transducer not being flush mounted in the conduit (see Fig. 4C.68). This systematic error from both effects shall be included in the uncertainty analysis. Combined systematic errors have been estimated to undervalue the flow rate by 0.35% for one-meter path lengths to 0.05% for 5 m path lengths. The systematic error for any installation depends on the transducer design and may vary from the above values.

Other factors, including mounting apparatus may alter the flow streamlines in the vicinity of the meter section. Experience has shown that piping for signal cables attached to the conduit along the circumference of the conduit alters the flow streamlines when placed

Copyright ASME International
Provided by IHS under license with ASME
No reproduction or networking permitted without license from IHS
Not for Resale

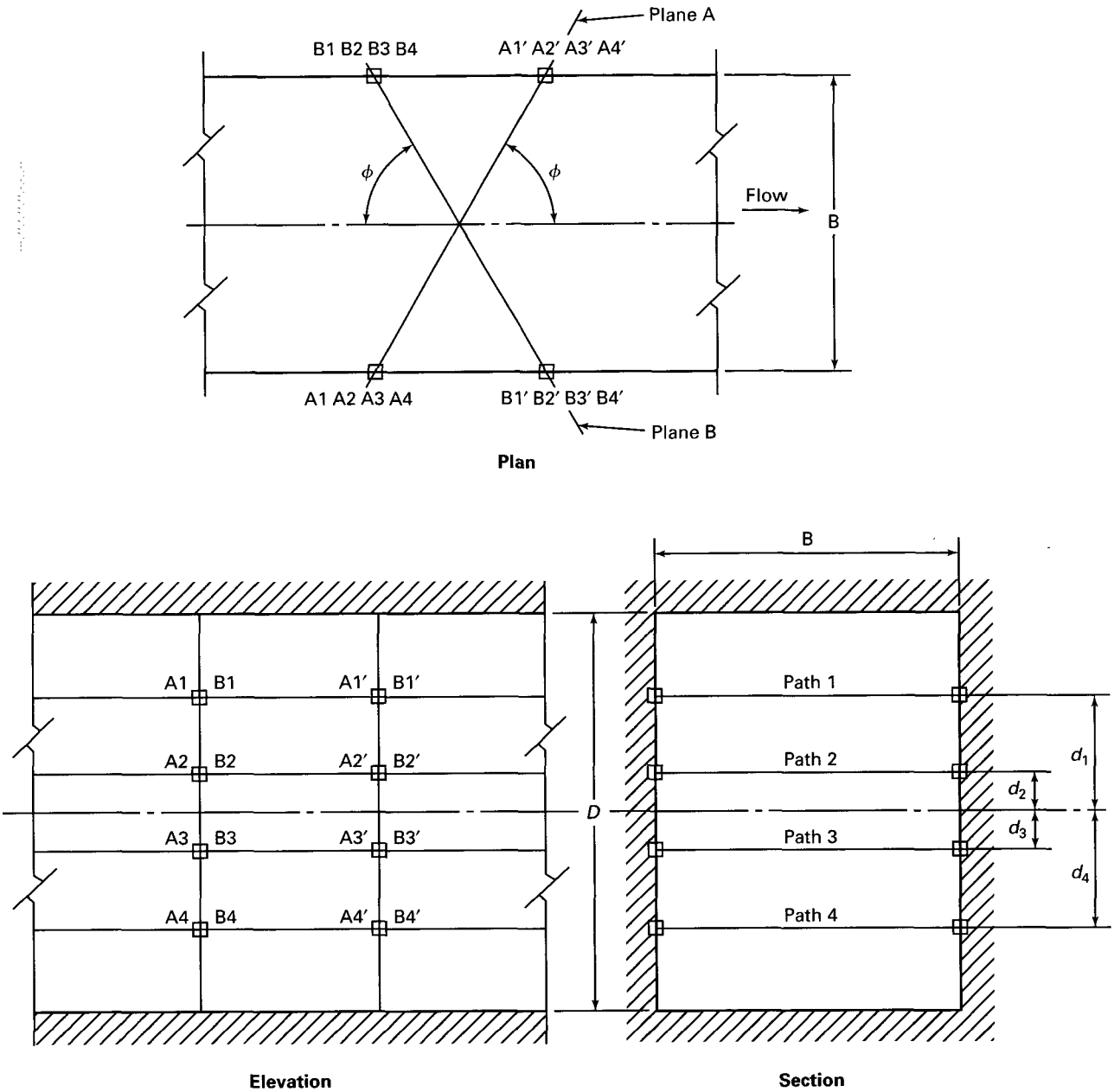

Fig. 4C.67 Ultrasonic Method – Typical Arrangement of Transducers in a Rectangular Conduit

either upstream or downstream of the internally mounted transducers. Runs of such piping shall be placed a minimum of 1 conduit diameter downstream of the meter section when the ratio of the diameter of the conduit to the piping is 50 to 1. When smaller ratios exist (i.e., smaller conduit diameters) the piping should be placed further downstream.

4C.69

The time delays in the electronic circuitry and cables and the times for the ultrasonic pulse to traverse any non-water parts of the chordal path, such as the acoustically transparent material in the face of the transducer holder, shall be determined and taken into account.

4C.70

If the above conditions are fulfilled, then by measuring the transit time of an ultrasonic pulse along a given path in both the upstream and downstream directions, the flow measurement will be virtually independent of the water's composition, pressure, and temperature.

Copyright ASME International
Provided by IHS under license with ASME
No reproduction or networking permitted without license from IHS
Not for Resale

Copyright ASME International
Provided by IHS under license with ASME
No reproduction or networking permitted without license from IHS

Table 4C.66 Integration Parameters for Ultrasonic Method

Method Chordal Path l	Legendre Method 4(8) Path Weight w_i	Position d	Chordal Path l	P 9(18) path Weight w_i	Position d	Jacobi-Gauss Method Chordal Path l	4(8) Path Weight w_i	Position d	Chordal Path l	9(18) Path Weight w_i	Position d
			1	0.08127	0.96816				1	0.09708	0.9511
1	0.34786	0.86114	2	0.18064	0.83603	1	0.3693	0.8090	2	0.18466	0.8090
			3	0.26061	0.61337				3	0.25416	0.5878
2	0.65215	0.33998	4	0.31234	0.32425	2	0.5976	0.3090	4	0.29878	0.3090
			5	0.33023	0				5	0.31416	0.0000
3	0.65215	-0.33998	6	0.31234	-0.32425	3	0.5976	-0.3090	6	0.29878	-0.3090
			7	0.26061	-0.61337				7	0.25416	-0.5878
4	0.34786	-0.86114	8	0.18064	-0.83603	4	0.3693	-0.8090	8	0.18466	-0.8090
			9	0.08127	-0.96816				9	0.09708	-0.9511
Shape factor k	Circular section 0.994			Circular section 0.9994			Circular section 1.00			Circular section 1.00	
	Rectangular section 1.0000			Rectangular section 1.0000			Rectangular Section 1.03425			Rectangular Section 1.0083	

Not for Resale

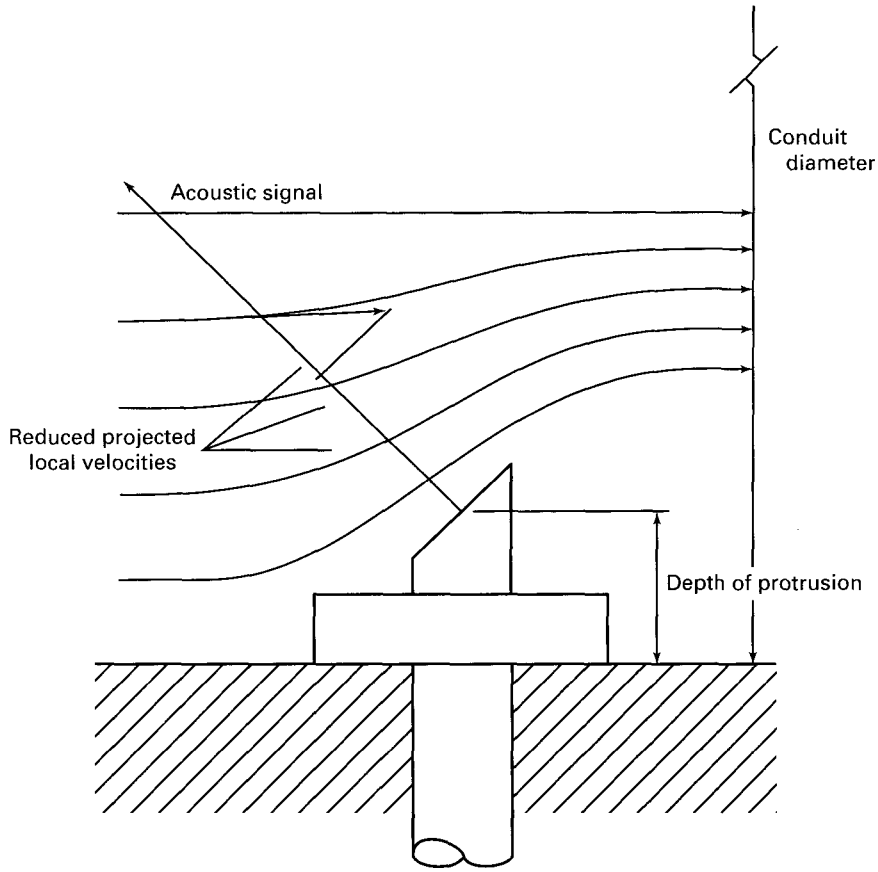

Fig. 4C.68 Distortion of the Velocity Profile Caused by Protruding Transducers

4C.71

To measure transit time along a given path, the transducers are arranged so that pulses are transmitted upstream and downstream at an angle relative to the axis of the pipe (see Fig. 4C.63). Angles from 45 deg to 65 deg have been shown to be satisfactory for ultrasonic flow rate measurement methods.

4C.72

If there are no transverse flow components in the conduit, and if the time delays referred to in para. 4C.69 are taken into account, the transit time of an ultrasonic pulse is given by

$$t = \frac{L}{c + EV \cos \Phi}$$

where

L = distance in the water along chordal path between the transducer faces, m (ft)
c = ultrasonic velocity in the water at the operating condition, m/s (ft/s)
Φ = angle between the longitudinal axis of the conduit and the measurement planes, deg
V = mean axial component of the flow velocity over distance L, m/s (ft/s)
E = +1 for signals traveling downstream
E = −1 for signals traveling upstream

Since the transducers are generally used both as transmitters and receivers, the difference in transit time may be determined with the same pair of transducers. Thus, the mean axial velocity crossing the path is given by

$$V = \frac{L}{2 \cos \Phi}\left(\frac{1}{t_d} - \frac{1}{t_u}\right)$$

where t_d and t_u are the transit times of an ultrasonic pulse downstream and upstream, respectively.

If there are transverse flow components, then

$$t = \frac{L}{c + E\,(V \cos \Phi + YV_c \sin \Phi)}$$

where

V_c = transverse component of the flow velocity having a component parallel to the acoustic path and averaged over the distance L
Y = factor equal to +1 or −1 depending upon the direction of the transverse component of the

Copyright ASME International
Provided by IHS under license with ASME
No reproduction or networking permitted without license from IHS
Not for Resale

flow parallel to the chordal path and depending upon the orientation of the chordal path (i.e., path in plane A or B in Fig. 4C.63). For a given transverse flow component Y = ±1 for a chordal path in plane A, and Y = ±1 for a chordal path in plane B.

The average axial velocity crossing a path is given by:

$$V = -YV_c (\tan \Phi) + \frac{L}{2 \cos \Phi}\left(\frac{1}{t_d} - \frac{1}{t_u}\right)$$

With two measurement planes as in para. 4C.66, the velocities are averaged, and the errors due to transverse flow are eliminated because the term $(-YV_c \tan \Phi)$ cancels.

4C.73

The flow rate Q can be obtained from the general equation

$$Q = \frac{kD}{2} \sum_{i=1}^{n} W_i V_i L_{wi} \sin \Phi$$

where

L_{wi} = distance across the conduit (wall to wall) along the chordal path i, m (ft)

D = maximum dimension of the conduit parallel to the intersection of the two measurement planes, as shown in Figs. 4C.63 and 4C.67.

W_i = weighting coefficients depending on the number of paths and the integration technique used

V_i = average velocity along path i as calculated from measured transit times, m/s (ft/s)

n = number of chordal paths

k = numerical integration correction coefficient (shape factor) which accounts for the error introduced by the integration technique chosen for the shape of the conduit

In a rectangular conduit of uniform cross-section, (L_{wi} *sin* Φ) is equal to the width B of the measurement section (see Fig. 4C.67).

The inherent difficulty of some integration techniques to integrate over sections of different configuration requires a shape factor k to be used. See Table 4C.66. (Table 4C.66 provides weighting coefficients w_i, chordal path positions d_i and k factors for 4 and 9 acoustic paths in one plane).

4C.74

The Gauss-Legendre and the Jacobi-Gauss quadrature integration methods meet the requirements of the Code. At least four chordal paths in each plane shall be used for a proper determination of the flow rate. For a four-path arrangement, the location of the paths and the weighting coefficients for the Gauss-Legendre and Jacobi-Gauss quadrature integration methods are as shown in Table 4C.66. When conditions do not permit sufficient straight length of penstock, more acoustic paths in a crossed plane arrangement can be used.

When the Jacobi-Gauss method is applied to a circular section, with the paths located at the specified distance from the center, the general formula is often used in the simpler form:

$$Q = \frac{D^2}{2} \sum_{1}^{n} W_i' V_i$$

where

$$W_i' = W_i \frac{L_{wi} \sin \Phi}{D}$$

For four paths

$$W_1' = W_4' = 0.217079$$

$$W_2' = W_3' = 0.568320$$

and for nine paths

$$W_1' = W_9' = 0.00300$$

$$W_2' = W_8' = 0.10854$$

$$W_3' = W_7' = 0.20562$$

$$W_4' = W_6' = 0.28416$$

$$W_5' = 0.31416$$

L_{wi} *sin* $\Phi = D$ *sin* α_i, where α_i defines the angular location of path ends relative to the direction along which D is measured (see Fig. 4C.63)

4C.75 Transducer positions and conduit dimensions shall be accurately measured in the field. The uncertainties in the measurements shall be accounted for in the analysis in para. 4C.80.

Special care shall be taken when measuring large conduits, which may not have perfectly symmetrical shapes. A representative maximum diameter shall be determined in the measurement section, perpendicular to the direction of the measurement paths as shown in Figs. 4C.63 and 4C.67. At least five equally spaced diameter measurements shall be taken including one at the center of the measurement section and one at each end (see Fig. 4C.75). These measurements shall be averaged to be representative of the maximum dimension D. A sufficient number of other measurements shall be taken to determine the shape of the conduit for the purpose of determining the effect of the conduit shape on the numerical integration correction coefficient k.

Accurate measurements of (1) the maximum dimension D, (2) the chordal path lengths L between transducer faces, (3) path lengths L_w between the wall of the conduit along the chordal paths, (4) the location of the acoustic

Copyright ASME International
Provided by IHS under license with ASME
No reproduction or networking permitted without license from IHS
Not for Resale

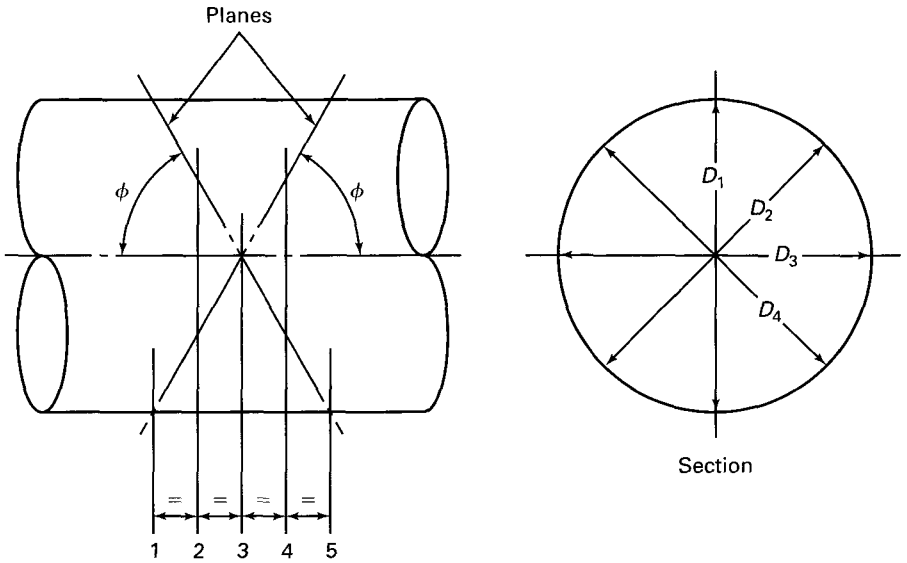

Fig. 4C.75 Locations for Measurements of D

paths, and (5) their angles relative to the center of the conduit are to be used in the calculation of the flow rate.

Errors in transducer locations shall be incorporated in the uncertainty analysis or by correction of the indicated flow rate.

4C.76

The velocity profile may be distorted by a bend. When two planes are used, the intersection of the two measurement planes shall be in the plane of the bend to minimize the effects of the transverse flow components on the accuracy of the measurement. Individual measurements of velocity shall be made for each path in order to obtain an indication of any distortion in the velocity profile and the magnitude of any transverse flow components. When one plane is used, it shall be oriented in the same manner as described above for two planes.

4C.77

Although the use of two planes compensates for most transverse velocity components, the measurement section shall be chosen as far as possible from any disturbances that could cause asymmetry of the velocity profile, or swirl, particularly pump-turbines operating in the pump mode. Other factors that may produce transverse velocity components or distortion of the velocity profile are flow conditions upstream caused by the shape of the intake, a number of bends, and changes in conduit diameter. Changes in conduit diameter downstream may also cause distortion of the velocity profile.

In turbine mode tests using four paths in each of two planes, there shall be a straight length of at least 10 conduit diameters between the measurement section and any important upstream irregularity. There shall be a straight length of at least 3 conduit diameters between the measurement section and any important downstream irregularity. When this is not practical, more acoustic paths may be required to achieve the accuracy required in this Code.

Satisfactory results in turbine mode can be obtained with a single four-path measurement plane located downstream of a straight length of 20 or more conduit diameters.

In pump mode tests, satisfactory results can be obtained with 4 acoustic paths in each of two planes when the measurement section is 20 or more diameters away from the impeller casing. When this is not practical, more acoustic paths may be required to achieve the accuracy required in this Code.

4C.78

The product of V and D shall be large enough to permit an accurate determination of the difference in pulse transit times taking into account the accuracy of the timer. Measurements with flow velocities less than 1.5 m/s (5 ft/s) should be avoided.

4C.79

Provision in the design and construction of the flow meter shall be made for checking that the equipment is operating correctly. This shall permit such checks as:

(a) showing pulses and their detection on an oscilloscope

(b) internal electronic tests of the program and constants

(c) comparison of calculated values of the speed of sound using the measured chordal path transit times

Copyright ASME International
Provided by IHS under license with ASME
No reproduction or networking permitted without license from IHS
Not for Resale

and path lengths with published values corrected for water temperature

(d) measurement of the average velocity along each path.

It is desirable to measure the ultrasonic pulse transit times independently and compare them with the results given by the measurement system.

Bubbles, sediment, and acoustic noise may disrupt the operation of the ultrasonic flow measurement system and should be avoided. If the disruption results in missed samples, enough valid samples shall be obtained to be compatible with the assumptions used in the error analysis. The design of the data acquisition and data processing system shall provide for the checking of the proportion of lost pulses.

4C.80

Both random uncertainties and systematic uncertainties shall be taken into account. For a detailed analysis, see PTC 19.1-1998, Test Uncertainty. The following sources of error have been identified:

(a) measurement of path lengths L_i and L_{wi}

(b) measurement of chordal path angles

(c) measurement of path spacing and conformity with the positions prescribed

(d) measurement of D

(e) time measurement and time resolution

(f) non-water path time estimation

(g) internal computational precision

(h) error due to flow distortion around the transducers

(i) error due to change in dimensions when the conduit is pressurized or temperature changes

(j) existence of transverse flow components

(k) flow profile distortions

(l) spatial variations of ultrasonic velocity

(m) spatial variation of flow velocity along the conduit

(n) variations of flow velocity and ultrasonic velocity

Items (a) through (i) are usually calculated and combined into an instrument systematic error. This systematic error for items (j) through (m) shall be estimated and combined with the instrument systematic error in a root sum square relationship to produce an overall systematic error. Item (n) is associated with variations of flow velocity and ultrasonic velocity and results in a random error.

The uncertainty in flow measurement using the Ultrasonic Method within the specifications of this Code is estimated to be within ±1%.

4C.81 Venturi Meter Method

4C.82

This method measures the difference between the pressure head at the inlet and at the throat of a Venturi to determine flow rate. The profile of a classical Venturi meter is shown in Fig. 4C.82. Minimum piping requirements for a venturi meter are given in Table 4C.82. Details of the construction, installation, and use of three types of venturi meters are given in ASME MFC-3M, Measurement of Fluid Flow in Pipes Using Orifice, Nozzle and Venturi. Only meters fabricated from welded steel plate are described in this Code and the above reference should be consulted for other details for venturi meters having cast or machined convergent entrances.

4C.83

There shall be no joining curvature between any of the sections of the venturi meter other than that resulting from the welding (i.e., $R_1 = R_2 = R_3 = 0$). The entrance cylinder A shall be concentric with the conduit, and the internal diameters of each shall not differ by more than 0.01 D. At least four equally spaced pressure taps shall be located in a plane at both the entrance and at the throat, as shown in Fig. 4C.82. No tap shall be located at the top or bottom of a horizontal meter. At least four equally spaced diameters shall be measured in the plane of each set of taps as close as possible to the taps. At the entrance, no single diameter measurement shall differ from the average by more than ±0.5%. At the throat, no single diameter measurement shall differ from the average by more than ±0.1%. The maximum roughness of all internal surfaces except throat shall be 6.3 μm (250 μin.). The maximum roughness of the throat shall be less than 1.6 μm (50 μin.).

4C.84

The details of a pressure tap are shown in Fig. 4B.11. If possible, all pressure taps shall be separately connected and valved so that each may be read individually. The pressure tap orifice diameter d shall be as small as the quality of the water permits but not less than 3 mm ($\frac{1}{8}$ in.) nor larger than 9 mm ($\frac{3}{8}$ in.). The length of the tap shall not be less than 2d. All burrs caused by drilling or reaming shall be removed by rounding each edge (inside and outside) to a radius not larger than $\frac{d}{4}$. The taps may be manifolded if desired but the inside diameter of the manifold and the connections to the manometer shall not be less than (d)(n) where n is the number of taps connected to each manifold.

4C.85

The flow rate Q is given by

$$Q = \frac{C(\pi D_2^2/4)(2g\Delta h)^{0.5}}{[1 - (D_2/D_1)^4]^{0.5}}$$

using any consistent system of units. The quantity Δh is the difference in static pressure head measured between the inlet and throat measuring sections.

Copyright ASME International
Provided by IHS under license with ASME
No reproduction or networking permitted without license from IHS
Not for Resale

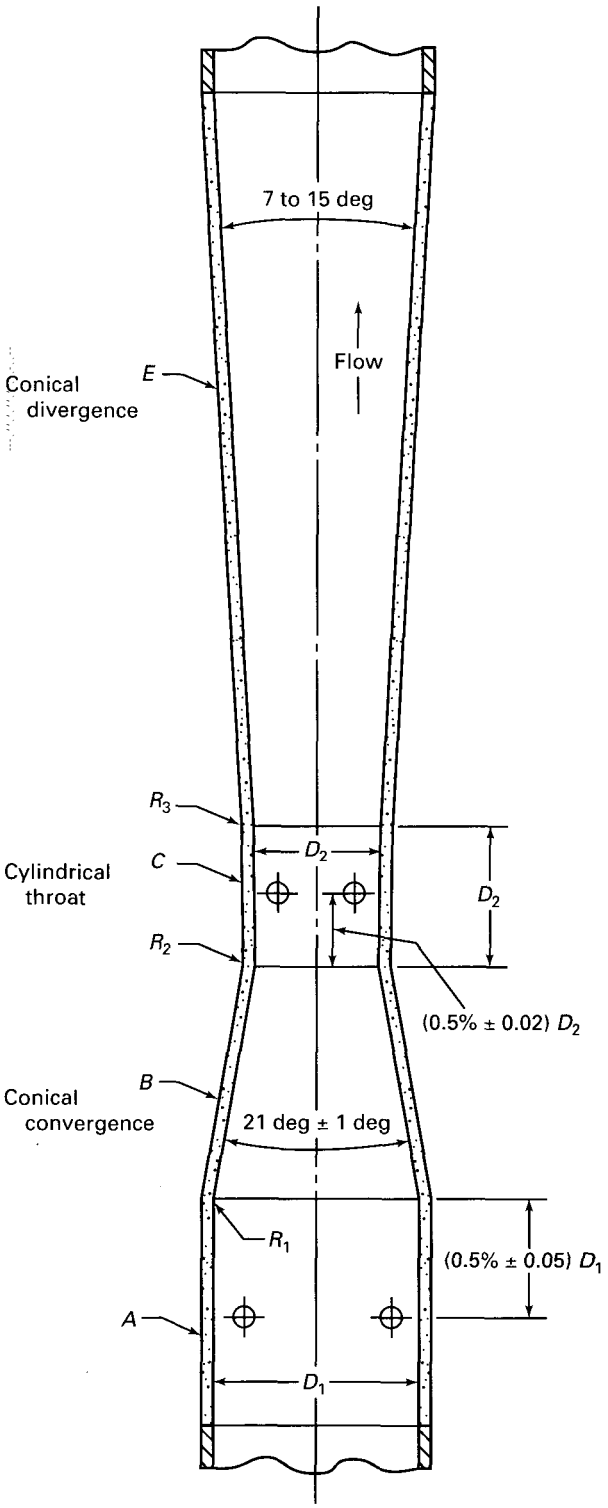

Fig. 4C.82 Profile of the Classical Venturi Meter

4C.86

The venturi meter discharge coefficient C shall be established by calibration. It is important that the velocity distribution in the flow approaching the Venturi meter correspond as closely as possible to that of well-developed turbulent flow in a straight circular conduit. For further discussions, see PTC 19.1-1998 and ASME MFC-3M.

4C.87

All fittings upstream of the Venturi meter may affect the coefficient C. The lengths of straight pipe specified in Table 4C.82 are the minimum required to ensure that this effect on the error in C will not exceed ±0.5%

4C.87.1 The uncertainty in flow measurement using the Venturi Meter Method within the specifications of this Code is estimated to be within ±1.5%.

4C.88 Dye Dilution Method

4C.89

The dye dilution method involves injecting a dye tracer, at a constant rate, into the flow to be measured. At a distance downstream, at which mixing is complete, samples are drawn off and analyzed to determine the dye concentration in the water. The flow rate is proportional to the dilution undergone by the dye. Since the dye is injected at a constant rate, the relationship between the concentration and the flow is given by the equation:

$$q\,C_1 + Q\,C_0 = (q + Q)\,C_2$$

where:

q = dye injection rate
C_1 = concentration of injected dye
Q = flow rate to be determined
C_0 = background concentration of dye in flow
C_2 = concentration of diluted dye in flow

The equation can be rearranged to:

$$Q = q\,\frac{(C_1 - C_2)}{(C_2 - C_0)}$$

However, since C_1 is greater than C_2 usually by a factor of 10^7, the equation reduces to:

$$Q = q\,\frac{C_1}{(C_2 - C_0)}$$

$(C_1/C_2 - C_0)$ is defined as the "Dilution Factor".

Figure 4C.89 shows a schematic representation of the dye dilution technique.

It is not practical to measure the dilution undergone by the dye directly, due to the extremely high concentration of the injected dye. The dilution can be determined by comparing the concentration of the diluted dye with that of a prepared standard solution, of a precisely known dilution. The standard solution is prepared by

Copyright ASME International
Provided by IHS under license with ASME
No reproduction or networking permitted without license from IHS
Not for Resale

Table 4C.82 Minimum Diameters of Straight Pipe Between Venturi Meter Inlet and Nearest Upstream Fitting

D_2/D_1	One 90 deg Bend [Note (1)]	90 deg Bends in Same Plane	90 deg Bends Not In Same Plane [Note (2)]	Reducer $3D$ To D Length Equal to $3.5D$	Expander $0.7D$ Length Equal to D	Wide Open Gate or Ball Valve
0.30	0.5	0.5	0.5	0.5	0.5	0.5
0.35	0.5	0.5	0.5	0.5	0.5	0.5
0.40	0.5	0.5	0.5	0.5	0.5	1.5
0.45	0.5	0.5	0.5	0.5	1.0	1.5
0.50	0.5	1.5	8.5	0.5	1.5	1.5
0.55	0.5	1.5	12.5	0.5	1.5	2.5
0.60	1.0	2.5	17.5	0.5	1.5	2.5
0.65	1.5	2.5	23.5	1.5	2.5	2.5
0.70	2.0	2.5	27.5	2.5	3.5	3.5
0.75	3.0	3.5	29.5	3.5	4.5	3.5

NOTES:
(1) The radius of curvature of all bends shall be at least equal to the conduit internal diameter.
(2) Published data indicate that two bends not in the same plane have minimum effect on the coefficient when all straight pipe is eliminated.

diluting a portion of the injected dye the same amount it is expected to undergo when injected into the flow stream.

The recommended dye for this method is the fluorescent dye Rhodamine WT, which was developed in the 1960's specifically for dye dilution flow applications. Rhodamine WT is detectable and stable in very low concentrations, non-toxic, resistant to adsorption, mixes readily in water, not usually present in natural water systems, and its fluorescence is proportional to its concentration in water, which can be accurately measured with a fluorometer.

The dilution factor, *DF*, of a flow sample from a test run can be determined by comparing the fluorescence of the test sample and the standard.

Since the *DF* of the standard is known (discussed in para. 4C.93), the *DF* of the test sample can be determined from:

$$DF_t = DF_s\left(\frac{F_s}{F_t}\right)$$

where:

DF_t = dilution factor of test sample
DF_s = dilution factor of standard solution
F_s = fluorescence of standard solution
F_t = fluorescence of test sample

Then the flow to be determined, Q, is therefore:

$$Q = (q)\,(DF_s)\left(\frac{F_s}{F_t}\right)$$

4C.90

There are five steps in executing the dye dilution method:

(a) injecting the dye
(b) measuring the injection rate of the dye
(c) preparing standards
(d) collecting samples of diluted dye
(e) analyzing the concentration of the diluted dye samples and calculating the flow

4C.91 Injecting the Dye

Figure 4C.89 shows a schematic representation of the Dye Dilution Method and a typical injection arrangement.

The dye must be injected at a constant rate with minimum pulsations, using any precision positive displacement pump, such as a gear, peristaltic or piston pump, driven by a synchronous motor to ensure constant speed. A variable rate pump is useful to allow proportioning of the injection rate with the flow rate to be measured. In theory, any concentration of injection dye may be used; however, in practice the optimum fluorometer detection concentration for Rhodamine WT is 10 parts per billion, ppb. Therefore the strength of the injection mixture and the rate of injection should be matched to achieve 10 ppb in the test sample after the dilution that is expected to occur in the test. If visibility of dye in the flow to be measured is a concern, a target concentration of 5 ppb can be used.

Injection rates are very low, in the order of 1 to 10 ml/s, in order to minimize the volume of dye required when many injections are made during a test series. In some situations, where the volume of the injection line between the pump and the injection point is large, direct injection into the flow to be measured may not be feasible because of the long transit time of the dye. In these circumstances, a secondary flow into which the dye is injected may be used to transport the dye to the injection point. Care must be taken to ensure the transport water

Copyright ASME International
Provided by IHS under license with ASME
No reproduction or networking permitted without license from IHS
Not for Resale

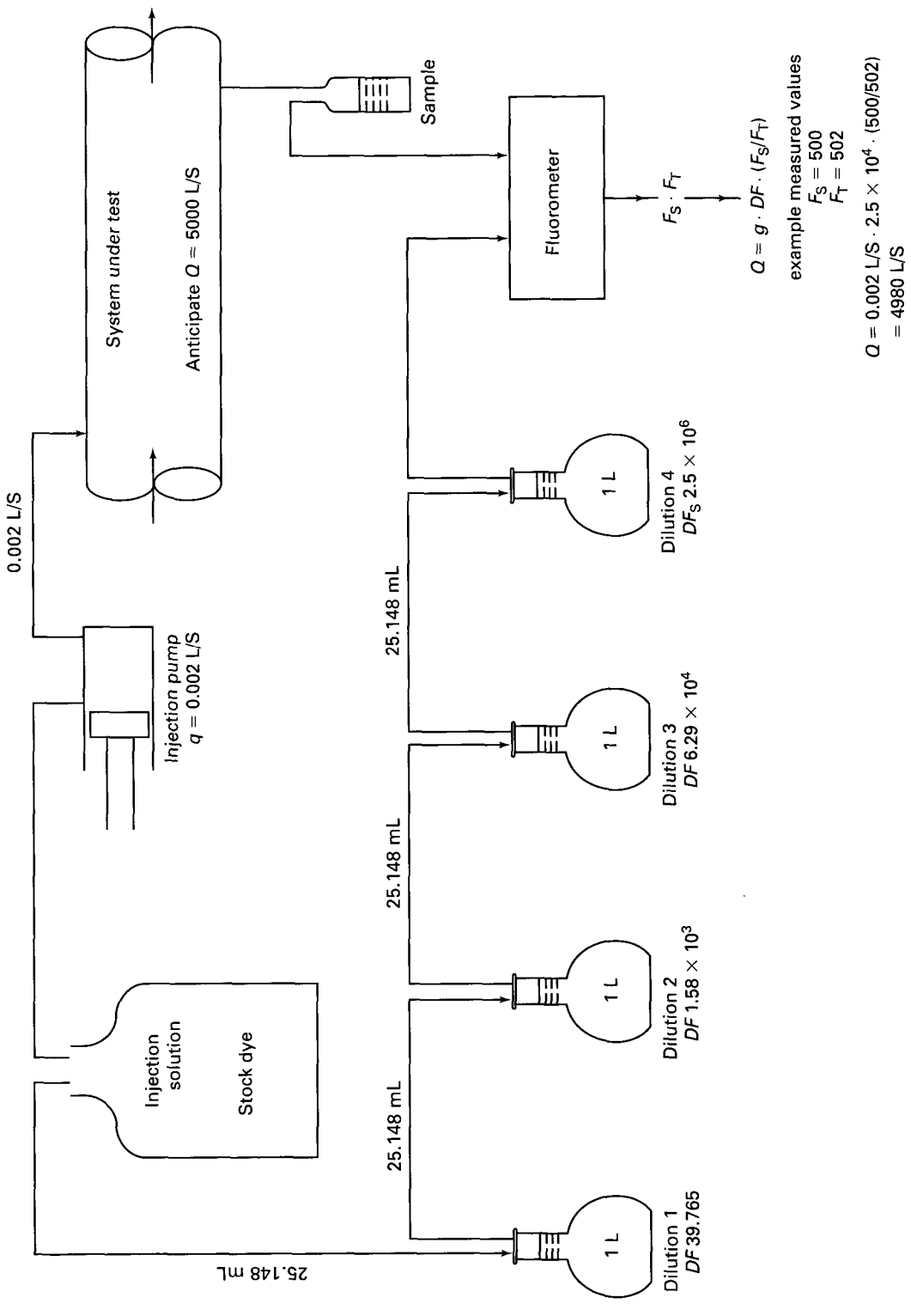

Fig. 4C.89 Schematic Representation of Dye Dilution Technique

Copyright ASME International
Provided by IHS under license with ASME
No reproduction or networking permitted without license from IHS
Not for Resale

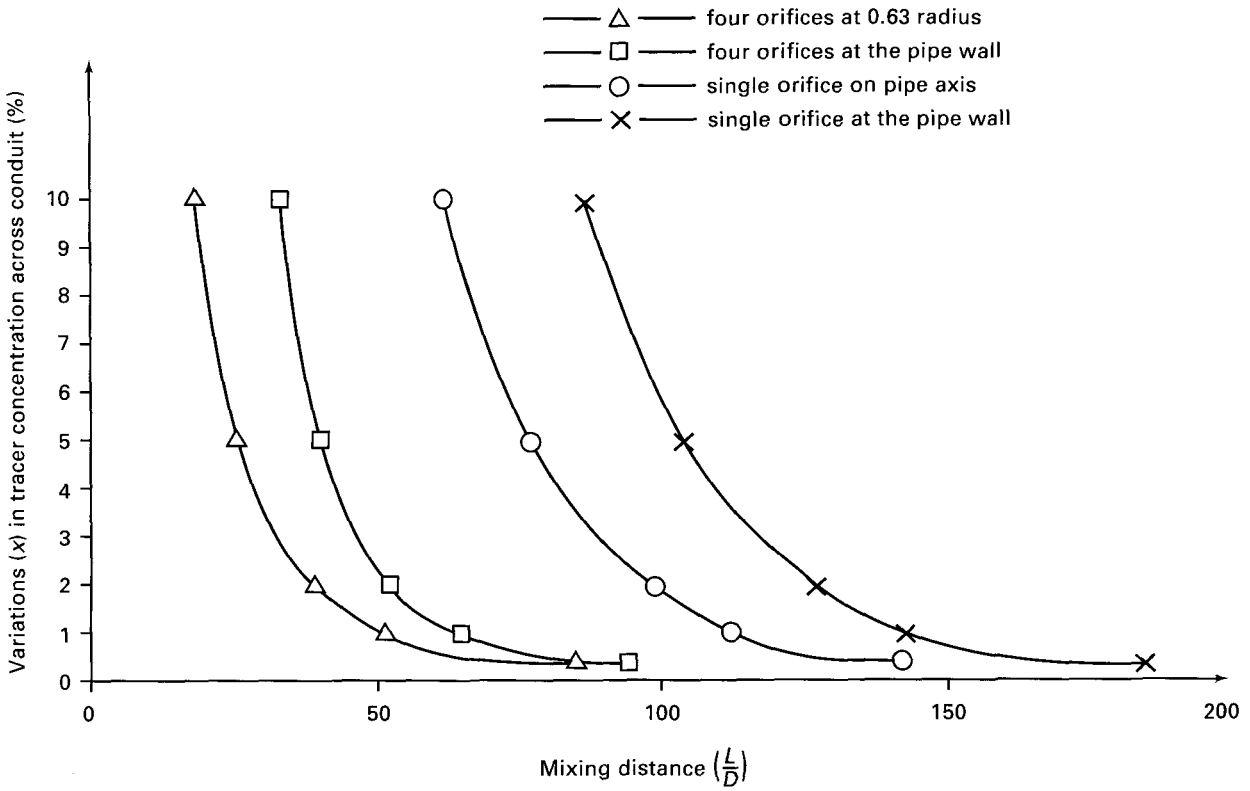

Reproduced from ISO 2975/I — 1974(E): *Measurement of Water Flow In Closed Conduits - Tracer Method - Part 1: General, Figure 3*

Fig. 4C.91 Experimental Results: Allowable Variation in Tracer Concentration

[© International Organization for Standardization (ISO). This material is reproduced from ISO 2975/I-1974 with permission of the American National Standards Institute on behalf of ISO. No part of this material may be copied or reproduced in any form, electronic retrieval system or otherwise or made available on the Internet, a public network, by satellite or otherwise without the prior written consent of the American National Standards Institute, 25 West 43rd Street, New York, NY 10036.]

flow rate is relatively constant. It is not necessary to know the flow rate of the transport water because that water is added to the system and makes up part of the total volume being measured.

The duration of injection must be long enough so that stable concentration conditions are established at all points of the sampling cross-section to allow a period of stable sampling for at least several minutes. A suitable duration must be determined by preliminary trial injections.

Stock Rhodamine WT is usually supplied in concentrated form, requiring some pre-dilution before injection, therefore preparation of the injection mixture requires careful attention to ensure it is fully homogeneous. This can be obtained by vigorous mixing, by means of a mechanical stirrer or a closed circuit pump. It is advisable to prepare the injection solution in a separate container from the supply container. The injection solution should be prepared using water from the system under test. This ensures that any background fluorescence C_0, or any influencing agent, affects the standard to the same degree as it affects the test sample. Tap water should not be used because it contains chlorine, which reduces the fluorescence. If the system water is turbid, the suspended sediment should be allowed to settle and the clear water decanted and used for the injection solution. Sufficient solution should be prepared to supply a full series of tests, and stored in a clean, inert, non-adsorptive, light proof, sealable container. The mixture must be stirred frequently and thoroughly prior to each injection.

The injection system must be designed to provide complete mixing of the dye in the flow stream, before the point of sampling. Injection systems can range from

Copyright ASME International
Provided by IHS under license with ASME
No reproduction or networking permitted without license from IHS
Not for Resale

a single point through the conduit wall, to a multi point injection manifold located across the conduit cross section. The selection of the injection system depends on the natural mixing provided by the conduit before the sampling point and accessibility to the conduit. Where the conduit is not long enough to provide thorough mixing for a single injection point, mixing can be improved using a multi-orifice injection manifold; high velocity injection normal or backwards into the flow stream; or vortex generators located downstream of the injection. Paragraph 4C.94 gives a procedure to determine whether adequate mixing is occurring.

Mixing is aided by bends and obstructions in the flow stream. Guidelines for design of the injection system are given in Fig. 4C.91. For a single point wall tap injection, usually 200 diameters of straight conduit will provide full mixing.

In the case of the pumping mode of pump-turbines, a convenient injection point is into the draft tube, either through the draft tube access door or a manifold across the tailrace section. The changes in velocities the flow goes through the pump casing also provides additional mixing.

Injecting upstream of a machine intake or downstream of a machine draft tube are not permitted due to possible recirculation and consequential loss of dye from entering the flow being measured.

It is important to ensure that there is no flow path where concentrated dye can leave the main flow prior to the dye being fully mixed. The entire injection system should be protected from sunlight as much as possible.

4C.92 Measuring the Injection Rate of the Dye

The injection rate must be measured by a primary method, either volumetric or gravimetric. Volumetric would be by timing the filling or emptying of a volumetric flask. Gravimetric would be by timing the weight change due to filling or emptying of a container. Since the Dye Dilution Method is volumetric, the gravimetric method must also take into account the specific weight of the dye during the calibration. The calibration must be conducted using a dye mixture the same concentration used during the test injections. When a fixed flow rate pump is used, having no provision for varying the flow rate, calibration before and after the test is acceptable. When a variable rate pump is used, the flow rate must be calibrated during each test run. The calibration must provide an uncertainty in injection rate no greater than 0.25%. This would be the combined uncertainty of the volumetric flask or weigh scales, and the timing device.

4C.93 Preparing Standards

Figure 4C.89 shows a typical arrangement of standard preparation. Standards are prepared to the expected diluted sample concentration of 10 ppb. As a minimum, at least two separate sets of standard solutions should be prepared and compared to the test sample for analysis. Each standard is compared separately to the test sample, with the final flow value taken as the average of the flows calculated from each standard. The systematic uncertainty of the flow rate measurement decreases with the use of additional standards. Although the diluted dye concentration and dilution factor have a linear relationship, it is recommended when a large range of flow rates is to be measured, using a constant injection mixture, sets of standards be prepared to match the expected test sample concentration.

The standards should be prepared in as close to a laboratory quality environment as possible for precise measurement of dye and water quantities and cleanliness to reduce possible contamination. Each standard is prepared to the expected diluted sample concentration of 10 ppb. The standards must be prepared with the same injection solution used in the test runs and, in order to cancel any background effects, with the same water in the system under test.

To prepare the standard, the target dilution factor is:

$$DF_s = \frac{Q}{q}$$

Since this value is of a large magnitude, frequently in the order of 10^7, standards are prepared by serial dilution, in which successive solutions are diluted in turn until the required overall dilution factor is obtained.

A four serial dilution is usually performed, in which the target *DF* for each step is:

$$DF = (Q/q)^{0.25}$$

The dilutions can be performed gravimetrically or volumetrically. It is essential that no contamination from a higher concentration solution enters a lower concentration solution, and accurate measurement in each step must be made. Rigid adherence to sound laboratory practice must be followed.

4C.94 Collecting Samples of the Diluted Dye

The sampling point must be located far enough downstream of the injection location to ensure that complete mixing of the injected dye has occurred. Complete mixing is considered to occur when both spatial and temporal variations in dye concentration at the sampling location are less than 0.5%. This must be confirmed by analysis of preliminary trial runs at least at maximum and minimum test flow rates before the official tests proceed.

Sampling from a machine tailrace in a turbine test, or downstream of a machine discharge in a pump test, is not permitted due to possible recirculation and increased dilution occurring.

Spatial is the variation of dye concentration across the conduit at the sampling cross-section. This is measured by taking samples from at least four points, using either

Copyright ASME International
Provided by IHS under license with ASME
No reproduction or networking permitted without license from IHS
Not for Resale

a probe sampling across the conduit diameter or radial taps on the conduit wall, and comparing them. The variation between each sample, determined as follows, must not exceed 0.5%.

$$\left(\frac{1}{\overline{X}}\right)\frac{t_{n-1}(S)}{\sqrt{n}} \le 0.5\%$$

where:

t_{n-1} = Student's t coefficient for 95% confidence
S = standard deviation of fluorescence of n samples
n = number of samples
$\overline{X}$ = mean fluorescence of n samples

If the spatial variation is greater than 0.5%, improvements must be made to increase the mixing process, by such means as increasing the mixing length, increasing the number of injection points, adding vortex generators, or using high velocity injection.

When it is confirmed that the spatial variation is satisfactory, the individual sampling points may be joined together for convenience in a manifold, equal flow from each point must be ensured to result in one sampling point.

Temporal is the variation of dye concentration at the sampling location over time. This is measured by analysis of repeated samples, or analysis of fluorescence data, taken while monitoring during the sampling period. The variation over the sampling period, determined as follows, must not exceed 0.5%.

$$\left(\frac{1}{\overline{X}}\right)\frac{t_{n-1}(S)}{\sqrt{n}} \le 0.5\%$$

where:

t_{n-1} = Student's t coefficient for 95% confidence
S = standard deviation of recorded fluorescence values
n = number of recorded fluorescent values
$\overline{X}$ = mean of recorded fluorescent values

If the temporal variation is greater than 0.5%, the duration of the sampling period, or mixing in the conduit, must be increased.

During the sampling process it is necessary to monitor the dye concentration as the dye passes the sampling point. This gives direct confirmation that the dye concentration has fully developed and is stable prior to and during sample collection.

As dye is being injected at a point upstream, a continuous sample of water from the sample point, of at least 4 L per minute, is bled from the system and passed through a monitoring fluorometer, and then to drain. As the injected dye passes the sampling point, the fluorometer will indicate an increase in dye concentration and it is plotted on a chart recorder or monitored with another indicating device. When the dye concentration is stable, indicating full mixing equilibrium has occurred, a sample is directed to a collecting bottle for later analysis. The sample bottles should be laboratory quality, clean, and opaque to light. The bottles should be stored away from light until the analysis is conducted. Figure 4C.94 shows a typical chart trace. The entire sampling system should be protected from sunlight as much as possible.

The sample should be collected throughout the stable period of the injection. More samples should be collected than required for one analysis, allowing spare sample, which can be retained, if repeat analysis is necessary. At least 1 L of sample should be collected. Where the sampling site is not suitable for analysis procedures the samples can be transported to another location.

4C.95 Analyzing the Concentration of the Diluted Dye Samples and Calculating the Flow

The flow is calculated using the equation given in para. 4C.89.

$$Q = q \cdot DF_s \cdot \left(\frac{F_s}{F_t}\right)$$

The fluorescence intensity of Rhodamine WT is inversely related to temperature. Therefore the temperature of the test sample and the standard solution must be within 0.2°C of the same temperature when each are analyzed. If it is not possible to achieve a temperature difference within 0.2°C their fluorescence must be corrected to the same temperature before comparison. The temperature correction for Rhodamine WT is:

$$F_c = F_m\, e^{0.026\,(T_s - T_r)} \text{ (see note below)}$$

where:

F_c = corrected fluorescence at reference temperature T_r (°C)
F_m = measured fluorescence at sample temperature T_s (°C)

NOTE: An exponent value of 0.026 may be used as an initial trial value. However, it is recommended that the value for each fluorometer be experimentally determined.

Analysis of the sample may be performed in either of two ways.

4C.96 Analysis Method A

The fluorometer is equipped with a special glass cuvette into which the sample is placed for analysis. Sufficient sample should be collected to allow at least six fillings of the cuvette. It is recommended that at least double this amount be collected to provide back-up spare sample if repeat analysis is necessary. One liter of sample should be sufficient. The test sample bottles and standards bottles should be placed in a circulating water bath for temperature equalizing and remain there throughout the analysis procedure. The temperature of the sample and the standards must agree within 0.2°C before the analysis is made, or temperature correction

Copyright ASME International
Provided by IHS under license with ASME
No reproduction or networking permitted without license from IHS
Not for Resale

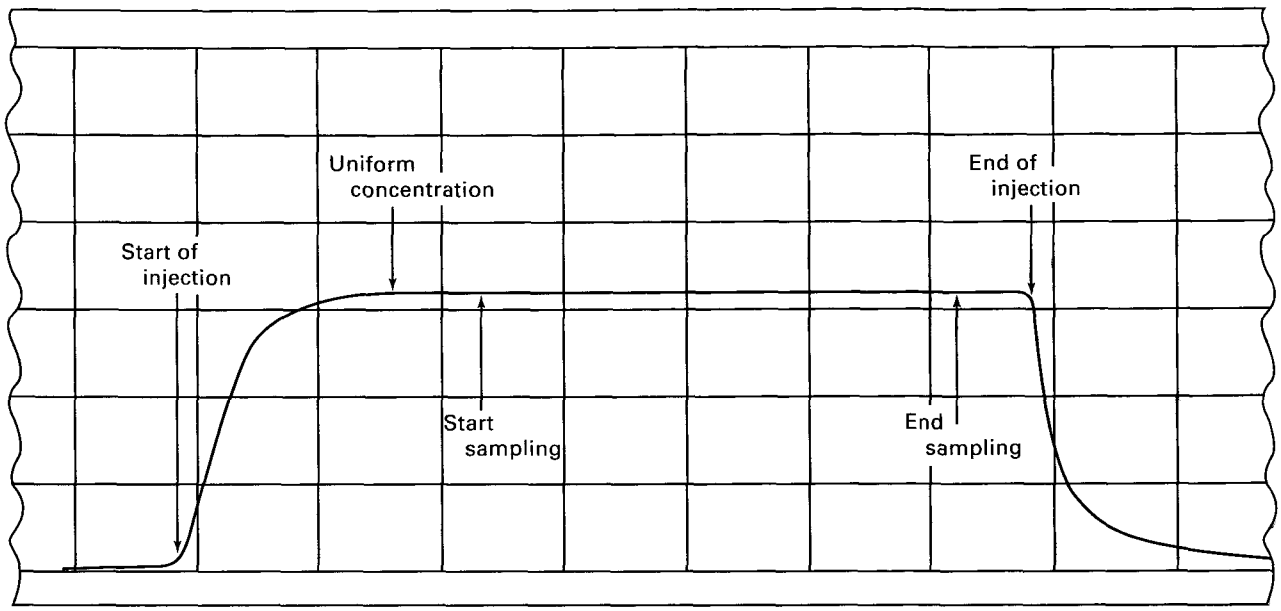

Fig. 4C.94 Typical Chart Recording During Sampling

applied. The temperature monitoring should be conducted in bottles containing dummy samples collected from the flow stream at the same time as the samples.

The fluorescence of the test sample and the standard solution is measured by inserting a cuvette of each, in turn, into the fluorometer, and recording the value. This should be repeated at least six times and an average value obtained for each. Increased repetition of analysis reduces the uncertainty in the estimate of the true dye concentration; however practice indicates six repetitions provides sufficient accuracy without unduly lengthening the analysis process.

4C.97 Analysis Method B

The fluorometer is equipped with a flow-through measuring cell, and the sample is circulated through the cell from either the sample bottle or directly from the system under test. As the sample passes through the measuring cell, its fluorescence and temperature are automatically measured, and the fluorescence level adjusted to a predetermined reference temperature. This data is then transmitted to a data logger, which can also compute the flow equation to give the test flow value. The circulation loop must be flushed thoroughly with the sample before beginning the data collection. Approximately one third of the sample should be used for flushing. The sample should be measured at least every five seconds, for a duration of at least one minute. The temperature should be measured within ±0.1°C .

The standard solutions are analyzed using the same procedure, adjusting their measured fluorescence to the same reference temperature as the test sample. The standard solutions must be analyzed immediately before or after the test sample.

The advantage of this method is that analysis is rapid, and the sample and standards are less susceptible to contamination due to repeated handling.

4C.98

The accuracy of the dye dilution method is dependent on several factors.

(a) accuracy of the dye injection rate

(b) homogeneity of the injection mixture

(c) completeness of mixing at the sampling location

(d) accuracy of measurement of sample and standard fluorescence

(e) fluorescence temperature correction of sample and standard

(f) accuracy of the weight and volume measurements in the preparation of the standards

4C.99

The uncertainty in each of the above parameters should be evaluated for contributions from systematic and random sources. The recommended maximum combined uncertainty in each parameter is:

(a) injection rate, 0.25%:

(1) systematic – accuracy of instruments used to calibrate injection pump

(2) random – statistical variation in pumping rate measured by repeated calibrations of injection pump

(b) homogeneity of injection mixture, 0.25%

(c) completeness of mixing, 0.5% – spatial and temporal variation as defined in para. 4C.92.

(d) measurement of sample and standard fluorescence, 1.25%:

Copyright ASME International
Provided by IHS under license with ASME
No reproduction or networking permitted without license from IHS
Not for Resale

(1) systematic – accuracy of fluorometer, readout should not be less than 50% full scale

(2) random - variation in repeated measurement of each sample and standard, this can be reduced by performing additional measurements

(e) fluorescence temperature correction of sample and standard, 0.5% – maximum 0.2°C temperature difference between sample and standard

(f) measurements in calculation of dilution factor of standard, 0.25% – accuracy of weigh scales, volumetric flasks, specific weight of solutions

4C.100

The overall uncertainty in flow measurement is reduced by increasing the number of standards used in the comparison to sample.

4C.101

The uncertainty in flow measurement using the Dye Dilution Method within the specifications of this Code is estimated to be within ±1.5%.

4C.102 Volumetric Method

4C.103 Principle

This method of flow rate measurement is based on determining the change in volume over a timed period in either the headwater or tailwater reservoir of a hydroelectric plant. The average flow rate of the machine during the test run is determined by dividing the change in volume, corrected for any leakage, evaporation or inflow, by the time of the test run. This method is only practical for a plant with a well-defined reservoir small enough so that a suitable change in reservoir elevation will take place during a test run. It is especially suitable for measuring cycle efficiency of pump-turbines because errors in determination of reservoir volume tend to cancel.

4C.104 Limits of Application

An artificial reservoir with well-defined boundaries for which accurate area surveys can be made is best suited for volumetric flow measurement. Natural basins may be used provided reservoir banks are well defined and can be accurately surveyed, and provided adequate consideration is given to absorption and resorption of the banks during filling or emptying. The reservoir must be small enough so that sufficient level change can be achieved during a single test run to ensure acceptably low uncertainty (typically less than ±0.5%).

4C.105 Reservoir Area Measurements

Reservoir areas shall be accurately determined for at least five elevations over the range that is to be used for testing. Areas may be determined either by geometrical measurements or by photogrametry methods. If aerial photography is used it shall be done from a sufficient altitude to include the entire reservoir in a single photograph. The reservoir level should preferably be rising and there should be minimal wave action during the survey.

4C.106 Reservoir Level Measurements

The water level shall be measured simultaneously in at least four locations. For large and/or irregular shaped reservoirs, one measuring location for each 100 000 m^2 of surface area is recommended. The location of the level gaging stations shall take into account the shape of the reservoir and possible effects of seiche and wind.

4C.107 Stilling Wells

Although it is possible to retrofit measuring devices in a reservoir after construction, consideration should be given to their location and design during the design and construction of the reservoir. The most suitable arrangement usually utilizes a measuring device in a stilling well with interconnecting conduit to a desired location in the reservoir depths. Fixed elevation benchmarks shall be provided to allow these reservoir elevations to be correlated.

4C.108 Pre-Test Calculations

A plot of reservoir volume change vs. water elevation shall be prepared as an aid in determining the range of reservoir elevations best suited for flow rate measurements. This plot will also be used in determining the length of a test run. The duration of each test run should be such that the uncertainty in the change in volume is less than ±1%.

4C.109 Index Test

For volumetric flow measurement of pump-turbines, consideration must be given to changes in wicket gate opening with changes in reservoir level. An Index Test should be performed on the machine to determine optimum wicket gate opening for the efficiency testing.

4C.110 Inflow/Leakage Test

A test shall be conducted prior to the commencement of the performance test to determine the rate of leakage, evaporation and/or inflow in the measuring reservoir. The inflow/leakage tests shall be carried out immediately prior to the performance test and under comparable climatic conditions in order to represent actual conditions occurring during the test. Reservoir water elevation shall be monitored for a sufficient time, at least 8 hr, with no flow into or out of the reservoir from the power station. During this test all known sources of inflow and leakage shall be accurately measured. Flows into or out of the reservoir, which cannot be measured or accounted for shall not exceed ±1% of the expected

Copyright ASME International
Provided by IHS under license with ASME
No reproduction or networking permitted without license from IHS
Not for Resale

flow rate of the machine during the performance test. Results of the leakage test shall be used in the test computations. A repeat of the leakage test after testing may be waived by the Chief of Test if results are satisfactory.

4C.111 Test Procedure

Tests using this system of flow measurement require that the machine be operated at a fixed wicket gate position for up to several hours. If this cannot be achieved under control of the governor, then machined blocks shall be used for establishing wicket gate position. The machine must be started, desired operating conditions established and allowed to stabilize before the test is started. All test readings shall be taken over the duration of the test run, and a sufficient number of readings of each parameter shall be made to carry out an error analysis as well to determine any variation in operating conditions. All volumetric level gages shall be read simultaneously and their average shall be used for determining reservoir elevations. Preliminary test runs as required by para. 3.19 may be carried out over a shorter period of time than that for a test run. Alternatively, a portion of the final test run may be considered as a preliminary run. For example, the first 30 min of a test run may be used as a preliminary run.

4C.112 Weather Conditions

Tests should be carried out on a clear, calm, rainless day in order that weather factors have a minimal effect on the volumetric measurements. If the rainfall and/or runoff occurring during the test is in excess of 1% of the estimated volume to be measured the test shall be voided. For amounts of 1% or less the volume measurement shall be corrected by the estimated runoff. The effect of wind on the reservoir level may be determined by simultaneous readings of all level gages. If the difference in volume calculated from the average of all level gages and that calculated from all level gages but one is greater than 0.5% of the estimated volume to be measured, the test shall be voided.

4C.113 Special Applications

The volumetric method is particularly well suited for determining "cycle efficiency" of a pump-turbine. For determining the cycle efficiency, the machine is operated in one mode (e.g., turbining) for a selected period of time and the reservoir elevations accurately determined for the starting and ending times. During the reverse mode (e.g., pumping) the times corresponding to the previously determined elevations are accurately determined and this elapsed time becomes the duration of the test run. The cycle efficiency is then the output energy generated by the turbine during the turbine test run divided by the input energy consumed by the pump during the pump test run. The turbine net head and pump total head cannot be independently adjusted for this type of test.

4C.114 Estimated Uncertainty

The uncertainty in flow measurement using the Volumetric Method within the specifications of this Code is estimated to be within ±1.5%.

4D POWER MEASUREMENT

4D.1

Power output from the turbine or power input to the pump shall be determined by either the indirect or direct method.

(a) The **indirect method** utilizes electrical measurements of power output from the generator or input to the motor, the previously determined generator or motor losses, and appropriate corrections for the operating conditions during the test.

(b) The **direct method** determines the power delivered by the turbine or applied to the pump on the basis of measurements of torque and shaft speed. Torque is measured by a transmission dynamometer. Speed is measured according to subsection 4E.

4D.2 Indirect Method of Power Measurement

In the indirect method, the generator or motor is utilized as a dynamometer for measuring the power output from the turbine or the power input to the pump. Turbine power output is then determined by adding the generator losses to the measured generator power output, and pump power input is determined by subtracting the motor losses from the measured motor power input (see also paras. 4D.4 and 4D.16). The generator or motor losses shall have been previously determined, for the conditions such as output, voltage, power factor, speed, direction of rotation, and temperature expected during the test of the turbine or pump.

4D.3

All losses specified in IEEE (Institute of Electrical and Electronics Engineers) Standard 115-1995, Tests Procedures for Synchronous Machines, shall be determined. The I^2R losses so determined shall be corrected for the temperature, armature current, and field current measured during the performance test.

The power supplied to separately driven generator auxiliary equipment, such as excitation equipment, motor driven cooling fans, motor driven or circulating pumps is frequently supplied from other power sources rather than directly from the turbine. If these losses are included in the total losses for the generator, they shall be determined separately and excluded.

4D.4

Measurement of effective power output at the generator terminals or effective power input at the motor terminals shall be made in accordance with IEEE (Institute

Copyright ASME International
Provided by IHS under license with ASME
No reproduction or networking permitted without license from IHS
Not for Resale

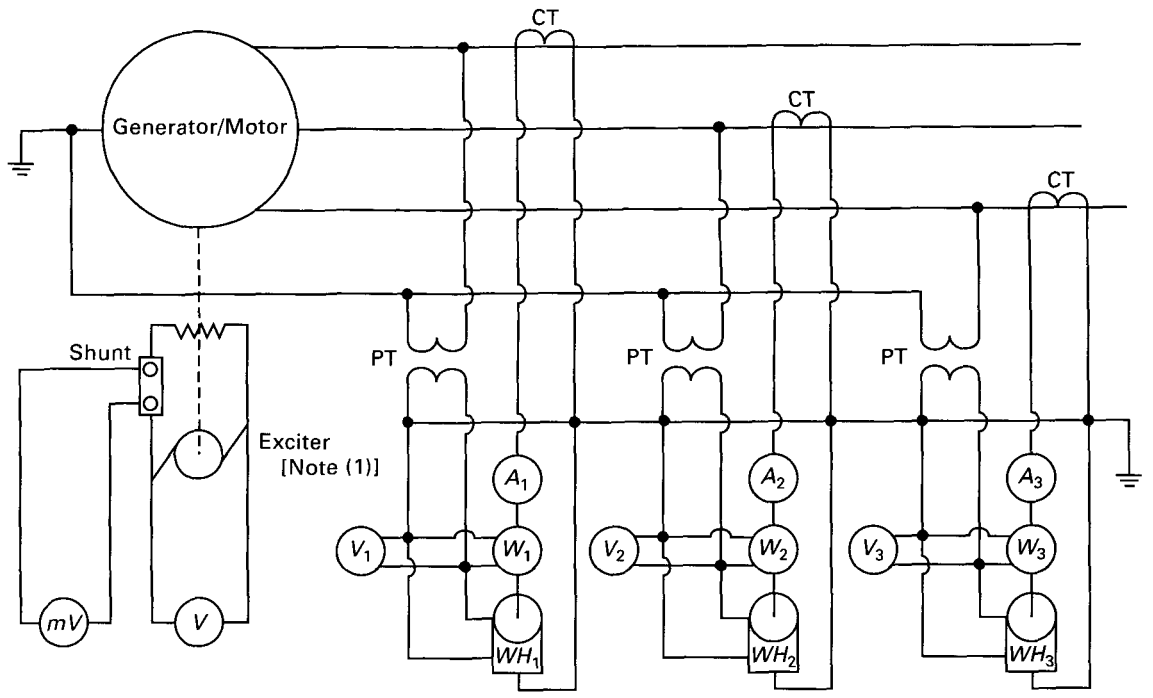

NOTE:
(1) If mechanically connected exciter is used.

Fig. 4D.7.1 Three-Wattmeter Connection Diagram

of Electrical and Electronics Engineers) Standard 120, Electrical Measurements in Power Circuits.

4D.5

During the turbine or pump test, the generator or motor shall be operated as near to specified voltage and unity power factor as existing conditions permit. Should the voltage be other than specified and/or the power factor be other than unity, suitable corrections in the computation of the power output or input and losses shall be made.

4D.6

The power shall be measured by means of wattmeters or watt-hour meters. Subsequent reference in this Code to wattmeters shall include watt-hour meters as an equivalent substitute.

4D.7

The connections, which are used for reading power, depend on the connections of the generator or motor. If the neutral of the generator or motor is brought out and is connected to the network or to ground during the test, the three-wattmeter connection as in Fig. 4D.7.1 shall be used. If the neutral is brought out, but not connected to the network or to ground during the test, a three-wattmeter connection, similar to Fig. 4D.7.1 with the neutral connected to the potential transformer primary neutral, or the two-wattmeter connection for measuring three phase power (Fig. 4D.7.2), shall be used. The three-wattmeter method affords simpler and more nearly correct calculation of corrections of ratio and phase angle errors of the instrument transformers and for scale corrections of the wattmeters or registration errors for the watt-hour meters if such corrections are required.

If the neutral is not available, the two-wattmeter method shall be used for measuring three-phase power. One point of each secondary circuit shall always be connected to a common ground as shown in the figures.

4D.8

Proper corrections shall be made for temperature effects in the instruments. In cases of excessive temperature variation, an enclosure shall be used to insure suitable temperatures for the instruments.

4D.9

The indicating instruments shown in Figs. 4D.7.1 and 4D.7.2 give a check on power factor, load balance, and voltage balance, and show the proper connections to be applied so that power output and losses may be accurately determined.

Copyright ASME International
Provided by IHS under license with ASME
No reproduction or networking permitted without license from IHS
Not for Resale

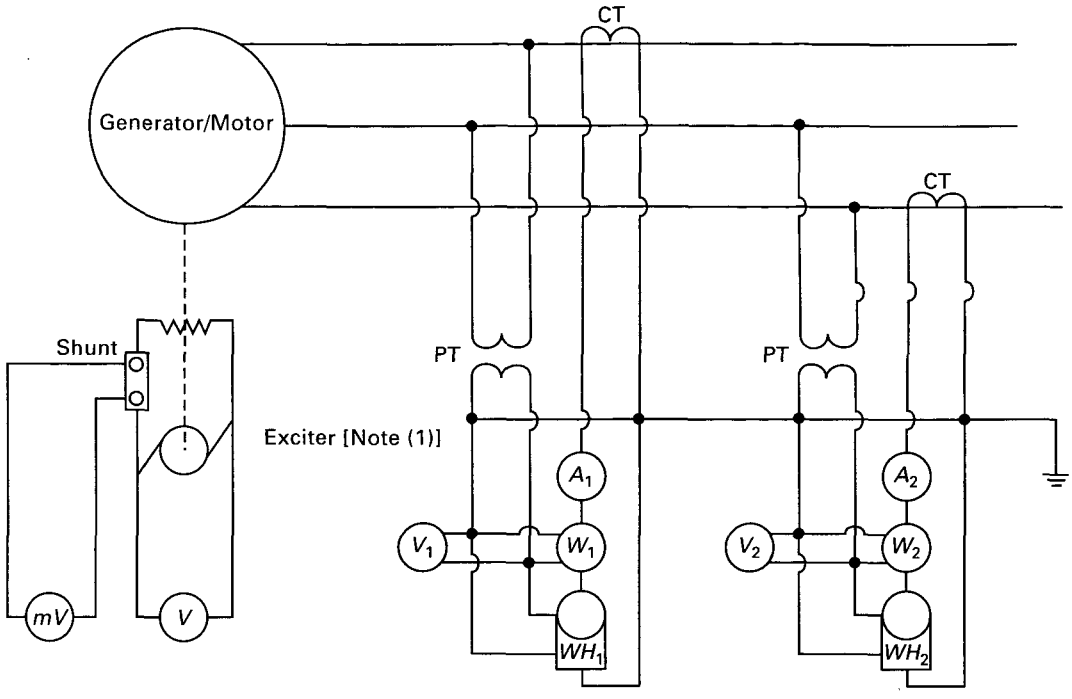

NOTE:
(1) If mechanically connected exciter is used.

Fig. 4D.7.2 Two-Wattmeter Connection Diagram

4D.10

If the power output or input is measured by indicating instruments, the number of readings shall depend upon the duration of the run and the load variations. Sufficient readings shall be taken to give a true average of the output or input during the run, and, in case of the pressure-time method of flow-rate measurement, prior to when the wicket gates or other closing devices begin to close. Simultaneous readings of the wattmeters are recommended. If the power output or input is measured by rotating standard type integrating watt-hour meters, they shall operate simultaneously throughout the period of the run. The duration of operation of the integrating meters shall be measured by timing devices sufficiently accurate to permit the determination of time to an accuracy of at least ±0.2%. The power output or input shall be measured over a period of time which includes the period during which the flow rate is being measured, except in the case of the pressure-time method of flow rate measurement where the power output or input shall be measured immediately prior to when the wicket gates or other closing devices begin to close.

4D.11

Instrument transformers used for the test shall be calibrated prior to installation or immediately prior to the test by comparison with standards acceptable to the Parties to the Test. When existing station (meter class) transformers are used, the burden of the transformer secondary circuits shall be measured with the test instrumentation connected. If the burden of the transformers is exceeded, then station metering circuits may be temporarily disconnected for the duration of the test. The instrument transformers shall be tested to determine the ratio of transformation and the phase angle deviations for secondary burdens, which are equivalent to actual instrument burdens of the instruments to be used during the performance test. The correction data shall be available before the start of testing.

4D.12

All generator or motor friction and windage losses shall be charged to the generator or motor, and all turbine or pump friction losses shall be charged to the turbine or pump. During the generator or motor test, the turbine or pump should be uncoupled from the generator or motor to permit determination of the generator or motor windage and friction.

4D.13

If it is impractical to uncouple the turbine or pump during the generator or motor efficiency test, the approximate value of windage and friction of the machine may be calculated by the following formulas:

Copyright ASME International
Provided by IHS under license with ASME
No reproduction or networking permitted without license from IHS
Not for Resale

(a) Francis Turbine or Centrifugal Pump

$$P = K_f B D^4 n^3$$

where

P = turbine or pump windage and friction turning in air, kW
K_f = empirical constant, the average value of which is 3.8×10^{-2} (1×10^{-4})
B = height of distributor, m (ft)
D = outside diameter of runner, m (ft)
n = speed of rotation, revolutions per second

The above formula was determined from tests on Francis turbine runners and may be used for centrifugal pump-turbine impeller runners rotating in the turbine direction.

(b) Propeller Type Turbine or Pump (including Kaplan)

$$P = K_p(B_t + 0.25\ B_h)^{0.5}\ D^4\ n^3(5 + N_p)$$

where

P = turbine or pump windage and friction turning in air, kW
K_p = empirical constant as determined from a series of tests conducted in the field on both fixed and movable blade propeller turbines. The value found is 1.05×10^{-3} (5×10^{-6}) with fixed and movable blade propeller runners
B_t = distance parallel to the axis of the runner, measured from the inlet edge to the outlet edge of the runner at its outer periphery (tip height), m (ft)
B_h = distance parallel to the axis of the runner, measured from the inlet edge to the outlet edge of the runner blade adjacent to the runner hub (hub height), m (ft)
D = outside diameter of the runner, m (ft)
n = speed of rotation, revolutions per second
N_p = number of runner blades

The windage and friction test should preferably be made with the Kaplan runner blades in the closed or flat position. In both cases (a) and (b), the test to determine the combined windage and friction shall be made under the following conditions:

(1) cooling water supplied to seal rings
(2) wicket gates open
(3) spiral case drained and access door open
(4) draft tube access door open

(c) Impulse Turbine

$$P = K_i\ B\ D^4\ n^3$$

where

P = turbine windage and friction turning in air, kW
K_i = empirical constant, as determined from a series of tests, the average value of which is 8.74×10^{-3} (2.3×10^{-5})
B = width of bucket, m (ft)
D = outside diameter of runner, m (ft)
n = speed of rotation, revolutions per second

4D.14

Other methods of determining windage and friction may be used by prior agreement by the Parties to the Test.

4D.15

Turbine output shall be generator output plus those generator losses supplied directly by the turbine. Pump input shall be motor input less all motor losses. Any power input provided to shaft driven auxiliaries not necessary for normal turbine or pump operation shall be added to the turbine power output and deducted from the motor output. Electrical power input to generator and turbine auxiliaries necessary for normal turbine operation shall be deducted from the measured generator power output plus applicable generator losses to determine net turbine power output. Pump power input shall be measured motor power minus applicable motor losses, plus electrical power input to auxiliaries necessary for normal continuous pump operation. Generator or motor losses obtained by shop tests may be used in this determination if corrected to turbine or pump test conditions and agreed upon by the Parties to the Test.

4D.16

If possible, all auxiliaries driven from the machine being tested shall be disconnected during the test. If the generator or motor is excited from a mechanically connected exciter, the calculated input to the exciter shall be added to the appropriate generator or motor losses in determining the turbine output or pump input. Correction shall be made in the same manner for any other auxiliaries connected either mechanically or electrically.

4D.17

Correction shall also be made for any other auxiliaries necessary for proper operation and related to the performance of the turbine, but not directly connected to it. If compressed air is required for turbine operation at certain wicket gate openings, the compressor motor input or equivalent energy usage shall be deducted from measured generator output.

4D.18

The values of generator or motor windage and friction shall be measured in the shop, or after installation, with special attention to the turbine or pump conditions outlined herein for windage and friction tests (see paras.

Copyright ASME International
Provided by IHS under license with ASME
No reproduction or networking permitted without license from IHS
Not for Resale

4D.12 and 4D.13). In units containing direct connected exciters of sufficient capacity, the windage and friction may be measured by driving the generator with the exciter. Windage and friction, when not directly measurable, shall be taken either from shop tests of generators of similar size and design or, preferably, from a deceleration test made after installation.

4D.19 Direct Method of Power Measurement

The turbine power output or pump input may be determined by a transmission or torsion dynamometer of either the surface strain type or the angular twist type. Such dynamometers shall not be employed for measurements less than 25% of their rated torque.

4D.20

Torsion dynamometers shall be calibrated before the test over the range of ambient temperature expected during the test and should be recalibrated after the test at the temperature experienced. The calibration of the torsion dynamometer shall be conducted with the torsion indicating means in place. Observations of the indicator shall be taken with a series of increasing loadings and then with a series of decreasing loadings, with the precaution that when taking readings with increasing loadings, the loading shall at no time be decreased. Similarly, during the taking of readings with decreasing loadings, the loading shall at no time be increased.

4D.21

The calculation of output shall be based on the average of the increasing and decreasing loadings as determined by the calibration. If the difference in readings between increasing and decreasing loadings exceeds 0.2% of the dynamometer full load rating, the dynamometer shall be deemed unsatisfactory.

4E SPEED MEASUREMENT

4E.1

Accurate measurement of the rotational speed of the turbine is essential when the power output is measured by a direct method such as a transmission dynamometer. However, when the turbine power output is determined by an indirect method such as the measurement of the output of the synchronous generator, the rotational speed can be computed from the system frequency.

4E.2 A-C Interconnected Power Grid

The power systems in nearly all the 48 contiguous states and many of the Provinces of Canada are interconnected for power exchange and frequency control. System frequency is compared to a very high-grade crystal controlled clock. Short-term deviations are recorded and long-term deviations are integrated to zero. The crystal controlled clock is checked by standard time signals transmitted by the United States National Bureau of Standard radio station WWV located at Fort Collins, Colorado, or by telephone.

4E.3

For a turbine or pump test with a synchronous generator or motor connected to an alternating current interconnected grid, the speed is not expected to vary from true interval by more than ±0.02% under normal operating conditions. For a Code test, the actual system frequency must be measured somewhere in the power system and its value recorded.

4E.4 Isolated Alternating Current Systems or Short Term Measurements

Electronic timers and counters are available which can be used in two ways. A crystal controlled time base accurately measures pulses for a period of 1 to 10 sec. During a preset period, the counter integrates the number of cycles or pulses. Alternatively, using the same equipment, time for one cycle is measured. A one-megahertz timing crystal will read 16.667 milliseconds for one cycle. The "hold" time can be set for one second to allow a reading, and then another cycle is sampled automatically.

4E.5 Induction Generators and Motors or Direct Current System

The first choice in this case is a mechanically driven revolution counter using the same electronic equipment as above. A projection on the shaft provides an electrical pulse either by contactor or electromagnetic pickup.

4E.6

The electronic devices mentioned above are provided with an independent crystal oscillator as a time base. The frequency of this crystal shall be checked in the laboratory before the test.

4E.7

Pulse generating wheels must be solidly connected to the unit shaft. Tachometer generators shall be driven by a mechanical connection such as a flexible shaft. Friction or belt drives shall not be used.

4F TIME MEASUREMENT

4F.1

The most accurate measurement and portable time base available at present is a crystal-controlled oscillator. All manufacturers of crystal oscillators offer crystal

Copyright ASME International
Provided by IHS under license with ASME
No reproduction or networking permitted without license from IHS
Not for Resale

oscillators that are temperature-compensated. Typically, temperature-compensation ranges (0°C - 50°C) encompass what is normally found in ambient temperatures. Uncertainties vary from one part per million for a crystal that is temperature compensated, to 300 parts per million when not temperature compensated. Crystal controlled oscillators shall be checked for stability and drift. Oscillators used in field-testing applications should be temperature compensated. They shall be operated according to the manufacturer's instructions.

4G RELATIVE FLOW MEASUREMENT — INDEX TEST

4G.1

An index test is a relative flow measurement method that can be used to obtain the most efficient wicket gate/blade angle relation for adjustable blade turbines. Index tests can also be used in assessing the effect of modifications or repairs, measuring efficiency change with wear and obtaining the relative overall efficiency of units with the object of knowing how to operate them with optimum utilization of flow. Index tests are useful for checking the shape of efficiency curves of all types of machines, and demonstrating whether the prototype efficiency curve has the shape expected from the test of the homologous model. An index test shall comply with all the relevant test provisions given in other sections of this Code except as modified by the following paragraphs.

4G.2 Definitions

An index test determines the relative flow rate or relative efficiency of a machine. An index value is an arbitrarily scaled measure. Relative values are derived from the index values by expressing them as a proportion of the index value at a stipulated condition. Output and head are measured by any of the methods in this Code. Flow rate is measured as an index value by an uncalibrated device, which serves as a flowmeter. Relative efficiency is expressed as a proportion of peak index efficiency.

4G.3 Application

An index test may be used alone, or as part of a performance test, for any of the following purposes:

(a) to determine relative flow and efficiency in conjunction with turbine output or pump input. Such performance characteristics may be compared with the performance predicted from tests on a homologous model.

(b) to determine the overall operating point or points which define the most efficient operation, or to extend information on performance over a wider range of net head, flow rate or output than covered by performance tests.

(c) to determine the relationship between runner blade angle and wicket gate opening for most efficient operation of adjustable blade turbines and for the purpose of calibrating the blade control cam.

(d) to determine the optimum relative efficiency wicket gate opening at various heads for pump operation.

(e) to assess the change in efficiency due to cavitation resulting from a change in lower pool level and/or net head

(f) to monitor flow rate data during the performance test. This is particularly useful where the performance test method is one in which errors may change with flow or at operating points other than peak efficiency.

(g) to obtain calibration data for permanent powerhouse flow measuring instruments by assuming an absolute value of machine efficiency at some operating point

(h) to assess the change in efficiency of the machine resulting from wear, repair, or modification. The pressure taps and the surrounding area shall be in the same condition as for the previous test in order to obtain reliable results.

When an index test is used to supplement results of a performance test, measurements of flow rate made for the performance test are used to calibrate the index of flow. The index test results may then be expressed in terms of efficiency rather than relative efficiency. In this case, the results should include a statement concerning the accuracy and confidence limits, which apply to the calibration of flow rate measurement. For some applications, the index test may be used to obtain the overall relative efficiency of the turbine-generator or pump-motor generating unit in preference to the relative efficiency of the machine.

4G.4 Relative Flow Rate

An index test does not require any absolute measurement of flow rate. For the determination of relative flow rate, one of the following methods shall be used:

(a) Measurement of the pressure differences existing between suitably located taps on the turbine spiral case. This is the Winter-Kennedy Method, described in ASCE paper, "Improved Type of Flow Meter for Hydraulic Turbines" by I. A. Winter (April 1933). This method is not suitable for relative flow measurement for pump operation. Flow rate is taken as proportional to the nth exponent of the differential pressure head [i.e., Q_{rel} = k (differential pressure)^n]. An approximate value of exponent n is 0.5. However, the value of the exponent may vary with the type of spiral case, the location of the taps, and the flow rate. When an index test is part of the performance test, the value of n can be determined from measurements of flow rate made for the performance test (see para. 4G.6 and Fig. 4G.4).

(b) Measurement of the pressure difference across a converging taper section of the penstock using the principle of a Venturi. This method is reliable, provided a

Copyright ASME International
Provided by IHS under license with ASME
No reproduction or networking permitted without license from IHS Not for Resale

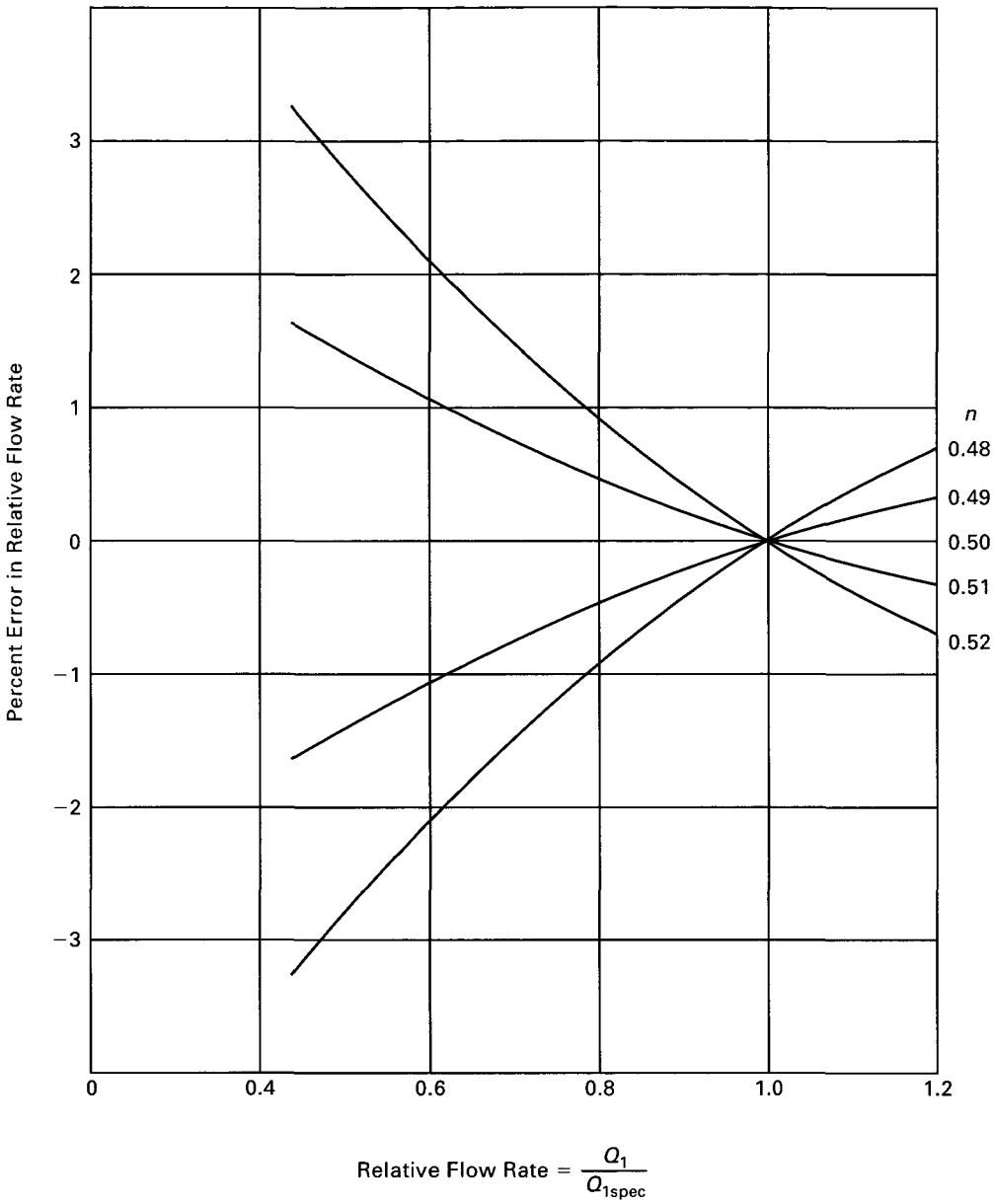

GENERAL NOTE:
$Q_1 = k\Delta h^n$
Where h is the differential pressure across the taps. The error is that arising from assuming $n = 0.50$ when the true value can be, for instance, 0.48 or 0.52.

Fig. 4G.4 Effect of Variations in Exponent on Relative Flow Rate

suitable convergence exists to give a pressure difference large enough to be measured accurately (see para. 4G.9).

(c) Measurement of the difference between the elevation of water in the inlet pool and the inlet section of the machine (see para. 4G.10).

(d) Measurement of differential pressure between two piezometers located on a conduit elbow (see para. 4G.11).

4G.5

Differential pressure measurements should not be made at turbine discharge sections, low pressure pump intake sections or other sections where pressure variations are high in comparison with the total differential pressure, as the accuracy of the relative flow rate measurement will be significantly diminished.

Copyright ASME International
Provided by IHS under license with ASME
No reproduction or networking permitted without license from IHS
Not for Resale

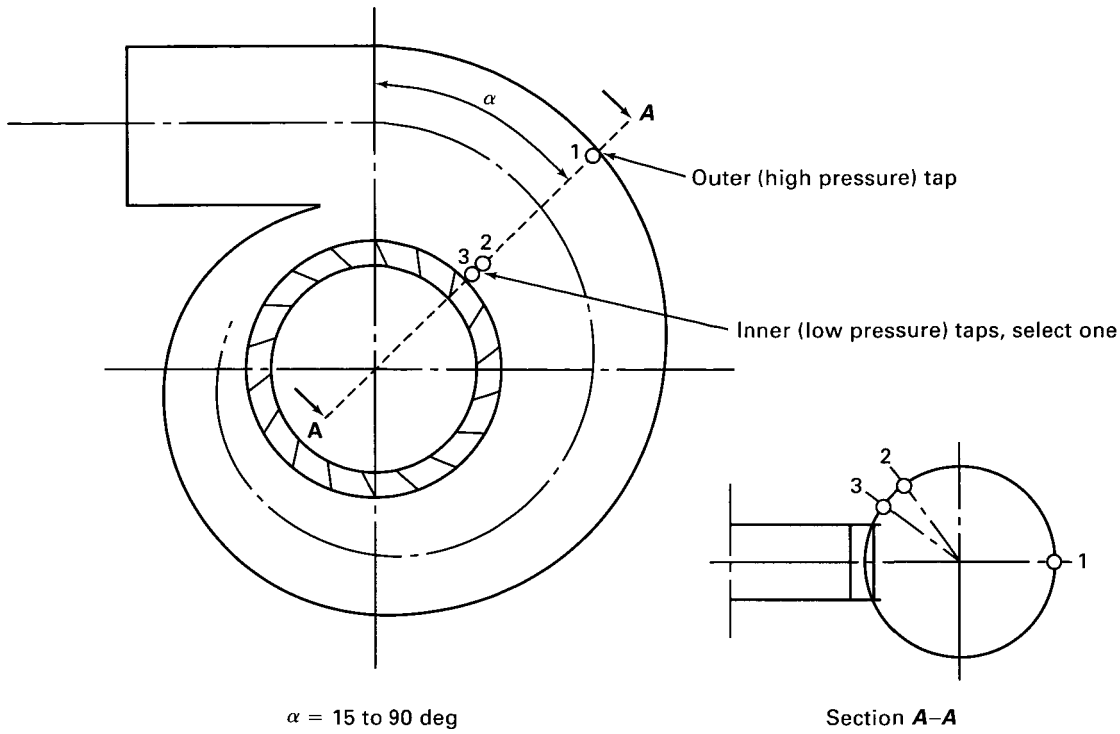

Fig. 4G.8.1 Location of Winter-Kennedy Pressure Taps in Spiral Case

4G.6

The Winter-Kennedy and converging taper methods of obtaining relative flow rate shall not be used for flow rates less than half the maximum flow rate.

4G.7

Measurement of the needle stroke may be used on impulse turbines to determine an index of flow rate provided the needle stroke-vs-discharge characteristic shape has been checked by tests on a homologous model of the turbine. Care shall be taken to assure that the needle, nozzle, and support vanes are clean and in good order during the test and are indeed homologous with the model.

4G.8 Relative Flow Rate Measurement by the Winter-Kennedy Method

The Winter-Kennedy method requires two pressure taps usually located in the same radial section of the spiral case. See Figs. 4G.8.1 and 4G.8.2. One tap is located at the outer radius of the spiral or semi-spiral case, often on the horizontal centerline. The other tap is located at an inner radius outside the stay ring. Sometimes more than one tap is provided at the inner radius. The taps shall not be near rough weld joints or abrupt changes in spiral case section. The inner taps shall lie on a flow line between stay vanes.

The relative flow rate through the machine shall be taken as a linear function of the square root of the differential pressure existing between outer and inner pressure taps, unless calibration against an absolute flow measurement indicates that a different exponent of differential pressure will give more accurate results.

4G.9 Relative Flow Measurement by the Converging Taper Method

Two pressure taps shall be located at different size cross sections of the conduit. The most stable pressure difference will be obtained if both taps are in the converging section of the conduit. However, the differential pressure thus obtained is not the maximum possible, and for this reason it may be preferable to locate one tap a short distance upstream of the convergence and the second not less than half a diameter downstream of the convergence as shown on Fig. 4G.9.

4G.10 Relative Flow Rate by the Friction Head Loss and Velocity Head Method

The difference between the elevation of the water in the inlet pool (upper pool for turbine and lower pool for pump), and the pressure head near the entrance to the machine, may be used to measure the relative flow rate. The differential reading consists of the friction head and other head losses between the inlet pool and the section at the point of measurement near the entrance

Copyright ASME International
Provided by IHS under license with ASME
No reproduction or networking permitted without license from IHS
Not for Resale

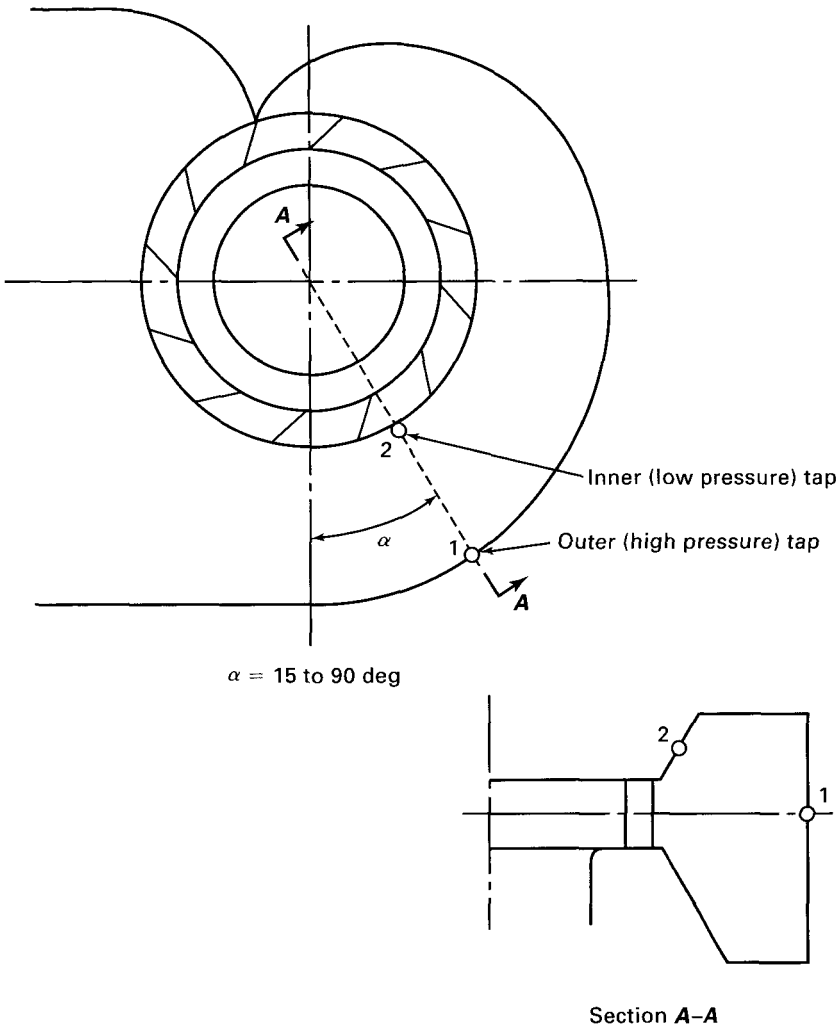

Fig. 4G.8.2 Location of Winter-Kennedy Pressure Taps in Semi-Spiral Case

to the machine plus the velocity head at this section.

Attention should be given to the trash rack to insure that the head loss through the trash rack is not affected by an accumulation of trash during the test.

For pumps, the section near the entrance to the machine shall be selected so that the proximity to the runner is not causing rotational flow, which can influence the pressure head reading.

At installations with long high-pressure conduit, relative flow for pumps can be measured on the discharge conduit, provided that the measuring section on the high-pressure side of the pump is selected so that rotational flow from the pump discharge is not influencing the pressure head reading. Often the net head taps on the pump inlet conduit (draft tube on a pump-turbine) versus tap(s) near the runner can be used.

If more than one machine is connected to the same conduit, the machine(s) other than the one under test shall be shut down, and the leakage through the wicket gates or shutoff valves of the other turbine(s) shall be measured, calculated, or estimated.

4G.11 Relative Flow Measurement as a Differential Across an Elbow

The differential pressure readings between two piezometers located on a penstock elbow may be used to determine relative flow rate. The flow rate shall be taken as a straight-line function of the square root of the differential readings.

4G.12 Pressure Taps and Piping

The pressure taps shall comply with the dimensional requirements of para. 4B.11. Since the differential heads to be measured may be small, special attention shall be given to removing surface irregularities.

4G.13

Piping which slopes upward from the pressure tap to the gage is normally used because it is easily purged.

Copyright ASME International
Provided by IHS under license with ASME
No reproduction or networking permitted without license from IHS
Not for Resale

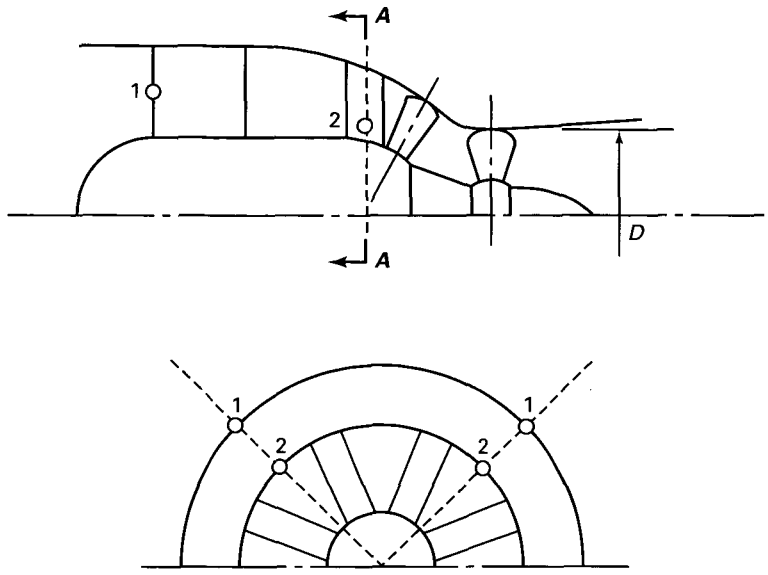

Section *A–A*

GENERAL NOTE: Tap 2 is located midway between stay vanes and halfway along the channel formed by the vanes or approximately 0.6 to 0.7D upstream of the runner centerline. Tap 1 is located on the same radial plane as Tap 2.

Fig. 4G.9 Location of Differential Pressure Taps in Bulb Turbine or Converging Taper Penstock

After prolonged use, upward sloping pipe may gradually accumulate air and require frequent purging. For this reason, where the pressure taps are to be used for a permanently operated flow recorder or gage, it may be preferable to slope the pipe downward from the pressure tap to the gage or flow recorder.

4G.14 Head and Differential Pressure Measurement

The head on the machine shall be measured using the methods given in paras. 4B.1 through 4B.14. In order to determine the net head on the machine, it is necessary to calculate velocity heads. Since only relative flow is determined, velocity heads can only be estimated. This may be done by assuming a value of turbine efficiency, usually the peak value, and thus estimate flow rate. The possible error introduced if the assumed efficiency is incorrect is negligible in the final determination of relative efficiency.

4G.15

Differential pressure shall be measured using a gage selected to give accurate measurements over the expected range. The differentials may be measured with micro-manometers, air-water manometers, differential pressure transducers, and point or hook gages installed in suitable stilling wells. The Winter-Kennedy method, using taps located in accordance with this Code, typically gives pressure differences ranging from 1 m to 6 m (3 ft to 20 ft) of water at maximum flow rate. For the higher differential pressures, mercury-water manometers or differential pressure transducers may be used.

4G.16 Effect of Variation in Exponent

Relative flow rate measurement using Winter-Kennedy taps, or differential pressure taps on tubular turbines, bulb turbines and converging taper sections, do not always give results in which flow rate is exactly proportional to the 0.5 exponent of the differential pressure. The extreme values of the exponents that may be expected are 0.48 to 0.52. For spiral cases where the satisfactory location of Winter-Kennedy taps has been demonstrated on model tests, the exponents will be between 0.49 and 0.51.

The effects of variation in exponent n, in the relationship $Q = k\,(\text{differential pressure})^n$, on relative flow rate are shown on Fig. 4G.4. A change in exponent n rotates the relative efficiency curve, whereas a change of the coefficient k changes the shape of the curve. The two effects can often be separated.

The use of two independent pairs of Winter-Kennedy taps may provide a greater level of confidence in using

Copyright ASME International
Provided by IHS under license with ASME
No reproduction or networking permitted without license from IHS
Not for Resale

the assumed exponent of 0.5. It is unlikely that two independent pairs of taps would each show the same departure from the exponent 0.5. Agreement in indicated flow rate Q_i, within ±0.5% over the range of $Q_{rel} = 0.5$ to $Q_{rel} = 1$, can be taken as confirmation of the correctness of the 0.5 exponent.

4G.17 Output

The output of the turbine or of the unit shall be determined by the indirect or direct method, in accordance with subsection 4D. It is also possible to use the control board instruments, but with less accuracy.

4G.18 Wicket Gate and Needle Opening and Blade Angle

The wicket gate or needle opening and the blade angle, if not fixed, shall be recorded for each run. Attention shall be given to the accurate calibration of wicket gate opening against an external scale. The calibration shall include a check that differences between individual wicket gate openings are not significant. The wicket gates could be fully closed before the operating servomotors are fully closed, so that servomotor stroke cannot be used as a measure of wicket gate opening without proper calibration. It is preferable to calibrate wicket gate opening against a measurement of the wicket gate lever angle made with the turbine unwatered.

Copyright ASME International
Provided by IHS under license with ASME
No reproduction or networking permitted without license from IHS
Not for Resale

SECTION 5
COMPUTATION OF RESULTS

5.1 Measured Values

5.1.1 The averages of the readings or recordings with appropriate calibrations and/or corrections for each run shall be used for the computation of results. Any reading suspected of being in error shall be tested by the criteria for outlier in Mandatory Appendix II. Preliminary computations (para. 3.20) made during the course of the test, together with plots of important measured quantities versus wicket gate servomotor stroke, are useful for indicating errors, omissions, and irregularities, and shall appear in the final report as a reference.

5.1.2 Before disconnecting any instruments, all test logs and records shall be completed and assembled, and then critically examined, to detect and correct or eliminate irregularities. It should be determined also at that time whether or not the limits of permissible deviations (para. 3.23) from specified operating conditions, and/or the limits of permissible fluctuations (para. 3.22), have been exceeded.

5.1.3 Prompt examination of readings may indicate the need for inspection and adjustment of the machine or of test instrumentation, thereby minimizing the number of runs that may have to be voided and repeated.

5.1.4 The averages of all readings shall be corrected, using the average of the pre-test and post-test calibration curves for each instrument.

5.2 Conversion of Test Results to Specified Conditions

5.2.1 Turbine Mode. When the readings indicate that test conditions have complied with the requirements of paras. 3.22 and 3.23(a), the measured flow rate (Q_T) and turbine power output (P_T) at head (H_T) shall be converted to the values for specified head (H_{spec}) by:

$$Q \text{ at } H_{spec} = Q_T \left(\frac{H_{spec}}{H_T}\right)^{0.5}$$

$$P \text{ at } H_{spec} = P_T \left(\frac{H_{spec}}{H_T}\right)^{1.5}$$

5.2.2 When the test conditions have complied with the provisions of para. 5.2.1, the turbine efficiency, which requires no correction, is

$$\eta = \frac{\text{turbine output (P)}}{\text{turbine input } (P_W)} = \frac{1000P}{\rho g Q H_{spec}} = \frac{1000\ P_T}{\rho g Q_T H_T}$$

or, when using U.S. Customary units, is

$$\eta = \frac{550P}{\rho g Q H_{spec}}$$

Values of ρ and g are given in Tables 2.4D and 2.4B, respectively.

5.2.3 When the test conditions have complied with the provisions of paras. 3.22 and 3.23(b), but not with para. 3.23(a), the values of Q for H_{spec} and P for H_{spec} as calculated in para. 5.2.1 shall be corrected to Q' and P', respectively, by multiplicative factors derived from known characteristic curves of a previously tested homologous turbine, by following steps (a), (b), and (c) below.

(a) For each run, the following is calculated:

$$k_{uT} = \frac{\pi n_T D}{60(2gH_T)^{0.5}} = \text{speed coefficent}$$

$$q_T = Q_T \frac{1}{D^2 H_T^{0.5}} = \text{unit flow rate}$$

$$p_T = P_T \frac{1}{D^2 H_T^{1.5}} = \text{unit power output}$$

where D equals runner diameter, and "unit" means rationalized to 1 m diameter, 1 m head (1 ft diameter, 1 ft head).

(b) Using the above referenced test curves determine:

q' = unit flow rate at specified head and speed coefficient (k_{u-spec}) for the gate opening that produces q_T at k_{uT}

p' = unit power at specified head and speed coefficient (k_{u-spec}) for the gate opening that produces q_T at k_{uT}

$$\text{where } ku_{spec} = \frac{\pi n_{spec} D}{60(2gH_{spec})^{0.5}}$$

(c) Calculate flow rate and power at specified head.

$$Q' = Q_T \left(\frac{q'}{q_T}\right)\left(\frac{H_{spec}}{H_T}\right)^{0.5}$$

$$P' = P_T \left(\frac{p'}{p_T}\right)\left(\frac{H_{spec}}{H_T}\right)^{1.5}$$

Copyright ASME International
Provided by IHS under license with ASME
No reproduction or networking permitted without license from IHS
Not for Resale

5.2.4 When the test conditions comply with the provisions of para. 5.2.3, the corrected values, Q' and P', at H_{spec} shall be used to calculate the efficiency at each test run:

$$\eta' = \frac{1000P'}{\rho g Q' H_{spec}}$$

or, when using U.S. customary units, is:

$$\eta' = \frac{550P'}{\rho g Q H_{spec}}$$

5.2.5 A curve of efficiency as a function of power shall be plotted.

5.2.6 Pump Mode. Assuming that the measured values indicate that test conditions have complied with the requirements of paras. 3.22 and 3.23(a), the calculated test results shall be converted to the specified speed (n_{spec}) by using the following equations:

$$Q \text{ at } n_{spec} = Q_T \frac{n_{spec}}{n_T}$$

$$H \text{ at } n_{spec} = H_T \left(\frac{n_{spec}}{n_T}\right)^2$$

$$NPSH \text{ at } n_{spec} = NPSH_T \left(\frac{n_{spec}}{n_T}\right)^2$$

$$P \text{ at } n_{spec} = P_T \left(\frac{n_{spec}}{n_T}\right)^3$$

Where the test conditions have complied with the provisions of para. 3.23(a), the machine efficiency (η), which requires no correction for these conversions, is given by:

$$\eta = \frac{\rho g Q H}{1000\ P}$$

or, when using U.S. customary units, by

$$\eta = \frac{\rho g Q H}{550 P}$$

Where the test conditions have complied with the provisions of para. 3.23(b) but not with those of para. 3.23(a), the values of Q at n_{spec}, H at n_{spec}, and P at n_{spec} shall be adjusted by the addition (or subtraction) of incremental values ΔQ, ΔH, and ΔP, respectively, derived by reference to characteristic curve of previously tested homologous machine.

The machine efficiency η using the corrected values of $Q' = Q + \Delta Q$ at n_{spec}, $H' = H + \Delta H$ at n_{spec}, and $P' = P + \Delta P$ at n_{spec}, is given by:

$$\eta' = \frac{\rho g Q' H'}{1000\ P'}$$

or when using U.S. customary units, by

$$\eta' = \frac{\rho g Q' H'}{550 P'}$$

Values of ρ and g are given in Tables 2.4D and 2.4B, respectively.

5.2.7

A curve of efficiency as a function of flow rate shall be plotted.

5.3 Computation of Turbine Index Test Results

5.3.1 The test data shall provide, for each test point, values for the flow tap differential pressure Δh, pressure heads (h_1, h_2) and potential heads (Z_1, Z_2,), turbine power output P, wicket gate opening (needle stroke for impulse turbines), and blade position in the case of adjustable blade turbines. Plots of power output, gross head and differential pressure versus wicket gate opening or needle stroke are useful for indicating errors, omissions, and irregularities. For adjustable blade turbines, a plot of $P_e/[(\Delta h)^{0.5}(H)]$ vs P_e is helpful for determining the maximum efficiency point for each combination of blade angle and wicket gate opening tested.

5.3.2 Relative flow rates, using the Winter-Kennedy, converging taper or other appropriate methods are given by

$$Q_r = k(\Delta h)^n$$

where:

Q_r = relative flow rate
Δh = differential pressure head
k = coefficient
n = exponent

When differential pressure heads are taken during tests, and flow rate is also measured by a Code-approved method, these flow rates should be used to evaluate k and n. The recommended procedure is to fit a power curve equation to the test points by the least squares method. The form of the equation is:

$$Q = k(\Delta h)^n$$

where:

Q = flow rate from Code-approved measurement method

5.3.3 If measurements of flow rate by a Code-approved method are unavailable, then the value of the exponent n is assumed to be 0.5, and k is determined from an estimate of maximum turbine efficiency at the test head. The corresponding flow rate Q is then as follows:

$$Q = \frac{1000\ P}{\eta \rho g H} (m^3/s)$$

Copyright ASME International
Provided by IHS under license with ASME
No reproduction or networking permitted without license from IHS
Not for Resale

or, when using U.S. customary units,

$$Q = \frac{550\ P}{\eta \rho g H}(ft^3/s)$$

and

$$k = \frac{Q_r}{(\Delta h)^{0.5}}$$

where η is the estimated maximum turbine efficiency obtained from tests of a homologous model. Maximum turbine model efficiency at the speed coefficient k_u corresponding to prototype test head and speed, and corrected by a suitable scaling factor shall be used to estimate flow rate.

Determination of net turbine head H in the above equation for flow rate requires that a trial value of Q_r or k be used initially. If trial values of Q_r or k differ from final values by more than ±0.1 percent, new trial values shall be selected and the calculation repeated.

After k and n have been satisfactorily determined, further computation of results shall be carried out as described in paras. 5.2.1 through 5.2.4.

5.3.4 The curves of relative flow rate and relative efficiency versus turbine power output should be compared with the expected curves based on model test data to indicate the nature of any discrepancy between expected and prototype relative efficiency obtained from the test.

5.4 Evaluation of Errors

Regardless of the excellence of the test, there will always be an uncertainty in the result. The uncertainty of the final results and all intermediate results shall be estimated using the general procedures described in Appendix I, which is a summary of the more complete treatment given in PTC 19.1-1998, Test Uncertainty.

5.5 Assessment of Turbine Index Test Errors

5.5.1 Systematic errors in head or output measurement, which are constant percentage errors, although unknown in magnitude, do not affect the results of an index test unless comparative results are required. The largest systematic error which can affect index test results arises from possible variation of the exponent in the equation relating relative flow to differential pressure head. The effect of such variation is given in Fig. 4G.4.

5.5.2 Random errors affect the results of an index test. A sufficient number of test points shall be made in accordance with the procedures set out in Mandatory Appendix I to result in an overall uncertainty for the smoothed results due to random errors not to exceed ±0.5% at 95% confidence limits. If the test conditions are such that this accuracy cannot be obtained, then the test report shall state what accuracy has been achieved and any comparison with performance, predicted from model tests shall make an allowance for such inaccuracy.

5.6 Comparison with Guarantees

5.6.1 Turbines are usually guaranteed for power output and efficiency at one or more specified net heads. Efficiency may be guaranteed at one or more specified power outputs or wicket gate or needle openings. All guarantees are at the specified synchronous speed unless otherwise stated.

5.6.2 Pumps are usually guaranteed for flow rate and efficiency at one or more specified heads. Efficiency may be guaranteed at one or more flow rates. All guarantees are at specified speed unless stated otherwise.

5.6.3 When the head varies during the test, the values of efficiency and power output or flow for several heads may be determined. In such instances, a mean curve of guaranteed efficiency for comparison with the test curve of efficiencies at mean head can be determined by interpolation.

5.6.4 Test results shall be reported as actual computed values, corrected for instrument calibrations and converted to specified conditions. A statement shall be included in the test report that results are estimated to have a plus or minus percentage uncertainty, as determined by evaluation of uncertainties described in Appendix I.

5.6.5 Application of Uncertainties The application of uncertainties to adjust test results or guarantee is specifically not permitted by Performance Test Codes because the test results themselves provide the best indication of actual performance. The test results shall be reported as calculated from test observations, corrected for instrument calibration and test deviations from design conditions but with no other corrections.

Copyright ASME International
Provided by IHS under license with ASME
No reproduction or networking permitted without license from IHS
Not for Resale

SECTION 6
REPORT OF RESULTS

6.1

The Chief of Test (see para. 3.6) shall be responsible for preparation of the final report and shall sign the report.

6.2

The Parties to the Test shall receive copies of the draft and final report. For acceptance tests, the report shall include:

(a) A brief summary of the purpose of the tests, the principal results, and conclusions.

(b) Description of special conditions or pre-test agreements.

(c) Identification of the Parties to the Test and a list of the key personnel taking part in the test, including their organizational affiliations.

(d) A summary of the specified operating conditions and guarantees.

(e) Descriptions, drawings and/or photographs of the machine under test, the plant layout, inlet conditions, and outlet conditions, including any unusual features which may influence test results.

(f) The names of manufacturers and nameplate data listing power, flow rate, speed, and head.

(g) Description of the inspected water passages, pressure taps, and underwater components.

(h) Description of the test equipment and test procedures, including the arrangement of the equipment, and list of instruments. Instrumentation descriptions should include manufacturer, key specifications, manufacturer's stated accuracy, identifying number or tag, owner, length and type of electrical leads (where relevant), calibration curves and certificates of calibration.

(i) Log of test events.

(j) Tabulations or summaries of all measurements and uncorrected readings.

(k) Methods of calculation for all quantities computed from the raw data.

(l) Corrections for deviations from specified conditions.

(m) Statement regarding cavitation values observed during the tests.

(n) Analysis of the uncertainty of the test results.

(o) Summary of results.

(p) Tabular and graphical presentation of the final test results.

For turbines, the graphical presentation should include

(1) Efficiency versus power output

(2) Flow rate versus power output.

(3) Power output versus wicket gate opening or needle position and blade angle where applicable.

(4) Flow rate versus wicket gate opening or needle position and blade angle where applicable.

For pumps, the graphical presentation should include:

(5) Head versus flow rate.

(6) Flow rate versus power input.

(7) Efficiency versus flow rate.

(8) Efficiency versus wicket gate opening.

(q) Appendices as required to describe details of dimensions of water passageways, additional drawings and illustrations as needed for clarification, and any other supporting documentation which may be required to make the report a complete self-contained document of the entire test.

(r) Documentation of any unresolved disagreements between the Parties to the Test.

Copyright ASME International
Provided by IHS under license with ASME
No reproduction or networking permitted without license from IHS
Not for Resale

Copyright ASME International
Provided by IHS under license with ASME
No reproduction or networking permitted without license from IHS
Not for Resale

MANDATORY APPENDIX I
UNCERTAINTY ANALYSIS

I-1 BASIS FOR UNCERTAINTY CALCULATION

All tests regardless of the care taken in design and implementation will yield measurements and results that are different from the true values, which would have been determined with perfect measurements. This results in some degree of uncertainty as to what the true or exact result is. The objective of the uncertainty analysis is to rationally determine this uncertainty in the required test result (e.g., machine efficiency).

The uncertainty analysis methodology summarized here follows the general principles in PTC 19.1-1998 Test Uncertainty. That document should be consulted for more details on the application of the method and for definitions of basic concepts. The basis for this method is the root-sum-square (RSS) approach to combining the various uncertainties identified in the measurement. Uncertainties for this Code are computed at the 95% confidence level. The RSS approach preserves this confidence interval, assuming normally-distributed independent measurements. The summary presented here applies only to the case in which the various uncertainties can be considered independent of one another. PTC 19.1-1998 should be consulted if there is any question as to the applicability of this assumption.

I-2 SUMMARY OF METHODOLOGY

The methodology presented here uses turbine mode as an example. The resulting equations for overall uncertainty are the same for both pump and turbine mode and the methodology presented here applies to both.

Turbine efficiency (in SI units) is defined as

$$\eta_T = \frac{1000\ P_T}{\rho g Q_T H_T}$$

The uncertainty in the measured efficiency will therefore be a function of the uncertainty in the measurements of power, flow, and net head (water density and gravity also enter into this equation but uncertainties in these quantities are usually quite small and they are neglected in this discussion). Each of these measurements will, in general, depend upon the results of measurements of several other parameters. For instance, net head will depend upon both the static and velocity heads at the inlet and the discharge. Consequently, it will depend on the measurements of flow rate, conduit area, inlet pressure, discharge pressure, etc.

For an individual parameter, the uncertainty in the measurement is determined by a combination of systematic errors, which are generally due to uncertainty in instrumentation calibrations, and random errors, which generally arise from variations in the quantity being measured or noise in the measurement system. The overall uncertainty U_X in the measured value of a parameter X is given by

$$U_X = \sqrt{B_{X1}^2 + \left(tS_{\bar{X}}^2\right)}$$

where

B_X = systematic uncertainty in parameter X
$S_{\bar{X}}$ = Standard deviation of the sample mean of parameter X (defined below)
t = Student's t-statistic for adjusting to 95% confidence interval (see Table I-1)

t may be computed from the following empirical equation for other values of ν.

$$t = 1.96 + \frac{2.36}{\nu} + \frac{3.2}{\nu^2} + \frac{5.2}{\nu^{3.84}}$$

The standard deviation of the sample mean, $S_{\bar{X}}$ is computed from the standard deviation of a series of individual measurements of the parameter X by

$$S_{\bar{X}} = S_X / \sqrt{N}$$

where

S_X = the standard deviation of a set of measurements of a parameter X (defined below)
N = the number of measurements in the sample

The standard deviation of a set of measurements of parameter X is given by

$$S_X = \left[\frac{1}{N-1}\sum_{i=1}^{N}(X_i - \bar{X})^2\right]^{1/2}$$

where $\bar{X}$ is the average of the measurements.

Individual (elemental) systematic and random uncertainties are combined by the RSS method:

$$B_X = \sqrt{B_{X1}^2 + B_{X2}^2 + \ldots + B_{XK}^2}$$

and

$$S_{\bar{X}} = \sqrt{(tS)_{\bar{X}1}^2 + (tS)_{\bar{X}2}^2 + \ldots + (tS)_{\bar{X}K}^2}$$

Copyright ASME International
Provided by IHS under license with ASME
No reproduction or networking permitted without license from IHS
Not for Resale

Table I-1 Two-Tailed Student *t* Table for the 95% Confidence Level

Degrees of Freedom $\nu = n - 1$	t	Degrees of Freedom	t
1	12.706	16	2.120
2	4.303	17	2.110
3	3.182	18	2.101
4	2.776	19	2.093
5	2.571	20	2.086
6	2.447	21	2.080
7	2.365	22	2.074
8	2.306	23	2.069
9	2.262	24	2.064
10	2.228	25	2.060
11	2.201	26	2.056
12	2.179	27	2.052
13	2.160	28	2.048
14	2.145	29	2.045
15	2.131	30	2.042

where the B_{Xi} and the $tS_{\overline{X}i}$ are the elemental systematic and random uncertainties, respectively.

As a practical matter, it is worth noting that the final result of an uncertainty calculation does not depend on the order in which the combining of the elemental error is performed. In other words, under the RSS method, the same result is obtained if all the systematic and all the random errors are computed separately and then combined, if the systematic and random errors for an individual measurement are computed and combined, and then the measurement errors are combined over all measurements, or if all the elemental systematic and random errors are combined in one step. However, it may be useful to determine the overall systematic and random uncertainties separately, as this may give insight as to the most likely areas for improvement in test uncertainty.

The following discussion assumes that the overall systematic and random errors in the efficiency calculation are to be reported as relative (e.g., percentage) values.

The relative sensitivity of a result r computed from measured parameters due to changes in a particular parameter P is given by using a Taylor series approximation to define a sensitivity coefficient for the parameter, θ_i':

$$\theta_i' = \frac{\partial r / r}{\partial P_i / P_i}$$

This equation simply quantifies the relative change in the computed result r, which would result from a relative change in the measured parameter P.

The relative random and systematic uncertainties of a result r computed from the statistics of the total number of parameters (J) upon which the result is based are then given by

$$\frac{S_r}{r} = \left[\sum_{i=1}^{J}\left(\frac{\theta_i' S_{\overline{P}_i}}{\overline{P}_i}\right)^2\right]^{1/2}$$

and

$$\frac{B_r}{r} = \left[\sum_{i=1}^{J}\left(\frac{\theta_i' B_{\overline{P}_i}}{\overline{P}_i}\right)^2\right]^{1/2}$$

Because the three test quantities of power, flow, and head enter into the equation for the final result of efficiency as the product of first powers, the uncertainty in the efficiency, based on a Taylor series propagation of parametric uncertainties into the final result, takes on a simple form involving the parameter uncertainties:

$$U_\eta = \left[\left(\frac{\delta P}{P}\right)^2 + \left(\frac{\delta Q}{Q}\right)^2 + \left(\frac{\delta H}{H}\right)^2\right]^{1/2}$$

$$= \left[U_P^2 + U_Q^2 + U_H^2\right]^{1/2}$$

where

U_η = relative uncertainty in the turbine efficiency
U_P = relative uncertainty in the turbine power output measurement
U_Q = relative uncertainty in the flow rate measurement
U_H = relative uncertainty in the net head measurement
δ = absolute uncertainty in the indicated parameter

Several other useful specific forms derived from the Taylor series method for propagation of uncertainties into results for the special case of independent uncertainties are given below.

I-2.1 Average of Two or More Parameters

If a result is computed as an average of two parameters

$$r = \tfrac{1}{2}(x + y)$$

then the uncertainty in the result is given by

$$U_r = \tfrac{1}{2}(U_X^2 + U_Y^2)^{1/2}$$

Averages for more than two parameters can be computed in similar fashion. For instance, if three parameters are averaged to determine a result, then the uncertainty in the result is given by

$$U_r = \tfrac{1}{3}(U_1^2 + U_2^2 + U_3^2)^{1/2}$$

Copyright ASME International
Provided by IHS under license with ASME
No reproduction or networking permitted without license from IHS
Not for Resale

This combining of uncertainties for a result computed from an average will be referred to as *RSS-averaging of the uncertainties* in this Appendix.

Note that if the elemental uncertainties U_i are equal (for instance, in the measurement of flow rate in three intake bays of a Kaplan unit), the RSS-average of three uncertainties is given by

$$U_r = \frac{U}{\sqrt{3}}$$

where $U_1 = U_2 = U_3 = U$. A similar result obtains for any number of averaged parameters.

I-2.2 Sum or Difference of Two or More Parameters

If a result is computed as the sum or difference of two parameters

$$r = x \pm y$$

then the uncertainty in the result is given by

$$U_r = (U_X^2 + U_Y^2)^{1/2}$$

Sum or differences of more than two parameters can be computed in similar fashion. For instance, if three parameters are summed to determine a result, then the uncertainty in the result is given by

$$U_r = (U_1^2 + U_2^2 + U_3^2)^{1/2}$$

Note that if the elemental uncertainties U_i are equal, the RSS-sum of three uncertainties is given by

$$U_r = \sqrt{3}U$$

where $U_1 = U_2 = U_3 = U$. A similar result obtains for any number of summed parameters.

I-3 APPLICATION OF UNCERTAINTY ANALYSIS OVER A RANGE OF OPERATING CONDITIONS

Measurements (e.g., power output) or determinations of results (e.g., turbine efficiency) of parameters over a range of operating conditions may be expected to follow a smooth curve. For instance, turbine efficiency (the dependent parameter) may be expected to be a smooth function of the power output (the independent parameter) for a given head. However, test measurements or results will deviate from a smooth curve plotted over a range of operating conditions, reflecting random (repeatability) errors in the underlying measurements. The deviation of these computed results from the smooth curve can be used to determine the uncertainty of a result over a range of operating conditions. In practice, the smooth curve-fits are often made using polynomials of up to the fifth order, although other functions may be employed. The use of a least-squares curve fit to relate the two parameters is the most common method of fitting the smooth curve.

The standard deviation of the sample mean in this case is the standard deviation of the difference of the independent measured parameter (e.g., turbine efficiency) from the curve fit to that parameter as a function of the independent parameter. For instance, suppose turbine efficiency η is plotted as a function of power output P, and a fifth-order polynomial relating these two parameters is determined by a least-squares technique, resulting in the following relationship:

$$\hat{\eta} = c_0 + c_1 P + c_2 P^2 + c_3 P^3 + c_4 P^4 + c_5 P^5$$

where the $c_0 - c_5$ are the polynomial coefficients. The standard deviation of the measurements from the curve fit is then given by

$$S_X = \left[\frac{1}{N - M - 1} \sum_{i=1}^{N} (X_i - \hat{X})^2\right]^{1/2}$$

where X_i are the individual results (efficiency η in this example), $\hat{X}$ is the curve fit of the result (efficiency, as a function of power), N is the number of measurements, and M is the number of coefficients to be determined (the polynomial coefficients of the example above).

The standard deviation of the sample mean for the turbine efficiency over the range of power outputs is then given by

$$S_{\bar{\eta}} = S_\eta / \sqrt{N}$$

where S_η is the standard deviation of the difference between the measurements and the curve fit, and N is the number of measurements.

It should be noted that the "random" error determined from a curve fit will depend not only upon the "scatter" in the measurements, but also upon the appropriateness of the curve used for the curve fit. For instance, if turbine efficiency is considered as a function of power output, a second-order polynomial will generally not follow the true curve very well. This will lead to a relative high estimate of uncertainty. The use of a higher order curve may reduce this uncertainty while retaining the smoothness and "reasonableness" of the curve. However, care must be used, and the fit curve should be plotted and investigated for reasonableness. For polynomial curve fits, for instance, the number of data points should be at least 1.5 to 2 times order of the curve fit. Fitting a fifth-order curve to six data points may result in a wildly oscillating curve. Experience has also shown that polynomial curves fits greater than fifth order often yield unsuitable curves. Such unreasonableness can be detected by simply plotting and inspecting the derived curve fit.

Copyright ASME International
Provided by IHS under license with ASME
No reproduction or networking permitted without license from IHS
Not for Resale

MANDATORY APPENDIX II
OUTLIERS

II-1

All measurement systems may produce spurious data points, also known as outliers, strays, mavericks, rogues, or wild points. These points may be caused by temporary or intermittent malfunctions of the measurement system. Data points of this type shall not be included as part of the uncertainty of the measurement. Such points are considered to be meaningless as steady-state test data, and shall be discarded.

II-2

The Modified Thompson τ Technique is recommended for testing possible outliers. The following is a summary of the technique. A more complete discussion with example is given in PTC 19.1-1998.

Let y_i be the value of the observation y that is most remote from $\hat{Y}$, the arithmetic mean value of all observations in the set, and S be the estimated standard deviation of all observations in the set. Then, if the value, without regard to sign, of

$$d = |y_i - \hat{Y}|$$

is greater than the product τS, then y_i is rejected as an outlier. The value of τ is obtained from Table II-1.

After rejecting an outlier, $\hat{Y}$ and S are recalculated for the remaining observations. Successive applications of this procedure may be made to test other possible outliers, but the usefulness of the testing procedure diminishes after each rejection.

Table II-1 Modified Thompson τ (at the 5% Significance Level)

Sample Size N	τ	Sample Size N	τ
3	1.150	22	1.893
4	1.393	23	1.896
5	1.572	24	1.899
6	1.656	25	1.902
7	1.711	26	1.904
8	1.749	27	1.906
9	1.777	28	1.908
10	1.798	29	1.910
11	1.815	30	1.911
12	1.829	31	1.913
13	1.840	32	1.914
14	1.849	33	1.916
15	1.858	34	1.917
16	1.865	35	1.919
17	1.871	36	1.920
18	1.876	37	1.921
19	1.881	38	1.922
20	1.885	39	1.923
21	1.889	40	1.924

II-3

All sets of readings should be examined for outliers before computations are made. All significant quantities, such as Q, H, P, and n should be tested for outliers. The test should also be applied to curves fit to test data over a range of operating conditions.

Copyright ASME International
Provided by IHS under license with ASME
No reproduction or networking permitted without license from IHS
Not for Resale

NONMANDATORY APPENDIX A
TYPICAL VALUES OF OVERALL UNCERTAINTY

Uncertainties in this Code are specified at the 95% confidence interval as described in Appendix I. The table below presents typical overall uncertainties (including both systematic and random errors), which may be attainable with calibrated instrumentation and normal test conditions. Smaller uncertainties can be obtained with ideal test conditions.

The values listed below for specific measurements are for general guidance only and should not be used without supporting calculations and verifications. Systematic and random uncertainties should be calculated in accordance with Appendix I and PTC 19.1-1998. This general list is not comprehensive and all uncertainties associated with each test measurement should be identified and separately addressed.

Flow Rate Uncertainty, U_Q

1. Current Meter Method	
Conduits from 1.2 to 1.5 m (4 to 5 ft)	± 1.2%
Conduits of more than 1.5 m (5 ft) diameter	± 1.0%
2. Pitometer Method	± 1.5%
3. Pitot Tube Method	± 1.5%
4. Salt Velocity Method	± 1.0%
5. Pressure-Time Method	± 1.0%
6. Ultrasonic Method (Two crossing planes — four paths each)	± 1.0%
7. Venturi Meter Method (Calibrated Venturi)	± 1.5%
8. Dye Dilution Method	± 1.5%
9. Volumetric Method	± 1.5%

Head Uncertainty, U_H

Measurement of free water level difference h	
1. Point gage, hook gage, or float gage	± $(1/h)$% (metric) ± $(3.2/h)$% (U.S. customary)
2. Plate gage, fixed	± $(5/h)$% (metric) ± $(16.4/h)$% (U.S. customary)
Pressure Uncertainty	
1. Deadweight gage	± 1.0%
2. Height of mercury (h')	± $(0.1/h)$ (metric) ± $(0.32/h)$ (U.S. customary)
3. Spring pressure gage	± 0.5%
4. Transducers	± (0.1 to 0.5%)

Power Uncertainty, U_P

1. By measurement of torque and speed	± 1.0%
2. By measurement at the terminals of:	
dc generators	± 1.0%
ac generators	± 0.5%

Depending upon the method employed for the determination of generator losses, and in cases where shunts are used for large direct currents, U_P may be greater than the above values. For example, the uncertainty in power at a test point can be calculated as follows:

Watthour meter uncertainty	±0.25%
Potential transformer uncertainty	±0.5%
Current transformer uncertainty	±0.5%
Timer uncertainty	±0.0001%
Uncertainty in generator efficiency	±0.1%

The calculated uncertainties then computed as described in Appendix I from the root sum square of the above uncertainties.

$$U_P = \pm(0.25^2 + 0.5^2 + 0.5^2 + 0.0001^2 + 0.1^2)^{0.5}$$

$$U_P = \pm 0.76\%$$

At other measuring points, the overall uncertainty would be different. With the utilization of accurate modern electronic instrumentation, it may be significantly smaller.

Speed Uncertainty

Electric counter and other precision speed measuring devices	±0.1%

Copyright ASME International
Provided by IHS under license with ASME
No reproduction or networking permitted without license from IHS
Not for Resale

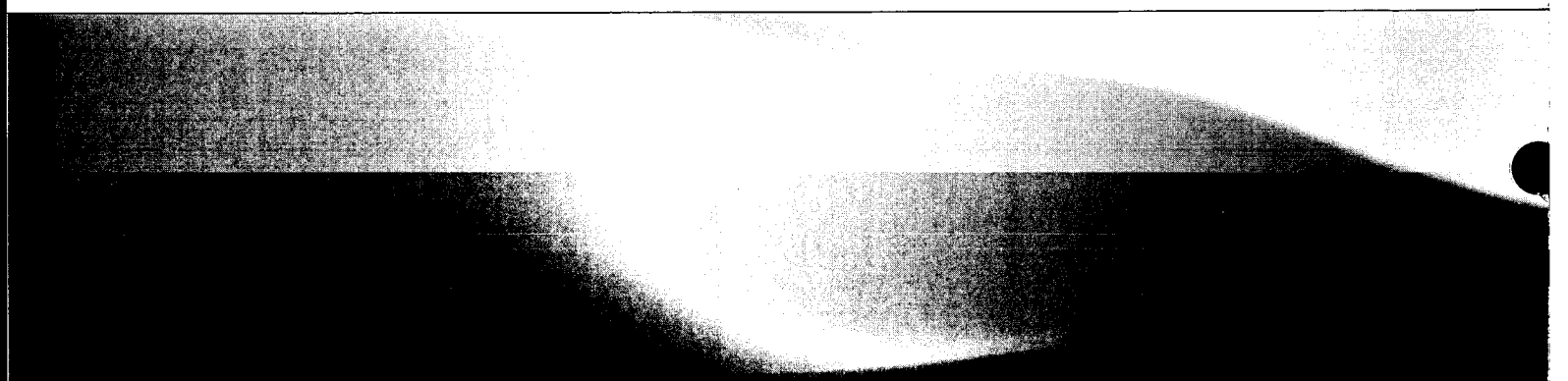

ISBN 0-7918-2800-X

9 780791 828007

C01802

Copyright ASME International
Provided by IHS under license with ASME
No reproduction or networking permitted without license from IHS

Not for Resale