STD.ASME PTC 12.2-ENGL 1998 ■ 0759670 0605005 509 ■

AMERICAN NATIONAL STANDARD

ASME
PTC 12.2-1998
(Revision of ANSI/ASME
PTC 12.2-1983)

Performance Test Code on Steam Surface Condensers

PERFORMANCE
TEST CODES



The American Society of
Mechanical Engineers

Copyright ASME International
Provided by IHS under license with ASME
No reproduction or networking permitted without license from IHS

Not for Resale

STD.ASME PTC 12.2-ENGL 1998 ■ 0759670 0605006 445 ■

AN AMERICAN NATIONAL STANDARD

ASME
PTC 12.2-1998
(REVISION OF
ANSI/ASME PTC 12.2-1983)

Performance Test Code on Steam Surface Condensers

The American Society of Mechanical Engineers

PERFORMANCE TEST CODES

Copyright ASME International
Provided by IHS under license with ASME
No reproduction or networking permitted without license from IHS
Not for Resale

Date of Issuance: September 18, 1998

This document will be revised when the Society approves the issuance of the next edition. There will be no addenda issued to ASME PTC 12.2-1998.

Please Note: ASME issues written replies to inquiries concerning interpretation of technical aspects of this document. The interpretations are not part of the document. PTC 12.2-1998 is being issued with an automatic subscription service to the interpretations that will be issued to it up to the publication of the next edition.

ASME is the registered trademark of The American Society of Mechanical Engineers.

This code or standard was developed under procedures accredited as meeting the criteria for American National Standards. The Standards Committee that approved the code or standard was balanced to assure that individuals from competent and concerned interests have had an opportunity to participate. The proposed code or standard was made available for public review and comment which provides an opportunity for additional public input from industry, academia, regulatory agencies, and the public-at-large.

ASME does not "approve," "rate," or "endorse" any item, construction, proprietary device, or activity.

ASME does not take any position with respect to the validity of any patent rights asserted in connection with any items mentioned in this document, and does not undertake to insure anyone utilizing a standard against liability for infringement of any applicable Letters Patent, nor assume any such liability. Users of a code or standard are expressly advised that determination of the validity of any such patent rights, and the risk of infringement of such rights, is entirely their own responsibility.

Participation by federal agency representative(s) or person(s) affiliated with industry is not to be interpreted as government or industry endorsement of this code or standard.

ASME accepts responsibility for only those interpretations issued in accordance with governing ASME procedures and policies which preclude the issuance of interpretations by individual volunteers.

No part of this document may be reproduced in any form,
in an electronic retrieval system or otherwise,
without the prior written permission of the publisher.

The American Society of Mechanical Engineers
Three Park Avenue, New York, NY 10016-5990

Copyright © 1998 by
THE AMERICAN SOCIETY OF MECHANICAL ENGINEERS
All Rights Reserved
Printed in U.S.A.

Copyright ASME International
Provided by IHS under license with ASME
No reproduction or networking permitted without license from IHS

Not for Resale

FOREWORD

(This Foreword is not a part of ASME PTC 12.2-1998.)

When the work of revising the ASME Power Test Codes of 1915 was undertaken it was decided to include a Committee to develop three separate test codes on Condensing Apparatus, Feedwater Heaters, and Water Cooling Equipment. The resulting Test Code for Steam-Condensing Apparatus, after passing through the preliminary stages in the procedure prescribed by the Main committee, was printed in tentative form in the May 1924 issue of *Mechanical Engineering* and was presented to the Society for discussion at a public hearing held during the Spring Meeting in Cleveland in May 1924. At the December 1924 meeting of the PTC Supervisory Committee (now known as the Board on Performance Codes), it was approved in its final revised form and on October 5, 1925, it was approved and adopted by the Council as a standard practice of the Society.

Early in 1933 Committee No. 12 decided to completely revise the Test Code for Steam-Condensing Apparatus. At the April 4, 1938, meeting of the PTC Supervisory committee, this second version of the Code was approved and on July 15, 1938, it superseded the previous one and was adopted as a standard practice of the Society by the Council.

With the reorganization of PTC Committee No. 12 on Condensers, Feedwater Heaters, and Deaerators in 1948, the main Power Test Codes Committee requested that the Test Code for Steam-Condensing Apparatus be brought up to date. This third edition of the Code was approved at the December 4, 1953, meeting of the Power Test Codes Committee and adopted by the Council as a standard practice of the Society on March 9, 1954.

In January 1970 the PTC Supervisory Committee requested the Test Code for Steam-Condensing Apparatus be reviewed and updated. That fourth version of the Code was approved by the Board on Performance Test Codes on May 12, 1981, and it became an American National Standard in January 1983.

The Board on Performance Test Codes in 1988 directed the Code again be reviewed to be certain it reflected current engineering practices. A new Code Committee was organized in early 1989 containing members from a wide geographical area. It comprised about equal numbers of manufacturing, user, and general interest members to ensure balanced committee actions. The 1989 Committee was organized into four Subcommittees — Guiding Principles, Test Procedures, Instruments and Methods, and Computation of Results — to be sure each section of the Code revision would get attention, and the work would be accomplished effectively.

Based on experience with the two previous versions of the Condenser Code, the reorganized Committee determined to make this Code modern, accurate, practical, useful, and cost effective. It also identified the objective of extending the Code to include performance monitoring, because of the relatively large effect of operating condensers on plant generation and efficiency.

These ambitious 1989 goals translated into extensive revisions which triggered an almost complete rewrite. The major areas were revised and the revision rationale of this latest Code follow:

Instruments: To take advantage of the recent significant advances in the field, instrumentation recommendations were modernized.

Heat transfer: To enlarge the condenser test schedule "window" while maintaining accurate test results, the separate heat-transfer resistance method with the latest correlations was adopted.

Implementation: To clarify the Code rules and produce a virtually self-contained document, techniques and instrumentation descriptions were written in an explicit and detailed manner.

Copyright ASME International
Provided by IHS under license with ASME
No reproduction or networking permitted without license from IHS
Not for Resale

Uncertainty determinations: To ensure proper applications of uncertainty analysis, all the particulars of this somewhat daunting estimate (a very important and now necessary aspect of every test) are presented.

Data acquisition: To improve the condenser test effectiveness, computerized data acquisition for the testing and data reduction is suggested; however, the Code is written so that this approach is not necessary.

Cleanliness testing: To be certain the condenser performance results are not predestined, a mandatory cleanliness test is now required by this Code. It is important to explain, though, that the entire previous cleanliness test section was replaced with a new, pragmatic, fouling test procedure.

Lastly, this expanded fifth edition of the Code was re-titled *Steam Surface Condensers.* This Code was approved by the PTC 12.2 Committee on January 20, 1996. It was then approved and adopted by the Council as a Standard practice of the Society by action of the BPTC on December 20, 1996. This Performance Test Code was also approved as an American National Standard by the ANSI Board of Standards Review on February 20, 1998.

Copyright ASME International
Provided by IHS under license with ASME
No reproduction or networking permitted without license from IHS
Not for Resale

PERSONNEL OF PERFORMANCE TEST COMMITTEE NO. 12.2 ON STEAM SURFACE CONDENSERS

(The following is the roster of the Committee at the time of approval of this Code.)

OFFICERS

J. M. Burns, *Chair*
C. W. Almquist, Ph.D., *Vice Chair*
J. H. Karian, *Secretary*

COMMITTEE PERSONNEL

Charles W. Almquist, Ph.D., Principia Research Corp.
Frank S. Ambrogi, Ecolaire Corp.
Larry J. Beal, PSI Energy
Robert J. Bell, Heat Exchanger Systems, Inc.
John M. Burns, Stone & Webster Engineering Corp.
Roland L. Coit, Consultant
Eugene Hernandez, Community Energy Alternatives
Jack H. Karian, ASME International
Philip Marks, Graham Manufacturing Company, Inc.
Edward G. Saxon, Conco Systems, Inc.
James W. Thornton, Virginia Power
John L. Tsou, Electric Power Research Institute
John G. Yost, Resource Management International, Inc.

Copyright ASME International
Provided by IHS under license with ASME
No reproduction or networking permitted without license from IHS
Not for Resale

BOARD ON PERFORMANCE TEST CODES

OFFICERS

D. R. Keyser, *Chair*
P. M. Gerhart, *Vice Chair*
W. O. Hays, *Secretary*

COMMITTEE PERSONNEL

R. P. Allen
C. W. Almquist
R. L. Bannister
D. S. Beachler
B. Bornstein
J. M. Burns
J. R. Friedman
G. J. Gerber
R. S. Hecklinger
R. W. Henry
S. J. Korellis
T. H. McCloskey
J. W. Milton
G. H. Mittendorf
S. P. Nuspl
R. P. Perkins
A. L. Plumley
R. R. Priestley
C. B. Scharp
J. Siegmund
J. A. Silvaggio
R. E. Sommerlad
W. G. Steele
J. C. Westcott
J. G. Yost

Copyright ASME International
Provided by IHS under license with ASME
No reproduction or networking permitted without license from IHS
Not for Resale

CONTENTS

Foreword iii
Committee Roster v

Section

0 Introduction 1
1 Object and Scope 3
1.1 Object 3
1.2 Scope 3
1.3 Uncertainty 3
2 Definitions and Description of Terms 5
2.1 Symbols 5
2.2 Subscripts 8
2.3 Superscripts 8
2.4 Uncertainty Analysis Nomenclature 8
3 Guiding Principles 9
3.1 Purpose and Intent 9
3.2 Test Plan Requirements 9
3.3 Test Schedule 10
3.4 Allowable Deviations 10
3.5 Method of Operation 10
3.6 Preparation for Test 10
3.7 Condenser Isolation 10
3.8 Non-Condensible Gas Load 10
3.9 Tubeside Blockage 11
3.10 Tubeside Fouling 11
3.11 Dissolved Oxygen 11
3.12 Preliminary Testing 11
3.13 Constancy of Test Conditions 12
3.14 Duration of Test Runs 12
3.15 Test Sequence 12
3.16 Performance Test Overview 12
4 Instruments and Methods of Measurement 15
4.1 Purpose and Intent 15
4.2 Location of Test Points 15
4.3 Instrumentation and Methods of Measurement 17
5 Computation of Results 27
5.1 Basic Heat Transfer Relations 27
5.2 Condenser Pressure Deviation Results Calculations 28
5.3 Deviation of Results Calculations for other Parameters 32
5.4 Uncertainty Analysis 32
6 Report of Results 37
6.1 Composition of Report 37
6.2 Report of Data 38

Copyright ASME International
Provided by IHS under license with ASME
No reproduction or networking permitted without license from IHS
Not for Resale

Figures

4.1 Location of Condenser Test Points 16
4.2 Basket Tip 18
4.3 Guide Plate 18
4.4 Recommended Velocity Traverse Locations. 21
5.1 Multishell Multipressure Condenser 30
5.2 Single-Shell Multipressure Condenser 30

Tables

3.1 Allowable Deviations from Specified Test Conditions 10
3.2 Non-Condensible Gas Load (Air In-leakage) Limits 11
5.1 Student's t_v Table for the 95% Confidence Level. 33

Nonmandatory Appendices

Foreword 41
A Guideline: Flowcharts/Checklists. 43
B Guideline: Automatic Data Acquisition 49
C Guideline: Performance Monitoring 51
D Guideline: Example Calculations. 53
E Detail: Uncertainty Analysis for Condensing Pressure 67
F Detail: Geothermal Surface Condensers 73
G Diagnostic: Air Binding. 75
H Diagnostic: Non-Condensible Removal Equipment 77
I Diagnostic: Tube Fouling 79
J Physical Properties of Seawater. 81
K References 87

Copyright ASME International
Provided by IHS under license with ASME
No reproduction or networking permitted without license from IHS
Not for Resale

CODE FOR STEAM SURFACE CONDENSERS

SECTION 0 — INTRODUCTION

0.1 INTRODUCTION

This Code describes instruments, test procedures, and methods of test data analysis to be used to determine and monitor the performance of steam-surface condensers. It provides explicit test procedures which will yield results of the highest level of accuracy consistent with the best current engineering practices and knowledge in this field. The Code is not intended to be used for tests of condensers or heat exchangers operating above atmospheric pressure or air-cooled condensers.

To aid in an overall study of the Code, the following review sequences are suggested.

0.1.1 A quick survey of the Code can be obtained by reading the introductions to each Section followed by the Test Procedures Flow Charts and Test Plan Appendix.

0.1.2 At the plant design, contractual agreement, or specification stage, it is advisable to review in order:

(a) Achievable test uncertainty stated in Object and Scope;

(b) Test Procedures or alternatively the particular special test from Appendix A;

(c) Test Plan and Flowcharts;

(d) Guiding Principles;

(e) Instrumentation and Methods of Measurement to determine the hardware that must exist or be installed in the condenser to determine the recommended measurements.

0.1.3 Those interested in performance monitoring should review Appendix C, then the Test Plan and Flowcharts before reviewing Code Section details.

When this Code is to be used to determine fulfillment of contractual obligations, the contracting parties shall agree in advance on the test procedures, uncertainty estimates and implications, and methods of presentation of data and presentation of results.

Considerable efforts were made to write this condenser Code so that all the related technology was contained within the document itself; however, in all instances this was not possible. In these cases and unless otherwise specified, all references to other codes refer to ASME Performance Test Codes. Any terms not defined herein are listed in PTC 2 Definitions and Values. [4] Descriptions of instruments, apparatus, and the general basis of the uncertainty analysis beyond that specified in this Code may be found in the Supplements on Instruments and Apparatus, ASME PTC 19.1. [4] A careful study should be made of all the referenced codes, but in the event of discrepancies between the specific directions contained herein and those Codes incorporated by reference, PTC 12.2 shall govern.

Copyright ASME International
Provided by IHS under license with ASME
No reproduction or networking permitted without license from IHS
Not for Resale

SECTION 1 — OBJECT AND SCOPE

1.1 OBJECT

This Code provides standard directions and rules for conducting and reporting performance tests of water-cooled, steam surface condensers, hereafter referred to as condensers. The Code provides explicit test procedures to yield results of the highest level of accuracy consistent with the best engineering knowledge and practice currently available. The main purpose of this Code is to provide rules for performing condenser acceptance tests. The Code also provides guidelines for the routine performance evaluation of condensers.

The acceptance test can be used to determine compliance with contractual obligations and can be incorporated into commercial agreements. The test shall be considered an ASME Code Test only if the test procedures comply with those detailed recommendations in this Code and the pretest and post test uncertainty analysis complies with Subsections 1.3 and 5.4.

1.1.1 This Code provides rules for determining the performance of a condenser with regard to the following:

(a) the absolute pressure maintained by the condenser, or its projected design pressure with an uncertainty of ±0.12 in. Hg;

(b) the extent of condensate subcooling with an uncertainty of ±0.2°F;

(c) the amount of dissolved oxygen in the condensate, with an uncertainty of ±1.0 ppm; and

(d) the tubeside pressure drop, with an uncertainty of ±2%.

1.1.2 Test methods for determining the tube bundle performance factor and degree of tube fouling, expressed as a cleanliness factor or fouling resistance, are described.

1.2 SCOPE

The rules and instructions included in this Code are for the condenser proper. If the scope of the test includes any or all of the auxiliary apparatus associated with the condenser, it will be necessary to refer to other ASME Performance Test Codes.

1.2.1 The determination of special data or verification of guarantees which are outside the scope of this Code shall be made only with the written agreement of the parties to the test, especially regarding methods of measurement and computation, which shall be completely described in the test report.

1.3 UNCERTAINTY

The uncertainty of the projected design point pressure from the acceptance test, using the recommended procedures and instrumentation, is expected to be less than 0.1 in. Hg. A post test uncertainty analysis is required. Due to the variety of methods and instruments, the test uncertainty for routine heat transfer performance tests must be estimated by a specific uncertainty analysis, described in Subsection 5.4, and the resulting uncertainty shall be less than 0.12 in. Hg in order to be considered a Code Test. The other test objective parameter uncertainties are more directly measured and defined in para. 1.1.1.

Copyright ASME International
Provided by IHS under license with ASME
No reproduction or networking permitted without license from IHS Not for Resale

SECTION 2 — DEFINITIONS AND DESCRIPTION OF TERMS

2.1 SYMBOLS

The following symbols are to be used unless otherwise defined in the text.

Symbol	Term	Description	Units	
			U.S. Customary	SI
A	Effective outside tube surface area	Total active external area of all tubes in condenser, including external air cooler if used. Active area excludes any tubes that may be plugged at time of test.	ft^2	m^2
c_f	Cleanliness factor	Ratio of thermal transmittance of used tubes to that of new or cleaned (to a like-new state) tubes operating under identical conditions.	—	—
c_p	Specific heat	Specific heat of cooling water at average temperature and for salinity measured during test.	Btu/lb°F	J/gK
d	Tube diameter	Outer diameter of condenser tube.	in.	—
D	Tube diameter	Outer diameter of condenser tube.	—	m
DO	Dissolved oxygen	Amount of oxygen dissolved in condensate.	ppm	μg/l
F	Fluorescence	Measure of the presence of an indicating dye in percent of solution for use in determining flow rate in large conduits (percent).	—	—
g	Acceleration of gravity	Constant used in Nusselt equation.	ft/sec^2	m/s

Copyright ASME International
Provided by IHS under license with ASME
No reproduction or networking permitted without license from IHS
Not for Resale

Symbol	Term	Description	Units: U.S. Customary	Units: SI
h	Heat transfer coefficient	Rate of heat transfer per unit of surface area and temperature difference. This quantity is the fundamental measure of the condenser performance.	Btu/hr-ft^2-°F	W/m^{2}K
ΔH	Differential pressure	Differential pressure across the orifice plate in water gauge	in.	cm
j	Variable	Summation	—	—
k	Thermal conductivity	Rate of heat transfer per unit of distance within a material	Btu/hr-ft-°F	W/m-K
L	Length	Condenser tube length	ft	m
$LMTD$	Log mean temperature difference	Computed logarithmic mean temperature difference between steam and cooling water (see Section 5)	°F	°C
ln	Natural logarithm		—	—
m	Molecular weight	Formula mass	lb/lb-mol	kg/kg-mol
N	Quantity	Number of condenser tubes	—	—
NTU	Number of heat transfer units		—	—
n	Quantity	Number of condenser tube passes	—	—
P	Pressure	Absolute fluid pressure	psia or in. Hga	kPa
Pr	Prandtl number	Ratio of momentum diffusivity to thermal diffusivity ($c_p\mu/k$)	—	—
ΔP	Pressure drop	Loss of pressure due to friction in fluid system between two points	psi	kPa
Q	Condenser heat load	Rate at which heat in steam is transferred to cooling water. This is usually considered the independent variable in any condenser test.	Btu/hr	W

Copyright ASME International
Provided by IHS under license with ASME
No reproduction or networking permitted without license from IHS
Not for Resale

Symbol	Term	Description	Units	
			U.S. Customary	SI
SCFM	Air in-leakage	Measured rate of standard air (at 14.7 psia and 60°F) in-leakage into condenser as discharged from air-removal system	scfm	—
Re	Reynolds number	Ratio of inertial reaction per unit volume of fluid to viscous force per unit volume of fluid. ($\rho d_i v/\mu$)	—	—
R	Shellside resistance	Heat transfer resistance outside of the condenser tubes	hr-ft^2-°F/Btu	m^{2}K/W
T	Temperature	Temperature of cooling water, steam, or condensate.	°F	°C
ΔT	Temperature differential	Difference in fluid temperature between two points.	°F	°C
U	Heat transfer coefficient	Rate of heat transfer per unit of surface area and temperature difference. This quantity is the fundamental measure of the condenser performance.	Btu/hr-ft^2-°F	W/m^{2}K
v	Cooling-water velocity	Average water velocity through tubes. For multipass condensers with an unequal number of tubes in the different passes, the average of the average velocities for all passes shall be used.	ft/sec	m/s
w	Flow rate	Quantity of cooling water passing through condenser per unit of time.	lb/hr	kg/h
Ws	Steam flow rate	Quantity of steam entering condenser per unit of time.	lb/hr	kg/h
Δ	Differential	Difference between two measured values.	—	—
μ	Viscosity	Intensity of viscous shear within a fluid.	lb/hr-ft	kg/s-m
ρ	Density	Ratio of mass to volume of a fluid or solid.	lb/ft^3	kg/m^3

Copyright ASME International
Provided by IHS under license with ASME
No reproduction or networking permitted without license from IHS
Not for Resale

2.2 SUBSCRIPTS

Symbol	Term
B	Bulk
c	Clean
DO	Dissolved oxygen
F	Film
f	Fouling factor
G	Gas (non-condensible)
i	Inside tube
m	Metal
o	Outside tube
x	Low-pressure section
y	Intermediate pressure section
z	High-pressure section
s	Shell or steam
sat	Saturation
T	Total
T	Tubeside
v	Vapor
w	Wall of tube
1	Inlet
2	Outlet
3	Condensate
Δ	Differential

2.3 SUPERSCRIPTS

Symbol	Description
*	Value derived from the design reference.
+	Measured value or calculated value at the test conditions.
o	Test value corrected to the design reference conditions.

2.4 UNCERTAINTY ANALYSIS NOMENCLATURE

Symbol	Description
Un_{Ps}	The overall uncertainty in the test-adjusted steam pressure at a 95% coverage.
$Un_{\Delta Pw}$	The overall uncertainty in the test-adjusted tubeside pressure drop at a 95% coverage.
B_j	The bias limit for parameter *j*.
F	Recurring subset partial derivative within sensitivity factor equations.
S_j	The precision index for parameter *j*.
t_ν	The Student's *t*-statistic, determined from tabular data for the degrees of freedom, ν, and a 95% coverage, per Table D5.1.
ν_j	The degrees of freedom for parameter *j*, used in evaluating the precision error estimate.
Θ_j	The sensitivity factor for parameter *j*.

Copyright ASME International
Provided by IHS under license with ASME
No reproduction or networking permitted without license from IHS Not for Resale

SECTION 3 — GUIDING PRINCIPLES

3.1 PURPOSE AND INTENT

The parties to the test shall reach agreement as to its specific purpose. When the condenser is part of a contract with other major equipment of the plant or when the condenser contract includes auxiliary equipment which can affect the condenser performance, all parties must agree whether the testing is to be performed on each piece of equipment separately or on the system as a whole.

If each apparatus is tested separately, the observation and test of each apparatus shall be conducted according to the applicable ASME Code or, if none exists, a method must be agreed upon in advance of the test. Wherever a special method of testing is used, that is, any method not explicitly covered in the Code, it shall be agreed upon in advance of the test by all parties and shall be fully described in the test report.

It is important to structure a specific test plan for all testing that is to take place. The plan should follow the guidelines and recommendations given in this Section. In doing so, inconsistencies associated with test execution, communications, procedure adherence, and test schedule can be greatly diminished. Appendix A contains several elements of a test plan i.e., flowcharts and checklists.

3.2 TEST PLAN REQUIREMENTS

3.2.1 Test Plan Introduction. In an effort to have a mutual agreement between the testing parties, it is strongly recommended that a test plan be developed that will address all items of possible disagreement. In order to accomplish this, a document should be written to define this test plan and identify all designated parties having the responsibility to perform, witness, or approve any test deviation from this Code or any other mutually agreed-upon test plan or procedure. This document should also serve as a guide for those performing or interpreting the results of the specific test. It should include, but not be limited to, the following sections.

3.2.2 Specific Scope and Objective. The application of this Code will vary with location, environment, equipment, and specific agreements made by the participants. A site-specific scope and objective should be agreed upon and incorporated as part of the test plan. This should include the designation of a chief-of-test who will direct the test and exercise authority over all test personnel. This individual should have the required experience to conduct this type of test.

3.2.3 Operational Requirements. The test plan should include all specifications regarding the operational requirements for the condenser and any ancillary system that may affect its performance. A listing of all values for the operational and performance parameters should be contained in this section including any specific operational changes necessary to perform the test. These can include specific cycle-isolation considerations and the verification of any items which can be considered deviations from the Code, reasons for their occurrence, and any other item which can possibly impact on the operation and performance of the condensing apparatus. (Refer to Table 3.1 for limits.)

3.2.4 Test Acceptance Criteria. This section of the plan will include an explanation of the test acceptance criteria and a description of how the results will be used in the evaluation of any contractual commitments or guarantees associated with the performance of the condenser. A pretest uncertainty analysis is highly recommended as part of this section. Any other items not mentioned or specifically identified as items of mutual agreement should be discussed in this section.

3.2.5 Instrumentation List. A list including all test parameters, instruments used, expected accuracy, calibrations thereof, installation location, and anticipated values should be included as part of this section. This will help clarify any misunderstandings that can occur during the instrumentation selection process and serve as an aid for instrument diagnosis. (Refer to Appendix A for guidance.)

Copyright ASME International
Provided by IHS under license with ASME
No reproduction or networking permitted without license from IHS Not for Resale

TABLE 3.1
ALLOWABLE DEVIATIONS FROM SPECIFIED TEST CONDITIONS

Testing Parameter	Deviation from Specified Test Conditions	Constancy of Conditions*
inlet-water temperature	±10°F	±2°F
heat load	±5%	±2%
cooling-water flow	±5%	±2%

*Refer to Subsection 3.13.

3.2.6 Test Preparation Checklist. In order to help those administering, witnessing, or responsible for the test, it is important that a checklist be constructed in which all test steps are depicted in a clear and chronological order. The list should have enough information to give the user an understanding of what is necessary to prepare, conduct, and organize the test. The amount of information should be carefully selected since this section will not be used in substitution or enhancement of any other portion of the test plan. (Refer to Appendix A for guidance.)

3.2.7 Test Plan Flowchart. A flowchart highlighting all the important events of this section should be included in order to help the user follow the significant details associated with test preparation, organization, and execution. (Refer to Appendix A for guidance.)

3.3 TEST SCHEDULE

This Code does not limit the time after installation in which the acceptance test shall be conducted because the required cooling-water temperature can only be obtained at certain times of the year. However, the acceptance test shall be conducted as soon as the desired test conditions are obtainable. Performance degradation that is not inherent to the design or the fabrication of the condenser should be noted, such as normal wear, abnormal operation, or inadequate preservation procedures.

3.4 ALLOWABLE DEVIATIONS

Testing shall be performed under conditions of constant inlet-water temperature, heat load, and cooling-water flow within the limits specified in Table 3.1.

3.5 METHOD OF OPERATION

Agreement shall be reached concerning the general method of operating the condenser and the prime-mover during the test. This includes stabilizing the initial steam condition, prime-mover power output, and the cooling-water flow rate.

3.6 PREPARATION FOR TEST

Prior to the test, the parties to the test shall be given an opportunity to examine and familiarize themselves with all the apparatus connected with the condenser, and all piping involved. The instruments to be used and the methods to be employed in calibrating and checking instruments shall also be agreed upon in advance of the test. All parties to the test shall certify that the condensing equipment is in satisfactory condition for the test.

3.7 CONDENSER ISOLATION

A method of diverting or measuring extraneous drains shall be agreed upon prior to testing. Any pertinent circuits, including makeup water, that can jeopardize the results of the test, shall be isolated.

3.8 NON-CONDENSIBLE GAS LOAD

Excessive air in-leakage often degrades the condenser performance and increases the concentration of dissolved oxygen in the condensate. Although the air-removal rate does not enter directly into the computation of the condenser heat transfer capability, it must be within the limits set in Table 3.2. This will ensure that the performance of the condenser has not been impaired and the dissolved oxygen

Copyright ASME International
Provided by IHS under license with ASME
No reproduction or networking permitted without license from IHS
Not for Resale

TABLE 3.2
NON-CONDENSIBLE GAS LOAD (AIR IN-LEAKAGE) LIMITS

Number of Condenser Shells	Total Exhaust Steam Flow to Condenser (lb/hr)	Non-condensible Gas Load Limit (SCFM)
One	Up to 1,000,000	1.0
One	100,000–250,000	2.0
One	250,000–500,000	2.5
One	500,000–1,000,000	3.0
One	1,000,000–2,000,000	3.75
One	2,000,000–3,000,000	4.5
One	3,000,000–4,000,000	5.0
Two	200,000–500,000	3.5
Two	500,000–1,000,000	4.0
Two	1,000,000–2,000,000	6.0
Two	2,000,000–4,000,000	7.5
Two	4,000,000–6,000,000	8.5
Two	6,000,000–8,000,000	10.0
Three	750,000–3,000,000	7.5
Three	3,000,000–6,000,000	9.0
Three	6,000,000–9,000,000	11.0
Three	9,000,000–12,000,000	13.0

concentration in the condensate has not been exceeded. Prior to any performance testing, the non-condensible gas load shall be measured to assure adherence to the guideline in Table 3.2. Techniques for measuring non-condensible gas load are given in Fluid Meters [7] and PTC 19.5 [4] and the use of contemporary instrumentation is highly recommended. It is important to verify that all air-removal equipment is functioning properly prior to the performance test.

3.9 TUBESIDE BLOCKAGE

The accumulation of debris on the inlet tubesheet is common in surface condensers and may even occur where the cooling water is carefully screened. Such accumulation results in totally or partially plugging some of the tubes, thereby reducing the active surface area of the condenser. It is highly recommended that a visual inspection for tubesheet blockage be conducted before and after testing.

3.10 TUBESIDE FOULING

Condenser tubes shall be thoroughly cleaned just prior to the test. For the method of determining the quantitative effect of tubeside fouling see Section 4.

3.11 DISSOLVED OXYGEN

3.11.1 Makeup Water. The total water introduced into the condenser shell at a temperature lower than the inlet steam temperature shall not be more than 5% of the steam being condensed for 14 μg/l dissolved oxygen concentration, or more than 3% for 7 μg/l dissolved oxygen concentration. Special considerations must be made when testing systems where excessive makeup is the norm. The dissolved oxygen concentration in the condensate of such systems can be difficult to measure.

3.11.2 Sample Method. Agreement shall be made on the sample location and method of analysis if either is different from those described in para. 4.3.9.

3.12 PRELIMINARY TESTING

A preliminary run shall be conducted for the purposes of:

(a) checking all instrumentation

(b) training personnel

(c) making minor adjustments which were not evident during the test preparation as outlined in the test plan

(d) checking adequacy of equipment isolation

Copyright ASME International
Provided by IHS under license with ASME
No reproduction or networking permitted without license from IHS
Not for Resale

(e) determining that the various parameters are within the limits in Table 3.1

If mutually agreed upon, the preliminary run may be declared an acceptance run, provided that it has complied with all the requirements of this Code.

3.13 CONSTANCY OF TEST CONDITIONS

Any condition whose variation may affect the test results shall be made as constant as possible before the test run begins and shall be maintained throughout the run. It is desirable to observe and record all readings for a brief period after the unit has attained steady-state conditions but before the formal readings are taken (see Table 3.1).

If inconsistencies are observed for a test run, the run shall be rejected in whole or in part, and shall be repeated if necessary to attain the object of the test.

3.14 DURATION OF TEST RUNS

After steady-state conditions are achieved, a 1-hr data retrieval period is sufficient for a single test run. Readings shall be taken at intervals not exceeding 5 min. For a 1-hr test, the minimum number of readings for a particular parameter would be thirteen.

3.15 TEST SEQUENCE

Each test run should be conducted in accordance with a predetermined test plan. Such a schedule should provide sufficient time for conditions to be stabilized between runs.

3.16 PERFORMANCE TEST OVERVIEW

3.16.1 Introduction. The following items provide an overview of the four types of tests prescribed by this Code, including the general procedures which shall be followed in conducting a Code-type condenser test, and the measurements required for each test. Frequent reference is made to relevant Sections in this Code, particularly Section 4.

There are four types of test described by this Code: (1) heat transfer test; (2) dissolved oxygen test; (3) condensate subcooling test; and (4) condenser hydraulic pressure drop test. Any or all of these tests may comprise a condenser test under this Code. Other auxiliary tests, which are not considered to be a part of the Code test program but which may be useful for diagnostic purposes, are given in Appendices F through I.

Before conducting a condenser test, careful consideration must be given to the specific areas covered in this Section. Prior to testing, the parties involved shall agree to:

(a) a test plan as specified in Subsection 3.2;

(b) the plant operating conditions, including plant load and cooling-water flow rate, which must be steady for the duration of the test;

(c) the necessary condenser isolations, per Subsection 3.7. This is important to assure that the condenser is handling only the flow for which it was designed;

(d) the inlet cooling-water temperature at which the test is to be conducted, this factor may limit testing to only certain times of the year;

(e) other operating principles as specified in this Section;

(f) the other types of instruments to be used, their locations, and the methods of measuring those instruments. Acceptable instrumentation practices are covered in Section 4.

3.16.2 Heat Transfer Test. The purpose of the heat transfer test is to determine the overall heat transfer coefficient (OHTC) of the condenser at test, design, guarantee, or other specified conditions; from the OHTC, the absolute pressure of the condenser at the design or other conditions can be established. It will usually be impossible to conduct the tests at the exact conditions called for in the design, guarantee, or other specified conditions.

Provided the deviations from nominal conditions are within the guidelines given in Table 3.1, a Code condenser heat transfer test can still be performed. In this situation, the results from the test are corrected to design conditions using the procedures described in Section 5. These corrections determine the ability of the apparatus to condense the required amount of steam and to maintain the nominal condenser pressure at design, guarantee, or other specified conditions. For a Code test these corrections are required to be properly applied and so certain parameters shall be carefully measured. Determining any two of the three following conditions — cooling-water flow, condenser temperature rise, and condenser heat load — allows calculation of the third. This would meet the requirements necessary to perform a complete heat balance on the apparatus and ultimately serve as the foundation for calculating an OHTC.

The corrections described in Section 5 are based on a rational analysis of the governing heat transfer

Copyright ASME International
Provided by IHS under license with ASME
No reproduction or networking permitted without license from IHS Not for Resale

mechanisms, using a log-mean temperature difference (LMTD) approach to determine an overall heat transfer coefficient. Consequently, the following quantities must be measured for the heat transfer test.

3.16.2.1 Condenser Shellside Pressure. The condenser shellside pressure is typically the basis for the design or guarantee point. Condenser pressure is therefore a key measurement. The shellside saturation temperature, used in determination of the OHTC, is determined from the condenser shellside pressure. Acceptable instrumentation for the measurement of condenser pressure is described in para. 4.3.1.

3.16.2.2 Cooling-Water Inlet and Outlet Temperatures. Inlet and outlet cooling-water temperatures are used to determine the OHTC of the condenser. Since inlet cooling-water temperature is also specified in the design or guarantee conditions for the condenser, it is important that the inlet cooling-water temperature during the tests be within the guidelines specified in Subsections 3.3 and 3.13.

Because outlet temperature stratification often occurs in condensers, particular attention must be paid to the determination of outlet temperature. Careful consideration of the requirements of para. 4.3.3 and the physical characteristics of the condenser installation should precede any decision on the best means of measuring the outlet temperature.

3.16.2.3 Cooling-Water Flow. The cooling-water flow is required for several phases of the analysis. Unless a turbine test per PTC 6 [4] is performed concurrently, measurement of the cooling-water flow rate, together with the inlet and outlet temperatures, is the preferred method of determining the heat load on the condenser, which is required to determine the OHTC. Several methods for accurately determining the cooling-water flow rate are given in para. 4.3.4. Choice of an appropriate method can only be made after considering both the requirements of the individual methods and the characteristics of the particular installation being tested.

It is extremely important that an appropriate method of condenser cooling-water flow measurement is chosen. The heat load may also be determined by a full steam cycle energy balance, performed in conjunction with a full turbine test as specified by PTC 6. [4] In this case, the cooling-water flow rate is not required for the determination of heat load.

The cooling-water flow rate is also specified in the design or guarantee conditions, and must be held within the operational guidelines specified in Table 3.1.

3.16.2.4 Condenser Fouling. The degree of fouling on the cooling-water side of the tubes (the fouling factor) must be determined to correct the measured results to design or guarantee conditions. A method of determining the fouling factor based on determination of the relative heat transfer coefficients of clean and as-found tube pairs distributed throughout the tube bundle is described in para. 4.3.12.

3.16.3 Dissolved Oxygen. The dissolved oxygen concentration in the condensate is often a guarantee item for the acceptance of a condenser. The test method for determination of dissolved oxygen is given in para. 4.3.9. It is generally desirable to conduct the test for dissolved oxygen at the same time as the condenser tests, to ensure that all operating requirements are met.

It is especially important that the air-removal equipment be operating properly and that air inleakage be held to acceptable limits during the tests. Non-condensible gas load is discussed in Subsection 3.8. Further guidance on the assessment of the operation of the air-removal equipment can be found in Appendix H.

3.16.4 Condensate Subcooling. Condensate subcooling (condensate depression) is the degree to which the condensate has been cooled below the saturation temperature corresponding to the measured condenser shellside pressure. Condensate subcooling must be measured if it is a design or guarantee point for the condenser, or if it is of interest for general performance calculations. The condensate temperature is determined at the same time as the heat transfer test, using the method given in para. 4.3.10.

3.16.5 Cooling-Water Pressure Drop. To ensure adequate performance of the cooling-water pumping system, the pressure drop across the condenser should be within design values. The condenser pressure drop is measured from the inlet flange to the outlet flange of the condenser. It is recommended that the pressure drop measurements be made at

Copyright ASME International
Provided by IHS under license with ASME
No reproduction or networking permitted without license from IHS Not for Resale

the same time as the condenser test. Methods for measuring the condenser pressure drop can be found in para. 4.3.8. The pressure drop across the condenser is corrected from actual to nominal flow using the procedure described in Section 5.

Copyright ASME International
Provided by IHS under license with ASME
No reproduction or networking permitted without license from IHS

Not for Resale

SECTION 4 — INSTRUMENTS AND METHODS OF MEASUREMENT

4.1 PURPOSE AND INTENT

This Section describes the instruments and the methods for their application which are required for the condenser performance test described in this Code. Reference is made to existing standards and procedures although major requirements and considerations which are of particular relevance to condenser performance testing are summarized where appropriate. Not all instruments or techniques described in this Section are applicable to every condenser test program. Consult the procedural descriptions given in Section 3 to determine which instruments and methods are applicable. Where this Code refers to NIST (National Institute of Standards and Technology) standards and calibrations, those of other equivalent national standards laboratories may be used as appropriate for the locale of the testing.

Before proceeding to select, construct, install, calibrate, or operate instruments, relevant Sections of the PTC 19 Series of supplements on Instruments and Apparatus [4], ASME MFC-3M (to be superceded by ASME PTC 19.5 when it is published) [11], or ASME *Fluid Meters* [7] should be consulted for detailed instructions.

Achievement of the required accuracy for each parameter measured is the single most important criterion in selection of an appropriate method of measurement. This Code shall not be construed as preventing the use of advanced technologies or methods of measurement not described herein, provided that the accuracy requirements of Appendix D are achieved by the alternative method.

It is highly recommended that provisions for condenser testing be incorporated into the design of the facility at which the condenser is located. Backfitting an existing system for the required measurements can be very expensive and time-consuming at best, and virtually impossible at worst.

4.2 LOCATION OF TEST POINTS

4.2.1 General. Figure 4.1 illustrates the general location of the test points. Additional test points not required by this Code may be included for reference purposes by mutual agreement between the parties to the test.

4.2.2 Single-Pressure Surface Condenser. Figure 4.1 shows the location of the test points in the condenser neck that are needed to obtain the performance data required for a single-pass single-pressure surface condenser. The final location of all test points should be determined by mutual agreement, taking into account the internal design of the condenser and external piping configuration, both of which may result in stratification at the measurement points. Test points with instruments internal to the condenser, such as basket tips and thermowells, should be located to avoid interference from condenser internal structural bracing and components. All waterbox test connections should be shop installed if the internal surfaces of the waterboxes require a protective coating or lining. Field-installed test connections require field repair of the coating or lining.

4.2.3 Multipressure Surface Condenser. The performance test points and test point locations for multipass and multipressure surface condensers will be similar to those illustrated in Fig. 4.1 except for the following considerations:

Single-shell multipressure condensers require additional condenser pressure test points above each tube bundle in each of the multipressure condensing zones. The performance of each zone can be closely estimated by measuring the final outlet temperature in accordance with para. 4.3.3 and proportioning the temperature rise of each zone using procedures described in Section 5.

Multishell multipressure condensers require additional pressure and temperature test points to measure the inlet and outlet cooling-water pressure and temperature for each of the multipressure condenser shells. Stratification can persist in the short length of the cooling-water crossover piping between multipressure condenser shells. Therefore, the average temperature of the inlet cooling water to the interme-

Copyright ASME International
Provided by IHS under license with ASME
No reproduction or networking permitted without license from IHS Not for Resale

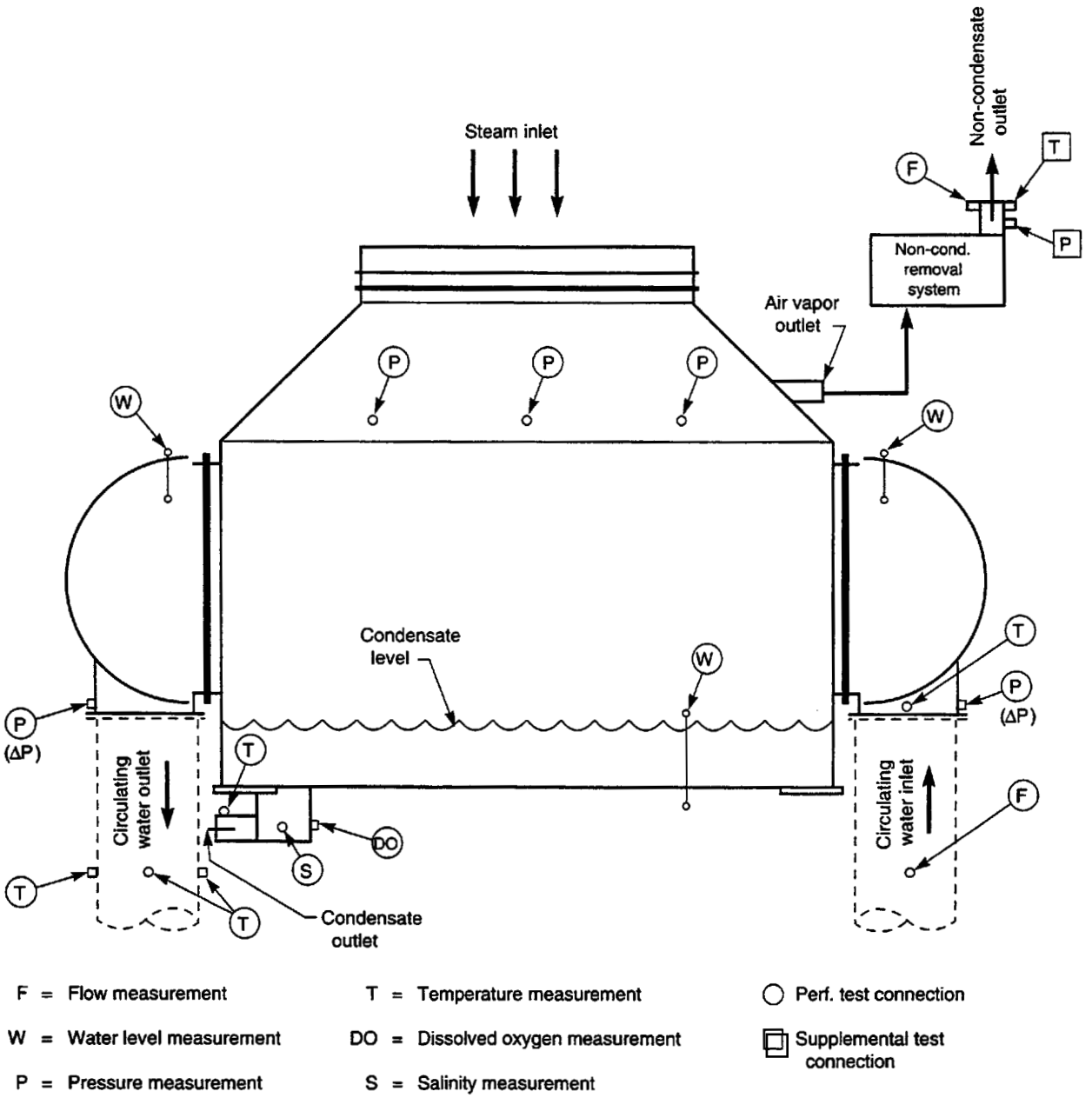

FIG. 4.1 LOCATION OF CONDENSER TEST POINTS

Copyright ASME International
Provided by IHS under license with ASME
No reproduction or networking permitted without license from IHS
Not for Resale

diate or high-pressure shells shall be measured in accordance with procedures described in para. 4.3.3.

4.2.4 Two-Pass Surface Condensers. Test points shall be generally the same as those for the single-pressure condenser. No measurements are required at the return waterbox except for the inlet temperature required for the tube bundle fouling test of tubes in the second pass.

4.3 INSTRUMENTATION AND METHODS OF MEASUREMENT

4.3.1 Condenser Pressure

4.3.1.1 Measurement Locations. Condenser pressure shall be measured at least 1 ft and no more than 3 ft above each tube bundle. A tube bundle is considered to be all tubes connected to a single-inlet waterbox. For single-shell and multiple-shell condensers, there shall be at least three measurement points per tube bundle in each shell. For single-shell multipressure condensers, there shall be at least two pressure measurement points per bundle in each compartment. If tube bundles are arranged one on top of the other, measurement points need only be provided for the uppermost bundle. Where three measurement points per bundle are required, they shall be located lengthwise near the quarter-points of the tube bundle as shown in Fig. 4.1. Where two measurement points per bundle are required, they shall be located lengthwise near the third-points of the tube bundle. In either case, the lateral position of the measurement points shall be as close to the lateral midpoint of the bundle as is practical. Care should be taken to avoid locating the measurement points in areas which may be influenced by unusually high steam velocities or by local separation zones formed by obstructions in the condenser neck.

4.3.1.2 Primary Pressure Sensing Elements. For conduits where the walls are parallel to the direction of flow, wall static pressure taps may be located in the conduit, following the recommendations given above for lengthwise placement. The static pressure taps shall conform to the requirements of Subsection 4.1 of PTC 19.2. [4] In particular, care must be taken to ensure that no obstructions exist in the vicinity of the taps, and that the taps themselves are smooth and free of burrs.

Where wall static pressure taps cannot be used, basket tips or guide plates should be located in the interior of the conduit according to the general directions given in para. 4.3.1.1. The basket tips shall be constructed as shown in Fig. 4.2, and shall be installed at an angle between 30 and 60 deg. to the mean flow direction. Alternatively, the construction shown for turbine exhaust pressures in ASME PTC 6 [4] can be used. Guide plates shall be constructed as shown in Fig. 4.3, and should be oriented so that the steam flow is parallel to the guide plates, as shown in the figure. Pressure sensing piping for the pressure measurement shall conform to the general requirements of Subsection 4.3 of PTC 19.2. [4] In particular, care should be taken to ensure that all piping and connections are air- and steam tight, connected by the most direct practical route, and pitch continuously downward from the primary sensing element to the pressure measurement device. Air bleeds shall be incorporated to allow for purging any water pockets from the piping. The gauges shall be mounted so as to be free from excessive vibration.

Each pressure measurement point may be provided with a dedicated pressure measurement device, or manifolds may be used to switch a single pressure measurement device to several measurement points. Care must be taken to ensure that the manifold provides vacuum-tight isolation of each measurement point, and that it is also purged of any water pockets. Manifolds shall not be used as a means to average pressure readings by connecting several measuring points to the same pressure measurement device simultaneously.

4.3.1.3 Pressure Measurement. Pressure measurement shall have a maximum uncertainty of ±0.01 in. Hg. Mercury manometers are not recommended for use in this Code, due to the environmental and operation hazards they present in case of an accidental spill of the mercury. Electronic absolute pressure transducers are recommended, provided they are calibrated before and after the test program using NIST-traceable standards in accordance with the general procedures given in Section 2 of PTC 19.2. [4]

4.3.2 Cooling-Water Inlet Temperature

4.3.2.1 Location of Measurement Points. Because the cooling water at the condenser inlet is generally well mixed, only one temperature measuring device is usually necessary in each cooling-water inlet conduit. At an installation where there is concern about adequate inlet cooling-water mixing, the multiple-point measurement procedure described in para. 4.3.3 should be followed. Measure-

Copyright ASME International
Provided by IHS under license with ASME
No reproduction or networking permitted without license from IHS
Not for Resale

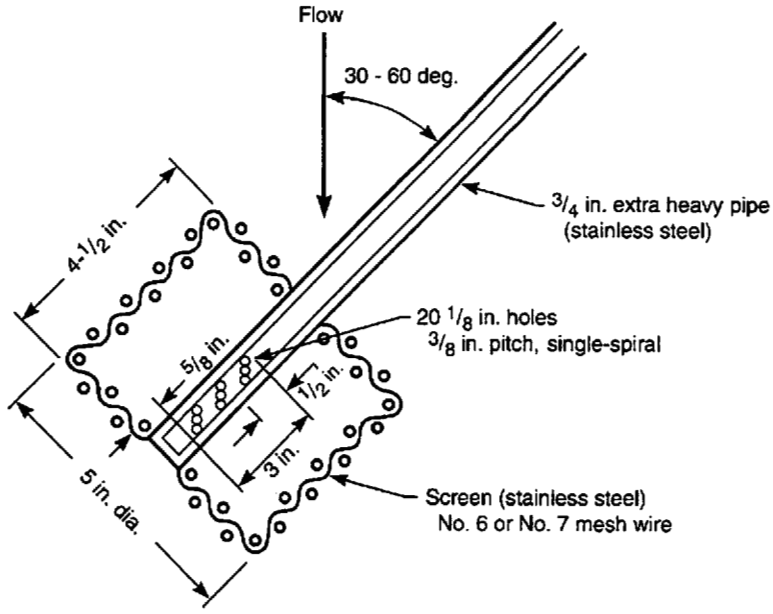

FIG. 4.2 BASKET TIP

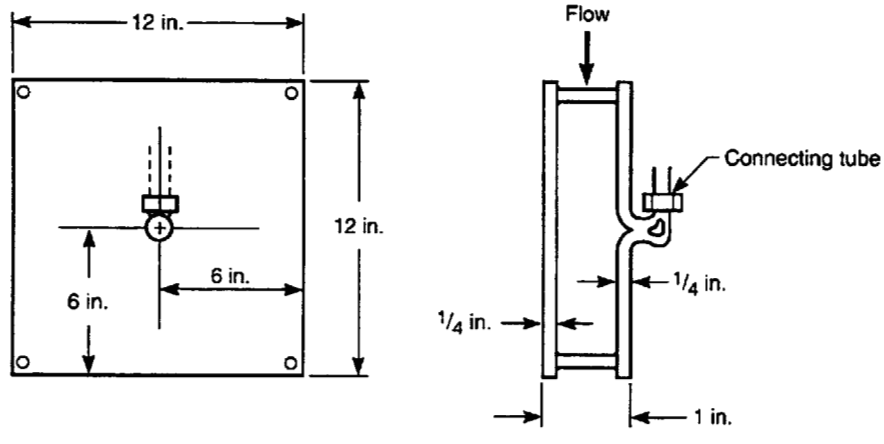

FIG. 4.3 GUIDE PLATE

Copyright ASME International
Provided by IHS under license with ASME
No reproduction or networking permitted without license from IHS Not for Resale

ments may be taken by inserting a temperature measuring device directly into the flow or from a thermowell which extends at least 6 in. into the flow (but no farther than the midpoint if the pipe diameter is less than 12 in.). If a well is used, it should be clean and filled with a suitable heat transfer liquid, such as glycol, and packing should be used around the probe to minimize heat exchange with the environment.

If a single point measurement is used, the measurement may be made either at the inlet pipe or in the inlet waterbox.

4.3.2.2 Instruments. Inlet temperature measurements shall be made with instruments having an accuracy of at least ±0.1°F. Several instruments capable of achieving this accuracy are suitable for use in condenser testing, such as resistance-temperature devices (RTDs), thermocouples (TCs), thermistors, and liquid-in-glass thermometers. Mercury thermometers are not recommended because of the potential environmental hazards posed by the mercury in case of breakage. The general procedures given in PTC 19.3 [4] should be followed.

Thermometers, if used, should be of the total immersion type with etched stems. Thermometers should have clearly readable graduations of 0.1°F. If the thermometer was calibrated for total immersion, an emergent stem correction factor as described in PTC 19.3 [4] should be applied. The thermometer should be isolated from heat sources, and be well illuminated. The thermometer should be inspected before and after the tests to ensure that it is in good physical condition, with no breaks, cracks, or liquid separation.

Type E thermocouples are recommended for the temperature range usually encountered at normal cooling-water temperatures. Continuous leads from the measuring tip to the thermocouple readout must be provided to avoid errors due to thermally induced EMF at splice junctions.

One hundred–ohm platinum RTDs are also recommended. Any thermistor with a nominal impedance of greater than 1000 ohms at 32°F is acceptable. For RTDs and thermistors, either a three- or four-wire measurement is acceptable. The four-wire method is recommended, although the three-wire method may be used providing that the required measurement uncertainty can be achieved. If the three-wire method is used, all RTD leads must be continuous back to the measuring device to avoid errors due to unequal splice resistance. This is not a requirement with the four-wire method or with thermistors.

4.3.2.3 Calibration. All temperature measuring devices shall be calibrated to within ±1°F using NIST-traceable standards following the general procedures given in PTC 19.3. [4] If either thermocouples or three-wire RTDs are used, calibration must include the lead wires. A minimum of five calibration points covering the expected range of temperatures shall be taken.

4.3.3 Cooling-Water Outlet Temperature

4.3.3.1 Location of Measurement Points. The measurement of outlet temperature is more difficult than inlet temperature because of the possibility of non-uniform temperatures in the outlet pipe arising from uneven heat transfer rates in the tube bundle.

If possible, measurement of the discharge temperature should be made far downstream from the condenser where the discharge is well mixed and the temperature is uniform. This location is acceptable if the cooling-water discharge from the unit under test does not mix with any other significant flows, and if it can be shown that the heat loss from the discharge pipe to the environment is less than 0.2% of the condenser duty, and if it can be determined that no stratification exists. The latter requirement can be met by making at least five temperature measurements along single vertical traverse, and verifying that there are no temperature differences greater than 0.2°F or 1% of the average temperature rise across the condenser, whichever is greater. The temperature measurement for testing can be made by either inserting a probe directly into the flow, or by using a thermowell as described in para. 4.3.2.

If an acceptable, well-mixed downstream location cannot be found, then the outlet temperature can be determined from an array of temperature measurements at each outlet pipe at a suitably convenient location. One temperature measurement shall be made for every 1.5 sq ft of conduit flow area providing the measurement grid consists of at least six points, and no more than 18 points are required. These points shall be taken at the centers of equal areas and shall be averaged arithmetically with equal weight. In the case of a circular conduit, measurements shall be along at least three full-diameter, equally spaced traverses, with measurements made at concentric circles satisfying the equal area requirement. In a rectangular conduit, any suitable equal-area positioning scheme may be used. The temperatures may be taken either by traverse or by means of a fixed array of temperature probes. Thermowells

Copyright ASME International
Provided by IHS under license with ASME
No reproduction or networking permitted without license from IHS Not for Resale

will not provide sufficient spatial resolution to meet the requirements of this paragraph.

4.3.4 Cooling-Water Flow. Cooling-water flow determination is required for interpretation of waterside pressure drop data, for computation of tube water velocity, and for determination of the heat load on the condenser (condenser duty) by the direct method. The following methods of cooling-water flow measurement in the large conduits typically found in a central generating station steam condenser are acceptable for the purposes of this Code and are capable of providing an uncertainty of ±1–2% when properly implemented:

(a) velocity traverse;
(b) tracer dilution;
(c) differential producer;
(d) ultrasonic time-of-travel;
(e) energy balance.

Considerations concerning the application of these methods to steam condensers are covered in this Section. The cooling-water flow determination should be made concurrently with the heat transfer test.

4.3.4.1 Velocity Traverse Methods. Velocity traverse methods are generally most applicable to the measurement of flow in large conduits in which the size of the probe will not affect the measured flow. *Fluid Meters,* Chapter I–7, describes the general considerations for acceptable velocity traverse methods. [7] For the purposes of PTC 12.2 [4], the Fechheimer and Keil Pitot-static type probes and the insertion-type fiber-optic laser Doppler velocimeter (LDV) are explicitly recommended, although other instruments which meet uncertainty requirements may be used. If the Fechheimer probe is used, it is recommended that the directional-sensing capabilities of the probe be used to determine the local flow angle, and that this flow angle be incorporated into the flow determination. If the LDV probe is used, it should be oriented so that it picks up the component of flow parallel to the pipe axis.

Pitot-static and other non-LDV type probes shall be inspected and calibrated before and after the test by a hydraulic laboratory to an uncertainty of ±1% using standards traceable to the NIST. The post-test calibration requirement may be waived if inspection reveals no damage to the probe. A deviation of more than 1% between the pretest and post-test calibrations shall be cause for investigation. Calibrations shall cover the range of Reynolds numbers (based on probe diameter) expected in the velocity measurements. For an LDV probe, calibration of the LDV processing electronics against an NIST-traceable frequency standard shall be conducted both before and after the testing program.

Differential pressure measuring devices used for Pitot-static type measurements shall be calibrated before and after the test to an accuracy of at least ±0.25% of the maximum differential pressure expected. Mechanical gauges, manometers, and electronic differential pressure transducers are acceptable, so long as the stated accuracy requirements are met.

The velocity probe should be inspected for damage periodically during testing. If any damage to the probe is noted, all measurements made since the previous inspection shall be retaken with another calibrated probe. For this reason, it is recommended that at least two calibrated probes be available for testing.

A velocity probe may experience vibration under certain flow conditions. For non-LDV type probes, if such vibration is detected,the cause of the vibration shall be corrected. For non-LDV probes, measurements taken under conditions of significant probe vibration shall be considered invalid. Indicators of probe vibration include a sharp change (usually a rise) in the probe differential when the probe position is changed slightly, physical vibration of exposed part of the probe, or a relatively sudden onset of a high level of periodic pressure pulsations.

At least 10 diameters of straight, unobstructed piping shall exist upstream and 5 diameters downstream of the measuring station. Traverse shall be taken along at least three equally spaced diameters. The traverse locations shall follow the Chebyshef weighing scheme described in Chapter I–7 of *Fluid Meters* [7], with a minimum of ten points along each diameter. An example of acceptable traverse points is shown in Fig. 4.4.

4.3.4.2 Tracer Dilution Methods. Tracer dilution methods are particularly applicable to the measurement of flow in large conduits. Although no formal standard on their use currently exists, the method is discussed in Chapter I–9 of *Fluid Meters* [7] under the heading Method of Mixtures. If this technique is used, the parties to the test shall agree upon the details of implementation, provided that the guidelines outlined here are followed.

A key requirement of the tracer is that it exhibit minimal tendency to adsorb onto organic and inorganic surfaces. Recent applications of this technique have most often used Rhodamine WT fluorescing dye as the tracer, although any dye which can be shown to be conservative (not subject to adsorption or other loss mechanisms) is acceptable. The dye

Copyright ASME International
Provided by IHS under license with ASME
No reproduction or networking permitted without license from IHS Not for Resale

Chebyshef Distribution
Relative radius
(a) 0.2891
(b) 0.5592
(c) 0.7071
(d) 0.8290
(e) 0.9572
All points weighed equally

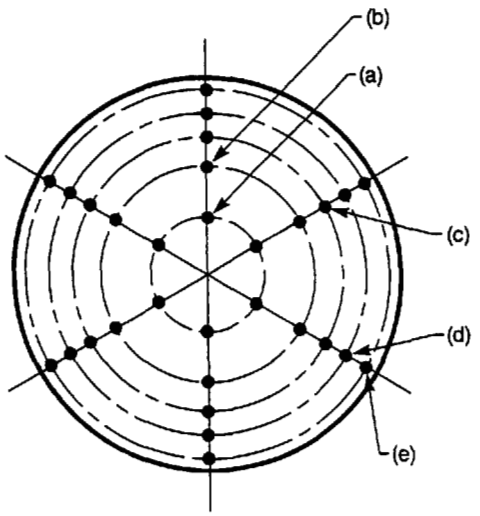

FIG. 4.4 RECOMMENDED VELOCITY TRAVERSE LOCATIONS

concentration is measured using a calibrated precision fluorometer. General considerations relating to the application of Rhodamine WT or similar tracers may be found in *Flow Measurements in Sanitary Sewers.* [8] In addition to the general considerations outlined in *Fluid Meters* [7] and *Flow Measurements in Sanitary Sewers* [8] the precautions discussed below should be observed.

The flow should be free of any chemicals or silt concentrations which may affect the detectability of the tracer. Chemical treatment which is introduced into the flow before the sampling point should be shut off before the test. In the case of a closed-cycle system, a prolonged period of no treatment may be required to purge the cooling system of treatment chemicals. Chlorine, in particular, may affect Rhodamine dyes.

Complete mixing of the tracer with the flow must be achieved for an accurate flow measurement. As a general guideline, at least 100 diameters of pipe should exist between the injection and sampling points, although this distance may be substantially

Copyright ASME International
Provided by IHS under license with ASME
No reproduction or networking permitted without license from IHS Not for Resale

reduced by the presence of flow disturbances such as pumps, elbows, valves, or orifices. The presence of complete mixing at the sampling cross-section shall be determined by traverse before testing by withdrawing samples at nine equally spaced points along 1 diameter at the sampling cross-section and verifying that the concentrations at all points agree to within ±1%. This verification shall be conducted within ±25% of the flow at which the condenser tests are to be run.

Injection of dye may be through a manifold or at a single point in the flow, so long as complete mixing of the dye at the sampling point is verified as described above.

The dye concentration must reach steady state at the sampling point before data to be used in the flow determination are taken. This determination shall be made by continuously monitoring the tracer concentration at the sampling cross-section.

Care must be taken to ensure that no flow is introduced or removed between the injection and sampling stations. It is not sufficient to simply account for these flows, since a small inflow or outflow can lead to a large measurement error. An exception is that any outflows between the section at which complete mixing has been verified and the sampling station will not affect the measured flow.

Precautions must be taken if the possibility exists that the injected dye may recirculate to the injection site. In the case of a time-varying flow, such as a tidally influenced estuary, it is necessary to demonstrate, by measurement before the start of the test, that no dye recirculation exists. In the case of a closed-cycle cooling system, it is necessary to demonstrate, by measurement, that any previously injected dye is thoroughly mixed throughout the cooling-water system before a test can begin. As a rule, about five cycle-recirculation times are required for complete mixing to be achieved (the cycle-recirculation time is the total volume of water in the cooling-water system divided by the cooling-water flow).

It is desirable for both tracer injection and sampling to be on either the inlet-water or the outlet-water side of the condenser. In this case, either continuous sampling or grab samples are acceptable. If injection and sampling occur on opposite sides of the condenser, extreme care must be taken to account for temperature effects. Grab samples may be brought to a common temperature before analysis. This is the preferred method. In the case of a continuous sampling system, temperature compensation can be accomplished by measuring the injection and sampling temperatures and correcting the readings to a common temperature. For Rhodamine WT dye, the temperature corrections may be found from the following equation (Smart and Laidlaw [9]):

$$F_s = F_\theta^{-0.027(T_s - T)}$$

where F_s = fluorescence at standard temperature T_s, and F_θ is the measured fluorescence at temperature T.

The tracer injection apparatus shall be calibrated for injection flow before and after the test program. The uncertainty of the injection rate shall be ±0.5% or better.

The fluorometer (or other concentration measurement instrument) shall be calibrated before and after the test program. Calibrations shall be performed at a minimum of three concentrations bracketing the expected dye concentration. Instrument uncertainty shall be no more than ±1%.

Periodic field calibration of the tracer injection apparatus and the fluorometer during testing is highly recommended to ensure data integrity.

4.3.4.3 Differential Producers. Differential producers which are accepted by this Code include the orifice plate, the flow nozzle, and the venturi meter. These devices will be most applicable to smaller condensers, i.e., those with inlet piping less than about 3 ft in diameter.

The installation of the differential producer shall follow the requirements of *Fluid Meters* [7] or ASME MFC-3M [11] particularly with regard to the length of upstream and downstream piping, construction and finish of the flow element, and location and finish of the piezometer taps. The flow element together with any flow conditioning devices immediately upstream of the element shall be calibrated as a unit before and after the testing by an hydraulic laboratory to an uncertainty of ±1% or better using NIST-traceable methods. The post-test calibration requirement may be waived if a post-test inspection reveals no damage or deposits that would affect flow meter accuracy. A deviation of more than 1% between the pretest and post-test calibrations shall be cause for investigation.

4.3.4.4 Ultrasonic Time-of-Travel. In all conduits, particularly large ones, flow may be measured using the multiple-path, time-of-travel type ultrasonic flow measurement method. The provisions given in PTC 18 [4] under the heading Acoustic Method shall govern the application of this method. Several

Copyright ASME International
Provided by IHS under license with ASME
No reproduction or networking permitted without license from IHS Not for Resale

significant features are summarized here. A minimum of four parallel chordal paths shall be provided, regardless of the size of the conduit. The metering section shall be preceded by at least 10 diameters and followed by at least 3 diameters of straight pipe. The time-of-travel instrumentation shall be tested at zero flow before and after the test to ensure proper and accurate operation.

Because this method may be adversely affected by the presence of silt and other particulates or air bubbles in the flow, it should be verified that the source water is suitably clean before the metering system is installed.

Since ultrasonic time-of-travel systems are relatively difficult and expensive to install, it is recommended that provision for its installation in the cooling-water piping be made during design and construction of the cooling system.

4.3.4.5 Energy Balance Methods. In the energy balance method, an energy balance on the turbine-generator cycle is performed in order to determine the rate at which heat is rejected to the condenser (condenser duty) in the low-pressure exhaust steam. As described in para. 3.16.2, cooling-water flow can then be determined from the condenser duty and the difference between the inlet and outlet waterbox temperatures. One advantage of this method is that the condenser duty is determined directly.

Determination of the condenser duty by the energy balance method shall be performed according the applicable sections of PTC 6 [4] for the testing of steam turbines. Because of the complexity of this test, it is recommended that the condenser be tested at the same time as the steam turbine. The overall uncertainty of the condenser duty measurement will have to be determined for each case based on the cycles, procedures, and instrumentation used.

4.3.5 Non-condensible Flow. Non-condensible flow shall be measured by methods that have been shown to be accurate. This Code recommends the use of an orifice plate located at or near the discharge of the evacuating apparatus. The orifice plate shall meet the specifications described in ASME-MFC-3M [11] (see also Subsection 4.1) or PTC 19.5. [4] Provided that all specified installation criteria are followed, no calibration of the orifice meter is required. Particular attention should be paid to ensuring that adequate lengths of straight pipe upstream and downstream of the orifice are available, that the pressure taps are properly located and finished, and that the pressure piping to the differential pressure gauge is of the proper diameter and is sloped continuously downward from the gauge to the orifice, to avoid accumulation of water. Gauge pressure and temperature of the discharge shall be measured either upstream or downstream of the orifice plate.

The differential pressure instrument, static pressure gauge, and the temperature measuring device shall be calibrated before and after the tests. The differential pressure instrument attached to the orifice shall be calibrated to an uncertainty of ±1% of the expected orifice differential. The static pressure device shall be calibrated to an uncertainty of ±1 psi. The temperature measuring device shall be calibrated to an uncertainty of ±1°F.

The flow shall be determined according to the equations for gas flow through an orifice as given in Part II–III of PTC 19.5 [4] or ASME MFC-3M. [11] Gas properties, such as the expansion factor, density, and viscosity, shall be determined assuming that the orifice flow consists of saturated air. For convenience, simplified equations yielding sufficient accuracy for purposes of this paragraph are given in Appendix H.

4.3.6 Hotwell Level. The condenser hotwell shall be provided with a sight glass, graduated in at least 1-in. increments. The level of water in the hotwell shall be monitored and remain within design limits for the duration of the test.

4.3.7 Waterbox Level. Waterbox level shall be monitored throughout the tests to ensure that all waterboxes are kept full. A means for verifying that the condenser waterboxes are full of water should be used during the test period.

4.3.8 Waterbox Differential Pressures. Differential pressure gauges shall be provided to measure the pressure drop between the inlet and outlet waterbox nozzles. There shall be at least one differential gauge for each parallel water circuit in the condenser. The gauges shall be calibrated before and after the test to ±1% of the maximum expected differential. Mechanical gauges or electronic differential pressure gauges are acceptable. Mercury manometers are not recommended due to the operational and environmental hazards posed should the mercury be inadvertently blown from the manometer.

4.3.9 Dissolved Oxygen

4.3.9.1 General. This method describes the measurement of the dissolved oxygen (DO) concentration of the condensate. Prior to conducting the measurements described in this Section, the conditions for

Copyright ASME International
Provided by IHS under license with ASME
No reproduction or networking permitted without license from IHS Not for Resale

testing in accordance with Subsection 3.11 of this Code must be achieved.

4.3.9.2 Sample Extraction. Sampling of the condensate for DO shall be performed by extracting condensate from the condensate outlet piping as close as possible to the hotwell but prior to the condensate pump, and prior to addition of any oxygen scavenging chemicals (see Fig. 4.1). Extraction shall be made using a pump. Care must be taken to avoid any air ingress in the sample line from the hotwell outlet piping to the pump. Samples shall be measured in each hotwell outlet which is in use.

The sample nozzle should extend into the condensate outletpiping 4 in. or 25% of the pipe diameter, whichever is less. Metal tubing shall be used to connect the sample nozzle to the DO probe, and to connect the DO probe to the sampling pump. The pump effluent may be routed back to the condenser under vacuum, in order to reduce the pump head pressure.

4.3.9.3 Sample Conditioning. Samples for continuous flow oxygen analyzers should be at flow rates and temperatures recommended by the instrument manufacturers. Flow and temperature shall be held constant during the tests.

If sample tubing is used to transport the sample to a remote location, the tubing shall be sized to maintain a minimum velocity of 5 to 6 ft/sec.

Prior to the tests, sample lines and instrumentation shall be flushed for a sufficient time to ensure that lines are free from air bubbles or pockets.

4.3.9.4 Oxygen Analysis. Portable or in-line oxygen analyzers using membrane-covered galvanic or polarographic oxygen sensors are the recommended method of analysis. The instrument used shall have a detection limit of less than 1.0 ppm, with a maximum error of ±1.0 ppm.

The instrument shall be calibrated before and after the test. If calibration is performed using atmospheric oxygen, the analyzer shall be given sufficient time to reach equilibrium with the condensate DO level.

It is recommended that the instrument analysis be verified by a wet chemistry technique prior to running the tests per PTC 12.3. [4]

If the oxygen sensor fouls from condensate contaminants, the titrimetric method shall become the recommended method of analysis. The sample shall be removed in the same manner as described in para. 4.3.9.2, with the sample being collected at the discharge of the extraction pump.

4.3.10 Condensate Temperature. Condensate temperature measurements shall be made in accordance with the general procedures described in para. 4.3.2. The thermowells should be located upstream of the condensate pump.

4.3.11 Saline/Brackish Water Concentration. Salinity measurements shall be made by using Method 2520 for "Salinity" from Standard Methods for the Examination of Water and Wastewater. [6]

4.3.12 Tube Bundle Fouling (Cleanliness)

4.3.12.1 Introduction. This Code requires a determination of the condenser tube bundle fouling. The measurement is necessary in order to adjust the condenser overall heat transfer coefficient test results to design or guarantee conditions. The fouling test consists of a measurement of the outlet temperatures of sets of two adjacent tubes. One of the tubes of each set remains in the as-found fouled condition while the neighboring tube has either been cleaned or replaced with a new tube. As required, the condenser has just had a general cleaning. Otherwise, the tube pair experience identical heat transfer conditions, i.e., steam pressures, cooling-water flow rates, and velocities. The outlet temperature measurements provide a comparison of the heat transfer rates of the tube pairs, and, consequently, the bundle fouling resistance.

4.3.12.2 Measurement Locations. The number of pairs of tubes selected for the fouling test shall be one per 2000 tubes per tube bundle, but not fewer than four pairs or more than 16 pairs per bundle. The pairs shall be located at the approximate centroids of equal tube sectors within the tube bundle pattern. However, it is not recommended to place pairs within three tube rows of the bundle periphery due to the atypical conditions there. The number of pairs per number of tubes shall be the same regardless of whether the condenser is a single-pass, two-pass, or multipressure type.

4.3.12.3 Test Conditions and Measurements. The test shall be conducted immediately before, during, or after the condenser heat transfer test, as is convenient. Besides the outlet temperature, the cooling-water flow, inlet temperatures, and condenser pressures shall be measured. The measurement, calibration, test conditions, and limitations of these parameters shall comply in all respects to all the related requirements listed in this Section and Table 3.1. A minimum of four sets of readings spanning 30 min shall constitute a test.

Copyright ASME International
Provided by IHS under license with ASME
No reproduction or networking permitted without license from IHS Not for Resale

4.3.12.4 Outlet Temperature Installation. A temperature sensor shall be installed at the outlets of each of the tubes in a manner that ensures tube blockage is minimized and an accurate discharge temperature is measured. The installation shall be sufficiently rugged and suitably waterproofed to withstand the hydraulic forces and temperatures of the discharged cooling water. The temperature sensor lead wire from the sampled tubes shall be routed and secured between the tube holes on the outlet tube sheet. They shall be bundled and fed out through a new or existing waterbox penetration to the readout.

In the case of two-pass or multipressure condensers in separate shells, tube pairs located in the bundle subsequent to the first shall have an inlet temperature measurement similar to that described for the outlet sensor.

Since the variety of installation situations will be numerous, only general guidance on affixing the sensor to the tube sheet can be provided, as follows.

(a) If an outlet tube stub exists, plastic collars can be utilized as shown in Appendix G.

(b) Direct attachment to the tubesheet is permissible as long as the sensor extends into the flow.

(c) Attachment of a suitable minimal blockage fixture into the tube interior that holds the sensor is also permitted if it can be demonstrated the total added blockage is less than 5% of the internal tube flow area.

4.3.12.5 Tube Temperature Rises. Tube temperature rises for the fouling tests shall be measured in general accordance with the procedures described in this section. RTDs or thermocouples may be used, provided that the uncertainty of the temperature measurement system is at most ±0.1°F. If thermocouples are used, it is recommended that a direct differential temperature measurement setup be used. If RTDs are used, it is highly recommended that the pairs of RTDs which will be used on the monitored tubes be calibrated together, in order to minimize the effect of any bias errors in the calibration on the determination of the temperature difference between the paired RTDs. Provision shall be made for calibration of the temperature measurement devices before and after the fouling test, over the expected range of temperature differences and within 5°F of the expected inlet-water temperature. Following the fouling test, all instrumented tubes shall be inspected to ensure that they are clear and have not been influenced by blockage or any other factor (other than tube fouling) which may affect the results.

Copyright ASME International
Provided by IHS under license with ASME
No reproduction or networking permitted without license from IHS Not for Resale

SECTION 5 — COMPUTATION OF RESULTS

5.1 BASIC HEAT TRANSFER RELATIONS

This Section defines all the computations required to obtain results from the various types of condenser tests addressed in the Code. For both single-pass and two-pass condensers, these include the heat transfer coefficients, adjustments to design conditions, fouling resistance, subcooling, condensate dissolved oxygen, tubeside pressure drop, non-condensible gas flow, and measurement uncertainty. Though the basic equations are the same, multipressure condenser performance assessments are slightly different as is described in para. 5.2.8. Note that when the complete equations are given, U.S. Customary Units are assumed.

5.1.1 Condenser Heat Load. The condenser heat load shall be computed according to the following equation:

$$Q^+ = W^+ * C_p^+ * (T_2^+ - T_1^+) \qquad (5.1.1)$$

5.1.2 Overall Heat Transfer Coefficient. The overall heat transfer coefficient at the test conditions shall be computed as follows:

$$U^+ = \frac{Q^+}{A_o * LMTD^+} \qquad (5.1.2)$$

where

$$LMTD^+ = \frac{(T_2^+ - T_1^+)}{ln\left(\frac{(T_S^+ - T_1^+)}{(T_S^+ - T_2^+)}\right)} \qquad (5.1.3)$$

The saturated steam temperature T_s^+ corresponding to pressure P_s^+ is determined from the *ASME Steam Tables.* [2]

5.1.3 Tubewall Resistance.

$$R_m^+ = \frac{d_o}{24 * k_m^+} * \ln\left(\frac{d_o}{d_i}\right) \qquad (5.1.4)$$

and

$$R_m^+ = \frac{D_o}{2k_m} \ln\left(\frac{D_o}{D_i}\right) \qquad (5.1.5)$$

for metric units.

5.1.4 Tubeside Resistance. The tubeside thermal resistance calculation is taken from Rabas and Crane. [1]

$$R_t^+ = \left[.0158 \frac{k^+}{D_i} (Re^+)^{.835} (Pr^+)^{.462}\right]^{-1} \qquad (5.1.6)$$

where Re is the Reynolds number $\rho vD3600/\mu$ and Pr is the Prandtl number $c_p\mu/k$. This equation is simplified for calculation in U.S. Customary Units:

$$R_t^+ = 0.0451 \left(\frac{\mu^{+0.373}}{k^{+0.538} * \rho^{+0.835} * c_p^{+0.482}}\right) * \frac{d_i^{0.165}}{v^{+0.835}} \qquad (5.1.7)$$

where

$$v^+ = \frac{w^+}{25 * \rho^+ * \frac{N}{n} * \frac{\pi}{4} * (d_i)^2} \qquad (5.1.8)$$

Circulating water fluid properties are evaluated at the average bulk water temperature, T_B, which is defined as

$$T_B^+ = 0.5 * (T_2^+ + T_1^+) \qquad (5.1.9)$$

5.1.5 Fouling Resistance. The fouling resistance is determined from the comparison of adjacent tube

Copyright ASME International
Provided by IHS under license with ASME
No reproduction or networking permitted without license from IHS
Not for Resale

method. For j pairs of tubes, the fouling resistance, R_f, is determined by:

$$R_f^+ = \frac{1}{j}\sum_{i=1}^{j} R_{fj}^+ \qquad (5.1.10)$$

where the fouling resistance for each tube pair is determined from:

$$R_{fj}^+ = \frac{A}{nw^+ c_p^+}\left[\frac{1}{\ln\left(\frac{T_s^+ - T_{1,f,i}^+}{T_s^+ - T_{2,f,l}^+}\right)} - \frac{1}{\ln\left(\frac{T_s^+ - T_{1,c,i}^+}{T_s^+ - T_{2,c,l}^+}\right)}\right] \qquad (5.1.11)$$

5.1.6 Shellside Resistance. The shellside resistance at the test conditions is determined by difference as follows:

$$R_s^+ = \frac{1}{U^+} - R_m^+ - R_t^+\left(\frac{d_o}{d_i}\right) - R_f^+ \qquad (5.1.12)$$

5.2 CONDENSER PRESSURE DEVIATION RESULTS CALCULATIONS

It is unlikely that the conditions during a performance test will ever exactly match the design conditions. As a result, comparison of the measured condenser shell pressure to the design value is not meaningful. Instead, it is first necessary to adjust the test results from the test conditions to the design reference conditions. The correction procedures which follow are based on adjusting the test calculated heat transfer resistances for differences between the test and design conditions. These values are then used to compute the adjusted overall heat transfer coefficient and the test-adjusted condenser steam pressure at the design reference conditions.

The design reference conditions are determined from manufacturer's data. Calculated values, not included with the data, are computed using the same procedures as developed in Subsection 5.1, but substituting the design values for the test values.

5.2.1 Tubewall Resistance. The tubewall resistance is a constant which is dependent only on the tubewall thickness and material. Accordingly,

$$R_m^* = R_m^+ \qquad (5.2.1)$$

5.2.2 Tubeside Resistance. The tubeside thermal resistance is calculated at the design conditions as follows:

$$R_t^* = \left[.0158\,\frac{k^*}{D_i}(Re^*)^{.835}(Pr^*)^{.482}\right]^{-1} \qquad (5.2.2)$$

This equation is simplified for calculation in U.S. Customary Units:

$$R_t^* = 0.0451\left(\frac{\mu^{*\,0.373}}{k^{*\,0.538} * \rho^{*\,0.835} * c_p^{+\,0.482}}\right) * \frac{d_i^{0.165}}{v^{*\,0.835}} \qquad (5.2.3)$$

where

$$v^* = \frac{w^+}{25 * \rho^* * \frac{N}{n} * \frac{\pi}{4} * (d_i)^2} \qquad (5.2.4)$$

Circulating water fluid properties are evaluated at the bulk water temperature, T_B, which is defined as

$$T_B^* \doteq 0.5 * (T_2^* + T_1^*) \qquad (5.2.5)$$

5.2.3 Fouling Resistance. The manufacturer's design data usually express the fouling resistance in terms of a cleanliness factor. If the design reference condenser pressure is based on a cleanliness factor of 1.0, the design fouling resistance, R_f^*, is equal to zero. For any other value of cleanliness factor, the resulting fouling resistance is determined as follows:

$$R_f^* = \frac{(1 - c_f^*)}{U^*} \qquad (5.2.6)$$

where

$$U^* = \frac{Q^*}{A_o * LMTD^*} \qquad (5.2.7)$$

$$LMTD^* = \frac{(T_2^* - T_1^*)}{\ln\left(\frac{T_S^* - T_1^*}{T_S^* - T_2^*}\right)} \qquad (5.2.8)$$

Copyright ASME International
Provided by IHS under license with ASME
No reproduction or networking permitted without license from IHS
Not for Resale

The saturation steam temperature T_S^* corresponding to pressure P_S^* is determined from the *ASME Steam Tables.* [2]

5.2.4 Shellside Resistance. The shellside condensing heat transfer is the most complex component in the evaluation of a steam surface condenser. Numerous correlations of the Nusselt equation have been developed for the film coefficient for various condensing situations. These correlations are based on specific condensing conditions requiring a detailed knowledge of the shell and tube nest geometries and the condensing conditions and resulting in significantly different prediction values of the heat transfer coefficient. As a result, the test value of the shellside resistance is determined in para. 5.1.6 based on the difference between the test calculated overall heat transfer coefficient and sum of the calculated values for the other heat transfer resistances.

In order to adjust the test shellside resistance value to the design condition, some formulation is necessary to correct for the difference in condensate film temperature between design condition and test condition. Because this requires an adjustment over a limited range of conditions, rather than a prediction of an absolute value of the shellside resistance, very precise predictions are not required. The Nusselt equation used herein provides for film condensation on the outside of horizontal tube bundles, and is expressed as follows:

$$h_s = 0.95 \left(\frac{k^3 \rho^2 g L}{\frac{W_s}{N} \mu} \right)^{1/3} \tag{5.2.9}$$

Noting that

$$R_S = \frac{1}{h_s} \tag{5.2.10}$$

then

$$R_S^o = R_S^+ * \frac{h_s^*}{h_s^+} \tag{5.2.11}$$

Combining equations 5.2.9 and 5.2.11,

$$R_S^o = R_S^+ * \left(\frac{W_S^+}{W_S^*} \right)^{1/3} * \left(\frac{\mu^+}{\mu^*} \right)^{1/3} * \left(\frac{k^*}{k^+} \right) * \left(\frac{\rho^*}{\rho^+} \right)^{2/3} \tag{5.2.12}$$

If the test condition steam flow rate, W_s^+, is not available, the expression W_s^+/W_s^* may be substituted with Q^+/Q^*. The liquid properties are evaluated at the bulk average temperature of the condensate film. This temperature can be approximated as follows:

$$T_F^* = T_s^* - 0.2 * LMTD^* \tag{5.2.13}$$

and

$$T_F^+ = T_s^+ - 0.2 * LMTD^+ \tag{5.2.14}$$

5.2.5 Overall Heat Transfer Coefficient. The overall heat transfer coefficient (OHTC), which is adjusted to the design conditions, is as follows:

$$U^o = \frac{1}{R_m^* + R_t^* \left(\frac{d_o}{d_i} \right) + R_f^* + R_S^o} \tag{5.2.15}$$

5.2.6 Adjusted Test Condenser Steam Pressure. The test condenser steam pressure, which is adjusted to the design reference conditions, is determined using the following procedure:

$$NTU^o = \frac{U^o * A^*}{c_p^* * w^*} \tag{5.2.16}$$

$$T_S^o = \frac{T_2^* - T_1^* * e^{-NTU^o}}{(1 - \theta^{-NTU^o})} \tag{5.2.17}$$

The adjusted steam pressure, P_S^o, corresponding to the saturation steam temperature, T_S^o, as calculated from the above, is determined from *ASME Steam Tables.* [2]

5.2.7 Evaluation of Results/Acceptance Criterion. The difference between the test adjusted and design reference steam pressures is evaluated as follows:

$$\Delta P_S = P_S^* - P_S^o \tag{5.2.18}$$

If the pressure difference is greater than or equal to zero, the condenser performance is satisfactory and considered acceptable. If the pressure difference

Copyright ASME International
Provided by IHS under license with ASME
No reproduction or networking permitted without license from IHS Not for Resale

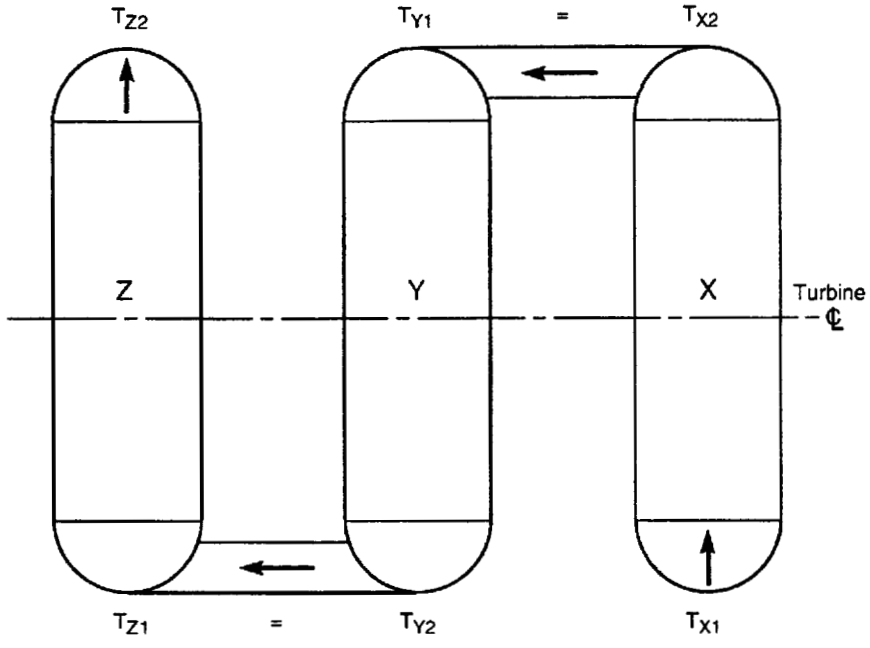

FIG. 5.1 MULTISHELL MULTIPRESSURE CONDENSER

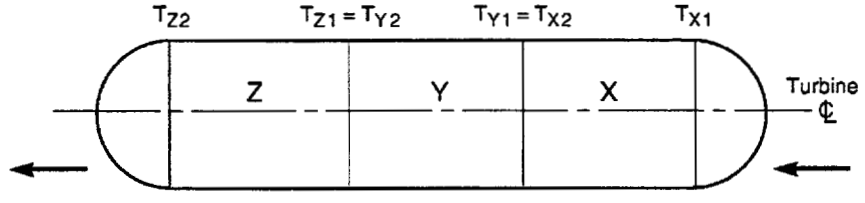

FIG. 5.2 SINGLE-SHELL MULTIPRESSURE CONDENSER

is less than zero, the condenser performance is worse than design and is considered unacceptable.

5.2.8 Multipressure Condensers. Multipressure condenser performance is assessed separately for each pressure compartment. There are two types of multipressure condensers: the multishell multipressure condenser (Fig. 5.1) and the single-shell multipressure condenser (Fig. 5.2).

5.2.8.1 Condenser Heat Load. The turbine exhaust steam flows shall be assumed to be equally divided between each of the multipressure compartments. If other major steam loads are present in a particular compartment, such as from a boiler feed pump turbine, then that estimated value shall be added to the compartment heat load.

For multipressure condensers the cooling-water temperature between compartments cannot be measured due to temperature stratification or inaccessibility. The temperature can be estimated by assuming that the temperature rise is proportional to the heat load in each compartment. The calculation procedure is as follows:

$$\Delta t(\text{measured}) = \Delta T_x + \Delta T_y + \Delta T_z \qquad (5.2.19)$$

Copyright ASME International
Provided by IHS under license with ASME
No reproduction or networking permitted without license from IHS
Not for Resale

where

$$\Delta T_x = (\Delta t)\left(\frac{Q_x}{Q}\right);$$

$$\Delta T_y = (\Delta t)\left(\frac{Q_y}{Q}\right);\ \Delta T_z = (\Delta t)\left(\frac{Q_z}{Q}\right)$$

NOTE: A three-compartment condenser is used for illustration here, but the procedure also applies to two-compartment multipressure condensers.

5.2.8.2 Overall Heat Transfer Coefficient. The overall heat transfer coefficient at the test condition for each compartment is calculated using the method outlined in para. 5.1.2.

5.2.8.3 Tubewall Resistance. The tubewall resistance is calculated the same as in para. 5.1.3.

5.2.8.4 Tubeside Resistance. The tubeside resistance is calculated the same as in para. 5.1.4.

5.2.8.5 Fouling Resistance. The fouling resistance is determined from comparison of adjacent tubes, in the same manner as for a single pressure condenser. For j pairs of tubes, the fouling resistance, R_f, for each pressure compartment is determined by:

$$R_{f,x} = \frac{1}{j}\sum R_{f,x,i}$$

$$R_{f,y} = \frac{1}{j}\sum R_{f,y,i}$$

$$R_{f,z} = \frac{1}{j}\sum R_{f,z,i}$$

or in a multishell multipressure condenser, the cooling-water outlet temperatures from each compartment can be measured and will be used in the calculation of the fouling resistance. For single-shell multipressure condensers, the cooling-water temperature between compartments cannot be measured. These temperatures will instead be estimated using the same procedure as outlined in para. 5.2.8.1.

$$Q = Q_x + Q_y + Q_z$$

$$\Delta t_{f,i}\ (\text{measured}) = \Delta T_{f,x,i} + \Delta T_{f,y,i} + \Delta T_{t,z,i}$$

$$\Delta T_{f,x,i} = (\Delta t_{f,i})\left(\frac{Q_x}{Q}\right)$$

$$\Delta T_{f,y,i} = (\Delta t_{f,i})\left(\frac{Q_y}{Q}\right)$$

$$\Delta T_{f,z,i} = (\Delta t_{f,i})\left(\frac{Q_z}{Q}\right)$$

$$T_{f,2,i} = t_1 + \Delta T_{f,x,i}$$

$$T_{f,3,i} = t_{f,2,i} + \Delta T_{f,y,i}$$

$$T_{f,4,i} = t_{f,3,i} + \Delta T_{f,z,i}$$

where the subscript 4 corresponds to the outlet of the high-pressure compartment.

$$\Delta t_{c,i}\ (\text{measured}) = \Delta T_{c,x,i} + \Delta T_{c,y,i} + \Delta T_{c,z,i}$$

$$\Delta T_{c,x,i} = (\Delta t_{c,i})\left(\frac{Q_x}{Q}\right)$$

$$\Delta T_{c,y,i} = (\Delta t_{c,i})\left(\frac{Q_y}{Q}\right)$$

$$\Delta T_{c,z,i} = (\Delta t_{f,i})\left(\frac{Q_z}{Q}\right)$$

$$T_{c,2,i} = t_1 + \Delta T_{c,x,i}$$

$$T_{c,3,i} = t_{c,2,i} + \Delta T_{c,y,i}$$

$$T_{c,4,i} = t_{c,3,i} + \Delta T_{c,z,i}$$

where the subscript 4 corresponds to the outlet of the high-pressure compartment.

Copyright ASME International
Provided by IHS under license with ASME
No reproduction or networking permitted without license from IHS Not for Resale

$$R_{f,x,i} = \left(\frac{A_x}{wc_p}\right)\left(\frac{1}{\ln\left(\frac{T_{s,x} - T_1}{T_{s,x} - T_{f,2,i}}\right) - \ln\left(\frac{T_{s,x} - T_1}{T_{s,x} - T_{c,2,i}}\right)}\right)$$

$$R_{f,y,i} = \left(\frac{A_y}{wc_p}\right)\left(\frac{1}{\ln\left(\frac{T_{s,y} - T_{f,2,i}}{T_{s,y} - T_{f,3,i}}\right) - \ln\left(\frac{T_{s,y} - T_{c,2,i}}{T_{s,y} - T_{c,3,i}}\right)}\right)$$

$$R_{f,z,i} = \left(\frac{A_z}{wc_p}\right)\left(\frac{1}{\ln\left(\frac{T_{s,z} - T_{f,3,i}}{T_{s,z} - T_{f,4,i}}\right) - \ln\left(\frac{T_{s,z} - T_{c,3,i}}{T_{s,z} - T_{c,4,i}}\right)}\right)$$

5.2.8.6 Shellside Resistance. The shellside resistance for each compartment is calculated the same as in para. 5.1.6.

5.2.8.7 Condenser Pressure Deviation Results Calculation. The condenser pressure deviation results calculation for each compartment is the same as the single pressure condenser, as outlined in Subsection 5.2. The cooling-water temperature between compartments shall be estimated using the same method as outlined in para. 5.2.8.1.

5.3 DEVIATION OF RESULTS CALCULATIONS FOR OTHER PARAMETERS

5.3.1 Tubeside Pressure Drop Deviation Calculations Acceptance Criterion. The test measured tubeside pressure drop is adjusted for differences between the test and design reference water-flow rates as follows:

$$\Delta P_t^o = \Delta P_t^+\left(\frac{w^*}{w^+}\right)^{1.8} \qquad (5.3.1)$$

If the calculated tubeside pressure drop is less than or equal to the design value, this aspect of the condenser performance is satisfactory and considered acceptable. If it is greater than the design value, this aspect of the condenser performance is worse than the design and is considered unacceptable.

5.3.2 Condensate Subcooling Results Calculations

$$\Delta T_s^+ = T_s^+ - T_3^+ \qquad (5.3.2)$$

If the calculated condensate subcooling at test condition is less than or equal to design value, this aspect of the condenser performance is satisfactory and considered acceptable. If it is greater than the design value, the condenser performance is worse than design and is considered unacceptable.

5.3.3 Dissolved Oxygen Calculations Acceptance Criterion. The dissolved oxygen test result shall be determined by averaging the measured dissolved oxygen results at the specified time intervals for each condenser outlet pipe. If the averaged result is greater than the design value for any condensate outlet dissolved oxygen measurement, the condenser performance is worse than design and is considered unacceptable.

5.4 UNCERTAINTY ANALYSIS

To determine if a test conducted in accordance with this Code meets the uncertainty criteria specified in Subsection 1.3, an estimate of the uncertainty in the test results attributable to test measurement uncertainties must be performed as part of the test calculations. This uncertainty analysis shall be performed in accordance with ASME PTC 19.1. [4] The purpose of this Subsection is to provide the procedures to be used in propagating the individual test measurement uncertainty terms into a test result uncertainty.

5.4.1 Uncertainty in Test Adjusted Steam Pressure. An estimate of the uncertainty in the test steam pressure, adjusted to the design reference conditions, is calculated as follows:

$$Un_{P_s^o} = \sqrt{B_{P_s^o}^2 + (t_\nu S_{P_s^o})^2} \qquad (5.4.1)$$

where

$$B_{P_s^o}^2 = (\Theta_{w_s^+} B_{w_s^+})^2 + (\Theta_{w^+} B_{w^+})^2 + (\Theta_{P_s^+} B_{P_s^+})^2 + (\Theta_{T_1^+} B_{T_1^+})^2 + (\Theta_{T_2^+} B_{T_2^+})^2 + (\Theta_{T_{1,f}^+} B_{T_{1,f}^+})^2 + (\Theta_{T_{2,f}^+} B_{T_{2,f}^+})^2 + (\Theta_{T_{1,c}^+} B_{T_{1,c}^+})^2 + (\Theta_{T_{2,c}^+} B_{T_{2,c}^+})^2 \qquad (5.4.2)$$

and

Copyright ASME International
Provided by IHS under license with ASME
No reproduction or networking permitted without license from IHS
Not for Resale

TABLE 5.1
STUDENT'S t_v TABLE FOR THE 95% CONFIDENCE LEVEL

Degrees of Freedom	t	Degrees of Freedom	t	Degrees of Freedom	t
1	12.706	11	2.201	21	2.080
2	4.303	12	2.179	22	2.074
3	3.182	13	2.160	23	2.069
4	2.776	14	2.145	24	2.064
5	2.571	15	2.131	25	2.060
6	2.447	16	2.120	26	2.056
7	2.365	17	2.110	27	2.052
8	2.306	18	2.101	28	2.048
9	2.262	19	2.093	29	2.045
10	2.228	20	2.086	30 or more	2.000

GENERAL NOTE:
Table gives values of t such that from $-t$ to $+t$ the area included is 95%.

$$S_{P_s^\circ}^2 = (\Theta_{w_s^+} S_{w_s^+})^2 + (\Theta_{w^+} S_{w^+})^2 + (\Theta_{P_s^+} S_{P_s^+})^2 + (\Theta_{T_1^+} S_{T_1^+})^2 + (\Theta_{T_2^+} S_{T_2^+})^2 + (\Theta_{T_{1,f}^+} S_{T_{1,f}^+})^2 + (\Theta_{T_{2,f}^+} S_{T_{2,f}^+})^2 + (\Theta_{T_{1,c}^+} S_{T_{1,c}^+})^2 + (\Theta_{T_{2,c}^+} S_{T_{2,c}^+})^2 \quad (5.4.3)$$

The methodology and procedures for estimating the bias limits and calculating the precision indices for each of the independent measurement parameters are provided in ASME PTC 19.1 [4] and are therefore not repeated here. Also note that correlated bias analysis is beyond the scope of the current Code.

Student's t factor, t_v, is defined in PTC 19.1 [4] and is a function of the degrees of freedom (i.e., one less than the number of observations taken for a given measured parameter). A table of t factors is given in Table 5.1. If the number of observations is greater than 30, the t factor can be taken as 2.0. The t factor is used to convert standard deviations to 95% confidence intervals.

5.4.2 Sensitivity Factors. The sensitivity factors (Θ), used in the above, can be determined by either of the following techniques.

The central difference method can be employed with separate perturbations of the individual instrument uncertainties. That is, using the data reduction procedures and equations given previously in this Section, compute the average test result from the average test data. Then, using the same equations, systematically compute the change in the final test result caused by a small change in each of the input test parameters. The final result referred to in the preceding sentence is the Code test objective being considered, i.e., the design reference steam pressure, subcooling, dissolved oxygen, or tubeside pressure drop. The ratio of the change in the perturbed parameter to the change in the output is the sensitivity factor for that particular parameter.

Sensitivity factors can also be obtained analytically by partial differentiation of the equations used in computing the results. The equations to be used in the computation of each of the sensitivity factors follow. In deriving these sensitivity factor equations, it is assumed that the error in the calculated fluid and steam properties (heat capacity, density, viscosity, etc.) due to errors in the measurement parameters are small, when compared to the effect of these measurement parameters on the overall test uncertainty. Accordingly, these sensitivity factors neglect fluid property error effects.

Sensitivity Factor for Steam Flow Rate:

$$\Theta_{w_s^+} = F_1 * F_2 * \left(\frac{0.333 * R_s^\circ}{W_s^+}\right) \quad (5.4.4)$$

where

Copyright ASME International
Provided by IHS under license with ASME
No reproduction or networking permitted without license from IHS
Not for Resale

$$F_1 = 0.001690\theta^{0.02736T_s^o} \quad (5.4.5)$$

$$F_2 = \frac{(T_2^o - T_1^o) * NTU^o * U^o * \theta^{-NTU^o}}{(1 - \theta^{NTU^o})^2} \quad (5.4.6)$$

Sensitivity Factor for Circulating-Water Flow Rate:

$$\Theta_{w^+} = \frac{F_1 * F_2 * R_s^o}{R_s^+} * \left[\frac{\frac{-1}{U^+} + 0.835 * R_t^+\left(\frac{d_o}{d_i}\right) + R_f^+}{w^+}\right] \quad (5.4.7)$$

Sensitivity Factor for Inlet-Water Temperature:

$$\Theta_{T_1^+} = \frac{F_1 * F_2 * R_s^o}{R_{sSUP+}} * \left[\frac{1}{U^+ * \ln\left(\frac{T_s^+ - T_1^+}{T_s^+ - T_2^+}\right) * (T_s^+ - T_1^+)} - \frac{R_f^+}{T_2^+ - T_1^+}\right] \quad (5.4.8)$$

Sensitivity Factor for Outlet-Water Temperature:

$$\Theta_{T_2^+} = \frac{F_1 * F_2 * R_s^o}{R_s^+} * \left[\frac{-1}{U^+ * \ln\left(\frac{T_s^+ - T_1^+}{T_s^+ - T_2^+}\right) * (T_s^+ - T_2^+)} + \frac{R_f^+}{T_2^+ - T_2^+ - T_1^+}\right] \quad (5.4.9)$$

Sensitivity Factor for Steam Pressure:

$$\Theta_{P_s^+} = \frac{F_1 * F_2 * R_s^o}{F_3 * R_s^+} * \left[\frac{T_2^+ - T_1^+}{U^+ * \ln\left(\frac{T_s^+ - T_1^+}{T_s^+ - T_2^+}\right) * (T_S^+ - T_2^+) * (T_s^+ - T_2^+)}\right) - \frac{F_1 * F_2 * R_s^o * A_o}{F_3 * R_s^+ + w^+ * c_p^+ * (T_2^+ - T_1^+)} * \frac{\sum_{i=1}^{j} LMTD_{f,i}^2 - \sum_{i=1}^{j} LMTD_{c,i}^2}{\sum_{i=1}^{j} (T_s^+ - T_{1,f,i}^+) * \sum_{i=1}^{j} (T_{2,f,i}^+)} \quad (5.4.10)$$

where

$$F_3 = \frac{1}{0.001690\theta^{0.02736T_s^+}} \quad (5.4.11)$$

Sensitivity Factor for Cleanliness Factor Fouled Tube Inlet Temperature:

$$\Theta_{T_{1,f}^+} = \frac{F_1 * F_2 * R_s^o * A_o}{F_3 * R_s^+ * w^+ * c_p^+ * (T_2^+ - T_1^+)} * \frac{1}{j} * \sum_{i=1}^{j}\left[\frac{\ln\left(\frac{T_s^+ - T_{1,f,i}^+}{T_s^+ - T_{2,f,i}^+}\right) + \frac{T_{2,f,i}^+ - T_{1,f,i}^+}{T_s^+ - T_{1,f,i}^+}}{\ln\left(\frac{T_s^+ - T_{1,c,i}^+}{T_s^+ - T_{2,f,i}^+}\right)^2}\right] \quad (5.4.12)$$

Sensitivity Factor for Cleanliness Factor Fouled Tube Outlet Temperature:

$$\Theta_{T_{2,f}^+} = \frac{F_1 * F_2 * R_s^o * A_o}{F_3 * R_s^+ * w^+ * c_p^+ * (T_2^+ - T_1^+)} * \frac{1}{j} * \sum_{i=1}^{j}\left[\frac{\ln\left(\frac{T_s^+ - T_{1,f,i}^+}{T_s^+ - T_{2,f,i}^+}\right) + \frac{T_{2,f,i}^+ - T_{1,f,i}^+}{T_s^+ - T_{2,f,i}^+}}{\ln\left(\frac{T_s^+ - T_{1,c,i}^+}{T_s^+ - T_{2,f,i}^+}\right)^2}\right] \quad (5.4.13)$$

Sensitivity Factor for Cleanliness Factor Clean Tube Inlet Temperature:

$$\Theta_{T_{1,c}^+} = \frac{F_1 * F_2 * R_s^o * A_o}{F_3 * R_s^+ * w^+ * c_p^+ * (T_2^+ - T_1^+)} * \frac{1}{j} * \sum_{i=1}^{j}\left[\frac{\ln\left(\frac{T_s^+ - T_{1,c,i}^+}{T_s^+ - T_{2,c,i}^+}\right) + \frac{T_{2,c,i}^+ - T_{1,c,i}^+}{T_s^+ - T_{1,c,i}^+}}{\ln\left(\frac{T_s^+ - T_{1,c,i}^+}{T_s^+ - T_{2,c,i}^+}\right)^2}\right] \quad (5.4.14)$$

Sensitivity Factor for Cleanliness Factor Clean Tube Outlet Temperature:

Copyright ASME International
Provided by IHS under license with ASME
No reproduction or networking permitted without license from IHS Not for Resale

$$\Theta_{T^+_{2,c}} = \frac{F_1 * F_2 * R^o_s * A_o}{F_3 * R^+_s * w^+ * c^+_p * (T^+_2 - T^+_1)} * \frac{1}{j} \qquad (5.4.15)$$

$$* \sum_{i=1}^{j} \left[\frac{\ln\left(\frac{T^+_s - T^+_{1,c,i}}{T^+_s - T^+_{2,c,i}}\right) + \frac{T^+_{2,c,i} - T_{1,c,i}}{T^+_s - T^+_{2,c,i}}}{\ln\left(\frac{T^+_s - T_{1,c,i}}{T^+_s - T^+_{2,c,i}}\right)^2} \right]$$

5.4.3 Uncertainty in Tubeside Pressure Drop. An estimate of the uncertainty in the test tubeside pressure drop, adjusted to the design reference conditions, is calculated as follows:

$$Un_{\Delta P^o_w} = \sqrt{B^2_{\Delta P^o_w} + (t_\nu S_{\Delta P^o_w})^2} \qquad (5.4.16)$$

where

$$B^2_{\Delta P^o_w} = (\Theta_{\Delta P^+_w} B_{\Delta P^+_w})^2 + (\Theta_{w^+} B_{w^+})^2 \qquad (5.4.17)$$

and

$$S^2_{\Delta P^o_w} = (\Theta_{\Delta P^+_w} S_{\Delta P^+_w})^2 + (\Theta_{w^+} S_{w^+})^2 \qquad (5.4.18)$$

The sensitivity factors are as follows:

$$\Theta_{\Delta P^+_w} = \frac{\Delta P^o_w}{\Delta P^+_w} \qquad (5.4.19)$$

$$\Theta^+_w = \frac{1.8 * \Delta P^o_w}{w^o} \qquad (5.4.20)$$

5.4.4 Uncertainty in Condensate Subcooling. This estimate follows:

$$Un_{\Delta T_s} = \sqrt{B^2_{\Delta T^+_s} + (t_\nu S)^2_{\Delta T^+_s}} \qquad (5.4.21)$$

where b, t_ν and S have the definitions of Subsection 2.2, and

$$S^2_{\Delta T^+_s} = (\Theta_{T^+_s} S_{T^+_s})^2 + (\Theta_{T^+_c} S_{T^+_c})^2 \qquad (5.4.22)$$

with the sensitivity factors

$$\Theta_{T_s} \text{ and } \Theta_{T_c} = 1.0$$

where T_c = temperature of condensate

5.4.5 Uncertainty in Dissolved Oxygen in Condensate. This estimate follows:

$$Un^2_{DO^+_2} = \sqrt{B^2_{DO^+_2} + (t_\nu S_{DO^+_2})^2} \qquad (5.4.23)$$

where B, t_ν, and S have the definitions of Subsection 2.4 and are determined directly from the dissolved oxygen instrument and number of readings.

Copyright ASME International
Provided by IHS under license with ASME
No reproduction or networking permitted without license from IHS Not for Resale

SECTION 6 — REPORT OF RESULTS

6.1 COMPOSITION OF REPORT

The general organization of the report of test is given in this Section. Specific data requirements are summarized in Subsection 6.2.

6.1.1 Objective of the Test. This Section shall explain why the test was conducted, and what was to be accomplished by the test.

6.1.2 Conclusions. This Section shall be a statement of the conclusions derived from the test, including whether or not the equipment met expected performance, and an assessment of the overall quality of the test as determined from the uncertainty analysis.

6.1.3 Identification of the Equipment Tested. This Section shall clearly identify the particular piece of condensing equipment which was tested. The following information should be included.

(a) Plant where the equipment is installed
(b) Owner of the condenser
(c) Unit served by the condenser
(d) Manufacturer of the condenser
(e) Serial number

6.1.4 Description of Equipment Tested. This Section shall describe the equipment in sufficient detail to allow the reader of the test report to duplicate all analyses and to form independent judgment of the test results. The following information should be included.

(a) Type of condenser
(b) Number of passes
(c) Dimensioned drawings of condenser
(d) Special features
(e) Effective surface area
(f) Distance from exhaust flange or prime mover to inlet flange of condenser
(g) Area of steam inlet to condenser
(h) Elapsed time since condenser was placed in service
(i) Elapsed time since last cleaning
(j) Method used for cleaning
(k) Number of tubes in each pass
(l) Active length of tubes
(m) Outside diameter of tubes
(n) Inside diameter or wall thickness of tubes
(o) Tube material(s)
(p) Number of tubes plugged during tests
(q) Diagram of the tubesheet layout
(r) System configuration (once-through or closed)
(s) Source of cooling water
(t) Description of circulating water pumps
(u) Description of condensate pumps
(v) Overall description of cooling system

6.1.5 Description of Testing Setup. This Section shall describe the overall test setup in sufficient detail to allow for interpretation of the test data. Sketches, photographs, and drawings should be included where appropriate.

(a) Condenser pressure measurement locations
(b) Condenser pressure primary devices
(c) Inlet temperature measurement points
(d) Discharge temperature measurement points
(e) Circulating water-flow measurement methods, details, and equipment
(f) Description of non-condensible flow measurement
(g) Method of hotwell level measurement
(h) Method of waterbox level measurement
(i) Locations of waterbox differential pressure taps
(j) Location and method of condensate dissolved oxygen measurement
(k) Locations of tubes for fouling measurements

6.1.6 Discussion. This Section should include a discussion of background information relevant to the tests, including the following:

(a) History of operation of the equipment, including any unusual operation incidents, repairs, or modifications to it.
(b) Agreements made prior to or after the testing which affect the execution of the test or the analysis of the results.
(c) A detailed description of all pretest inspections and the conclusions reached from those inspections.

6.1.7 Test Data at Operating Conditions. This Section shall include a listing of the reduced data (instrument readings with calibrations and corrections applied, averaged over the test period and

Copyright ASME International
Provided by IHS under license with ASME
No reproduction or networking permitted without license from IHS
Not for Resale

expressed in engineering units). It shall also include a summary of calculated results at the operating conditions.

6.1.8 Test Data Adjusted to Design Conditions. This Section shall list test results as specified in this Code to guarantee conditions. Where appropriate, it should also include a table containing the test results along with the manufacturer's performance curves.

6.1.9 Uncertainty Analysis. The report shall include the uncertainty analysis for each run.

6.1.10 Appendices. The following appendices shall be included in the test report.

(a) Sample calculation. The sample calculation shall be included using the data from one run. The calculation shall be presented in sufficient detail that the reader can repeat the calculations for the other test runs.

(b) List of Instrumentation. This list shall include all instruments used in the tests, and shall include:

(1) manufacturer
(2) model number
(3) serial number
(4) operating settings
(5) claimed accuracy
(6) calibration coefficients

(c) List of personnel. All personnel who substantively participated in the planning, execution, analysis, or reporting of the test shall be listed along with their organizational affiliations and function in the testing.

(d) Uncertainty analysis sample computation. This sample calculation should be included for one run, and shall be presented in sufficient detail that the reader can repeat the calculations for the other test runs.

6.1.11 Distribution of Data. The following information shall be made available to all parties to the test as soon as possible after the completion of the test:

(a) Daily log of test events.
(b) Copies of all manually acquired data.
(c) Hard copies of all reduced data.
(d) Daily log of test events.
(e) Computer records;

(1) Data acquired by computer shall be made available in a format agreed to by all parties.

(2) If the data are compressed for convenience in distribution, a copy of the decompression software shall be included with the data.

6.2 REPORT OF DATA

The reduced test data for each run shall be listed in the report. The list given below is a guide to the information that should be included. All information relevant to the test, required for analysis of the data, or pertinent to the interpretation of the test results shall be included.

6.2.1 General Information

(a) Run number
(b) Date
(c) Time

6.2.2 Condenser Pressure. Pressures recorded at each point for each tube bundle.

6.2.3 Circulating Water Salinity and Chemistry

6.2.4 Inlet Temperature. Temperatures recorded at each inlet-water measuring point.

6.2.5 Outlet Temperature. Temperature measurements made at each point in each circulating-water conduit.

6.2.6 Condensate Temperature. Temperature measurements made at each point in each active condensate outlet conduit.

6.2.7 Cooling-Water Flow

(a) Velocity traverse

Velocities measured at each point in the velocity traverse.

(b) Acoustic

Individual path velocities
Average flow velocity

(c) Dye dilution

Temperature of sample water
Background fluorescence
Fluorescence of standard
Fluorescence of circulating water

(d) Differential producer

Differential pressure across meter

(e) Energy balance

All data required by PTC 6 [4] to evaluate the energy delivered to the condenser

6.2.8 Waterbox Pressure Drop

6.2.9 Hotwell Level Reading

6.2.10 Waterbox Level Reading

6.2.11 Non-condensible Flow Rate

(a) Orifice plate pressure drop
(b) Fluid temperature
(c) Fluid static pressure

Copyright ASME International
Provided by IHS under license with ASME
No reproduction or networking permitted without license from IHS Not for Resale

6.2.12 Fouling Assessment

(a) Tube locations
(b) Tube inlet temperature
(c) Tube outlet temperature

6.2.13 Dissolved Oxygen Content in Condensate

6.2.14 Subcooling

6.2.15 Tubeside Pressure Drop

6.2.16 Numerical Conclusions. This Section shall include a comparison of measured performance to requirements. The analysis of uncertainty of individual measurements and overall test uncertainty.

Copyright ASME International
Provided by IHS under license with ASME
No reproduction or networking permitted without license from IHS Not for Resale

STD.ASME PTC 12.2-ENGL 1998 ■ 0759670 0605049 830 ■

FOREWORD TO NONMANDATORY APPENDICES

To provide more guidance for the Code user, the Committee has prepared Appendices A through K. These Appendices are nonmandatory and are provided for information. They complement and amplify the instruction of the main body of PTC 12.2. Their review is important for a full appreciation of the test methods in current practice.

These Appendices are divided into three categories. The first category provides guidelines for proper use of the Code and to help the test engineer conduct the test. The second category adds detail to sections of the Code which require supporting documentation. The final category includes diagnostic tests to assess common classes of surface condenser problems.

NONMANDATORY APPENDICES

A Guideline: Flowcharts/Checklists
B Guideline: Automatic Data Acquisition
C Guideline: Performance Monitoring
D Guideline: Example Calculations
E Detail: Uncertainty Analysis for Condensing Pressure
F Detail: Geothermal Surface Condensers
G Diagnostic: Air Binding
H Diagnostic: Non-Condensible Removal Equipment
I Diagnostic: Tube Fouling
J Physical Properties of Sea Water
K References

Copyright ASME International
Provided by IHS under license with ASME
No reproduction or networking permitted without license from IHS
Not for Resale

NONMANDATORY APPENDIX A — GUIDELINE: FLOWCHARTS/CHECKLISTS

(This Appendix is not a part of PTC 12.2 and is included for information purposes only.)

In an effort to guide users of the Code in the instrumentation selection and preparation process, the following flowcharts and checklists have been created. These will help the user properly plan all necessary stages of the test. They should be generalized to fit the individual needs. These aids should not be substituted for a site-specific test plan, instrumentation list, required calibration methods, or any other mutually agreed-upon testing procedure.

Under no circumstances should these aids limit or confine the user. If a more comprehensive testing plan is necessary, it is up to the testing parties to produce a document that is mutually inclusive in all the areas of importance. This Appendix can serve as a starting point for such an undertaking.

Copyright ASME International
Provided by IHS under license with ASME
No reproduction or networking permitted without license from IHS
Not for Resale

Parameter tested	Instrument Used	Expected accuracy	Calibration range	Location	Value

FIG. A.1 PTC 12.2 TEST PLAN INSTRUMENTATION LIST

Copyright ASME International
Provided by IHS under license with ASME
No reproduction or networking permitted without license from IHS
Not for Resale

TEST PLAN CHECKLIST (PTC 12.2)

_____ Determine the overall scope of the test. Evaluate the specific parameters that need to be tested.

_____ Select the most cost-effective instruments and/or methods to measure all of the necessary parameters.

_____ Perform a pretest uncertainty analysis regarding the parameters to be measured.

_____ Install instruments in a sensible order. Begin with the pressure instruments. These must all be calibrated at their respective locations to compensate for environmental changes.

_____ All temperature instruments must be calibrated prior to installation, including any extension cable associated with energized or voltage-producing sensors.

_____ Install all temperature instruments in a logical order. Run extension wire or cable back to data-logging device (where appropriate).

_____ Check logging device for operation, including a continuity check on all the test parameters.

_____ Inspect installation and assure that no open circuits and/or faulty ground loops exist.

_____ When all channels are properly working (data logger use only) begin pressure calibration.

_____ At this point check all local instruments for proper operation; calibrate where appropriate (thermocouples, gages, transducers, etc.).

_____ Make certain that all calibrations are clearly recorded and traceable to an accepted standard.

_____ After calibrating, check for measurement feasibility by logging all pressures, flows, and temperatures at the operational conditions.

_____ Correct any problems with instruments, loggers, and associated hardware.

_____ Conduct a preliminary test as close to the agreed-upon operational requirements as possible. (1 hr max) Check all average values for feasibility.

_____ If all equipment functions correctly prepare for the performance test. Coordinate all efforts through the operating department and the designated parties.

_____ Make certain that any cycle isolation that needs doing is taken care of prior to starting.

_____ If a separate cooling-water flow test is to be conducted simultaneously, coordinate with all testing parties.

_____ Consider any special cycle isolation necessary to conduct concurrent tests.

_____ Prepare a test schedule with all testing/operating parties. Include start/stop times, unit load or steam flow, operating requirements, and any other pertinent information regarding the operation of the condenser. Incorporate these into a logical and achievable test schedule.

_____ Follow the test schedule and begin testing.

_____ Make any schedule changes necessary to meet the scope and objectives of the test. Keep a test log to document any deviations from the test plan or the original testing schedule.

Copyright ASME International
Provided by IHS under license with ASME
No reproduction or networking permitted without license from IHS
Not for Resale

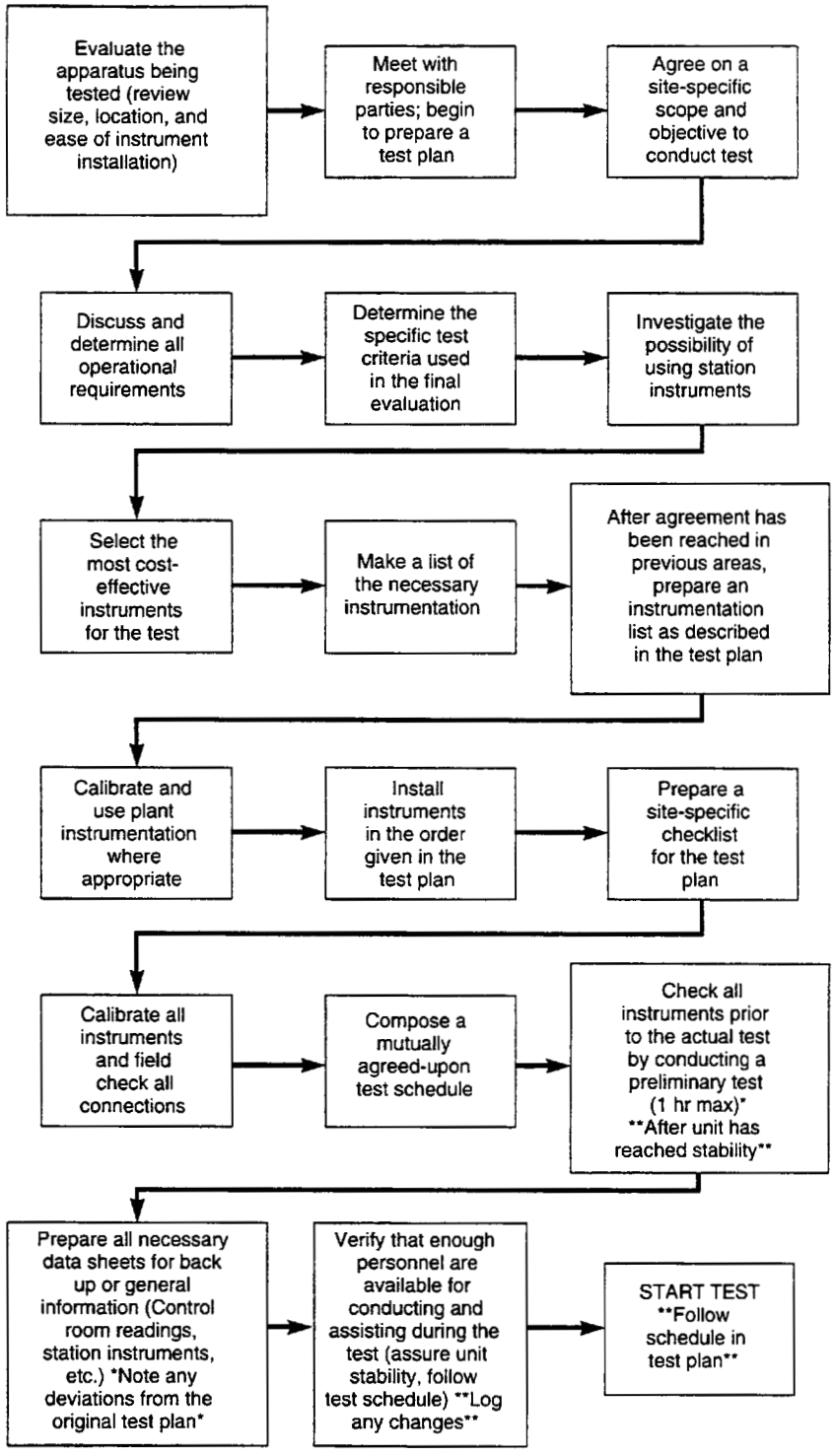

FIG. A.2 TEST PLAN FLOWCHART

Copyright ASME International
Provided by IHS under license with ASME
No reproduction or networking permitted without license from IHS
Not for Resale

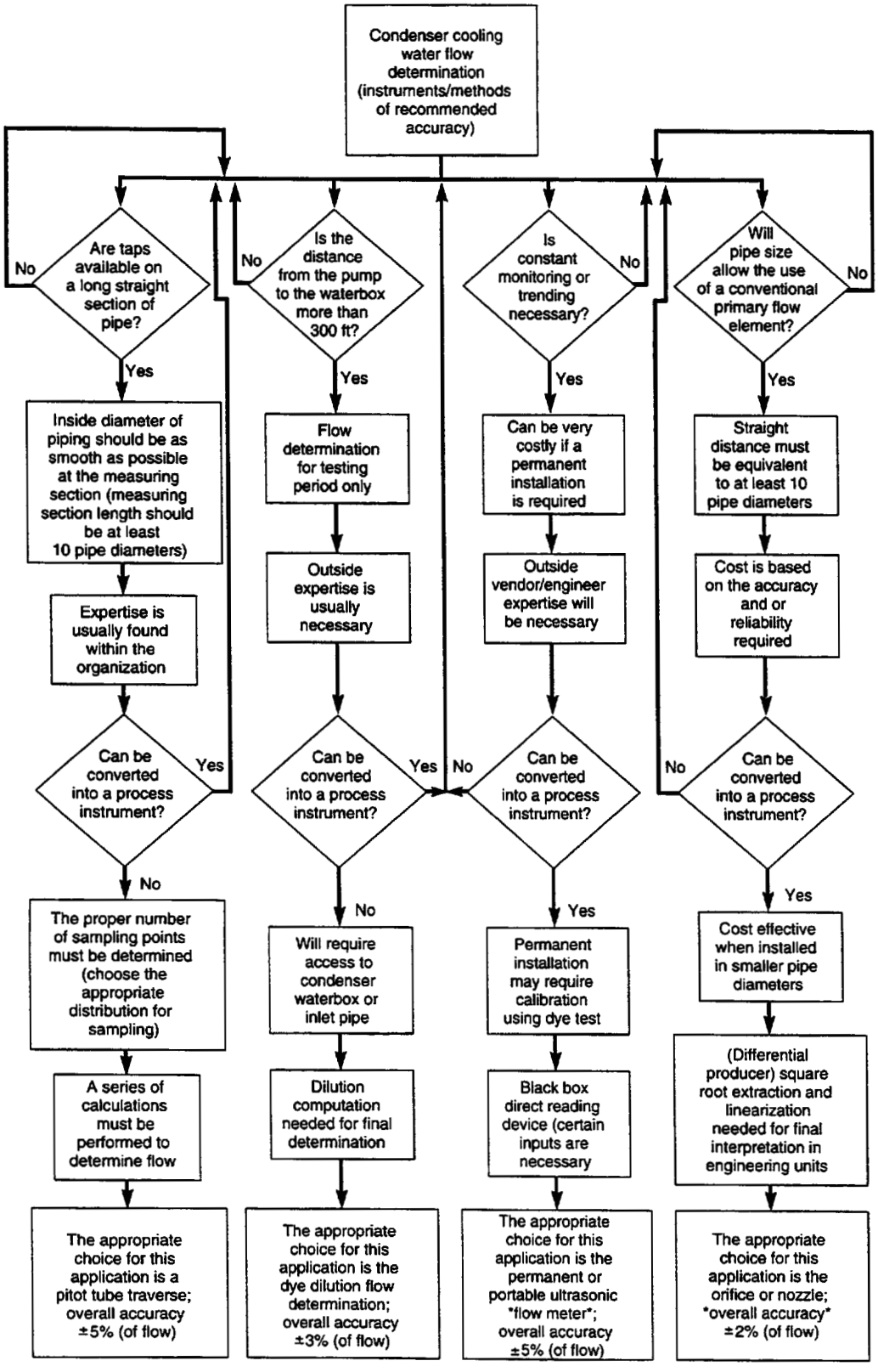

FIG. A.3 CONDENSER INSTRUMENTATION SELECTION

Copyright ASME International
Provided by IHS under license with ASME
No reproduction or networking permitted without license from IHS
Not for Resale

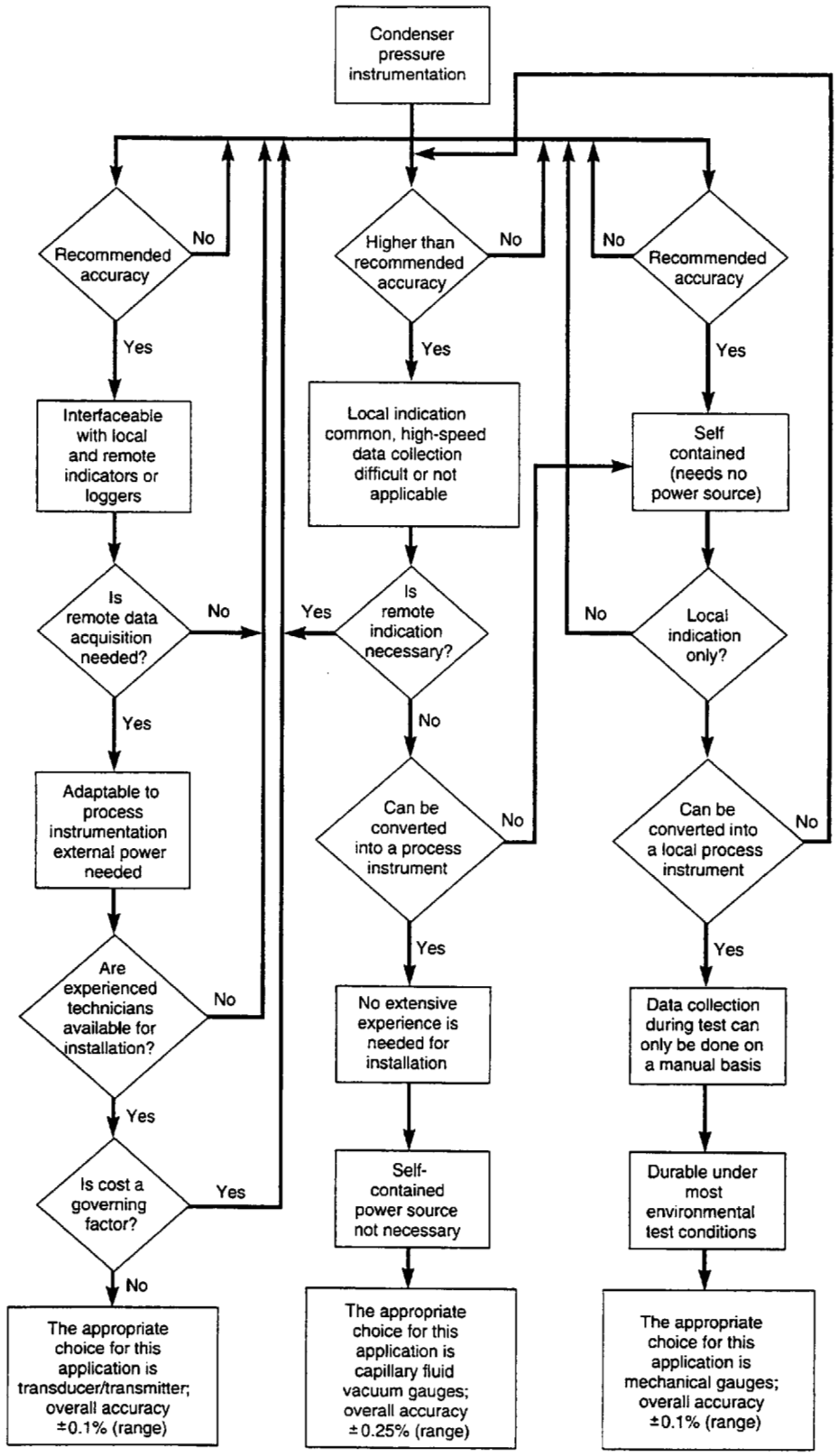

FIG. A.4 CONDENSER INSTRUMENTATION SELECTION

Copyright ASME International
Provided by IHS under license with ASME
No reproduction or networking permitted without license from IHS
Not for Resale

NONMANDATORY APPENDIX B — GUIDELINE: AUTOMATIC DATA ACQUISITION

(This Appendix is not a part of PTC 12.2 and is included for information purposes only.)

This Appendix is a guide for the implementation of an automatic Data Acquisition System (DAS). The DAS can enhance data collection and analysis. The DAS can accomplish the following:

(a) Simultaneous reading and recording of all data points.

(b) Provide data collection frequency exceeding that described in Section 3.

(c) Provide data collection time measurements/ synchronization as described in Section 3.

(d) Provide data accuracy exceeding that described in Subsection 4.3.

A portable, computer-based DAS together with state-of-art sensor technology and analog-to-digital converter reliability can accomplish the above objectives. This DAS could also fulfill the following:

(a) Portability and ease of configuration.

(b) Flexible network which can analyze sensor and acquisition faults.

(c) Flags and alarms for out-of-range values.

(d) Graphics for data trending and results presentation.

(e) Mass data storage and ease of data retrieval.

(f) Ease of calculation development and export data for third-party thermodynamic model analysis.

The DAS can provide certain enhancements that manual data collection cannot offer, such as:

(a) Real time data at very high sampling frequency.

(b) Reduction in manual data collection personnel.

(c) Reduction in data recording errors.

(d) Quick test condition/results validation which leads to prevention of retest and associated costs.

ASME PTC 19.22 [4] deals with this subject in detail.

Copyright ASME International
Provided by IHS under license with ASME
No reproduction or networking permitted without license from IHS
Not for Resale

NONMANDATORY APPENDIX C — GUIDELINE: PERFORMANCE MONITORING

(This Appendix is not a part of PTC 12.2, and is included for information purposes only.)

C.1 INTRODUCTION

While the main body of the Code is written for the purpose of acceptance testing, this Appendix addresses techniques that permit trending and condenser performance evaluations during operation. Satisfactory performance monitoring can be achieved without the stringent instrument accuracy required for acceptance testing. That lack of necessity of an absolute numerical level of test results is what distinguishes the monitoring test plan focus, set-up, and data from acceptance testing. Relative measurements and repeatability are critical. If the data prove to be repeatable during the same operating conditions, correction factors to absolute performance levels can always be developed from an analysis of those data sets.

The following discussion describes the considerations of condenser performance monitoring tests.

C.2 PERFORMANCE MONITORING TEST STRUCTURE

Performance monitoring can range from periodic to real-time on-line testing. Implementation of a performance monitoring program will vary significantly between plants and will be based on local needs, economics, and resources including the condenser performance, instrumentation methods, and methods of data collection and interpretation.

A decision which significantly characterizes a condenser program is whether to monitor periodically, continuously, or both. The major benefits of continuous condenser performance monitoring are the knowledge of when changes occur and what the related circumstances were in order to develop the earliest operational or maintenance response; the ability to anticipate if there will be more severe changes from the initial indications; and the continuous assessment of how the condenser influences power generation and costs. Nonetheless, a compromise may be considered which balances the one-time high capital costs and maintenance cost of the continuous system's permanent instrumentation against the repetitive set-up costs and data collection of the periodic test. It should also be recognized that more complex and reliable levels of performance monitoring will require increased quantities of instrumentation.

C.4 PARAMETERS TO MONITOR

The following parameters are recommended for monitoring in a general order of importance, though the actual list is always dictated by the overall program's objectives.

(a) Condenser terminal temperature difference
(b) Condenser back-pressure deviation from design
(c) Circulating-water flow or relative flow
(d) Temperature rise of circulating water
(e) Tube-bundle hydraulic pressure drop relative to discharge waterbox–to–piping pressure loss
(f) Condenser tube bundle fouling
(g) Air in-leakage
(h) Condensate subcooling

C.5 MONITORING MEASUREMENTS

The main body of Code describes requirements for acceptance test measurements. These can be slightly relaxed and adapted for performance monitoring as long as the sensor in question is still sufficiently precise to reliably reflect the same relative test value as conditions change. The following discussion and table apply.

Copyright ASME International
Provided by IHS under license with ASME
No reproduction or networking permitted without license from IHS
Not for Resale

Measurement	Code Requirement	Performance Monitoring Methods
Cooling-Water Flow	Dye Dilution, Traverse, etc.	Pump Curves/TDH correlations, heat balance, calibrated flow instrument, outlet waterbox DP
Cooling-Water Outlet Temp.	Traverse, full rake	Thermowells, partial rake, thermowells correlated to one time temperature traverse
Tube Cleanliness	Adjacent Tube Measurements	Differential waterbox and waterbox outlet pressures, expected backpressure, outlet temperature profile, terminal temperature difference
Pressure	NIST Calibrated Electronic Transducer at Prescribed Locations	Existing locations near bundle; calibration of sensors required
Temperature	NIST calibrated devices at prescribed locations	Existing locations; calibration check required
Air In-leakage	Flow Meter	Same as code or continuous meter type

Several notes are relevant to the above. Most installed plant flow devices are not sufficiently accurate to serve as a primary flow measurement device. This includes circulating-water flow devices, feedwater flow devices, and plant stream venturis. A calibration of plant devices during an accurate test is necessary to monitor the flow properly. For example, correlate pump TDH outlet waterbox pressure drop, or a Pitot-static type center reading during a previous dye-dilution test. With regard to pressure and temperature instruments, refer to the Sections in this Code which address the choices for instrumentation. Some new instrumentation is likely required for a successful program. In addition, an automated quick purge of the pressure measurement lines before reading and some added temperature hardware at the outlet to reflect the temperature profile more adequately than a few shallow existing thermowells will significantly enhance the monitoring results.

C.3 CALCULATIONS

Refer to Section 5 for the details of the computation of parameters for trending. All variables are recommended to be plotted with respect to time, inlet-water temperature, and generation. Normalize data with respect to design heat transfer coefficient, fouling, circulating-water flow, or air in-leakage. Plot the ratio of the bundle vs. the outlet box pressure drop to aid in diagnosis of fouling increases. Benchmark significant conditions such as tube cleaning.

Data validity can be ensured by examining the statistical data variation and the degree of the compliance with respect to inlet temperature, station generation, or circulating-water flow. The data should be precise, consistent, and dependable. Suitable approximations can be made depending on the experience of the personnel and program goals.

Copyright ASME International
Provided by IHS under license with ASME
No reproduction or networking permitted without license from IHS
Not for Resale

NONMANDATORY APPENDIX D — GUIDELINE: EXAMPLE CALCULATIONS

(This Appendix is not a part of PTC 12.2, and is included for information purposes only.)

This example is presented to illustrate a thermal performance test of a steam surface condenser. The example is based on a test of a single-pass condenser which provides heat rejection and condensation of the turbine exhaust steam from an electric power– generating unit. Table D.1 provides the design reference data for the condenser. Table D.2 summarizes the data collected during the test. Table D.3 summarizes the water and steam properties for the design and test conditions, which were determined using the *ASME Steam Tables*. [2] Table D.4 summarizes the data and calculations for the cleanliness factor determination, conducted in parallel with the test.

The example calculations follow the calculation procedures of Section 5.

D.1 BASIC HEAT TRANSFER RELATIONS

D.1.1 Condenser Heat Load. The condenser heat load at the test conditions is computed as follows:

$$Q^{+} = w^{+} * c_p^{+} * (T_2^{+} - T_1^{+})$$

$$= 1.4687E + 0.8 * 0.998 * (90.7 - 74.9)$$

$$= 2.3161E + 09 \text{ Btu/hr} \qquad \text{(D.1.1)}$$

where

$$w^{+} = 294{,}410 \text{ (gpm)} * 62.19 \text{ (lb/ft}^3\text{)} * 8.0208 \text{ (min} \cdot \text{ft}^3\text{/hr} \cdot \text{gal)}$$

$$= 1.4687E + 08 \text{ lb/hr}$$

D.1.2 Overall Heat Transfer Coefficient. The overall heat transfer coefficient at the test conditions is computed as follows:

$$U^{+} = \frac{Q^{+}}{A_o * LMTD^{+}}$$

$$= \frac{2.3161E + 09}{239{,}476 * 17.14} = 564.13 \text{ Btu/hr-ft}^2\text{-°F} \qquad \text{(D.1.2)}$$

Copyright ASME International
Provided by IHS under license with ASME
No reproduction or networking permitted without license from IHS
Not for Resale

TABLE D.1
CONDENSER DESIGN DATA

Condenser Description	
Type	Single Pressure
No. passes	1
No. tubes	26550
Tube material	90/10 CU/NI
k (Btu/hr · ft² · °F)	26
Tube OD (in.)	0.875
Tube gage (BWG)	18
Tube wall (in.)	0.049
Effective length (ft)	39.375
Outside tube surface area (sq ft)	239476
CW flow area (sq ft)	87.42
Design Conditions	
Inlet CS temp (°F)	65
Outlet CW temp (°F)	80.6
CW flow (gpm)	280000
CW flow (lb/hr)	1.3989E + 08
Cleanliness factor (%)	85
Condenser pressure (in. · HgA)	1.50
Condenser pressure (psia)	0.74
Heat load (Btu/hr)	2.1760E + 09
Tubeside pressure drop (ft water)	14.5
Condensing flow (lb/hr)	2222185

where

$$LMTD^{+} = \frac{(T_2^{+} - T_1^{+})}{\ln\left(\frac{T_S^{+} - T_1^{+}}{T_S^{+} - T_2^{+}}\right)} = \frac{(90.7 - 74.9)}{\ln\left(\frac{101.14 - 74.9}{101.14 - 90.7}\right)} = 17.1°\text{F} \qquad \text{(D.1.3)}$$

and

$$T_S^{+} = f\{P_S^{+}\} = 101.14°\text{F}$$

from *ASME Steam Tables.* [2]

D.1.3 Tubewall Resistance

$$R_m^{+} = \frac{d_o}{24 * k_m^{+}} * \ln\left(\frac{d_o}{d_i}\right) = \frac{0.875}{24 * 26.00} * \ln\left(\frac{0.875}{0.777}\right) \qquad \text{(D.1.4)}$$

$$= 0.00016656 \text{ hr-ft}^2\text{-°F/Btu}$$

D.1.4 Tubeside Resistance. The tubeside heat transfer coefficient calculation is taken from Rabas and Cane. [1]

Copyright ASME International
Provided by IHS under license with ASME
No reproduction or networking permitted without license from IHS
Not for Resale

TABLE D.2
TEST DATA

Test Measurement	Measurement Point	Average Value	Number Readings	Standard Deviation
Inlet CW temp (°F)	1	75.0	60	0.150
	2	74.9	60	0.143
	Average	74.9		
Outlet CW temp (°F)	1	94.5	60	0.475
	2	92.3	60	0.532
	3	89.7	60	0.376
	4	87.3	60	0.592
	5	93.2	60	0.670
	6	92.1	60	0.332
	7	89.5	60	0.456
	8	87.0	60	0.327
	Average	90.7		
CW flow (gpm)		294410	12	2115*
Condenser pressure (psia)	1	0.992	60	0.0511
	2	0.987	60	0.0430
	3	0.987	60	0.0371
	4	0.982	60	0.0409
	5	0.958	60	0.0542
	6	0.958	60	0.0485
	7	0.972	60	0.0381
	8	0.982	60	0.0419
	9	0.987	60	0.0266
	10	0.977	60	0.0213
	11	0.992	60	0.0329
	12	0.982	60	0.0409
	Average	0.982		
Condensing flow (lb/hr)		2408314	5	18953
Tubeside pressure drop (ft. water)		15.7	12	0.35

* The average water flow rate was based on one Pitot tube traverse. The standard deviation was based on twelve Pitot tube readings of the pipe centerpoint.

$$R_t^+ = 0.0451 \left(\frac{\mu^{+\,0.373}}{k^{+\,0.538} * \rho^{+\,0.835} * c_p^{+\,0.462}} \right) * \frac{d_i^{0.165}}{V^{+\,0.835}}$$

$$= 0.0451 \left(\frac{2.005^{0.373}}{0.3539^{0.538} * 62.19^{0.835} * 0.998^{0.462}} \right) * \frac{0.777^{0.165}}{7.50^{0.835}}$$

$$= 0.00057987 \text{ hr-ft}^2\text{-°F/Btu} \qquad \text{(D.1.5)}$$

where

$$v^+ = \frac{w^+}{3600 * \rho^+ * A_i}$$

$$= \frac{1.4687E+08}{3600 * 62.19 * 87.42} = 7.50 \text{ ft/sec} \qquad \text{(D.1.6)}$$

Copyright ASME International
Provided by IHS under license with ASME
No reproduction or networking permitted without license from IHS
Not for Resale

TABLE D.3
STEAM AND WATER PROPERTIES

	Design	Test
CONDENSER STEAM PROPERTIES		
Condenser Pressure (in. Hga)	1.5	22.0
Condenser Sat. Temp. (°F)	91.72	101.14
Density (lb/ft³)*	0.0022	0.0029
CIRCULATING WATER FLUID PROPERTIES		
Bulk Avg. CW Temp. (°F)	72.8	82.8
Specific Heat (Btu/lb-°F)	0.9986	0.9981
Thermal Cond (Btu/hr-ft-°F)	0.03489	0.3539
Viscosity (lb/ft-hr)	2.275	2.005
Density (lb/ft³)	62.28	62.19

* Steam density is based on saturation conditions. This is generally of sufficient accuracy for use in the adjusted steam side resistance calculation. If greater accuracy is required, the moisture content of the steam can be determined from the steam enthalpy, where the steam enthalpy is determined from the calculated heat duty and the measured condensing steam flow rate.

TABLE D.4
FOULING RESISTANCE DETERMINATION TEST

Tube Set	T_1 °F	T_2 °F	T_f °F	T_c °F	R_f hr · ft² · °F/Btu
1	74.9	101.14	91.9	93.1	0.000183
2	74.9	101.14	92.3	93.7	0.000205
3	74.9	101.14	92.3	93.8	0.000218
4	74.9	101.14	91.9	93.4	0.000226
5	74.9	101.14	91.6	93.2	0.000247
6	74.9	101.14	91.4	93.1	0.000266
7	74.9	101.14	92.6	93.9	0.000186
8	74.9	101.14	92.8	94.0	0.000169
9	74.9	101.14	92.3	93.9	0.000232
10	74.9	101.14	92.0	93.8	0.000266
11	74.9	101.14	91.5	93.2	0.000264
12	74.9	101.14	91.4	93.0	0.000252
13	74.9	101.14	91.5	93.2	0.000264
14	74.9	101.14	91.3	93.1	0.000283
				Avg.	0.000233

Copyright ASME International
Provided by IHS under license with ASME
No reproduction or networking permitted without license from IHS
Not for Resale

D.1.5 Fouling Resistance. The fouling resistance calculations, performed in accordance with para. 5.1.5, are provided in Table D.4. The resulting fouling resistance was:

$$R_f^{\dagger} = \frac{1}{14}\sum_{i=1}^{14} R_{f,i}^{\dagger} = 0.000233 \text{ hr-ft}^2\text{-°F/Btu} \qquad \text{(D.1.7)}$$

D.1.6 Shellside Resistance. The shellside resistance at the test conditions is determined by difference as follows:

$$R_S^{\dagger} = \frac{1}{U^{+}} - R_m^{+} - R_t^{\dagger}\left(\frac{d_o}{d_i}\right) - R_f^{\dagger}$$

$$= \frac{1}{564.13} - 0.00016656 - 0.00057987\left(\frac{0.875}{0.777}\right) - 0.0002330$$

$$= 0.00072 \text{ hr-ft}^2\text{-°F/Btu} \qquad \text{(D.1.8)}$$

D.2 CONDENSER PRESSURE DEVIATION RESULTS CALCULATIONS

D.2.1 Tubewall Resistance. The tubewall resistance is a constant which is dependent only on the tube wall thickness and material. Accordingly,

$$R_m^{o} = R_m^{+} = 0.00016656 \text{ hr-ft}^2\text{-°F/Btu} \qquad \text{(D.2.1)}$$

D.2.2 Tubeside Resistance. The tubeside heat transfer coefficient is calculated at the design conditions as follows:

$$R_t^{*} = 0.0451\left(\frac{\mu^{*\,0.373}}{k^{*0.538} * \rho^{*\,0.835} * c_p^{+\,0.462}}\right) * \frac{d_i^{0.165}}{v^{*0.835}}$$

$$= 0.0451\left(\frac{2.275^{0.373}}{0.3489^{0.538} * 62.28^{0.835} * 0.999^{0.462}}\right) * \frac{0.777^{0.165}}{7.14^{0.835}}$$

$$= 0.000637 \text{ hr-ft}^2\text{-°F/Btu} \qquad \text{(D.2.2)}$$

where

$$v^{*} = \frac{w^{*}}{3600 * \rho^{*} * A_i}$$

$$= \frac{1.3989E + 08}{3600 * 62.28 * 87.42} = 7.14 \text{ ft/sec} \qquad \text{(D.2.3)}$$

D.2.3 Fouling Resistance. The design fouling factor is determined from the design cleanliness factor as follows:

Copyright ASME International
Provided by IHS under license with ASME
No reproduction or networking permitted without license from IHS
Not for Resale

$$R_f^* = \frac{(1 - c_f^*)}{U^*} = \frac{(1 - 0.85)}{510.56} = 0.00029379 \text{ hr-ft}^2\text{-°F/Btu} \quad \text{(D.2.4)}$$

where

$$U^* = \frac{Q^*}{A_o * LMTD^*}$$

$$= \frac{2.1760E + 09}{239{,}476 * 17.80} \quad \text{(D.2.5)}$$

$$= 510.56 \text{ Btu/hr-ft}^2\text{-°F}$$

$$LMTD^* = \frac{(T_2^* - T_1^*)}{\ln\left(\frac{T_S^* - T_1^*}{T_S^* - T_2^*}\right)}$$

$$= \frac{(80.6 - 65.0)}{\ln\left(\frac{91.72 - 65.0}{91.72 - 80.6}\right)} = 17.80°\text{F} \quad \text{(D.2.6)}$$

and at the design condition

$$T_S^* = f\{P_S^*\} = 91.72°\text{F}$$

from *ASME Steam Tables*. [2]

D.2.4 Shellside Resistance. The shellside resistance adjusted to the design conditions is determined as follows:

1. Calculate the condensate film temperature at design condition as

$$T_f^* = T_s^* - 0.2 * LMTD^*$$

$$= 91.72 - 0.2 * 17.8 \quad \text{(D.2.7)}$$

$$= 88.16°\text{F}$$

2. Calculate the condensate film temperature at design condition as

$$T_f^+ = T_s^+ - 0.2 * LMTD^+$$

$$= 101.14 - 0.2 * 17.1 \quad \text{(D.2.8)}$$

$$= 97.72°\text{F}$$

3. Solve for the adjusted shellside resistance, where μ, K, and ρ are the physical properties at the design and test temperatures taken from Appendix J.

Copyright ASME International
Provided by IHS under license with ASME
No reproduction or networking permitted without license from IHS
Not for Resale

$$R_s^o = R_s^+ * \left(\frac{w_s^+}{w_s^*}\right)^{1/3} * \left(\frac{\mu_1^+}{\mu_1^*}\right)^{1/3} * \left(\frac{K_1^*}{K_1^+}\right) * \left(\frac{\rho_1^*}{\rho_1^+}\right)^{2/3}$$

$$= 0.00072 * \left(\frac{2408314}{2222185}\right)^{1/3} * \left(\frac{1.6956}{1.8923}\right)^{1/3} * \left(\frac{0.35908}{0.36309}\right) * \left(\frac{62.138}{62.026}\right)^{2/3}$$

$$= 0.000706 \text{ hr-ft}^2\text{-°F/Btu} \qquad \text{(D.2.9)}$$

D.2.5 Overall Heat Transfer Coefficient. The overall heat transfer coefficient, adjusted to the design conditions, is equal to:

$$U^o = \frac{1}{R_m^o + R_i^o\left(\frac{d_o}{d_i}\right) + R_f^o + R_s^o}$$

$$R_i^o = R_i^* = 0.000637 \text{ hr.-ft}^2\text{-°F/Btu} \qquad \text{(D.2.10)}$$

$$R_f^o = R_f^* = 0.00029379 \text{ hr-ft}^2\text{-°F/Btu} \qquad \text{(D.2.11)}$$

$$= \frac{1}{0.00016656 + 0.000637\left(\frac{0.875}{0.777}\right) + 0.00029379 + 0.000706}$$

$$= 530.87 \text{ Btu/hr-ft}^2\text{-°F} \qquad \text{(D.2.12)}$$

D.2.6 Effectiveness — NTU Method of Evaluation. The test condenser steam pressure, adjusted to the design reference conditions, is determined as follows:

$$NTU^o = \frac{U^{o*} A_o}{c_p^* * w^*}$$

$$= \frac{530.87 * 234{,}476}{0.9986 * 1.3989E + 08} = 0.89106 \qquad \text{(D.2.13)}$$

$$T_s^o = \frac{T_2^* - T_1^* * e^{-NTU^o}}{(1 - e^{-NTU^o})}$$

$$= \frac{80.6 - 65.0\ e^{-0.89106}}{1 - e^{-0.89106}} = 91.45°\text{F} \qquad \text{(D.2.14)}$$

Copyright ASME International
Provided by IHS under license with ASME
No reproduction or networking permitted without license from IHS
Not for Resale

$$P_S^{\circ} = f\{T_S^{\circ}\} = 0.73 \text{ psia}$$

from *ASME Steam Tables.* [2]

D.2.7 Evaluation of Results. The difference between the test adjusted and design reference steam pressures are evaluated as follows:

$$\Delta P_S = P_S^{*} - P_S^{\circ}$$

$$= 0.74 - 0.73 = 0.01 \qquad \text{(D.2.15)}$$

Thus, the condenser is operating slightly better than the design level of performance.

D.3 TUBESIDE PRESSURE DROP DEVIATION RESULTS CALCULATIONS

The test measured tubeside pressure drop is adjusted for differences between the test and design reference water-flow rates as follows:

$$\Delta P_t^{\circ} = \Delta P_t^{+} \left(\frac{w^{*}}{w^{+}}\right)^{1.8}$$

$$= 15.7 \left(\frac{1.3989E+08}{1.4687E+08}\right)^{1.8} \qquad \text{(D.3.1)}$$

$$= 14.4 \text{ ft, water} = 6.24 \text{ psi}$$

Thus, the condenser tubeside pressure drop is 0.1 ft. water less than the design value.

D.4 UNCERTAINTY ANALYSIS

D.4.1 Uncertainty in Test Adjusted Steam Pressure

D.4.1.1 Sensitivity Factors. The sensitivity factors are computed by substituting the design and test values into the equations provided in Subsection 5.4.

Sensitivity Factor for Steam Flow Rate:

$$\Theta_{w_S^{+}} = F_1 * F_2 * \left(\frac{0.333 * R_S^{\circ}}{W_S^{+}}\right) = 1.7942E-08 \frac{\text{psia}}{\text{lb/hr}} \qquad \text{(D.4.1)}$$

where

$$F_1 = 0.001690\, e^{0.027367 T_S^{\circ}}$$

$$= 0.001690\, e^{0.02736 * 81.82}$$

$$= 0.02084 \text{ psia/°F} \qquad \text{(D.4.2)}$$

Copyright ASME International
Provided by IHS under license with ASME
No reproduction or networking permitted without license from IHS
Not for Resale

$$F_2 = \frac{(T_2^* - T_1^*) * NTU^o * U^o * e^{-NTU^o}}{(1 - e^{-NTU^o})^2} \qquad \text{(D.4.3)}$$

$$= 8544.416$$

Sensitivity Factor for Circulating Water Flow Rate:

$$\Theta_{w^+} = \frac{F_1 * F_2 * R_s^o}{R_s^+} * \left[\frac{\frac{-1}{U^+} + 0.835 * R_t^+ \left(\frac{d_o}{d_i}\right) + R_f^+}{w^+}\right]$$

$$= -1.2662E - 09 \frac{\text{psia}}{\text{lb/hr}} \qquad \text{(D.4.4)}$$

Sensitivity Factor for Inlet Water Temperature:

$$\Theta_{T_1^+} = \frac{F_1 * F_2 * R_s^o}{R_s^+}\left[\frac{1}{U^+ * \ln\left(\frac{T_s^+ - T_1^+}{T_s^+ - T_2^+}\right)(T_s^+ - T_1^+)} - \frac{R_f^+}{T_2^+ - T_1^+}\right]$$

$$= 0.01141 \text{ psia/°F} \qquad \text{(D.4.5)}$$

Sensitivity Factor for Outlet Water Temperature:

$$\Theta_{T_2^+} = \frac{F_1 * F_2 * R_s^o}{R_s^+}\left[\frac{-1}{U^+ * \ln\left(\frac{T_s^+ - T_1^+}{T_s^+ - T_2^+}\right)(T_s^+ - T_2^+)} + \frac{R_f^+}{T_2^+ - T_1^+}\right]$$

$$= -0.0330 \text{ psia/°F} \qquad \text{(D.4.6)}$$

Sensitivity Factor for Steam Pressure:

$$\Theta_{P_s^*} = \frac{F_1 * F_2 * R_s^o}{F_3 * R_s^+}\left[\frac{T_2^+ - T_1^+}{U^+ * \ln\left(\frac{T_s^* - T_1^*}{T_s^* - T_2^*}\right) * (T_s^+ - T_2^+) * (T_s^+ - T_1^+)}\right]$$

$$- \frac{F_1 * F_2 * R_s^o * A_o}{F_3 * R_s^+ * w^+ * c_p^+ * (T_2^+ - T_1^+)}\left(\frac{\sum_{i=1}^{j} LMTD_{f,i}^2 - \sum_{i=1}^{j} LMTD_{c,i}^2}{\sum_{i=1}^{j}(T_s^+ - T_{1,f,i}^+) * \sum_{i=1}^{j}(T_s^+ - T_{2,f,i}^+)}\right)$$

$$= 0.7901 \text{psia/psia} \qquad \text{(D.4.7)}$$

Copyright ASME International
Provided by IHS under license with ASME
No reproduction or networking permitted without license from IHS
Not for Resale

where

$$F_3 = \frac{1}{0.001690\ e^{0.02736\ T_s^+}}$$

$$= \frac{1}{0.001690\ e^{0.02736 * 101.14}} \tag{D.4.8}$$

$$= 37.1824\ °F/psia$$

Sensitivity Factor for Cleanliness Factor Fouled Tube Inlet Temperature:

$$\Theta_{T_{1,f}^+} = \frac{F_1 * F_2 * R_s^o * A_o}{R_s^+ * w^+ * c_p^+ * (T_2^+ - T_1^+)} * \frac{1}{j} * \sum_{i=1}^{j} \left(\frac{\ln\left(\frac{T_s^+ - T_{1,f,i}^+}{T_s^+ - T_{2,f,i}^+}\right) + \frac{T_{2,f,i}^+ - T_{1,f,i}^+}{T_s^+ - T_{1,f,i}^+}}{\ln\left(\frac{T_s^+ - T_{1,f,i}^+}{T_s^+ - T_{2,f,i}^+}\right)^2} \right)$$

$$= 3.9915E{-}06\ psia/°F \tag{D.4.9}$$

Sensitivity Factor for Cleanliness Factor Fouled Tube Outlet Temperature:

$$\Theta_{T^+_{2,f}} = \frac{F_1 * F_2 * R_s^o * A_o}{R_s^+ * w^+ * c_p^+ * (T_2^+ - T_1^+)} * \frac{1}{j} * \sum_{i=1}^{j} \left(\frac{\ln\left(\frac{T_s^+ - T_{1,f,i}^+}{T_s^+ - T_{2,f,i}^+}\right) - \frac{T_{2,f,i}^+ - T_{1,f,i}^+}{T_s^+ - T_{2,f,i}}}{\ln\left(\frac{T_s^+ - T_{1,f,i}^+}{T_s^+ - T_{2,f,i}^+}\right)^2} \right)$$

$$= 3.5361E{-}06\ psia/°F \tag{D.4.10}$$

Sensitivity Factor for Cleanliness Factor Clean Tube Inlet Temperature:

$$\Theta_{T_{1,c}^+} = \frac{F_1 * F_2 * R_s^o * A_o}{R_s^+ * w^+ * c_p^+ * (T_2^+ - T_1^+)} * \frac{1}{j} * \sum_{i=1}^{j} \left(\frac{\ln\left(\frac{T_s^+ - T_{1,c,j}^+}{T_s^+ - T_{2,c,j}^+}\right) + \frac{T_{2,c,j}^+ - T_{1,c,j}^+}{T_s^+ - T_{1,c,j}^+}}{\ln\left(\frac{T_s^+ - T_{1,c,j}^+}{T_s^+ - T_{2,c,j}^+}\right)^2} \right)$$

$$= 6.1345E{-}06\ psia/°F \tag{D.4.11}$$

Sensitivity Factor for Cleanliness Factor Clean Tube Outlet Temperature:

$$\Theta_{T_{2,c}^+} = \frac{F_1 * F_2 * R_s^o * A_o}{R_s^+ * w^+ * c_p^+ * (T_2^+ - T_1^+)} * \frac{1}{j} * \sum_{i=1}^{j} \left(\frac{\ln\left(\frac{T_s^+ - T_{1,c,j}^+}{T_s^+ - T_{2,c,j}^+}\right) - \frac{T_{2,c,j}^+ - T_{1,c,j}^+}{T_s^+ - T_{2,c,j}}}{\ln\left(\frac{T_s^+ - T_{1,c,j}^+}{T_s^+ - T_{2,c,j}^+}\right)^2} \right)$$

$$= 4.9136E{-}06\ psia/°F \tag{D.4.12}$$

D.4.1.2 Bias Limits and Precision Indices. The bias limits and the precision indices for each of the measured parameters are determined in accordance with the methodology prescribed in ASME PTC 19.1.

Copyright ASME International
Provided by IHS under license with ASME
No reproduction or networking permitted without license from IHS
Not for Resale

[4] The values in Table D.5 are provided for example purposes only. Although these values are typical for a test conducted in accordance with this Code, actual values must be determined for a specific test and will depend on the condenser design, the instrumentation used, and the operating conditions at the time of the test. For this example, the bias limits and precision indices are as follows:

D.4.1.3 Uncertainty in Result. An estimate of the uncertainty in the test steam pressure, adjusted to the design reference conditions, is calculated as follows:

Bias Limit:

$$B_{P_S^\circ}^2 = (\Theta_{W_S^\circ} B_{W_S^\circ})^2 + (\Theta_{w^\circ} B_{w^\circ})^2 + (\Theta_{P_S^\circ} B_{P_S^\circ})^2 + \Theta_{T_1^\circ} B_{T_1^\circ})^2 + (\Theta_{T_2^\circ} B_{T_2^\circ})^2 + (\Theta_{T_{1,f}^\circ} B_{T_{1,f}^\circ})^2 + (\Theta_{T_{2,f}^\circ} B_{T_{2,f}^\circ})^2 + (\Theta_{T_{1,c}^\circ} B_{T_{1,c}^\circ})^2 + (\Theta_{T_{2,c}^\circ} B_{T_{2,c}^\circ})^2 \quad \text{(D.4.13)}$$

$$B_{P_S^\circ}^2 = (1.7942E{-}08 * 60{,}207)^2 + (1.26620E{-}09 * 5{,}140{,}450)^2 + (0.7901 * 0.05)^2 + (0.0114 * 0.20)^2 + (0.0330 * 0.50)^2 + (3.9915E{-}06 * 0.20)^2 + (3.5361E{-}06 * 0.75)^2 + (6.1345E{-}06 * 0.20)^2 + (4.914E{-}06 * 0.75)^2$$

$$= 0.001847 \text{ psia}^2$$

and

$$B_{P_S^\circ} = \pm 0.043 \text{ psia}$$

Precision Index:

$$S_{P_S^\circ}^2 = (\Theta_{W_S^\circ} S_{W_S^\circ})^2 + (\Theta_{w^\circ} S_{w^\circ})^2 + (\Theta_{P_S^\circ} S_{P_S^\circ})^2 + (\Theta_{T_1^\circ} S_{T_1^\circ})^2 + (\Theta_{T_2^\circ} S_{T_2^\circ})^2 + (\Theta_{T_{1,f}^\circ} S_{T_{1,f}^\circ})^2 + (\Theta_{T_{2,f}^\circ} S_{T_{2,f}^\circ})^2 + (\Theta_{T_{1,c}^\circ} S_{T_{1,c}^\circ})^2 + (\Theta_{T_{2,c}^\circ} S_{T_{2,c}^\circ})^2 \quad \text{(D.4.14)}$$

$$S_{P_S^\circ}^2 = (1.7942E{-}08 * 9.152)^2 + (1.26620E{-}09 * 558{,}106)^2 + (0.7901 * 0.065)^2 + (0.0114 * 0.0212)^2 + (0.0330 * 0.065)^2 + (3.9915E{-}06 * 0.021)^2 + (3.5361E{-}06 * 0.09)^2 + (6.1345E{-}06 * 0.021)^2 + (4.9135E{-}06 * 0.09)^2$$

$$= 4.914E{-}05 \text{ psia}^2$$

and

Copyright ASME International
Provided by IHS under license with ASME
No reproduction or networking permitted without license from IHS
Not for Resale

$$S_{P_s^o} = \pm 0.0070 \text{ psia}$$

Combined Uncertainty:
Based on the number of readings for each measurement parameter, as provided in Table D.2 for this sample calculation, the pooled degrees of freedom was determined to be greater than 30; therefore, the Student's *t*-value from Table 5.1 is 2.00. The combined uncertainty is then determined as follows:

$$Un_{P_s^o} = \sqrt{B_{P_s^o}^2 + (t_v S_{P_s^o})^2}$$

$$= \sqrt{0.043^2 + (2 * 0.0070)^2} \quad \text{(D.4.15)}$$

$$= \pm 0.044 \text{ psia}$$

D.4.2 Uncertainty in Tubeside Pressure Drop. An estimate of the uncertainty in the test tubeside pressure drop, adjusted to the design reference conditions, is calculated as follows:

$$\Theta_{\Delta P_t^+} = \frac{\Delta P_t^o}{\Delta P_t^+} = \frac{14.2}{15.7} = 0.90446 \quad \text{(D.4.16)}$$

The sensitivity factors are as follows:

$$\Theta_{w^+} = \frac{1.8 * \Delta P_w^o}{w^+} = \frac{1.8 * 14.2}{1.4687E{+}08} \quad \text{(D.4.17)}$$

$$= 1.7403E{-}07 \frac{\text{ft Water}}{\text{lb/hr}}$$

The bias limit and precision index are computed as follows:

$$B_{\Delta P_w^o} = \sqrt{(\Theta_{\Delta P_w^+} B_{\Delta P_w^+})^2 + (\Theta_{w^+} B_{w^+})^2}$$

$$= \sqrt{(0.90446 * 0.2)^2 + (1.7403E{-}07 * 5{,}140{,}450)^2}$$

$$= \pm 0.91 \text{ ft Water} \quad \text{(D.4.18)}$$

$$S_{\Delta P_w^o} = \sqrt{(\Theta_{\Delta P_w^+} S_{\Delta P_w^+})^2 + (\Theta_{w_w^+} S_{w^+})^2}$$

$$= \sqrt{(0.90446 * 0.042)^2 + (1.7403E{-}07 * 558{,}106)^2}$$

$$= \pm 0.104 \text{ ft Water} \quad \text{(D.4.19)}$$

In accordance with the Welsh-Satterthwite formula from ASME PTC 19.1 [4] and using 11 degrees of freedom for both the circulating water flow rate and the tubeside pressure drop, the pooled degrees of freedom for determining the Student's *t*-value is:

Copyright ASME International
Provided by IHS under license with ASME
No reproduction or networking permitted without license from IHS
Not for Resale

Parameter	$\times S$	$(\times S)^2$	$(\times S)^4/11$
Press Drop	.9045 × .042	.0014	$1.893E-07$
Flow	$1.74E-07 \times 556{,}106$	.0094	$8.090E-06$
		.0108	$8.279E-06$

Pooled degrees of freedom = $(0.108)^2/8.279E{-}06 \cong 14$

The Student's *t*-value at 95% coverage and 14 degrees of freedom is 2.145. The combined uncertainty is then computed as follows:

$$Un_{\Delta PP} = \sqrt{(0.91)^2 + (2.145 * 0.104)^2} = \pm 0.94 \text{ ft Water} \qquad \text{(D.4.20)}$$

Copyright ASME International
Provided by IHS under license with ASME
No reproduction or networking permitted without license from IHS
Not for Resale

TABLE D.5
EXAMPLE OF BIAS LIMIT AND PRECISION INDICES

Measured Parameter	Sensitivity Factor	Bias Limit	Precision Index
Steam Flow W_s^+	3.2622*E*–08 psia/lb/hr	±60,208 lb/hr (±2.5%)	±9,152 lb/hr (±0.21%)
CW Water Flow w^+	1.2662*E*–09 psia/lb/hr	±5,140,450 lb/hr (±3.5%)	±558,106 lb/hr (±0.38%)
Inlet CW Temp T_1^+	0.0114 psia/°F	±0.20°F	±0.021°F
Outlet CW Temp T_2^+	0.0330 psia/°F	±0.50°F	±0.065°F
Condenser Pressure P^{s+}	0.7901 psia/psia	±0.05 psia	±0.0085 psia
CF Fouled Tubes Inlet Temp $T_{f,1}^+$	3.9915*E*–06 psia/°F	±0.20°F	+0.021°F
CF Fouled Tubes Outlet Temp $T_{f,2}^+$	3.5361*E*–06 psia/°F	±0.75°F	±0.090°F
CF Clean Tubes Inlet Temp $T_{c,1}^+$	6.1345*E*–06 psia/°F	±0.20°F	±0.021°F
CF Clean Tubes Outlet Temp $T_{c,2}^+$	4.9136*E*–06 psia/°F	±0.75°F	±0.090°F

Copyright ASME International
Provided by IHS under license with ASME
No reproduction or networking permitted without license from IHS
Not for Resale

NONMANDATORY APPENDIX E — DETAIL: UNCERTAINTY ANALYSIS FOR CONDENSING PRESSURE

(This Appendix is not a part of PTC 12.2 and is included for information purposes only.)

The results of the condenser performance test — the test steam pressure adjusted to the design conditions and the tubeside pressure drop adjusted to the design conditions — are determined using the test measurement values in accordance with the calculation methods delineated in Subsections 5.1, 5.2, and 5.3. In accordance with PTC 19.1 [4], error estimates of the measured parameters are propagated into uncertainty estimates of the results by Taylor Series expansions. Bias and precision errors are propagated separately and combined as the last step in the uncertainty analysis. The propagation of the individual measurement parameters into a resulting uncertainty requires the development of sensitivity factors which relates a unit error in each measured parameter to the total error in the result. These can be developed by the central difference method or analytically. The sensitivity factors provided in para. 5.4.2 were determined analytically by partial differentiation of the equations used in calculating the results. This Appendix provides the derivations for these condensing pressure sensitivity equations.

The sensitivity equations for the other test objective parameters shown in Subsection 5.4, such as tube pressure drop, would be more directly determined.

E.1 SENSITIVITY FACTORS FOR ADJUSTED STEAM PRESSURE

The adjusted steam pressure is a function of the following independent measured parameters:

$$P_s^o = f\{W_s^+,\ w^+, T_1^+,\ T_2^+,\ P_s^+, T_{1,f,i}^+ T_{2,f,i}^+,\ T_{1,c,i}^+ T_{2,c,i}^+\}$$

Expansion by the Taylor Series method results in:

$$B_{P_s^o}^2 = \left(\frac{\partial P_s^o}{\partial W_s^+}\right)^2 B_{W_s^+}^2 + \left(\frac{\partial P_s^o}{\partial w^+}\right)^2 B_{W^+}^2 + \left(\frac{\partial P_s^o}{\partial T_1^+}\right)^2 B_{T_1^+}^2 + \left(\frac{\partial P_s^o}{\partial T_2^+}\right)^2 B_{T_2^+}^2 + \left(\frac{\partial P_s^o}{\partial T_s^+}\right)^2 B_{P_s^+}^2 + \left(\frac{\partial P_s^o}{\partial T_{1,f,i}^+}\right)^2 B_{T_{1,f,i}^+}^2 + \left(\frac{\partial P_s^o}{\partial T_{2,f,i}^+}\right)^2 B_{T_{2,f,i}^+}^2 + \left(\frac{\partial P_s^o}{\partial T_{1,c,i}^+}\right)^2 B_{T_{1,c,i}^+}^2 + \left(\frac{\partial P_s^o}{\partial T_{2,c,i}^+}\right)^2 B_{T_{2,c,i}^+}^2 \qquad \text{(E.1.1)}$$

where

$$B_{P_s^o} = dP_s^o$$

$$B_{W_s^+} = dW_s^+$$

etc.

are the uncertainties in the measured values of each of the parameters.

The same equation also applies for the propagation of the precision index, with the precision indices, S_j, substituted for the bias limits, B_j.

The calculation procedures in Subsections 5.1 and 5.2 are expressed in a series of equations.Although these equations could be combined into a single equation which relates the test adjusted steam pressure as a function of the measured parameters shown in Equation E.1.1, this would result in an exceptionally involved equation to differentiate. Instead, the partial derivatives of succeeding equations are determined and combined by the chain rule. The equations from Subsections 5.1and 5.2 required for the development of the sensitivity factors are repeated in the order of differentiation as follows:

Copyright ASME International
Provided by IHS under license with ASME
No reproduction or networking permitted without license from IHS
Not for Resale

$$P_S^o = f\{T_S^o\} \tag{E.1.2}$$

from *ASME Steam Tables.* [2]

$$T_S^o = \frac{T_2^* - T_1^* * e^{-NTU^o}}{(1 - e^{-NTU^o})} \tag{E.1.3}$$

$$NTU^o = \frac{U^o * A_o}{c_p^* * w^*} \tag{E.1.4}$$

$$U^o = \frac{1}{R_m^o + R_t^o\left(\frac{d_o}{d_i}\right) + R_f^o + R_S^o} \tag{E.1.5}$$

$$R_S^o = R_S^+ * \left(\frac{W_S^+}{W_S^*}\right)^{1/3} * \left(\frac{\mu_f^*}{\mu_f^+}\right)^{1/3} * \left(\frac{k^+}{k^*}\right) * \left[\frac{(\rho^*)}{(\rho^+)}\right]^{2/3} \tag{E.1.6}$$

$$R_s^+ = \frac{1}{U^+} - R_m^+ - R_t^+\left(\frac{d_o}{d_i}\right) - R_f^+ \tag{E.1.7}$$

$$\frac{1}{U^+} = \frac{A_o}{w^+ * c_p^+ * \ln\left(\frac{(T_S^+ - T_1^+)}{(T_S^+ - T_2^+)}\right)} \tag{E.1.8}$$

$$R_t^+ = 0.0451\left(\frac{\mu^{+\,0.373}}{k^{+\,0.538} * c_p^{+\,0.462}}\right) * d_i^{0.165} * w^{+\,-0.835} \tag{E.1.9}$$

where the outside effective area of each one of the fouled or clean test tubes divided by its heat pick-up is considered to approximately equal A_o/Q^+, then,

$$R_f^+ = \frac{A_o}{Q^+} * \frac{1}{j} * \sum_{i=1}^{j} (LMTD_{f,i}^+ - LMTD_{c,i}^+) \tag{E.1.10}$$

where

$$LMTD_{f,i}^+ = \frac{(T_{2,f,i}^+ - T_{1,f,i}^+)}{\ln\left(\frac{T_S^+ - T_{1,f,i}^+}{T_S^+ - T_{2,f,i}^+}\right)} \tag{E.1.11}$$

$$LMTD_{c,i}^+ = \frac{(T_{2,c,i}^+ - T_{1,c,i}^+)}{\ln\left(\frac{T_S^+ - T_{1,c,i}^+}{T_S^+ - T_{2,c,i}^+}\right)} \tag{E.1.12}$$

The development of the partial derivatives begins with Eq. E.1.2. An approximate regression of the partial derivative of the *ASME Steam Table* [2] values was developed for the range of 32° to 150°F as follows:

$$dP_s^o = \left(\frac{\partial P_s^o}{\partial T_s^o}\right) dT_s^o$$

and

$$\frac{\partial P_s^o}{\partial T_s^o} = \frac{\Delta P_s^o}{\Delta T_s^o} = F_1 \tag{E.1.13}$$

$$= 0.001690\, e^{0.02736\, T_S^o}\left(\frac{\text{psi}}{\text{°F}}\right)$$

Then from Eq. E.1.3:

$$dT_s^o = \left(\frac{\partial T_s^o}{\partial NTU^o}\right) dNTU^o$$

where

$$\left(\frac{\partial T_s^o}{\partial NTU^o}\right) = \frac{T_2^* - T_s^o}{1 - e^{-NTU^o}}$$

(Note that T_1^* and T_2^* are exact design values; therefore, their partial derivatives are equal to zero.) From Eq. E.1.4:

Copyright ASME International
Provided by IHS under license with ASME
No reproduction or networking permitted without license from IHS
Not for Resale

$$dNTU^o = \left(\frac{\partial NTU^o}{\partial U^o}\right) dU^o$$

where

$$\left(\frac{\partial NTU^o}{\partial U^o}\right) = \frac{NTU^o}{U^o}$$

(Note that A_o, c_p^*, and w^* are exact design values; therefore, their partial derivatives are equal to zero.) From Eq. E.1.5:

$$dU^o = \left(\frac{\partial U^o}{\partial R_s^o}\right) dR_s^o$$

where

$$\left(\frac{\partial U^o}{\partial R_s^o}\right) = -(U^o)^2$$

(Note that R_m, R_t, and R_f are exact design values; therefore, their partial derivatives are equal to zero.)

These terms are then combined using the chain rule as follows:

$$F_2 = \left(\frac{\partial T_s^o}{\partial R_s^o}\right) = \left(\frac{\partial T_s^o}{\partial NTU^o}\right) * \left(\frac{\partial NTU^o}{\partial U^o}\right) * \left(\frac{\partial U^o}{\partial R_s^o}\right)$$

$$F_2 = \frac{(T_2^* - T_1^*) * NTU^o * U^o * e^{-NTU^o}}{(1 - e^{-NTU^o})^2} \qquad \text{(E.1.14)}$$

$$\left(\frac{°F}{\frac{\text{hr-ft}^2\text{-°F}}{\text{Btu}}}\right)$$

From Eq. E.1.6:

$$(dR_s^o)^2 = \left(\frac{\partial R_s^o}{\partial R_s^+}\right)^2 (dR_s^+)^2 \qquad \text{(E.1.15)}$$

$$+ \left(\frac{\partial R_s^o}{\partial W_s^+}\right)^2 (dW_s^+)^2$$

where

$$\left(\frac{\partial R_s^o}{\partial R_s^+}\right) = \frac{R_s^o}{R_s^+} \qquad \text{(E.1.16)}$$

$$\left(\frac{\partial R_s^o}{\partial W_s^+}\right) = \frac{0.333 * R_s^o}{W_s^+}\left(\frac{\text{hr-ft}^2\text{-°F}}{\frac{\text{Btu}}{\text{lb/hr}}}\right) \qquad \text{(E.1.17)}$$

The design steam flow rate is an exact design value; therefore, the partial derivative is equal to zero. The error in the circulating water and steam properties at the design-adjusted and test conditions is not exact; however, the magnitude of the partial derivatives of these properties will have a negligible effect on the resulting sensitivity factors for the measured parameters. As a result, the uncertainty analysis has been simplified by assuming that these partial derivatives are equal to zero.

The derivation of the sensitivity factor for the test measured steam flow rate is completed at this point, since:

$$B_{W_s^+} \text{ and } S_{W_s^+} = dW_s^+$$

Thus, combining Eqs. E.1.13, E.1.14, and E.1.17:

$$\Theta_{W_s^+} = \left(\frac{\partial P_s^o}{\partial T_s^o}\right) * \left(\frac{\partial T_s^o}{\partial R_s^o}\right) * \left(\frac{\partial R_s^o}{\partial W_s^+}\right) \qquad \text{(E.1.18)}$$

or

$$\Theta_{W^*} = F_1 * F_2 * \left(\frac{0.333 * R_s^o}{W_s^+}\right)\left(\frac{\text{psia}}{\text{lb/hr}}\right)$$

The derivation of the sensitivity factors for the remaining parameters follows, beginning with Eq. E.1.7.

$$(dR_s^+)^2 = \left(\frac{\partial R_s^+}{\partial w^+}\right)^2 dw^{+2} + \left(\frac{\partial R_s^+}{\partial T_1^+}\right)^2 dT_1^{+2}$$

$$+ \left(\frac{\partial R_s^+}{\partial T_2^+}\right)^2 dT_2^{+2} + \left(\frac{\partial R_s^+}{\partial T_s^+}\right)^2 dT_s^{+2}$$

$$+ \left(\frac{\partial R_s^+}{\partial T_{1,f,i}^+}\right)^2 dT_{1,f,i}^{+2} + \left(\frac{\partial R_s^+}{\partial T_{2,f,i}^+}\right)^2 dT_{2,f,i}^{+2} \qquad \text{(E.1.19)}$$

Copyright ASME International
Provided by IHS under license with ASME
No reproduction or networking permitted without license from IHS
Not for Resale

$$+\left(\frac{\partial R_s^+}{\partial T_{1,c,i}^+}\right)^2 dT_{1,c,i}^{+2} + \left(\frac{\partial R_s^+}{\partial T_{2,c,i}^+}\right)^2 dT_{2,c,i}^{+2}$$

Evaluation of the partial derivative terms of Eq. E.1.19 first requires substitution of Equations E.1.11 and E.1.12 into Eq. E.1.10, and then substitution of Eq. E.1.8, E.1.9, and E.1.10 into Equation E.1.7. The resulting equation can then be solved for each of the partial derivatives. These derivatives and the resulting sensitivity factors follow.

Sensitivity Factor for Circulating Water Flow:

$$\frac{\partial R_s^+}{\partial w^+} = \frac{\left(\frac{-1}{U^+} + 0.835 R_t^+ \left(\frac{d_o}{d_i}\right) + R_f^+\right)}{w^+}$$

Thus combining this with Eqs. E.1.13, E.1.14, and E.1.16 yields the following:

$$\Theta_{w^+} = \left(\frac{\partial P_s^o}{\partial T_s^o}\right) * \left(\frac{\partial T_s^o}{\partial R_s^o}\right) * \left(\frac{\partial R_s^o}{\partial R_s^+}\right) * \left[\left(\frac{\partial R_s^+}{\partial U^+} * \frac{\partial U^+}{\partial w^+}\right) + \left(\frac{\partial R_s^+}{\partial R_t^+} * \frac{\partial R_t^+}{\partial w^+}\right) + \left(\frac{\partial R_s^+}{\partial R_f^+} * \frac{\partial R_f^+}{\partial w^+}\right)\right] \quad \text{(E.1.20)}$$

which is equal to

$$\Theta_{w^+} = \frac{F_1 * F_2 * R_s^o}{R_s^+} * \frac{\left(\frac{-1}{U^+} + 0.835\, R_t^+ \left(\frac{d_o}{d_i}\right) + R_f^+\right)}{w^+} \left(\frac{\text{psia}}{\text{lb/hr}}\right) \quad \text{(E.1.21)}$$

Sensitivity Factor for Inlet Water Temperature:

$$\frac{\partial R_s^+}{\partial T_1^+} = \left[\frac{1}{U^+ * \ln\left(\frac{T_s^+ - T_1^+}{T_s^+ - T_2^+}\right) * (T_s^+ - T_1^+)} - \frac{R_f^+}{T_2^+ - T_1^+}\right]$$

Then applying Eq. E.1.20 and combining Eqs. E.1.13, E.1.14, and E.1.16:

$$\Theta_{T_1^+} = \frac{F_1 * F_2 * R_s^o}{R_s^+} \left[\frac{1}{U^+ * \ln\left(\frac{T_s^+ - T_1^+}{T_s^+ - T_2^+}\right)(T_s^+ - T_1^+)} + \frac{R_f^+}{T_2^+ - T_1^+}\right] \left(\frac{\text{psia}}{\text{°F}}\right) \quad \text{(E.1.22)}$$

Sensitivity Factor for Outlet Water Temperature:

$$\frac{\partial R_s^+}{\partial T_2^+} = \left[\frac{-1}{U^+ * \ln\left(\frac{T_s^+ - T_1^+}{T_s^+ - T_2^+}\right)(T_s^+ - T_2^+)} + \frac{R_f^+}{T_2^+ - T_1^+}\right]$$

Then applying Eq. E.1.20 and combining Eqs. E.1.13, E.1.14, and E.1.16:

$$\Theta_{T_2^+} = \frac{F_1 * F_2 * R_s^o}{R_s^+} * \left[\frac{-1}{U^+ * \ln\left(\frac{T_s^+ - T_1^+}{T_s^+ - T_2^+}\right) * (T_s^+ - T_2^+)} + \frac{R_f^+}{T_2^+ - T_1^+}\right] \left(\frac{\text{psia}}{\text{°F}}\right) \quad \text{(E.1.23)}$$

Sensitivity Factor for Steam Pressure:

$$\frac{\partial R_s^+}{\partial T_s^+} = \left[\frac{T_2^+ - T_1^+}{U^+ * \ln\left(\frac{T_s^+ - T_1^+}{T_s^+ - T_2^+}\right) * (T_s^+ - T_2^+) * (T_s^+ - T_1^+)}\right] - \frac{A_o}{w^+ * c_p^+ * (T_2^+ - T_1^+)} * \left(\frac{\sum_{i=1}^{j} LMTD_{f,i}^2 - \sum_{i=1}^{j} LMTD_{c,i}^2}{\sum_{i=1}^{j} (T_s^+ - T_{1,f,i}^+) * \sum_{i=1}^{j} (T_s^+ - T_{2,f,i}^+)}\right)$$

and from Eq. E.1.13:

Copyright ASME International
Provided by IHS under license with ASME
No reproduction or networking permitted without license from IHS
Not for Resale

$$\frac{\partial T_s^+}{\partial P_s^+} = F_3 = \frac{1}{0.001690\ e^{0.02736\ T_s^+}}$$

Then applying Eq. E.1.20 and combining Eqs. E.1.13, E.1.14, and E.1.16:

$$\Theta_{P_s^+} = \frac{F_1 * F_2 * R_s^o}{F_3 * R_s^+}$$

$$\left[\frac{T_2^+ - T_1^+}{U^+ * \ln\left(\frac{T_s^+ - T_1^+}{T_s^+ - T_2^+}\right)(T_s^+ - T_2^+)(T_s^+ - T_1^+)}\right]$$

$$- \frac{F_1 * F_2 * R_s^o * A_o}{F_3 * R_s^+ * w^+ * c_p^+ * (T_2^+ - T_1^+)} \qquad \text{(E.1.24)}$$

$$\left(\frac{\sum_{i=1}^{j} LMTD_{f,i}^2 - \sum_{i=1}^{j} LMTD_{c,i}^2}{\sum_{i=1}^{j}(T_s^+ - T_{1,f,i}^+) * \sum_{i=1}^{j}(T_s^+ - T_{2,f,i}^+)}\right)\left(\frac{\text{psi}}{\text{°F}}\right)$$

Sensitivity Factor for Cleanliness Factor Fouled Tube Inlet Temperature:

$$\frac{\partial R_s^+}{\partial T_{1,f}^+} = \frac{A_o}{w^+ * c_p^+ * (T_2^+ - T_1^+)} * \frac{1}{j} * \sum_{i=1}^{j}$$

$$\left(\frac{\ln\left(\frac{T_s^+ - T_{1,f,i}^+}{T_s^+ - T_{2,f,i}^+}\right) + \frac{T_{2,f,i}^+ - T_{1,f,i}}{T_s^+ - T_{1,f,i}}}{\ln\left(\frac{T_s^+ - T_{1,f,i}}{T_s^+ - T_{2,f,i}^+}\right)^2}\right)$$

Then applying Eq. E.1.20 and combining Eqs. E.1.13, E.1.14, and E.1.16:

$$\Theta_{T_{1,f}^+} = \frac{F_1 * F_2 * R_s^o * A_o}{R_s^+ * w^+ * c_p^+ * (T_2^+ - T_1^+)} * \frac{1}{j} * \sum_{i=1}^{j} \qquad \text{(E.1.25)}$$

$$\left(\frac{\ln\left(\frac{T_s^+ - T_{1,f,i}^+}{T_s^+ - T_{2,f,i}^+}\right) + \frac{T_{2,f,i}^+ - T_{1,f,i}}{T_s^+ - T_{1,f,i}}}{\ln\left(\frac{T_s^+ - T_{1,f,i}}{T_s^+ - T_{2,f,i}^+}\right)^2}\right)\left(\frac{\text{psia}}{\text{°F}}\right)$$

Sensitivity Factor for Cleanliness Factor Fouled Tube Outlet Temperature:

$$\frac{\partial R_s^+}{\partial T_{2,f}^+} = \frac{A_o}{w^+ * c_p^+ * (T_2^+ - T_1^+)} * \frac{1}{j} * \sum_{i=1}^{j}$$

$$\left(\frac{\ln\left(\frac{T_s^+ - T_{1,f,i}^+}{T_s^+ - T_{2,f,i}^+}\right) + \frac{T_{2,f,i}^+ - T_{1,f,i}}{T_s^+ - T_{2,f,i}}}{\ln\left(\frac{T_s^+ - T_{1,f,i}}{T_s^+ - T_{2,f,i}^+}\right)^2}\right)$$

Then applying Eq. E.1.20 and combining Eqs. E.1.13, E.1.14, and E.1.16:

$$\Theta_{T_{2,f}^+} = \frac{F_1 * F_2 * R_s^o * A_o}{R_s^+ * w^+ * c_p^+ * (T_2^+ - T_1^+)} * \frac{1}{j} * \sum_{i=1}^{j} \qquad \text{(E.1.26)}$$

$$\left(\frac{\ln\left(\frac{T_s^+ - T_{1,f,i}^+}{T_s^+ - T_{2,f,i}^+}\right) + \frac{T_{2,f,i}^+ - T_{1,f,i}}{T_s^+ - T_{2,f,i}}}{\ln\left(\frac{T_s^+ - T_{1,f,i}}{T_s^+ - T_{2,f,i}^+}\right)^2}\right)\left(\frac{\text{psia}}{\text{°F}}\right)$$

Sensitivity Factor for Cleanliness Factor Clean Tube Inlet Temperature:

$$\frac{\partial R_s^+}{\partial T_{1,c}^+} = \frac{A_o}{w^+ * c_p^+ * (T_2^+ - T_1^+)} * \frac{1}{j} * \sum_{i=1}^{j}$$

$$\left(\frac{\ln\left(\frac{T_s^+ - T_{1,c,j}^+}{T_s^+ - T_{2,c,j}^+}\right) + \frac{T_{2,c,j}^+ - T_{1,c,j}}{T_s^+ - T_{1,c,j}}}{\ln\left(\frac{T_s^+ - T_{1,c,j}}{T_s^+ - T_{2,c,j}^+}\right)^2}\right)$$

Then applying Eq. E.1.20 and combining Eqs. E.1.13, E.1.14, and E.1.16:

$$\Theta_{T_{1,c}^+} = \frac{F_1 * F_2 * R_s^o * A_o}{R_s^+ * w^+ * c_p^+ * (T_2^+ - T_1^+)} * \frac{1}{j} * \sum_{i=1}^{j} \qquad \text{(E.1.27)}$$

$$\left(\frac{\ln\left(\frac{T_s^+ - T_{1,c,i}^+}{T_s^+ - T_{2,c,i}^+}\right) + \frac{T_{2,c,i}^+ - T_{1,c,i}}{T_s^+ - T_{2,c,i}}}{\ln\left(\frac{T_s^+ - T_{1,c,i}}{T_s^+ - T_{2,c,i}^+}\right)^2}\right)\left(\frac{\text{psia}}{\text{°F}}\right)$$

Sensitivity Factor for Cleanliness Factor Clean Tube Outlet Temperature:

Copyright ASME International
Provided by IHS under license with ASME
No reproduction or networking permitted without license from IHS
Not for Resale

$$\frac{\partial R_s^o}{\partial T_{2,c}^+} = \frac{A_o}{w^+ * C_p^+ * (T_2^+ - T_1^+)} * \frac{1}{j} * \sum_{i=1}^{j}$$

$$\left(\frac{\ln\left(\frac{T_s^+ - T_{1,c,i}^+}{T_s^+ - T_{2,c,i}^+}\right) + \frac{T_{2,c,i}^+ - T_{1,c,i}}{T_s^+ - T_{2,c,i}}}{\ln\left(\frac{T_s^+ - T_{1,c,i}}{T_s^+ - T_{2,c,i}^+}\right)^2} \right)$$

Then applying Eq. E.1.20 and combining Eqs. E.1.13, E.1.14, and E.1.16:

$$\Theta_{T_{2,c}^+} = \frac{F_1 * F_2 * R_s^o * A_o}{R_s^+ * w^+ * c_p^+ * (T_2^+ - T_1^+)} * \frac{1}{j} * \sum_{i=1}^{j} \quad \text{(E.1.28)}$$

$$\left(\frac{\ln\left(\frac{T_s^+ - T_{1,c,j}^+}{T_s^+ - T_{2,c,j}^+}\right) - \frac{T_{2,c,j}^+ - T_{1,c,j}}{T_s^+ - T_{2,c,j}}}{\ln\left(\frac{T_s^+ - T_{1,c,j}}{T_s^+ - T_{2,c,j}^+}\right)^2} \right) \left(\frac{\text{psia}}{\text{°F}}\right)$$

E.2 SENSITIVITY FACTORS FOR TUBESIDE PRESSURE DROP

The adjusted tubeside pressure drop is calculated as follows:

$$\Delta P_w^o = \Delta P_w^+ \left(\frac{w^*}{w^+}\right)^{1.8}$$

Expansion by the Taylor Series method results in the following:

$$B_{\Delta P_w^o}^2 = \left(\frac{\partial \Delta P_w^o}{\partial \Delta P_w^+}\right)^2 * B_{\Delta P_w^+}^2 \quad \text{(E.2.1)}$$

$$+ \left(\frac{\partial \Delta P_w^o}{\partial w^+}\right)^2 * B_w^{+2}$$

The same equation also applies for the propagation of the precision index, with the precision indices, S_j, substituted for the bias limits, B_j.

The sensitivity factors are then as follows:

$$\Theta_{\Delta P_w^+} = \frac{+\Delta P_w^o}{\partial \Delta P_w^+} = \frac{\Delta P_w^o}{\Delta P_w^+}\left(\frac{\text{psi}}{\text{psi}}\right) \quad \text{(E.2.2)}$$

$$\Theta_{w^+} = \frac{\partial \Delta P_w^o}{\partial w^+} = \frac{1.8 * \Delta P_w^o}{w^+}\left(\frac{\text{psi}}{\text{lb/hr}}\right) \quad \text{(E.2.3)}$$

Copyright ASME International
Provided by IHS under license with ASME
No reproduction or networking permitted without license from IHS
Not for Resale

NONMANDATORY APPENDIX F — DETAIL: GEOTHERMAL SURFACE CONDENSERS

(This Appendix is not a mandatory part of PTC12.2, Steam Surface Condensers; and is included for information purposes only.)

F.1 GENERAL

Geothermal steam exhausting from the turbine contains non-condensible gas quantities that are significantly greater than those of conventional units. Non-condensible gases and fluids of geothermal units may create fouling films or scaling of the outside surface of the condenser tubing due to chemical and mechanical actions. Caution must be used when evaluating geothermal condenser performance since the effect of fouling on the outside surfaces of condenser tubes is not addressed in this Code. In this manner, an additional test point is recommended for monitoring the flow rate and constituents of the non-condensible gases exhausting from the turbine. In addition, the quality of the turbine exhaust steam should be determined to verify that it closely compares to the steam quality as specified for the condenser performance design.

F.2 PERFORMANCE TEST POINTS

The performance test points and test point locations for geothermal surface condenser will be similar to those illustrated in Fig. 4.1 of this Code.

The flow of non-condensible gases should be measured to compare performance test flow with the specified design flow rate. If the flow is substantially higher or lower than the design flow, the non-condensible removal system (ejector system or vacuum pumps) maybe adversely affected, which in turn can cause degradation of condenser performance.

F.3 GUIDELINES

Since there are very few geothermal applications of surface condensers, a limited amount of reliable performance and design information is available. For this reason, this Code recommends that any performance levels for geothermal condensers should be mutually agreed upon by the purchaser and manufacturer or the parties to the test, as applicable.

Copyright ASME International
Provided by IHS under license with ASME
No reproduction or networking permitted without license from IHS
Not for Resale

NONMANDATORY APPENDIX G — DIAGNOSTIC: AIR BINDING

(This Appendix is not a part of PTC 12.2 and is included for information purposes only.)

G.1 INTRODUCTION

The air binding (air blanketing) test method employs the use of thermocouples to identify air binding zones. Air-bound regions of a tube bundle are those which have a high air mole fraction. The temperature in the air-bound region approximates the cooling-water inlet temperature and there is significantly reduced cooling-water temperature rise in the portion of the tube(s) which extend(s) through the air-bound region. Therefore, an accurate measure of tube temperature rise can be used to determine the location and extent of the air-bound region.

G.2 TEST OBJECTIVES

Air binding is the symptom of one or more of the following:

(a) Air in-leakage in excess of air-removal system's capacity of the bundle.

(b) Diminished air-removal equipment capacity due to problems such as excessive vapor carryover.

(c) Insufficient space around the tube bundle to permit steam to enter at all points around the periphery of the bundle and to achieve full steam penetration.

(d) Off-design operating conditions such a slow load operation and start-ups (i.e., cycling).

(e) Steam by-passing to the air-removal section because of design or construction deficiencies or because of component failures (i.e., baffle corrosion).

(f) A high hotwell level preventing steam from entering the bottom portion of the bundle.

(g) Excessive pressure drop in the air-removal system (air-removal zone or piping between the air-removal zone and air-removal equipment).

(h) Ineffective air-removal zone design.

The principal objective of an air-binding test is to identify the presence of air binding and to quantify the extent of air binding at full load. Other objectives may include identifying and quantifying the extent of air binding and deaeration performance during one and two vacuum pump operations, or one and two air-ejector operations at various loads and under various controlled air in-leakage rates.

G.3 DESCRIPTION OF TEST METHOD, EQUIPMENT, AND INSTRUMENTATION

The application of $^1/_{16}$-in. diameter type E thermocouples, located in a uniform pattern, insulated and encased in flexible shields and installed as the hot junction in the discharge flow path of the selected tubes, will identify air-bound regions. The discharge path thermocouples are installed with the aid of nylon or plastic fittings (see Fig. G.1). The thermocouples may be attached to the tubesheet with tube collars and "p" clips and/or epoxy and routed to a connection in the waterbox. Several alternate methods have been used to install the thermocouples.

The thermocouples are specified to be accurate to ±0.3°F (±0.15°C). They are installed in a uniform pattern with at least one thermocouple per 100 tubes. The air-cooling zone is provided with a minimum of one thermocouple per 50 tubes. One thermocouple is also installed in the inlet waterbox of the same bundle. This can provide a reference junction to measure the temperature rise. Another thermocouple is installed in the inlet waterbox to measure absolute inlet-water temperature. Air binding which runs the full length of the bundle will result in three tube sections having virtually no temperature rise. Air binding is also often unevenly distributed along the length of the bundle and then may result in a significantly less than expected temperature rise.

Copyright ASME International
Provided by IHS under license with ASME
No reproduction or networking permitted without license from IHS
Not for Resale

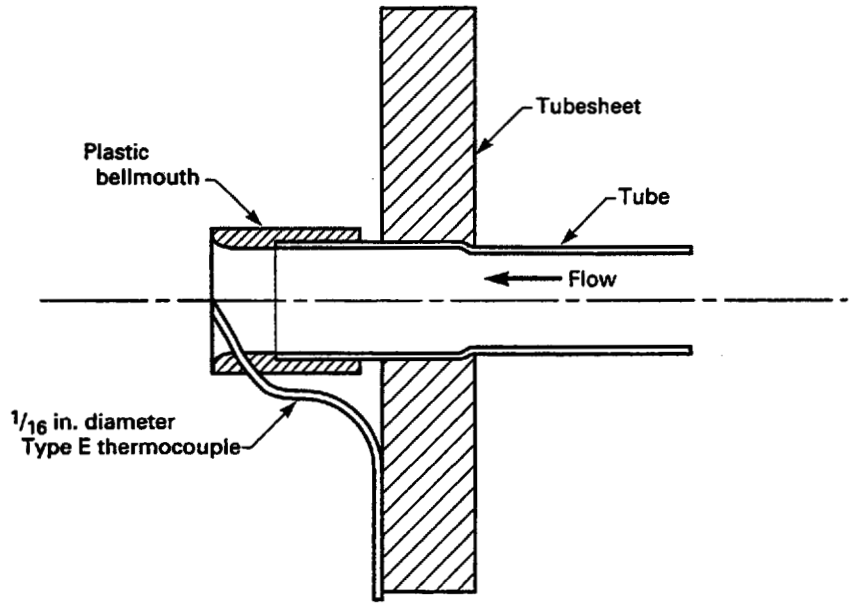

FIG. G.1 TUBE OUTLET TEMPERATURE MEASUREMENT

Copyright ASME International
Provided by IHS under license with ASME
No reproduction or networking permitted without license from IHS
Not for Resale

NONMANDATORY APPENDIX H — DIAGNOSTIC: NON-CONDENSIBLE REMOVAL EQUIPMENT

(This Appendix is not a part of PTC 12.2 and is included for information purposes only.)

H.1 GENERAL

Under certain conditions the pressure in the condenser could be set by the performance of the non-condensible removal equipment. This equipment is either a steam-jet ejector system, a liquid-ring vacuum pump, or a combination of both, often referred to as a hybrid system. To avoid this situation the removal equipment should be capable of following the condenser performance over its full range of anticipated flow rates, accompanying normal air-in leakage, and cooling-water temperature.

H.2 STEAM-JET EJECTORS

The operating principle of a steam-jet ejector is that the pressure energy in the motive steam is converted into kinetic energy in the nozzle and this high-velocity jet of steam entrains the non-condensible gas being pumped. The resulting mixture of steam and gas enters the diffuser where the velocity energy is converted to pressure energy so that the pressure of the mixture at the ejector discharge is higher than the pressure at its suction.

An ejector stage has operating limitations on its compression range. Consequently, two or more stages must be arranged in series to achieve a desired suction pressure at the condenser. Condensers are used between each stage to condense the motive steam load from the upstream ejector.

H.2.1 Performance Variables. Variables that can affect steam-jet ejector performance are as follows:

(a) Suction pressure and temperature
(b) Discharge pressure, back pressure on system
(c) Motive steam pressure, temperature, and moisture
(d) Air-vapor flow rate
(e) Intercondenser/aftercondenser cooling-water inlet temperature
(f) Intercondenser/aftercondenser cooling-water flow rate

H.2.2 Critical Measurements. The critical measurements needed to assess steam-jet ejector performance are as follows:

(a) Suction pressure and temperature
(b) Motive steam pressure and temperature
(c) Air-vapor flow rate
(d) Intercondenser cooling-water inlet temperature and flow rate

H.3 LIQUID RING VACUUM PUMP

The liquid ring vacuum pump is a specific type of rotary positive displacement pump using liquid as the principal element in non-condensible gas compression. The compression is performed by the liquid ring as a result of the relative eccentricity between the pump casing and multibladed impeller.

The eccentricity results in near complete filling then partial emptying of each impeller blade chamber during each revolution. The partial filling and emptying creates a piston action within each set of impeller blades.

A portion of the liquid in the casing is continuously discharged with the gas and the cooler service liquid is introduced to remove the heat generated during operation.

H.3.1 Performance Variables. Variables that can affect vacuum pump performance are as follows:

(a) Suction pressure and temperature
(b) Discharge pressure, back pressure and air system
(c) Speed
(d) Absorbed horsepower
(e) Seal-water flow and temperature
(f) Cooling-water flow and temperature
(g) Air-vapor flow rate

Copyright ASME International
Provided by IHS under license with ASME
No reproduction or networking permitted without license from IHS
Not for Resale

H.3.2 Critical Measurements. The critical measurements needed to assess vacuum pump performance are as follows:

(a) Suction pressure and temperature
(b) Seal-water flow and temperature
(c) Cooling-water flow and temperature
(d) Air-vapor flow rate

H.4 AIR-VAPOR OUTLET

The condition of the air-vapor mixture at the vent connection from the condenser has little effect on the performance evaluation of the condenser. The condition can, however, have a dramatic effect on the performance of the venting equipment and a high vapor-to-air mixture could be an indication of a problem with the condenser.

A temperature at the condenser vent connection higher than or equal to the condenser outlet cooling-water temperature is an indication of a high vapor load that could adversely affect non-condensible removal equipment performance.

H.4.1 Air-Vapor Mixture. The condition of the air-vapor mixture exiting the condenser can be determined by accurately measuring its pressure and temperature at the condenser vent connection.

The amount of vapor to saturate the non-condensibles can be calculated from the following formula:

$$W_V = \frac{m_V}{m_G} * \frac{P_v}{P_T - P_v}$$

where

W_v = unit weight of vapor per unit weight of non-condensible.
m_v = molecular weight of vapor at condenser vent.
m_G = molecular weight of non-condensible gas at condenser vent.
P_T = absolute total pressure at the condenser vent.
P_v = absolute vapor pressure corresponding to the temperature at the condenser vent.

For a water-vapor and air mixture, where molecular weight steam = 18 and molecular weight air = 29

$$W_V = 0.62 * \frac{P_v}{P_T - P_v}$$

H.5 AIR IN-LEAKAGE

With the exception of boiling water reactor operations, in-leakage can be determined by measuring the non-condensible flow at the discharge of the aftercondenser with a steam-jet ejector system or the discharge of the separator with a vacuum pump system.

For an orifice with an average discharge coefficient of 0.607 with flange tap connections, use the following:

$$SCFM_{\text{dry air}} = (128.39/\rho)\, d^2\sqrt{\Delta H\rho/(1 - \beta^4)}$$
$$[(P_T - P_v)/(T + 460)]$$

where

ρ = density of gas at actual condition (lb/ft^3)
d = orifice diameter in (in.)
ΔH = differential pressure (in. of H_2O)
β = beta ratio (orifice dia./pipe dia.)
P_T = total pressure of mixture (psia)
P_v = partial pressure of water in mixture (psia)
T = temperature of mixture (°F)

Copyright ASME International
Provided by IHS under license with ASME
No reproduction or networking permitted without license from IHS
Not for Resale

NONMANDATORY APPENDIX I — DIAGNOSTIC: TUBE FOULING

(This Appendix is not a part of PTC 12.2 and is included for information purposes only.)

TUBE SAMPLING METHOD

The fouling factor can be acquired through testing individual tubes before and after cleaning in a heat transfer measuring device. These devices are test rigs designed to measure heat transfer of a single tube sample taken from a condenser. The rigs are designed to measure heat load, inlet temperature, outlet temperature, cooling-water flow, and effective surface area at a minimum. Various methods are used to simulate steam temperature ranging from actual steam to heat tape, depending on the design of the device. These measurements can then be used to calculate the overall heat transfer coefficient of the sample tube. It should be noted that this method is not the prescribed method of PTC 12.2 but is noted as an accepted diagnostic test for result confirmation.

This method requires removing a tube from an agreed-upon area of the condenser. Careful consideration should be given to the selection of the tube to be tested. If the tube is fouled more than average, the test would yield a deflated fouling factor, while a cleaner than average tube would yield an inflated fouling factor. The section of the tube to be tested may skew results; for example, in the case of calcium-based scales, scale will build rapidly from inlet to outlet ends of the tube. This effect can be resolved by testing several sections of the tube and averaging the results after the tube has been selected, removed, and put into the heat transfer test rig as received.

Care must be taken to insure the fouling remains on the tubewall in order to achieve representative test results.

Once the tube is in the device and steady state has been reached at the simulated steam temperatures, use:

$$U = \frac{w\,C_p}{A}\left[\ln\frac{(T_s - T_1)}{(T_s - T_2)}\right]$$

After all sections have been tested in as-received condition and a representative heat transfer coefficient (U_f) has been calculated, the tubes can be removed from the machine and acid cleaned. After acid cleaning, the test can be repeated to obtain U_c, the heat transfer coefficient of a clean tube.

The fouling factor is the ratio of heat transfer coefficient of fouled tube to the heat transfer coefficient of the clean tube:

$$U_f/U_c$$

Some of the machines will enable three testing stages to determine heat transfer resistance of tube material, inside diameter fouling, and outside diameter fouling for complete picture of where heat transfer capacity is lost. The tube is tested as received for the heat transfer coefficient in the as-found condition. The tube can then be removed from the rig and the outside diameter cleaned. Care must be taken not to disturb the inside diameter fouling. The difference between the heat transfer coefficient as found and the heat transfer coefficient of the tube when tested after outside diameter cleaning only is the amount of heat transfer resistance attributable to outside diameter fouling. The third heat transfer coefficient is determined after the tube has been removed from the rig and had the inside diameter cleaned. This clean-tube heat transfer coefficient should be comparable to the ASME value calculated using the sum of resistances method for new tubes. In performing this series of tests repeatability of the rig is crucial. Current rigs are demonstrating repeatability in the range of ±3%.

Copyright ASME International
Provided by IHS under license with ASME
No reproduction or networking permitted without license from IHS
Not for Resale

NONMANDATORY APPENDIX J — PHYSICAL PROPERTIES OF SEAWATER

(This Appendix is not a part of PTC 12.2 and is included for information purposes only.)

Copyright ASME International
Provided by IHS under license with ASME
No reproduction or networking permitted without license from IHS
Not for Resale

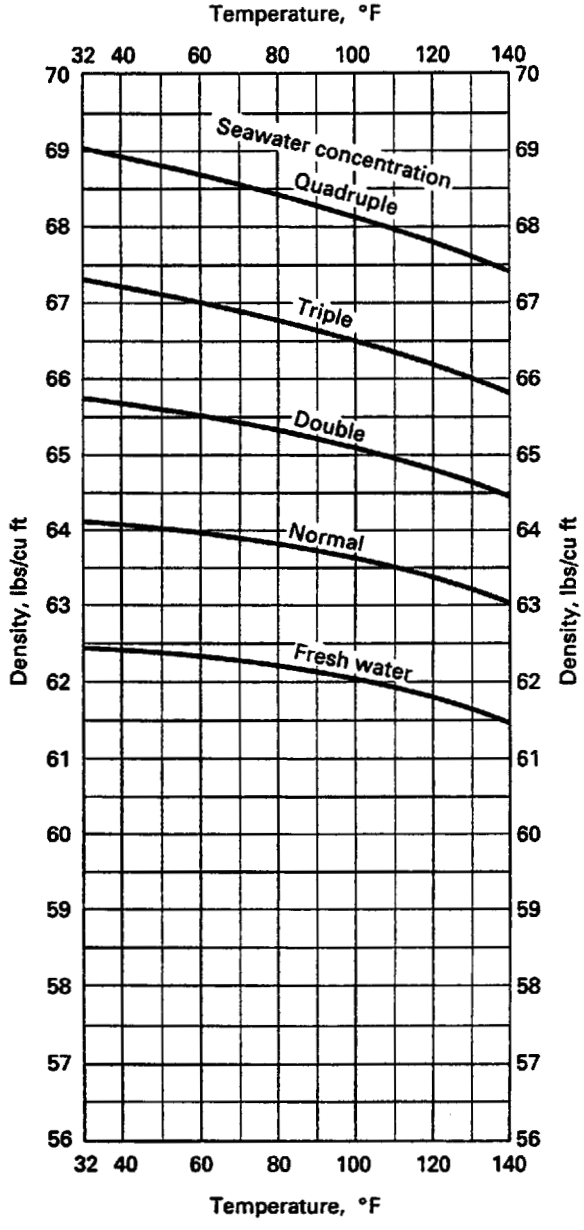

GENERAL NOTE:
The normal seawater concentration used in this chart has 34.483 g of solids per 1000 g seawater.

FIG. J.1 SEAWATER DENSITY

Copyright ASME International
Provided by IHS under license with ASME
No reproduction or networking permitted without license from IHS
Not for Resale

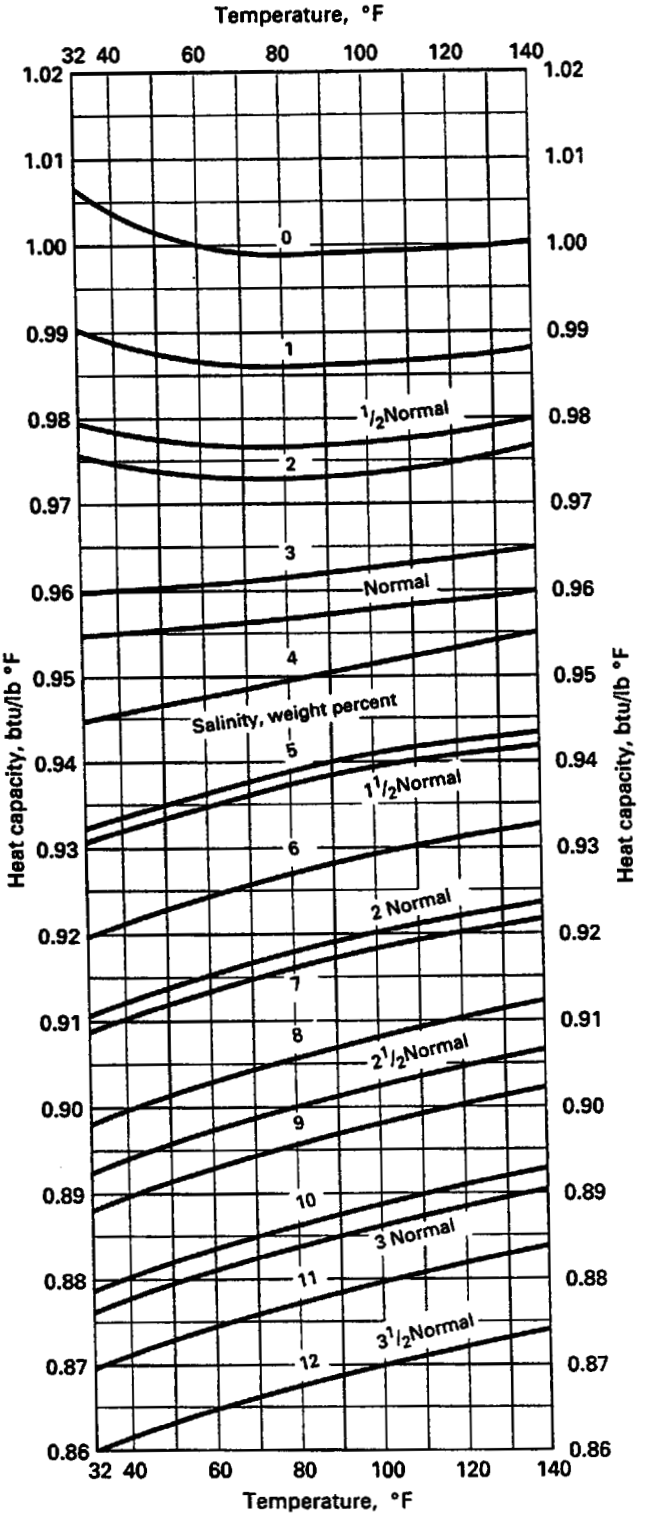

FIG. J.2 SEAWATER HEAT CAPACITY

Copyright ASME International
Provided by IHS under license with ASME
No reproduction or networking permitted without license from IHS
Not for Resale

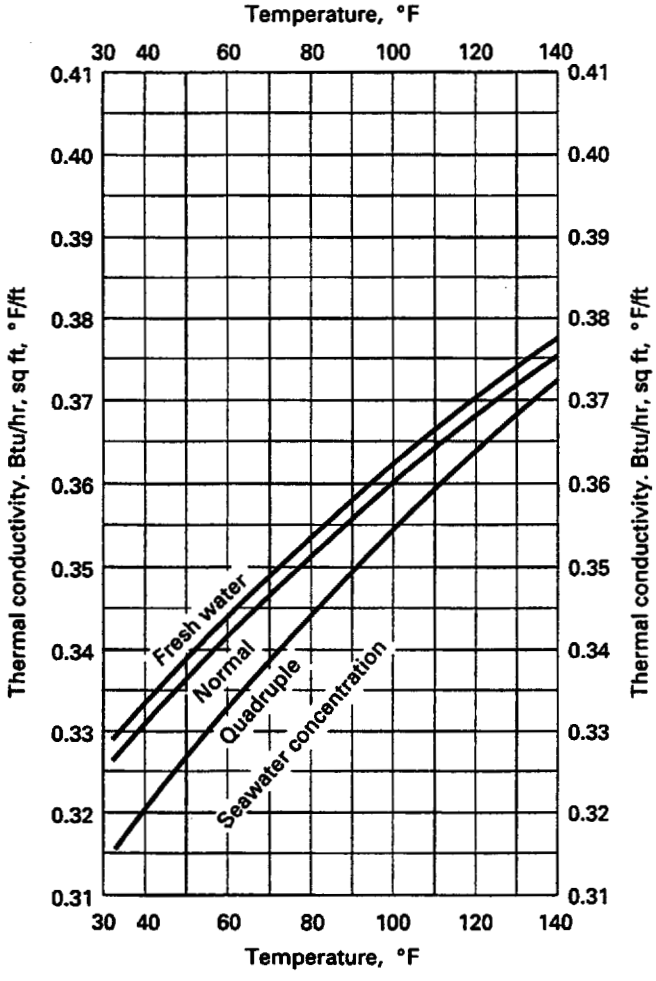

GENERAL NOTE:
The normal seawater concentration used in this chart has 34.483 g of solids per 1000 g seawater.

FIG. J.3 SEAWATER THERMAL CONDUCTIVITY

Copyright ASME International
Provided by IHS under license with ASME
No reproduction or networking permitted without license from IHS
Not for Resale

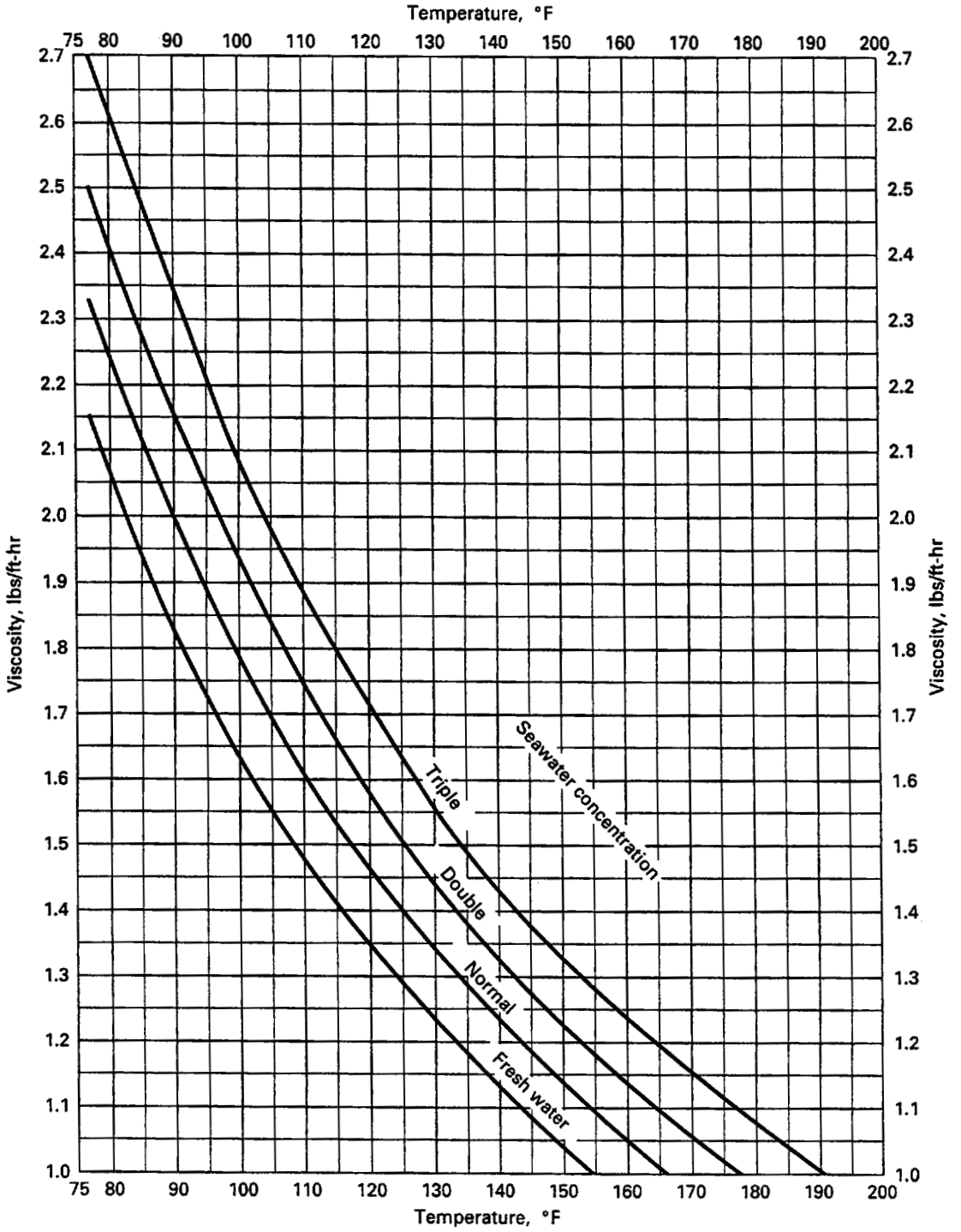

FIG. J.4 SEAWATER VISCOSITY

Copyright ASME International
Provided by IHS under license with ASME
No reproduction or networking permitted without license from IHS
Not for Resale

NONMANDATORY APPENDIX K — REFERENCES

[1] Rabas, T.J., Oane, D., "An Update of Intube Forced Convection Heat Transfer Coefficient with Variable Physical Properties," Advances in Heat Transfer, Vol. 6, pp. 503–564, 1970.

[2] Meyer, C.A. et al, *ASME Steam Tables. Third Edition,* The American Society of Mechanical Engineers, New York, NY, 1993.

[3] Taborek, J., *Design Methods For Heat Transfer Equipment, in Heat Exchangers: Design and Theory Sourcebook,* ed. by Afgan, N. and Schlunder, E., Hemisphere Publishing Company, 1974.

[4] Performance Test Codes, The American Society of Mechanical Engineers, New York, NY:

PTC 2, *Definitions and Values* [1980]
PTC 6, *Steam Turbines* [1996]
PTC 9, *Displacement Compressors, Vacuum Pumps, and Blowers* [1970]
PTC 12.3, *Deaerators* [1997]
PTC 18, *Hydraulic Turbines* [1992]
PTC 19.1, *Measurement Uncertainty* [1985]
PTC 19.2, *Instruments and Apparatus: Pressure Measurement* [1987]
PTC 19.3, *Instruments and Apparatus: Temperature Measurement* [1974]
PTC 19.5, *Instruments and Apparatus: Part II of Fluid Meters* [1972]
PTC 19.22, *Digital Systems Techniques* [1986]
PTC 24, *Ejectors* [1976]

[5] Heat Exchange Institute Standards for Steam Surface Condensers, 9th Edition, 1995.

[6] Standard Methods for the Examination of Water and Wastewater, 17th Edition, 1985.

[7] H.S. Bean (editor), *Fluid Meters: Their Theory and Application,* sixth edition, The American Society of Mechanical Engineers, New York, NY 1971.

[8] *Flow Measurements in Sanitary Sewers by Dye Dilution, Monograph,* SS 7-80, Turner Designs, Sunnyvale, CA, 1980.

[9] Smart, P.L., and I.M.S. Laidlaw, *An Evaluation of Fluorescent Dyes for Water Tracing,* Water Resources Research, Vol. 13, No. 1, February 1977.

[10] *Test Methods for Dissolved Oxygen in Water,* ASTM Standard D888-87.

[11] MFC-3M-1989, *Measurement of Fluid Flow in Pipes Using Orifice, Nozzle and Venturi,* The American Society of Mechanical Engineers, New York, NY, 1990.

Copyright ASME International
Provided by IHS under license with ASME
No reproduction or networking permitted without license from IHS
Not for Resale