ASME-PTC10

ADOPTION NOTICE

ASME-PTC10, "Compressors and Exhausters," was adopted on October 3, 1994 for use by the Department of Defense (DoD). Proposed changes by DoD activities must be submitted to the DoD Adopting Activity: Director, US Army Mobility Technology Center/Belvoir, ATTN: AMSTA-RBES, Fort Belvoir, VA 22060-5606. DoD activities may obtain copies of this standard from the Standardization Document Order Desk, 700 Robbins Avenue, Building 4D, Philadelphia, PA 19111-5094. The private sector and other Government agencies may purchase copies from the American Society of Mechanical Engineers, 345 East 47th Street, New York, NY 10017.

Custodians:
Army - ME
Navy - YD-1
Air Force - 99

Adopting Activity
Army - ME

FSC 4310

DISTRIBUTION STATEMENT A. Approved for public release; distribution is unlimited.

Copyright ASME International
Provided by IHS under license with ASME
No reproduction or networking permitted without license from IHS
Not for Resale

STD·ASME PTC 10-ENGL 1997 ■ 0759670 0605421 385 ■

AN AMERICAN NATIONAL STANDARD

ASME
PTC 10-1997

Performance Test Code on Compressors and Exhausters

PERFORMANCE
TEST
CODES



The American Society of
Mechanical Engineers

Copyright ASME International
Provided by IHS under license with ASME
No reproduction or networking permitted without license from IHS

Not for Resale

STD.ASME PTC 10-ENGL 1997 ■ 0759670 0605422 211 ■

AN AMERICAN NATIONAL STANDARD

ASME
PTC 10-1997

Performance Test Code on Compressors and Exhausters



The American Society of Mechanical Engineers

PERFORMANCE TEST CODES

Copyright ASME International
Provided by IHS under license with ASME
No reproduction or networking permitted without license from IHS

Not for Resale

Date of Issuance: September 30, 1998

This document will be revised when the Society approves the issuance of a new edition. There will be no addenda issued to ASME PTC 10-1997.

Please Note: ASME issues written replies to inquiries concerning interpretation of technical aspects of this document. The interpretations are not part of the document. PTC 10-1997 is being issued with an automatic subscription service to the interpretations that will be issued to it up to the publication of the next edition.

ASME is the registered trademark of The American Society of Mechanical Engineers.

This code or standard was developed under procedures accredited as meeting the criteria for American National Standards. The Standards Committee that approved the code or standard was balanced to assure that individuals from competent and concerned interests have had an opportunity to participate. The proposed code or standard was made available for public review and comment which provides an opportunity for additional public input from industry, academia, regulatory agencies, and the public-at-large.

ASME does not "approve," "rate," or "endorse" any item, construction, proprietary device, or activity.

ASME does not take any position with respect to the validity of any patent rights asserted in connection with any items mentioned in this document, and does not undertake to insure anyone utilizing a standard against liability for infringement of any applicable Letters Patent, nor assume any such liability. Users of a code or standard are expressly advised that determination of the validity of any such patent rights, and the risk of infringement of such rights, is entirely their own responsibility.

Participation by federal agency representative(s) or person(s) affiliated with industry is not to be interpreted as government or industry endorsement of this code or standard.

ASME accepts responsibility for only those interpretations issued in accordance with governing ASME procedures and policies which preclude the issuance of interpretations by individual volunteers.

No part of this document may be reproduced in any form,
in an electronic retrieval system or otherwise,
without the prior written permission of the publisher.

The American Society of Mechanical Engineers
Three Park Avenue, New York, NY 10016-5990

Copyright © 1998 by
THE AMERICAN SOCIETY OF MECHANICAL ENGINEERS
All Rights Reserved
Printed in U.S.A.

Copyright ASME International
Provided by IHS under license with ASME
No reproduction or networking permitted without license from IHS

Not for Resale

FOREWORD

(This Foreword is not a part of ASME PTC 10-1997.)

PTC 10 was last revised in 1965 and it has been reaffirmed many times in the intervening period. The PTC 10 Committee has been in various states of activity for approximately the past 20 years. During that time the Code has been completely rewritten to be far more explanatory in nature.

The performance testing of compressors is complicated by the need in virtually every case to consider and make correction for the differences between the test and specified conditions. The techniques used to do so are based upon the rules of fluid-dynamic similarity. Some familiarity with this fundamental technique will be a significant aid to the users of PTC 10.

Compressors and exhausters come in all sorts of configurations. A very simple case is a single section compressor with one impeller, and single inlet and outlet flanges. Many more complex arrangements exist with multiple inlets, outlets, impellers, sections, intercoolers and side seams. Typical gases handled are air, its constituents, and various hydrocarbons. Tests are commonly run in the shop or in the field, at speeds equal to or different from the specified speed, and with the specified or a substitute gas. In order to handle this vast array of possibilities PTC 10 reduces the problem to the simplest element, the section, and provides the instructions for combining multiple sections to compute the overall results.

Uncertainty analysis can play a very important role in compressor testing, from the design of the test to interpretation of the test results. In all but the very simplest of cases the development of an analytic formulation, i.e., in simple equation form, for overall uncertainty computation is formidable. The test uncertainty will always be increasingly more complex to evaluate with the complexity of the compressor configuration, and by the very nature of the test will be a function of the performance curves.

The modern personal computer is readily capable of completing the calculations required. The Committee developed software and used it to perform both the basic code calculations and uncertainty analysis computations for a wide range of possible compressor configurations.

This Code was approved by the PTC 10 Committee on January 18, 1991. It was approved and adopted by the Council as a standard practice of the Society by action of the Board on Performance Test Codes on October 14, 1996. It was also approved as an American National Standard by the ANSI Board of Standards Review on April 22, 1997.

Copyright ASME International
Provided by IHS under license with ASME
No reproduction or networking permitted without license from IHS
Not for Resale

NOTICE

All Performance Test Codes MUST adhere to the requirements of PTC 1, GENERAL INSTRUCTIONS. The following information is based on that document and is included here for emphasis and for the convenience of the user of this Code. It is expected that the Code user is fully cognizant of Parts I and III of PTC 1 and has read them prior to applying this Code.

ASME Performance Test Codes provide test procedures which yield results of the highest level of accuracy consistent with the best engineering knowledge and practice currently available. They were developed by balanced committees representing all concerned interests. They specify procedures, instrumentation, equipment operating requirements, calculation methods, and uncertainty analysis.

When tests are run in accordance with this Code, the test results themselves, without adjustment for uncertainty, yield the best available indication of the actual performance of the tested equipment. ASME Performance Test Codes do **not** specify means to compare those results to contractual guarantees. Therefore, it is recommended that the parties to a commercial test agree **before starting the test and preferably before signing the contract** on the method to be used for comparing the test results to the contractual guarantees. It is beyond the scope of any code to determine or interpret how such comparisons shall be made.

Approved by Letter Ballot #95-1 and BPTC Administrative Meeting of March 13–14, 1995

Copyright ASME International
Provided by IHS under license with ASME
No reproduction or networking permitted without license from IHS
Not for Resale

PERSONNEL OF PERFORMANCE TEST CODE COMMITTEE NO. 10 ON COMPRESSORS AND EXHAUSTERS

(The following is the roster of the Committee at the time of approval of this Code.)

OFFICERS

Gordon J. Gerber, *Chair*
Richard J. Gross, *Vice Chair*
Jack H. Karian, *Secretary*

COMMITTEE PERSONNEL

Helmut B. Baranek, Public Service Electric & Gas Company
John J. Dwyer, Consultant
Gordon J. Gerber, Praxair
Richard J. Gross, The University of Akron
Jack H. Karian, ASME
Robert E. Lawrence, Consultant
Jack A. Lock, Lock Engineering
Vincent J. Polignano, IMO Delaval
Frank H. Rassmann, Elliott Company
Norman A. Samurin, Dresser Rand Company
Joseph A. Silvaggio, Jr., *Alternate* to Polignano, IMO Delaval

Copyright ASME International
Provided by IHS under license with ASME
No reproduction or networking permitted without license from IHS
Not for Resale

BOARD ON PERFORMANCE TEST CODES

OFFICERS

D. R. Keyser, *Chair*
P. M. Gerhart, *Vice Chair*
W. O. Hays, *Secretary*

COMMITTEE PERSONNEL

R. P. Allen
R. L. Bannister
B. Bornstein
J. M. Burns
J. R. Friedman
G. J. Gerber
P. M. Gerhart
R. S. Hecklinger
R. W. Henry
D. R. Keyser
S. J. Korellis
J. W. Milton
G. H. Mittendorf, Jr.
S. P. Nuspl
R. P. Perkins
A. L. Plumley
S. B. Scharp
J. Siegmund
J. A. Silvaggio, Jr.
R. E. Sommerlad
W. G. Steele, Jr.
J. C. Westcott
J. G. Yost

Copyright ASME International
Provided by IHS under license with ASME
No reproduction or networking permitted without license from IHS
Not for Resale

CONTENTS

Foreword iii
Committee Roster v
Board Roster vi

Section

1 Object and Scope 1
2 Definitions and Description of Terms 3
3 Guiding Principles 11
4 Instruments and Methods of Measurement 23
5 Computation of Results 39
6 Report of Test 55

Figures

3.1 Section Control Volumes 14
3.2 Typical Sideload Sectional Compressors 16
3.3 Allowable Machine Mach Number Departures, Centrifugal Compressors 18
3.4 Allowable Machine Mach Number Departures, Axial Compressors 19
3.5 Allowable Machine Reynolds Number Departures, Centrifugal Compressors 20
3.6 Schultz Compressibility Factor — Function *Y* versus Reduced Pressure 21
3.7 Schultz Compressibility Factor — Function *X* versus Reduced Pressure 22
4.1 Inlet and Discharge Configuration 24
4.2 Open Inlet 24
4.3 Vortex Producing Axial Inlet 25
4.4 Open Discharge 25
4.5 Diffusing Volute Discharge With Nonsymmetric Flow 26
4.6 Typical Closed Loop 26
4.7 Typical Closed Loop With Sidestream 27
4.8 Straighteners and Equalizers 29
4.9 Inlet Nozzle on an Open Loop 32
4.10 Discharge Nozzle on an Open Loop, Subcritical Flow 33
4.11 Discharge Nozzle on an Open Loop, Critical Flow 33
4.12 Typical Sidestream Inlet Area 35
5.1 Specified Condition Capacity Coefficient for Specified Condition Capacity of Interest 49

Tables

3.1 Permissible Deviation From Specified Operating Conditions for Type 1 Tests 12

Copyright ASME International
Provided by IHS under license with ASME
No reproduction or networking permitted without license from IHS
Not for Resale

3.2	Permissible Deviation From Specified Operating Parameters for Type 1 and 2 Tests	12
3.3	Limits of Departure From Ideal Gas Laws of Specified and Test Gases	13
3.4	Permissible Fluctuations of Test Readings	14
5.1	Ideal Gas Dimensionless Parameters	40
5.2	Real Gas Dimensionless Parameters	41
5.3	Total Work Input Coefficient, All Gases	48
5.4	Typical Conversion of Dimensionless Parameters	50

Nonmandatory Appendices

A	Use of Total Pressure and Total Temperature to Define Compressor Performance	59
B	Properties of Gas Mixtures	61
C	Sample Calculations	63
C.1	Type 1 Test for a Centrifugal Compressor Using an Ideal Gas	65
C.2	Type 2 Test for a Centrifugal Compressor Using an Ideal Gas	85
C.3	Ideal Gas Application to Selection of Test Speed and Test Gas and Methods of Power Evaluation	109
C.4	Treatment of Bracketed Test Points	119
C.5	Selection of a Test Gas for a Type 2 Test Using Ideal and Real Gas Equations	123
C.6	Type 2 Test Using Real Gas Equations for Data Reduction	139
C.7	Treatment of a Two Section Compressor With Externally Piped Intercoolers, Condensate Removal	151
C.8	Application of Uncertainty Analysis	159
D	References	165
E	Rationale for Calculation Methods	167
F	Reynolds Number Correction	183
G	Refined Methods for Calculating Total Conditions	185
H	SI Units	187

Copyright ASME International
Provided by IHS under license with ASME
No reproduction or networking permitted without license from IHS
Not for Resale

STD·ASME PTC 10-ENGL 1997 ■ 0759670 0605430 398 ■

SECTION 1 — OBJECT AND SCOPE

1.1 OBJECT

The object of this Code is to provide a test procedure to determine the thermodynamic performance of an axial or centrifugal compressor or exhauster doing work on a gas of known or measurable properties under specified conditions.

This Code is written to provide explicit test procedures which will yield the highest level of accuracy consistent with the best engineering knowledge and practice currently available. Nonetheless, no single universal value of the uncertainty is, or should be, expected to apply to every test. The uncertainty associated with any individual PTC 10 test will depend upon practical choices made in terms of instrumentation and methodology. Rules are provided to estimate the uncertainty for individual tests.

1.2 SCOPE

1.2.1 General. The scope of this Code includes instructions on test arrangement and instrumentation, test procedure, and methods for evaluation and reporting of final results.

Rules are provided for establishing the following quantities, corrected as necessary to represent expected performance under specified operating conditions with the specified gas:

(a) quantity of gas delivered
(b) pressure rise produced
(c) head
(d) shaft power required
(e) efficiency
(f) surge point
(g) choke point

Other than providing methods for calculating mechanical power losses, this Code does not cover rotor dynamics or other mechanical performance parameters.

1.2.2 Compressor Arrangements. This Code is designed to allow the testing of single or multiple casing axial or centrifugal compressors or combinations thereof, with one or more stages of compression per casing. Procedures are also included for externally piped intercoolers and for compressors with interstage side load inlets or outlets.

Internally cooled compressors are included provided that test conditions are held nearly identical to specified conditions.

Compressors, as the name implies, are usually intended to produce considerable density change as a result of the compression process. Fans are normally considered to be air or gas moving devices and are characterized by minimal density change. A distinction between the two at times may be unclear. As a very rough guide, either PTC 10 or PTC 11 may be used for machines falling into the approximate pressure ratio range of 1.05 to 1.2.

The methods of PTC 10, which provide for the pronounced effects of density change during compression, have no theoretical lower limit. However, practical considerations regarding achievable accuracy become important in attempting to apply PTC 10 to devices commonly classified as fans. For example, the low temperature rise associated with fans may lead to large uncertainty in power requirement if the heat balance method is chosen. Fans also may require traversing techniques for flow and gas state measurements due to the inlet and discharge ducting systems employed. Refer to PTC 11 on Fans for further information.

1.3 EQUIPMENT NOT COVERED BY THIS CODE

The calculation procedures provided in this Code are based on the compression of a single phase gas. They should not be used for a gas containing suspended solids or any liquid, when liquid could be formed in the compression process, or when a chemical reaction takes place in the compression process.

This does not preclude the use of this Code on a gas where condensation occurs in a cooler providing the droplets are removed prior to the gas entering the next stage of compression.

Copyright ASME International
Provided by IHS under license with ASME
No reproduction or networking permitted without license from IHS
Not for Resale

1.4 TYPES OF TESTS

This Code contains provisions for two different types of tests. A Type 1 test must be conducted on the specified gas with a limited deviation between test and specified operating conditions. A Type 2 test permits the use of a substitute test gas and extends the permissible deviations between test and specified operating conditions.

1.5 PERFORMANCE RELATION TO GUARANTEE

This Code provides a means for determining the performance of a compressor at specified operating conditions. It also provides a method for estimating the uncertainty of the results. The interpretation of the results relative to any contractual guarantees is beyond the scope of this Code and should be agreed upon in writing prior to the test by the participating parties.

1.6 ALTERNATE PROCEDURES

Definitive procedures for testing compressors are described herein. If any other procedure or test configuration is used, this shall be agreed upon in writing prior to the test by the participating parties. However, no deviations may be made that will violate any mandatory requirements of this Code when the tests are designated as tests conducted in accordance with ASME PTC 10.

The mandatory rules of this Code are characterized by the use of the word "shall." If a statement is of an advisory nature it is indicated by the use of the word "should" or is stated as a recommendation.

1.7 INSTRUCTIONS

The Code on General Instructions, PTC 1, shall be studied and followed where applicable. The instructions in PTC 10 shall prevail over other ASME Performance Test Codes where there is any conflict.

1.8 REFERENCES

Unless otherwise specified, references to other Codes refer to ASME Performance Test Codes. Literature references are shown in Appendix D.

Copyright ASME International
Provided by IHS under license with ASME
No reproduction or networking permitted without license from IHS Not for Resale

SECTION 2 — DEFINITIONS AND DESCRIPTION OF TERMS

2.1 BASIC SYMBOLS AND UNITS

Symbol	Description	Units
A	Flow channel cross sectional area	ft^2
a	Acoustic velocity	ft/sec
b	Tip width	ft
C	Coefficient of discharge	dimensionless
C	Molal specific heat (Appendix B only)	Btu/lbm · mole °R
c	Specific heat	Btu/lbm °R
c_p	Specific heat at constant pressure	Btu/lbm °R
c_v	Specific heat at constant volume	Btu/lbm °R
D	Diameter	in.
d	Diameter of fluid meter	in.
e	Relative error	dimensionless
f	Polytropic work factor	dimensionless
g_c	Dimensional constant, 32.174	lbm ft/lbf · sec^2
H	Molal enthalpy	Btu/lbm-mole
HR	Humidity ratio	lbm H_2O/lbm dry air
h	Enthalpy	Btu/lbm
h_r	Coefficient of heat transfer for casing and adjoining pipe	Btu/hr · ft^2 · °R
J	Mechanical equivalent of heat, 778.17	ft lbf/Btu
K	Flow coefficient	dimensionless
k	Ratio of specific heats, c_p/c_v	dimensionless
log	Common logarithm (Base 10)	dimensionless
ln	Naperian (natural) logarithm	dimensionless
MW	Molecular weight	lbm/lbmole
Mm	Machine Mach number	dimensionless
M	Fluid Mach number	dimensionless
m	Polytropic exponent for a path on the p-T diagram	dimensionless
m	Mass (Appendix B only)	lbm
N	Rotative speed	rpm
n	Polytropic exponent for a path on the p-v diagram	dimensionless
n	Number of moles (Appendix B only)	lb · mole
n_s	Isentropic exponent for a path on the p-v diagram	dimensionless
P	Power	hp
p	Pressure	psia
p_v	Velocity pressure	psi
Q_{ext}	Other external heat losses	Btu/min
Q_m	Total mechanical losses (equivalent)	Btu/min

Copyright ASME International
Provided by IHS under license with ASME
No reproduction or networking permitted without license from IHS Not for Resale

Q_r	Heat transfer from the section boundaries	Btu/min
Q_{sl}	External seal loss equivalent	Btu/min
q	Rate of flow	ft^3/min
R	Gas constant	ft · lbf/lbm · °R
RA, RB, RC	Machine Reynolds number correction constants	dimensionless
Re	Fluid Reynolds number	dimensionless
Rem	Machine Reynolds number	dimensionless
RH	Relative humidity	percentage
R_p	Reduced pressure	dimensionless
R_t	Reduced temperature	dimensionless
r	Pressure ratio across fluid meter	dimensionless
r_f	Recovery factor	dimensionless
r_p	Pressure ratio	dimensionless
r_q	Flow rate ratio	dimensionless
r_t	Temperature ratio	dimensionless
r_v	Ratio of specific volumes	dimensionless
S	Molar entropy	Btu/lbm · mole · °R
S_c	Heat transfer surface area of exposed compressor casing and adjoining pipe	ft^2
s	Entropy	Btu/lbm · °R
T	Absolute temperature	°R
t	Temperature	°F
u	Internal energy	Btu/lbm
U	Blade tip speed	ft/sec
V	Velocity	ft/sec
v	Specific volume	ft^3/lbm
W	Work per unit mass	ft · lbf/lbm
w	Mass rate of flow	lbm/min
X	Compressibility function	dimensionless
x	Mole fraction	dimensionless
Y	Compressibility function	dimensionless
y	Elevation head or potential energy	ft · lbf/lbm
Z	Compressibility factor as used in gas law, $144\ pv = ZRT$	dimensionless
β	Diameter ratio of fluid meter, d/D_1	dimensionless
γ	Isentropic exponent	dimensionless
∂	Partial derivative	dimensionless
η	Efficiency	dimensionless
μ	Absolute viscosity	lbm/ft sec
μ_{in}	Work input coefficient	dimensionless
μ_p	Polytropic work coefficient	dimensionless
μ_s	Isentropic work coefficient	dimensionless
ν	Kinematic viscosity	ft^2/sec
ρ	Density	lbm/ft^3
Σ	Summation	dimensionless
τ	Torque	lbf-ft
ϵ	Surface roughness	in.
Ω	Total work input coefficient	dimensionless
ϕ	Flow coefficient	dimensionless

Copyright ASME International
Provided by IHS under license with ASME
No reproduction or networking permitted without license from IHS Not for Resale

Subscripts

a	Ambient
a,b,c,j	Component of gas mixture (Appendix B only)
av	Average
c	Casing
corr	Correction
crit.	Fluid's critical point value
d	Compressor discharge conditions
da	Dry air
db	Dry-bulb
des	Design
dg	Dry gas
g	Gas
hb	Heat balance
i	Compressor inlet conditions
lu	Leakage upstream
ld	Leakage downstream
m	Gas mixture
p	Polytropic
rotor	Flow location reference
s	Isentropic
sh	Shaft
sp	Specified conditions
su	sidestream upstream
sd	sidestream downstream
sv	Saturated vapor
t	Test conditions
wb	Wet-bulb
1, 1n	Upstream of fluid meter
2, 2n	Downstream or at throat of fluid meter
α	Compressor inlet conditions (static, Appendix A only)
γ	Compressor discharge conditions (static, Appendix A only)
static	Static
meas.	Measured

Superscripts

( )′	Condition at discharge pressure with entropy equal to inlet entropy
( )	Determined at static conditions

2.2 PRESSURES

2.2.1 Absolute Pressure. The absolute pressure is the pressure measured above a perfect vacuum.

2.2.2 Gage Pressure. The gage pressure is that pressure which is measured directly with the existing barometric pressure as the zero base reference.

2.2.3 Differential Pressure. The differential pressure is the difference between any two pressures measured with respect to a common reference (e.g., the difference between two absolute pressures).

2.2.4 Static Pressure. The static pressure is the pressure measured in such a manner that no effect is produced by the velocity of the flowing fluid.

2.2.5 Total (Stagnation) Pressure. The total (stagnation) pressure is an absolute or gage pressure that would exist when a moving fluid is brought to rest and its kinetic energy is converted to an enthalpy rise by an isentropic process from the flow condition to the stagnation condition. In a stationary body of fluid the static and total pressures are equal.

2.2.6 Velocity (Kinetic) Pressure. The velocity (kinetic) pressure is the difference between the total pressure and the static pressure at the same point in a fluid.

2.2.7 Inlet Total Pressure. The inlet total pressure is the absolute total pressure that exists at the inlet measuring station (see para. 4.6.8). Unless specifically stated otherwise, this is the compressor inlet pressure as used in this Code.

2.2.8 Inlet Static Pressure. The inlet static pressure is the absolute static pressure that exists at the inlet measuring station (see para. 4.6.7).

2.2.9 Discharge Total Pressure. The discharge total pressure is the absolute total pressure that exists at the discharge measuring station (see para. 4.6.9). Unless specifically stated otherwise, this is the compressor discharge pressure as used in this Code.

2.2.10 Discharge Static Pressure. The discharge static pressure is the absolute static pressure that exists at the discharge measuring station (see para. 4.6.7).

2.3 TEMPERATURES

2.3.1 Absolute Temperature. The absolute temperature is the temperature measured above absolute zero. It is stated in degrees Rankine or Kelvin. The Rankine temperature is the Fahrenheit temperature plus 459.67 and the Kelvin temperature is the Celsius temperature plus 273.15.

Copyright ASME International
Provided by IHS under license with ASME
No reproduction or networking permitted without license from IHS
Not for Resale

2.3.2 Static Temperature. The static temperature is the temperature determined in such a way that no effect is produced by the velocity of the flowing fluid.

2.3.3 Total (Stagnation) Temperature. The total (stagnation) temperature is the temperature that would exist when a moving fluid is brought to rest and its kinetic energy is converted to an enthalpy rise by an isentropic process from the flow condition to the stagnation condition. In a stationary body of fluid the static and the total temperatures are equal.

2.3.4 Velocity (Kinetic) Temperature. The velocity (kinetic) temperature is the difference between the total temperature and the static temperature at the measuring station.

2.3.5 Inlet Total Temperature. The inlet total temperature is the absolute total temperature that exists at the inlet measuring station (see para. 4.7.7). Unless specifically stated otherwise, this is the compressor inlet temperature used in this Code.

2.3.6 Inlet Static Temperature. The inlet static temperature is the absolute static temperature that exists at the inlet measuring station.

2.3.7 Discharge Total Temperature. The discharge total temperature is the absolute total temperature that exists at the discharge measuring station (see para. 4.7.8). Unless specifically stated otherwise, this is the compressor discharge temperature as used in this Code.

2.3.8 Discharge Static Temperature. The discharge static temperature is the absolute static temperature that exists at the discharge measuring station.

2.4 OTHER GAS (FLUID) PROPERTIES

2.4.1 Density. Density is the mass of the gas per unit volume. It is a thermodynamic property and is determined at a point once the total pressure and temperature are known at the point.

2.4.2 Specific Volume. Specific volume is the volume occupied by a unit mass of gas. It is a thermodynamic property and is determined at a point once the total pressure and temperature are known at the point.

2.4.3 Molecular Weight. Molecular weight is the weight of a molecule of a substance referred to that of an atom of carbon-12 at 12.000.

2.4.4 Absolute Viscosity. Absolute viscosity is that property of any fluid which tends to resist a shearing force.

2.4.5 Kinematic Viscosity. The kinematic viscosity of a fluid is the absolute viscosity divided by the fluid density.

2.4.6 Specific Heat at Constant Pressure. The specific heat at constant pressure, $(c_p) = (\partial h/\partial T)_p$ is the change in enthalpy with respect to temperature at a constant pressure.

2.4.7 Specific Heat at Constant Volume. The specific heat at constant volume, $(c_v) = (\partial u/\partial T)_v$ is the change in internal energy with respect to temperature at a constant specific volume.

2.4.8 Ratio of Specific Heats. The ratio of specific heats, k, is equal to c_p/c_v.

2.4.9 Acoustic Velocity (Sonic Velocity). A pressure wave or acoustic wave of infinitesimal amplitude is described by an adiabatic and reversible (isentropic) process. The corresponding acoustic velocity for such waves in any medium is given by:

$$a^2 = \left(\frac{\partial p}{\partial \rho}\right)_s$$

2.4.10 Fluid Mach Number. The Fluid Mach number is the ratio of fluid velocity to acoustic velocity.

2.5 MACHINE CHARACTERISTICS

2.5.1 Capacity. The capacity of a compressor is the rate of flow which is determined by delivered mass flow rate divided by inlet total density. For an exhauster it is determined by the inlet mass flow rate divided by inlet total density. For sidestream machines, this definition must be applied to individual sections.

2.5.2 Flow Coefficient. The flow coefficient is a dimensionless parameter defined as the compressed mass flow rate divided by the product of inlet density, rotational speed, and the cube of the blade tip diameter. Compressed mass flow rate is the net mass flow rate through the rotor.

2.5.3 Pressure Ratio. Pressure ratio is the ratio of the absolute discharge total pressure to the absolute inlet total pressure.

Copyright ASME International
Provided by IHS under license with ASME
No reproduction or networking permitted without license from IHS
Not for Resale

2.5.4 Pressure Rise. Pressure rise is the difference between the discharge total pressure and the inlet total pressure.

2.5.5 Temperature Rise. Temperature rise is the difference between the discharge total temperature and the inlet total temperature.

2.5.6 Volume Flow Rate. The volume flow rate as used in this Code is the local mass flow rate divided by local total density. It is used to determine volume flow ratio.

2.5.7 Volume Flow Ratio. The volume flow ratio is the ratio of volume flow rates at two points in the flow path.

2.5.8 Specific Volume Ratio. The specific volume ratio is the ratio of inlet specific volume to discharge specific volume.

2.5.9 Machine Reynolds Number. The Machine Reynolds number is defined by the equation Rem = Ub/ν, where U is the velocity at the outer blade tip diameter of the first impeller or of the first stage rotor tip diameter of the leading edge, ν is the total kinematic viscosity of the gas at the compressor inlet, and b is a characteristic length. For centrifugal compressors, b shall be taken as the exit width at the outer blade diameter of the first stage impeller. For axial compressors, b shall be taken as the chord length at the tip of the first stage rotor blade. These variables must be expressed in consistent units to yield a dimensionless ratio.

2.5.10 Machine Mach Number. The Machine Mach number is defined as the ratio of the blade velocity at the largest blade tip diameter of the first impeller for centrifugal machines or at the tip diameter of the leading edge of the first stage rotor blade for axial flow machines to the acoustic velocity of the gas at the total inlet conditions.

NOTE: This is not to be confused with local Fluid Mach number.

2.5.11 Stage. A stage for a centrifugal compressor is comprised of a single impeller and its associated stationary flow passages. A stage for an axial compressor is comprised of a single row of rotating blades and its associated stationary blades and flow passages.

2.5.12 Section. Section is defined as one or more stages having the same mass flow without external heat transfer other than natural casing heat transfer.

2.5.13 Control Volume. The control volume is a region of space selected for analysis where the flow streams entering and leaving can be quantitatively defined as well as the power input and heat exchange by conduction and radiation. Such a region can be considered to be in equilibrium for both a mass and energy balance.

2.5.14 Compressor Surge Point. The compressor surge point is the capacity below which the compressor operation becomes unstable. This occurs when flow is reduced and the compressor back pressure exceeds the pressure developed by the compressor and a breakdown in flow results. This immediately causes a reversal in the flow direction and reduces the compressor back pressure. The moment this happens regular compression is resumed and the cycle is repeated.

2.5.15 Choke Point. The choke point is the point where the machine is run at a given speed and the flow is increased until maximum capacity is attained.

2.6 WORK, POWER, AND EFFICIENCY

These definitions apply to a section.

2.6.1 Isentropic Compression. Isentropic compression as used in this Code refers to a reversible, adiabatic compression process.

2.6.2 Isentropic Work (Head). Isentropic work (head) is the work required to isentropically compress a unit mass of gas from the inlet total pressure and total temperature to the discharge total pressure. The total pressure and temperature are used to account for the compression of the gas and the change in the kinetic energy of the gas. The change in the gravitational potential energy of the gas is assumed negligible.

2.6.3 Polytropic Compression. Polytropic compression is a reversible compression process between the inlet total pressure and temperature and the discharge total pressure and temperature. The total pressures and temperatures are used to account for the compression of the gas and the change in the kinetic energy of the gas. The change in the gravitational potential energy is assumed negligible. The polytropic process follows a path such that the polytropic exponent is constant during the process.

2.6.4 Polytropic Work (Head). Polytropic work (head) is the reversible work required to compress a unit mass of gas by a polytropic process from the inlet total pressure and temperature to the discharge total pressure and temperature.

Copyright ASME International
Provided by IHS under license with ASME
No reproduction or networking permitted without license from IHS
Not for Resale

2.6.5 Gas Work. Gas work is the enthalpy rise of a unit mass of the gas compressed and delivered by the compressor from the inlet total pressure and temperature to the discharge total pressure and temperature.

2.6.6 Gas Power. Gas power is the power transmitted to the gas. It is equal to the product of the mass flow rate compressed and the gas work plus the heat loss from the compressed gas.

2.6.7 Isentropic Efficiency. The isentropic efficiency is the ratio of the isentropic work to the gas work.

2.6.8 Polytropic Efficiency. The polytropic efficiency is the ratio of the polytropic work to the gas work.

2.6.9 Shaft Power (Brake Power). The shaft power (brake power) is the power delivered to the compressor shaft. It is the gas power plus the mechanical losses in the compressor.

2.6.10 Isentropic Work Coefficient. The isentropic work coefficient is the dimensionless ratio of the isentropic work to the sum of the squares of the blade tip speeds of all stages in a given section.

2.6.11 Polytropic Work Coefficient. The polytropic work coefficient is the dimensionless ratio of the polytropic work to the sum of the squares of the blade tip speeds of all stages in a given section.

2.6.12 Mechanical Losses. Mechanical losses are the total power consumed by frictional losses in integral gearing, bearings, and seals.

2.6.13 Work Input Coefficient. The work input coefficient is the dimensionless ratio of the enthalpy rise to the sum of the squares of the tip speeds of all stages in a given section.

2.6.14 Total Work Input Coefficient. The total work input coefficient is the dimensionless ratio of the total work input to the gas to the sum of the squares of the blade tip speeds of all stages in a given section.

2.7 MISCELLANEOUS

2.7.1 Fluid Reynolds Number. The Fluid Reynolds number is the Reynolds number for the gas flow in a pipe. It is defined by the equation $\mathrm{Re} = VD/\nu$, where the velocity, characteristic length, and static kinematic viscosity are to be used as follows: velocity V is the average velocity at the pressure measuring station, the characteristic length D is the inside pipe diameter at the pressure measuring station and the kinematic viscosity, ν is that which exists for the static temperature and pressure at the measuring station. The pressure and temperature measuring stations for flow metering calculations shall be specified as in Section 4 and the accompanying illustrations. The variables in the Reynolds number must be expressed in consistent units to yield a dimensionless ratio.

2.7.2 Dimensional Constant. The dimensional constant, g_c, is required to account for the units of length, time, and force. It is equal to 32.174 ft-lbm/lbf · sec^2. The numerical value is unaffected by the local gravitational acceleration.

2.7.3 Specified Operating Conditions. The specified operating conditions are those conditions for which the compressor performance is to be determined. Refer to paras. 6.2.3 and 6.2.4.

2.7.4 Test Operating Conditions. The test operating conditions are the operating conditions prevailing during the test. Refer to paras. 6.2.7 and 6.2.8.

2.7.5 Equivalence. The specified operating conditions and the test operating conditions, for the purpose of this Code, are said to demonstrate equivalence when, for the same flow coefficient the ratios of the three dimensionless parameters (specific volume ratio, Machine Mach number, and Machine Reynolds number) fall within the limits prescribed in Table 3.2.

2.7.6 Raw Data. Raw data is the recorded observation of an instrument taken during the test run.

2.7.7 Reading. A reading is the average of the corrected individual observations (raw data) at any given measurement station.

2.7.8 Test Point. The test point consists of three or more readings that have been averaged and fall within the permissible specified fluctuation.

2.7.9 Fluctuation. The fluctuation of a specific measurement is defined as the highest reading minus the lowest reading divided by the average of all readings expressed as a percent.

2.8 INTERPRETATION OF SUBSCRIPTS

2.8.1 Certain values for thermodynamic state and mass flow rate are used in the computation of the dimensionless performance parameters M, Re, r_v, ϕ, μ_p, μ_i, η_p and Ω. Unless otherwise specifically

Copyright ASME International
Provided by IHS under license with ASME
No reproduction or networking permitted without license from IHS
Not for Resale

stated, the thermodynamic total conditions are used. The subscripts used in these equations are interpreted as follows.

2.8.1.1 The subscript "*i*" on thermodynamic state variables denotes inlet conditions. For single entry streams it refers to conditions at the section inlet measurement station. For multiple inlet streams it refers to a calculated mixed state. See para. E.5 of Appendix E.

2.8.1.2 The subscript "*d*" on thermodynamic state variables denotes discharge conditions. It refers to conditions at the mainstream discharge measurement station.

2.8.1.3 The subscript "rotor" is used on mass flow rate to denote the net mass flow rate compressed by the rotor. Its determination requires that all measured flows and calculated leakages are considered.

Copyright ASME International
Provided by IHS under license with ASME
No reproduction or networking permitted without license from IHS
Not for Resale

SECTION 3 — GUIDING PRINCIPLES

3.1 PLANNING THE TEST

3.1.1 Before undertaking a test in accordance with the rules of this Code, the Code on General Instructions, PTC 1, shall be consulted. It explains the intended use of the Performance Test Codes and is particularly helpful in the initial planning of the test.

3.1.2 When a test is to be conducted in accordance with this Code, the scope and procedures to be used shall be determined in advance. Selections of pipe arrangements, test driver, instruments, and test gas, if applicable, shall be made. Estimates of the probable uncertainty in the planned measurements should be made.

3.1.3 The scope of the test shall be agreed to by the interested parties. This may be dictated in advance by contractual commitments or may be mutually agreed upon prior to the start of the test. This Code contains procedures for a single point performance test and gives guidance on determining a complete performance curve.

3.1.4 Specified conditions, that is, mass flow rate, inlet conditions of pressure, temperature, humidity, discharge pressure, cooling water temperature if applicable, speed, gas properties, and input power expected shall be defined.

3.1.5 A detailed written statement of the test objectives shall be developed prior to conducting the test.

3.1.6 A test facility shall be selected. Typically this is the manufacturer's test stand or the user's installation site.

3.1.7 The number of test personnel should be sufficient to assure a careful and orderly observation of all instruments with time between observations to check for indications of error in instruments or observations.

3.1.8 An individual shall be designated as responsible for conducting the test.

3.2 TYPES OF TESTS

This Code defines two types of test which are based on the deviations between test and specified operating conditions.

3.2.1 Type 1 tests are conducted with the specified gas at or very near the specified operating conditions. Deviations in the specified gas and operating conditions are subject to the limitations imposed by Table 3.1. These limitations are subject to the further restriction that their individual and combined effects shall not exceed the limits of Table 3.2.

3.2.2 Type 2 tests are conducted subject to the limits of Table 3.2 only. The specified gas or a substitute gas may be used. The test speed required is often different from the specified operating condition speed.

3.2.3 The selection of test type shall be made in advance of the test. In the interest of maximizing accuracy of test results it is desirable that test conditions duplicate specified operating conditions as closely as possible. The limits in Table 3.1 provide maximum allowable deviations of individual parameters for Type 1 tests. The limitations of Table 3.2 provide maximum allowable deviations of the fundamental dimensionless parameter groupings for both types. The emphasis in conducting either a Type 1 or Type 2 test should be toward minimizing these deviations. The most reliable test results would be expected when the deviations in both tables are minimized.

3.2.4 Calculation procedures are given in Section 5 for gases conforming to Ideal Gas Laws and for Real Gases. Where the compressibility values depart from the limits prescribed in Table 3.3 the alternate calculation procedures provided for Real Gases shall be used. These alternate procedures apply to calculations for either Type 1 or Type 2 tests.

3.3 LIMITATIONS

3.3.1 Compressors constructed with liquid cooled diaphragms, or built-in heat exchangers, shall be

Copyright ASME International
Provided by IHS under license with ASME
No reproduction or networking permitted without license from IHS
Not for Resale

TABLE 3.1
PERMISSIBLE DEVIATION FROM SPECIFIED OPERATING CONDITIONS FOR TYPE 1 TESTS

Variable	Symbol	Units	Permissible Deviation
Inlet pressure	p_i	psia	5%
Inlet temperature	T_i	°R	8%
Speed	N	rpm	2%
Molecular weight	MW	lbm/lbmole	2%
Cooling temperature difference		°R	5%
Coolant flow rate		gal/min	3%
Capacity	q_i	ft^3/min	4%

GENERAL NOTES:
(a) Type 1 tests are to be conducted with the specified gas. Deviations are based on the specified values where pressures and temperatures are expressed in absolute values.
(b) The combined effect of inlet pressure, temperature and molecular weight shall not produce more than an 8% deviation in the inlet gas density.
(c) The combined effect of the deviations shall not exceed the limited of Table 3.2. Cooling temperature difference is defined as inlet gas temperature minus inlet cooling water temperature.

TABLE 3.2
PERMISSIBLE DEVIATION FROM SPECIFIED OPERATING PARAMETERS FOR TYPE 1 AND 2 TESTS

		Limit of Test Values as Percent of Design Values	
Parameter	Symbol	Min	Max
Specific volume ratio	v_i/v_d	95	105
Flow coefficient	ϕ	96	104
Machine Mach number			
Centrifugal compressors		See Fig. 3.3	
Axial compressors	M_m	See Fig. 3.4	
Machine Reynolds number			
Centrifugal compressors [Note (1)]	Rem	See Fig. 3.5	
Axial compressors where the Machine Reynolds number at specified conditions is below 100,000		90	105
Axial compressors where the Machine Reynolds number at specified conditions is above 100,000		[Note (1)] 10	200

NOTE:
(1) Minimum allowable test Machine Reynolds number is 90,000.

Copyright ASME International
Provided by IHS under license with ASME
No reproduction or networking permitted without license from IHS Not for Resale

TABLE 3.3
LIMITS OF DEPARTURE FROM IDEAL GAS LAWS OF SPECIFIED AND TEST GASES

Pressure Ratio	Maximum Ratio	Allowed Range for Function X		Allowed Range for Function Y	
	k max/k min	Min	Max	Min	Max
1.4	1.12	−0.344	0.279	0.925	1.071
2	1.10	−0.175	0.167	0.964	1.034
4	1.09	−0.073	0.071	0.982	1.017
8	1.08	−0.041	0.050	0.988	1.011
16	1.07	−0.031	0.033	0.991	1.008
32	1.06	−0.025	0.028	0.993	1.006

GENERAL NOTES:
(a) Where:

$$X = \frac{T}{v}\left(\frac{\partial v}{\partial T}\right)_p - 1 \text{ and } Y = \frac{p}{v}\left(\frac{\partial v}{\partial p}\right)_T \text{ (See Figs. 3.6 and 3.7)}$$

(b) Maximum and minimum values of k shall apply to both the specified and test gas over the complete range of conditions.
(c) When these limits are exceeded by either the specified gas or the test gas at any point along the compression path real gas calculation methods shall be used for that gas. Ideal or real gas method may be used if these limits are not exceeded.

tested on the specified gas and at the operating conditions specified for the inlet pressure, inlet temperature and speed, and with the flow rate and the temperature specified for the cooling fluid. The fluctuations of the test readings shall be controlled within the limits of Table 3.4. The results shall be computed by the methods provided for a Type 1 test, and reported "as run."

3.3.2 The methods of this Code may be applied for conversion of test results to specified operating condition results for compressors which may be treated as one or more sections. A section is that portion of a compressor where no intermediate stream leaves or enters between one impeller inlet and the same or another following impeller discharge. See Table 3.2. Heat exchangers are excluded from the interior of the section boundaries. Section boundaries are indicated diagrammatically in Fig. 3.1. The gas state and flow rate shall be established for each stream where it crosses the section boundary. The power absorbed and heat loss or gain by natural ambient heat transfer must also be determined.

3.3.3 Compressors with externally piped intercoolers may be given a Type 1 test or they may be tested by individual sections using a Type 2 test.

3.3.4 Compressors with inlet or outlet sidestreams may be tested using the procedures for a Type 1 test providing all conditions, including those at the sidestream, meet the requirements of Table 3.1. Compressors with sidestreams may also be tested by individual sections utilizing the criteria for a Type 2 test.

3.3.5 Where condensation can take place between compression sections; for example, intercooled compressors handling moist air; the capacity shall be measured at the compressor discharge. (For atmospheric exhausters the flow shall be measured at the inlet.) Care shall be taken to assure that there is no liquid carry-over from the intercoolers.

3.3.6 Volume flow ratios may in practice differ between test and specified operating conditions due to leakage differences. For example, it is common to test at reduced inlet pressure and the reduced differential pressure across a seal to atmosphere could result in zero or negative leakage. As a result, volume flow ratio equality can not be achieved between test and specified conditions.

Therefore, it shall be necessary to estimate the leakage ratio; that is, the leakage mass flow divided by the inlet mass flow for both test and specified conditions. If the leakage ratio difference between test and specified is significant, these effects shall be applied to the calculations of capacity and power.

Copyright ASME International
Provided by IHS under license with ASME
No reproduction or networking permitted without license from IHS
Not for Resale

TABLE 3.4
PERMISSIBLE FLUCTUATIONS OF TEST READINGS[1]

Measurement	Symbol	Units	Fluctuation
Inlet pressure	p_i	psia	2%
Inlet temperature	T_i	°R	0.5%
Discharge pressure	p_d	psia	2%
Nozzle differential pressure	Δp	psi	2%
Nozzle temperature	T	°R	0.5%
Speed	N	rpm	0.5%
Torque	τ	lbf · ft	1%
Electric motor input		kW	1%
Molecular weight	MW	lbm/lbmole	0.25%
Cooling water inlet temperature	T	°R	0.5% [Note (2)]
Cooling water flow rate		gal/min	2%
Line voltage		volts	2%

GENERAL NOTES:
(a) A fluctuation is the percent difference between the minimum and maximum test reading divided by the average of all readings.
(b) Permissible fluctuations apply to Type 1 and Type 2 tests.

NOTES:
(1) See para. 5.4.2.3.
(2) See para. 4.16 for further restrictions.

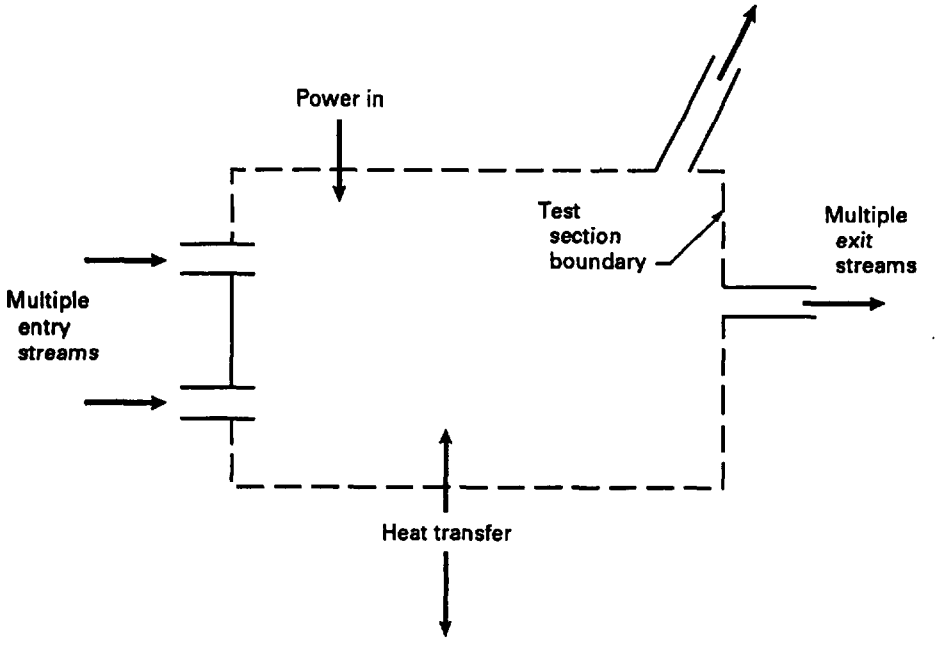

FIG. 3.1 SECTION CONTROL VOLUMES

Copyright ASME International
Provided by IHS under license with ASME
No reproduction or networking permitted without license from IHS
Not for Resale

In many cases it is not practical to measure the leakage flow and it is permissible to use calculated values of leakage for test and specified conditions.

3.3.7 Where the efficiency is to be determined by shaft input power measurements the bearing and seal losses should not exceed 10 percent of the total test power. This will minimize the effect of uncertainties in the bearing and seal loss determination of gas power.

3.3.8 Evaluation of performance of components between sections, if any, such as heat exchangers, piping, valves, etc., is generally beyond the scope of this Code and shall be agreed upon by parties to the test. The specified operating condition performance of such components or the technique for correction of test results to specified operating conditions shall be agreed upon by parties to the test.

3.3.9 When power is to be determined by the heat balance method, the heat losses due to radiation and convection, expressed in percent of the total shaft power, shall not exceed 5 percent.

3.3.10 For Type 2 tests, the inlet gas condition shall have a minimum of 5°F of superheat.

3.4 TEST GAS AND SPEED

3.4.1 The physical and thermodynamic properties of the specified and test gas shall be known. The option of using tabulated data, an equation of state correlation, or experimental determination as a source for these properties shall be agreed upon prior to the test.

3.4.2 The following physical properties of the test gas throughout the expected pressure and temperature range shall be known or accurately determined:

(a) molecular weight
(b) specific heat at constant pressure (c_p)
(c) ratio of specific heats (c_p/c_v)
(d) compressibility factor (Z)
(e) dew point
(f) viscosity
(g) isentropic exponent
(h) enthalpy
(i) acoustic velocity

3.4.3 The test speed shall be selected so as to conform to the limits of Table 3.2. The test speed shall not exceed the safe operating speed of the compressor. Consideration should be given to critical speeds of rotating equipment in selecting the test speed.

Test pressures and temperatures shall not exceed the maximum allowable pressures and temperatures for the compressor.

3.5 INTERMEDIATE FLOW STREAMS

3.5.1 Section Treatment. Compressors having flows added or removed at intermediate locations between the inlet and final discharge are handled by treating the compressor by sections. The gas state and flow rate shall be established for each stream where it crosses the section boundary.

3.5.2 It is necessary to maintain a consistency between specified volume flow rate ratio and test volume flow rate ratio for each section. Permissible deviations from these ratios are listed in Fig. 3.2.

As an example, in the first section of a multisection compressor, the ratio of inlet volume flow rate to discharge volume flow rate for the specified and test conditions must be held to within ±5 percent which is the same as that required for conventional compressors in Table 3.2. In addition, it is required that the ratio of first stage section discharge flow rate to second section inlet volume flow rate for the specified and test conditions be held to within ±10 percent. This is required so that the total pressure determined at the sidestream flange will have the same relationship to the total pressure actually existing at the exit of the first section boundary for specified and test conditions.

For the second and succeeding sections the requirements are similar. The ratio of inlet volume flow rate to discharge volume flow rate for specified and test conditions must be held to within ±5 percent.

Also, the preceding section discharge volume flow rate to sidestream inlet volume flow rate ratio for specified and test conditions must be held to ±10 percent. Finally, the ratio of the discharge volume flow rate of the section being tested to the next sidestream volume flow rate must also be held to ±10 percent.

This requirement is most important in the second section of a three section machine where both inlet and discharge total pressures are being determined at the sidestream flanges and velocity similarities are necessary for test accuracy. Code requirements are also described in equation form in Fig. 3.2.

Copyright ASME International
Provided by IHS under license with ASME
No reproduction or networking permitted without license from IHS
Not for Resale

Copyright ASME International
Provided by IHS under license with ASME
No reproduction or networking permitted without license from IHS

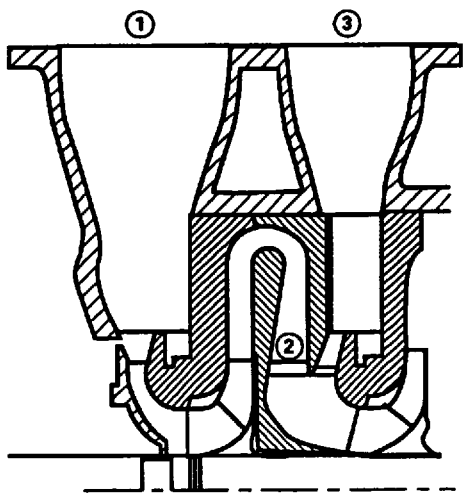

Section 1

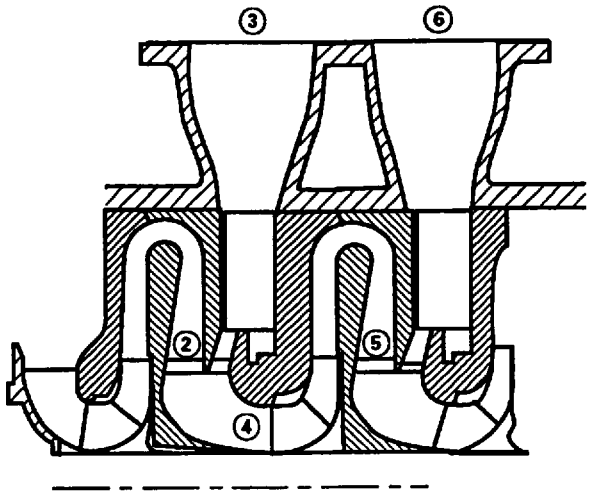

Section 2

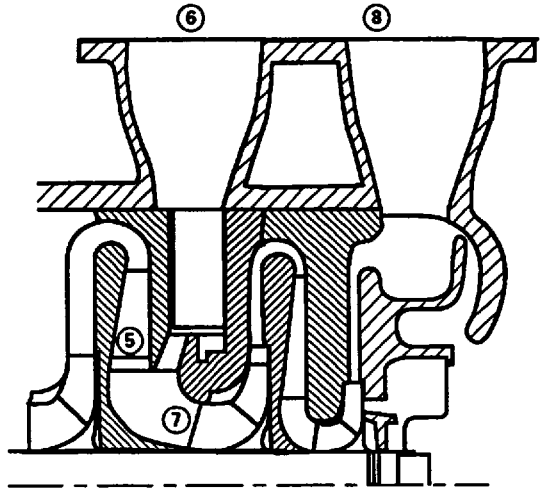

Section 3

		Min.	Max.
$r_{q1\text{-}2} = \frac{q_1}{q_2}$	$\frac{(r_{q1\text{-}2})t}{(r_{q1\text{-}2})sp}$	95	105
$r_{q3\text{-}2} = \frac{q_3}{q_2}$	$\frac{(r_{q2\text{-}2})t}{(r_{q2\text{-}2})sp}$	90	110

		Min.	Max.
$r_{q3\text{-}2} = \frac{q_3}{q_2}$	$\frac{(r_{q3\text{-}2})t}{(r_{q1\text{-}2})sp}$	90	110
$r_{q4\text{-}5} = \frac{q_4}{q_5}$	$\frac{(r_{q4\text{-}5})t}{(r_{q4\text{-}5})sp}$	95	105
$r_{q6\text{-}5} = \frac{q_6}{q_5}$	$\frac{(r_{q6\text{-}5})t}{(r_{q6\text{-}5})sp}$	90	110

		Min.	Max.
$r_{q6\text{-}5} = \frac{q_6}{q_5}$	$\frac{(r_{q6\text{-}5})t}{(r_{q6\text{-}5})sp}$	90	110
$r_{q7\text{-}8} = \frac{q_7}{q_8}$	$\frac{(r_{q7\text{-}8})t}{(r_{q7\text{-}8})sp}$	95	105

where:

subscript 1 = Section 1 inlet from flange measurements

2 = Section 1 discharge computed from measurements before sidestream

3 = Section 2 inlet from flange measurements

subscript 4 = Section 2 mixed inlet computed

5 = Section 2 discharge computed from internal measurements before sidestream

6 = Section 3 inlet from flange measurements

subscript 7 = Section 3 mixed inlet computed

8 = Section 3 discharge from flange measurements

FIG. 3.2 TYPICAL SIDELOAD SECTIONAL COMPRESSORS

Not for Resale

3.5.3 Inward Sidestreams. When the sidestream flow is inward, the discharge temperature of the preceding section shall be measured prior to the mixing of the two streams. This temperature measurement shall be made in a portion of the discharge flow stream where the sidestream cannot affect the raw data. Raw data may be affected by heat transfer from a cold sidestream to a hot mainstream flow or from recirculation which may occur within the flow passage. The discharge temperature is needed to compute the performance of the preceding section and to compute the reference mixed temperature for the next section inlet.

It is possible for internal total pressures to exceed flange total pressure due to the higher internal velocities. The higher internal velocities are accompanied by a lower static pressure which provides a pressure difference for inward flow.

3.5.4 Temperature Stratification. It is common for sideload sectional compressors to have temperature differences between the mainstream and sidestream. When testing all sections of a multisection compressor (three or more sections) simultaneously, large differences between the sidestream and mainstream temperatures may occur. It is possible, due to these differences, for thermal flow stratification to exist within the compressor sections. This stratification may result in inaccurate measurements of internal temperatures in downstream sections. Under test conditions, the stream temperature differences should be maintained as close to specified as practical.

3.5.5 Performance Definition. The sectional head, efficiencies, and pressures are defined flange to flange. The only internal measurements needed are the sectional discharge temperatures for computing the mixed temperature conditions and sectional performance. The pressure used for calculating the sectional performance is assumed to be equal to the sidestream flange total pressure.

The internal mixed temperature should be computed on a mass enthalpy basis (real gas evaluation) for obtaining the inlet temperature for succeeding sections. Simplified mixing based on mass temperature may be done for ideal gases with constant specific heat. For further information see para. E.5 of Appendix E.

3.5.6 Extraction Sidestreams. When the intermediate flows are removed (i.e., bleed-off) from the compressor, they will cross a section boundary.

The internal temperature and pressure can be assumed to be equal to the external flange temperature and pressure of the primary internal stream. The ratio of flow rate restrictions in Fig. 3.2 shall also apply to outward flowing sidestreams.

3.5.7 It is recommended that each section of a multisection machine have its own performance curve defined by a number of test points. This enables synthesis of the combined overall performance curve and provides data on the interrelations of the individual sections. The ratios of Fig. 3.5 will apply at all points unless other specified operating ratios are identified.

3.6 SAFETY

3.6.1 The test gas used shall be in compliance with local regulations and prudent practice with regard to flammability and/or toxicity.

3.6.2 Test gases used in a closed loop shall be continuously monitored for composition and avoidance of combustible mixtures. Air or other oxidizing gases shall not be used in a closed loop.

3.6.3 The party providing the test site will be responsible for establishing the requirements of system protection. Consideration should be given to the need for relief valves for accidental overpressure. The requirement of alarms and/or automatic shutdown devices for such items as high temperature, loss of cooling water, low oil pressure, compressor overspeed, or other possible malfunctions should be reviewed.

3.7 PIPING

3.7.1 Piping arrangements required to conduct a test under the Code are detailed in Section 4. Permissible alternates are described for convenience and suitability. A selection suitable for the prevailing test conditions shall be made and described in the test report. When the choke point is to be determined, care should be taken to assure that the compressor pressure rise shall exceed system resistance.

3.7.2 Minimum straight lengths of piping at the inlet, discharge, and on both sides of the flow device are specified in Section 4.

When compressors are treated as a number of individual sections, these piping requirements apply to each section. Such piping between sections may not occur naturally in the design. When it does

Copyright ASME International
Provided by IHS under license with ASME
No reproduction or networking permitted without license from IHS
Not for Resale

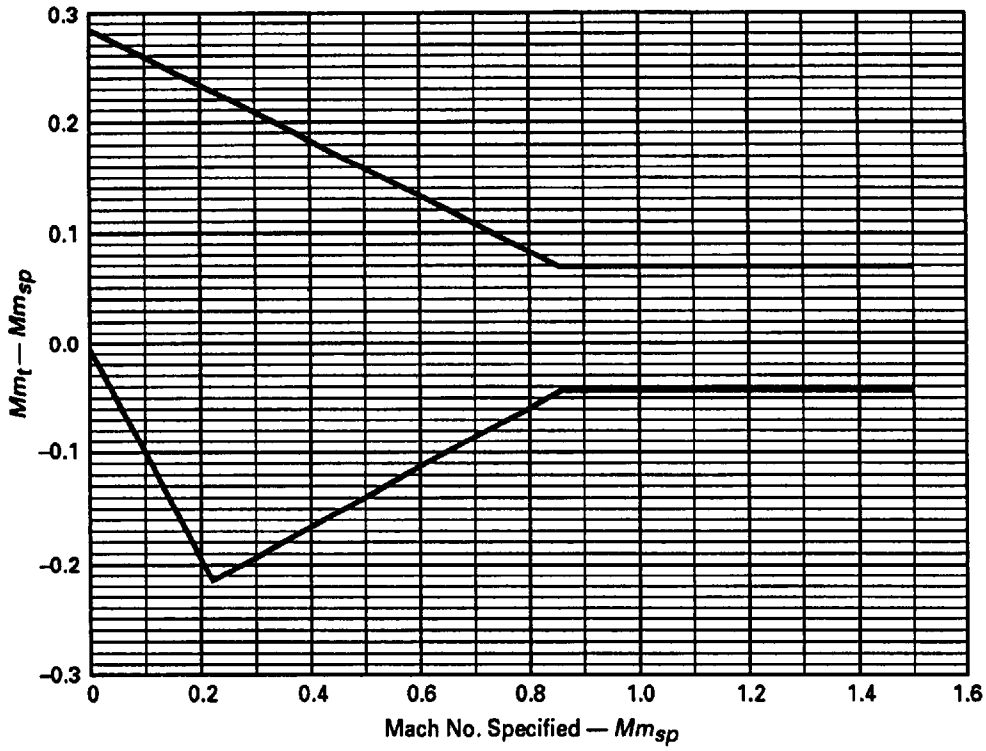

FIG. 3.3 ALLOWABLE MACHINE MACH NUMBER DEPARTURES, CENTRIFUGAL COMPRESSORS

not, the parties to the test should elect by mutual agreement to:

(a) install additional piping between the sections

(b) take measurements in the available space. Consideration shall be given to any compromise in measurement accuracy and its effect upon the final test objective.

(c) remove components such as external heat exchangers and replace them with the required piping. When this alternate is selected it is important that the removal of the component have a negligible effect upon the section entry or exit flowfield so as not to affect the section performance parameters.

3.7.3 Where external intercooler performance and pressure drop are known for the specified operating conditions, or determined on a separate test, the compressor may be tested as separate sections and the combined performance computed by the method described in Section 5.

3.7.4 If a closed loop test is to be performed, the maximum pressure to be obtained and the maximum heat load shall be estimated. The piping and cooler from the compressor discharge to the throttle valve shall be designed for the maximum pressure plus a suitable safety factor and the cooler shall be sized to dissipate the maximum heat load. Additional lengths of piping beyond the minimum prescribed may be required to provide additional system capacitance. Provisions may be necessary to allow for expansion of the piping and the piping design shall be of sufficient strength to withstand the stresses imposed during compressor surge.

3.8 INSTRUMENTATION

Test instruments shall be selected, calibrated, and installed in accordance with the requirements of Section 4.

3.9 PRETEST INSPECTION

Pretest inspection may be of interest to either party. Refer to PTC 1 for guidance.

Copyright ASME International
Provided by IHS under license with ASME
No reproduction or networking permitted without license from IHS Not for Resale

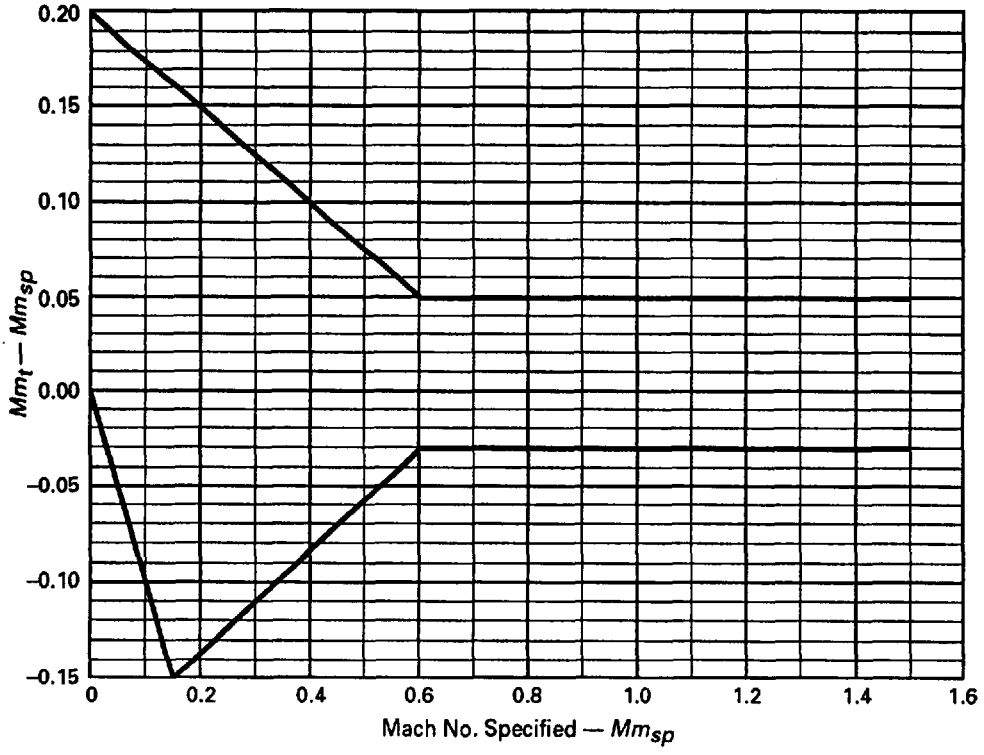

FIG. 3.4 ALLOWABLE MACHINE MACH NUMBER DEPARTURES, AXIAL COMPRESSORS

3.10 PRETEST RUN

3.10.1 The compressor shall be operated for sufficient time at the required conditions to demonstrate acceptable mechanical operation and stable values of all measurements to be taken during the test. Preliminary data shall be taken to familiarize test personnel, to determine if all instruments are functioning properly, and to ascertain if the reading fluctuations fall within the limits prescribed in Table 3.4.

3.10.2 All instrument observations pertinent to the test shall be taken during the pretest run. They commonly include the following:

(a) inlet pressure
(b) inlet temperature
(c) relative humidity or wet bulb temperature, if atmospheric air is the test gas
(d) discharge pressure
(e) discharge temperature and/or shaft power input
(f) flow device pressures and temperatures
(g) speed
(h) cooler inlet and outlet temperatures, gas and coolant sides, if applicable
(i) lubricant temperatures, inlet and outlet of bearings, seals, and speed changing gear, if applicable
(j) coolant and lubricant flows, if applicable
(k) barometric pressure
(l) gas analysis, if atmospheric air is not the test gas
(m) time

3.10.3 A set of calculations shall be made using the preliminary test data to assure that the correct test speed has been selected, that the test parameters required in Tables 3.1 or 3.2, as applicable, were obtained and that the overall performance values are reasonable.

3.10.4 The pretest run may be considered as part of the test if it meets all requirements of the test.

3.11 TEST OPERATION

3.11.1 The compressor shall be operated at the required conditions for a sufficient period of time to demonstrate that all variables have stabilized.

3.11.2 When all variables have stabilized, the test personnel shall take the first set of readings of all

Copyright ASME International
Provided by IHS under license with ASME
No reproduction or networking permitted without license from IHS
Not for Resale

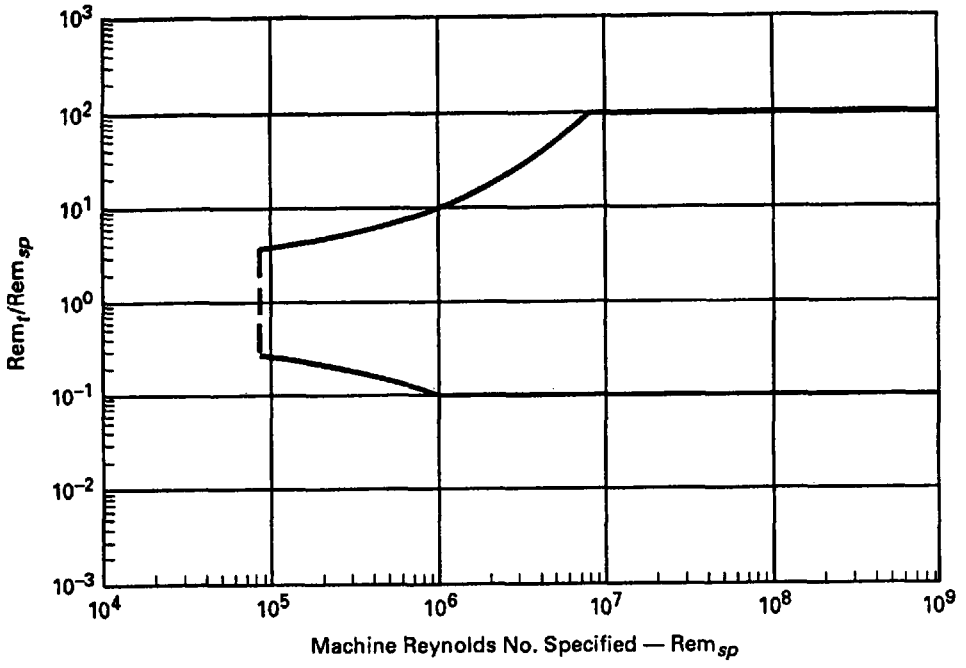

GENERAL NOTE: 90,000 is cutoff

FIG. 3.5 ALLOWABLE MACHINE REYNOLDS NUMBER DEPARTURES, CENTRIFUGAL COMPRESSORS

essential instruments. Three sets of readings shall be taken during each test point.

3.11.3 The minimum duration of a test point, after stabilization, shall be 15 minutes from the start of the first set of readings to the end of the third set of readings.

3.11.4 When a test is only to verify a single specified condition, the test shall consist of two test points which bracket the specified capacity within a range of 96 percent to 104 percent.

3.11.5 When performance curves are required to verify the complete compressor range of operation, a multipoint test shall be performed. Each point selected along the curve shall be assumed to be a specified point and checked for equivalency. This may require a different equivalent speed for each test point. Usually five points should be used to complete a curve. A point shall be taken at approximately the specified capacity. The additional points should consist of one point near surge, two points between specified capacity and surge, and one point in the overload range (preferably 105 percent or greater of specified capacity). When the compressor is used with a variable speed driver additional points may be run on selected speed lines, provided that an equivalent speed is generated for each operating point selected.

3.11.6 The flow at which surge occurs can be determined by slowly reducing the flow rate at the test speed until indications of unstable or pulsating flow appear. The severity of surge will vary widely as a function of pressure ratio, type of compressor, and capacitance of the piping system. Surge may be identified by noise, fluctuations in the differential pressure of the flow nozzle, or a drop and/or fluctuation of the pressure and/or temperature.

When the surge flow has been identified, the flow should be increased slightly until stable operation is restored so that a complete set of performance data may be taken. This process may be repeated a second time to demonstrate the reliability of the initial setting.

It should be understood that a surge flow established in a shop test may not define the surge conditions which will occur in the field due to

Copyright ASME International
Provided by IHS under license with ASME
No reproduction or networking permitted without license from IHS
Not for Resale

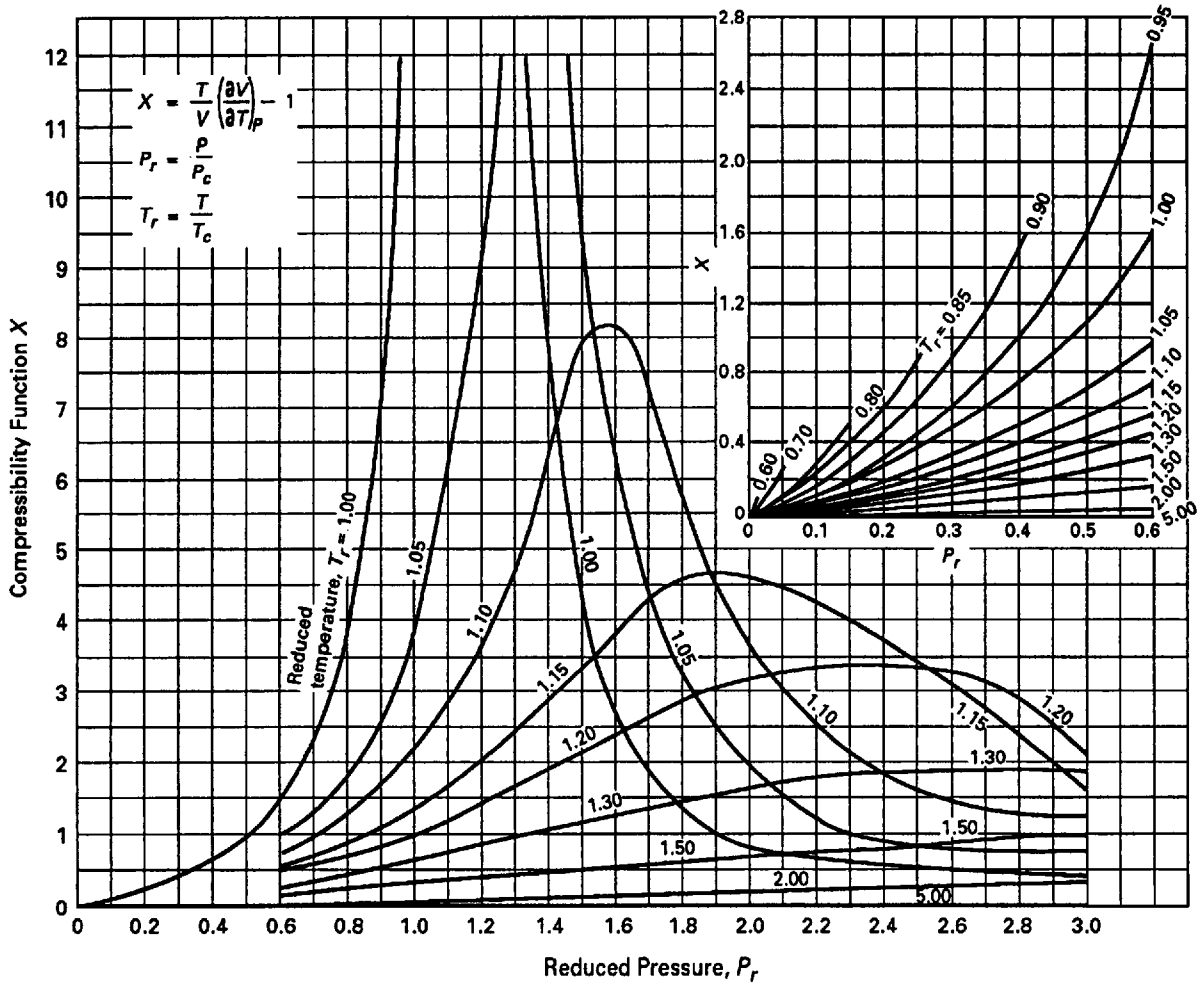

FIG. 3.6 SCHULTZ COMPRESSIBILITY FACTOR — FUNCTION *Y* VERSUS REDUCED PRESSURE

differences in piping configuration and system response.

3.11.7 The choke flow may be determined by gradually opening the discharge throttle valve while maintaining speed and inlet pressure until the flow remains essentially constant with decreasing discharge pressure.

If the compressor is to be operated as an exhauster or tested with an open discharge, the choke flow may be determined by gradually opening the inlet valve while holding speed and discharge pressure constant.

If choke flow is to be determined, the facilities shall be designed so as not to limit maximum flow.

3.12 INCONSISTENCIES

3.12.1 Where four independent instruments are used to measure a pressure or temperature value and one recorded observation is inconsistent due to measurement error, its value shall be discarded and the value determined from the average of the other three. Where fewer than four independent measuring devices are used, all values shall be used and averaged to determine the measurement value.

3.12.2 The three readings for each test point shall be within the fluctuation tolerances listed in Table 3.4.

Copyright ASME International
Provided by IHS under license with ASME
No reproduction or networking permitted without license from IHS
Not for Resale

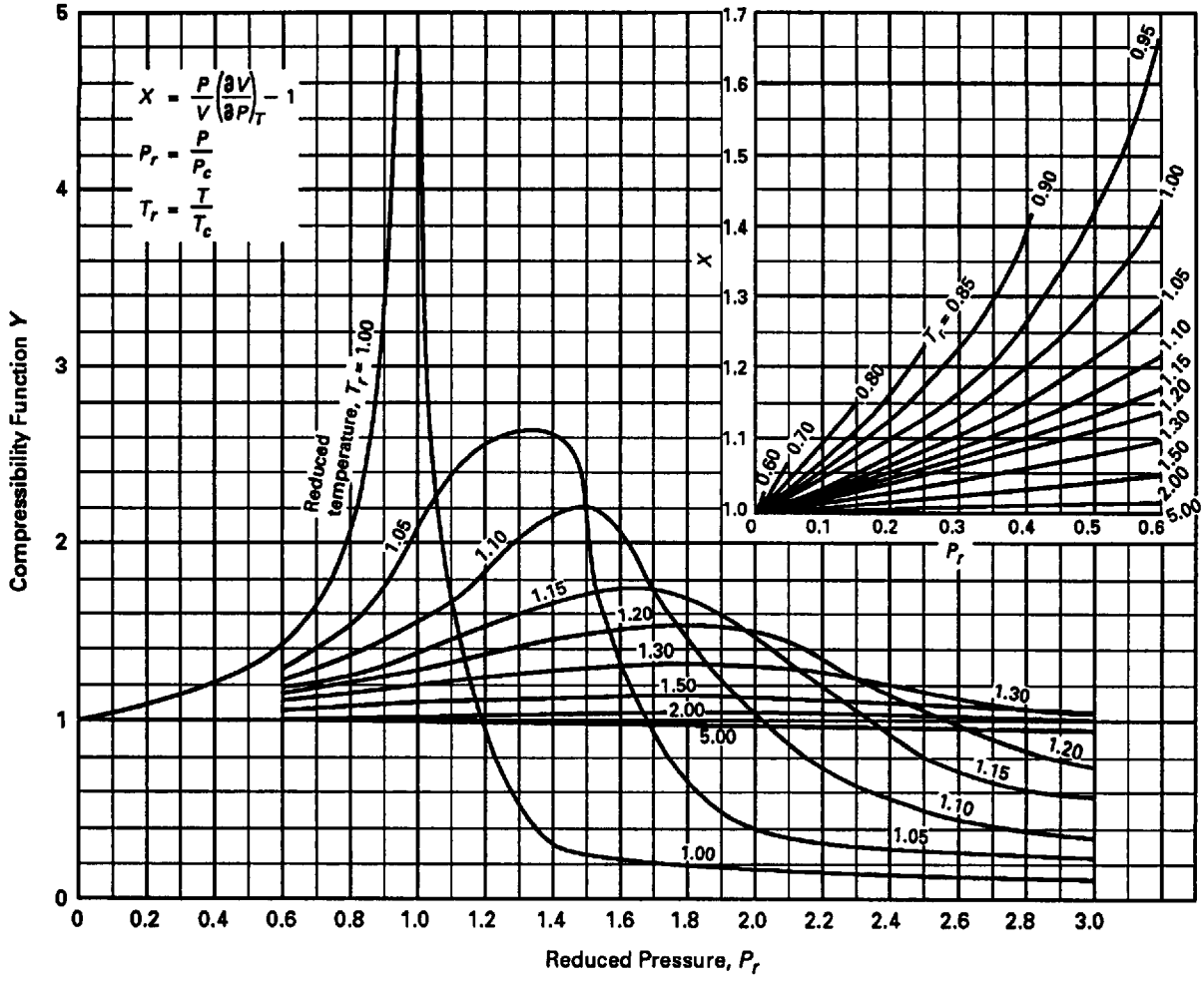

FIG. 3.7 SCHULTZ COMPRESSIBILITY FACTOR — FUNCTION *X* VERSUS REDUCED PRESSURE

3.13 ERRORS AND UNCERTAINTIES

3.13.1 It should be recognized that the results of the test calculations are subject to error caused by the inaccuracies of the test instruments and/or procedures. It is recommended that an uncertainty analysis be made prior to the test to assure that the test objectives can be met. The detailed procedures are given in PTC 19.1 and are discussed in para. 5.7 of this Code.

3.13.2 The uncertainty is a measure of the quality of the test and should not be used as a measure of the quality of the machine.

3.14 TEST LOG SHEETS

The test log sheet shall identify the compressor manufacturer, model, and serial number. Test location, driver identification, test instruments used, and test date shall be listed. Raw data for each test point shall be recorded as observed on the test log sheet as well as the time of each set of data. Corrections and corrected readings shall be listed separately in the test report.

At the completion of the test the log sheets shall be signed by the representatives of the interested parties. Copies of the complete log sheets shall be furnished to the interested parties. The test report shall be completed in accordance with the instructions in Section 6.

Copyright ASME International
Provided by IHS under license with ASME
No reproduction or networking permitted without license from IHS Not for Resale

SECTION 4 — INSTRUMENTS AND METHODS OF MEASUREMENT

4.1 METHODS

4.1.1 The choice of methods provided in this Code will depend on the compressor, the specified gas, and the type of test selected.

4.2 INSTRUMENTATION

4.2.1 The Performance Test Code Supplements in the PTC 19 series on Instruments and Apparatus provide authoritative information concerning instruments and their use and should be consulted for such information. The selection of instrumentation shall be determined by the uncertainty limit requirements of the test as well as suitability for the test site conditions. The instrument selection shall be justified by calculation that the uncertainty in results meets the stated test objectives.

Instrumentation is required to determine the inlet and discharge gas states, flow rate, and compressor speed. Depending upon the method selected, additional instrumentation may be required to determine test power.

4.3 PIPING

4.3.1 The location of the pressure and temperature measuring stations have specific relation to the compressor inlet and outlet openings. The pipe sizes shall match these openings. Minimum lengths of straight pipe are mandatory for certain pressure and temperature measurement stations and for certain flow devices. Pipe arrangements and allowable exceptions are described in this Section. Appropriate selections shall be made and described in the test report.

4.3.2 Typical inlet piping required for compressors is outlined in Fig. 4.1. The minimum straight length of inlet pipe is determined by what is upstream of the inlet opening. The four static pressure taps are a minimum of 24 in. upstream of the inlet opening. Downstream of the pressure taps are four temperature taps displaced 45 deg. from them and at least 12 in. downstream.

In special cases when atmospheric conditions satisfy the requirements, the compressor may be run without an inlet pipe as shown in Fig. 4.2. The inlet opening shall be protected with a screen and bellmouth suitably designed to eliminate debris and minimize entrance losses (see para. 4.4). The total inlet pressure is equal to atmospheric pressure. Temperature measuring devices shall be located on the screen to measure the temperature of the air stream at the compressor inlet.

For compressors with an axial inlet, the impeller may, under some conditions, produce a vortex at the pressure station to cause substantial error in the measurement of inlet pressure. Users of this Code, by agreement, may use vanes suitably designed for low pressure loss to prevent rotation at the pressure taps. The static pressure stations shall not be less than four pipe diameters upstream of the compressor flange as shown in Fig. 4.3.

4.3.3 Typical discharge piping required for compressors are outlined in Fig. 4.1. The minimum straight length of discharge pipe required before and after the instrumentation is specified. The four static pressure taps are a minimum of 12 in. downstream of the discharge opening. The pressure taps are followed by the four temperature taps displaced 45 deg. from them and at least 8 in. downstream.

An alternate arrangement may be used when a compressor operating as an exhauster on air has a discharge velocity pressure less than 5 percent of the total pressure. In this case the compressor can be run without a discharge pipe as shown in Fig. 4.4. The discharge temperature of the gas stream is measured at the compressor discharge.

When the compressor has a volute that produces unsymmetrical flow at the discharge opening the static pressure taps shall be a minimum of six diameters downstream as shown in Fig. 4.5. The other minimum dimensions are specified in Fig. 4.1. Straightening vanes designed for low pressure loss,

Copyright ASME International
Provided by IHS under license with ASME
No reproduction or networking permitted without license from IHS
Not for Resale

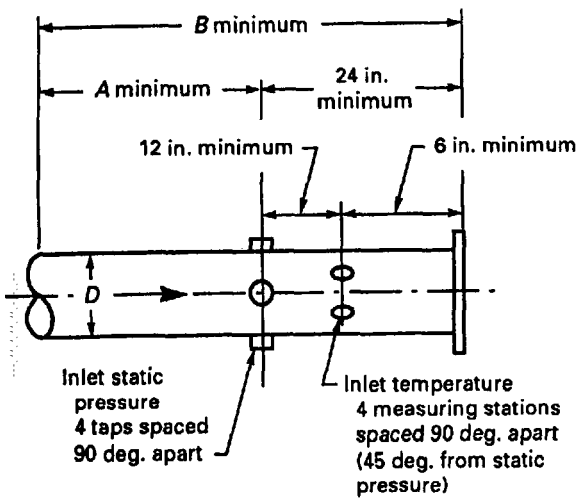

Inlet Opening Preceded By	Minimum Dimension	
	A	*B*
Straight run	2*D*	3*D*
Elbow	2*D*	3*D*
Reducer	3*D*	5*D*
Valve	8*D*	10*D*
Flow device	3*D*	5*D*

For open inlet, see Fig. 4.2.

For vortex producing axial inlet, see Fig. 4.3.

Inlet Configuration

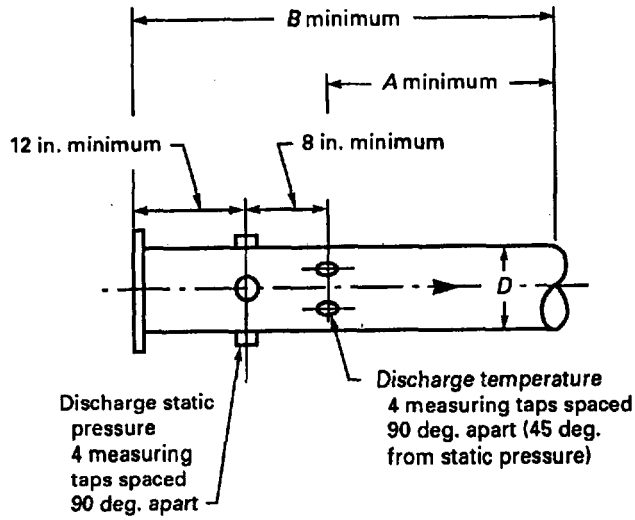

Discharge Opening Followed By	Minimum Dimension	
	A	*B*
Straight run	2*D*	3*D*
Elbow	2*D*	3*D*
Reducer	3*D*	5*D*
Valve	3*D*	5*D*
Flow device	8*D*	10*D*

For open discharge, see Fig. 4.4.

For diffusing volute with unsymmetrical flow, see Fig. 4.5.

Discharge Configuration

FIG. 4.1 INLET AND DISCHARGE CONFIGURATION

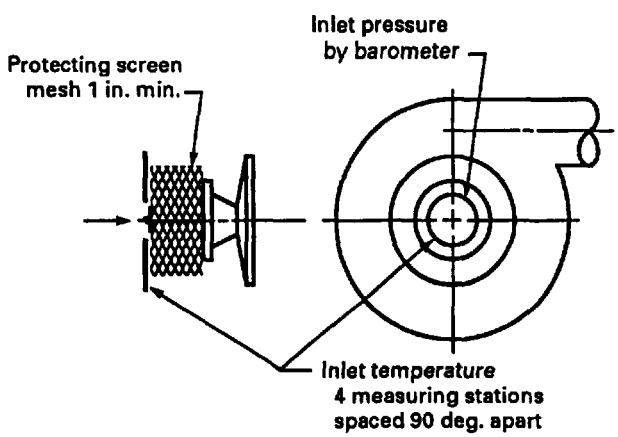

FIG. 4.2 OPEN INLET

Copyright ASME International
Provided by IHS under license with ASME
No reproduction or networking permitted without license from IHS
Not for Resale

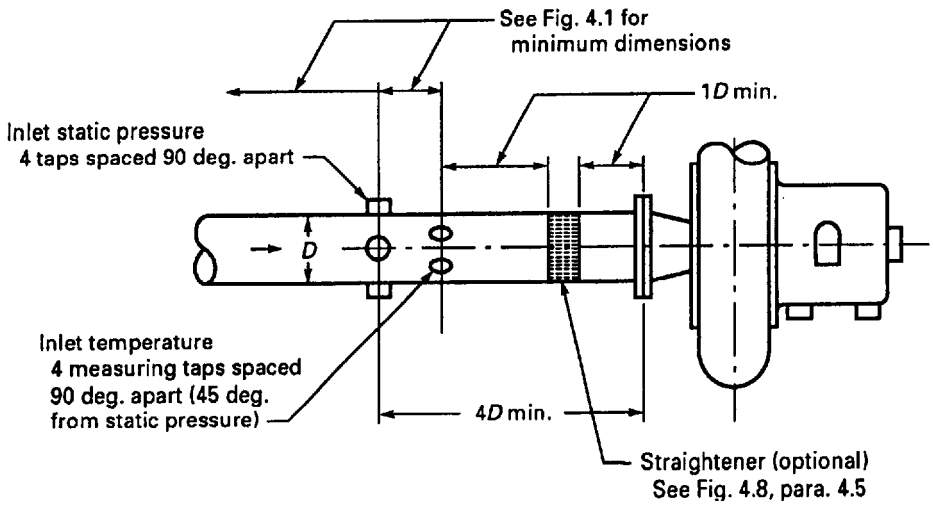

FIG. 4.3 VORTEX PRODUCING AXIAL INLET

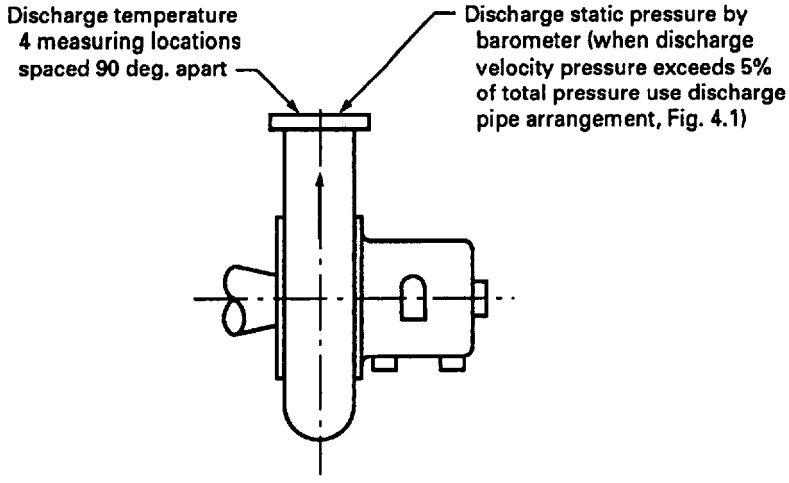

FIG. 4.4 OPEN DISCHARGE

as covered in para. 4.5, may be used by mutual agreement to minimize the effect of the unsymmetrical flow.

4.3.4 Figures 4.6 and 4.7 show a typical arrangement for testing with a general closed loop and closed loop with sidestreams.

4.4 PROTECTIVE SCREENS

4.4.1 Compressors operating with an open inlet shall be protected with a screen or filter, suitable for the conditions. In general, a screen on the inlet must be strong enough to prevent collapse in the event of accidental clogging. The mesh of a screen shall be selected to prevent entry of foreign matter which might damage the compressor and impair its performance. Reliable tests cannot be made on atmospheric air laden with dust, oil-fog, paint spray, or other foreign matter which may foul the flow passage of the compressor. Protective screens shall have an open area at least two times that of the compressor inlet or the nozzle pipe. When screens with very small mesh or filters are used, inlet pressure

Copyright ASME International
Provided by IHS under license with ASME
No reproduction or networking permitted without license from IHS Not for Resale

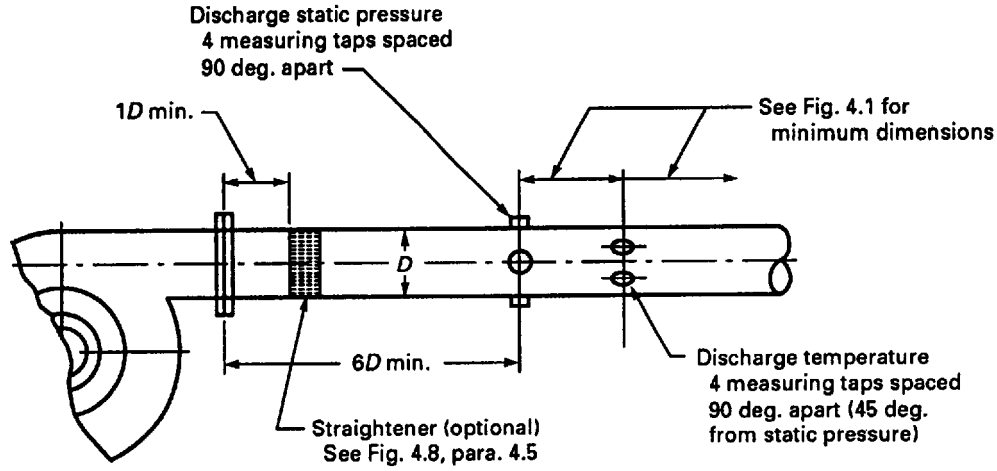

FIG. 4.5 DIFFUSING VOLUTE DISCHARGE WITH NONSYMMETRIC FLOW

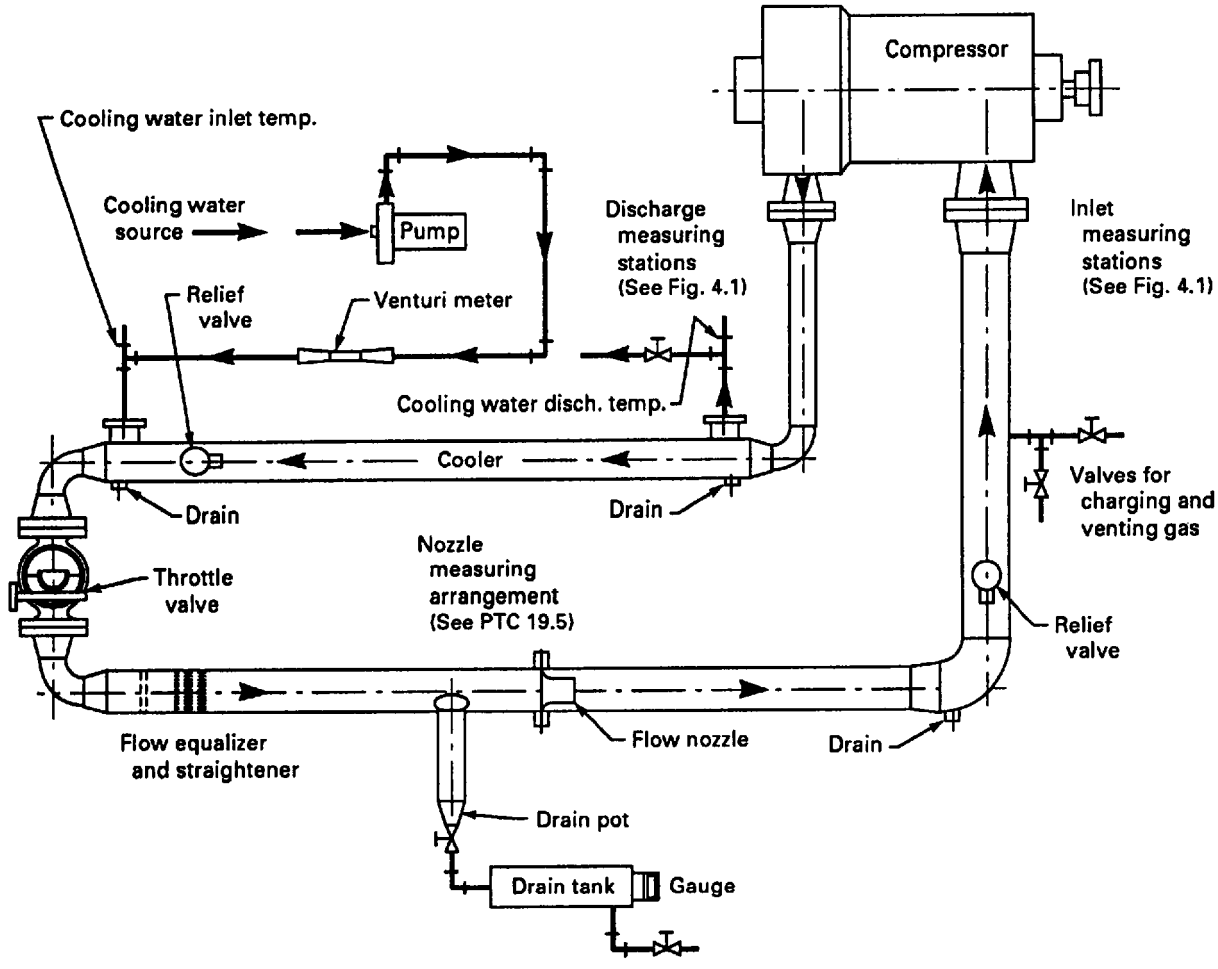

FIG. 4.6 TYPICAL CLOSED LOOP

Copyright ASME International
Provided by IHS under license with ASME
No reproduction or networking permitted without license from IHS
Not for Resale

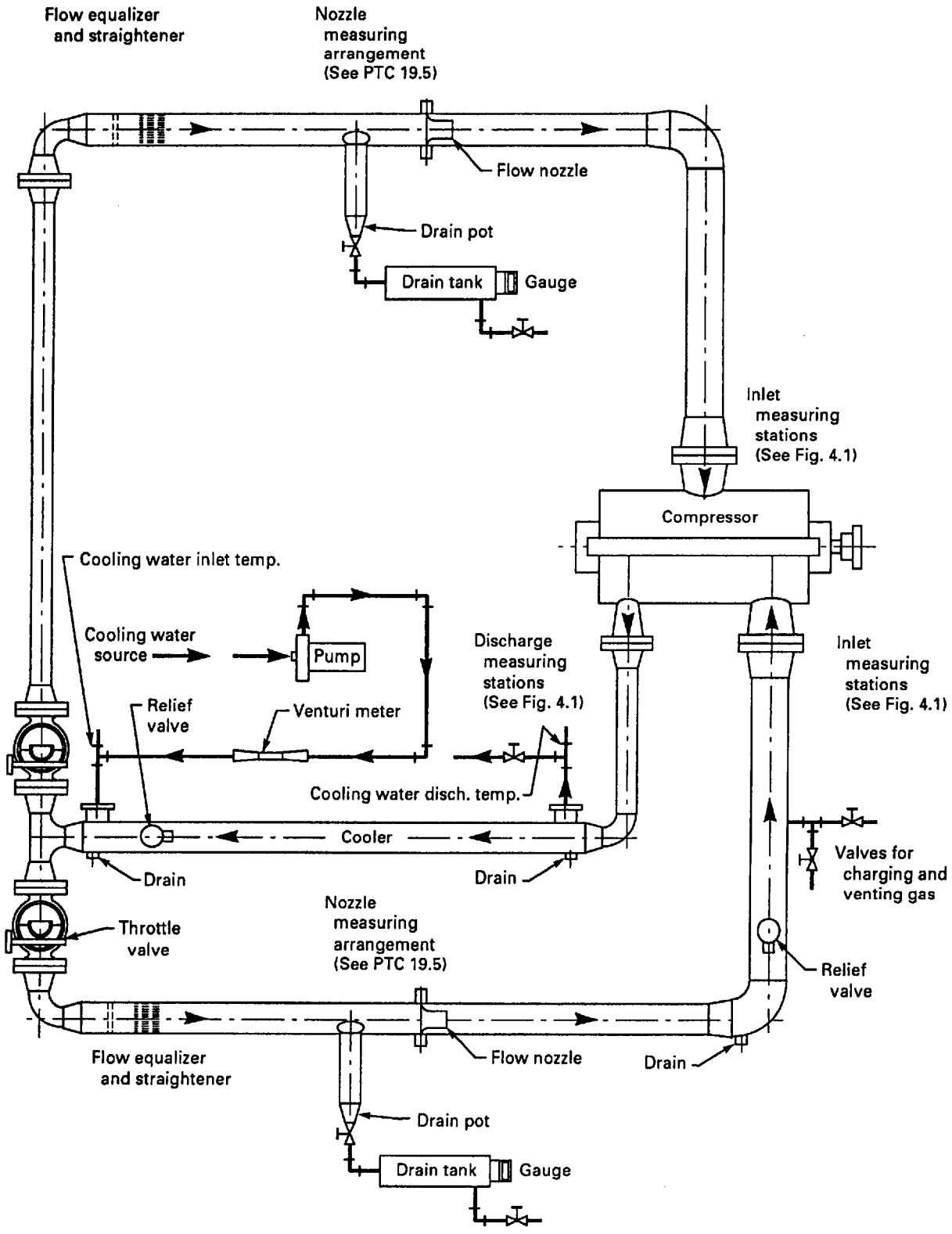

FIG. 4.7 TYPICAL CLOSED LOOP WITH SIDESTREAM

Copyright ASME International
Provided by IHS under license with ASME
No reproduction or networking permitted without license from IHS Not for Resale

shall be measured by static taps as provided in Fig. 4.1 for straight pipe. Where screens or filters are used in a closed loop, precautions such as measurement of the differential pressure are recommended.

4.5 FLOW STRAIGHTENERS AND EQUALIZERS

4.5.1 Flow straighteners may be installed by mutual agreement of the parties to the test as shown in Figs. 4.3 and 4.5. These flow straighteners may be of the simple vane type, Fig. 4.8, sketch (a), where L/D will be equal to or greater than unity, or of the multitube type, Fig. 4.8, sketch (b), where the length–diameter ratio of the tube shall be equal to or greater than eight and a maximum tube diameter of $\frac{1}{8}D$.

4.5.2 Flow equalizers shall be installed if required in PTC 19.5. See Fig. 4.8, sketch (c). Flow equalizers shall be a multihole plate, designed to produce a minimum static pressure drop of two times the calculated velocity pressure for the pipe section. The total area required of the holes may be determined from the following formula:

$$\frac{A_h}{A_p} = \frac{(q_i \rho_i)}{24 D_p^2 (\Delta p \rho_p)^{1/2}}$$

where

A_h = total area of holes in plate, sq in.
A_p = area of cross section or pipe, sq in.
q_i = inlet volume flow, cfm
ρ_i = inlet density, lbm per cu ft
D_p = diameter of pipe, in.
ρ_p = density of gas in pipe upstream of plate, lbm per cu ft
Δ_p = pressure drop across plate, psi

The plate should contain not less than 50 holes per square foot of area, uniformly spaced, but not less than 50 holes minimum.

4.5.3 A combined flow equalizer and flow straightener is used with flow nozzles where required by PTC 19.5. See Fig. 4.8, sketch (d). The flow straightener shall be the multitube type as shown in Fig. 4.8, sketch (b), preceded by a flow equalizer one-half pipe diameter upstream. Alternatively three flow equalizers spaced one pipe diameter apart may be used as shown in Fig. 4.8, sketch (e).

4.6 PRESSURE MEASUREMENTS

4.6.1 Reference should be made to PTC 19.2, for general information on instruments to measure pressure. For the range of pressures likely to be measured in compressor test, the manometer and the deadweight gage shall be used as standards. Pressure transducers and other pressure measurement devices can be used. These can be calibrated using deadweight testers or manometers. Deadweight testers shall be certified by a competent laboratory. Where gage lines are filled with liquids, means shall be provided to measure the liquid level, and a correction shall be applied for unbalanced liquid head.

4.6.2 Bourdon tubes or similar gages should be selected to operate in the mid-range of the scale. The diameters of the scales and the arrangement of the graduations shall permit easy reading. The temperature of the gage during calibration shall be within 40°F of the ambient temperature prevailing during the test.

4.6.3 Manometers can be either U-tube or single leg design. Small bore manometers are subject to appreciable error resulting from capillary forces, variable meniscus, and restricted separation of entrained gas bubbles. These errors vary with the type of fluid, the tube diameter, and the tube cleanliness. Single leg manometers shall be checked for zero position before and after test. Manometer fluid shall be chemically stable when in contact with the test gases and metal parts of the instrument.

The specific gravity and the coefficient of temperature expansion of the fluid shall be determined before the test. See PTC 19.2 for further guidance.

4.6.4 Deadweight gages and testers shall be selected to suit the pressure range. Deadweight gages cannot measure rapid pressure changes and where necessary they shall be installed in parallel with a Bourdon tube gage, transducer, or other instrument.

4.6.5 Transducers shall be selected with pressure ranges appropriate for the expected test pressures. They must be calibrated before and after each test.

When automated data collection equipment is used with a pressure switching device, and a single transducer, that transducer shall be selected to cover the entire range of pressure. When using pressure switching devices, sufficient time between successive switch points shall be allowed so that the transducer pressure will reach equilibrium for the selected pres-

Copyright ASME International
Provided by IHS under license with ASME
No reproduction or networking permitted without license from IHS
Not for Resale

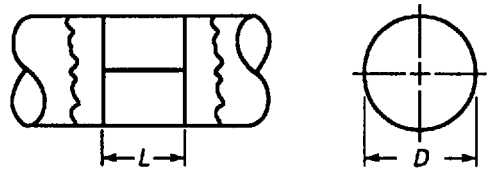

(a) Simple-Vane Flow Straightener

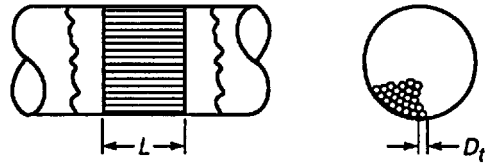

(b) Multi-Tube Flow Straightener

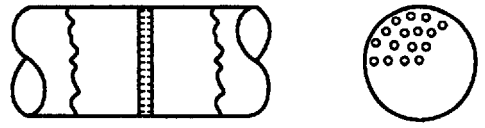

(c) Equalizer (Perforated Plate or Screen)

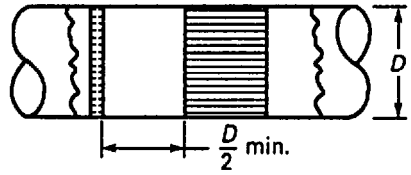

(d) Combination Equalizer and Straightener

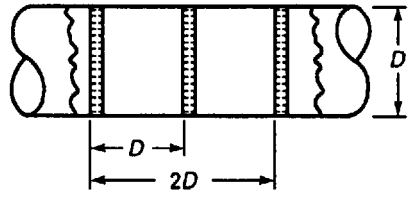

(e) Multi-Tube Type Equalizer and Straightener

FIG. 4.8 STRAIGHTENERS AND EQUALIZERS

Copyright ASME International
Provided by IHS under license with ASME
No reproduction or networking permitted without license from IHS Not for Resale

sure tap. Equilibrium should be verified as part of the measurement system operating procedures.

4.6.6 Velocity pressure shall be computed on the basis of average velocity. (See para. 5.4.3.)

4.6.7 Static pressure shall be taken as the arithmetic average of individual raw data observations from four stations, spaced 90 deg. in the same plane of the pipe. The diameter of the static hole shall not exceed four-tenths of the pipe wall thickness and it should not be greater than $\frac{1}{8}$ in. in normal circumstances. The hole shall be drilled smooth and free of burrs. A preferred connection is obtained by welding a coupling to the pipe and then drilling the hole. Total pressure probes may be used to measure pressure at the same stations the static measurements are made. Where the absolute values from four stations differ by more than one percent, the cause shall be determined and the condition corrected. See PTC 19.2 for further guidance.

4.6.8 Inlet pressure is the total pressure prevailing at the compressor inlet. It is the sum of the static pressure and the velocity pressure. Static pressure shall be measured as specified for inlet pipes in Figs. 4.1 or 4.3. Where no inlet pipe is used, as in Fig. 4.2, the inlet total pressure shall be measured by a barometer.

Total pressure may be directly measured by the use of total probes inserted into the flow stream (such probes shall be properly oriented or directionally compensated to insure proper measurement). The measurement obtained by a total pressure probe can be influenced to varying extent by spatial location. In the event of significant unresolved differences from the total pressure deduced from the static pressure and average velocity, the static-pressure-based result shall prevail.

4.6.9 Discharge pressure is the total pressure prevailing at the compressor discharge. It shall be taken as the sum of the static pressure and the velocity pressure. Static pressure shall be measured as illustrated in Fig. 4.1. When no discharge pipe is used, as illustrated in Fig. 4.4, the discharge static pressure shall be measured by a barometer. If the velocity pressure (based on discharge opening area) exceeds 5 percent of the static pressure, an open discharge shall not be used.

Total pressure may be directly measured by the use of total probes inserted into the flow stream (such probes shall be properly oriented or directionally compensated to insure proper measurement). The measurement obtained by a total pressure probe can be influenced to varying extent by spatial location. In the event of significant unresolved differences from the total pressure deduced from the static pressure and average velocity, the static-pressure-based result shall prevail.

4.6.10 Barometer readings and the temperature at the instrument shall be recorded at the beginning and end of each test point. The instrument shall be located at the site of the test. It shall be protected from weather, direct sunlight, and fluctuating temperature changes. Precautions shall be taken to prevent negative pressures in the vicinity of the barometer which may be caused by strong winds, compressor intakes, or ventilating fans. The instrument elevation with respect to the compressor shall be determined and proper corrections applied. See PTC 19.2 for further guidance.

4.6.11 Internal pressure measurements are required only if the sectional performance is defined for internal conditions (as an alternative the Code definition in para. 3.5.6). Due to the many configurations of the internal passages in sidestream compressors, this Code cannot specify precisely where or how internal pressure instrumentation may be placed. As a guide, four pressure probes (either static or dynamic) should be inserted in the mainstream flow. These probes should be located so the incoming sidestream does not affect the raw data (see Fig. 4.12). It is usually difficult to make accurate internal pressure measurements at a stage discharge since this is normally a region of high velocity with local variations of velocity, flow angle, and pressure. This measurement uncertainty should be reflected in the error analysis and in the value of the uncertainty assigned to these stations.

4.7 TEMPERATURE MEASUREMENTS

4.7.1 Reference should be made to PTC 19.3, Temperature Measurement, for guidance on instruments for temperature measurement. Temperature shall be measured by thermocouples or mercury-in-glass thermometers or other devices with equivalent accuracy. The range of their scales, the sensitivity, and the required accuracy shall be chosen for each of the significant measurements according to the particular need. The following general precautions are recommended when making any temperature measurement: the instrument installation should assure that thermal conductance by radiation, convec-

Copyright ASME International
Provided by IHS under license with ASME
No reproduction or networking permitted without license from IHS
Not for Resale

tion, and conduction between the temperature sensitive element and all external thermal bodies (pipe wall, external portions of thermometer wells and thermocouple, etc.) shall be negligible in comparison to the conductance between the sensor and the medium being measured. Insulation of those parts of thermometer well, thermocouple sheath, etc., that extend beyond the pipe outside diameter may be a means of accomplishing this objective if necessary. In some cases, insulation of the pipe wall near the thermometer or possibly insulation of the section of the pipe upstream of the thermometer may be necessary.

The temperature measuring device shall extend a sufficient distance into the fluid stream to minimize unavoidable conduction of heat. They need not be perpendicular to the wall. Oil or other heat conducting fluid should be used in thermowells to improve heat transfer.

Precaution shall be taken to avoid insertion of the temperature measuring device into a stagnant area when measuring the temperature of a flowing medium.

4.7.2 When selecting a liquid-in-glass thermometer there may be a need for an emergent stem correction. Refer to PTC 19.3 for further information.

4.7.3 Thermocouples shall have junctions silver brazed or welded. The selection of materials shall be suitable for the temperature and the gases being measured. Calibration shall be made with the complete assembly, including the instrument, the reference junction, and the lead wires. If the well is integral with the thermocouple, the well shall also be included in the calibration.

4.7.4 Thermometer wells shall be as small in diameter and with walls as thin as conditions will permit. Wells shall be evaluated for the conditions of anticipated use to determine the time lag and the corrections to be applied. Thermocouples should be welded to the bottom of a well to reduce or minimize the correction for well error.

4.7.5 Resistance temperature detectors or thermistors should be selected for the appropriate range. Caution should be taken because some of these devices have a relatively slow response time.

4.7.6 Total temperature is the sum of static temperature and velocity temperature. Where the Mach number is lower than 0.11 for gases, or for air where the velocity is below 125 ft/sec, the velocity temperature may be negligible. Normally, the actual temperature measured is a value between static and total temperature. The velocity temperature is then corrected for the recovery factor and added to the measured observation (see para. 5.4.4). Special temperature probes made to measure total temperature need little or no correction.

4.7.7 Inlet temperature is the total temperature prevailing at the compressor inlet. When the compressor is tested with an inlet pipe, four temperature taps shall be spaced 90 deg. apart and displaced 45 deg. from the static pressure sensors (see Figs. 4.1 or 4.3). When machines are assembled with an open inlet as in Fig. 4.2, inlet total temperature is the atmospheric temperature, and it shall be measured by four instruments attached to the protecting screen. In general, when the 4 (four) raw data observations differ by more than 0.5 percent of the absolute temperature the cause shall be determined and corrected. For low temperature rise machines uncertainty analysis should be used to determine acceptable limits. Variations of more that 0.5 percent caused by factors other than instrument error such as design may require more than 4 (four) measuring stations.

4.7.8 Discharge temperature is the total temperature prevailing at the compressor discharge. When a compressor is assembled for test with a discharge pipe, the instruments shall be located as shown in Figs. 4.1 or 4.5 and spaced 90 deg. apart and displaced 45 deg. from the pressure taps. Where the compressor is operated without a discharge pipe, four instruments shall be anchored to the discharge opening with a suitable projection into the gas stream.

When the four raw data observations differ by more than 0.5 percent of the absolute temperature, the cause shall be determined and corrected. Variation of more than 0.5 percent caused by factors other than instrument error such as design may require more than four measuring stations.

4.7.9 For sidestream compressors, due to the many possible configurations of internal passages, this Code can not specify where or how internal temperature instrumentation may be placed (see paras. 3.5.5 and 3.5.6). As a guide, four temperature probes should be inserted in the mainstream flow. These probes should be located so the incoming sidestream does not affect the raw data (see Fig. 4.12). It is usually difficult to make accurate internal temperature measurements at a stage discharge since this is normally a region of high velocity. This measurement

Copyright ASME International
Provided by IHS under license with ASME
No reproduction or networking permitted without license from IHS
Not for Resale

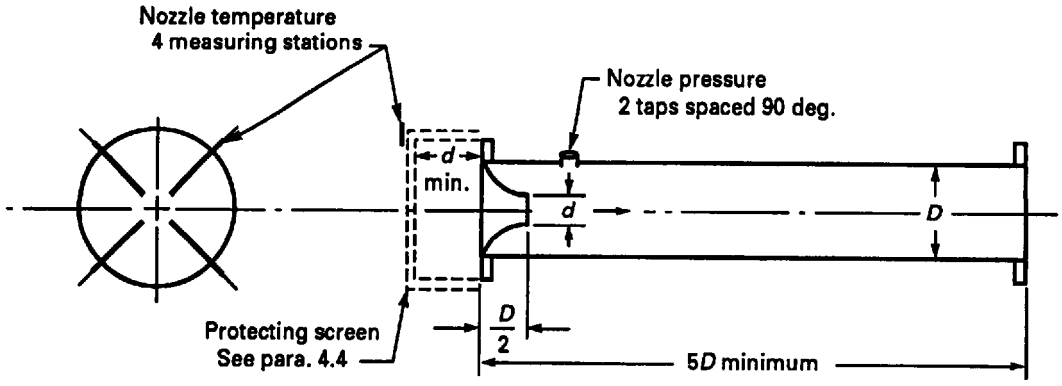

FIG. 4.9 INLET NOZZLE ON AN OPEN LOOP

uncertainty should be reflected in the uncertainty analysis and in the value of the uncertainty assigned to these stations. The internal temperature measurement is always required when sidestream and mainstream flows mix internally.

4.8 CAPACITY MEASUREMENTS

4.8.1 Flow may be measured by using an ASME flow nozzle, concentric square edge orifice, Herschel type venturi tube, or alternative devices of equal or better accuracy. Reference shall be made to PTC 19.5, Flow Measurement, for general instruction and detailed description of the various primary elements and their applications. Other references are provided in Appendix D. The interested parties shall mutually agree upon the type of metering device to be used and the choice shall be stated in the test report.

4.8.2 The flow measuring device may be located on either the inlet or discharge side of the compressor. It shall be used to determine the net capacity delivered, or in the case of an exhauster, the net capacity exhausted, which excludes losses by shaft leakage, balancing pistons, condensation, and other normal leakage that may be inherent in the compressor design. Multiple devices are required for multiple inlet or discharge flow sections.

4.8.3 The nozzle may be used with an open inlet. The nozzle arrangement shown in Fig. 4.9 may be used for the test of compressors as exhausters. The minimum length of straight pipe, following the nozzle, shall be equal to five times the pipe diameter, and the pipe diameter shall be a minimum of 1.66 times the nozzle throat diameter. A protecting screen shall be used in accordance with the instructions of para. 4.4. Upstream total pressure is equal to the barometer pressure. Differential pressure is measured from two static taps located ½D downstream of the nozzle flange. Temperature is measured by sensors at the screen.

4.8.4 The nozzle may be used with an open discharge: Figs. 4.10 and 4.11 show optional arrangements of the flow nozzle on the outlet end of a pipe for use where it is convenient to discharge the gas to atmosphere. For a subcritical flow, the nozzle differential pressure, Δ_p will be less than the barometric pressure and it shall be measured from impact tubes, as shown in Fig. 4.10. Where the available gas pressures permit, the nozzle may be sized for operation at critical flow. In this case the differential pressure will be greater than barometric pressure, and it shall be measured from static taps located 1D upstream of the nozzle as indicated in Fig. 4.11. In both cases the minimum length of straight pipe preceding the nozzle shall be 10D and the pipe diameter shall be a minimum of 1.66 times the nozzle throat diameter. Temperature measuring stations shall be located 6D upstream. The flow straightener and/or flow equalizer, as described in para. 4.5, shall be used. Users of these arrangements are cautioned to observe the distinction between critical and subcritical flow. It should be noted that the velocity of approach is included in measurements made with impact tubes.

4.8.5 Formulas for calculating mass flow for a variety of flow measuring devices as provided in PTC 19.5 shall be used. Methods are included for the determination of the discharge coefficient, fluid expansion factor, and metering element thermal expansion coefficient for various flow elements.

Copyright ASME International
Provided by IHS under license with ASME
No reproduction or networking permitted without license from IHS Not for Resale
STD·ASME PTC 10-ENGL 1997 ■ 075 0605460 025 ■

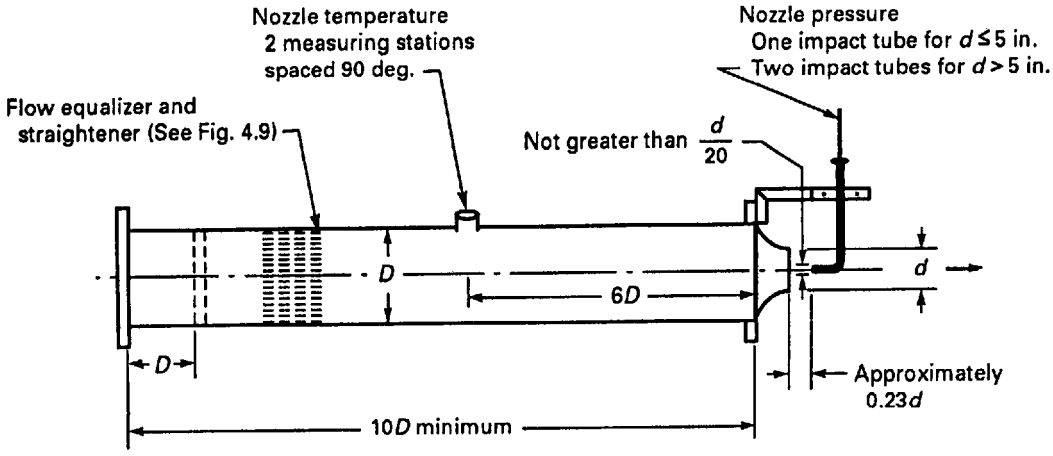

SPECIAL NOTE: d not more than $0.6D$ for any nozzle arrangement

FIG. 4.10 DISCHARGE NOZZLE ON AN OPEN LOOP, SUBCRITICAL FLOW

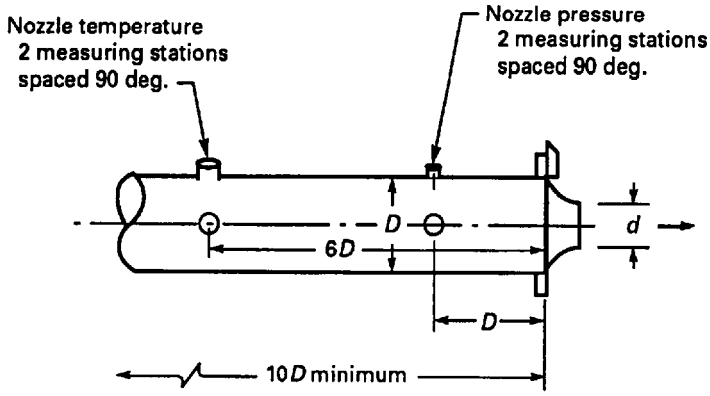

FIG. 4.11 DISCHARGE NOZZLE ON AN OPEN LOOP, CRITICAL FLOW

4.9 GAS COMPOSITION

4.9.1 The test gas must be defined. At the minimum, sampling will be taken at the start and end of each test.

4.9.2 Special precautions shall be taken when testing with the closed loop to eliminate all liquids from the gas stream and static instrument lines. When dealing with gas mixtures subject to variation, samples shall be taken at each test point and be analyzed by spectrographic, chromatographic, or chemical methods. The sample shall be taken from the piping such that there is no condensation before the compressor or the sampling points. This analysis shall consist of identification of the constituents, a measure of mole percent of each and evaluation of the molecular weight. If the test gas is air no samples are necessary. However, relative humidity or dewpoint shall be measured during each test point.

4.9.3 Note that while the gas under test conditions may not exhibit condensation, the gas in the instrument lines will be cooler (i.e., room temperature) and, under some conditions, condensation could occur.

Copyright ASME International
Provided by IHS under license with ASME
No reproduction or networking permitted without license from IHS
Not for Resale

4.10 SPEED MEASUREMENT

4.10.1 Instruments shall be selected to provide a continuous indication of speed fluctuation where variable speed drivers are used. Use of two independent instruments, one to provide a check on the other, is also recommended.

4.10.2 The speed of a compressor driven by synchronous motors may be determined from the number of poles in the motor and the frequency of the power systems. If gears are used between the measuring point and the compressor shaft, the speed ratio shall be computed from a count of the number of teeth.

4.10.3 Detailed instructions on speed measuring instrumentation is given in PTC 19.13, Measurement of Rotary Speed.

4.11 TIME MEASUREMENT

4.11.1 The date and time of day at which test readings are taken shall be recorded on all data records.

4.12 METHODS OF SHAFT POWER MEASUREMENT

4.12.1 The shaft power input at the compressor coupling or the drive shaft may be measured directly by:

(a) torque meters

(b) reaction mounted drivers

or evaluated from:

(c) measurement of electrical input to a driving motor

(d) a heat balance method

(e) heat input to a loop cooler

4.12.2 The precautions, limitations, and the permissible applications for each of these methods are described separately. Code users shall select the method best suited for the application. Detailed instruction on the measurement of shaft power will be found in PTC 19.7, Measurement of Shaft Power.

4.13 SHAFT POWER BY TORQUE MEASUREMENTS

4.13.1 Torque may be directly measured by devices installed in a drive shaft interposed between the driver and the compressor. For tests under this Code, torque meters shall be of a type suitable for calibration. The torsion member shall be selected for readability and accuracy at the speed and load prevailing during test.

4.14 SHAFT POWER BY ELECTRICAL MEASUREMENTS

4.14.1 The shaft power input to a motor driven compressor may be computed from measurements of the electrical input to the motor terminals under certain conditions. The power requirement of the compressor should be above mid-point of the motor rating. The output of a motor shall be calculated by subtracting losses from the measured electrical input, or as the product of input and efficiency. Efficiency shall be determined by an input-output test where output is measured on a calibrated dynamometer or other appropriate device. For efficiency determination, the supply line voltage used for calibration shall be the same as that used for the compressor test.

4.14.2 Efficiency determination by input-output measurements may not be practical for large motors. For large motors the loss method may be used. The segregated losses of an induction motor shall include friction and windage, core loss, I^2R loss of the rotor and the stator, and a load loss. These measurements shall be made in accordance with current ANSI standards.

4.14.3 The electric power input to the motor shall be measured by the instruments connected at the motor terminals. The detailed instructions for the measurement of electrical power are as given in IEEE 120.

The indicating electric meters should be selected to read above one-third of the scale range.

4.14.4 Calculations of electrical power shall include calibration corrections for the meter and current transformers. The transformers shall be measured for ratio and phase angle at the load conditions prevailing during the test.

4.15 SHAFT POWER BY HEAT BALANCE MEASUREMENTS

4.15.1 When it is not possible or practical to measure shaft power by direct means, it may be computed from measured values of the capacity, gas properties at inlet and discharge, heat exchange

Copyright ASME International
Provided by IHS under license with ASME
No reproduction or networking permitted without license from IHS
Not for Resale

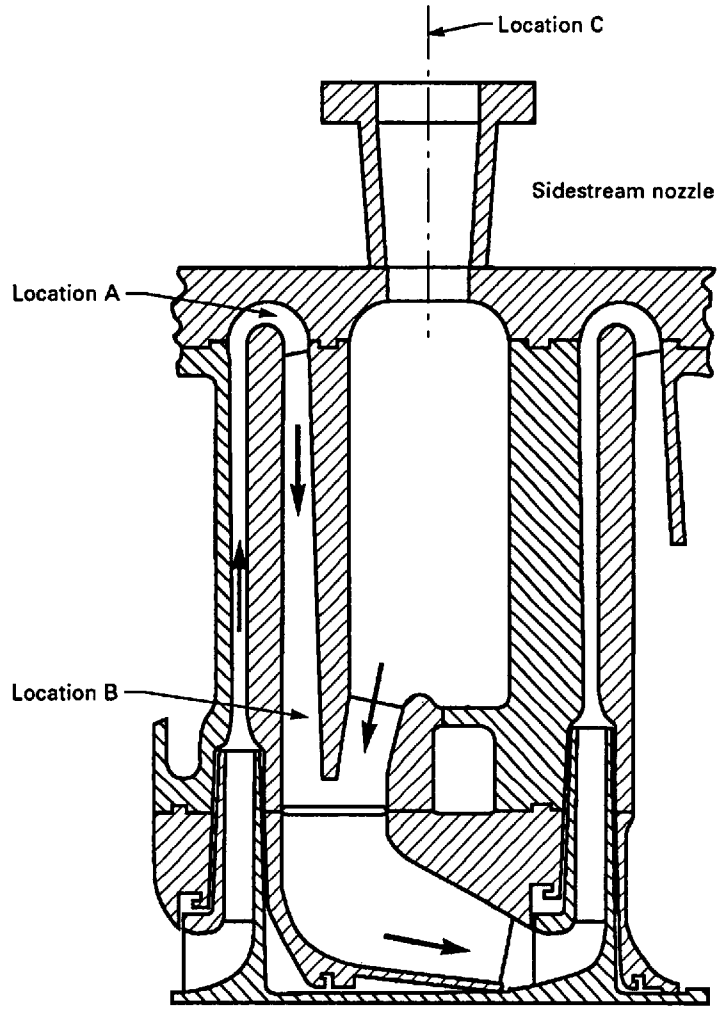

GENERAL NOTE: Mainstream instrumentation to be located between stations A and B.

FIG. 4.12 TYPICAL SIDESTREAM INLET AREA

through the casing, mechanical losses, and gas leakage loss from the shaft seals.

4.15.2 Methods to account for mechanical losses are discussed in para. 4.18. External heat loss from the casing may be evaluated in accordance with para. 4.17.

4.15.3 The heat balance method shall be used with the following precautions and limitations.

(a) The inlet and discharge temperatures shall be measured with instruments suitably selected and applied to provide combined accuracy within 1 percent of the temperature rise. When the rise is less than 50°F, consideration should be given to direct measurement of the temperature rise (such as with differential thermocouples). Evidence of nonuniform temperature distribution more than 2 percent of the temperature rise at either the inlet or the discharge measurement station, may require one of the following procedures be used at the offending measurement station:

(1) Apply insulation to the piping upstream of the temperature measurement station in an effort to minimize thermal gradient. If successful, the temperature measurement installation need not be changed.

(2) Move the temperature measurement station away from the compressor and add pipe insulation. This might be particularly effective when temperature

Copyright ASME International
Provided by IHS under license with ASME
No reproduction or networking permitted without license from IHS
Not for Resale

stratification causes the problem at a compressor discharge.

(3) Perform a temperature traverse using 10 locations along each of two diametral traverse lines spaced 90 deg. apart at the same pipe cross section. The 10 sensing locations along each traverse line should correspond closely to the average radii of five annular regions of equal area which comprise the entire pipe cross section. (The central region actually would be a circular rather than annular area.) The measured temperature would be the average of the 20 individual measurements.

(b) In sidestream machines, where internal temperature measurements are to be made, ideally four locations should be used. However, this may not prove to be practical. In all cases, the upstream temperatures of the two streams mixing internally should be measured. A measurement of the downstream mixed temperature would be unreliable and should not be used for calculation purposes due to inherent poor internal mixing conditions in a machine.

(c) Temperature equilibrium shall be established before starting the test reading. Acceptable equilibrium will be demonstrated by six or more readings, uniformly timed, for a period not less than 10 minutes, during which the temperature rise drift does not exceed 5 percent of the temperature rise.

(d) The heat losses due to radiation and convection expressed in percent of total shaft power shall not exceed 5 percent. (See para. 4.17.)

(e) The inlet gas conditions shall have a minimum of 5 deg. superheat for Type 2 tests.

4.16 SHAFT POWER BY HEAT EXCHANGER METHODS

4.16.1 When it is not possible or practical to measure shaft power directly or by a compressor heat balance, and a heat exchanger is incorporated in the test arrangement, the heat transferred to the cooling water may be used to determine the net compressor shaft power.

4.16.2 Methods to account for the mechanical losses are discussed in para. 4.18. External heat loss from the casing, piping, and cooler may be evaluated in accordance with para. 4.17.

4.16.3 The heat exchanger method shall be used with the following precautions and limitations.

(a) The cooling fluid supply shall be stable in pressure and temperature so that the fluctuation of flow rates will not deviate more than 2 percent and the fluctuation of the temperature rise by not more than 1 percent of the temperature rise.

(b) The cooling fluid flow meter shall be selected and calibrated to maintain the uncertainty limit within 1/2 percent at test conditions.

(c) The cooling fluid flow rate shall be regulated so that the temperature rise is not less than 20°F.

(d) Two or more temperature measuring devices shall be used at each cooling fluid inlet and outlet.

(e) Spinners or similar devices shall be used to insure thorough mixing of the outlet stream prior to temperature measurement.

(f) The heat losses due to radiation and convection from the gas loop piping, the compressor, and the cooler shall not exceed 5 percent of the total shaft power. It is recommended that the piping between the compressor discharge flange and the cooler inlet be insulated.

(g) Temperature equilibrium shall be established before starting the test reading. Acceptable equilibrium will be demonstrated by six or more readings, uniformly timed, for a period not less than 10 minutes, during which the temperature rise drift does not exceed 5 percent of the temperature rise.

4.17 HEAT LOSS

4.17.1 When using either the heat balance or heat exchanger method for determining power, it is recommended that heat loss be minimized by the application of a suitable insulating material. If the compressed gas temperature rise is less than 50°F, the inlet piping, compressor casing, and exit piping shall be insulated at least to the measuring station. The external heat loss from the compressor casing and connecting piping may be computed with acceptable accuracy from measurements of the exposed surface area, the average temperature of the surface, and the ambient temperature. Where a hot surface temperature varies widely, as in large multistage compressors, it is advisable to divide the casing into arbitrary sections and determine the area and temperature of each separately, and thus obtain an approximate integrated average temperature for the total surface.

4.17.2 Where cooling occurs between the inlet and outlet measuring stations as part of the compressor design, measurement of temperatures and flow rates of the cooling fluids are required. Examples are compressors incorporating cooled diaphragms, interstage coolers, or aftercoolers as part of the compressor package being tested.

Copyright ASME International
Provided by IHS under license with ASME
No reproduction or networking permitted without license from IHS
Not for Resale

4.18 MECHANICAL LOSSES

4.18.1 When practical, the heat equivalent of the mechanical losses (integral gears, bearings, and seals) shall be determined from the temperature rise of the cooling fluid. The quantity of fluid flowing shall be determined by calibrated flow meters. The heat equivalent of the external losses as well as the frictional loss in the mechanical seals, if used, shall be determined and included in the total mechanical losses.

Where the mechanical losses are well known and documented, the calculated values or those values determined from prior testing may be used by agreement by test parties.

4.18.2 Where speed changing gears (not part of the compressor) are used between a driver and a compressor, and shaft power is measured on the input side of the gear, it will be necessary to subtract the friction and windage loss of the gear to obtain the shaft power input to the compressor. The gear power loss to the lubricating fluid may be determined by measuring the flow rate and the temperature rise. The additional external loss to the atmosphere may be determined by the methods of para. 4.17. When gear loss measurements are made on an independent gear test, care should be taken to assure that the load, lubricating oil temperature, viscosity, and flow rates are similar to those for the compressor test.

4.19 INSTRUMENT CALIBRATION

4.19.1 All instruments used for measurement shall be currently certified by comparison with appropriate standards before the test. Those instruments subject to change in calibrations due to use, handling, or exposure to injurious conditions, shall be compared again with standards after the test.

4.19.2 Pressure measurement devices (Bourdon tube gages and transducers, etc.) shall be calibrated with a deadweight standard or manometer at approximately 5 percent intervals for the anticipated measurement range.

Instruments affected by temperature shall be calibrated in the same temperature range prevailing during their use.

4.19.3 Temperature measurement devices (thermocouples, mercury-in-glass thermometers, RTDs, thermisters, etc.) shall be calibrated with certified standards at 20 percent intervals for the measurement range. The standard shall be suitable for the measurement range of the instruments to be calibrated. Procedures described in PTC 19.3, Temperature Measurement, shall be followed for checking the accuracy of temperature measuring instruments. Thermocouple calibration checks shall include the hot junction, the lead wires, and the indicating instrument. RTDs and thermisters shall be calibrated with the total system.

4.19.4 Instruments for measuring electric power such as wattmeters, ammeters, and voltmeters shall be calibrated with primary standards. The zero adjustments shall be checked. They shall be examined for pivot friction. Instruments showing pivot friction shall not be used. Dynamometer types may be calibrated on either ac or dc current. Current transformers shall be measured for transformation ratio and phase angle at the range of burdens prevailing in the circuit during the test. The transformation ratio of potential transformers shall be measured at the approximate primary voltage and frequency prevailing during the test.

4.19.5 Torque meters shall be calibrated by applying torque with certified standard weights, load cells, or other appropriate devices spaced to cover the working range. For strain gage types, the calibration shall include the brushes, lead wires, and the indicating instrument.

Copyright ASME International
Provided by IHS under license with ASME
No reproduction or networking permitted without license from IHS Not for Resale

STD.ASME PTC 10-ENGL 1997 ■ 0759670 0605466 543 ■

SECTION 5 — COMPUTATION OF RESULTS

5.1 FORMAT

5.1.1 The Calculation Procedure. The process of establishing compressor performance from test data involves a number of calculation steps. This Section is presented in the following chronological order:

- Perfect or real gas treatment is selected.
- The appropriate test speed is calculated if a Type 2 test is to be performed.
- The raw test data is processed.
- Test performance is calculated.
- Test performance is expressed in dimensionless form.
- Reynolds number correction is applied.
- The corrected dimensionless expressions are used to predict performance at specified operating conditions.

The important subject of uncertainty is treated separately. The section format is intended to guide the user in basic calculation procedure and to present the necessary equations. Appendix E is provided as a background theory source and further explanation of the equations.

5.2 COMPUTATIONAL METHODS FOR IDEAL AND REAL GASES

5.2.1 Choice of Methods. The test and specified gases may be treated as either perfect or real depending upon their respective thermodynamic behavior. For the purposes of this Code ideal gases are those which fall within the limits of Table 3.3. Gases which exhibit deviations beyond these limits are considered real. Three distinct treatments of gases are recognized in the computational procedures. The appropriate choice will depend upon the selected gas, knowledge of its properties, and the desired accuracy.

5.2.1.1 Ideal Gas Method. The gas may be treated as an ideal gas when its properties satisfy the limits imposed in Table 3.3. The table limits are defined so that the use of ideal gas laws will introduce maximum uncertainty of approximately one percent in efficiency and two percent in discharge specific volume. The ideal gas equation of state, $144pv = RT$, and the corresponding derived equations in Tables 5.1 and 5.4 may be used.

For gases with variable specific heats, average properties are calculated at the arithmetic mean section temperature.

5.2.1.2 Schultz Method. The gas may be treated as a real gas using the method of Schultz [see Ref. (D.13)] when the compressibility functions are known. The real gas equation of state, $144pv = ZRT$, and the corresponding derived equations of Tables 5.2 to 5.4 are used. The arithmetic mean between inlet and discharge conditions shall be used for evaluating compressibility, specific heat, X and Y. The Schultz method is normally used when the discharge conditions are unknown and an estimate of the polytropic exponent, n, is needed. Iteration is required to obtain the arithmetic mean conditions.

The curves provided for X (Fig. 3.6) and Y (Fig. 3.7) are for reference. They were derived from the generalized compressibility charts. Specific values of X and Y may be developed for any test or specified gas composition.

5.2.1.3 Tabulated Properties and Equation of State Methods. Pure gases and gas mixtures for which tabulated data properties exist may be treated as real gases.

There are many gas property correlation equations of state for pure components and gas mixtures. Many of the generalized equations of state provide sufficiently accurate predictions of gas properties to be used in conjunction with the calculation methods.

The use of either of these methods will require iterative procedures to satisfy the equations in Tables 5.2 to 5.4.

5.3 TYPE 2 TEST GAS SPEED SELECTION

5.3.1 Test Gas Selection. The gas to be used in establishing the performance of the compressor to be tested can be the specified operating gas or a

Copyright ASME International
Provided by IHS under license with ASME
No reproduction or networking permitted without license from IHS
Not for Resale

TABLE 5.1
IDEAL GAS DIMENSIONLESS PARAMETERS

Parameter	Mathematical Description at Test Operating Conditions	Eq. No.	Assumption
Flow coefficient	$\phi_t = \left[\frac{w_{rotor}}{\rho_i 2\ \pi N \left(\frac{D}{12}\right)^3}\right]_t$	[5.1T-1]	$\phi_{sp} = \phi_t$
Work input coefficient	$[\mu_{in}]_t = \left[\frac{h_d - h_i}{\frac{1}{g_c}\Sigma U^2}\right]_t J$	[5.1T-2]	$[\mu_{in}]_{sp} = [\mu_{in}]_t$
Isentropic work coefficient	$[\mu_s]_t = \left[\frac{W_s}{\frac{1}{g_c}\Sigma U^2}\right]_t = \left[\frac{\frac{k}{k-1} RT_i}{\frac{1}{g_c}\Sigma U^2}\right]_t \left[\left(\frac{p_d}{p_i}\right)^{\frac{k-1}{k}} - 1\right]_t$	[5.1 -3]	$[\mu_s]_{sp} = [\mu_s]_t \text{ Rem}_{corr}$
Polytropic work coefficient	$[\mu_p]_t = \left[\frac{W_p}{\frac{1}{g_c}\Sigma U^2}\right]_t = \left[\frac{\frac{n}{(n-1)} RT_i}{\frac{1}{g_c}\Sigma U^2}\right]_t \left[\left(\frac{p_d}{p_i}\right)^{\frac{n-1}{n}} - 1\right]_t$	[5.1T-4]	$[\mu_p]_{sp} = [\mu_p]_t \text{ Rem}_{corr}$
	where $n_t = \left[\frac{\ln \frac{p_d}{p_i}}{\ln \frac{p_d T_i}{p_i T_d}}\right]_t$	[5.1T-5]	
Isentropic efficiency	$[\eta_s]_t = \left[\frac{\frac{W_s}{J}}{h_d - h_i}\right]_t = \left[\frac{\frac{k}{k-1} RT_i}{h_d - h_i}\left(\frac{p_d}{p_i}\right)^{\frac{k-1}{k}} - 1\right]_t$	[5.1T-6]	$[\eta_s]_{sp} = [\eta_s]_t \text{ Rem}_{corr}$
Polytropic efficiency	$[\eta_p]_t = \left[\frac{\frac{W_p}{J}}{h_d - h_i}\right]_t = \left[\frac{\frac{n}{n-1} RT_i}{h_d - h_i}\left(\frac{p_d}{p_i}\right)^{\frac{n-1}{k}} - 1\right]_t$	[5.1T-7]	$[\eta_p]_{sp} = [\eta_p]_t \text{ Rem}_{corr}$
Total work input coefficient	See Table 5.3		
For ideal gases with constant specific heats	$\eta_s]_t = \left[\frac{T_i}{T_d - T_i}\left(\frac{p_d}{p_i}\right)^{\frac{k-1}{k}} - 1\right]_t$	[5.1T-8]	
and,	$[\eta_p]_t = \left[\frac{\frac{k-1}{k}}{\frac{n-1}{n}}\right]_t$	[5.1T-9]	

GENERAL NOTE: Appropriate units must be chosen to render the parameters dimensionless. Further explanation of the equations is available in Appendix E.

Copyright ASME International
Provided by IHS under license with ASME
No reproduction or networking permitted without license from IHS
Not for Resale

TABLE 5.2
REAL GAS DIMENSIONLESS PARAMETERS

Parameter	Mathematical Description at Test Operating Conditions	Eq. No.	Assumption
Flow coefficient	$\phi_t = \left[\frac{w_{rotor}}{\rho_i 2\ \pi N \left(\frac{D}{12}\right)^3}\right]_t$	[5.2T-1]	$\phi_{sp} = \phi_t$
Work input coefficient	$[\mu_{in}]_t = \left[\frac{(h_d - h_i)\ J}{\frac{1}{g_c}\Sigma U^2}\right]_t$	[5.2T-2]	$[\mu_{in}]_{sp} = [\mu_{in}]_t$
Isentropic work coefficient	$[\mu_s]_t = \left[\frac{W_s}{\frac{1}{g_c}\Sigma U^2}\right]_t = \left[\frac{\frac{n}{n-1} f144 p_i v_i}{\frac{1}{g_c}\Sigma U^2}\left(\frac{p_d}{p_i}\right)^{\frac{n_s-1}{n_s}} - 1\right]_t$	[5.2 -3]	$[\mu_s]_{sp} = [\mu_s]_t\ \mathrm{Rem}_{corr}$
	where $[n_s]_t = \left[\frac{\ln \frac{p_d}{p_i}}{\ln \frac{v_i}{v_d}}\right]_t$	[5.2T-4]	
	and $f_t = \left[\frac{(h'_d - h_i)\ J}{\frac{n_s}{(n_s - 1)}}\ 144\ (p_d v'_d - p_i v_i)\right]_t$	[5.2T-5]	
Polytropic work coefficient	$[\mu_p]_t = \left[\frac{W_p}{\frac{1}{g_c}\Sigma U^2}\right]_t = \left[\frac{\frac{n}{(n-1)} f144}{\frac{1}{g_c}\Sigma U^2}(p_d v_d - p_i v_i)\right]_t =$		
	$= \left[\frac{\frac{n}{(n-1)} f144 p_i v_i}{\frac{1}{g_c}\Sigma U^2}\left(\frac{p_d}{p_i}\right)^{\frac{n-1}{n}} - 1\right]_t$	[5.2T-6]	$[\mu_p]_{sp} = [\mu_p]_t\ \mathrm{Rem}_{corr}$
	where $n_t = \left[\frac{\ln \frac{p_d}{p_i}}{\ln \frac{v_i}{v_d}}\right]_t$	[5.2T-7]	
Isentropic efficiency	$[\eta_s]_t = \left[\frac{\frac{W_s}{J}}{(h_d - h_i)}\right]_t = \left[\frac{\frac{n_s}{(n_s - 1)} f144 p_i v_i}{h_d - h_i}\left(\frac{p_d}{p_i}\right)^{\frac{n_s-1}{n_s}} - 1\right]_t$	[5.2T-8]	$[\eta_s]_{sp} = [\eta_s]_t\ \mathrm{Rem}_{corr}$

[Table continued on next page]

Copyright ASME International
Provided by IHS under license with ASME
No reproduction or networking permitted without license from IHS
Not for Resale

TABLE 5.2 (CONT'D)
REAL GAS DIMENSIONLESS PARAMETERS

Parameter	Mathematical Description at Test Operating Conditions	Eq. No.	Assumption
Polytropic efficiency	$[\eta_p]_t = \left[\frac{\frac{W_p}{J}}{h_d - h_i}\right]_t = \left[\frac{\frac{n}{n-1} f144}{(h_d - h_i) J}(p_d v_d - p_i v_i)\right]_t =$ $= \left[\frac{\frac{n}{n-1} f144 p_i v_i}{(h_d - h_i) J}\left(\frac{p_d}{p_i}\right)^{\frac{n-1}{n}} - 1\right]_t$	[5.2T-9]	$[\eta_p]_{sp} = [\eta_p]_t \, Rem_{corr}$
Total work input coefficient	See Table 5.3		

GENERAL NOTE: Appropriate units must be chosen to render the parameters dimensionless. Further explanation of the equations is available in Appendix E.

gas which allows for similarity testing at equivalent conditions.

5.3.2 Test Speed Selection. The volume ratio limitation of Table 3.2 may be met by controlling the test speed. The appropriate test speed is calculated from

$$\frac{(N_t)}{(N_{sp})} = \sqrt{\frac{W_{p_t} Rem_{corr}}{W_{p_{sp}}}} \qquad [5.3.1]$$

where

$$W_{p_t} = \left(\frac{n}{n-1} f Z_i R T_i \left[\left(\frac{p_d}{p_i}\right)^{\frac{n-1}{n}} - 1\right]\right)_t \qquad [5.3.2]$$

and,

$$W_{p_{sp}} = \left(\frac{n}{n-1} f Z_i R T_i \left[\left(\frac{p_d}{p_i}\right)^{\frac{n-1}{n}} - 1\right]\right)_{sp} \qquad [5.3.3]$$

with the restriction that,

$$[r_v]_t = [r_v]_{sp} \qquad [5.3.4]$$

i.e.,

$$\left[\left(\frac{p_d}{p_i}\right)^{\frac{1}{n}}\right]_t = \left[\left(\frac{p_d}{p_i}\right)^{\frac{1}{n}}\right]_{sp} \qquad [5.3.5]$$

The Machine Reynolds number correction, Rem_{corr}, is explained in para. 5.6.3.

In order to apply these equations it is necessary to know the polytropic exponent, which is a function of polytropic efficiency.

For any gas,

$$n = \frac{\left(\ln \frac{p_d}{p_i}\right)}{\left(\ln \frac{v_i}{v_d}\right)} \qquad [5.3.6]$$

For an ideal gas,

$$\frac{n}{n-1} = \eta_p \frac{k}{k-1} \qquad [5.3.7]$$

For a real gas using the Schultz method,

$$n = \frac{1}{Y - m(1 + X)} \qquad [5.3.8]$$

Copyright ASME International
Provided by IHS under license with ASME
No reproduction or networking permitted without license from IHS
Not for Resale

where

$$m = \frac{ZR}{C_p}\left(\frac{1}{\eta_p} + X\right) \qquad [5.3.9]$$

Both the test and specified operating condition efficiencies are known only approximately before the test. Where no better approximation is available, they may be estimated from the design value,

$$\eta_{p_{sp}} \simeq \eta_{p_{des}} \qquad \eta_{p_t} \simeq \frac{\eta_{p_{des}}}{\text{Rem}_{\text{corr}}}$$

5.3.3 Test Speed Validation. When the actual test conditions differ from the estimated values, the most appropriate test speed will depart from the previously calculated test speed. Some deviation is allowable. The test speed is acceptable when the deviation satisfies the limits of Table 3.2.

5.4 CALCULATIONS FOR TEST OPERATING CONDITIONS

Performance at the test conditions is calculated by the following procedures.

5.4.1 Raw Data Acceptability. The observed data shall be checked for compliance with the limitations imposed in Sections 3 and 4. See PTC 19.1 for guidance on examining data for outliers.

5.4.2 Processing Raw Data. Acceptable raw data shall be processed to provide values to be used in the computation of results.

5.4.2.1 Calibrations and Corrections. Applicable instrument and system calibrations shall be applied to the raw data. The need for corrections and calibrations arises from both the indicating system components and measurement technique. Raw data shall be corrected as required based on:

(a) instrument and instrument system calibrations
(b) liquid legs in pressure measurement lines
(c) temperature effects
(d) thermometer emergent stem corrections
(e) local gravitational variation

5.4.2.2 Data Conversion. The corrected raw data is then averaged from the total number of observations (raw data) at each measurement station. This averaged data becomes the reading. The reading is then converted to absolute units of pressure, temperature, etc.

5.4.2.3 Fluctuation. Three or more readings are used to obtain the test point. The allowable fluctuation of the readings is shown in Table 3.4. The fluctuation is computed by taking the differences of the highest reading and the lowest reading and dividing by the average of all the readings.

$$\Delta F = \frac{100\,(A_H - A_L)}{\frac{1}{n}\sum_{i=1}^{n} A_i} \qquad [5.4.1]$$

where

ΔF = fluctuation expressed in % (Table 3.4)
A_H = highest reading
A_L = lowest reading
A_i = i^{th} reading
n = total number of readings

If the fluctuation values of Table 3.4 are satisfied, then the point is assumed to be valid.

5.4.2.4 Test Point Data. The individual readings are summed and divided by the total number of readings to establish an average. This average is then used as the test point data.

5.4.2.5 Total Conditions. Gas state static test point data shall be converted to total condition values for the computational procedure. This does not preclude final presentation in terms of static conditions, but total values are used in the intermediate computations.

The relationship between static and total properties is velocity dependent. Average total properties are estimated herein from the average velocity at the measurement station.

The average velocity at the measurement station is given by

$$V = \frac{\frac{w}{60}}{\rho_{\text{static}}\, A}$$

Simplified methods for converting between static and total conditions at low Fluid Mach numbers are presented in the following paragraphs. A refined method for higher Mach numbers is given in Appendix G. The Fluid Mach number for ideal gases is given by

Copyright ASME International
Provided by IHS under license with ASME
No reproduction or networking permitted without license from IHS
Not for Resale

$$M = \frac{V}{\sqrt{g_c K R T_{static}}}$$

5.4.3 Test Pressure

5.4.3.1 Simplified Method. For measurement station Fluid Mach numbers of 0.2 or less the effects of compressibility are small. A good approximation of velocity pressure may be obtained by assuming incompressible flow at the measurement station and calculating an approximate density from the measured static pressure and measured temperature.

Thus

$$\rho = 144\ P_{static}/ZRT_{meas} \qquad [5.4.2]$$

$$V_{av} = w/60\rho A \qquad [5.4.3]$$

$$p = p_{static} + \frac{\rho V_{avg}^2}{2\ (144)\ g_c} \qquad [5.4.4]$$

5.4.3.2 Refined Method. For cases where the measurement station Fluid Mach number exceeds 0.2, or when a better average velocity estimate is desirable, the refined method of Appendix G may be used. This method is based upon the assumption of uniform compressible flow at the measurement station.

5.4.4 Test Temperature

5.4.4.1 Recovery Factor. The temperature indicated by a sensing element is normally a value somewhere between the static and total temperature, depending upon the ability of the sensor to recover the converted kinetic energy of the gas stream. This ability is defined in terms of a recovery factor,

$$r_f = \frac{T_{meas} - T_{static}}{T - T_{static}} \qquad [5.4.5]$$

The recovery factor is primarily dependent upon geometric configuration, orientation, and Fluid Mach number. Standardized Performance Test Code wells (PTC 19.3) used at velocities below 300 ft/sec have a recovery factor for air equal to 0.65. Recovery factors for various sensors may be available from the instrument manufacturer.

The test total temperature is calculated from the measured temperature taking into account the effect of recovery factor.

5.4.4.2 Simplified Method. The difference between total and static temperatures may be evaluated from

$$T - T_{static} = \frac{V_{avg}^2}{(2Jg_c c_p)} \qquad [5.4.6]$$

This equation is accurate for ideal gases (using an average c_p). It is less accurate for real gases and should be used with caution for real gases for Fluid Mach numbers above 0.2 (see Appendix G).

The above equation and the definition of recovery factor r_f combine to give

$$T = T_{meas} + [1 - r_f]\left[\frac{V_{avg}^2}{(2Jg_c c_p)}\right] \qquad [5.4.7]$$

5.4.4.3 Refined Method. For cases where the measurement station Fluid Mach number exceeds 0.2 for a real gas, the discussion in Appendix G gives guidelines for more accurate methods for relating total temperature to measured temperature. For cases involving extreme variation from ideal gas behavior, such as near the critical point, the total temperature may differ greatly from the value indicated by para. 5.4.4.1 and the methods outlined in Appendix G should be used.

5.4.4.4 Test Discharge Temperature From Shaft Power. An alternative method for determining test discharge temperature is discussed in para. 5.4.7.6.

5.4.5 Test Density and Specific Volume. The test total density is calculated from the test total pressure and total temperature as

$$\rho_t = \left[\frac{(144\ p)}{RT}\right]_t \qquad [5.4.8]$$

for ideal gases, and,

$$\rho_t = \left[\frac{(144\ p)}{ZRT}\right]_t \qquad [5.4.9]$$

for real gases.

The test total specific volume is the reciprocal of the total density

Copyright ASME International
Provided by IHS under license with ASME
No reproduction or networking permitted without license from IHS
Not for Resale

$$v_t = \frac{1}{\rho_t} \quad [5.4.10]$$

5.4.6 Test Flow Rate. The measured flow rate is calculated according to the formulas applicable to the indicating instrument used. In some cases secondary flows such as leakages may be wholly calculated rather than measured when mutually acceptable methods are available.

5.4.6.1 Mass Flow Rate. Test flow rates are expressed as mass rate of flow at the station of interest.

5.4.6.2 Volume Flow Rate. This Code uses a flow rate definition in the calculation process which has the units of volume flow rate. It is

$$q = \frac{w}{\rho} \quad [5.4.11]$$

where

w = mass flow rate
ρ = total density

This definition is consistent with the use of total properties in the calculation procedure. It does not represent the actual local volume flow rate because it is based upon total rather than static density. All references to calculated volume flow rate imply this definition unless otherwise stated.

5.4.7 Test Power. The calculation of test power depends upon the method of measurement. Both shaft power and gas power may be of interest. Shaft power is the power input to the compressor drive shaft. Gas power is the power delivered to the gas in the section(s) of interest.

5.4.7.1 Shaft Power Methods. When power input is measured by instruments such as a torque meter, dynamometer, or calibrated motor, the shaft power is calculated using the appropriate formula. Gas power is calculated by subtracting the parasitic losses from the shaft power (see para. 5.4.7.5 for parasitic losses).

$$P_{sh_t} = \text{measured value}$$

$$P_{g_t} = P_{sh_t} - P_{\text{parasitic}_t} \quad [5.4.12]$$

5.4.7.2 Heat Balance Method. Gas power is calculated from the First Law of Thermodynamics applied to the compressor section of interest, yielding

$$P_{g_t} = [\Sigma_{\text{out}} wh - \Sigma_{\text{in}} wh + Q_r] \frac{J}{33000} \quad [5.4.13]$$

where

$$[\Sigma_{\text{out}} wh - \Sigma_{\text{in}} wh]$$

indicates the sum of mass flow rate-enthalpy products for all flows crossing the section boundaries.

Q_r is the heat transfer from the section boundaries.

Shaft power is the sum of gas power plus any parasitic losses,

$$P_{sh_t} = P_{g_t} + P_{\text{parasitic}_t} \quad [5.4.14]$$

5.4.7.3 Heat Exchanger Method. Closed loop heat input tests are a form of the heat balance method. The gas power is given by,

$$P_{g_t} = [w_w c_{p_w} (t_2 - t_1) + Q_r + Q_{\text{ext}}] \frac{J}{33000} \quad [5.4.15]$$

where

w_w = cooling fluid mass rate of flow
c_{p_w} = cooling fluid specific heat
t_2 = cooling fluid outlet temperature
t_1 = cooling fluid inlet temperature
Q_r = heat transfer from the section boundaries
Q_{ext} = other external heat loss equivalent, for example, seal leakage

5.4.7.4 Casing Heat Transfer. The external heat loss or gain from the section may be computed from measurements of the exposed surface area, the average temperature of the surface, and the ambient temperature from

$$Q_r = [S_c(t_c - t_a)\, h_r] \frac{1}{60} \quad [5.4.16]$$

where

S_c = heat transfer surface area of exposed compressor and adjoining pipe for section of interest
t_c = casing surface temperature
t_a = ambient temperature
h_r = coefficient of heat transfer for area (combined convection and radiation)

Where the casing surface temperature varies widely, the accuracy of this calculation may be improved by treating small areas of the surface

Copyright ASME International
Provided by IHS under license with ASME
No reproduction or networking permitted without license from IHS
Not for Resale

separately and summing the results. See paras. 4.15, 4.16, and 4.17.

5.4.7.5 Parasitic Losses. Parasitic losses are the difference between shaft power and gas power for the section(s) of interest. They are comprised of mechanical losses and other power requirements which do not contribute to the energy rise of the gas in the section of interest,

$$P_{\text{parasitic}} = P_{\text{mech}} = P_{\text{other}} \qquad [5.4.17]$$

(a) Mechanical Losses. Mechanical losses are always considered to be parasitic losses. Those losses due to lubricated gears, bearings, seals, etc., may be estimated from the lubricating oil temperature rise. Other mechanical losses from seals, bearing, etc., which do not contribute to the lubricating oil temperature rise shall be determined separately. That portion of the mechanical loss evident in the lubricating oil temperature rise is given by:

$$P_{\text{mech}} = [wc_p\Delta t]\frac{J}{33000} \qquad [5.4.18]$$

where

w = mass flow rate of the lubricating or sealing fluid

c_p = specific heat of the lubricating or sealing fluid

Δ_t = temperature rise of the lubricating or sealing fluid

(b) Other Parasitic Losses. When the shaft power method is used, power supplied to drive auxiliary equipment is treated as parasitic. Also, power supplied to sections of a multisection compressor other than the section being tested is considered parasitic.

When the heat balance method is used, and total shaft power is defined to include power to drive auxiliary equipment, the auxiliary power requirement is treated as parasitic.

5.4.7.6 Alternate Method For Determining Test Discharge Temperature. For cases where the discharge temperature cannot be measured with sufficient accuracy, it may be possible to obtain a value from the measured shaft power.

The method is as follows:

(a) Calculate gas power from the shaft power measurement

$$P_g = P_{sh} - P_{\text{parasitic}} \qquad [5.4.19]$$

(b) Calculate the enthalpy rise from the gas power

$$h_d - h_i = \frac{\left(P_g\frac{33000}{J} - Q_r\right)}{W_{\text{rotor}}}$$

yielding

$$h_d = h_i + \frac{\left(P_g\frac{33000}{J} - Q_r\right)}{W_{\text{rotor}}}$$

(c) Determine the discharge stagnation temperature from the calculated discharge stagnation enthalpy and discharge stagnation pressure, according to the properties of the gas.

NOTE: An iterative calculation is required for real gases.

5.5 DIMENSIONLESS PARAMETERS

The following dimensionless parameters are calculated for the test conditions to provide verification that the limits of Table 3.2 have been met.

5.5.1 Machine Mach Number. The Machine Mach number is given by

$$Mm = U/a_i \qquad [5.5.1]$$

For ideal gases,

$$a_i = \sqrt{k_i g_c R T_i} \qquad [5.5.2]$$

For real gases,

$$a_i = \frac{\sqrt{k_i g_c Z_i R T_i}}{Y_i} = \sqrt{\gamma p_i v_i} \qquad [5.5.3]$$

5.5.2 Machine Reynolds Number. The Machine Reynolds number is given by

$$\text{Rem} = Ub/\nu \qquad [5.5.4]$$

(a) For Centrifugal Compressors

U = velocity at the outer blade tip diameter of the first impeller, ft/sec

b = first stage impeller exit width, ft

Copyright ASME International
Provided by IHS under license with ASME
No reproduction or networking permitted without license from IHS
Not for Resale

ν= kinematic viscosity of the gas at inlet conditions, ft^2/sec

(b) For Axial Compressors

U= velocity at first stage rotor blade outer diameter, ft/sec

b= chord at tip of first stage rotor blade, ft

ν= kinematic viscosity of the gas, ft^2/sec

5.5.3 Specific Volume Ratio. The specific volume ratio is the ratio of inlet to discharge total specific volume.

$$r_v = v_i/v_d \qquad [5.5.5]$$

5.5.4 Volume Flow Ratio. The volume flow ratio between any two points x and y in the section is given by

$$r_q = \frac{q_x}{q_y} = \frac{\left(\frac{w_x}{\rho_x}\right)}{\left(\frac{w_y}{\rho_y}\right)} \qquad [5.5.6]$$

For compressors without sidestreams the inlet to discharge volume flow ratio is limited by the specific volume ratio limit. For sidestream compressors the volume flow ratio limits of Fig. 3.2 also apply.

5.5.5 Flow Coefficient. The flow coefficient is given by

$$\phi = \frac{w_{rotor}}{\rho_i 2\pi N\left(\frac{D}{12}\right)^3} \qquad [5.5.7]$$

where w_{rotor} is the mass flow rate which enters the rotor and is compressed. It differs from the measured mass flow rate by the amount of leakage and sidestream flow which occurs between the rotor entry and the flow measurement station. Figure E.2 gives a schematic representation of mainstream, sidestream, and leakage flows.

5.6 CALCULATIONS FOR SPECIFIED OPERATING CONDITIONS

Performance at specified conditions is calculated by the following procedures. Certain additional dimensionless parameters are calculated for the test conditions and extended to specified conditions.

5.6.1 The Single Section Compressor

5.6.1.1 Description. The single section compressor from inlet to outlet measurement stations experiences no gas cooling other than natural radiation and convection. No gas flow is added or removed other than that lost through seal or balance piston leakage. No condensation occurs.

5.6.1.2 Calculation Procedure for Single Section Compressors. The first step is to calculate the following values:

(a) flow coefficient

(b) work input coefficient

(c) polytropic work coefficient

(d) polytropic efficiency

(e) total work input coefficient

The equations needed to do this are shown in Tables 5.1, 5.2, and 5.3, and are explained in detail in Appendix E. Some of these parameters are subject to correction for the difference in Machine Reynolds number between test and specified operating conditions, as explained in para. 5.6.3. The right-hand columns show the relationship between the test and specified condition values.

The second step is an interpolation process. Compressor performance at a single specified condition operating point is determined from at least two bracketing test points. To perform the interpolation, the specified operating condition dimensionless parameters are treated as functions of the specified operating condition flow coefficient. The specified operating condition dimensionless parameters for each point may be plotted as shown in Fig. 5.1. A smooth curve is drawn connecting the data points. For two points this is simply linear interpolation. Improved data interpolation may be possible with additional test points and nonlinear curve fitting.

The third step is to establish the compressor performance in dimensionless terms at the specified operating condition flow of interest. To do this, a specified operating condition flow coefficient is calculated from the flow rate, speed, and inlet conditions of interest. The remaining dimensionless performance parameters are defined from the interpolation process of step 2. This information is simply read from the curves of Fig. 5.1 at the flow coefficient of interest. The compressor performance at the specified operating condition point of interest is now defined in dimensionless terms.

The fourth step is to calculate the compressor performance in the desired dimensional form. This is done by solving the dimensionless parameter

Copyright ASME International
Provided by IHS under license with ASME
No reproduction or networking permitted without license from IHS
Not for Resale

TABLE 5.3
TOTAL WORK INPUT COEFFICIENT, ALL GASES

Parameter	Mathematical Description at Test Operating Conditions	Eq. No.	Assumption
Total work input coefficient (heat balance method)	[Note (1)] $[\Omega_{hb}]_t = \left[\frac{w_d}{w_{rotor}}\frac{(h_d - h_i)J}{\frac{1}{g_c}\Sigma U^2} + \frac{w_{sd}}{w_{rotor}}\frac{(h_{sd} - h_i)J}{\frac{1}{g_c}\Sigma U^2} + \frac{w_{ld}}{w_{rotor}}\frac{(h_{ld} - h_i)J}{\frac{1}{g_c}\Sigma U^2} + \frac{w_{lu}}{w_{rotor}}\frac{(h_{lu} - h_i)J}{\frac{1}{g_c}\Sigma U^2} - \frac{w_{su}}{w_{rotor}}\frac{(h_{sd} - h_i)J}{\frac{1}{g_c}\Sigma U^2} + \frac{Q_r J}{w_{rotor}\frac{1}{g_c}\Sigma U^2}\right]_t$	[5.3T-1]	$[\Omega_{hb}]_{sp} = [\Omega_{hb}]_t$
Total work input coefficient (heat balance method)	$[\Omega_{sh}]_t = \left[\frac{(P_{sh} - P_{parasitic})\,33000}{w_{rotor}\frac{1}{g_c}\Sigma U^2}\right]_t$	[5.3T-2]	$[\Omega_{sh}]_{sp} = [\Omega_{sh}]_t$

GENERAL NOTE: Appropriate units must be chosen to render the parameters dimensionless. Further explanation of the equations is available in Appendix E.

NOTE:
(1) This equation applies to a particular model as presented in Appendix E, para. E.3.12. Some of the terms may not apply in a particular case. Additional terms may apply. The analysis of para. E.3.12 may be followed to develop appropriate equations.

equations for those quantities of interest. Typical equations used to do this are shown in Table 5.4.

For example, to calculate the discharge pressure at the specified condition flow the following steps are taken: (1) the pressure ratio is calculated from the now known specified operating condition polytropic efficiency and polytropic work coefficients, and (2) the discharge pressure is the product of this pressure ratio and the specified operating condition inlet pressure.

5.6.2 The Multisection Compressor

5.6.2.1 Description. A multisection compressor is a compressor which may be treated as a number of individual single section compressors operating in series. The output from each single section provides input to the next section. The section boundaries may be drawn to exclude intermediate components such as external heat exchangers.

The following conditions shall be met to treat a compressor as a multisection compressor.

(a) It shall be possible to gather test information for each single section as though it were an independent single section compressor. That is, the test speed, flow rate, and inlet and outlet states must be available for each single section.

In the special case of sidestream mixing internally in a compressor, the inlet mixed condition shall be determined from the inlet states of the incoming streams.

(b) When a component such as an external heat exchanger exists between sections, the performance of that component shall be known for specified operating conditions.

(c) Differences in the intermediate component performance between test and specified operating conditions shall have a negligible or known effect upon the single section performance. That is, a negligible or known effect upon the dimensionless performance parameters.

5.6.2.2 Calculation Method for Multisection Compressors. The specified operating condition per-

Copyright ASME International
Provided by IHS under license with ASME
No reproduction or networking permitted without license from IHS
Not for Resale

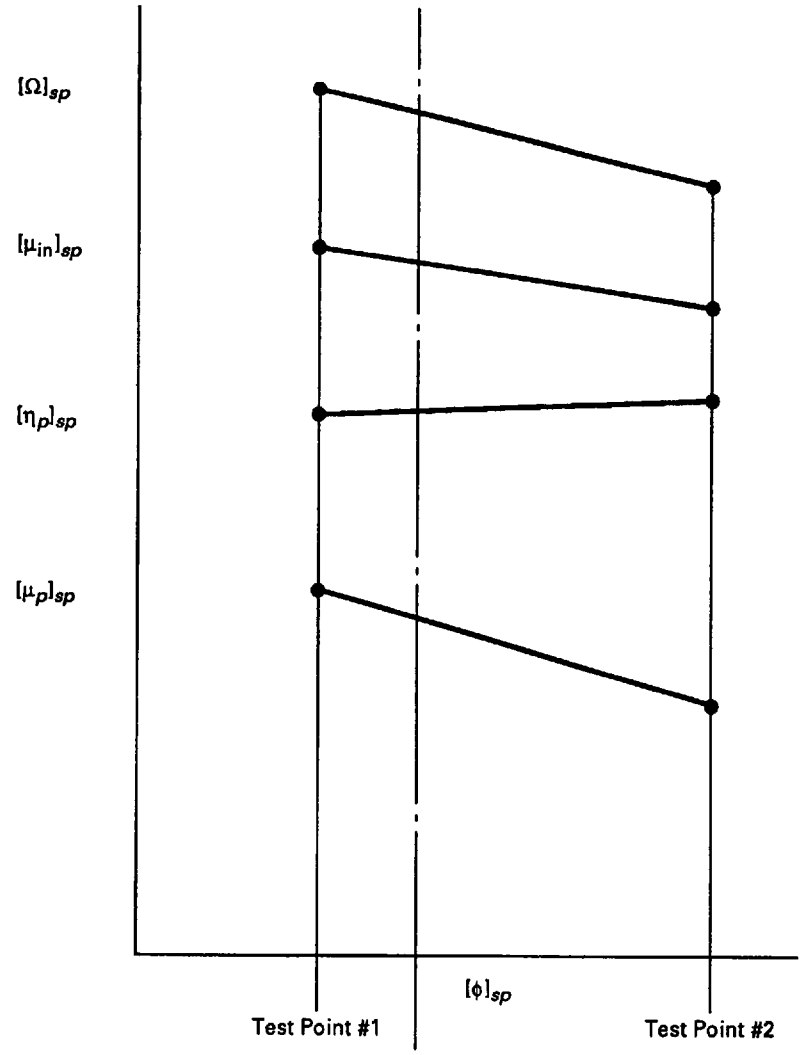

FIG. 5.1 SPECIFIED CONDITION CAPACITY COEFFICIENT FOR SPECIFIED CONDITION CAPACITY OF INTEREST

formance for multisection compressors is calculated from the specified operating condition performance of the individual calculated sections. The basic calculation procedure for each section is the same as for single section tests. The test data for each section is reduced to the form of dimensionless performance parameters which apply at the specified operating conditions. The performance of the first section is calculated just as is done for a single section compressor.

This yields the discharge conditions from the first section. If an intermediate component such as an intercooler exists before the next section entry, the effects on flow rate and gas state are taken into account.

For a heat exchanger these effects are temperature reduction, pressure drop, and condensate removal. For the case of mixed streams see para. E.5. The resulting condition becomes the specified operating condition gas state at the entry to the second section. The flow coefficient calculated from the known flow rate becomes the interpolating flow coefficient for the second section. The calculation process is repeated through the second section, remaining intermediate components and sections, and on to the final discharge. It is not necessary that an intermediate

Copyright ASME International
Provided by IHS under license with ASME
No reproduction or networking permitted without license from IHS
Not for Resale

TABLE 5.4
TYPICAL CONVERSION OF DIMENSIONLESS PARAMETERS

Parameter	Mathematical Description at Test Operating Conditions	Eq. No.
Rotor mass flow rate	$[W_{rotor}]_{sp} = \phi_{sp}\left[[\rho_i^2 2\pi N\left(\frac{D}{12}\right)^3\right]_{sp}$	[5.4T-1]
Quantity of gas delivered	$(w_d)_{sp} = (W_{rotor})_{sp} - (W_{sp})_{sp} - (W_{ld})_{sp}$ ℓ (Compressor)	[5.4T-2]
	$(W_i)_{sp} = (W_{rotor})_{sp} - (W_{lu})_{sp} - (W_{su})_{sp}$ ℓ (Exhauster)	[5.4T-3]
Capacity	$q_{sp} = \frac{(w_d)_{sp}}{(\rho_i)_{sp}}$	[5.4T-4]
Polytropic work (head) per section	$(W_p)_{sp} = (\mu_p)_{sp}\left(\frac{1}{g_c}\Sigma U^2\right)_{sp}$	[5.4T-5]
Pressure ratio (ideal gas with constant specific heats)	$(r_p)_{sp} = \left[(\mu_p)_{sp}\left(\frac{\frac{1}{g_c}\Sigma U^2}{\frac{n}{n-1}RT_i}\right)_{sp} + 1\right]^{\left(\frac{n}{n-1}\right)_{sp}}$	[5.4T-6]
	where $\frac{n}{(n-1)_{sp}} = \frac{k}{(k-1)_{sp}}(\eta_p)_{sp}$	[5.4T-7]
Pressure ratio (real gas)	$(r_p)_{sp} = \left[(\mu_p)_{sp}\left(\frac{\frac{1}{g_c}\Sigma U^2}{\frac{n}{n-1}f144p_iv_i}\right)_{sp} + 1\right]^{\left(\frac{n}{n-1}\right)_{sp}}$	[5.4T-8]
	where $(n_s)_{sp} = \left[\frac{\ln\frac{p_d}{p_i}}{\ln\frac{v_i}{v'_d}}\right]_{sp}$	[5.4T-9]
	$f_{sp} = \left[\frac{(h'_d - h_i)\,J}{\frac{n_s}{n_s-1}144\,(p_dv'_d - p_iv_i)}\right]_{sp}$	[5.4T-10]
	$n_{sp} = \left[\frac{\ln\frac{p_d}{p_i}}{\ln\frac{v_i}{v_d}}\right]_{sp}$	[5.4T-11]
	$144\,(p_iv_i)_{sp} = (Z_iRT_i)_{sp}$	[5.4T-12]

[Table continued on next page]

Copyright ASME International
Provided by IHS under license with ASME
No reproduction or networking permitted without license from IHS
Not for Resale

TABLE 5.4 (CONT'D)
TYPICAL CONVERSION OF DIMENSIONLESS PARAMETERS

Parameter	Mathematical Description at Test Operating Conditions	Eq. No.
Pressure ratio (real gas) (Cont'd)	$(h_d)_{sp} = (h_i)_{sp} + (\mu_{in})_{sp} \dfrac{\left(\frac{1}{g_c}\Sigma U^2\right)_{sp}}{J}$	
	or, where the Schultz method is used	
	$n_{sp} = \left[\dfrac{1}{Y - m\,(1 + X)}\right)_{sp}$	[5.4T-13]
	$m_{sp} = \left[\dfrac{ZR}{c_p}\left(\dfrac{1}{\eta_p} + X\right)\right]_{sp}$	[5.4T-14]
Discharge pressure	$(p_d)_{sp} = (r_p)_{sp}\,(p_i)_{sp}$	[5.4T-15]
Pressure rise	$\Delta p = (p_d)_{sp} - (p_i)_{sp}$	[5.4T-16]
Discharge enthalpy	$(h_d)_{sp} = \left[\mu_{in}\dfrac{\frac{1}{g_c}\Sigma U^2}{J} + h_i\right]_{sp}$	[5.4T-17]
Temperature ratio (ideal gas)	$(r_t)_{sp} = \left(\dfrac{p_d}{p_i}\right)_{sp}^{\left(\frac{n-1}{n}\right)_{sp}}$	[5.4T-19]
	The discharge temperature may also be obtained from the discharge pressure and enthalpy when the appropriate data is available.	
Gas power per section	$(p_d)_{sp} = \dfrac{w_{rotor_{sp}}\,\Omega_{sp}\left(\frac{1}{g_c}\Sigma U^2\right)_{sp}}{33000}$	[5.4T-20]
	Assumption $\Omega = \Omega_{hb_{sp}}$ or, $\Omega_{sh_{sp}}$	
Shaft power	$P_{sh_{sp}} = \dfrac{\Sigma_{sections}\,W_{rotor_{sp}}\,\Omega\left(\frac{1}{g_c}\Sigma U^2\right)_{sp} + P_{parasitic_{sp}}}{33000}$	[5.4T-21]
	Assumption, $\Omega = \Omega_{hb_{sp}}$ or, $\Omega_{sh_{sp}}$	

GENERAL NOTE: Consistent units must be used in defining dimensional properties.

Copyright ASME International
Provided by IHS under license with ASME
No reproduction or networking permitted without license from IHS
Not for Resale

component exist in order to treat a compressor in multiple sections. The exit of one section and entry of another may coincide.

The specified operating condition flow coefficients for the second and succeeding sections are functions of the performance of the preceding sections. This dependence upon preceding section performance is an effect commonly referred to as section matching. When the individual section performance curves are steep, and as the number of individual sections increase, the overall compressor performance becomes increasingly sensitive. It is because of this effect that it is important to follow the calculation method presented. What may appear to be small differences between test and specified operating conditions in each section may combine to show up as important effects in overall performance. Calculation methods which attempt to make overall corrections without explicit consideration of the section matching effect can lead to erroneous results.

5.6.3 Machine Reynolds Number Correction

5.6.3.1 General. The performance of a compressor is affected by the Machine Reynolds number. Frictional losses in the internal flow passages vary in a manner similar to friction losses in pipes or other flow channels. If the Machine Reynolds number at test operating conditions differs from that at specified operating conditions, a correction to the test results is necessary to properly predict the performance of the compressor.

The flow patterns of axial and centrifugal compressors are relatively complex. The term "Machine Reynolds number" is used to provide a basis for definition in this Code. The Machine Reynolds number correction for centrifugal compressors recommended in this Section is based on Ref. (D.3) but simplified for ease of application. The Machine Reynolds number correction for axial compressors is unchanged from the previous issue of the Code and is based on Ref. (D.7).

If another method of correction is used it shall be agreed on by the parties prior to the test (See Appendix F).

5.6.3.2 Correction Factor. Since frictional losses in the compressor are a function of the Machine Reynolds number it is appropriate to apply the correction to the quantity $(1 - \eta)$. The magnitude of the correction is a function of both the Machine Reynolds number ratio and the absolute value of the Machine Reynolds number, with increasing effect as the Machine Reynolds number decreases.

The correction to be applied is as follows:

(a) For Centrifugal Compressors

$$(1 - \eta_p)_{sp} = (1 - \eta_p)_t \left(\frac{RA_{sp}}{RA_t}\right)\left(\frac{RB_{sp}}{RB_t}\right) \quad [5.6.1]$$

$$RA = 0.066 + 0.934\left[\frac{(4.8 \times 10^6 \times b)}{Rem}\right]^{RC} \quad [5.6.2]$$

$$RB = \frac{\log\left(0.000125 + \dfrac{13.67}{Rem}\right)}{\log\left(\epsilon + \dfrac{13.67}{Rem}\right)} \quad [5.6.3]$$

$$RC = \frac{0.988}{Rem^{0.243}} \quad [5.6.4]$$

where

b= as defined in para. 5.5.2, ft

υ= the average surface roughness of the flow passage, in.

The polytropic work coefficient should be corrected for Machine Reynolds number in the same ratio as the efficiency.

$$Rem_{corr} = \frac{\mu_{p_{sp}}}{\mu_{p_t}} = \frac{\eta_{p_{sp}}}{\eta_{p_t}} \quad [5.6.5]$$

(b) For Axial Compressors

The correction for axial compressors continues to be based on Ref. (D.7), and is a function only of the Machine Reynolds number ratio and not the absolute value of the Machine Reynolds number.

$$(1 - \eta_p)_{sp} = (1 - \eta_p)_t \left(\frac{Rem_t}{Rem_{sp}}\right)^{(0.2)} \quad [5.6.6]$$

Again, as for the centrifugal compressor case,

$$Rem_{corr} = \frac{\mu_{p_{sp}}}{\mu_{p_t}} = \frac{\eta_{p_{sp}}}{\eta_{p_t}} \quad [5.6.7]$$

The limitations of Table 3.2 apply.

Copyright ASME International
Provided by IHS under license with ASME
No reproduction or networking permitted without license from IHS
Not for Resale

5.6.3.3 Limits of Application. Since the performance variations increase substantially as the Machine Reynolds number decreases, tests of compressors designed for operation at low Machine Reynolds numbers should be tested at conditions close to those specified. Therefore, the maximum and minimum permissible ratios between Rem_t and Rem_{sp} are shown in Fig. 3.4. Also, see Appendix F and Table E.2.

5.6.4 Mechanical Losses. When the mechanical losses at specified operating conditions are not known they may be determined from the following equation:

$$[Q_m]_{sp} = [Q_m]_t \left(\frac{N_{sp}}{N_t}\right)^{(2.5)} \qquad [5.6.8]$$

The exponent in the preceding equation may vary with the design of bearings, thrust loads, oiling systems, etc. It usually has a value between 2.0 and 3.0.

5.7 TREATMENT OF ERRORS

5.7.1 Source. The information presented in this Section is derived from PTC 19.1.

5.7.2 Errors. All measurements have errors. Errors are the difference between the measurements and the true value. The total error is made up of two components. One is called bias error. Bias errors are the systematic errors which may include those which are known and can be calibrated out, those which are negligible and are ignored, and those which are estimated and included in the uncertainty analysis. The other type of error is called precision error. Precision errors are the random errors observed in repeated measurements. Exact agreement in repeated measurements does not and is not expected to occur because of numerous error sources.

5.7.3 The Importance of Errors. One chooses to run a performance test with certain objectives in mind. They may be as varied as establishing a benchmark for maintenance or to verify guarantee performance. Acceptable error limits will depend upon the test objectives. The error in the final result shall be sufficiently small so as not to mask the test objective.

5.7.4 Uncertainty. Some means are necessary to quantify errors to make a judgement in terms of acceptable error limits for a test. Uncertainty is the estimated error limit of a measurement or result for a given coverage. Coverage is the frequency that an interval estimate of a parameter may be expected to contain the true value. For example, 95 percent uncertainty intervals provide 95 percent coverage of the true value. That is, in repeated sampling, when a 95 percent uncertainty interval is constructed for each sample, over the long run, the intervals will contain the true value 95 percent of the time.

Uncertainty analysis is the process of identifying and quantifying the errors in test measurements and propagating these errors to estimate the uncertainty in the final result. The methodology of ASME PTC 19.1 is the standard for ASME PTC 10 tests. If other methods are to be used they are subject to agreement by parties to the test.

5.7.5 Scope of Uncertainty Analysis. The scope of the uncertainty analysis required for a given test is intimately related to the test objectives. The scope of such analysis is subject to agreement by the parties to the test. Such agreements shall be made prior to undertaking the test.

5.7.6 The Methods of PTC 19.1. PTC 19.1 includes discussions and methods which enable the user to select an appropriate uncertainty model for analysis and for reporting test results. It defines, describes, and illustrates the various terms and methods used to provide meaningful estimates of the uncertainty of measurements and results. It is in essential agreement with various national and international standards on the same subject.

The uniqueness of PTC 10 test objectives precludes exhaustive treatment of uncertainty in this document. It is anticipated that the user will refer to PTC 19.1 for detailed information to apply to individual tests. The uncertainty analysis can thereby be tailored to meet the individual test objectives.

The following discussion is included to indicate the calculation method in general terms. A simple sample demonstration case is given in Sample Calculation C.8 of this Code. Another simple compressor example may be found in PTC 19.1. Both are intended simply to demonstrate the method. Neither should be construed as exhaustive in detail nor necessarily generally indicative of usual or anticipated uncertainty.

PTC 19.1 presents a step-by-step calculation procedure to be conducted before and after each test. It is summarized in brief as follows:

Step 1 — Define the measurement process.

(a) Review test objectives and test duration.

Copyright ASME International
Provided by IHS under license with ASME
No reproduction or networking permitted without license from IHS
Not for Resale

(b) List all independent measurement parameters and their nominal levels.

(c) List all calibrations and instrument setups.

(d) Define the functional relationship between the independent parameters and the test result.

Step 2 — List elemental error sources.

(a) Exhaustive list of all possible measurement error sources

(b) Group error sources according to calibration, data acquisition, and data reduction

Step 3 — Estimate elemental errors.

(a) Obtain estimate of each error in Step 2 above.

(b) Classify as precision or bias error.

Step 4 — Calculate bias and precision errors for each parameter.

Step 5 — Propagate the bias and precision errors.

(a) Bias and precision errors of the independent parameters are propagated separately all the way to the final result.

(b) Propagate according to the functional relationship defined in Step 1(d) above using sensitivity factors.

Step 6 — Calculate uncertainty.[1]

(a) Select U_{ADD} and/or U_{RSS} models.

(b) Obtain uncertainty.

Step 7 — Report

(a) Calculations

(b) Tabulated elemental errors

(c) Bias

(d) Precision $[t_{95}S]$, where $S = [\sum S_i^2/N_i]^{1/2}$

[1] The U_{ADD} and U_{RSS} models are the mathematical models which are used to combine bias and precision errors to a single uncertainty value. U_{ADD} provides approximately 99 percent coverage while U_{RSS} provides approximately 95 percent coverage when neither bias errors nor precision errors are negligible compared to the other. If the bias error is negligible, both U_{ADD} and U_{RSS} provide 95 percent coverage.

Copyright ASME International
Provided by IHS under license with ASME
No reproduction or networking permitted without license from IHS
Not for Resale

STD.ASME PTC 10-ENGL 1997 ■ 0759670 0605482 796 ■

SECTION 6 — REPORT OF TEST

6.1 CONTENTS

The Report of test shall include applicable portions of the information shown in para. 6.2, and may include other data as necessary.

Copies of the original test data log, certificates of instrument calibration, prime mover (motor or other type) efficiency data as needed, description of test arrangement and instrumentation, and any special written agreements pertaining to the test or the computation of results shall be included.

When tests are run over a range of operating conditions the results shall also be presented in the form of curves. The curves shall be clearly marked to denote use of static or total conditions.

6.2 TYPICAL REPORT INFORMATION

6.2.1 General Information

(a) Date of test
(b) Location of test
(c) Manufacturer
(d) Manufacturer's serial numbers and complete identification
(e) Party or parties conducting test
(f) Representatives of interested parties
(g) Detailed written statement of the test
(h) Agreement made by parties to the test

6.2.2 Description of Test Installation

(a) Type of compressor; radial flow, axial flow, etc.
(1) Type of impellers; open, shrouded, cast, fabricated, etc.
(2) Number of stages
(3) Arrangement of casing and piping
(4) Pipe sizes; inlet and discharge
(5) Arrangement of intercoolers, if used
(6) Impeller diameter and blade tip widths
(b) Description of lubricating system and lubricant properties
(c) Type of shaft seals
(d) Type and arrangements of driver; turbine direct connected, motor direct connected, motor and gear, etc.
(e) Description of compressor cooling system and coolant properties

6.2.3 Specified Operating Conditions

(a) Gas composition and source for properties
(b) Inlet gas state
(1) Total and static pressure[1]
(2) Total and static temperature[1]
(3) Total and static density[1]
(4) Relative humidity if applicable[1]
(c) Gas flow rate
(1) Inlet and discharge mass flow rate
(2) Inlet and discharge volume flow rate
(3) Capacity
(d) Discharge static and/or total pressure
(e) Coolant type, properties, flow rate, and temperature for cooled compressors
(f) Speed
(g) Others as needed

6.2.4 Expected Performance at Specified Operating Conditions

(a) Developed head
(b) Efficiency
(c) Power requirement
(d) Discharge total temperature
(e) Others as needed

6.2.5 Derived Parameters at Specified Operating Conditions

(a) Machine Mach number
(b) Pressure ratio
(c) Volume ratio
(d) Flow coefficient
(e) Machine Reynolds number
(f) Others as needed

6.2.6 Setup of Instruments and Methods of Measuring

(a) Description of all allowed departures from this Code which have been authorized by agreement
(b) Piping arrangement with sketches and diagrams
(c) Location of all measuring stations with diagrams and sketches

[1] Pressures, temperatures, and densities should be clearly identified as static or total conditions.

Copyright ASME International
Provided by IHS under license with ASME
No reproduction or networking permitted without license from IHS
Not for Resale

(d) Method of measuring flow rates
(e) Instruments used for the measurement of pressure, temperature, speed, composition of gas, density, and power
(f) Procedures and facilities used for the calibration of instruments
(g) Calibration data
(h) Instrument accuracy
(i) Source of test gas property data
(j) Method of determining power losses, if any, between the power measurement station and the compressor input shaft
(k) Description of sampling and analysis method for test gas

6.2.7 Mean Observations Derived From Test Data (All calibrations and instrument corrections having been applied)
(a) Test run number
(b) Duration of run
(c) Speed
(d) Inlet temperature
(e) Barometer reading
(f) Ambient temperature at barometer
(g) Inlet static pressure
(h) Dry bulb temperature if required
(i) Wet bulb temperature if required
(j) Dew point temperature if required
(k) Gas density if measured
(l) Gas composition if measured
(m) Discharge static pressure
(n) Discharge temperature
(o) Flowmeter data, typically:
(1) Pressure differential across flowmeter
(2) Pressure upstream side of flowmeter
(3) Temperature upstream side of flowmeter
(4) Flowmeter throat diameter
[Items (p) to (w) apply to cooled compressors:]
(p) Coolant flow rate
(q) Coolant inlet temperature
(r) Coolant outlet temperature
(s) Gas temperature at inlet of cooler
(t) Gas temperature at outlet of cooler
(u) Gas pressure at inlet of cooler
(v) Gas pressure at outlet of cooler
(w) Condensate drained from cooler
(x) Power input
(y) Torque
(z) Lubricant flow rate
(aa) Lubricant inlet temperature
(bb) Lubricant outlet temperature
(cc) Mean casing surface temperature
(dd) Ambient temperature
(ee) Casing surface area
(ff) Leakage flow rates

6.2.8 Computed Results for Test Operating Conditions
(a) Type of test
(b) Test run number
(c) Barometric pressure
(d) Gas composition
(e) Mass flow rate
(f) Inlet static conditions
(1) Pressure
(2) Temperature[2]
(3) Compressibility factor
(4) Density[2]
(5) Enthalpy
(6) Others as needed
(g) Inlet volume flow rate
(h) Inlet velocity temperature[2]
(i) Inlet velocity pressure
(j) Inlet total conditions
(1) Pressure
(2) Temperature
(3) Compressibility factor
(4) Density
(5) Enthalpy
(6) Others as needed
(k) Capacity
(l) Discharge static conditions
(1) Pressure
(2) Temperature[2]
(3) Compressibility factor
(4) Density[2]
(5) Enthalpy
(6) Others as needed
(m) Discharge volume flow rate
(n) Discharge velocity temperature[2]
(o) Discharge velocity pressure
(p) Discharge total conditions
(1) Pressure
(2) Temperature
(3) Compressibility factor
(4) Density
(5) Enthalpy
(6) Others as needed
(q) Leakages
(1) Mass flow rate
(2) Enthalpy
(3) Energy loss or gain
(r) Secondary flow streams
(1) Mass flow rate

[2] Iterative solution may be required.

Copyright ASME International
Provided by IHS under license with ASME
No reproduction or networking permitted without license from IHS
Not for Resale

(2) Enthalpy
(3) Average mixed gas state
(4) Energy loss or gain
(s) Rotor mass flow rate
(t) Mechanical loss
(u) Heat transfer loss
(v) Gas power
(w) Shaft power
(x) Head

6.2.9 Computed Test Performance Parameters

(a) Isentropic total discharge conditions
(1) Temperature
(2) Density
(3) Enthalpy
(b) Polytropic work coefficient
(1) Overall isentropic volume exponent
(2) Polytropic work factor
(3) Polytropic exponent
(4) Polytropic work
(5) Impeller blade tip velocity
(6) Polytropic work coefficient
(c) Isentropic work coefficient
(1) Isentropic exponent
(2) Isentropic work
(3) Isentropic work coefficient
(d) Polytropic efficiency
(e) Isentropic efficiency
(f) Work input coefficient
(g) Total work input coefficient
(1) Energy lost or gained via leakage
(2) Energy lost or gained via secondary flows
(3) Energy lost via casing heat transfer
(4) Mechanical loss
(h) Flow coefficient
(i) Volume ratio
(j) Machine Mach number
(k) Specific heat ratio, inlet and discharge
(l) Pressure ratio

6.2.10 Machine Reynolds Number Correction

(a) Test operating condition Machine Reynolds number
(b) Specified operating condition Machine Reynolds number
(c) Machine Reynolds number correction
(d) Specified operating condition polytropic efficiency
(e) Specified operating condition polytropic work coefficient

6.2.11 Computed Results for Specified Operating Conditions

(Speed and inlet gas state given)
(a) Flow rate
(1) Capacity
(2) Inlet and/or discharge mass flow rate
(3) Inlet and/or discharge volume flow rate
(4) Leakage flow rate
(5) Cooler condensate
(6) Secondary flow rates
(7) Others as needed
(b) Discharge conditions
(1) Static and total pressure
(2) Static and total discharge temperature
(3) Compressibility factor
(4) Static and total density
(5) Others as needed
(c) Work related terms
(1) Polytropic head
(2) Enthalpy rise
(3) Gas power
(4) Shaft power
(5) Others as needed

6.2.12 Uncertainty Analysis

6.2.13 Suggested Summary of Results, Comparing the Test, Test Results, and Intended Values

Copyright ASME International
Provided by IHS under license with ASME
No reproduction or networking permitted without license from IHS
Not for Resale

APPENDIX A
USE OF TOTAL PRESSURE AND TOTAL TEMPERATURE TO DEFINE COMPRESSOR PERFORMANCE

(This Appendix is not a part of ASME PTC 10–1997.)

A.1 The performance characteristics of a compressor which depend upon thermodynamic properties for their definition are, under the provisions of this Code, based on stagnation (total) conditions. This procedure can cause confusion if the principles involved are not kept clearly in mind. Compressor performance may be specified at static pressures and temperatures or at stagnation pressures and temperatures, as desired, and the following explanation serves to point out the differences between the two.

A.2 When the First Law of Thermodynamics, written as the general energy equation, is applied to a compressor section with the system boundaries defined as the interior wall of the casing and the transverse planes across the inlet and discharge flanges in the absence of leakage and sidestreams, the following expression results:

$$h_\alpha + \frac{V_\alpha^2}{2g_cJ} + \frac{y_\alpha}{J} + W_{sh} = h_\gamma + \frac{V_\gamma^2}{2g_cJ} + \frac{y_\gamma}{J} + \frac{Q_r}{w} \quad [A\text{-}1]$$

Subscripts α and γ refer to static inlet and discharge conditions, respectively. The inlet and discharge flanges may be considered to be at the same elevation so that y_α and y_γ, the elevation heads, become equal. Solving Eq. [A-1] for W_{sh} gives

$$W_{sh} = \left[h_\gamma + \frac{V_\gamma^2}{2g_cJ}\right] - \left[h_\alpha + \frac{V_\alpha^2}{2g_cJ}\right] + \frac{Q_r}{w} \quad [A\text{-}2]$$

This result involves static enthalpies determined by static pressures and temperatures.

A.3 When the stagnation concept is employed, Eq. [A-2] becomes

$$W_{sh} = h_d - h_i + Q_r/w \quad [A\text{-}3]$$

Subscripts i and d refer to stagnation inlet and discharge conditions, respectively, as determined by stagnation pressures and temperatures. In the stagnation process

$$h_i = h_\alpha + \frac{V_\alpha^2}{2g_cJ} \quad [A\text{-}4]$$

$$h_c = h_\gamma + \frac{V_\gamma^2}{2g_cJ} \quad [A\text{-}5]$$

The difference between static and stagnation conditions is shown graphically on a Mollier Diagram, Fig. A.1.

A.4 As will be noted from Fig. A.1, the process of compression takes place between states α and γ. Some calculations regarding the internal compression process might require the use of static states intermediate to α and γ. However, as shown by Eqs. [A-1] through [A-5], use of the stagnation properties for the external energy balance of the compressor is an excellent approximation because:

(a) "Charging" the compressor with receipt of gas at the stagnation enthalpy h_i (at stagnation pressure p_i) is equivalent to charging it with receipt of gas at the static enthalpy h,a (at static pressure p_α) plus kinetic energy

$$\frac{V_\alpha^2}{2g_cJ}$$

Copyright ASME International
Provided by IHS under license with ASME
No reproduction or networking permitted without license from IHS
Not for Resale

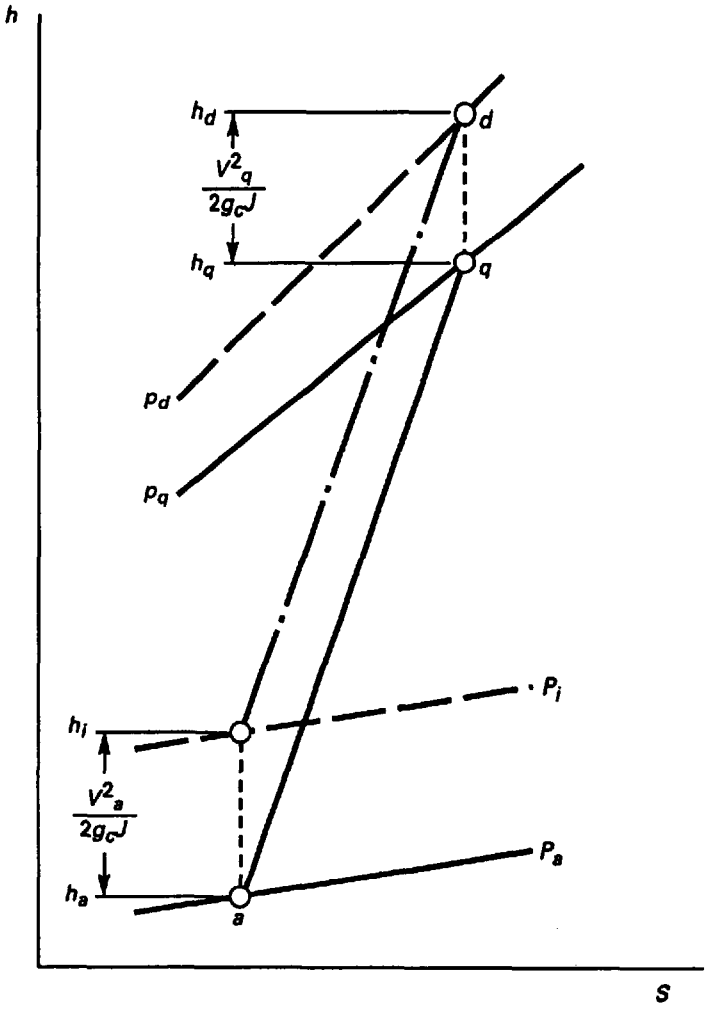

FIG. A.1 COMPRESSOR STATE POINTS STATIC AND TOTAL

and,

(b) "Crediting" the compressor with delivery of gas at the stagnation enthalpy h_d (at stagnation pressure p_d) is equivalent to crediting it with delivery of gas at the static enthalpy h_γ (at static pressure p_γ) plus kinetic energy

$$\frac{V_\gamma^2}{2g_cJ}$$

A.5 The preceding analysis can be applied only because the system boundaries were carefully defined so as to preclude any consideration of events, thermodynamic or otherwise, taking place within the compressor proper. Should a study of events internal to the compressor be desired, a new system must be defined and the appropriate conditions stated. Studies of events internal to the compressor are not included within the scope of this Code.

A.6 The other use of the stagnation pressure and stagnation temperature in this Code is for the determination of capacity. Capacity is a volumetric flow rate related to inlet conditions. Capacity is defined herein as the delivered mass flow rate divided by inlet total density corresponding to total pressure and temperature. This is convenient because it permits a clear definition of volume flow rate consistent with mass flow without referring to the design of the compressor.

Copyright ASME International
Provided by IHS under license with ASME
No reproduction or networking permitted without license from IHS
Not for Resale

APPENDIX B
PROPERTIES OF GAS MIXTURES

(This Appendix is not a part of ASME PTC 10–1997.)

B.1 The testing of modern compressors may require the use of a gas mixture as the test "gas" either because the specified gas is itself a mixture or because it is necessary, for one reason or another, to substitute for the specified gas during the test program, and a mixture is the only satisfactory method of obtaining the desired properties in the substitute gas. The use of a gas mixture presents, in essence, a two-part problem. If the state of the mixture is such that it may be considered as a mixture of ideal gases, the usual methods of classical thermodynamics can be applied to determine the state of each constituent gas. If, however, the state of the mixture is such that the mixture and the constituents deviate from the ideal gas laws, other methods must be used which recognize this deviation. In either case there is the necessity that accurate thermodynamic data for the gases be available. If accurate thermodynamic properties for a gas, based on experimental data or reliable mathematical and physical methods are available, these properties should be used with preference given to that data based on experimental work. So far as this Code is concerned, the problem is one of determining density, enthalpy, specific heats, and entropy of constituent gases at the pressure and temperature each experiences.

B.2 When the thermodynamic state is such that the gas mixture and its constituent gases must be treated as real gases, the method of defining the thermodynamic state of the constituent gases and thus arriving at their properties shall be agreed upon in writing prior to the test.

Once the state of the gas is defined, presumably by pressure and temperature, the other properties of interest may be obtained from charts, tables, or equations of state.

B.3 For ideal gases, the mole fraction, x_j, of any constituent gas j may be used to determine the partial pressure of that constituent by

$$p_j = x_j p_m \qquad \text{[B-1]}$$

The molal (volumetric) analysis of the mixture is one of the items of test data and gives the mole fraction readily. With a homogeneous mixture, all constituent gases will have the same temperatures as the mixture thus providing the second of the two independent properties needed to define the gas state. (This excludes saturated vapors.) With the state of each constituent thus defined, the individual property of interest may be determined and the equivalent mixture properly calculated by the methods outlined below.

B.4 With properties of the individual gases determined, the equivalent value of the property for the gas mixture may be calculated by summing the individual property values on a total basis, i.e., quantity of the gas times property value. The equations are summarized below.

Enthalpy:

$$m_m h_m = m_a h_a + m_b h_b + m_c h_c + \ell + m_j h_j \qquad \text{[B-2]}$$

$$n_m H_m = n_a H_a + n_b H_b + n_c H_c + \ell + n_j H_j \qquad \text{[B-3]}$$

$$H_m = x_a H_a + x_b H_b + x_c H_c + \ell + x_j H_j \qquad \text{[B-4]}$$

Entropy:

$$m_m s_m = m_a s_a + m_b s_b + m_c s_c + \ell + m_j s_j \qquad \text{[B-5]}$$

Copyright ASME International
Provided by IHS under license with ASME
No reproduction or networking permitted without license from IHS
Not for Resale

$$n_m S_m = n_a S_a + n_b S_b + n_c S_c + \ell + n_j S_j \quad [B\text{-}6]$$

$$S_m = x_a S_a + x_b S_b + x_c S_c + \ell + x_j S_j \quad [B\text{-}7]$$

Specific Heats:

$$m_m c_m = m_a c_a + m_b c_b + m_c c_c + \ell + m_j c_j \quad [B\text{-}8]$$

$$n_m C_m = n_a C_a + n_b C_b + n_c C_c + \ell + n_j C_j \quad [B\text{-}9]$$

$$C_m = x_a C_a + x_b C_b + x_c C_c + \ell + x_j C_j \quad [B\text{-}10]$$

In the preceding series of equations, [B-2], [B-5], and [B-8] are on a mass basis; [B-3], [B-6], and [B-9] are on a mole basis, and [B-4], [B-7], and [B-10] are on a mole fraction basis. It should be noted that the determination of the end point of the isentropic process starting at inlet conditions and ending at the discharge pressure and entropy value corresponding to inlet conditions will probably involve a trial-and-error solution.

Copyright ASME International
Provided by IHS under license with ASME
No reproduction or networking permitted without license from IHS
Not for Resale

APPENDIX C
SAMPLE CALCULATIONS

(This Appendix is not a part of ASME PTC 10–1997.)

The sample calculations contained in this Appendix demonstrate the basic calculation principles of this Code. Each sample highlights one or more facets of the necessary procedures for application of the Code to real machines. The data presented is typical and does not represent any actual operating unit. Additionally this data should not be taken as expected for any actual conducted test.

Sample C.1 demonstrates a Type 1 test for a centrifugal compressor using an ideal gas. The conversion of static readings to total conditions and calculation of results by heat balance and shaft power methods are covered.

Sample C.2 demonstrates a Type 2 test for a centrifugal compressor using an ideal gas. Application of Reynolds number corrections, heat loss to ambient and variable speed effects are covered.

Sample C.3 demonstrates the ideal gas application to selection of test speed and test gas and also covers the methods of power evaluations.

Sample C.4 demonstrates the treatment of bracketed test points.

Sample C.5 demonstrates how to select a test gas for a Type 2 test using ideal and real gas equations. A flow chart procedure is presented to assist in outlining the required steps.

Sample C.6 demonstrates a Type 2 test using real gas equations for data reduction.

Sample C.7 demonstrates the treatment of a two section compressor with externally piped intercooler.

Sample C.8 demonstrates the application of uncertainty analysis to this Code.

Copyright ASME International
Provided by IHS under license with ASME
No reproduction or networking permitted without license from IHS
Not for Resale

SAMPLE CALCULATION C.1
TYPE 1 TEST FOR A CENTRIFUGAL COMPRESSOR USING AN IDEAL GAS

This sample calculation is intended to demonstrate:

(a) Type 1 test
(b) Test gas same as specified gas
(c) Ideal gas
(d) No heat loss (except to lubricating oil)
(e) No flow leakages
(f) Centrifugal machine
(g) No flexibility to change compressor speed
(h) Single section machine

The purpose of this calculation is to determine the quantity of gas delivered and the compressor head, pressure rise, efficiency, and shaft input power.

Paragraph 3.11.4 of the Code requires that when a test is only to verify a single specified condition, the test shall consist of two test points which bracket the specified capacity. The calculations demonstrated in this sample calculation would be used on both of these bracketing points.

Description of Test Installation (see para. 6.2.2)

(a) Type of compressor — centrifugal
(1) type of impellers — shrouded
(2) number of stages — single section, five stages
(3) arrangement of casing and piping — not applicable to this sample
(4) pipe sizes; inlet and discharge — inlet pipe is 18 in., schedule 40 (D_i = 16.876 in.); discharge pipe is 10 in., schedule 40 (D_d = 10.020 in.)
(5) arrangement of intercoolers, if used — no intercooler
(6) impeller diameter and blade tip widths — impeller diameters $D_1 = D_2 = D_3$ = 18.4 in. and $D_4 = D_5$ = 16.6 in.; first stage impeller tip width = b = 1.500 in.

(b) Description of lubricating system and lubricant properties — Lubricating sytem oil flow rate is 4 gpm per bearing for a total flow rate of 8 gpm. Oil density is 55.6 lbm/ft^3 so the oil flow rate is 59.5 lbm/min [8 gpm/(7.48 gal/ft^3) × 55.6 lbm ft^3]. Oil has constant pressure specific heat of c_{po} = 0.462 Btu/lbm °R.

(c) Type of shaft seals — Not applicable to sample

(d) Type and arrangements of driver; turbine direct connected, motor direct connected, motor and gear, etc. — Not applicable to sample

(e) Description of compressor cooling system and coolant properties — No cooling system

Simplifying Assumptions for This Sample

(a) The gas (air) may be treated as an ideal gas with a constant specific heat (evaluated at the average of the inlet and discharge temperatures).

(b) The Reynolds number correction is negligible.

Specified Operating Conditions (see para. 6.2.3)

(a) Air with constant pressure specific heats of dry air and water vapor given in Fig. C.1, MW_{da} = 28.97 and MW_w = 18.02

Copyright ASME International
Provided by IHS under license with ASME
No reproduction or networking permitted without license from IHS
Not for Resale

(b) Inlet gas state
- *(1)* $p_{static\ i}$ = 14.00 psia at inlet flange
- *(2)* $T_{static\ dbi}$ = 560.0 °R at inlet flange
- *(3)* have to calculate inlet densities
- *(4)* RH_{inlet} = 81.7 percent

(c) Gas flow rate
- *(1)* inlet mass flow rate = discharge mass flow rate = w = 600 lbm/min
- *(2)* inlet and discharge volume flow rates have to be calculated
- *(3)* capacity to be calculated

(d) Discharge static pressure = 45.00 psia at discharge flange

(e) Compressor coolant not applicable

(f) N = 10,000 rpm

(g) Not applicable

Expected Performance at Specified Operating Conditions (see para. 6.2.4)

(a) Developed polytropic head = 44100 ft · lbf/lbm (based on total conditions)

(b) Efficiency (polytropic) = n_p = 0.80

(c) Power requirement = P_{sh} = 1019 hp

(d) Discharge total temperature = 844.1 °R (The discharge static temperature is assumed given as 842.8 °R.)

The following preliminary calculations establish the given specified operating conditions in a form convenient for the Code calculations.

(a) Partial pressure of water vapor is found using the steam tables: [Ref. (D.20)]

$$(p_{wi})_{sp} = RH(p_{sat})_{1003.3°F} = 0.817\ (0.9580\ \text{psia}) = 0.7826\ \text{psia}$$

(b) Air humidity ratio at inlet flange [Ref. (D.20)]

$$(HR_i)_{sp} = \left(0.6220\ \frac{p_{wi}}{p_i - p_{wi}}\right)_{sp}$$

$$= \frac{\left(0.6220\ \frac{\text{lbm } w}{\text{lbm } da}\right)(0.7825\ \text{psia})}{(14.00 - 0.7826)\ \text{psia}}$$

$$= \left(0.03683\ \frac{\text{lbm } w}{\text{lbm } da}\right)\left(\frac{\text{lbmole } w}{180.02\ \text{ibm } w}\right)\left(\frac{28.97\ \text{ibm } da}{\text{lbmole } da}\right)$$

$$= 0.05921\ \frac{\text{lbmole } w}{\text{lbmole } da}$$

(c) Air molecular weight [Ref. (D.20)]

$$(MW_a)_{sp} = \frac{\text{mole } da\ (MW_{da}) + \text{mole } w\ (MW_w)}{\text{mole } da + \text{mole } w}$$

$$= \frac{1.000\ \text{lbmole } da\left(28.97\ \frac{\text{lbm } da}{\text{lbmole } da}\right) + 0.05921\ \text{lbmole } w\left(18.02\ \frac{\text{lbm } w}{\text{lbmole } w}\right)}{1.000\ \text{lbmole } da + 0.05921\ \text{lbmole } w}$$

Copyright ASME International
Provided by IHS under license with ASME
No reproduction or networking permitted without license from IHS
Not for Resale

$$= 28.36 \frac{\text{lbm}}{\text{lbmole}}$$

(d) Air specific heat at constant pressure is found using dry air and steam properties (Fig. C.1)

$$(c_p)_{sp} = \frac{\text{mass } da\ (c_{pda}) + \text{mass } w\ (c_{pw})}{\text{mass } da + \text{mass } w}$$

$$(c_{p_i})_{sp} = \frac{1.000 \text{ lbm } da \left(0.240 \frac{\text{Btu}}{\text{lbm } da\ °\text{R}}\right) + 0.03683 \text{ lbm } w \left(0.448 \frac{\text{Btu}}{\text{lbm } w\ °\text{R}}\right)}{1.000 \text{ lbm } da + 0.03683 \text{ lbm } w}$$

$$= 0.247 \frac{\text{Btu}}{\text{lbm } °\text{R}}$$

$$(c_{p_d})_{sp} = \frac{1.000 \text{ lbm } da \left(0.2445 \frac{\text{Btu}}{\text{lbm } da\ °\text{R}}\right) + 0.03683 \text{ lbm } w \left(0.462 \frac{\text{Btu}}{\text{lbm } w\ °\text{R}}\right)}{1.000 \text{ lbm } da + 0.03683 \text{ lbm } w}$$

$$= 0.252 \frac{\text{Btu}}{\text{lbm } °\text{R}} \text{ [note: } (HR_i)_{sp} = (HR_d)_{sp}\text{]}$$

(e) Air specific heat ratio [Ref. (D.20)]

$$k_{sp} = \left(\frac{c_p}{c_w}\right)_{sp} = \left(\frac{c_p}{c_p - R}\right)_{sp}$$

$$(k_i)_{sp} = \frac{0.247 \frac{\text{Btu}}{\text{lbm } °\text{R}}}{\left(0.247 \frac{\text{Btu}}{\text{lbm } °\text{R}}\right) - \left(1.986 \frac{\text{Btu}}{\text{lbmole } °\text{R}}\right)\left(\frac{\text{lbmole}}{28.36 \text{ lbm}}\right)} = 1.396$$

$$(k_d)_{sp} = \frac{0.252 \frac{\text{Btu}}{\text{lbm } °\text{R}}}{\left(0.252 \frac{\text{Btu}}{\text{lbm } °\text{R}}\right) - \left(1.986 \frac{\text{Btu}}{\text{lbmole } °\text{R}}\right)\left(\frac{\text{lbmole}}{28.36 \text{ lbm}}\right)} = 1.385$$

(f) Static specific volume at inlet and discharge flanges is found using the ideal gas law

Copyright ASME International
Provided by IHS under license with ASME
No reproduction or networking permitted without license from IHS
Not for Resale

$$(v_{\text{static } i})_{sp} = \left(\frac{RT_{\text{static } db}}{p_{\text{static}}}\right)_{sp}$$

$$(v_{\text{static } i})_{sp} = \frac{\left(\frac{1545 \text{ ft lbf}}{\text{lbmole °R}}\right)\left(\frac{\text{lbmole}}{28.36 \text{ lbm}}\right)(560.0 \text{ °R})}{\left(14.00 \frac{\text{lbf}}{\text{in}^2}\right)\left(144 \frac{\text{in}^2}{\text{ft}^2}\right)} = 15.13 \frac{\text{ft}^3}{\text{lbm}}$$

$$(v_{\text{static } d})_{sp} = \frac{\left(\frac{1545 \text{ ft lbf}}{\text{lbmole °R}}\right)\left(\frac{\text{lbmole}}{28.36 \text{ lbm}}\right)(842.8 \text{ °R})}{\left(45.00 \frac{\text{lbf}}{\text{in}^2}\right)\left(144 \frac{\text{in}^2}{\text{ft}^2}\right)} = 7.086 \frac{\text{ft}^3}{\text{lbm}}$$

(g) Average fluid velocity at inlet and discharge flanges (see para. 5.4.3.1)

$$V_{sp} = \left(\frac{\frac{w}{60}}{\rho A}\right)_{sp} = \left(\frac{w\, V_{\text{static}}}{A\, 60}\right)_{sp}$$

$$(V_i)_{sp} = \frac{\left(600 \frac{\text{lbm}}{\text{min}}\right)\left(15.13 \frac{\text{ft}^3}{\text{lbm}}\right)}{\frac{\pi}{4}\left(\frac{16.876}{12} \text{ ft}\right)^2 \left(60 \frac{\text{sec}}{\text{min}}\right)} = 97.40 \frac{\text{ft}}{\text{sec}}$$

$$(V_d)_{sp} = \frac{\left(600 \frac{\text{lbm}}{\text{min}}\right)\left(7.086 \frac{\text{ft}^3}{\text{lbm}}\right)}{\frac{\pi}{4}\left(\frac{10.020}{12} \text{ ft}\right)^2 \left(60 \frac{\text{sec}}{\text{min}}\right)} = 129.4 \frac{\text{ft}}{\text{sec}}$$

(h) Fluid Mach number at inlet and discharge flanges (see para. 5.4.2.5)

$$M_{sp} = \left(\frac{V}{\sqrt{kg_c RT}}\right)_{sp}$$

$$(M_i)_{sp} = \frac{97.40 \frac{\text{ft}}{\text{sec}}}{\sqrt{1.396\left(32.174 \frac{\text{ft lbm}}{\text{lbf sec}^2}\right)\left(1545 \frac{\text{ft lb}}{\text{lbmole °R}}\right)\left(\frac{\text{lbmole}}{28.36 \text{ lbm}}\right)(560 \text{ °R})}} = 0.0832$$

Copyright ASME International
Provided by IHS under license with ASME
No reproduction or networking permitted without license from IHS
Not for Resale

$$(M_d)_{sp} = \frac{129.4 \frac{\text{ft}}{\text{sec}}}{\sqrt{1.385 \left(32.174 \frac{\text{ft lbm}}{\text{lbf sec}^2}\right) \left(1545 \frac{\text{ft lb}}{\text{lbmole °R}}\right) \left(\frac{\text{lbmole}}{28.36 \text{ lbm}}\right) (842.8 \text{ °R})}} = 0.0905$$

(i) Total temperatures at inlet and discharge flanges are found using the energy equation and assuming an adiabatic process (see Eq. [5.4.6])

$$T_{sp} = \left(T_{\text{static } db} + \frac{V^2}{2 J g_c cp_p}\right)_{sp}$$

$$(T_i)_{sp} = 560.0 \text{ °R} + \frac{\left(97.40 \frac{\text{ft}}{\text{sec}}\right)^2}{2 \left(778.17 \frac{\text{ft lbf}}{\text{Btu}}\right) \left(32.174 \frac{\text{ft lbm}}{\text{lbf sec}^2}\right) \left(0.247 \frac{\text{Btu}}{\text{lbm °R}}\right)} = 560.8 \text{ °R}$$

$$(T_d)_{sp} = 842.8 \text{ °R} + \frac{\left(129.4 \frac{\text{ft}}{\text{sec}}\right)^2}{2 \left(778.17 \frac{\text{ft lbf}}{\text{Btu}}\right) \left(32.174 \frac{\text{ft lbm}}{\text{lbf sec}^2}\right) \left(0.252 \frac{\text{Btu}}{\text{lbm °R}}\right)} = 844.1 \text{ °R}$$

(j) Since the Fluid Mach number is less than 0.2, the total pressure may be calculated according to the simplified Eq. [5.4.4]

$$p_{sp} = (p_{\text{static}})_{sp} + \left(\frac{V^2}{2 V_{\text{static}} g_c}\right)_{sp}$$

$$(p_i)_{sp} = 14.00 \text{ psia} + \frac{\left(97.40 \frac{\text{ft}}{\text{sec}}\right)^2}{2 \left(15.13 \frac{\text{ft}^3}{\text{lbf}}\right) \left(32.174 \frac{\text{ft lbm}}{\text{lbf sec}^2}\right) \left(144 \frac{\text{in}^2}{\text{ft}^2}\right)} = 14.07 \text{ psia}$$

$$(p_d)_{sp} = 45.00 \text{ psia} + \frac{\left(129.4 \frac{\text{ft}}{\text{sec}}\right)^2}{2 \left(7.086 \frac{\text{ft}^3}{\text{lbf}}\right) \left(32.174 \frac{\text{ft lbm}}{\text{lbf sec}^2}\right) \left(144 \frac{\text{in}^2}{\text{ft}^2}\right)} = 45.26 \text{ psia}$$

Copyright ASME International
Provided by IHS under license with ASME
No reproduction or networking permitted without license from IHS
Not for Resale

(k) Total density at the inlet and discharge flanges is found using the ideal gas law

$$(\rho_i)_{sp} = \left(\frac{p_i}{RT_i}\right)_{sp} = \frac{\left(14.07 \frac{\text{lbf}}{\text{in}^2}\right)\left(144 \frac{\text{in}^2}{\text{ft}^2}\text{ lbf}\right)}{\left(1545 \frac{\text{ft lbf}}{\text{lbmole °R}}\right)\left(\frac{1}{28.36} \frac{\text{lbmole}}{\text{lbm}}\right)(560.8\ °\text{R})} = 0.06632 \frac{\text{lbm}}{\text{ft}^3}$$

$$(\rho_d)_{sp} = \left(\frac{p_d}{RT_d}\right)_{sp} = \frac{\left(45.26 \frac{\text{lbf}}{\text{in}^2}\right)\left(144 \frac{\text{in}^2}{\text{ft}^2}\right)}{\left(1545 \frac{\text{ft lbf}}{\text{lbmole °R}}\right)\left(\frac{1}{28.36} \frac{\text{lbmole}}{\text{lbm}}\right)(844.1\ °\text{R})} = 0.1417 \frac{\text{lbm}}{\text{ft}^3}$$

(l) The sum of the squares of the blade tip speeds is

$$\left(\sum_{j=1}^{5} U_j^2\right)_{sp} = \left(\frac{N^2}{4}\sum_{j=1}^{5} D_j^2\right)_{sp} = \frac{\left(10^4 \frac{\text{rev}}{\text{min}}\right)^2 [3\ (18.4\text{ in})^2 + 2\ (16.6\text{ in})^2]\left(2\ \pi \frac{\text{rad}}{\text{rev}}\right)^2}{4\left(12 \frac{\text{in}}{\text{ft}}\right)^2\left(60 \frac{\text{sec}}{\text{min}}\right)^2} = 2.983 \times 10^6 \frac{\text{ft}^2}{\text{sec}^2}$$

Mean Observations Derived from Test Data (see para. 6.2.7)

(a) Test run number 1
(b) Duration of test = 30 minutes
(c) Compressor speed = 10,000 rpm
(d) Inlet temperature = $T_{\text{static } dbi}$ = 540.0 °R
(e) Barometer reading = 14.17 psia
(f) Ambient temperature at barometer = 540.8 °R
(g) Inlet static pressure = 14.10 psia
(h) Dry bulb temperature at inlet flange = $T_{\text{static } dbi}$ = 540.0 °R
(i) Wet bulb temperature at inlet flange = $T_{\text{static } wbi}$ = 530.0 °R
(j) Dew point at inlet flange = 524.4 °R
(k) Gas density not measured
(l) MW_{da} = 28.97 and MW_w = 18.02
(m) Discharge static pressure = $P_{\text{static } d}$ = 47.00 psi
(n) Discharge static temperature = $T_{\text{static } dbd}$ = 830.0 °R
(o) Mass flow rate = 38,000 lbm/hr
(p) to (w) Not applicable to this sample
(x) Shaft power input = P_{sh} = 1097 hp
(y) Shaft torque = 57.62 ft · lb
(z) Lubricating system oil flow rate is 4 gpm per bearing for a total flow rate of 8 gpm. Oil density is 55.6 lbm/ft^3 so the oil flow rate is w_o = 59.5 lbm/min. Oil has constant pressure specific heat c_{po} = 0.464 Btu/lbm.
(aa) Lubricant inlet temperature = $T_{o\,\text{in}}$ = 530.0 °R
(bb) Lubricant outlet temperature = $T_{o\,\text{out}}$ = 561.0 °R
(cc) to (ff) Not applicable to this sample

Computed Results for Test Operating Conditions (similar to para. 6.2.8)

The previous test data is converted into a form convenient for Code calculations.

(a) The air humidity ratio of the inlet air is found using air and steam properties [Ref. (D.20)]

Copyright ASME International
Provided by IHS under license with ASME
No reproduction or networking permitted without license from IHS
Not for Resale

$$(HR_{wbi})_t = 0.6220 \frac{P_{sat'}\ 70.3\ °F}{P_{static\ i} - P_{sat'}\ 70.3\ °F}$$

$$= 0.6220 \frac{0.3667\ \text{psia}}{14.10\ \text{psia} - 0.3667\ \text{psia}} = 0.01661 \frac{\text{lbm } w}{\text{lbm } da}$$

$$(HR_{dbi})_t = \left[\frac{C_{pdai}\,(T_{dbi} - T_{wbi}) + HR_{wbi}\,(h_{gwbi} - h_{fwbi})}{h_{gdbi} - h_{fwbi}}\right]_t$$

$$= \frac{0.240 \frac{\text{Btu}}{\text{lbm } da\ °\text{R}} (540.0 - 530.0)\ R + \left(0.01661 \frac{\text{lbm } w}{\text{lbm } da}\right)(1092.2 - 38.35) \frac{\text{Btu}}{\text{lbm } w}}{(1095.5 - 38.35) \frac{\text{Btu}}{\text{lbm } w}}$$

$$= \left(0.01881 \frac{\text{lbm } w}{\text{lbm } da}\right)\left(\frac{1}{18.02} \frac{\text{lbmole } w}{\text{lbm } w}\right)\left(28.97 \frac{\text{lbm } da}{\text{lbmole } da}\right)$$

$$= 0.03024 \frac{\text{lbmole } w}{\text{lbmole } da}$$

(b) Air molecular weight [Ref. (D.20)]

$$(MW_a)_t = \left[\frac{\text{mole } da\ (MW_{da}) + \text{mole } w\ (MW_w)}{\text{mole } da + \text{mole } w}\right]_t$$

$$= \frac{1.000\ \text{lbmole } da \left(28.97 \frac{\text{lbm } da}{\text{lbmole } da}\right) + 0.03024\ \text{lbmole } w \left(18.02 \frac{\text{lbm } w}{\text{lbmole } w}\right)}{1.00\ \text{lbmole } da + 0.03024\ \text{lbmole } w}$$

$$= 28.65 \frac{\text{lbm}}{\text{lbmole}}$$

(c) Air specific heat is found using dry air and steam properties (see Fig. C.1)

$$(c_p)_t = \left[\frac{\text{mass } da\ (c_{pda}) + \text{mass } w\ (c_{pw})}{\text{mass } da + \text{mass } w}\right]_t$$

$$(c_{p_i})_t = \frac{1.000\ \text{lbm } da \left(0.240 \frac{\text{Btu}}{\text{lbm } da\ °\text{R}}\right) + 0.01881\ \text{lbm} \left(0.447 \frac{\text{Btu}}{\text{lbm } w\ °\text{R}}\right)}{1.000\ \text{lbm } da + 0.01881\ \text{lnm } w}$$

$$= 0.244 \frac{\text{Btu}}{\text{lbm } °\text{R}}$$

Copyright ASME International
Provided by IHS under license with ASME
No reproduction or networking permitted without license from IHS
Not for Resale

$$(c_{p_d})_t = \frac{1.000 \text{ lbm } da \left(0.244 \frac{\text{Btu}}{\text{lbm } da \text{ °R}}\right) + 0.01881 \text{ lbm } \left(0.460 \frac{\text{Btu}}{\text{lbm } w \text{ °R}}\right)}{1.000 \text{ lbm } da + 0.01881 \text{ lnm } w}$$

$$= 0.248 \frac{\text{Btu}}{\text{lbm °R}}$$

Average specific heat

$$(c_p)_t = \left(\frac{c_{pi} + c_{pd}}{2}\right)_t = \frac{0.244 + 0.248}{2} \frac{\text{Btu}}{\text{lbm °R}} = 0.246 \frac{\text{Btu}}{\text{lbm °R}}$$

(d) Air specific heat ratio

$$k_t = \left(\frac{C_p}{c_v}\right)_t = \left(\frac{c_p}{c_p - R}\right)_t$$

$$(k_i)_t = \frac{0.244 \frac{\text{Btu}}{\text{lbm °R}}}{\left(0.244 \frac{\text{Btu}}{\text{lbm °R}}\right) - \left(0.1986 \frac{\text{Btu}}{\text{lbmole °R}}\right)\left(\frac{1}{28.65} \frac{\text{lbmole}}{\text{lbm}}\right)} = 1.397$$

$$(k_d)_t = \frac{0.248 \frac{\text{Btu}}{\text{lbm °R}}}{\left(0.248 \frac{\text{Btu}}{\text{lbm °R}}\right) - \left(0.1986 \frac{\text{Btu}}{\text{lbmole °R}}\right)\left(\frac{1}{28.65} \frac{\text{lbmole}}{\text{lbm}}\right)} = 1.388$$

(e) Static specific volume at inlet and discharge flanges is found using the ideal gas law

$$(v_{\text{static}})_t = \left[\frac{RT_{\text{static } db}}{p_{\text{static}}}\right]_t$$

$$(v_{\text{static } i})_t = \frac{\left(1545 \frac{\text{ft lbf}}{\text{lbmole °R}}\right)\left(\frac{1}{28.65} \frac{\text{lbmole}}{\text{lbm}}\right) 540.0 \text{ °R}}{\left(14.10 \frac{\text{lb}}{\text{in}^2}\right)\left(144 \frac{\text{in}^2}{\text{ft}^2}\right)} = 14.34 \frac{\text{ft}^3}{\text{lbm}}$$

Copyright ASME International
Provided by IHS under license with ASME
No reproduction or networking permitted without license from IHS
Not for Resale

$$(v_{\text{static } d})_t = \frac{\left(1545 \frac{\text{ft lbf}}{\text{lbmole °R}}\right)\left(\frac{1}{28.65} \frac{\text{lbmole}}{\text{lbm}}\right) 830.0 \text{ °R}}{\left(47.00 \frac{\text{lb}}{\text{in}^2}\right)\left(144 \frac{\text{in}^2}{\text{ft}^2}\right)} = 6.613 \frac{\text{ft}^3}{\text{lbm}}$$

(f) Fluid velocity at inlet and discharge flanges (see para. 5.4.3.1)

$$V_t = \left[\frac{\frac{w}{60}}{\rho A}\right]_t = \left[\frac{w\, v_{\text{static}}}{A\,(60)}\right]_t$$

$$(V_i)_t = \frac{\left(38{,}000 \frac{\text{lbm}}{\text{hr}}\right)\left(14.34 \frac{\text{ft}^3}{\text{lbm}}\right)}{\frac{\pi}{4}\left(\frac{16.87}{12} \text{ ft}\right)^2 \left(3600 \frac{\text{sec}}{\text{hr}}\right)} = 97.45 \frac{\text{ft}}{\text{sec}}$$

$$(V_d)_t = \frac{\left(38{,}000 \frac{\text{lbm}}{\text{hr}}\right)\left(6.613 \frac{\text{ft}^3}{\text{lbm}}\right)}{\frac{\pi}{4}\left(\frac{10.020}{12} \text{ ft}\right)^2 \left(3600 \frac{\text{sec}}{\text{hr}}\right)} = 127.5 \frac{\text{ft}}{\text{sec}}$$

(g) Fluid Mach numbers at inlet and discharge flanges (see para. 5.4.2.5)

$$M_t = \left(\frac{V}{\sqrt{k g_c R T}}\right)_t$$

$$(M_i)_t = \frac{97.45 \frac{\text{ft}}{\text{sec}}}{\sqrt{1.397 \left(32.174 \frac{\text{ft lbm}}{\text{lbf sec}^2}\right)\left(1545 \frac{\text{ft lb}}{\text{lbmole °R}}\right)\left(\frac{1}{28.65} \frac{\text{lbmole}}{\text{lbm}}\right)(540.0 \text{ °R})}} = 0.0852$$

$$(M_d)_t = \frac{127.5 \frac{\text{ft}}{\text{sec}}}{\sqrt{1.388 \left(32.174 \frac{\text{ft lbm}}{\text{lbf sec}^2}\right)\left(1545 \frac{\text{ft lb}}{\text{lbmole °R}}\right)\left(\frac{1}{28.65} \frac{\text{lbmole}}{\text{lbm}}\right)(830.0 \text{ °R})}} = 0.0902$$

(h) Total temperature at inlet and discharge flanges is found using the energy equation for an adiabatic process (see Eq. [5.4.6])

Copyright ASME International
Provided by IHS under license with ASME
No reproduction or networking permitted without license from IHS
Not for Resale

$$T_t = \left(T_{\text{static } db} + \frac{V^2}{2\, c_p J g_c}\right)_t$$

$$(T_i)_t = 540.0\ ^\circ\text{R} + \frac{\left(97.45\ \frac{\text{ft}}{\text{sec}}\right)^2}{2\left(0.244\ \frac{\text{Btu}}{\text{lbm}\ ^\circ\text{R}}\right)\left(778.17\ \frac{\text{ft lbf}}{\text{Btu}}\right)\left(32.174\ \frac{\text{ft lbm}}{\text{lbf sec}^2}\right)} = 540.8\ ^\circ\text{R}$$

$$(T_d)_t = 830.0\ ^\circ\text{R} + \frac{\left(127.5\ \frac{\text{ft}}{\text{sec}}\right)^2}{2\left(0.248\ \frac{\text{Btu}}{\text{lbm}\ ^\circ\text{R}}\right)\left(778.17\ \frac{\text{ft lbf}}{\text{Btu}}\right)\left(32.174\ \frac{\text{ft lbm}}{\text{lbf sec}^2}\right)} = 831.3\ ^\circ\text{R}$$

(i) Since the Fluid Mach number is less than 0.2, the total pressure may be calculated according to the simplified method of Eq. [5.4.4]

$$p_t = (p_{\text{static}})_t + \left(\frac{V^2}{2 v_{\text{static}} g_c}\right)_t$$

$$(p_i)_t = 14.10\ \text{psia} + \frac{\left(97.45\ \frac{\text{ft}}{\text{sec}}\right)^2}{2\left(14.34\ \frac{\text{ft}^3}{\text{lbm}}\right)\left(32.174\ \frac{\text{ft lbm}}{\text{lbf sec}^2}\right)\left(144\ \frac{\text{in}^2}{\text{ft}^2}\right)} = 14.17\ \text{psia}$$

$$(p_d)_t = 47.00\ \text{psia} + \frac{\left(127.5\ \frac{\text{ft}}{\text{sec}}\right)^2}{2\left(6.613\ \frac{\text{ft}^3}{\text{lbm}}\right)\left(32.174\ \frac{\text{ft lbm}}{\text{lbf sec}^2}\right)\left(144\ \frac{\text{in}^2}{\text{ft}^2}\right)} = 47.27\ \text{psia}$$

Copyright ASME International
Provided by IHS under license with ASME
No reproduction or networking permitted without license from IHS
Not for Resale

(j) Total density at the inlet and discharge flanges is found using the ideal gas law

$$(\rho_u)_{sp} = \left(\frac{p_i}{RT_i}\right)_t = \frac{\left(14.17 \frac{\text{lbf}}{\text{in}^2}\right)\left(144 \frac{\text{in}^2}{\text{ft}^2}\right)}{\left(1545 \frac{\text{ft lbf}}{\text{lbmole °R}}\right)\left(\frac{1}{28.65} \frac{\text{lbmole}}{\text{lbm}}\right)(540.8\ °\text{F})} = 0.06997 \frac{\text{lbm}}{\text{ft}^3}$$

$$(\rho_d)_{sp} = \left(\frac{p_i}{RT_i}\right)_t = \frac{\left(47.26 \frac{\text{lbf}}{\text{in}^2}\right)\left(144 \frac{\text{in}^2}{\text{ft}^2}\right)}{\left(1545 \frac{\text{ft lbf}}{\text{lbmole °R}}\right)\left(\frac{1}{28.65} \frac{\text{lbmole}}{\text{lbm}}\right)(831.3\ °\text{F})} = 0.1518 \frac{\text{lbm}}{\text{ft}^3}$$

(k) The sum of the squares of the blade tip speeds is

$$\left[\sum_{j=1}^{5} U_j^2\right]_t = \left[\frac{N^2}{4}\sum_{j=1}^{5} D_j^2\right]_t = \left[\frac{N^2}{4}\sum_{j=1}^{5} D_j^2\right]_{sp} = 2.983 \times 10^6 \frac{\text{ft}^2}{\text{sec}^2}$$

(l) The shaft power was measured by the shaft power method to be $(P_{sh})_t = 1097$ hp (shaft power method)

The shaft power can also be determined using Eq. [5.4.14]:

$$P_{sh} = P_g + P_{\text{parasitic}}$$

where Eqs. [5.4.17] and [5.4.18] show the parasitic losses to be mechanical losses (represented by the lubricating oil temperature rise).

Also using Eq. [5.4.13] gives

$$(P_{sh})_t = (P_g)_t + w_o\, c_{po}\, \Delta T_o + Q_r$$

$$= (wc_p)_t\, (T_d - T_i)_t + w_o\, c_{po}\, \Delta T_o + 0$$

$$= \frac{\left(38{,}000 \frac{\text{lbm}}{\text{hr}}\right)\left(0.2459 \frac{\text{ft lbf}}{\text{lbm °R}}\right)(831.1 - 540.8)\ °\text{R}}{\left(42.440 \frac{\text{Btu}}{\text{min hp}}\right)\left(60 \frac{\text{min}}{\text{hr}}\right)}$$

$$= \frac{\left(59.5 \frac{\text{lbm}}{\text{min}}\right)\left(0.462 \frac{\text{Btu}}{\text{lbm °R}}\right)(31.0\ °\text{R})}{\left(42.44 \frac{\text{Btu}}{\text{min}}{\text{hp}}\right)}$$

$$= 1065 \text{ hp} + 20.1 \text{ hp}$$

$$= 1085 \text{ hp (heat balance method)}$$

Copyright ASME International
Provided by IHS under license with ASME
No reproduction or networking permitted without license from IHS
Not for Resale

(m) The gas power can be calculated from the heat balance method using Eq. [5.4.13]

$$(P_g)_t = (w\ c_p)_t\ (T_d - T_i)_t + Q_r$$

$$= 1065 \text{ hp (heat balance method)}$$

The gas power can also be calculated from the shaft power using the shaft power method. Using Eqs. [5.4.12], [5.4.17], and [5.4.18]

$(P_g)_t = (P_{sh})_t - w_o\ c_{po}\ \Delta\ T_o$

$= 1097 \text{ hp} - 20.1 \text{ hp}$

$= 1077 \text{ hp (shaft power method)}$

(n) The capacity is

$$q_t = \left(\frac{w}{\rho_i}\right)_t = \frac{\left(38{,}000\ \frac{\text{lbm}}{\text{hr}}\right)\left(60\ \frac{\text{hr}}{\text{min}}\right)}{\left(0.06997\ \frac{\text{lbm}}{\text{ft}^3}\right)} = 9051\ \frac{\text{ft}^3}{\text{min}}$$

Check for a Type 1 Test

The following calculations confirm that the test conditions meet the limits prescribed for a Type 1 test in Table 3.1.

(a) Inlet pressure departure

$$\frac{(p_i)_{sp} - (p_i)_t}{(p_i)_{sp}} \times 100 = \frac{14.07 - 14.17}{14.07} \times 100 = -0.71\%$$

The test inlet total pressure is within the Table 3.1 limit of 5%.

(b) Inlet temperature departure

$$\frac{(T_i)_{sp} - (T_i)_t}{(T_i)_{sp}} \times 100 = \frac{650.8 - 540.8}{560.8} \times 100 = 3.6\%$$

The test inlet temperature is within the Table 3.1 limit of 8%.

(c) Speed departure

$$\frac{(N_i)_{sp} - (N_i)_t}{(N_i)_{sp}} \times 100 = \frac{10{,}000 - 10{,}000}{10{,}000} \times 100 = 0\%$$

The test speed is within the Table 3.1 limit of 2%.

(d) Molecular weight departure

$$\frac{(MW_i)_{sp} - (MW_i)_t}{(MW_i)_{sp}} \times 100 = \frac{28.36 - 28.65}{28.36} \times 100 = -1.02\%$$

The test molecular weight is within the Table 3.1 limit of 2%.

Copyright ASME International
Provided by IHS under license with ASME
No reproduction or networking permitted without license from IHS
Not for Resale

(e) Capacity departure

$$\frac{q_{sp} - q_t}{q_{sp}} \times 100 = \frac{\left(\frac{W}{\rho_i}\right)_{sp} - \left(\frac{W}{\rho_i}\right)_t}{\left(\frac{W}{\rho_i}\right)_{sp}} \times 100$$

$$= \left(\frac{\frac{36{,}000}{0.06632} - \frac{38{,}000}{0.06997}}{\frac{36{,}000}{0.06632}} \right) \times 100 = -0.049\%$$

The test inlet capacity is within the Table 3.1 limit of 4%.

(f) Density departure

$$\frac{(\rho_i)_{sp} - (\rho_i)_t}{(\rho_i)_{sp}} \times 100 = \frac{0.06632 - 0.06997}{0.06632} \times 100 = -5.5\%$$

The test inlet total density is within the Table 3.1 limit of 8%.

The test coolant temperature difference and coolant flow rate were not checked with the specified values since there is no coolant at the specified condition.

Since all the test parameters listed in Table 3.1 (excluding the coolant parameters) satisfy the Table 3.1 limits, the test is a Type 1 test.

Computed Test Dimensionless Parameters (similar to para. 6.2.9)

The dimensionless parameters which form the basis for the conversion from test data to specified operating conditions are calculated in this section.

(a) Polytropic efficiency is found as follows:

Average specific heat ratio

$$k_t = \left(\frac{c_p}{c_p - R}\right)_t = \frac{0.246 \frac{\text{Btu}}{\text{lbm °R}}}{\left(0.246 \frac{\text{ft lbf}}{\text{lbm °R}}\right) - \left(1.986 \frac{\text{Btu}}{\text{lbmole °R}}\right)\left(\frac{1}{28.65} \frac{\text{lbmole}}{\text{lbm}}\right)} = 1.392$$

Polytropic exponent (see Eq. [5.1T-5])

$$n_t = \left[\frac{\ln\left(\frac{p_d}{p_d}\right)}{\ln\left(\frac{v_i}{v_d}\right)}\right]_t = \left[\frac{\ln\left(\frac{p_d}{p_i}\right)}{\ln\left(\frac{p_d}{p_i}\frac{T_i}{T_d}\right)}\right]_t$$

$$= \frac{\ln\left(\frac{47.26 \text{ psia}}{14.17 \text{ psia}}\right)}{\ln\frac{(47.26 \text{ psia})\,(540.8 \text{ °R})}{(14.17 \text{ psia})\,(831.3 \text{ °R})}} = 1.555$$

Copyright ASME International
Provided by IHS under license with ASME
No reproduction or networking permitted without license from IHS
Not for Resale

Polytropic efficiency (see Eq. [5.1T-9])

$$(\eta_p)_t = \frac{\left(\frac{n}{n-1}\right)_t}{\left(\frac{k}{k-1}\right)_t} = \frac{\left(\frac{1.555}{0.555}\right)}{\left(\frac{1.392}{0.392}\right)} = 0.7905$$

(b) Flow coefficient (see Eq. [5.1T-1])

$$\phi_t = \left(\frac{w}{2\pi\rho_i N D^3}\right)_t = \frac{\left(38{,}000\ \frac{\text{lbm}}{\text{hr}}\right)\left(\frac{\text{rev}}{2\pi\ \text{rad}}\right)\left(\frac{\text{hr}}{60\ \text{min}}\right)}{\left(0.06997\ \frac{\text{lbm}}{\text{ft}^3}\right)\left(10{,}000\ \frac{\text{rev}}{\text{min}}\right)\left(\frac{18.4}{12}\ \text{ft}\right)^3} = 0.03996$$

(c) Polytropic work coefficient (see Eq. [5.1T-4])

$$(\mu_p)_t = \left[\frac{\left(\frac{n}{n-1}\right) RT_i\left[\left(\frac{p_d}{p_i}\right)^{\frac{n-1}{n}} - 1\right]}{\frac{\Sigma U^2}{g_c}}\right]_t$$

$$= \frac{\left(\frac{1.555}{0.555}\right)\left(1545\ \frac{\text{ft lbf}}{\text{lbmole °R}}\right)\left(\frac{1}{28.65}\ \frac{\text{lbmole}}{\text{lbm}}\right)(540.8\ °\text{R})\left[\left(\frac{47.26}{14.17}\right)^{\frac{0.555}{1.555}} - 1\right]}{\left(2.983 \times 10^6\ \frac{\text{ft}^2}{\text{sec}^2}\right)\left(\frac{1}{32.174}\ \frac{\text{lbf sec}^2}{\text{ft lbm}}\right)}$$

$$= 0.4734$$

(d) Total work input coefficient using the shaft power method (see Eqs. [5.4.18] and [5.3T-2])

$$(Q_m)\ t = w_o c_{p_o} \Delta T_o = \frac{\left(59.5\ \frac{\text{lbm}}{\text{min}}\right)\left(0.462\ \frac{\text{Btu}}{\text{lbm °R}}\right)(31.0\ °\text{R})}{\left(42.44\ \frac{\text{Btu}}{\text{min hr}}\right)} = 20.1\ \text{hp}$$

$$(\Omega_{sh})_t = \left[\frac{P_{sh} - Q_m}{w\frac{\Sigma U^2}{g_c}}\right]_t$$

$$= \frac{(1097\ \text{hp} - 20.1\ \text{hp})\left(33{,}00\ \frac{\text{ft lbf}}{\text{min hp}}\right)\left(60\ \frac{\text{min}}{\text{hr}}\right)}{\left(38.000\ \frac{\text{lbm}}{\text{hr}}\right)\left(2.983 \times 10^6\ \frac{\text{ft}^2}{\text{sec}^2}\right)\left(\frac{1}{32.174}\ \frac{\text{lbf sec}^2}{\text{ft lbm}}\right)} = 0.6052$$

(e) Total work input coefficient using the heat balance method (see Eq. [5.3T-1])

Copyright ASME International
Provided by IHS under license with ASME
No reproduction or networking permitted without license from IHS
Not for Resale

$$(\Omega_{hb})_t = \frac{\left[c_p\,(T_d - T_i) + \dfrac{Q_r}{w}\right] J}{\dfrac{\Sigma\, U^2}{g_c}}$$

$$= \frac{\left[\left(0.2459\ \dfrac{\text{Btu}}{\text{lbm °R}}\right)(831.3 - 540.8)\ \text{°R} + 0\right]\dfrac{778.16\ \text{ft lb}}{\text{Btu}}}{\left(2.983\ 10^6\ \dfrac{\text{ft}^2}{\text{sec}^2}\right)\left(\dfrac{1}{32.174}\ \dfrac{\text{lbf sec}^2}{\text{ft lbm}}\right)} = 0.5996$$

(f) Work input coefficient (see Eq. [5.2T-2])

$$(\mu_{in})_t = \frac{c_p\,(T_d - T_i)}{\dfrac{\Sigma\, U^2}{g_c}} = 0.5996$$

(g) Volume ratio at stagnation conditions (for information only)

$$\left(\frac{v_i}{v_d}\right)_t = \left(\frac{\rho_d}{\rho_i}\right)_t = \frac{0.1518\ \dfrac{\text{lbm}}{\text{ft}^3}}{0.6997\ \dfrac{\text{lbm}}{\text{ft}^3}} = 2.170$$

Computed Results for Specified Operating Conditions (similar to para. 6.2.11)

The performance at the specified operating conditions is calculated from the test dimensionless parameters. These values apply directly since the Reynolds number corrections are negligible.

(a) Discharge total pressure at specified conditions is obtained as follows:

Average specific heat

$$(c_p)_{sp} = \left(\frac{c_{p_i} + c_{p_d}}{2}\right)_{sp} = \frac{0.247\ \dfrac{\text{Btu}}{\text{lbm °R}} + 0.252\ \dfrac{\text{Btu}}{\text{lbm °R}}}{2} = 0.250\ \frac{\text{Btu}}{\text{lbm °R}}$$

(The design discharge temperature has been used to estimate c_{p_d})

Average specific heat ratio

$$k_{sp} = \left(\frac{c_p}{c_p - R}\right)_{sp} = \frac{0.250\ \dfrac{\text{Btu}}{\text{lbm °R}}}{\left(0.250\ \dfrac{\text{Btu}}{\text{lbm °R}}\right) - \left(1.986\ \dfrac{\text{Btu}}{\text{lbmole °R}}\right)\left(\dfrac{1}{28.36}\ \dfrac{\text{lbmole}}{\text{lbm}}\right)}$$

$$= 1.389$$

Polytropic exponent is found assuming equality of the polytropic efficiency at test and specified conditions (see Eq. [5.4T-7])

Copyright ASME International
Provided by IHS under license with ASME
No reproduction or networking permitted without license from IHS
Not for Resale

$$\left(\frac{n}{n-1}\right)_{sp} = (\eta_p)_{sp}\left(\frac{k}{k-1}\right)_{sp} = (\eta_p)_t\left(\frac{k}{k-1}\right)_{sp}$$

$$= 0.7905\left(\frac{1.389}{0.389}\right) = 2.823$$

$$n_{sp} = \frac{2.823}{1.823} = 1.549$$

Discharge pressure ratio is found using the definition of the polytropic work coefficient and assuming equality of the polytropic work coefficients at test and specified conditions to give (see Eq. [5.5T-6])

$$\left(\frac{p_d}{p_i}\right)_{sp} = \left[(\mu_p)_{sp}\left(\frac{\frac{\Sigma U^2}{g_c}}{\left(\frac{n}{n-1}\right)RT_i}\right)_{sp} + 1\right]^{\left(\frac{n}{n-1}\right)_{sp}}$$

$$= \left[(\mu_p)_t\left(\frac{\frac{\Sigma U^2}{g_c}}{\left(\frac{n}{n-1}\right)RT_i}\right)_{sp} + 1\right]^{\left(\frac{n}{n-1}\right)_{sp}}$$

$$= \left[0.4734\left(\frac{\left(2.983 \times 10^6 \frac{\text{ft}^2}{\text{sec}^3}\right)\left(\frac{1}{32.174}\frac{\text{lbf sec}^2}{\text{ft lbm}}\right)}{\left(\frac{1.549}{0.549}\right)\left(1545\frac{\text{ft lb}}{\text{lbmole °R}}\right)\left(\frac{1}{28.36}\frac{\text{lbmole}}{\text{lbm}}\right)(560.8\ °\text{R})}\right) + 1\right]^{2.823} = 3.196$$

$$(p_d)_{sp} = 3.196\ (p_i)_{sp} = 3.196\ (14.07\ \text{psia}) = 44.97\ \text{psia}$$

(b) Capacity at specified conditions is found using the definition of the flow coefficient and equating the flow coefficients at test and specified conditions (see Eq. [5.4T-1]).

$$q = \left(\frac{w}{\rho_i}\right)_{sp} = \phi_{sp}(ND^3)_{sp} = \phi_t(ND^3)_{sp}$$

$$= 0.03996\left(10{,}000\frac{\text{rev}}{\text{min}}\right)\left(2\pi\frac{\text{rad}}{\text{rev}}\right)\left(\frac{18.4}{12}\text{ ft}\right)^3 = 9051\frac{\text{ft}^3}{\text{min}}$$

Copyright ASME International
Provided by IHS under license with ASME
No reproduction or networking permitted without license from IHS
Not for Resale

(c) The inlet mass flow rate is

$$w_{sp} = \left(\frac{w}{\rho_i}\right)_{sp} (\rho_i)_{sp} = \left(9051 \frac{\text{ft}^3}{\text{min}}\right)\left(0.06631 \frac{\text{lbm}}{\text{ft}^3}\right)\left(60 \frac{\text{min}}{\text{hr}}\right)$$

$$= 36{,}020 \frac{\text{lbm}}{\text{hr}} = 600.3 \frac{\text{lbm}}{\text{min}}$$

(d) The specific volume ratio based on total conditions is (for information only)

$$\left(\frac{v_i}{v_d}\right)_{sp} = \left[\left(\frac{p_d}{p_i}\right)^{\frac{1}{n}}\right]_{sp} = 3.196^{\frac{1}{1.549}} = 2.117$$

(e) Discharge total temperature is found using Eq. [5.4T-18]

$$(T_d)_{sp} = \left[T_i \left(\frac{p_d}{p_i}\right)^{\frac{n-1}{n}}\right]_{sp} = 560.8\ ^\circ\text{R}\ (3.196)^{\frac{0.549}{1.549}} = 846.5\ ^\circ\text{R}$$

Since this temperature is nearly equal to the design value of 844.1°R, the average specific heat chosen for the calculations is assumed appropriate.

(f) Gas power is found using the equality of the total work input coefficient between the test and the specified operating condition. Using the shaft power method and Eq. [5.4T-20] gives

$$(P_{g_{sh}})_{sp} = \frac{w_{sp}\,(\Omega_{hb})_{sp}\left(\frac{\Sigma U^2}{g_c}\right)_{sp}}{33{,}000} = \frac{600.3 \frac{\text{lbm}}{\text{min}}\,(0.6052)\left(2.983 \times 10^6 \frac{\text{ft}^2}{\text{sec}^2}\right)\left(\frac{1}{32.174} \frac{\text{lbf sec}^2}{\text{ft lbm}}\right)}{\left(33{,}000 \frac{\text{ft lbf}}{\text{min hp}}\right)\left(60 \frac{\text{min}}{\text{hr}}\right)} = 1021 \text{ hp}$$

Using the heat balance method, Eq. [5.4T-20] gives

$$(P_{g_{hb}})_{sp} = \frac{w_{sp}\,(\Omega_{hb})_{sp}\left(\frac{\Sigma U^2}{g_c}\right)_{sp}}{33{,}000} = \frac{\left(600.3 \frac{\text{lbm}}{\text{min}}\right)(0.5996)\left(2.983 \times 10^6 \frac{\text{ft}^2}{\text{sec}^2}\right)\left(\frac{1}{32.174} \frac{\text{lbf sec}^2}{\text{ft lbm}}\right)}{\left(33{,}000 \frac{\text{ft lbf}}{\text{min hp}}\right)\left(60 \frac{\text{min}}{\text{hr}}\right)} = 1011 \text{ hp}$$

(g) Since the specified speed and the test speed are equal, the mechanical losses are assumed equal. The shaft power is then

$$(p_{sh})_{sh} = (P_{g_{sh}} + Q_m)_{sp} = 1021 \text{ hp} + 20.1 \text{ hp} = 1041 \text{ hp (shaft power method)}$$

or

$$(P_{sh})_{sp} = (P_{g_{hb}} + Q_m)_{sp} = 1011 \text{ hp} + 20.1 \text{ hp} = 1031 \text{ hp (heat balance method)}$$

(h) Static discharge temperature and pressure may be calculated from the mass flow rate, flow area, and total temperature and pressure. Since the flow Mach number is below 0.2, Eqs. [5.4.2], [5.4.3], [5.4.4], and [5.4.6] may be used.

Copyright ASME International
Provided by IHS under license with ASME
No reproduction or networking permitted without license from IHS
Not for Resale

With a guessed velocity of 130.5 ft/sec, obtained by trial and error,

$$(T_{\text{static } d})_{sp} = (T_d)_{sp} - \frac{V_d^2}{2Jg_c c_p} = 846.5 - \frac{(130.5)^2 \frac{\text{ft}^2}{\text{sec}^2}}{2\left(778.17 \frac{\text{ft lbf}}{\text{Btu}}\right)\left(32.174 \frac{\text{ft lbm}}{\text{lbf sec}}\right)\left(0.252 \frac{\text{Btu}}{\text{lbm °R}}\right)} = 845.2 \text{ °R}$$

$$(\rho_{\text{static } d})_{sp} = (\rho_d)_{sp} - \frac{(\rho_{\text{static } d})_{sp} V_d^2}{2g_c (144)} = 44.97 \frac{\text{lbf}}{\text{in}^2} - \frac{\left(0.140 \frac{\text{lbm}}{\text{ft}^3}\right)(130.5)^2 \frac{\text{ft}^2}{\text{sec}^2}}{2\left(32.174 \frac{\text{ft lbm}}{\text{lbf sec}^2}\right)\left(144 \frac{\text{in}^2}{\text{ft}^2}\right)} = 44.7 \frac{\text{lbf}}{\text{in}^2}$$

Checking

$$V = \left(\frac{w}{60}\right)\left(\frac{\left(600.3 \frac{\text{lbm}}{\text{min}}\right)\left(\frac{1}{60} \frac{\text{min}}{\text{sec}}\right)}{\left(0.140 \frac{\text{lbm}}{\text{ft}^3}\right)\frac{\pi}{4}\left(\frac{10.02}{12}\right)^2 \text{ft}^2}\right) = 130.5 \frac{\text{ft}}{\text{sec}}$$

$$(\rho_{\text{static } d})_{sp} = \frac{144\,(\rho_{\text{static } d})_{sp}}{R\,(T_{\text{static } d})_{sp}} = \frac{\left(144 \frac{\text{in}^2}{\text{ft}^2}\right)\left(44.7 \frac{\text{lbf}}{\text{in}^2}\right)}{\left(1545 \frac{\text{ft lbf}}{\text{lbm °R}}\right)\left(\frac{1}{28.36} \frac{\text{lbmole}}{\text{lbm}}\right)(854.2 \text{ °R})} = 0.140 \frac{\text{lbm}}{\text{ft}^3}$$

Copyright ASME International
Provided by IHS under license with ASME
No reproduction or networking permitted without license from IHS
Not for Resale

TABLE C.1.1
CALCULATION SUMMARY

Quantity	Symbol	Units	Test Value	Test Corrected to Specified Operating Condition	Expected at Specified Operating Condition
1. Quantity of gas delivered	w	lbm/hr	38,000	36,000	36,000
2. Pressure rise	Δp	psi	33.1	30.9	
3. Head (total)	W_p	ft · lbf/lbm	43,900	43,900	44,100
4. Shaft power					
(a) Shaft method	$(P_{sh})_{sh}$	hp	1100	1040	1020
(b) Heat method	$(P_{sh})_{hb}$	hp	1080	1030	1020
5. Polytropic efficiency	η_p		0.790	0.790	0.80
6. Flow coefficient	ϕ		0.0400	0.0400	
7. Machine Mach no.	Mm		—	—	—
8. Machine Reynolds no.	Rem		—	—	—
9. Specific volume ratio (total)	(v_i/v_d)		2.17	2.11	
10. Specific heat ratio	k		1.39	1.39	
11. Polytropic work coefficient	μ_p		0.473	0.473	
12. Work input coefficient	μ_{min}		0.600	0.600	
13. Total work input coefficient					
(a) Shaft method	Ω_{sh}		0.605	0.605	
(b) Heat method	Ω_{hp}		0.600	0.600	
14. Capacity	$q = (w/o_i)$	ft³/min	9050	9050	
15. Inlet gas state					
(a) Static temperature	T	°R	540	560	560
(b) Static pressure	p	psia	14.1	14.0	14.0
(c) Total temperature	T	°R	541	561	561
(d) Total pressure	p	psia	14.2	14.1	14.1
16. Discharge gas state					
(a) Static temperature	T	°R	830	845	843.5
(b) Static pressure	p	psia	47.0	44.7	45.0
(c) Total temperature	T	°R	831	847	844.8
(d) Total pressure	p	psia	47.3	45.0	45.3
17. Gas power					
(a) Shaft method	$(P_g)_{sh}$	hp	1080	1020	1000
(b) Heat method	$(P_g)_{hb}$	hp	1060	1010	1000
18. Cooling condition	Not applicable				
19. Speed	N	rpm	10,000	10,000	10,000
20. Mechanical losses	Q_m	hp	20.1	20.1	20.0

Copyright ASME International
Provided by IHS under license with ASME
No reproduction or networking permitted without license from IHS
Not for Resale

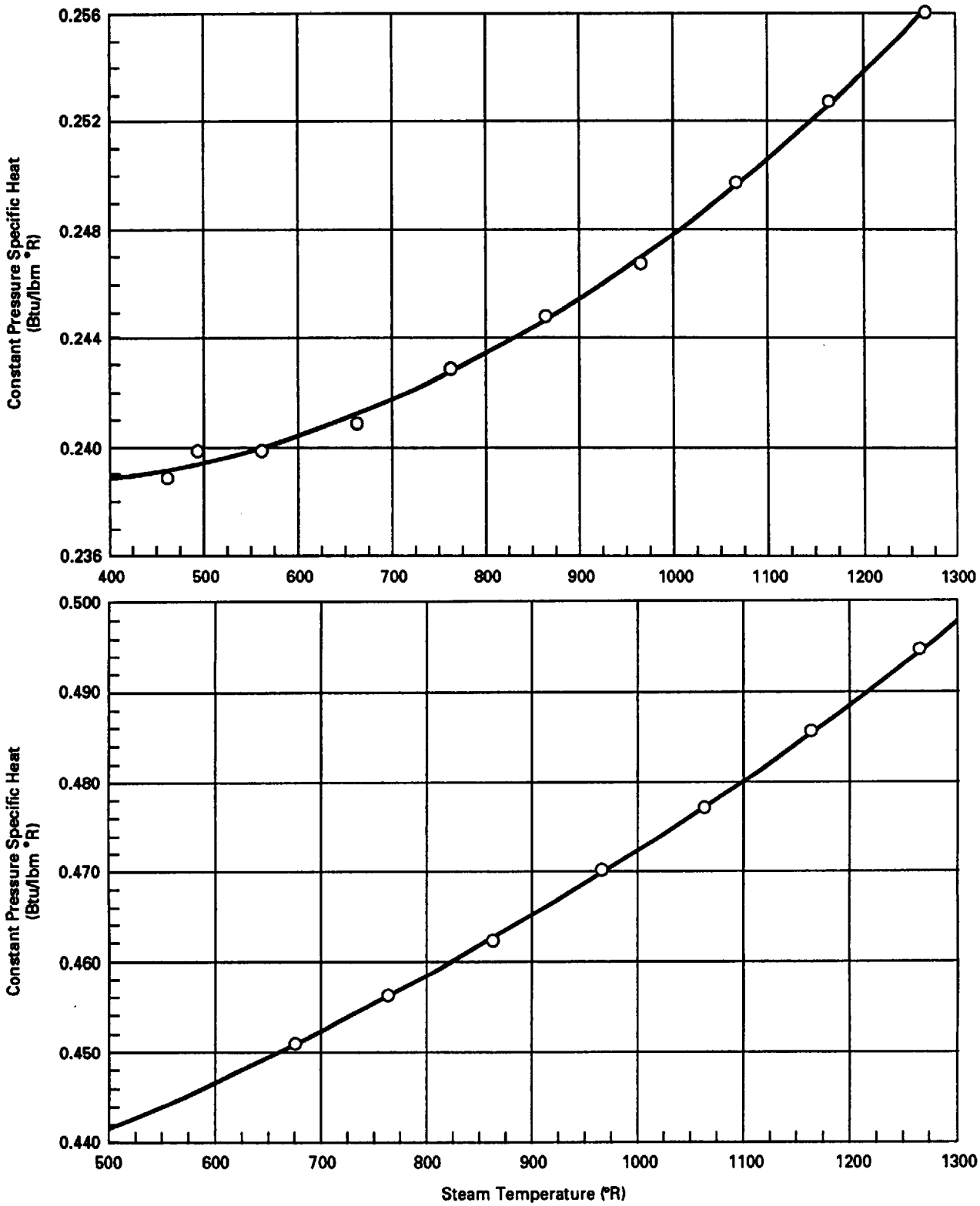

FIG. C.1(b) IDEAL GAS SPECIFIC HEAT FOR STEAM

Copyright ASME International
Provided by IHS under license with ASME
No reproduction or networking permitted without license from IHS
Not for Resale

SAMPLE CALCULATION C.2
TYPE 2 TEST FOR A CENTRIFUGAL COMPRESSOR USING AN IDEAL GAS

This sample calculation is intended to demonstrate:

(a) Type 2 test
(b) Test gas same as specified gas
(c) Ideal gas
(d) No heat loss to lubricating oil and to ambient
(e) No flow leakages
(f) Centrifugal machine
(g) No flexibility to change compressor speed
(h) Single section machine

The purpose of this calculation is to determine the quantity of gas delivered and the compressor head, pressure rise, efficiency, and shaft input power.

Paragraph 3.11.4 of the Code requires that when a test is only to verify a single specified condition, the test shall consist of two test points which bracket the specified capacity. The calculations demonstrated in this sample calculation would be used on both of these bracketing points.

Description of Test Installation (see para. 6.2.2)

(a) Type of compressor — centrifugal
(1) type of impellers — shrouded
(2) number of stages — single section, ten stages
(3) arrangement of casing and piping — not applicable to this sample
(4) pipe sizes; inlet and discharge — inlet pipe is 18 in., schedule 40 (D_i = 16.876 in.); discharge pipe is 10 in., schedule 40 (D_d = 10.020 in.)
(5) arrangement of intercoolers, if used — no intercooler
(6) impeller diameter and blade tip widths — impeller diameters $D_1 = D_2 = D_3 = D_4 = D_5 = D_6$ = 20 in. $D_7 = D_8 = D_9 = D_{10}$ = 18.0 in.; first stage impeller tip width = b = 1.5 in.

(b) Description of lubricating system and lubricant properties — Lubricating system oil flow rate is 4 gpm per bearing for a total flow rate of 8 gpm. Oil density is 55.6 lbm/ft^3 so the oil flow rate is 59.5 lbm/min [8 gpm/(7.48 gal/ft^3) × 55.6 lbm ft^3]. Oil has constant pressure specific heat of c_p = 0.462 Btu/lbm °R.

(c) Type of shaft seals — Not applicable to sample
(d) Type and arrangements of driver; turbine direct connected, motor direct connected, motor and gear, etc. — Not applicable to sample
(e) Description of compressor cooling system and coolant properties — No cooling system

Simplifying Assumptions for This Sample

(a) The gas (air) may be treated as an ideal gas with a constant specific heat (evaluated at the average of the inlet and discharge temperatures).

Specified Operating Conditions (see para. 6.2.3)

(a) Air with constant pressure specific heats of dry air and water vapor given in Fig. C.1, MW_{da} = 28.97 and MW_w = 18.02
(b) Inlet gas state

Copyright ASME International
Provided by IHS under license with ASME
No reproduction or networking permitted without license from IHS
Not for Resale

(1) $p_{static\ i}$ = 7.50 psia at inlet flange
(2) $T_{static\ dbi}$ = 600.0 °R at inlet flange
(3) inlet densities; to be calculated
(4) RH_{inlet} = 50.0 %

(c) Gas flow rate
(1) inlet mass flow rate = discharge mass flow rate = w = 17,300 lbm/hr = 288.3 lbm/min
(2) inlet and discharge volume flow rates have to be determined
(3) capacity has to be determined

(d) Discharge static pressure = 48.00 psia at discharge flange
(e) Compressor coolant not applicable
(f) N = 10,000 rpm
(g) Compressor internal roughness = ϵ = 0.00012 in.

Expected Performance at Specified Operating Conditions (see para. 6.2.4)
(a) Developed polytropic head = 88200 ft · lbf/lbm (based on total conditions)
(b) Efficiency (polytropic) = n_p = 0.82
(c) Power requirement = P_{sh} = 1025 hp
(d) Discharge total temperature (The discharge static temperature is assumed given as 1103°R.)

The following preliminary calculations establish the given specified operating conditions in a form convenient for the Code calculations.

(a) Partial pressure of water vapor is found using the steam tables: [Ref. (D.20)]

$$(p_{wi})_{sp} = RH(p_{sat})_{140.3°F} = 0.500\ (2.912\ \text{psia}) = 1.456\ \text{psia}$$

(b) Air humidity ratio at inlet flange [Ref. (D.20)]

$$(HR_i)_{sp} = \left(0.6220\ \frac{p_{wi}}{p_i - p_{wi}}\right)_{sp}$$

$$= \frac{\left(0.6220\ \frac{\text{lbm } w}{\text{lbm } da}\right)(1.456\ \text{psia})}{(7.50 - 1.456)\ \text{psia}}$$

$$= \left(0.1489\ \frac{\text{lbm } w}{\text{lbm } da}\right)\left(\frac{\text{lbmole } w}{18.02\ \text{lbm } w}\right)\left(\frac{28.97\ \text{lbm } da}{\text{lbmole } da}\right)$$

$$= 0.2408\ \frac{\text{lbmole } w}{\text{lbmole } da}$$

(c) Air molecular weight [Ref. (D.20)]

$$(MW_a)_{sp} = \frac{\text{mole } da\ (MW_{da}) + \text{mole } w\ (MW_w)}{\text{mole } da + \text{mole } w}$$

$$= \frac{1.000\ \text{lbmole } da\left(28.97\ \frac{\text{lbm } da}{\text{lbmole } da}\right) + 0.2408\ \text{lbmole } w\left(18.02\ \frac{\text{lbm } w}{\text{lbmole } w}\right)}{1.000\ \text{lbmole } da + 0.2408\ \text{lbmole } w}$$

$$= 26.84\ \frac{\text{lbm}}{\text{lbmole}}$$

Copyright ASME International
Provided by IHS under license with ASME
No reproduction or networking permitted without license from IHS
Not for Resale

(d) Air specific heat at constant pressure is found using dry air and steam properties. The specific heat at constant pressure for both the dry air (*da*) and water vapor (*w*) are given in Sample Calculation C.1. (Fig. C.1)

$$(c_p)_{sp} = \frac{\text{mass } da\ (c_{pda}) + \text{mass } w\ (c_{pw})}{\text{mass } da + \text{mass } w}$$

$$(c_{p_i})_{sp} = \frac{1.000 \text{ lbm } da \left(0.240 \frac{\text{Btu}}{\text{lbm } da\ °\text{R}}\right) + 0.1498 \text{ lbm } w \left(0.448 \frac{\text{Btu}}{\text{lbm } w\ °\text{R}}\right)}{1.000 \text{ lbm } da + 0.1498 \text{ lbm } w}$$

$$= 0.267 \frac{\text{Btu}}{\text{lbm } °\text{R}}$$

$$(c_{p_d})_{sp} = \frac{1.000 \text{ lbm } da \left(0.251 \frac{\text{Btu}}{\text{lbm } da\ °\text{R}}\right) + 0.1498 \text{ lbm } w \left(0.480 \frac{\text{Btu}}{\text{lbm } w\ °\text{R}}\right)}{1.000 \text{ lbm } da + 0.1498 \text{ lbm } w}$$

$$= 0.281 \frac{\text{Btu}}{\text{lbm } °\text{R}}$$

(e) Air specific heat ratio

$$k_{sp} = \left(\frac{c_p}{c_w}\right)_{sp} = \left(\frac{c_p}{c_p - R}\right)_{sp}$$

$$(k_i)_{sp} = \frac{0.267 \frac{\text{Btu}}{\text{lbm } °\text{R}}}{\left(0.267 \frac{\text{Btu}}{\text{lbm } °\text{R}}\right) - \left(1.986 \frac{\text{Btu}}{\text{lbmole } °\text{R}}\right)\left(\frac{\text{lbmole}}{26.4 \text{ lbm}}\right)} = 1.383$$

$$(k_d)_{sp} = \frac{0.281 \frac{\text{Btu}}{\text{lbm } °\text{R}}}{\left(0.281 \frac{\text{Btu}}{\text{lbm } °\text{R}}\right) - \left(1.986 \frac{\text{Btu}}{\text{lbmole } °\text{R}}\right)\left(\frac{\text{lbmole}}{26.84 \text{ lbm}}\right)} = 1.357$$

(f) The inlet flange kinetic viscosity is found from Ref. (D.20) and is assumed to be that of dry air at the inlet pressure and temperature

$$(\nu_i)_{sp} = 4.00 \times 10^4 \frac{\text{ft}^2}{\text{sec}}$$

Copyright ASME International
Provided by IHS under license with ASME
No reproduction or networking permitted without license from IHS
Not for Resale

(g) Static specific volume at inlet and discharge flanges is found using the ideal gas law

$$(v_{\text{static } i})_{sp} = \left(\frac{RT_{\text{static } db}}{p_{\text{static}}}\right)_{sp}$$

$$(v_{\text{static } i})_{sp} = \frac{\left(\frac{1545 \text{ ft lbf}}{\text{lbmole °R}}\right)\left(\frac{\text{lbmole}}{26.84 \text{ lbm}}\right)(600.0 \text{ °R})}{\left(7.50 \frac{\text{lbf}}{\text{in}^2}\right)\left(144 \frac{\text{in}^2}{\text{ft}^2}\right)} = 31.98 \frac{\text{ft}^3}{\text{lbm}}$$

$$(v_{\text{static } d})_{sp} = \frac{\left(\frac{1545 \text{ ft lbf}}{\text{lbmole °R}}\right)\left(\frac{\text{lbmole}}{26.84 \text{ lbm}}\right)(1103.0 \text{ °R})}{\left(48.00 \frac{\text{lbf}}{\text{in}^2}\right)\left(144 \frac{\text{in}^2}{\text{ft}^2}\right)} = 9.186 \frac{\text{ft}^3}{\text{lbm}}$$

(h) Average fluid velocity at inlet and discharge flanges (see para. 5.4.3.1)

$$V_{sp} = \left(\frac{\frac{w}{60}}{\rho A}\right)_{sp} = \left(\frac{w\, V_{\text{static}}}{A\, 60}\right)_{sp}$$

$$(V_i)_{sp} = \frac{\left(17{,}300 \frac{\text{lbm}}{\text{hr}}\right)\left(\frac{1}{3600} \frac{\text{hr}}{\text{sec}}\right)\left(31.98 \frac{\text{ft}^3}{\text{lbm}}\right)}{\frac{\pi}{4}\left(\frac{16.876}{12} \text{ ft}\right)^2} = 98.94 \frac{\text{ft}}{\text{sec}}$$

$$(V_d)_{sp} = \frac{\left(17{,}300 \frac{\text{lbm}}{\text{hr}}\right)\left(\frac{1}{3600} \frac{\text{hr}}{\text{sec}}\right)\left(9.186 \frac{\text{ft}^3}{\text{lbm}}\right)}{\frac{\pi}{4}\left(\frac{10.020}{12} \text{ ft}\right)^2} = 80.61 \frac{\text{ft}}{\text{sec}}$$

Copyright ASME International
Provided by IHS under license with ASME
No reproduction or networking permitted without license from IHS
Not for Resale

(i) Fluid Mach number at inlet and discharge flanges (see para. 5.4.2.5)

$$M_{sp} = \left(\frac{V}{\sqrt{kg_cRT}}\right)_{sp}$$

$$(M_i)_{sp} = \frac{98.94 \frac{\text{ft}}{\text{sec}}}{\sqrt{1.383 \left(32.174 \frac{\text{ft lbm}}{\text{lbf sec}^2}\right)\left(1545 \frac{\text{ft lb}}{\text{lbmole °R}}\right)\left(\frac{\text{lbmole}}{26.84 \text{ lbm}}\right)(600.0 \text{ °R})}} = 0.0798$$

$$(M_d)_{sp} = \frac{80.61 \frac{\text{ft}}{\text{sec}}}{\sqrt{1.357 \left(32.174 \frac{\text{ft lbm}}{\text{lbf sec}^2}\right)\left(1545 \frac{\text{ft lb}}{\text{lbmole °R}}\right)\left(\frac{\text{lbmole}}{26.84 \text{ lbm}}\right)(1103.0 \text{ °R})}} = 0.0484$$

(j) Total temperature at inlet and discharge flanges is found using the energy equation for an adiabatic process (see Eq. [5.4.6])

$$T_{sp} = \left(T_{\text{static } db} + \frac{V^2}{2 J g_c c_p}\right)_{sp}$$

$$(T_i)_{sp} = 600.0 \text{ °R} + \frac{\left(98.94 \frac{\text{ft}}{\text{sec}}\right)^2}{2\left(778.17 \frac{\text{ft lbf}}{\text{Btu}}\right)\left(32.174 \frac{\text{ft lbm}}{\text{lbf sec}^2}\right)\left(0.267 \frac{\text{Btu}}{\text{lbm °R}}\right)} = 600.7 \text{ °R}$$

$$(T_d)_{sp} = 1103.0 \text{ °R} + \frac{\left(80.61 \frac{\text{ft}}{\text{sec}}\right)^2}{2\left(778.17 \frac{\text{ft lbf}}{\text{Btu}}\right)\left(32.174 \frac{\text{ft lbm}}{\text{lbf sec}^2}\right)\left(0.281 \frac{\text{Btu}}{\text{lbm °R}}\right)} = 1103.46 \text{ °R}$$

(k) Since the Fluid Mach number is less than 0.2, the total pressure may be calculated according to the simplified Eq. [5.4.4]

Copyright ASME International
Provided by IHS under license with ASME
No reproduction or networking permitted without license from IHS
Not for Resale

$$p_{sp} = (p_{static})_{sp} + \left(\frac{V^2}{2\, V_{static}\, g_c}\right)_{sp}$$

$$(p_i)_{sp} = 7.50 \text{ psia} + \frac{\left(98.94 \frac{\text{ft}}{\text{sec}}\right)^2}{2\left(31.98 \frac{\text{ft}^3}{\text{lbf}}\right)\left(32.174 \frac{\text{ft lbm}}{\text{lbf sec}^2}\right)\left(144 \frac{\text{in}^2}{\text{ft}^2}\right)} = 7.53 \text{ psia}$$

$$(p_d)_{sp} = 48.00 \text{ psia} + \frac{\left(80.61 \frac{\text{ft}}{\text{sec}}\right)^2}{2\left(9.186 \frac{\text{ft}^3}{\text{lbf}}\right)\left(32.174 \frac{\text{ft lbm}}{\text{lbf sec}^2}\right)\left(144 \frac{\text{in}^2}{\text{ft}^2}\right)} = 48.08 \text{ psia}$$

(l) Total density at the inlet and discharge flanges is found using the ideal gas law

$$(\rho_i)_{sp} = \left(\frac{p_i}{RT_i}\right)_{sp} = \frac{\left(7.53 \frac{\text{lbf}}{\text{in}^2}\right)\left(144 \frac{\text{in}^2}{\text{ft}^2}\right)}{\left(1545 \frac{\text{ft lbf}}{\text{lbmole °R}}\right)\left(\frac{1}{26.84} \frac{\text{lbmole}}{\text{lbm}}\right)(600.7 \text{ °R})} = 0.03136 \frac{\text{lbm}}{\text{ft}^3}$$

$$(\rho_d)_{sp} = \left(\frac{p_d}{RT_d}\right)_{sp} = \frac{\left(48.08 \frac{\text{lbf}}{\text{in}^2}\right)\left(144 \frac{\text{in}^2}{\text{ft}^2}\right)}{\left(1545 \frac{\text{ft lbf}}{\text{lbmole °R}}\right)\left(\frac{1}{26.84} \frac{\text{lbmole}}{\text{lbm}}\right)(1103.5 \text{ °R})} = 0.1090 \frac{\text{lbm}}{\text{ft}^3}$$

(m) The sum of the squares of the blade tip speeds is

$$\left[\sum_{j=1}^{10} U_j^2\right]_{sp} = \left[\frac{N^2}{4}\sum_{j=1}^{10} D_j^2\right]_{sp}$$

$$= \frac{\left(10^4 \frac{\text{rev}}{\text{min}}\right)^2 [6\ (2 \text{ in})^2 + 4\ (18 \text{ in})^2]\left(2\,\pi \frac{\text{rad}}{\text{rev}}\right)^2}{4\left(12 \frac{\text{in}}{\text{ft}}\right)^2\left(60 \frac{\text{sec}}{\text{min}}\right)^2} = 7.037 \times 10^6 \frac{\text{ft}^2}{\text{sec}^2}$$

Mean Observations Derived from Test Data

The test is to be run with air at atmospheric pressure and temperature as the inlet pressure and temperature. These give $(p_{static\ i})_t = 14.10$ psia and $(T_{static\ dbi})_t = 560.0$ °R. Both the specified gas and the test gas are assumed ideal gases. Assuming equality of the (total) volume ratio between the test and specified operating conditions gives

Copyright ASME International
Provided by IHS under license with ASME
No reproduction or networking permitted without license from IHS
Not for Resale

$$\left[\left(\frac{p_d}{p_i}\right)^{\frac{1}{n}}\right]_t = \left(\frac{v_i}{v_d}\right)_t = \left(\frac{v_i}{v_d}\right)_{sp} = \left[\left(\frac{p_d}{p_i}\right)^{\frac{1}{n}}\right]_t$$

Assuming equality of the polytropic efficiencies between the test and specified conditions gives

$$(\eta_p)_t = (\eta_p)_{sp}$$

or

$$\left[\left(\frac{n}{n-1}\right)\left(\frac{k}{k-1}\right)\right]_t = \left[\left(\frac{n}{n-1}\right)\left(\frac{k}{k-1}\right)\right]_{sp}$$

Since the same gas is used in the test and at the specified operating conditions, assume $k_t = k_{sp}$. Then,

$(n)_t = (n)_{sp}$, and

$$(p_d)_t = (p_i)_t\left(\frac{p_d}{p_i}\right)_{sp} \simeq 14.40 \text{ psia} \frac{48.0 \text{ psia}}{7.53 \text{ psia}} = 90.0 \text{ psia}$$

as the approximate (total) discharge pressure for the test.

The test speed is found by assuming equality of the polytropic work coefficient between the test and the specified operating condition to give

$$(\mu_p)_t = (\mu_p)_{sp}$$

$$\left(\frac{RT_i}{\Sigma U^2}\right)_t = \left(\frac{RT_i}{\Sigma\ U^2}\right)_{sp}$$

or,

$$N_t = N_{sp}\sqrt{\frac{(T_i)_t}{(T_i)_{sp}}}$$

which can be obtained from equality of Machine Mach numbers.

The numerical values give

$$N_t \simeq 10{,}000 \text{ rpm} \sqrt{\frac{540.0\ °\text{R}}{600.7\ °\text{R}}} = 9841 \text{ rpm}$$

as the approximate appropriate test speed. Not that no Reynolds number correction (as used later in converting the test data to the specified operating condition) is used in this estimation of the test speed. Also, note that the Code speed rule (para. 5.3.2) reduces to the equality of Machine Mach numbers between the test and the specified operating conditions for ideal gases with equal values of the specific heat ratios. See para. 6.2.7.

(a) Test run number 4

(b) Duration of test = 40 minutes

(c) Compressor speed = 9,500 rpm

(d) Inlet temperature = $T_{\text{static } dbi}$ = 540.0 °R

Copyright ASME International
Provided by IHS under license with ASME
No reproduction or networking permitted without license from IHS
Not for Resale

(e) Barometer reading = 14.10 psia
(f) Ambient temperature at barometer = 540.0 °R
(g) Inlet static pressure = $p_{\text{static } i}$ = 14.10 psia
(h) Dry bulb temperature at inlet flange = $T_{\text{static } dbi}$ = 540.0 °R
(i) Wet bulb temperature at inlet flange = $T_{\text{static } wbi}$ = 530.0 °R
(j) Dew point at inlet flange = 525.1 °R
(k) Gas density not measured
(l) MW_{da} = 28.97 and MW_w = 18.02
(m) Discharge static pressure = $P_{\text{static } d}$ = 99.6 psia
(n) Discharge static temperature = $T_{\text{static } dbd}$ = 1042.2 °R
(o) Mass flow rate = 36,500 lbm/hr
(p) to (w) Not applicable to this sample
(x) Shaft power input = P_{sh} = 1851 hp (determined by measuring shaft input torque of speed)
(y) Shaft torque = 1023 ft · lb
(z) Lubricating system oil flow rate is 19.3 gpm. The oil density is 55.45 lbm/ft^3 so the oil flow rate is 143.1 lbm/min (19.3 × 55.45/7.48). The oil has constant pressure specific heat c_p = 0.462 Btu/lbm °R.
(aa) Lubricant inlet temperature = $T_{o\,\text{in}}$ = 525.0 °R
(bb) Lubricant outlet temperature = $T_{o\,\text{out}}$ = 568.5 °R
(cc) to (ee) Casing heat loss = 6740 Btu/hr
(ff) Not applicable

Computed Results for Test Operating Conditions (similar to para. 6.2.8)

The previous test data is converted into a form convenient for Code calculations.

(a) The air humidity ratio of the inlet air is found using air and steam properties [Ref. (D.20)]

$$(HR_{wbi})_t = 0.6220\,\frac{P_{sat'}\ 70.3\ °\text{F}}{P_{\text{static } i} - P_{sat'}\ 70.3\ °\text{F}}$$

$$= 0.6220\,\frac{0.3667\ \text{psia}}{14.10\ \text{psia} - 9.3667\ \text{psia}} = 0.01661\,\frac{\text{lbm } w}{\text{lbm } da}$$

$$(HR_{dbi})_t = \left[\frac{c_{pdai}\,(T_{dbi} - T_{wbi}) + HR_{wbi}\,(h_{gwbi} - h_{fwbi})}{h_{gdbi} - h_{fwbi}}\right]_t$$

$$= \frac{0.240\,\frac{\text{Btu}}{\text{lbm } da\ °\text{R}}\,(540.0 - 530.0)\ R + \left(0.01661\,\frac{\text{lbm } w}{\text{lbm } da}\right)(1092.2 - 38.35)\,\frac{\text{Btu}}{\text{lbm } w}}{(1095.5 - 38.35)\,\frac{\text{Btu}}{\text{lbm } w}}$$

$$= \left(0.01881\,\frac{\text{lbm } w}{\text{lbm } da}\right)\left(\frac{1}{18.02}\,\frac{\text{lbmole } w}{\text{lbm } w}\right)\left(28.97\,\frac{\text{lbm } da}{\text{lbmole } da}\right)$$

$$= 0.03024\,\frac{\text{lbmole } w}{\text{lbmole } da}$$

Copyright ASME International
Provided by IHS under license with ASME
No reproduction or networking permitted without license from IHS
Not for Resale

(b) Air molecular weight [Ref. (D.20)]

$$(MW_a)_t = \left[\frac{\text{mole } da\ (MW_{da}) + \text{mole } w\ (MW_w)}{\text{mole } da + \text{mole } w}\right]_t$$

$$= \frac{1.000\ \text{lbmole } da \left(28.97 \frac{\text{lbm } da}{\text{lbmole } da}\right) + 0.03024\ \text{lbmole } w \left(18.02 \frac{\text{lbm } w}{\text{lbmole } w}\right)}{1.00\ \text{lbmole } da + 0.03024\ \text{lbmole } w}$$

$$= 28.65 \frac{\text{lbm}}{\text{lbmole}}$$

(c) Air specific heat is found using dry air and steam properties

$$(c_p)_t = \left[\frac{\text{mass } da\ (c_{pda}) + \text{mass } c\ (w_{pw})}{\text{mass } da + \text{mass } w}\right]_t$$

$$(c_{p_i})_t = \frac{1.000\ \text{lbm } da \left(0.240 \frac{\text{Btu}}{\text{lbm } da\ °\text{R}}\right) + 0.01881\ \text{lbm} \left(0.447 \frac{\text{Btu}}{\text{lbm } w\ °\text{R}}\right)}{1.000\ \text{lbm } da + 0.01881\ \text{lnm } w}$$

$$= 0.244 \frac{\text{Btu}}{\text{lbm } °\text{R}}$$

$$(c_{p_d})_t = \frac{1.000\ \text{lbm } da \left(0.249 \frac{\text{Btu}}{\text{lbm } da\ °\text{R}}\right) + 0.01881\ \text{lbm} \left(0.475 \frac{\text{Btu}}{\text{lbm } w\ °\text{R}}\right)}{1.000\ \text{lbm } da + 0.01881\ \text{lnm } w}$$

$$= 0.253 \frac{\text{Btu}}{\text{lbm } °\text{R}}$$

Average specific heat

$$(c_p)_t = \left(\frac{c_{p_i} + c_{p_d}}{2}\right)_t = \frac{0.244 + 0.253}{2} \frac{\text{Btu}}{\text{lbm } °\text{R}} = 0.249 \frac{\text{Btu}}{\text{lbm } °\text{R}}$$

Copyright ASME International
Provided by IHS under license with ASME
No reproduction or networking permitted without license from IHS
Not for Resale

(d) Air specific heat ratio

$$k_t = \left(\frac{c_p}{c_v}\right)_t = \left(\frac{c_p}{c_p - R}\right)_t$$

$$(k_i)_t = \frac{0.244 \dfrac{\text{Btu}}{\text{lbm °R}}}{\left(0.244 \dfrac{\text{Btu}}{\text{lbm °R}}\right) - \left(0.1986 \dfrac{\text{Btu}}{\text{lbmole °R}}\right)\left(\dfrac{1}{28.65} \dfrac{\text{lbmole}}{\text{lbm}}\right)} = 1.397$$

$$(k_d)_t = \frac{0.253 \dfrac{\text{Btu}}{\text{lbm °R}}}{\left(0.253 \dfrac{\text{Btu}}{\text{lbm °R}}\right) - \left(0.1986 \dfrac{\text{Btu}}{\text{lbmole °R}}\right)\left(\dfrac{1}{28.65} \dfrac{\text{lbmole}}{\text{lbm}}\right)} = 1.37$$

(e) The inlet flange kinematic viscosity is found from Ref. (D.20) and is assumed to be that of dry air at atmospheric pressure and the existing temperature

$$(\nu_i)_t = 1.70 \times 10^{-4} \frac{\text{ft}^2}{\text{sec}}$$

(f) Static specific volume at inlet and discharge flanges is found using the ideal gas law

$$(v_{\text{static}})_t = \left[\frac{RT_{\text{static } db}}{p_{\text{static}}}\right]_t$$

$$(v_{\text{static } i})_t = \frac{\left(1545 \dfrac{\text{ft lbf}}{\text{lbmole °R}}\right)\left(\dfrac{1}{28.65} \dfrac{\text{lbmole}}{\text{lbm}}\right) 540.0 \text{ °R}}{\left(14.10 \dfrac{\text{lb}}{\text{in}^2}\right)\left(144 \dfrac{\text{in}^2}{\text{ft}^2}\right)} = 14.34 \frac{\text{ft}^3}{\text{lbm}}$$

$$(v_{\text{static } d})_t = \frac{\left(1545 \dfrac{\text{ft lbf}}{\text{lbmole °R}}\right)\left(\dfrac{1}{28.65} \dfrac{\text{lbmole}}{\text{lbm}}\right) 1042.3 \text{ °R}}{\left(99.6 \dfrac{\text{lb}}{\text{in}^2}\right)\left(144 \dfrac{\text{in}^2}{\text{ft}^2}\right)} = 3.919 \frac{\text{ft}^3}{\text{lbm}}$$

(g) Fluid velocity at inlet and discharge flanges (see para. 5.4.3.1)

Copyright ASME International
Provided by IHS under license with ASME
No reproduction or networking permitted without license from IHS
Not for Resale

$$V_t = \left[\frac{\frac{w}{60}}{\rho A}\right]_t = \left[\frac{w\, v_{static}}{A\,(60)}\right]_t$$

$$(V_i)_t = \frac{\left(36{,}500\ \frac{\text{lbm}}{\text{hr}}\right)\left(14.34\ \frac{\text{ft}^3}{\text{lbm}}\right)}{\frac{\pi}{4}\left(\frac{16.876}{12}\ \text{ft}\right)^2\left(3600\ \frac{\text{sec}}{\text{hr}}\right)} = 93.60\ \frac{\text{ft}}{\text{sec}}$$

$$(V_d)_t = \frac{\left(36{,}500\ \frac{\text{lbm}}{\text{hr}}\right)\left(3.919\ \frac{\text{ft}^3}{\text{lbm}}\right)}{\frac{\pi}{4}\left(\frac{10.020}{12}\ \text{ft}\right)^2\left(3600\ \frac{\text{sec}}{\text{hr}}\right)} = 72.56\ \frac{\text{ft}}{\text{sec}}$$

(h) Fluid Mach numbers at inlet and discharge flanges (see para. 5.4.2.5)

$$M_t = \left(\frac{V}{\sqrt{kg_cRT}}\right)_t$$

$$(M_i)_t = \frac{93.60\ \frac{\text{ft}}{\text{sec}}}{\sqrt{1.397\left(32.174\ \frac{\text{ft lbm}}{\text{lbf sec}^2}\right)\left(1545\ \frac{\text{ft lb}}{\text{lbmole °R}}\right)\left(\frac{1}{28.65}\ \frac{\text{lbmole}}{\text{lbm}}\right)(540.0\ \text{°R})}} = 0.0818$$

$$(M_d)_t = \frac{72.56\ \frac{\text{ft}}{\text{sec}}}{\sqrt{1.377\left(32.174\ \frac{\text{ft lbm}}{\text{lbf sec}^2}\right)\left(1545\ \frac{\text{ft lb}}{\text{lbmole °R}}\right)\left(\frac{1}{28.65}\ \frac{\text{lbmole}}{\text{lbm}}\right)(1042.2\ \text{°R})}} = 0.0459$$

(i) Total temperature at inlet and discharge flanges is found using the energy equation for an adiabatic process

$$T_t = \left(T_{\text{static } db} + \frac{V^2}{2c_pJg_c}\right)_t$$

$$(T_i)_t = 540.0\ \text{°R} + \frac{\left(93.60\ \frac{\text{ft}}{\text{sec}}\right)^2}{2\left(0.244\ \frac{\text{Btu}}{\text{lbm °R}}\right)\left(778.17\ \frac{\text{ft lbf}}{\text{Btu}}\right)\left(32.174\ \frac{\text{ft lbm}}{\text{lbf sec}^2}\right)} = 540.7\ \text{°R}$$

Copyright ASME International
Provided by IHS under license with ASME
No reproduction or networking permitted without license from IHS
Not for Resale

$$(T_d)_t = 1042.2\ °R + \frac{\left(72.56\ \frac{ft}{sec}\right)^2}{2\left(0.253\ \frac{Btu}{lbm\ °R}\right)\left(778.17\ \frac{ft\ lbf}{Btu}\right)\left(32.174\ \frac{ft\ lbm}{lbf\ sec^2}\right)} = 1042.6\ °R$$

(j) Since the Fluid Mach number is less than 0.2, the total pressure may be calculated according to the simplified method of Eq. [5.4.4]

$$p_t = (p_{static})_t + \left(\frac{V^2}{2v_{static}g_c}\right)_t$$

$$(p_i)_t = 14.10\ psia + \frac{\left(93.60\ \frac{ft}{sec}\right)^2}{2\left(14.34\ \frac{ft^3}{lbm}\right)\left(32.174\ \frac{ft\ lbm}{lbf\ sec^2}\right)\left(144\ \frac{in^2}{ft^2}\right)} = 14.17\ psia$$

$$(p_d)_t = 99.6\ psia + \frac{\left(72.56\ \frac{ft}{sec}\right)^2}{2\left(3.919\ \frac{ft^3}{lbm}\right)\left(32.174\ \frac{ft\ lbm}{lbf\ sec^2}\right)\left(144\ \frac{in^2}{ft^2}\right)} = 99.74\ psia$$

(k) Total density at the inlet and discharge flanges is found using the ideal gas law

$$(\rho_i)_{sp} = \left(\frac{p_i}{RT_i}\right)_t = \frac{\left(14.17\ \frac{lbf}{in^2}\right)\left(144\ \frac{in^2}{ft^2}\right)}{\left(1545\ \frac{ft\ lbf}{lbmole\ °R}\right)\left(\frac{1}{28.65}\ \frac{lbmole}{lbm}\right)\left(540.7\ °R\right)} = 0.06993\ \frac{lbm}{ft^3}$$

$$(\rho_d)_{sp} = \left(\frac{p_i}{RT_i}\right)_t = \frac{\left(99.74\ \frac{lbf}{in^2}\right)\left(144\ \frac{in^2}{ft^2}\right)}{\left(1545\ \frac{ft\ lbf}{lbmole\ °R}\right)\left(\frac{1}{28.65}\ \frac{lbmole}{lbm}\right)\left(1042.6\ °R\right)} = 0.2555\ \frac{lbm}{ft^3}$$

(l) The sum of the squares of the blade tip speeds is

$$\left[\sum_{j=1}^{N} U_j^2\right]_t = \left[\frac{N^2}{4}\sum_{j=1}^{N} D_j^2\right]_t = \frac{\left(9{,}500\ \frac{rev}{min}\right)^2 [6\ (20\ in)^2 + 4\ (18\ in)^2]\left(2\pi\ \frac{rad}{rev}\right)^2}{4\left(12\ \frac{in}{ft}\right)^2\left(60\ \frac{sec}{min}\right)^2} = 6.35 \times 10^6\ \frac{ft^2}{sec^2}$$

(m) The shaft power was measured by the shaft power method to be $(P_{sh})_t = 1851$ hp (shaft power method)

Copyright ASME International
Provided by IHS under license with ASME
No reproduction or networking permitted without license from IHS
Not for Resale

The shaft power can also be calculated from the gas power using the heat balance method and Eq. [5.5.14]

$$(P_{sh})_t = (P_g)_t + P_{\text{parasitic}}$$

Equations [5.4.17] and [5.4.18] show the parasitic losses to be mechanical losses. Also, using Eq. [5.4.13] gives

$$(P_{sh})_t = (wc_p)_t\,(T_d - T_i)_t + Q_r + w_o\,c_{po}\,\Delta T_o$$

$$(p_{sh})_t = \frac{\left(36{,}500\ \frac{\text{lbm}}{\text{hr}}\right)\left(0.2459\ \frac{\text{ft lbf}}{\text{lbm °R}}\right)(1042.6 - 540.7)\ °\text{R}}{\left(42.44\ \frac{\text{Btu}}{\text{min hp}}\right)\left(60\ \frac{\text{min}}{\text{hr}}\right)} + \frac{6740\ \frac{\text{Btu}}{\text{hr}}}{\left(42.44\ \frac{\text{Btu}}{\text{min hp}}\right)\left(60\ \frac{\text{min}}{\text{hr}}\right)}$$

$$= \frac{\left(143.1\ \frac{\text{lbm}}{\text{min}}\right)\left(0.462\ \frac{\text{Btu}}{\text{lbm °R}}\right)(568.5 - 525.0)\ °\text{R}}{\left(42.44\ \frac{\text{Btu}}{\text{min}}{\text{hp}}\right)}$$

$$= (1791.4 + 2.65 + 67.8)\ \text{hp}$$

$$= 1862\ \text{hp (heat balance method)}$$

(n) The gas power can be calculated from the heat balance method as done above to get

$$(P_g)_t = (w\,c_p)_t\,(T_d - T_i)_t + Q_r$$
$$= (1791\ 4 + 2.65)\ \text{hp}$$
$$= 1794\ \text{hp (heat balance method)}$$

The gas power can also be calculated from the shaft power using the shaft power method

$$(P_g)_t = (P_{sh})_t - w_o\,c_{po}\,\Delta T_o$$
$$= (1862 - 67.8)\ \text{hp}$$
$$= 1794\ \text{hp (shaft power method)}$$

Check for a Type 1 Test

The above test does not qualify as a Type 1 test due to the large differences in the inlet pressures. To formalize this observation, the inlet pressure departure is

$$\frac{(p_i)_{sp} - (p_i)_t}{(p_i)_{sp}} \times 100 = \frac{7.53 - 14.16}{7.53} \times 100 = -88.0\%$$

which is outside the range of the Table 3.1 limit of 5%; therefore, the test is not a Type 1 test. Therefore, we must conduct a Type 2 test; however, we will verify that this is a Type 2 test, i.e., satisfies the Table 3.2 requirements.

Copyright ASME International
Provided by IHS under license with ASME
No reproduction or networking permitted without license from IHS
Not for Resale

Computed Test Dimensionless Parameters (similar to para. 6.2.9)

The dimensionless parameters which form the basis for the conversion from test data to specified operating conditions are calculated in this section.

(a) Polytropic efficiency is found as follows:

Average specific heat ratio

$$k_t = \left(\frac{c_p}{c_p - R}\right)_t = \frac{0.249 \dfrac{\text{Btu}}{\text{lbm °R}}}{\left(0.249 \dfrac{\text{ft lbf}}{\text{lbm °R}}\right) - \left(1.986 \dfrac{\text{Btu}}{\text{lbmole °R}}\right)\left(\dfrac{1}{28.65} \dfrac{\text{lb mole}}{\text{lbm}}\right)} = 1.386$$

Polytropic exponent (see Eq. [5.1T-5])

$$n_t = \left[\frac{\ln\left(\dfrac{p_d}{p_i}\right)}{\ln\left(\dfrac{v_i}{v_d}\right)}\right]_t = \left[\frac{\ln\left(\dfrac{p_d}{p_i}\right)}{\ln\left(\dfrac{p_d}{p_i}\dfrac{T_i}{T_d}\right)}\right]_t$$

$$= \frac{\ln\left(\dfrac{99.74 \text{ psia}}{14.17 \text{ psia}}\right)}{\ln \dfrac{(99.74 \text{ psia})\ (540.7 \text{ °R})}{(14.17 \text{ psia})\ (1042.6 \text{ °R})}} = 1.507$$

Polytropic efficiency (see Eq. [5.1T-9])

$$(\eta_p)_t = \frac{\left(\dfrac{n}{n-1}\right)_t}{\left(\dfrac{k}{k-1}\right)_t} = \frac{\left(\dfrac{1.507}{0.50755}\right)}{\left(\dfrac{1.386}{0.386}\right)} = 0.828$$

(b) Flow coefficient (see Eq. [5.1T-1])

$$\phi_t = \left(\frac{w}{2\pi\rho_i N D^3}\right)_t$$

$$= \frac{\left(36{,}500 \dfrac{\text{lbm}}{\text{hr}}\right)\left(\dfrac{\text{rev}}{2\ \pi \text{ rad}}\right)\left(\dfrac{\text{hr}}{60 \text{ min}}\right)}{\left(0.06993 \dfrac{\text{lbm}}{\text{ft}^3}\right)\left(9{,}500 \dfrac{\text{rev}}{\text{min}}\right)\left(\dfrac{20.0}{12} \text{ ft}\right)^3} = 0.03148$$

Copyright ASME International
Provided by IHS under license with ASME
No reproduction or networking permitted without license from IHS
Not for Resale

(c) Polytropic work coefficient (see Eq. [5.1T-4])

$$(\mu_p)_t = \left[\frac{\left(\frac{n}{n-1}\right) RT_i \left[\left(\frac{p_d}{p_i}\right)^{\frac{n-1}{n}} - 1\right]}{\frac{\Sigma U^2}{g_c}}\right]_t$$

$$= \frac{\left(\frac{1.507}{0.507}\right)\left(1545 \frac{\text{ft lbf}}{\text{lbmole °R}}\right)\left(\frac{1}{28.65} \frac{\text{lbmole}}{\text{lbm}}\right)(540.7 \text{ °R})\left[\left(\frac{99.74}{14.17}\right)^{\frac{0.507}{1.507}} - 1\right]}{\left(6.35 \times 10^6 \frac{\text{ft}^2}{\text{sec}^2}\right)\left(\frac{1}{32.174} \frac{\text{lbf sec}^2}{\text{ft lbm}}\right)}$$

$$= 0.4075$$

(d) Total work input coefficient using the shaft power method (see Eqs. [5.4.18] and [5.3T-2])

$$(Q_m)t = w_o c_{po} \Delta T_o = \frac{\left(143.1 \frac{\text{lbm}}{\text{min}}\right)\left(0.462 \frac{\text{Btu}}{\text{lbm °R}}\right)\left(568.5 - 525.0\right) \text{°R}}{\left(42.44 \frac{\text{Btu}}{\text{min hr}}\right)} = 67.8 \text{ hp}$$

$$(\Omega_{sh})_t = \left[\frac{P_{sh} - Q_m}{w \frac{\Sigma U^2}{g_c}}\right]_t = \frac{(1851 \text{ hp} - 67.8 \text{ hp})\left(33{,}000 \frac{\text{ft lbf}}{\text{min hp}}\right)\left(60 \frac{\text{min}}{\text{hr}}\right)}{\left(36{,}500 \frac{\text{lbm}}{\text{hr}}\right)\left(6.35 \times 10^6 \frac{\text{ft}^2}{\text{sec}^2}\right)\left(\frac{1}{32.174} \frac{\text{lbf sec}^2}{\text{ft lbm}}\right)} = 0.4901$$

(e) Total work input coefficient using the heat balance method (see Eq. [5.3T-1])

$$(\Omega_{hb})_t = \frac{\left[c_p (T_d - T_i) + \frac{Q_r}{w}\right] J}{\frac{\Sigma U^2}{g_c}}$$

$$= \frac{\left[\left(0.249 \frac{\text{Btu}}{\text{lbm °R}}\right)(1042.6 - 540.7) \text{°R} + \frac{6740 \frac{\text{Btu}}{\text{hr}}}{36{,}500 \frac{\text{Btu}}{\text{hr}}}\right] \frac{778.16 \text{ ft lb}}{\text{Btu}}}{\left(6.35\ 10^6 \frac{\text{ft}^2}{\text{sec}^2}\right)\left(\frac{1}{32.174} \frac{\text{lbf sec}^2}{\text{ft lbm}}\right)} = 0.4935$$

(f) Work input coefficient (see Eq. [5.2T-2])

$$(\mu_{in})_t = \frac{c_p (T_d - T_i) J}{\frac{\Sigma U^2}{g_c}} = \frac{\left(0.249 \frac{\text{Btu}}{\text{lbm °R}}\right)(1042.6 - 540.6) \text{°R}\left(778.17 \frac{\text{ft lbf}}{\text{Btu}}\right)}{\left(6.35 \times 10^6 \frac{\text{ft}^2}{\text{sec}^2}\right)\left(\frac{1}{32.174} \frac{\text{lbf sec}^2}{\text{ft lbm}}\right)} = 0.4927$$

Copyright ASME International
Provided by IHS under license with ASME
No reproduction or networking permitted without license from IHS
Not for Resale

(g) Volume ratio at stagnation conditions (for information only)

$$\left(\frac{v_i}{v_d}\right)_t = \left(\frac{\rho_d}{\rho_i}\right)_t = \frac{0.2555 \frac{\text{lbm}}{\text{ft}^3}}{0.6993 \frac{\text{lbm}}{\text{ft}^3}} = 3.65$$

Computed Results for Specified Operating Conditions (similar to para. 6.2.11)

The performance at the specified operating conditions is calculated from the test dimensionless parameters. The effect of the difference between test and specified operating condition Reynolds numbers is estimated from the PTC 10 Reynolds number correction.

(a) Discharge total pressure at specified conditions is obtained as follows:

Average specific heat

$$(c_p)_{sp} = \left(\frac{c_{p_i} + c_{p_d}}{2}\right)_{sp} = \frac{0.267 \frac{\text{Btu}}{\text{lbm °R}} + 0.281 \frac{\text{Btu}}{\text{lbm °R}}}{2} = 0.274 \frac{\text{Btu}}{\text{lbm °R}}$$

(The design discharge temperature has been used to estimate c_{p_d}.)

Average specific heat ratio

$$k_{sp} = \left(\frac{c_p}{c_p - R}\right)_{sp} = \frac{0.274 \frac{\text{Btu}}{\text{lbm °R}}}{\left(0.274 \frac{\text{Btu}}{\text{lbm °R}}\right) - \left(1.986 \frac{\text{Btu}}{\text{lbmole °R}}\right)\left(\frac{1}{28.36} \frac{\text{lb mole}}{\text{lbm}}\right)} = 1.370$$

Polytropic efficiency correction is now used to account for the differences in the Machine Reynolds numbers. The Reynolds number limits for this correction are found using Eqs. [5.4.4] and [5.6.1] to [5.6.4]

$$\text{Rem}_{sp} = \left(\frac{UB}{\nu_i}\right)_{sp} = \left(\frac{ND_i b}{2\nu_i}\right)_{sp} = \frac{\left(10{,}000 \frac{\text{rev}}{\text{min}}\right)\left(2\pi \frac{\text{rad}}{\text{rev}}\right)\left(\frac{20}{12} \frac{\text{rad}}{\text{rev}}\right)\left(\frac{1.5}{12}\right) \text{ft}}{2\left(4.00 \times 10^{-4} \frac{\text{ft}^2}{\text{sec}^2}\right)\left(60 \frac{\text{sec}}{\text{min}}\right)} = 2.73 \times 10^5$$

$$\text{Rem}_t = \left(\frac{UB}{\nu_i}\right)_t = \left(\frac{ND_i b}{2\nu_i}\right)_t = \frac{\left(9{,}500 \frac{\text{rev}}{\text{min}}\right)\left(2\pi \frac{\text{rad}}{\text{rev}}\right)\left(\frac{20}{12} \frac{\text{rad}}{\text{rev}}\right)\left(\frac{1.5}{12}\right) \text{ft}}{2\left(1.70 \times 10^{-4} \frac{\text{ft}^2}{\text{sec}^2}\right)\left(60 \frac{\text{sec}}{\text{min}}\right)} = 6.10 \times 10^5$$

$$\frac{\text{Rem}_t}{\text{Rem}_{sp}} = \left[100^{\left(\frac{\text{Rem}}{10^7}\right)^{0.3}_{sp}}\right]^{\pm 1} = \left[100^{\left(\frac{2.75 \times 10^5}{10^7}\right)^{0.3}}\right]^{\pm 1} = 4.775,\ 0.2094$$

Copyright ASME International
Provided by IHS under license with ASME
No reproduction or networking permitted without license from IHS
Not for Resale

or

$$Rem_t < 4.775\ Rem_{sp} = 4.775\ (2.73 \times 10^5) = 1.3 \times 10^6$$

$$Rem_t > 0.2094\ Rem_{sp} = 0.2094\ (2.73 \times 10^5) = 5.72 \times 10^4$$

Since the test Machine Reynolds number (6.10×10^5) falls in the above range, the following Reynolds number correction may be used. The corrected polytropic efficiency for the specified operating condition is related to the test polytropic efficiency by

$$1 - (\eta_p)_{sp} = [1 - (\eta_p)_t] \frac{RA_{sp}}{RA_t} \frac{RB_{sp}}{RB_t}$$

where

$$RC_{sp} = 0.988\ Rem_{sp}^{-0.243} = 0.988\ (2.73 \times 10^5)^{-0.243} = 0.04718$$

$$RC_t = 0.988\ Rem_t^{-0.243} = 0.988\ (6.10 \times 10^5)^{-0.243} = 0.03881$$

$$RA_{sp} = 0.066 + 0.934 \left[\frac{4b \times 10^5}{Rem}\right]_{sp}^{RC_{sp}}$$

$$RA_{sp} = 0.066 + 0.934 \left[\frac{4\ (1.5\ in) \times 10^5}{2.73 \times 10^5}\right]^{0.04718} = 1.0354$$

$$RA_{sp} = 0.066 + 0.934 \left[\frac{4b \times 10^5}{Rem}\right]_{t}^{RC_t}$$

$$RA_{sp} = 0.066 + 0.934 \left[\frac{4\ (1.5\ in) \times 10^5}{6.10 \times 10^5}\right]^{0.03881} = .099940$$

$$RB_{sp} = \frac{\log\left(0.000125 + \frac{13.67}{Rem_{sp}}\right)}{\log\left(\epsilon + \frac{13.67}{Rem_{sp}}\right)}$$

$$= \frac{\log\left(0.000125 + \frac{13.67}{2.73 \times 10^5}\right)}{\log\left(0.00012 + \frac{13.67}{2.73 \times 10^5}\right)} = 0.9967$$

$$RB_t = \frac{\log\left(0.000125 + \frac{13.67}{Rem_t}\right)}{\log\left(\epsilon + \frac{13.67}{Rem_t}\right)}$$

$$= \frac{\log\left(0.000125 + \frac{13.67}{6.10 \times 10^5}\right)}{\log\left(0.00012 + \frac{13.67}{6.10 \times 10^5}\right)} = 0.9961$$

Copyright ASME International
Provided by IHS under license with ASME
No reproduction or networking permitted without license from IHS
Not for Resale

Then,

$$1 - (\eta_p)_{sp} = (1 - 0.828)\left(\frac{1.0354}{0.99940}\right)\left(\frac{0.9967}{0.9961}\right) = 0.1785$$

and

$$(\eta_{sp})_{sp} = 0.822$$

The polytropic exponent is found from

$$\left(\frac{n}{n-1}\right)_{sp} = (\eta_p)_{sp}\left(\frac{k}{k-1}\right)_{sp} = 0.822\left(\frac{1.37}{0.37}\right) = 3.042$$

or

$$n_{sp} = \frac{3.054}{2.054} = 1.49$$

The polytropic work coefficient ratio for the specified operating condition is

$$(\mu_p)_{sp} = (\mu_p)_t \frac{(\eta_p)_{sp}}{(\eta_p)_t} = 0.4075\,\frac{0.822}{0.828} = 0.4044$$

Discharge pressure ratio is found using the definition of the polytropic work coefficient to give

$$\left(\frac{p_d}{p_i}\right)_{sp} = \left[(\mu_p)_{sp}\left(\frac{\frac{\sum U^2}{g_c}}{\left(\frac{n}{n-1}\right)RT_i}\right)_{sp} + 1\right]^{\left(\frac{n}{n-1}\right)_{sp}}$$

$$= \left[0.4044\left(\frac{\left(7.037 \times 10^6\ \frac{\text{ft}^2}{\text{sec}^2}\right)\left(\frac{1}{32.174}\ \frac{\text{lbf sec}^2}{\text{ft lbm}}\right)}{\left(\frac{1.37}{0.37}\right)\left(1545\ \frac{\text{ft lb}}{\text{lbmole °R}}\right)\left(\frac{1}{28.36}\ \frac{\text{lbmole}}{\text{lbm}}\right)(600.7°\text{ R})}\right) + 1\right]^{3.042} = 6.400$$

Discharge pressure is found using Eq. [5.4T-15]

$$p_d = 6.400\ (p_i)_{sp} = 6.400\ (7.53\ \text{psia}) = 48.2\ \text{psia}$$

(b) Capacity at specified conditions is found using the definition of the flow coefficient and equating the flow coefficients at test and specified conditions (see Eq. [5.4T-1])

$$q = \left(\frac{w}{\rho_i}\right)_{sp} = \phi_{sp}(ND^3)_{sp} = \phi_t(ND^3)_{sp}$$

$$= 0.03148\left(10{,}000\ \frac{\text{rev}}{\text{min}}\right)\left(2\pi\ \frac{\text{rad}}{\text{rev}}\right)\left(\frac{20}{12}\ \text{ft}\right)^2 = 9157\ \frac{\text{ft}^3}{\text{min}}$$

Copyright ASME International
Provided by IHS under license with ASME
No reproduction or networking permitted without license from IHS
Not for Resale

(c) The inlet mass flow rate is

$$w_{sp} = \left(\frac{w}{\rho_i}\right)_{sp} (\rho_i)_{sp}$$

$$= \left(9157 \frac{\text{ft}^3}{\text{min}}\right)\left(0.03136 \frac{\text{lbm}}{\text{ft}^3}\right)\left(60 \frac{\text{min}}{\text{hr}}\right) = 17{,}230 \frac{\text{lbm}}{\text{hr}}$$

(d) The specific volume ratio based on total conditions is

$$\left(\frac{v_i}{v_d}\right)_{sp} = \left[\left(\frac{p_d}{p_i}\right)^{\frac{1}{n}}\right]_{sp} = 6.400^{\frac{1}{1.49}} = 3.48$$

(e) Discharge total temperature is found using Eq. [5.4T-18]

$$(T_d)_{sp} = \left[T_i \left(\frac{p_d}{p_i}\right)^{\frac{n-1}{n}}\right]_{sp} = 600.7\ ^\circ\text{R}\ (6.400)^{\frac{0.49}{1.49}} = 11.06\ ^\circ\text{R}$$

Since this temperature is nearly equal to the design value of 1103.5°R, the average specific heat chosen for the calculations is assumed appropriate.

(f) Gas power is found using the equality of the total work input coefficient between the test and the specified operating condition. Using the shaft power method, Eq. [5.4T-20], and Table 5.3 gives

$$(P_{g_{sh}})_{sp} = \frac{w_{sp}\,(\Omega_{hb})_{sp}\left(\frac{\Sigma U^2}{g_c}\right)_{sp}}{33{,}000}\,(P_{g_{sh}})_{sp} = \frac{w_{sp}(\Omega_{hb})_t\left(\frac{\Sigma U^2}{g_c}\right)_{sp}}{33{,}000}$$

$$= \frac{17{,}230 \frac{\text{lbm}}{\text{min}}\,(0.4901)\left(7.037 \times 10^6 \frac{\text{ft}^2}{\text{sec}^2}\right)\left(\frac{1}{32.174} \frac{\text{lbf sec}^2}{\text{ft lbm}}\right)}{\left(33{,}000 \frac{\text{ft lbf}}{\text{min hp}}\right)\left(60 \frac{\text{min}}{\text{hr}}\right)}$$

$$= 932.8 \text{ hp (shaft power method)}$$

Using the heat balance method, Eq. [5.4T-20], and Table 5.3 gives

$$(P_{g_{hb}})_{sp} = \frac{w_{sp}\,(\Omega_{hb})_{sp}\left(\frac{\Sigma U^2}{g_c}\right)_{sp}}{33{,}000} = \frac{w_{sp}(\Omega_{hb})_t\left(\frac{\Sigma U^2}{g_c}\right)_{sp}}{33{,}000}$$

$$= \frac{\left(17{,}230 \frac{\text{lbm}}{\text{min}}\right)(0.4935)\left(7.037 \times 10^6 \frac{\text{ft}^2}{\text{sec}^2}\right)\left(\frac{1}{32.174} \frac{\text{lbf sec}^2}{\text{ft lbm}}\right)}{\left(33{,}000 \frac{\text{ft lbf}}{\text{min hp}}\right)\left(60 \frac{\text{min}}{\text{hr}}\right)}$$

$$= 939.3 \text{ hp (heat balance method)}$$

Copyright ASME International
Provided by IHS under license with ASME
No reproduction or networking permitted without license from IHS
Not for Resale

(g) The shaft power is found by assuming the mechanical losses are proportional to a power of the rotational speed (see Eq. [5.6.8])

$$(Q_m)_{sp} = (Q_m)_t \left(\frac{N_{sp}}{N_t}\right)^{2.5} = 67.8 \text{ hp} \left(\frac{10{,}000 \frac{\text{rev}}{\text{min}}}{9{,}500 \frac{\text{rev}}{\text{min}}}\right)^{2.5} = 77.1 \text{ hp}$$

The shaft power is found using Eqs. [5.4.14], [5.4.17], and [5.4.18]

$$(P_{sh})_{sp} = (P_{g_{sh}} + Q_m)_{sp}$$

$$= (932.8 \text{ hp} + 77.1 \text{ hp})$$

$$= 1010 \text{ hp (shaft power method)}$$

or

$$(P_{sh})_{sp} = (P_{g_{sh}} + Q_m)_{sp}$$

$$= (939.3 \text{ hp} + 77.1 \text{ hp})$$

$$= 1016 \text{ hp (shaft power method)}$$

(h) Static discharge temperature and pressure may be calculated from the mass flow rate, flow area, and total temperature and pressure. Since the flow Mach number is below 0.2, Eqs. [5.4.2], [5.4.3], [5.4.4], and [5.4.6] may be used.

With a guessed velocity of 80.2 ft/sec, obtained by trial and error,

$$(T_{\text{static } d})_{sp} = (T_d)_{sp} - \frac{V_d^2}{2Jg_c c_p}$$

$$= 1106. - \frac{(802)^2 \frac{\text{ft}^2}{\text{sec}^2}}{2\left(778.17 \frac{\text{ft lbf}}{\text{Btu}}\right)\left(32.174 \frac{\text{ft lbm}}{\text{lbf sec}^2}\right)\left(0.281 \frac{\text{Btu}}{\text{lbm °R}}\right)} = 1105.5 \text{ °R}$$

$$(p_{\text{static } d})_{sp} = (p_d)_{sp} - \frac{(\rho_{\text{static } d})_{sp} V_d^2}{2g_c (144)}$$

$$= 48.2 \frac{\text{lbf}}{\text{in}^2} - \frac{\left(0.109 \frac{\text{lbm}}{\text{ft}^3}\right)(80.2)^2 \frac{\text{ft}^2}{\text{sec}^2}}{2\left(32{,}174 \frac{\text{ft lbm}}{\text{lbf sec}^2}\right)\left(144 \frac{\text{in}^2}{\text{ft}^2}\right)} = 48.12 \frac{\text{lbf}}{\text{in}^2}$$

Copyright ASME International
Provided by IHS under license with ASME
No reproduction or networking permitted without license from IHS
Not for Resale

Checking

$$V = \left(\frac{w}{60}\right)\left(\frac{\left(287.17\ \frac{\text{lbm}}{\text{min}}\right)\left(\frac{1}{60}\ \frac{\text{min}}{\text{sec}}\right)}{\left(0.109\ \frac{\text{lbm}}{\text{ft}^3}\right)\frac{\pi}{4}\left(\frac{10.02}{12}\right)^2\ \text{ft}^2}\right) = 80.2\ \frac{\text{ft}}{\text{sec}}$$

$$(\rho_{\text{static } d})_{sp} = \frac{144\ (p_{\text{static } d})_{sp}}{R\ (T_{\text{static } d})_{sp}}$$

$$= \frac{\left(144\ \frac{\text{in}^2}{\text{ft}^2}\right)\left(48.2\ \frac{\text{lbf}}{\text{in}^2}\right)}{\left(1545\ \frac{\text{ft lbf}}{\text{lbm °R}}\right)\left(\frac{1}{28.36}\ \frac{\text{lbmole}}{\text{lbm}}\right)(1105.5\ \text{°R})} = 0.109\ \frac{\text{lbm}}{\text{ft}^3}$$

Check for a Type 2 Test

(a) Specific volume ratio (see Eq. [5.5.5])

$$\frac{\left(\frac{v_i}{v_d}\right)_t}{\left(\frac{v_i}{v_d}\right)_{sp}} \times 100 = \frac{3.65}{3.48} \times 100 = 1.049\%$$

The test specific volume flow ratio is just within the Table 3.2 range of 95% to 105%.

The difference is due largely to the assumption of equal gas properties between test and specified conditions made when determining the test speed. A retest at an adjusted speed would reduce this deviation.

(b) Capacity — speed (flow coefficient) ratio (see Eqs. [5.2T-1] and [5.4T-4]

$$\frac{\left(\frac{w_i}{\rho_i}\right)_t}{\left(\frac{w_i}{\rho_i}\right)_{sp}} \times 100 = \frac{\frac{\left(36{,}500\ \frac{\text{lbm}}{\text{hr}}\right)}{\left(0.06993\ \frac{\text{lbm}}{\text{ft}^3}\right)\left(9{,}500\ \frac{\text{rev}}{\text{min}}\right)}}{\frac{\left(17{,}300\ \frac{\text{lbm}}{\text{hr}}\right)}{\left(0.03136\ \frac{\text{lbm}}{\text{ft}^3}\right)\left(10{,}000\ \frac{\text{rev}}{\text{min}}\right)}} \times 100 = 99.6\%$$

Copyright ASME International
Provided by IHS under license with ASME
No reproduction or networking permitted without license from IHS
Not for Resale

The test capacity — speed ratio is within the Table 3.2 range of 96% to 104%.

(c) Test Machine Mach number (see para. 5.5.1)

$$Mm = \frac{U_1}{\sqrt{k_i R T_{dbi}}} = \frac{DN_i}{2\sqrt{k_i R T_{dbi}}}$$

$$Mm_{sp} = \frac{\left(10{,}000\ \frac{\text{rev}}{\text{min}}\right)\left(\frac{20.2}{12}\ \text{ft}\right)\left(2\pi\ \frac{\text{rad}}{\text{rev}}\right)\left(\frac{1}{60}\ \frac{\text{min}}{\text{sec}}\right)}{2 \times \sqrt{1.384\left(1545\ \frac{\text{ft lbf}}{\text{lbmol °R}}\right)\left(\frac{1}{26.84}\ \frac{\text{lbmole}}{\text{lbm}}\right)(600.7\ °\text{R})\left(32.174\ \frac{\text{ft lbm}}{\text{lbf sec}^2}\right)}} = 0.710$$

$$Mm_t = \frac{\left(9{,}500\ \frac{\text{rev}}{\text{min}}\right)\left(\frac{20.2}{12}\ \text{ft}\right)\left(2\ \pi\ \frac{\text{rad}}{\text{rev}}\right)\left(\frac{1}{60}\ \frac{\text{min}}{\text{sec}}\right)}{2 \times \sqrt{1.397\left(1545\ \frac{\text{ft lbf}}{\text{lbmol °R}}\right)\left(\frac{1}{26.84}\ \frac{\text{lbmole}}{\text{lbm}}\right)(540.7\ °\text{R})\left(32.174\ \frac{\text{ft lbm}}{\text{lbf sec}^2}\right)}} = 0.708$$

The test Machine Mach number is within the Fig. 3.4 range of 0.625(0.710 – 0.085) to 0.815 (0.710 + 0.105).

(d) Machine Reynolds number ratio (see Eq. [5.5.5])

$$\text{Rem} = \frac{Ub}{\nu_i} = \frac{ND_i b}{2N_i}$$

$$\text{Rem}_{sp} = \frac{\left(10{,}000\ \frac{\text{rev}}{\text{min}}\right)\left(2\pi\ \frac{\text{rad}}{\text{rev}}\right)\left(\frac{20}{12}\ \text{ft}\right)\left(\frac{1.5}{12}\ \text{ft}\right)}{2\left(4.00 \times 10^{-4}\ \frac{\text{ft}^2}{\text{sec}}\right)\left(60\ \frac{\text{sec}}{\text{min}}\right)} = 2.73 \times 10^5$$

$$\text{Rem}_t = \frac{\left(9{,}500\ \frac{\text{rev}}{\text{min}}\right)\left(2\pi\ \frac{\text{rad}}{\text{rev}}\right)\left(\frac{20}{12}\ \text{ft}\right)\left(\frac{1.5}{12}\ \text{ft}\right)}{2\left(1.70 \times 10^{-4}\frac{\text{ft}^2}{\text{sec}}\right)\left(60\ \frac{\text{sec}}{\text{min}}\right)} = 6.10 \times 10^5$$

$$\frac{\text{Rem}_t}{\text{Rem}_{sp}} \times 100 = \frac{6.10 \times 10^5}{2.73 \times 10^5} \times 100 = 223.4\%$$

The test Machine Reynolds number is above the Table 3.2 lower limit of 90,000 and the Machine Reynolds number is between the Fig. 3.6 limits of 0.17 and 6.5.

Since all the Table 3.2 requirements are satisfied, the test is a Type 2 test.

Copyright ASME International
Provided by IHS under license with ASME
No reproduction or networking permitted without license from IHS
Not for Resale

TABLE C.2.1
CALCULATION SUMMARY

Quantity	Symbol	Units	Test Value	Test Corrected to Specified Operating Condition	Expected at Specified Operating Condition
1. Quantity of gas delivered	w	lbm/hr	36,500	17,230	17,300
2. Pressure rise	Δp	psi	85.6	40.7	40.6
3. Head (total)	W_p	ft · lbf/lbm	80,400	88,450	88,200
4. Shaft power					
(a) Shaft method	$(P_{sh})_{sh}$	hp	1851	1010	1025
(b) Heat method	$(P_{sh})_{hb}$	hp	1862	1016	1025
5. Polytropic efficiency	η_p		0.828	0.822	0.82
6. Flow coefficient	ϕ		0.0315	0.0315	0.0316
7. Machine Mach no.	Mm		0.724	0.703	0.703
8. Machine Reynolds no.	Rem		610,000	273,000	273,000
9. Specific volume ratio (total)	(v_i/v_d)		3.48	3.48	3.48
10. Specific heat ratio	k		1.39	1.37	1.37
11. Polytropic work coefficient	μ_p		0.408	0.44	—
12. Work input coefficient	μ_{min}		0.493	0.493	—
13. Total work input coefficient					
(a) Shaft method	Ω_{sh}		0.490	0.490	—
(b) Heat method	Ω_{hp}		0.494	0.494	—
14. Capacity	$q = (w/o_i)$	ft^3/min	8700	9160	9190
15. Inlet gas state					
(a) Static temperature	T	°R	540	660	600
(b) Static pressure	p	psia	14.1	7.50	7.50
(c) Total temperature	T	°R	541	601	601
(d) Total pressure	p	psia	14.2	7.53	7.53
16. Discharge gas state					
(a) Static temperature	T	°R	1042	1106	1103
(b) Static pressure	p	psia	99.6	48.1	48.0
(c) Total temperature	T	°R	1043	1106	1103
(d) Total pressure	p	psia	99.7	48.2	48.1
17. Gas power					
(a) Shaft method	$(P_g)_{sh}$	hp	1794	933	—
(b) Heat method	$(P_g)_{hb}$	hp	1794	939	—
18. Casing heat loss	Q_r	hp	2.65	—	—
19. Speed	N	rpm	9,500	10,000	10,000
20. Mechanical losses	Q_m	hp	67.8	77.1	—

Copyright ASME International
Provided by IHS under license with ASME
No reproduction or networking permitted without license from IHS
Not for Resale

SAMPLE CALCULATION C.3
IDEAL GAS APPLICATION TO SELECTION OF TEST SPEED AND TEST GAS AND METHODS OF POWER EVALUATION

This sample calculation is intended to demonstrate:

(a) Test speed selection

(b) The effect of substitute gas use on achievement of flow similarity

(c) Methods of power evaluation

The following information is given about the design:

Number of stages = 6
1st stage diameter = 11.459 in.
Impeller exit tip width = 0.5 in.
Shaft rotational speed = 16000 rpm
Gas — Methane
Inlet pressure = 30 psia
Inlet temperature = 570°R
$\Sigma U^2/g_c$ = 1.11006 × 10^5 ft-lbf/lbm

At an inlet flow of 3000 ft^3/min
Discharge pressure = 90 psia
Polytropic efficiency = 0.76
Shaft power = 690 hp

The data in the left hand column above indicate the specified operating conditions. This data describes the compressor geometry, the operational speed, and inlet gas conditions. The data in the above right hand column describes the intended performance of the compressor at the specified operating conditions. It is the purpose of the test to verify these intended values or establish the actual values.

It is assumed that circumstances prohibit testing with methane. Air is available at 14.7 psia, 520°R, and 50 percent relative humidity. The driver has variable speed capability.

The following assumptions are made to simplify the calculation process so that focus may be made on demonstration points.

(a) Both the test gas, air, and the specified gas, methane, will be treated as ideal gases with constant specific heats. Average values will be used. (The alternative is to use actual gas thermodynamic data and the Type 2 calculation procedure. This would lead to slightly more accurate results.)

(b) Leakages will be assumed negligible at both test and specifed conditions. The rotor mass flow rate is then the inlet mass flow rate.

The test speed required to provide equivalence between test and specified conditions is obtained from the speed selection rule. For ideal gases,

$$N_t = N_{sp} \sqrt{\frac{\left[\left(\frac{k}{k-1}\right) RT_i \left(\frac{p_d}{p_i}\right)^{\frac{1}{\eta_p}\left(\frac{k-1}{k}\right)} - 1\right]_t}{\left[\left(\frac{k}{k-1}\right) RT_i \left(\frac{p_d}{p_i}\right)^{\frac{1}{\eta_p}\left(\frac{k-1}{k}\right)} - 1\right]_{sp}}}$$

Copyright ASME International
Provided by IHS under license with ASME
No reproduction or networking permitted without license from IHS
Not for Resale

TABLE C.3.1
PRETEST CALCULATION SUMMARY

	Gas	Methane	Air
p_d	psia	90.	51.597
p_i	psia	30.	14.7
Ti	°R	570.	520.
R	ft-lbf/lbm°R	96.31	53.53
k		1.28	1.396
ρ	lbm/ft^3	0.078693	0.0761
μ	lbm/ft · sec	0.769×10^{-5}	1.27×10^{-5}
N	rpm	16000.	12704.
U	ft/sec	800.	635
Mm		0.532	0.5675
Rem		3.411×10^5	1.583×10^5
η_p		0.76	0.76 (excludes Reynolds Number correction)
p_d/p_i		3.0	3.51
n		1.4	1.6
q_i/q_d		2.19	2.19
ϕ		0.00343	

with

$$\left(\frac{p_d}{p_i}\right)^{\frac{1}{n_t}} = \left(\frac{p_d}{p_i}\right)_{sp}^{\frac{1}{n_{sp}}} = \frac{q_i}{q_d}$$

and

$$\frac{n}{n-1} = \eta_p \frac{k}{k-1}, \text{ and } \text{Rem}_{corr} = 1$$

Precise values of pressure ratio, efficiency, and polytropic exponent for both specified and test conditions are of course unknown before test. However, the appropriate test speed may be estimated by making the following assumptions:

(a) The pressure ratio and efficiency at specified operating conditions are equal to the design values.

(b) The efficiency at test conditions is also equal to the design value. While the Reynolds number effect might be taken into account here, it is small and the current calculation is only an estimate. It is ignored simply for computational ease.

The first assumption allows calculation of the specified condition polytropic exponent. The second allows calculation of the test polytropic exponent. With these a test pressure ratio estimate and a required test speed estimate may be calculated. This speed may be used to calculate Machine Mach and Reynolds numbers.

The gas data used and results of the computations indicated above are summarized in Table C.3.1. The values in this table may be used to determine if it is possible to accomplish the proposed test within the allowable deviations in similarity parameters.

Mach Number Check: The test Mach number is ≃ 6.6 percent greater than the design Mach number. This is an unavoidable consequence of gas selection with

Copyright ASME International
Provided by IHS under license with ASME
No reproduction or networking permitted without license from IHS
Not for Resale

different k values when specific volume ratio equality is maintained. The deviation is, however, within the limits of Fig. 3.2.

Reynolds Number Check: The test Reynolds number is ≃46 percent of the design Reynolds number. This is within the deviation limits of Fig. 3.4, and the correction relationship applies. The correction has not been applied to the tabulated values, since the computations are preliminary.

The compressor is run to obtain a bracketing point. A bracketing point lies within ±4 percent of the specified operating condition flow coefficient of interest, which is

$$\phi_{sp} = \left[\frac{q_i}{2\pi N D^3}\right]_{sp} = \frac{3000}{2\pi (16000)\left(\frac{11.459}{12}\right)^3} = 0.03427$$

The desired test inlet flow may be calculated from test and specified operating condition flow coefficient equality, which yields

$$q_{i_t} = q_{i_{sp}}\left(\frac{N_t}{N_{sp}}\right) = 3000\left(\frac{12704}{16000}\right) = 2383\ \frac{\text{ft}^3}{\text{min}}$$

The test yields the following data:

w= 2.9595 lbm/sec
p_i= 14.7 lbf/in^3
T_i= 520 °R
RH_i= 50%
p_d= 50.4 lbf/in^2
T_d= 832 °R
Q_m= 20 hp (from lubricating oil temperature rise and flow rate)
Q_r= 5574.5 Btu/hr (calculated casing heat loss)
P_{sh}= 339. hp (shaft power, perhaps from a torquemeter)
N= 12690 rpm
R= 53.53 ft-lbf/lbm•°R

The next step is to compute the following dimensionless parameters from the test data.

Specific Volume Ratio:

$$r_{v_t} = \left(\frac{p_d}{p_i}\right)^{\frac{1}{n}} = 2.14286$$

Flow Coefficient:

$$\phi_t = \frac{w_i}{\rho_i 2\pi N\left(\frac{D}{12}\right)^3} = 0.03363$$

Copyright ASME International
Provided by IHS under license with ASME
No reproduction or networking permitted without license from IHS
Not for Resale

Polytropic Work Coefficient:

$$\mu_{p_t} = \frac{\left(\frac{n}{n-1}\right) RT_i}{\frac{\Sigma U^2}{g_c}} \left[\left(\frac{p_d}{p_i}\right)^{\frac{n-1}{n}} - 1\right] = 0.62702$$

Work Input Coefficient:

$$\mu_{\text{in}_t} = \frac{Jc_p(T_d - T_i)}{\frac{\Sigma U^2}{g_c}} = 0.84317$$

Polytropic Efficiency:

$$\eta_{p_t} = \frac{\mu_{p_t}}{\mu_{\text{in}_t}} = 0.744$$

Total Work Input Coefficient: (Heat balance method)

$$\Omega_{hb_t} = \frac{J\left[c_p(T_d - T_i) + \frac{Q_r}{w_i}\right]}{\frac{\Sigma U^2}{g_c}} = 0.849$$

Total Work Input Coefficient: (Shaft power method)

$$\Omega_{sh_t} = \frac{\left(P_{sh} - \frac{Q_m J}{33000}\right)\left(\frac{33000}{w_i}\right)}{\frac{\Sigma U^2}{g_c}} = 0.849$$

Machine Mach Number:

$$Mm_t = \frac{U}{\sqrt{g_c k R T_i}} = 0.5675$$

Machine Reynolds Number:

$$\text{Rem}_t = \frac{Ub}{\nu} = 1.583 \times 10^5$$

which have been evaluated using

$$p_d/p_i = 50.4/14.7 = 3.4286$$

Copyright ASME International
Provided by IHS under license with ASME
No reproduction or networking permitted without license from IHS
Not for Resale

$$v_i/v_d = (p_d/p_i)/(T_d/T_i) = 3.4286/(832/520) = 2.1429$$

$$n = \ln (p_d/p_i)/\ln(v_i/v_d) = \ln (3.4286)/\ln (3.1429) = 1.6167$$

$$w_i = (2.9595 \text{ lbm/sec}) (60 \text{ sec/min}) = 177.57 \text{ lbm/min}$$

$$N = 12690 \text{ rev/min}$$

$$D = 11.459 \text{ in.}$$

$$R = 53.53 \text{ ft-lbf/lbm}\cdot^\circ\text{R}$$

$$T_i = 520 \ ^\circ\text{R}$$

$$\left(\frac{\Sigma U^2}{g_c}\right)_t = \left(\frac{N_t}{N_{sp}}\right)^2 \left(\frac{\Sigma U^2}{g_c}\right)_{sp} = \left(\frac{12690}{16000}\right)^2 1.11006 \times 10^5 = 6.9828 \times 10^4 \frac{\text{ft} \cdot \text{lbf}}{\text{lbm}}$$

$$k = 1.396$$

$$Q_r = \left(\frac{k}{k-1}\right)\frac{R}{J} = \left(\frac{1.396}{0.396}\right)\left(\frac{53.53}{778.16}\right) = 0.2425 \frac{\text{Btu}}{\text{lbm} \ ^\circ\text{R}}$$

$$T_d = 832 \ ^\circ\text{R}$$

$$c_p = (5574.5 \text{ Btu/hr}) (1/60 \text{ hr/min}) = 92.91 \text{ Btu/min}$$

Copyright ASME International
Provided by IHS under license with ASME
No reproduction or networking permitted without license from IHS
Not for Resale

$$\rho_i = \frac{p_i}{RT_i} = \frac{14.7\left(\frac{\text{lbf}}{\text{in}^2}\right) 144\left(\frac{\text{in}^2}{\text{ft}^2}\right)}{53.53\left(\frac{\text{ft} \cdot \text{lbf}}{\text{lbm °R}}\right) 520\ °\text{R}} = 0.076047\ \frac{\text{lbm}}{\text{ft}^3}$$

$$q_i = \frac{w_i}{\rho_i} = \frac{2.9595\left(\frac{\text{lbm}}{\text{sec}}\right) 60\left(\frac{\text{sec}}{\text{min}}\right)}{0.076047\left(\frac{\text{lbm}}{\text{ft}^3}\right)} = 2335\ \frac{\text{ft}^3}{\text{min}}$$

$$P_{sh} = 339\ \text{hp}$$

$$Q_m = \frac{(20\ \text{hp})\ 33000\left(\frac{\text{ft} \cdot \text{lbf}}{\text{min} \cdot \text{hp}}\right)}{778.16\left(\frac{\text{ft} \cdot \text{lbf}}{\text{Btu}}\right)} = 848.2\ \frac{\text{Btu}}{\text{min}}$$

$$U = \frac{2\pi N}{60}\frac{D}{24} = \left(2\pi\ \frac{\text{Rad}}{\text{rev}}\right)\left(12690\ \frac{\text{rev}}{\text{min}}\right)\left(\frac{1}{60}\ \frac{\text{min}}{\text{sec}}\right)\left(\frac{11.459}{2}\ \text{in.}\right)\left(\frac{1}{12}\ \frac{\text{ft}}{\text{in.}}\right) = 634.5\ \frac{\text{ft}}{\text{sec}}$$

$$\nu = \frac{\mu}{\rho} = \frac{1.27 \times 10^{-5}\left(\frac{\text{lbm}}{\text{ft} \cdot \text{sec}}\right)}{0.076047\left(\frac{\text{lbm}}{\text{ft}^3}\right)} = 1.67 \times 10^{-4}\ \frac{\text{ft}^2}{\text{sec}}$$

$$b = 0.5\ \text{in.}\left(\frac{1}{12}\ \frac{\text{ft}}{\text{in.}}\right) = 0.0417\ \text{ft}$$

The preliminary assumption is made that these coefficients with appropriate Reynolds number correction, also apply at specified conditions. The limits for allowable test Machine Reynolds number are given by

$$\frac{\text{Rem}_t}{\text{Rem}_{sp}} = 100^{\left(\frac{\text{Rem}_{sp}}{10^7}\right)^{0.3 \pm 1}} = 100^{\left(\frac{3.411 \times 10^5}{10^7}\right)^{0.3 \pm 1}} = 5.32^{\pm 1}$$

Copyright ASME International
Provided by IHS under license with ASME
No reproduction or networking permitted without license from IHS
Not for Resale

or

$$6.41 \times 10^4 \leq \text{Rem}_t \leq 1.81 \times 10^6$$

The test Machine Reynolds number does fall within these limits and the efficiency correction may be used. Thus

$$1 - \eta_{p_{sp}} = (1 - \eta_{p_t}) \frac{\text{RA}_{sp}}{\text{RA}_t} \frac{\text{RB}_{sp}}{\text{RB}_t} = (1 - 0.744) \frac{0.97798\ (0.99648)}{1.01184\ (0.99718)} = 0.2476$$

where

$$\text{RA}_{sp} = 0.066 + 0.934 \left(\frac{4.8 \times 10^6\ b}{\text{Rem}_{sp}}\right)^{\text{RC}_{sp}} = 0.97798$$

$$\text{RA}_t = 0.066 + 0.934 \left(\frac{4.8 \times 10^6\ b}{\text{Rem}_t}\right)^{\text{RC}_t} = 1.01184$$

$$\text{RB}_{sp} = \frac{\log\left[0.000125 + \left(\frac{13.67}{\text{Rem}_{sp}}\right)\right]}{\log\left[\epsilon + \left(\frac{13.67}{\text{Rem}_{sp}}\right)\right]} = 0.99648$$

$$\text{RB}_t = \frac{\log\left[0.000125 + \left(\frac{13.67}{\text{Rem}_t}\right)\right]}{\log\left[\epsilon + \left(\frac{13.67}{\text{Rem}_t}\right)\right]} = 0.99718$$

with

$\text{RC}_{sp} = 0.988\ \text{Rem}_{sp}^{-0.243} = 0.044696$

$\text{RC}_t = 0.988\ \text{Rem}_{sp}^{-0.243} = 0.053862$

$b = 0.5$ in.

$\text{Rem}_{sp} = 3.411 \times 10^5$

$\text{Rem}_t = 1.593 \times 10^5$

$\epsilon = 0.000120$ in.

So,

$$\eta_{p_{sp}} = 0.7524, \text{ and } \text{Rem}_{\text{corr}} = \frac{\eta_{p_{sp}}}{\eta_{p_t}} = \frac{0.752}{0.744} = 1.0118$$

The Reynolds number correction is applied to both the polytropic efficiency and the polytropic work coefficient.

Copyright ASME International
Provided by IHS under license with ASME
No reproduction or networking permitted without license from IHS
Not for Resale

In summary, the preliminary assumption is that the following dimensionless coefficient set applies at specified operating conditions.

$$\phi_{sp} = \phi_t = 0.3363$$

$$\mu_{in_{sp}} = \mu_{in_t} = 0.84317$$

$$\Omega_{hb_{sp}} = \Omega_{hb_t} = 0.84900$$

$$\Omega_{sh_{sp}} = \Omega_{sh_t} = 0.84900$$

$$\eta_{p_{sp}} = \eta_{p_t}\,\mathrm{Rem_{corr}} = 0.744\ (1.0118) = 0.752$$

$$\mu_{p_{sp}} = \mu_{p_t}\,\mathrm{Rem_{corr}} = 0.627\ (1.0118) = 0.634$$

This assumption is taken to be valid to the approximation involved if:

(a) the test specific volume ratio is within ±5 percent of the specified condition volume ratio (Table 3.2). The specified operating condition volume ratio is calculated to determine if this requirement is met. This is done by using the polytropic work coefficient and polytropic efficiency to calculate the specified condition discharge gas state, i.e.,

$$\left(\frac{p_d}{p_i}\right)_{sp} = \left[\mu_{p_{sp}}\left\{\frac{\Sigma U^2}{\left(\frac{n}{n-1}\right)RT_i}\right\}_{sp} + 1\right]^{\left(\frac{n}{n-1}\right)_{sp}}$$

$$= \left[0.6344\left(\frac{1.11006 \times 10^5}{(3.4395)\ 96.31\ (570)}\right) + 1\right]^{3.4395} = 2.9750$$

where

$$\left(\frac{n}{n-1}\right)_{sp} = \left(\frac{k}{k-1}\right)_{sp}\eta_{p_{sp}} = \frac{1.28}{0.28}\,0.7524 = 3.4395$$

Copyright ASME International
Provided by IHS under license with ASME
No reproduction or networking permitted without license from IHS
Not for Resale

which yields $n_{sp} = 1.4099$.

The specific volume ratio is then

$$r_{v_{sp}} = \left(\frac{p_d}{p_i}\right)_{sp}^{\frac{1}{n_{sp}}} = 2.975^{\frac{1}{1.4099}} = 2.167$$

(which is within the ±5 percent limit).

(b) the test Machine Mach number is within the limits of Fig. 3.4, which is seen to be satisfied;

(c) the test Machine Reynolds number is within the limits as already described;

(d) the test flow coefficient is within ±4 percent of the specified operating condition flow coefficient of interest.

It is concluded that the dimensionless coefficient set developed is valid for the specified operating conditions. The following quantities of interest at the specified operating conditions are established from this set as follows.

The section pressure ratio has already been established in the volume ratio calculation using the polytropic efficiency and polytropic work coefficient. The discharge gas state is then

$$p_{d_{sp}} = \left(\frac{p_d}{p_i}\right)_{sp} p_{i_{sp}} = 2.975\ (30.) = 89.25\ \frac{\text{lbf}}{\text{in}^2}$$

$$\left(\frac{T_d}{T_i}\right)_{sp} = \left(\frac{p_d}{p_i}\right)^{\frac{n-1}{n}} = 2.975^{\frac{0.4099}{1.4099}} = 1.373$$

$$T_{d_{sp}} = \left(\frac{T_d}{T_i}\right)_{sp} T_{i_{sp}} = 1.373\ (570) = 782.6\ °\text{R}$$

The flow is determined from the flow coefficient

$$q_i = \left[\phi_{sp} 2\pi N \left(\frac{D}{12}\right)^3\right]_{sp} = 0.03363\ 2\ \pi \frac{\text{rad}}{\text{rev}}\ 16000\ \frac{\text{rev}}{\text{min}} \left(\frac{11.459}{12}\ \text{ft}\right)^3 = 2944\ \frac{\text{ft}^3}{\text{min}}$$

$$w_i = \rho_i q_i = \left[\frac{144\ (30)}{96.31\ (570)}\ \frac{\text{lbm}}{\text{ft}^3}\right] 2944\ \frac{\text{ft}^3}{\text{min}} = 231.7\ \frac{\text{lbm}}{\text{min}}$$

Copyright ASME International
Provided by IHS under license with ASME
No reproduction or networking permitted without license from IHS
Not for Resale

The power requirement at the specified operating conditions is determined from the total work input coefficient.

$$P_{sh_{sp}} = \frac{\left[w\,\Omega\,\frac{\Sigma U^2}{g_c}\right]_{sp}}{33000} + \frac{Q_{m_{sp}}\,J}{33000}$$

$$= 3.862\,\frac{\text{lbm}}{\text{sec}}\,60\,\frac{\text{sec}}{\text{min}}\,0.849\left(1.11006 \times 10^5\,\frac{\text{ft} \cdot \text{lbf}}{\text{lbm}}\right)\left(\frac{\text{min}}{33000}\,\frac{\text{hp}}{\text{ft} \cdot \text{lbf}}\right) = 697.3\ \text{hp}$$

where,

$$\frac{Q_{m_{sp}}\,J}{33000} = \frac{Q_{m_t}\,J}{33000}\left(\frac{N_{sp}}{N_t}\right)^{2.5} = 20\ \text{hp}\left(\frac{16000}{12690}\right)^{2.5} = 35.7\ \text{hp}$$

In this example both the shaft method and heat balance method give exactly the same power requirement. This may not always be true because of differences in the independent measurements which are used. This example was specifically constructed using values such that the powers would match.

Copyright ASME International
Provided by IHS under license with ASME
No reproduction or networking permitted without license from IHS
Not for Resale

SAMPLE CALCULATION C.4
TREATMENT OF BRACKETED TEST POINTS

This sample problem is an extension of Sample Calculation C.3. It demonstrates treatment of bracketing points. Suppose that a second data point for the compressor of Sample Calculation C.3 is available. The data is shown in the upper portion of the second column in Table C.4.1. Calculations were done for this data set following the same procedure as in Sample Calculation C.3. The results are summarized in the lower portion of column 2.

The calculated efficiency and work coefficients are plotted as functions of flow coefficient in Fig. C.4.1. The flow coefficient of interest is for 3000 ft^3/min at specified conditions, or

$$\phi = \frac{3000 \dfrac{\text{ft}^3}{\text{min}}}{\left(2\pi \dfrac{\text{rad}}{\text{rev}}\right)\left(16000 \dfrac{\text{rev}}{\text{min}}\right)\left(\dfrac{11.459}{12}\text{ ft}\right)^3} = 0.03427$$

which falls about midway between the data points in Fig. C.4.1. The data points are valid bracketing points in that they are well within 4 percent of the flow coefficient of interest (Table 3.2). In the absence of additional data points, the values of the dimensionless coefficients at the flow coefficient of interest are determined by linear interpolation. Linear interpolation gives

$$\mu_{\text{in}_{sp}} = 0.838,\ \mu_{p_{sp}} = 0.629,\ \eta_{p_{sp}} = 0.750,\ \Omega_{hb_{sp}} = 0.8438,\ \Omega_{sh_{sp}} = 0.8232$$

These values are used to calculate the compressor performance in dimensional terms as follows:
Flow rate: 3000 ft^3/min as above
Discharge pressure:

$$\frac{p_d}{p_i} = \left[\mu_p \frac{\dfrac{\Sigma U^2}{g_c}}{\left(\dfrac{n}{n-1}\right) RT_i} + 1\right]_{sp}^{\frac{n}{n-1}}$$

$$= \left[(0.629)\frac{1.11006 \times 10^5}{(3.430)96.31(570)} + 1\right]_{sp}^{3.4304} = 2.9497$$

Copyright ASME International
Provided by IHS under license with ASME
No reproduction or networking permitted without license from IHS
Not for Resale

TABLE C.4.1

Test Data	Units	1st Data Point	2nd Data Point
N	[rpm]	12690.	12690.
w_i	[lbm/sec]	2.9595	3.0799
p_i	[psia]	14.7	14.7
T_i	[°R]	520.	520.
RH_i	[%]	50.	50.
p_d	[psia]	50.4	49.4
T_d	[°R]	832.	828.
Q_m	[hp]	20.	20.
P_{sh}	[hp]	339.	330.39
Q_r	[Btu/hr]	5574.5	5495.
R	[ft-lbf/lbm°R]	53.53	53.53
k		1.396	1.396

Calculation Summary:

	1st Data Point		2nd Data Point	
	Test Operating Conditions	Specified Operating Conditions	Test Operating Conditions	Specified Operating Conditions
ϕ	0.034	0.034	0.035	0.035
μ_{in}	0.843	0.843	0.832	0.832
μ_p	0.627	0.634	0.615	0.623
η_p	0.744	0.752	0.739	0.748
Ω_{hb}	0.849	0.849	0.838	0.838
Ω_{sh}	0.84900	0.84900	0.794	0.794
Mm	0.5675	0.5320	0.5674	0.5320
Rem	1.583×10^5	3.411×10^5	1.583×10^5	3.411×10^5
q_i/q_d	2.1429	2.1668	2.1105	2.1351

where

$$\frac{n}{n-1} = \eta_{sp}\left(\frac{k}{k-1}\right) = 0.750\left(\frac{1.28}{0.28}\right) = 3.4304$$

$$n = 1.41145$$

and,

$$p_d = (p_d/p_i)\, p_i = (2.9497)\ 30 = 88.49\ \text{lbf/in}^2$$

Copyright ASME International
Provided by IHS under license with ASME
No reproduction or networking permitted without license from IHS Not for Resale

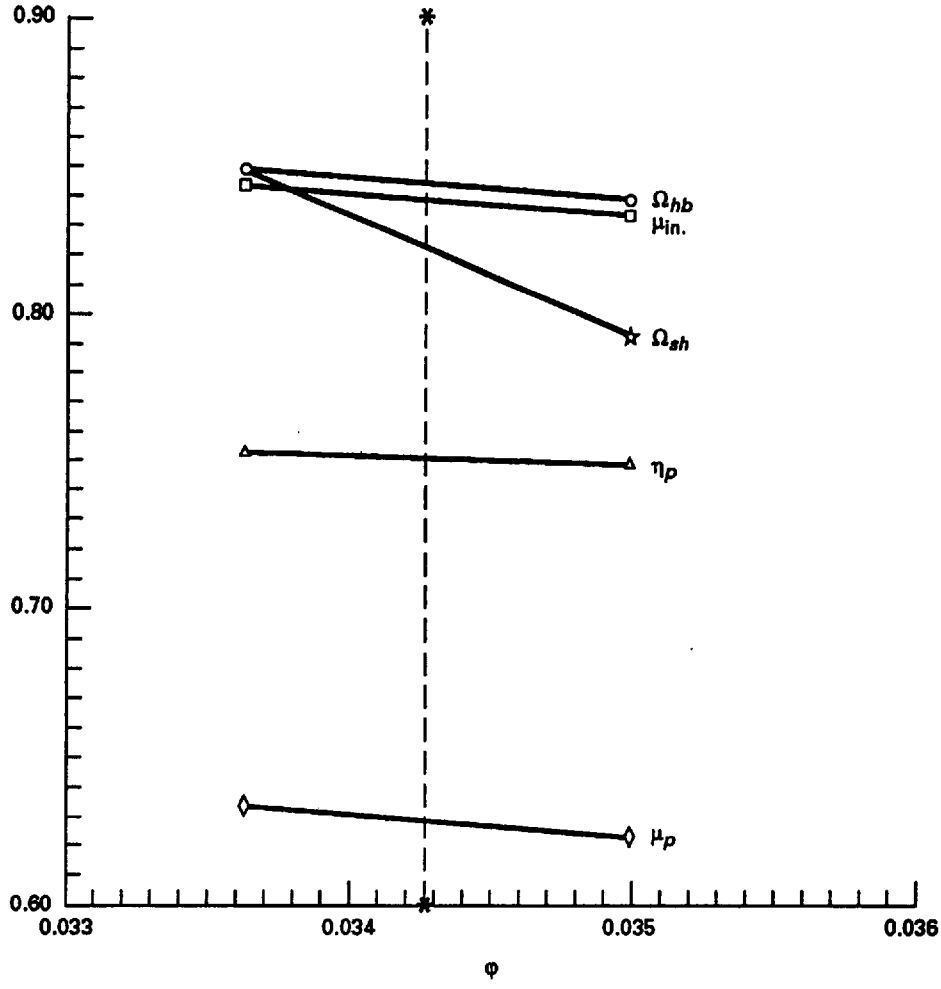

FIG. C.4.1

Power requirement:
Heat balance method:

$$P_{sh_{hb}} = \frac{w_i\,\Omega_{hb}}{33000}\frac{\Sigma U^2}{g_c} + \frac{Q_m J}{33000}$$

$$= \frac{(236.08)0.848(1.11006 \times 10^5)}{33000} + 35.7 \text{ hp} = 705.79 \text{ hp}$$

where

$$w_i = \rho_i\, q_i = [(30)144(3000)]/[(96.31)(570)] = 236.08 \text{ lbm/min}$$

Copyright ASME International
Provided by IHS under license with ASME
No reproduction or networking permitted without license from IHS
Not for Resale

Shaft power method:

$$P_{sh_{hb}} = \frac{w_i\,\Omega_{hb}}{33000}\frac{\Sigma U^2}{g_c} + \frac{Q_m J}{33000}$$

$$= \frac{(236.08)0.823(1.11006 \times 10^5)}{33000} + 35.7 \text{ hp} = 689.43 \text{ hp}$$

Notice that the shaft power and heat balance methods yield two different results in contrast to Sample Calculation C.3. This is due to the contradictory measurements for the second data point, reflected in the two different values for total work input coefficient. One of the values is clearly in error, indicating an error in measurement. With mutual agreement by parties to the test, the options may include:

(a) retest, eliminating the error;

(b) neglecting the error should the difference in results be deemed negligible;

(c) assuming one or the other measurement correct and ignoring the other;

(d) comparison with other data points if available.

In this case the error would appear quite large. Since only two data points are available it might well be prudent to retest for verification. As the methods agree for the first point, the second data point is questionable.

Further, since the test shaft power is smaller for the second data point despite a larger mass flow rate, the shaft power measurement is especially suspect.

Assume that further investigation leads to disqualification of the shaft power measurement for the second data point. The final results from the bracketing data points may be summarized as

	Design	Calculated
Speed (rpm)	16000	16000
Gas	Methane	Methane
T_i (°R)	570.	570.
p_i (psia)	30.	30.
q_i (ft^3/min)	3000.	3000.
p_d	90.	88.49
η_p	0.76	0.750
P_{sh}	690.	705.79
q_i/q_d	2.19	2.152

Comparison of the design and actual results indicates that the compressor falls short of meeting its design pressure goal at design flow. The implication of this fact to the parties involved are beyond the scope of this Code, as they would be also had the compressor exceeded its design goals. However, typical industrial reaction in lieu of mutual acceptance as tested is hardware modification or specified condition speed adjustment. In the event of hardware modification the test must be repeated. For small speed adjustments the test results may remain valid. This is determined by conversion of the test results to the new specified condition speed and verifying that the limits in departure between test and specified conditions are not exceeded.

Copyright ASME International
Provided by IHS under license with ASME
No reproduction or networking permitted without license from IHS Not for Resale

SAMPLE CALCULATION C.5
SELECTION OF A TEST GAS FOR A TYPE 2 TEST USING IDEAL AND REAL GAS EQUATIONS

This sample calculation is intended to demonstrate how to select a test gas and determine the test speed. A compressor designed for use on a hydrocarbon mixture is to be tested in the shop with a closed loop for an ASME test. Table C.5.1 gives the specified operating conditions and predicted performance for the point to be tested. Additionally, it gives mechanical design requirements of the equipment such as the maximum temperature, pressure, rotating speed requirements, the impeller design data needed for the evaluation of test equivalency, and the critical speeds of the compressor rotor system.

The selection of the test gas and computation of the required compressor speed is a multi-step process. Table C.5.2 outlines the basic steps involved in flow chart form. The first step involves computation of the specified conditions; Reynolds number, Mach number, pressure ratios, volume ratios, etc. This data is contained in Table C.5.4. The next step is to select the possible test gases. In this problem nitrogen, carbon dioxide, refrigerant 134a (R134a) and refrigerant 22 (R22) have been selected as possible test gases.[1] Knowing a closed loop is to be used, 20 psia and 100°F were used for a first estimate of inlet conditions. The selection of the 20 psia was to allow a loop with a positive pressure and therefore, no inward leakage of air as a contaminant would occur. Table C.5.3 lists the test gas inlet conditions for each of the gasses. The next step is the determination whether ideal gas or real gas calculation methods should be used.

The X factor and Y factor of Schultz were computed for the specified gas as well as for each of the test gases. It was found that the specified gas required real gas calculations, nitrogen could be assumed to be ideal, and CO_2, R134a, R22 required real gas calculations. From the X and Y factors, an estimate of the c_p and the compressibility Z, the test polytropic exponent was computed. Since the specific volume ratio at test should equal the specific volume ratio at specified operating conditions, the test pressure ratio was computed along with the test discharge pressure and temperature; see Table C.5.4. At this point, a check with mechanical design conditions found that nitrogen and CO_2 test discharge temperatures were in excess of maximum allowed by the mechanical design and a further comparison of speeds also indicated extremely high rotational test speeds in excess of mechanical design. Further computation was not needed for nitrogen and CO_2, as these gases were eliminated. First estimates of temperature and speed for refrigerant 134a and refrigerant 22 (See Table C.5.4) indicated possible test gases since they did not exceed mechanical limitations. However, the rotative speed for the preliminary R22 selection was only 3 percent below the first critical speed and the rotative speed for the R134a selection was approximately 14 percent below the first critical speed. For the first pass, there was no Reynolds numbers correction, verification of specific volume ratio, efficiency, or an estimate of real gas correction factors. The final test speed should be checked so that it is not too close to a critical speed.

The next step is the computation of the test head, discharge enthalpy, isentropic discharge condition, and the real gas correction polytropic work factor. Table C.5.5 has the computed data

[1] It is recognized that there is a potential environmental problem of using refrigerant 22. The use here is only to demonstrate the calculation method.

Copyright ASME International
Provided by IHS under license with ASME
No reproduction or networking permitted without license from IHS
Not for Resale

TABLE C.5.1
SPECIFIED OPERATING CONDITIONS AND PREDICTED CONDITIONS

	Inlet	Discharge
Pressure, psia	200	650
Temperature, °R	575	704.8
Specific volume ft³/lbm	0.7578	0.2602
Z	0.8768	0.7981
Viscosity centipoise	0.01021	0.01373
Specific heat Btu/lbm-°R	0.4894	0.6266
Specific heat ratio	1.128	1.098
Sonic velocity ft/sec	830.	820.
Enthalpy Btu/lbm	164.9	209.8
Entropy Btu/lbm-°R	1.577	1.592

Gas properties: Hydrocarbon mixture
Critical pressure: 646.4 psia
Critical temperature: 577.2 °R
Critical specific volume: 0.7943 ft³/lbm
Mol weight: 35.67
Volume flow rate: 22734 cfm
Mass flow rate: 30000 lbm/min
Polytropic efficiency: 0.781
Polytropic head: 27310 ft-lbf/lbm
Speed: Gas 3600 rpm
Mechanical 100 hp
Mechanical design: Max. temp 350 °F
Max. pressure 900 psia
Max. speed 3775 rpm
1st critical speed: 2600 rpm
2nd critical speed: 4700 rpm

Impeller	1st	2nd	3rd	4th	5th
Diam., in.	36	36	36	36	36
Tip Width, in.	2.5	2.0	1.75	1.5	1.25
ϵ, in.	0.000125				

for R134a. The test specific volume ratio compared to specified indicated that the R134a gas conditions are very close (within the accuracy of estimated gas properties) to that of the specified.

Further check on the assumed efficiency also indicated it was within 4 percent of specified. The polytropic head was computed along with Reynolds number correction factor and a new speed was also computed. Further check of this speed against the critical speed of the unit indicated a margin of 8.6 percent, which should be within a reasonable range for unit operation; therefore, R134a could be used.

Table C.5.6 has the basic R22 check data. The test specific volume ratio is considerably off from that specified. The test speed is 2556 rpm which is too close to the first critcal speed.

This problem demonstrated the extent of calculation necessary to come up with the test speed for a given unit. The final test power may be increased by changing the inlet pressure and then re-computing all the values. Effectively the temperature ratio should remain constant and test speed may vary slightly with increase of inlet pressure.

The test speed computed is only an estimate. Once the unit is on test, the q/N should be set and the specific volume ratio, r_v, checked from test data. If the volume ratio is not correct, the test speed should be adjusted and the q/N reset.

Copyright ASME International
Provided by IHS under license with ASME
No reproduction or networking permitted without license from IHS
Not for Resale

TABLE C.5.2
GENERAL FLOW CHART FOR TEST GAS SELECTION

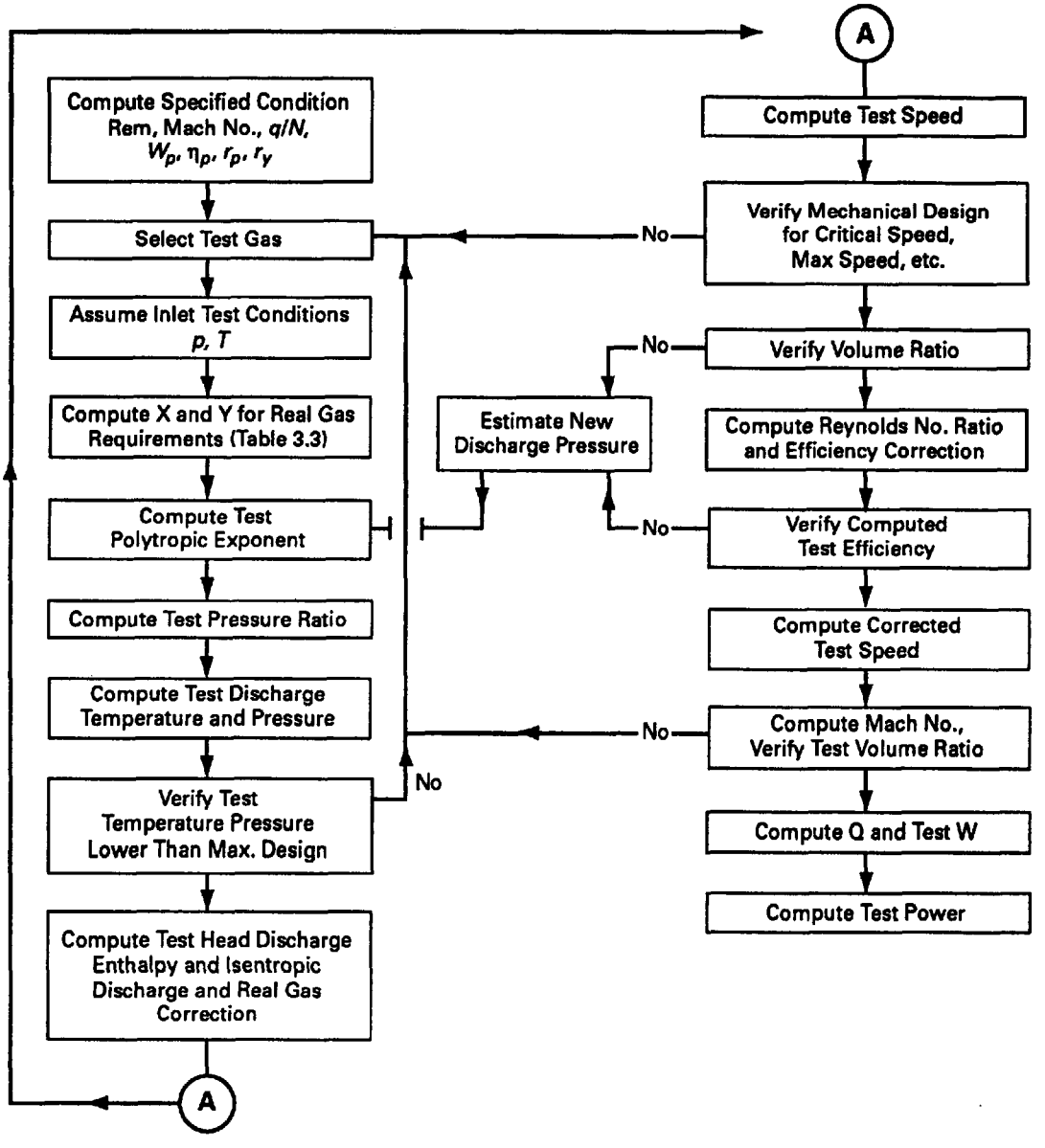

Copyright ASME International
Provided by IHS under license with ASME
No reproduction or networking permitted without license from IHS
Not for Resale

TABLE C.5.3
TEST GAS INLET CONDITIONS

	N_2	CO_2	R134a	R22
p_i, psia	20	20	20	20
T_i, °R	560	560	560	560
v_i, ft³/lbm	10.73	6.778	2.8716	3.4122
Z_i	1.00	0.993	0.975	0.982
μ, centipoise	0.017	0.015	0.0109	0.011
c_p, Btu/lbm-°R	0.2499	0.2103	0.2098	0.161
k	1.396	1.273	1.098	1.166
a_i, ft/sec	1178.	894.	538.8	598.5
T_c, °R	227.4	547.7	673.8	204.8
p_c, psia	493.	1069.9	590.3	721.9
MW	28.01	44.01	102.	86.48
h_i, Btu/lbm		—	122.3	121.2
s_i		—		
X_i	—		0.07	0.02
Y_i	—		1.027	1.03

GENERAL NOTE: It is recognized that there is a potential environmental problem of using refrigerant 22. The use here is only to demonstrate the calculation method.

TABLE C.5.4
FIRST PASS FOR GAS SELECTION

	Specified Gas	N_2	CO_2	R134a	R22
r_p	3.25	5.358	4.309	3.296	3.551
r_v	2.912	2.912	2.912	2.912	2.912
r_t	1.226	1.840	1.495	1.157	1.261
k_{max}/k_{min}	1.0273	—			
η_p	0.781	0.781	0.781	0.781	0.781
X_{min}/X_{max}	0.509/1.056	—	0.01	0.08	0.02
Y_{min}/Y_{max}	1.150/1.287	—	1.01	1.03	1.03
Calc type	Real	Ideal	Real	Real	Real
n	1.1027	1.574	1.366	1.116	1.185
W_p, ft-lbf/lbm	27310.0	71422	34860	10499	13750
Rem	2.266×10^7	—	—	3.473×10^6	
Mm	0.681	—	—	0.65	
U ft/sec	565.5	—	—	350	
p_d, psia		107.2	86.2	65.9	70.0
T_d, °R		1030. [Note (1)]	836.6 [Note (1)]	648	706
v_d ft³/lbm		—	—	0.983	
N, rpm	3600	5822 [Note (1)]	4067 [Note (1)]	2232	2554 [Note (3)]

NOTES:
(1) Test values exceed the mechanical design limit for the tested unit.
(2) No Reynolds number correction or verification of volume ratio, efficiency, or real gas correction.
(3) Test speed too close to rotor critical speed.

Copyright ASME International
Provided by IHS under license with ASME
No reproduction or networking permitted without license from IHS
Not for Resale

TABLE C.5.5

	Specified Gas	R134a
Polytropic work factor f	1.004	1.01
Rem_t/Rem_{sp}		0.153
Allowable range (minimum)		0.1
r_v check	2.912	2.92
η_p check	0.781	0.779
W_p, ft lbf/lbm	27310	10605
Rem_{corr}		1.003
N, rpm	3600	2247
Mm	0.681	0.655
q	22734	14190
hp	31790	2039

Supplement C.5.A

Predicted Conditions Specified Gas

Pressure Ratio $r_p = p_d/p_i = 650/200 = 3.25$
Volume Ratio $r_v = v_i/v_d = 0.7578/0.2602 = 2.912$
$k_{max}/k_{min} = 1.1283/1.0975 = 1.028$
$q/N = 22734/3600 = 6.315$

Check Specified Gas for Type of Calculation

Reduced Temperature $= R_{Tmin} = T_i/T_{crit} = 0.996$
$R_{Tmax} = T_d/T_{crit} = 1.221$

Reduced Pressure $= R_{pmin} = p_i/p_{crit} = 0.309$
$R_{pmax} = p_d/p_{crit} = 1.006$

From Schultz Charts $= X_{min} = 0.509\ Y_{min} = 1.150$
$X_{max} = 0.056\ Y_{max} = 1.287$

Based on Table 3.3

k_{max}/k_{max} OK
X_{max}, Y_{max} No
X_{min}, Y_{min} OK

Use Real Gas Calculation Method for Specified Gas

$$\text{Sonic Velocity } a_i = \sqrt{\frac{k_i\, p_i\, v_i\, g_c\, 144}{Y_i}}$$

$$= \sqrt{\frac{1.128\ (200)\ (0.7578)\ (32.2)\ 144}{1.15}}$$

$$= 830.2 \text{ ft/sec.}$$

Copyright ASME International
Provided by IHS under license with ASME
No reproduction or networking permitted without license from IHS
Not for Resale

Tip Speed

$$U = \frac{\pi DN}{720}$$

$$= \frac{\pi\,(36)\,(3600)}{720} = 565.5\ \frac{\text{ft}}{\text{sec}}$$

Machine Mach Number

$$Mm = U/a_i$$

$$= 565.5/830.2 = 0.681$$

Machine Reynolds Number

$$\text{Rem} = U_1 b_1/\mu v$$

$$\mu = 0.01021 \text{ centipoise} = 0.01021/(1488.2)$$

$$= 6.86 \times 10^{-6} \text{ lbm/ft-sec}$$

$$\text{Rem} = \frac{(565.5)\left(\frac{2.5}{12}\right)}{6.86 \times 10^{-6}\,(0.7678)} = 2.266 \times 10^{7}$$

Test Gas Nitrogen (N_2)

Initial Estimate: Assume Ideal Gas

$$Y = 1.0 \qquad X = 0.0 \qquad f = 1.0 \qquad \text{Rem}_{\text{corr}} = 1.0$$

Compute Polytropic Exponent

$$n_{p_t} = n_{p_{sp}} = 0.781$$

$$\frac{n-1}{n} = \frac{1}{\eta_p}\frac{k-1}{k}$$

Copyright ASME International
Provided by IHS under license with ASME
No reproduction or networking permitted without license from IHS
Not for Resale

$$= \frac{1}{0.781} \frac{(1.396 - 1)}{1.396} = 0.3632$$

$$n_t = 1.574$$

Compute Test Gas Pressure Ratio

$$r_{v_t} = r_{v_{sp}}$$

$$(r_{p_{sp}})^{\frac{1}{n_{sp}}} = (r_{p_t})^{\frac{1}{n_t}}$$

$$r_{p_t} = (r_{p_{sp}})^{\frac{n_t}{n_{sp}}}$$

$$= 3.25^{\frac{1.574}{1.1027}} = 5.358$$

$$p_{d_t} = r_{p_t}\, p_{i_t} = 107.2 \text{ psia}$$

$$r_{t_t} = (r_{p_t})^{\frac{n-1}{n}} 5.358^{0.3632} = 1.840$$

$$T_{d_t} = T_{i_t} = r_{t_t} = 1030R \text{ (570°F)}$$

$$v_i = \frac{R\, T_{i_t}}{\rho_{i_t}} = \frac{\left(\frac{1545}{28.01}\right)(560)}{144\ (20)} = 10.725$$

Copyright ASME International
Provided by IHS under license with ASME
No reproduction or networking permitted without license from IHS
Not for Resale

Test Polytropic Head

$$W_p = \frac{n}{n-1} p_i v_i \left(r_p^{\frac{n-1}{n}} - 1\right) 144$$

$$W_p = \frac{1.5704}{1.5704 - 1} (20)\ 10.725\ (5.358^{0.3632} - 1)\ 144$$

$$= 71422 \text{ ft-lbf/lbm}$$

Test Speed

$$\frac{W_{p_{sp}}}{N_{sp}^2} = \frac{W_{p_t} \text{Rem}_{corr}}{N_t^2}$$

$$N_t = N_{sp} \sqrt{\frac{W_{p_t} \text{Rem}_{corr}}{W_{p_{sp}}}}$$

$$N_t = 3600 \sqrt{\frac{71422\ (1.0)}{27310}} = 5822 \text{ rpm}$$

NOTE: Test temperature exceeds mechanical design limit. Test speed exceeds mechanical design limit.

Test Gas CO_2

Initial Estimate:

$$\eta_{p_t} = \eta_{s_{sp'}} \qquad \text{Rem}_{corr} = 1.0, \qquad f = 1.0$$

Assume Nonideal Gas

Use inlet conditions for initial calculations.
Reduced Temperature = $R_t = T_i / T_{crit} = 560/547.7 = 1.022$
Reduced Pressure = $R_p = p_i / p_{crit} = 20/1069.9 = 0.0187$
$X = 0.01$ $Y = 1.01$ $Z = 0.993$ $c_p = 0.2103$

Copyright ASME International
Provided by IHS under license with ASME
No reproduction or networking permitted without license from IHS
Not for Resale

Compute Polytropic Exponent

$$n = \frac{1}{Y - m\,(1 + X)}$$

$$m = \frac{Z\,R}{(J\,c_p\,M\,W)}\left(\frac{1}{\eta_p} + X\right)$$

$$= \frac{0.993\ (1545)}{778.17\ (0.2103)\ (44.01)}\left(\frac{1}{0.781} + 0.01\right)$$

$$= 0.2749$$

$$n = \frac{1}{1.01 - 0.2755\ (1 + 0.01)} = 1.3655$$

Compute Test Pressure Ratio

$$r_{p_t} = r_{p_{sp}}^{\frac{n_t}{n_{sp}}} = 3.25^{\frac{1.3655}{1.1027}} = 4.304$$

$$p_{d_t} = r_p p_{i_t} = 4.304 \times 20 = 86.1 \text{ psia}$$

Compute Test Temperature Ratio

$$r_t = (r_p)^m$$

$$= (4.304)^{0.2749} = 1.494$$

$$T_{d_t} = r_t\,T_i = 1494\ (560\ °\text{R}) = 836.6\ °\text{R}$$

$$v_{i_t} = \frac{Z\,T_{i_t}}{p_{i_t}} = \frac{0.993\left(\frac{1545}{44.01}\right)(560)}{144\ (20)} = 6.778$$

Copyright ASME International
Provided by IHS under license with ASME
No reproduction or networking permitted without license from IHS
Not for Resale

Test Head

$$w_{p_t} = \frac{n}{n-1} p_i v_i \left(r_p^{\frac{n-1}{n}} - 1 \right) 144$$

$$W_{p_t} = \left(\frac{1.3655}{1.3655 - 1} \right) 20\ (6.778)\ (4.304^{0.2677} - 1)\ 144$$

$$= 34860 \text{ ft-lbf/lbm}$$

Test Speed

$$N_t = N_{sp} \sqrt{\frac{W_{p_t}\, \text{Rem}_{corr}}{W_{p_{sp}}}}$$

$$= 3600 \sqrt{\frac{34860}{27310}} = 4067 \text{ rpm}$$

NOTE: Test temperature is marginal. Test speed exceeds mechanical design.

Test Gas R134a

Initial Estimate

$$\eta_{pt} = \eta_{psp},\ \text{Rem}_{corr} = 1.0,\ f = 1.0$$

Assume Nonideal Gas

Use Inlet Conditions for Initial Assumptions

$$\text{Reduced Temperature} = R_t = T_i/T_{crit}$$

$$= 560/673.8 = 0.8311$$

$$\text{Reduced Pressure} = R_p = p_i/p_{crit}$$

$$= 20/590.3 = 0.0339$$

$$X = 0.07 \qquad Y = 1.027$$

Copyright ASME International
Provided by IHS under license with ASME
No reproduction or networking permitted without license from IHS
Not for Resale

Compute Polytropic Exponent

$$m = \frac{Z R}{(J c_p M W)} \left(\frac{1}{\eta_p} + X\right)$$

$$= \frac{0.975\ (1545)}{778.17\ (0.2098)\ (102)} \left(\frac{1}{0.781} + 0.07\right)$$

$$= 0.12215$$

$$n = \frac{1}{Y - m\ (1 + X)}$$

$$= \frac{1}{1.027 - 0.12215\ (1 + 0.07)}$$

$$= 1.1157$$

Compute Test Gas Pressure Ratio

$$r_{p_t} = r_{p_{sp}}^{\frac{n_t}{n_{sp}}}$$

$$r_{p_t} = 3.25^{\frac{1.1157}{1.1027}} = 3.2955$$

$$p_d = r_p\, p_i$$

$$= 3.2955 \times 20 = 65.91 \text{ psia}$$

Compute Test Gas Temperature Ratio

$$r_t = r_{p_t}^m$$

$$= (3.2955)^{0.12215} = 1.1568$$

$$T_d = r_{t_t}\, T_i = 1.1568 \times 560 = 647.8\ ^\circ\text{R}\ (187.8\ ^\circ\text{F})$$

Copyright ASME International
Provided by IHS under license with ASME
No reproduction or networking permitted without license from IHS
Not for Resale

Compute Test Head

$$v_{i_t} = \frac{Z\,T_{i_t}}{\rho_{i_t}} = \frac{0.9753\left(\frac{1545}{102}\right)(560)}{144\,(20)} = 2.8716$$

$$W_p = \frac{n}{n-1}\,p_i\,v_i\,(r_p^{\frac{n-1}{n}} - 1)\,144$$

$$W_p = \left(\frac{1.1157}{1.1157-1}\right)20\,(2.8716)\left(3.2955^{\left(\frac{1.1517}{1.1157\text{-}1}\right)} - 1\right)144 = 10499\ \frac{\text{ft-lbf}}{\text{lbm}}$$

Compute Test Speed

$$N_t = n_{sp}\sqrt{\frac{W_{pt}\,\text{Rem}_{corr}}{W_{p_{sp}}}}$$

$$N_t = 3600\sqrt{\frac{10499\,(1.0)}{27310}} = 2232\ \text{rpm}$$

Check Volume Ratio

$$Z_d = 0.951$$

$$v_d = \frac{Z\,R\,T}{144\,p\,M\,W} = \frac{0.951\,(1545)\,647.8}{144\,(65.91)\,102} = 0.9832\ \frac{\text{ft}^3}{\text{lb}}$$

$$r_v = 2.8716/0.9832 = 2.921$$

Compute Polytropic Work (Real Gas) Factor

Isentropic

$P = 65.91$ psia
$T' = 168.7$ °F (628.7 °R)
$v' = 0.9205$ ft³/lbm
$h' = 135.46$ Btu/lbm
$n_s = \ln r_p / \ln r_v'$
$r_v' = v_i / v_d' = 2.8716 / 0.9205 = 3.1196$
$n_s = \ln 3.2955 / \ln 3.1196 = 1.0482$

Copyright ASME International
Provided by IHS under license with ASME
No reproduction or networking permitted without license from IHS
Not for Resale

$W_s = J\,(h'_d - h_i) = (135.46 - 122.3)\ 778.17$
$= 10241$ ft-lbf/lbm

$$f = \frac{W_s}{\frac{n_s}{n_s - 1}\,(p_d\, v'_d - p_i\, v_i)\ 144}$$

$$f = \frac{10241}{\frac{1.0482}{1.0482 - 1}\,[65.91\ (0.9205) - 20\ (2.8716)]\ 144} = 1.01$$

Compute Reynolds Number and Reynolds Number Correction
Use Preliminary Test Speed
$\text{Rem} = Ub/\mu v$
$U = \pi DN/720$
$= \pi\ 36\ (2232)/720$
$= 350.6$ ft/sec.

$$\text{Rem}_t = \frac{350.6\left(\frac{2.5}{12}\right)}{7.324 \times 10^{-6}\ (2.8716)} = 3.473 \times 10^6$$

Reynolds Number Ratio

$$\frac{\text{Rem}_t}{\text{Rem}_{sp}} = \frac{3.473 \times 10^6}{2.266 \times 10^7} = 0.153$$

Allowable Ratio

$$\text{Rem}_t/\text{Rem}_{sp} \geq 0.1$$

Therefore, the Reynolds number ratio of 0.153 meets conditions.
Compute Reynolds number conditions.

$$(1 - \eta_p)_{sp} = (1 - \eta_p)_t \frac{\text{RA}_{sp}}{\text{RA}_t} \frac{\text{RB}_{sp}}{\text{RB}_t}$$

$$\text{RA} = 0.66 + 0.934 \frac{(4.8 \times 10^6\ b)^{RC}}{\text{Rem}}$$

$\text{RB} = \log\ (0.000125 + 13.67/\text{Rem})/\log\ (e + 13.67/\text{Rem})$
$\text{RC} = 0.988/(\text{Rem})^{0.243}$
$\text{RC}_{sp} = 0.01612$

Copyright ASME International
Provided by IHS under license with ASME
No reproduction or networking permitted without license from IHS
Not for Resale

$$RA_{sp} = 0.66 + 0.934\left[\frac{\left(4.8 \times 10^6 \times \frac{2.6}{12}\right)^{0.1612}}{2.266 \times 10^7}\right] = 1.548$$

$$RB_{sp} = 1.0$$

$$RC_t = \frac{0.988}{[3.473 \times 10^6]^{0.243}} = 0.02543$$

$$RA_t = 0.66 + 0.934\left[\frac{\left(4.8 \times 10^6 \times \frac{2.5}{12}\right)}{3.473 \times 10^6}\right]^{0.02543} = 1.565$$

$$RB_t = 1.0$$

$$(1 - \eta_p)_{sp} = (1 - \eta_p)_t \left(\frac{1.548}{1.565}\right)\left(\frac{1.0}{1.0}\right)$$

$$(1 - \eta_p)_t = (1 - .781)_{sp} \left(\frac{1.565}{1.548}\right)\left(\frac{1.0}{1.0}\right) = 0.224$$

$$\eta_{p_t} = 0.7786$$

$$Rem_{corr} = 0.781/0.7786 = 1.003$$

$$W_P = \left(\frac{n}{n-1}\right)^f p\, v\, (r_p^{\frac{n-1}{n}} - 1)\, 144$$

$$= \frac{1.1157}{0.1157}(1.01)\,(20)\,(2.8716)\,[3.2955^{\frac{0.1157}{1.1157}} - 1]\,(144)$$

$$= 10605 \text{ ft-lbf/lb}$$

Correct Preliminary Test Speed

$$N_t = N_{sp}\sqrt{\frac{W_{p_t}\, Rem_{corr}}{W_{p_{sp}}}}$$

$$N_t = 3600\sqrt{\frac{10605\ (1.003)}{27310}} = 2247 \text{ rpm}$$

Copyright ASME International
Provided by IHS under license with ASME
No reproduction or networking permitted without license from IHS
Not for Resale

NOTE: Test speed within 8-1/2 percent of 1st rotor Critical Speed

Calculate Mach Number

$Mm = U/a_i$

$U = \pi DN/720$

$= [\pi 36(2247)]/720$

$= 353$ ft/sec.

$Mm = 353/539$

$= 0.655$

Mach Number Ratio Difference

$$Mm_t - Mm_{sp} = 0.655 - 0.681 = -0.026$$

Test Gas R22 (Chlorodifluoromethane)

Initial estimate

$\eta_{p_t} = \eta_{p_{sp}}$

$\text{Rem}_{\text{corr}} = 1.0$

$f = 1.0$

Use real gas calculation

Use inlet conditions for initial estimate

Compute Polytropic Exponent

$$X = 0.02 \quad Y = 1.03 \quad c_p = 0.161 \quad MW = 86.48 \quad Z = 0.982$$

$$m = \frac{Z\,R}{J\,c_p\,M\,W}\left(\frac{1}{\eta_p} + X\right)$$

$$m = \frac{0.982\ (1545)}{778.17\ (0.161)\ 86.48}\left(\frac{2}{0.781} + 0.02\right) = 0.1821$$

$n = 1/[Y - m\ (1 + X)]$

$n = 1/[1.03 - 0.1821\ (1 + 0.02)]$

$n = 1.1845$

Compute Test Pressure Ratio

$$r_{p_t} = r_{p_{sp}}^{\frac{n_t}{n_{sp}}}$$

$$r_{p_t} = 3.25^{\frac{1.1845}{1.1027}} = 3.546$$

$$p_d = r_{p_t}\,p_i = 3.546\ (20) = 70.9 \text{ psia}$$

Copyright ASME International
Provided by IHS under license with ASME
No reproduction or networking permitted without license from IHS
Not for Resale

Compute Test Temperature Ratio

$$r_{t_t} = r_{p_t}^{m} = 3.546^{(0.1821)} = 1.259$$

$$T_d = r_{t_t} T_i = 1.259\ (560) = 705°R(245°F)$$

Compute Test Head

$$v_{i_t} = \frac{Z\ T_{i_t}}{p_{i_t}} = \frac{0.982 \left(\frac{1545}{86.48}\right) (560)}{144\ (20)} = 3.4113$$

$$W_{p_t} = \left(\frac{n}{n-1}\right) p_t\ v_{i_t} \left(r_{p_t}^{\frac{n-1}{n}} - 1\right) 144$$

$$= \left(\frac{1.1845}{1.1845 - 1}\right) (20)\ (3.4113) \left(3.545^{\left(\frac{1.1845 - 1}{1.1845}\right)} - 1\right) 144$$

$$= 13750\ \text{ft-lbf/lbm}$$

Compute Test Speed

$$N_t = N_{sp} = \sqrt{\frac{W_{p_t}\ \text{Rem}_{\text{corr}}}{W_{s_{sp}}}}$$

$$= 3600 \sqrt{\frac{13750\ (1.0)}{27310}}$$

$$= 2554\ \text{rpm}$$

Test speed is too close to the first critical of 2600 rpm.

Copyright ASME International
Provided by IHS under license with ASME
No reproduction or networking permitted without license from IHS
Not for Resale

SAMPLE CALCULATION C.6
TYPE 2 TEST USING REAL GAS EQUATIONS FOR DATA REDUCTION

A mixed hydrocarbon compressor which was set up in the Sample Calculation C.5 was tested on refrigerant 134a using a Type 2 test.

Table C.6.1 outlines the conditions for which this compressor was designed. It tabulates the inlet and discharge conditions, as well as the isentropic discharge conditions.

Table C.6.2 shows the gas composition and critical properties for this hydrocarbon mixture. The molecular weight and the calculated gas constant are shown in this table.

Table C.6.3 shows the derived design functions, specifically pressure ratio, temperature ratio, volume ratio, as well as polytropic exponent, volume flow, head, efficiency, and power. The test is supposed to verify these values. The calculation of these values is shown in Sample Calculation C.5.

The unit was tested on refrigerant 134a.[1] The test data are shown in Table C.6.4. It was at a test speed of 2245 rpm. The inlet pressure was held at 20 psia at an inlet temperature of 100°F. Discharge conditions achieved were 67.5 psia and 187.4°F. The data shown is the average of the actual test data readings. It is assumed that all scatter was within the allowable test requirements for these data point positions.

The derived test functions, pressure ratio, temperature ratio, volume flow ratio, etc., are shown in Table C.6.5. This is the reduced data from the test point of Table C.6.4. The calculations are shown in Supplement C.6.A for obtaining each of the individual items.

TABLE C.6.1
SPECIFIC DESIGN CONDITIONS

Mass Flow 30,000 — lbm/min
Speed 3,600 — rpm

		Inlet	Discharge	Isentropic
Pressure, psia	p	200.	650	650
Temperature	T	115	244.8	227.7
Specific volume, ft³/lbm	v	0.7578	0.2602	0.2465
Compressibility factor	Z	0.8768	0.7981	0.7749
Viscosity, centipoise	μ	0.01021	0.01373	
Specific heat, Btu/lbm-°R	c_p	0.4894	0.6266	
Specific heat ratio	k	1.1283	1.0975	
Sonic velocity, ft/sec	a	830	820	
Enthalpy, Btu/lbm	h	164.9	209.84	199.05
Entropy, Btu/lbm-°R	s	1.577	1.592	1.577

[1] It is recognized that there is a potential environmental problem of using refrigerants. The use here is only to demonstrate the calculation method.

Copyright ASME International
Provided by IHS under license with ASME
No reproduction or networking permitted without license from IHS
Not for Resale

TABLE C.6.2
GAS COMPOSITION AND PROPERTIES

Composition:	Methane	20%	
	Ethane	25%	
	Propane	50%	
	N-Butane	5%	
Critical properties:			
	p_c	=	646.4 psia
	T_c	=	577.2 °R
	v_c	=	0.7943 ft³/lbm
Molecular weight		=	35.67
Gas constant R		=	43.31 ft-lbf/lbm °R

TABLE C.6.3
DERIVED DESIGN FUNCTIONS

Pressure ratio	3.25
Temperature ratio	1.226
Volume ratio	2.912
k_{max}/k_{min}	1.0281
q, ICFM	22734
q/N, ICFM/rpm	6.315
Reduced temp min/max	0.996/1.221
Reduced pressure min/max	0.309/1.006
Schultz factors	
X_{min}/X_{max}	0.509/1.056
Y_{min}/Y_{max}	1.150/1.287
1st stage tip speed, ft/sec	565.5
Machine Mach no.	0.681
Machine Reynolds no.	2.266×10^7
Polytropic exponent n	1.1027
Isentropic exponent n_s	1.0495
Polytropic work factor f	1.004
Isentropic head, ft-lbf/lbm	26570
Polytropic head, ft-lbf/lbm	27310
Polytropic efficiency	0.781
Unit gas power, hp	31790

Table C.6.6 compares the test data and the test data converted to specified operating conditions with the predicted performance at the specified operating conditions. Supplement C.6.B demonstrates the calculations for the conversion. The calculation of discharge conditions, pressure, temperature, and volume is shown in Supplement C.6.C, which also illustrates the use of an iterative procedure.

As can be seen the inlet capacity for the converted test conditions was within 1 percent of the original specified design point and the head was within 2 percent. The converted specific volume ratio was within the specified 4 percent allowed.

Supplement C.6.A

Calculations: Derived Test Functions

Copyright ASME International
Provided by IHS under license with ASME
No reproduction or networking permitted without license from IHS
Not for Resale

TABLE C.6.4
TEST DATA

Mass flow 4,923 — lbm/min
Speed 2,245 — rpm

		Inlet	Discharge	Isentropic
Pressure, psia	p	20	67.5	67.5
Temperature	T	100	187.4	167.49
Specific volume, ft³/lbm	v	2.8716	0.9639	0.9234
Compressibility factor	Z	0.975	0.955	0.944
Viscosity, centipoise	μ	0.0109		
Specific heat, Btu/lbm-°R	c_p	0.2098		
Specific heat ratio	k	1.098		
Sonic velocity, ft/sec	a	538.8		
Enthalpy, Btu/lbm	h	122.3	140.04	135.80
Entropy, Btu/lbm-°R	s	0.2639	0.2731	0.2639

Gas — Refrigerant 134a
Mole weight 102
p_c 590.3 psia
T_c 213.8 °F

TABLE C.6.5
DERIVED TEST FUNCTIONS

Pressure ratio	r_p	3.375
Temperature ratio	r_t	1.156
Volume ratio	r_v	2.980
q ICFM		14143
q/N ICFM/rpm		6.3
1st stage tip speed (ft/sec)	U	352.6
Machine Mach no.	Mm	0.654
Machine Reynolds no.	Rem	3.49×10^6
Isentropic exponent	n_s	1.0718
Polytropic work factor	f	1.0017
Polytropic exponent	n	1.1139
Polytropic head (ft-lbf/lbm)	W_p	10735.2
Polytropic efficiency	η_p	0.778
Unit gas power (hp)	P_g	2059

Pressure Ratio $$r_p = p_d/p_i = \frac{67.5}{20}$$

$$= 3.375$$

Temperature Ratio $$r_t = T_d/T_i = \frac{(460 + 187.4)}{(460 + 100)}$$

$$= \frac{647.4}{560}$$

$$= 1.156$$

Copyright ASME International
Provided by IHS under license with ASME
No reproduction or networking permitted without license from IHS
Not for Resale

TABLE C.6.6
DATA SUMMARY

		Test Data	Test Data Converted To Specified Operating Conditions	Predicted Performance At Specified Operating Conditions
N	rpm	2245	3600	3600
q	ICFM	14137	22670	22734
q/N		6.297	6.297	6.315
W_p	ft-lbf/lbm	10736	27690	27310
η_p		0.778	0.780	0.781
P_g	hp	2059	32180	31790
p_i	psia	20	200	200
p_d	psia	67.5	660.8	650
t_i	°F	100	115	115
t_d	°F	187.4	246.7	244.8
v_i	ft³/lbm	2.8716	0.7578	0.7578
v_d	ft³/lbm	0.9635	0.2562	0.2602
v_r		2.98	2.958	2.912
h_i	Btu/lbm	122.3	164.9	164.9
h_d	Btu/lbm	140.04	210.5	209.84

$$\text{Inlet Specific Volume} \quad v_i = \frac{Z_i R T_i}{144 p_i} = \frac{0.975 \left(\frac{1545}{102}\right) (560)}{144\ (20)} = 2.8716$$

$$\text{Discharge Specific Volume} \quad v_d = \frac{Z_d R T_d}{144 p_d} = \frac{0.955 \left(\frac{1545}{102}\right) (647.4)}{144\ (67.5)} = 0.96347$$

$$\text{Specified Volume Ratio} \quad r_v = v_i / v_d = \frac{2.8716}{0.96347}$$

$$= 2.9805$$

$$\text{Inlet Capacity} \quad q = m v_i = 4923 \times 2.8716 = 14137 \text{ ICFM}$$

$$\text{Capacity/Speed Ratio} \quad q/N = \frac{14137}{2245}$$

$$= 6.297$$

Copyright ASME International
Provided by IHS under license with ASME
No reproduction or networking permitted without license from IHS
Not for Resale

1st Stage Tip Speed $$U = \frac{\pi D N}{720} = \frac{\pi\, 36.0 \times 2245}{720}$$

$$= 352.6 \text{ ft/sec}$$

Machine Mach number $$Mm = U/a = \frac{352.6}{538.8}$$

$$= 0.654$$

Machine Reynolds number $$\text{Rem} = Ub/\mu_v$$

$$= \frac{352.6\ (2.5/12)(1488.2)}{0.0109\ (2.8716)}$$

$$= 3.493 \times 10^6$$

Isentropic Exponent $$n_s = \ln (p_d/p_i)/\ln (v_i/v_d')$$

$$= \frac{\ln (67.5/20)}{\ln (2.8716/0.9234)}$$

$$= 1.07212$$

Polytropic Work Factor $$f = \frac{h_d' - h_i}{\frac{n_s}{n_s - 1}(p_d\, v_d' - p_i\, v_i)}$$

$$f = \frac{(138.50 - 122.3)\ 778.17}{\frac{1.07212}{0.07212}[67.5\ (0.9234) - 20\ (2.8716)]144} = 1.002$$

Polytropic Exponent $$n = \ln (r_p)/\ln(r_v) = \frac{\ln (3.3750)}{\ln (2.9805)}$$

$$= 1.1138$$

Copyright ASME International
Provided by IHS under license with ASME
No reproduction or networking permitted without license from IHS
Not for Resale

Polytropic Head $$W_p = f\left(\frac{n}{n-1}\right)(p_d v_d - p_i v_i)$$

$$= 1.002\left(\frac{1.1138}{0.113}\right)[67.5\ (0.96347) - 20\ (2.8716)]\ 144$$

$$= 10736 \text{ ft-lbf/lbm}$$

Polytropic Efficiency $$\eta_p = \frac{W_p}{h_d - h_i} = \frac{10736}{(140.04 - 122.3)\ 778.17}$$

$$= 0.7777$$

Gas Power $$P_g = \frac{W_p w}{\eta_p} = \frac{10737\ (4923)}{0.778\ (33000)}$$

$$= 2059 \text{ hp}$$

Supplement C.6.B

Calculation: Conversion From Test to Specified Performance

Inlet Capacity

$$W_p = \left(\frac{q}{N}\right)_t = \left(\frac{q}{N}\right)_{sp}$$

$$q_{sp} = q_t\left(\frac{N_{sp}}{N_t}\right)$$

$$= 14135\left(\frac{3600}{2245}\right) = 22670 \text{ ICFM}$$

Reynolds Number Correction for Efficiency

$$RC_t = \frac{0.988}{Rem_t^{0.243}}$$

$$= \frac{0.988}{(3.49 \times 10^6)^{0.243}} = 0.0254$$

Copyright ASME International
Provided by IHS under license with ASME
No reproduction or networking permitted without license from IHS
Not for Resale

$$RB_t = \frac{\log\left(0.000125 + \frac{13.67}{Rem_t}\right)}{\log\left(e + \frac{13.67}{Rem_t}\right)} = 1.0$$

$$RA_t = 0.66 + 0.934\left[\frac{4.8 \times 10^6 \times b}{Rem_t}\right]^{RC_t}$$

$$= 0.66 + 0.934\left[\frac{4.8 \times 10^6 \times \frac{2.5}{12}}{3.493 \times 10^6}\right]^{0.0254} = 1.565$$

$$RC_{sp} = \frac{0.988}{(Rem_{sp})^{0.243}} = \frac{0.988}{(2.266 \times 10^7)^{0.245}} = 0.01612$$

$$RA_{sp} = 0.66 + 0.934\left(\frac{4.8 \times 10^6 \times b}{Rem_{sp}}\right)^{RC_{sp}}$$

$$= 0.66 + 0.934\left[\frac{4.8 \times 10^6 \times \left(\frac{2.5}{12}\right)}{2.266 \times 10^7}\right]^{0.01612} = 1.548$$

$$RB_{sp} = 1.0$$

$$1 - \eta_{p_{sp}} = (1 - \eta_{p_t})\frac{RA_{sp}}{RA_t}\frac{RB_{sp}}{RB_t}$$

$$1 - \eta_{p_{sp}} = (1 - 0.7777)\frac{1.548}{1.565}\frac{1.0}{1.0}$$

$$1 - \eta_{p_{sp}} = 0.2199$$

Copyright ASME International
Provided by IHS under license with ASME
No reproduction or networking permitted without license from IHS
Not for Resale

$$\eta_{p_{sp}} = 0.780$$

$$\text{Rem}_{\text{corr}} = 1.003$$

Polytropic Head

$$\left(\frac{W_p}{N^2}\right)_{sp} = \text{Rem}_{\text{corr}} \left(\frac{W_p}{N^2}\right)_t$$

$$W_{p_{sp}} = W_{p_t} \left(\frac{N_{sp}}{N_t}\right)^2 \text{Rem}_{\text{corr}}$$

$$= 110736 \left(\frac{3600}{2245}\right)^2 1.003 = 27690 \frac{\text{ft-lbf}}{\text{lbm}}$$

Power

$$W_{sp} = q_t \left(\frac{N_{sp}}{N_t}\right) \left(\frac{1}{v_{i_{sp}}}\right)$$

$$= 14137 \left(\frac{3600}{2245}\right) \left(\frac{1}{0.7578}\right) = 29915$$

$$P_g = \frac{W_{p_{sp}} W_{sp}}{\eta_{sp}} = \frac{27690\ (29915)}{0.780\ (33000)} = 32180 \text{ hp}$$

Supplement C.6.C

The conversion from test conditions to computed specified conditions involves an iteration to obtain the discharge pressure from the known head and discharge enthalpy. The iteration procedure and calculation involves assuming a discharge pressure at the known discharge enthalpy and finding the corresponding temperature and specific volume. The polytropic exponent and polytropic head is then calculated for the assumed discharge pressure. This polytropic head is then compared to the actual and, if not the same, then a new discharge pressure is assumed. The new assumed pressure is evaluation for properties at the known discharge enthalpy, and a new discharge volume is evaluated and polytropic exponent are computed. This iteration procedure is continued until the conditions match the required head.

Copyright ASME International
Provided by IHS under license with ASME
No reproduction or networking permitted without license from IHS
Not for Resale

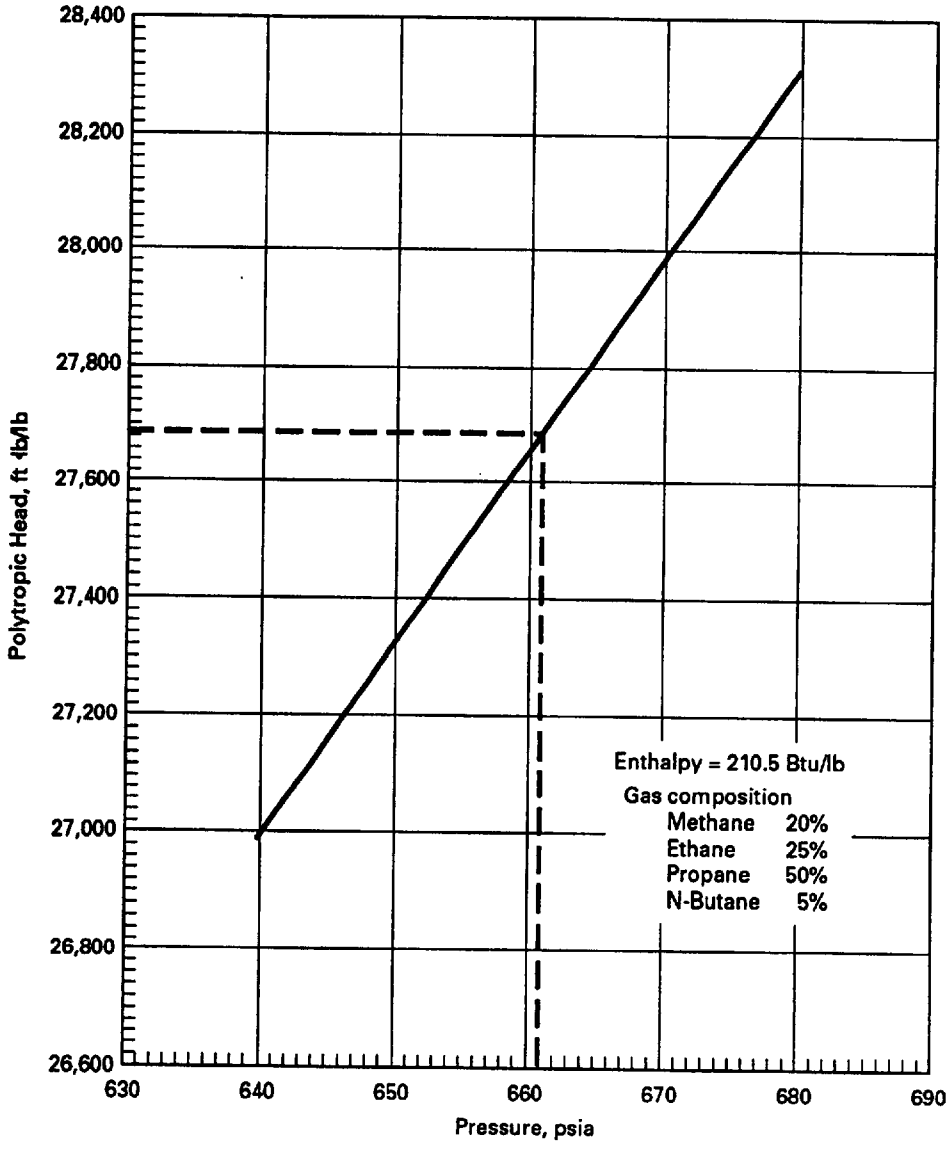

FIG. C.6.1 POLYTROPIC HEAD vs. PRESSURE, CONSTANT ENTHALPY

Figures C.6.1 and C.6.2 are a plot of discharge conditions at a constant enthalpy of 210.5 Btu/lbm. The final point at 27,605 ft-lb/lbm is 659 psia, 246.5°F. This method can either be computerized or done graphically as shown in this example.

Calculation Procedure:

Known

W_p = 27,690 ft-lbf/lbm
p_i = 200 psia
h_i = 164.9 Btu/lbm
v_i = 0.7578 ft^3/lbm

Copyright ASME International
Provided by IHS under license with ASME
No reproduction or networking permitted without license from IHS
Not for Resale

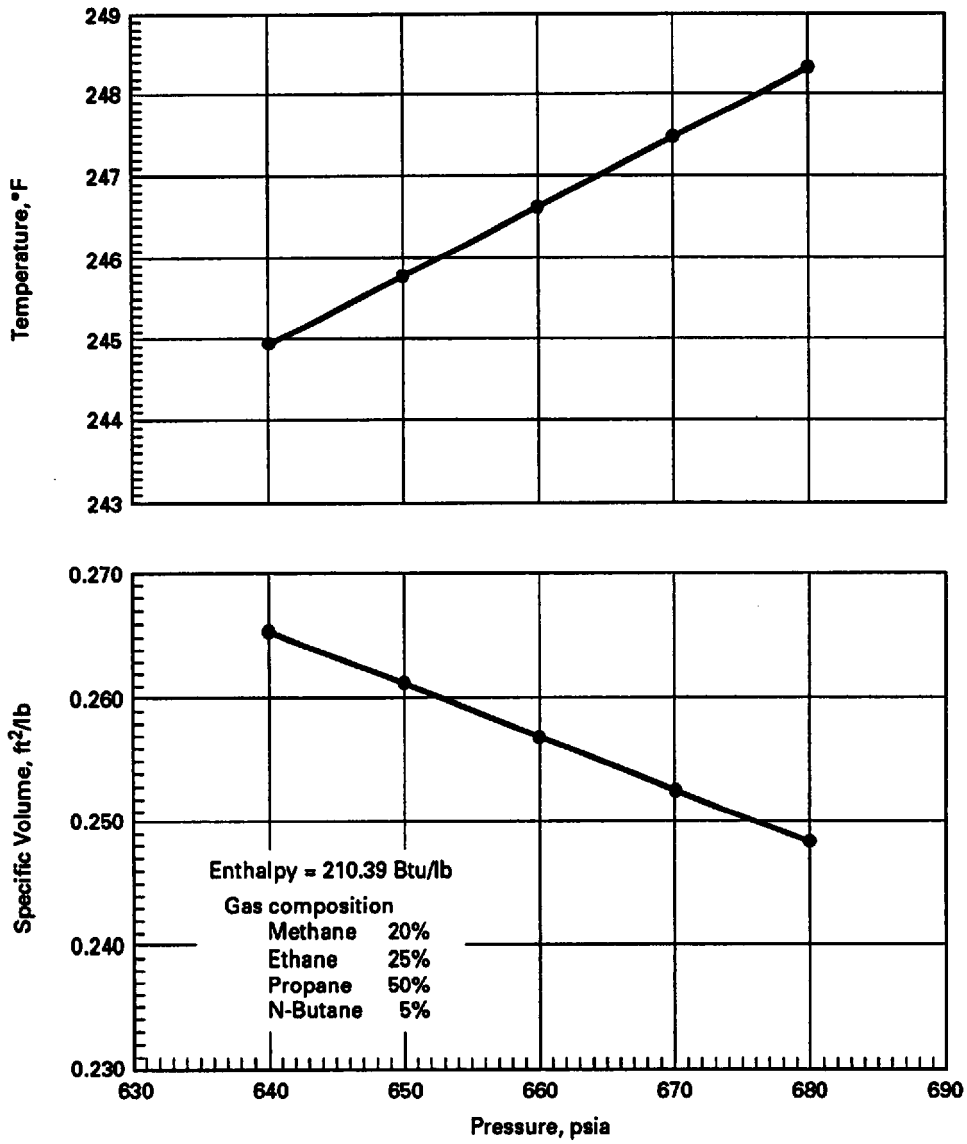

FIG. C.6.2 TEMPERATURE/SPECIFIC VOLUME vs. PRESSURE, CONSTANT ENTHALPY

Copyright ASME International
Provided by IHS under license with ASME
No reproduction or networking permitted without license from IHS
Not for Resale

$\eta_p = 0.780$
$f = 1.004$

Step 1 — Calculate discharge enthalpy.

$$\eta_p = \frac{W_p}{h_d - h_i}$$

$$h_d = \frac{W_p}{\eta_p} + h_i$$

$$= 165.9 + \frac{27690}{0.78\ (778.17)} = 210.5\ \frac{\text{Btu}}{\text{lbm}}$$

Step 2 — Assume a discharge pressure.

$$P_{out} = 660.8 \text{ psia}$$

Step 3 — For p_d and h_d, obtain the discharge volume for the properties.

$$v_d = 0.2562 \text{ ft}^3/\text{lbm}$$

Step 4 — Compute the polytropic exponent.
$n = \ln r_p / \ln r_v$
$r_p = 660.8/200 = 3.304$
$r_v = 0.7578/0.2562 = 2.958$
$n = \ln 3.25/\ln 2.905 = 1.102$

Step 5 — Compute the polytropic head.

$$W_p = \left(\frac{n}{n-1}\right) f(p_d v_d - p_i v_i)\ 144$$

$$= \left(\frac{1.102}{0.102}\right) 1.004\ [660.8\ (0.2562) - 200\ (0.7578)]\ 144$$

$$= 27705\ \frac{\text{ft-lbf}}{\text{lbm}}$$

Step 6 — Compare the computed W_p to the actual.
If they are within acceptable tolerance, then the discharge conditions are established.
If they do not match, then a new discharge pressure must be assumed and the procedure repeated from step 2 thru 6.

Copyright ASME International
Provided by IHS under license with ASME
No reproduction or networking permitted without license from IHS
Not for Resale

SAMPLE CALCULATION C.7
TREATMENT OF A TWO SECTION COMPRESSOR WITH EXTERNALLY PIPED INTERCOOLERS, CONDENSATE REMOVAL

This sample calculation illustrates the computational procedure, at specified operating conditions, for a multisection compressor having externally piped intercoolers.

Consider a two stage air compressor equipped with one intercooler and an aftercooler.

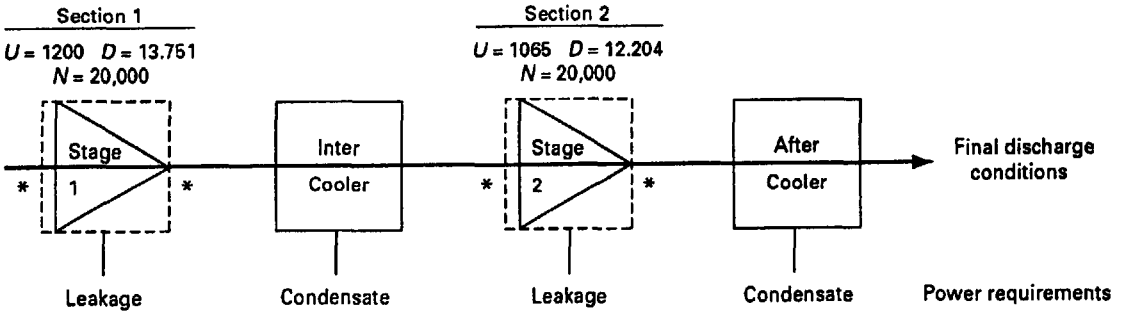

It is desired to calculate the compressor performance at the specified operating conditions shown. The compressor has been tested and the test data reduced to the following dimensionless form. The data was collected with pressure and temperature being measured at the inlet and outlet of each section. The flow coefficients were calculated based upon test rotor flow rates. The selection of test method and the means of establishing leakage and condensate flow rates were subject to prior agreement by parties to the test.

The first step in calculating the specified operating condition point of interest is to establish the first section performance, starting with the flow coefficient. Taking the saturation pressure of water vapor at 560°R to be approximately 0.949 lbf/in^2, with the remaining specified operating conditions at the inlet, we obtain

$$p_w = RHp_{sv} = 0.60\ (0.949) = 0.569\ \text{lbf/in}^2$$

$$p_a = 14.7 - 0.560 = 14.131\ \text{lbf/in}^2$$

and

$$HR = \frac{m_w}{m_{da}} = \frac{R_{da}}{R_w}\frac{P_w}{p_{da}} = \frac{53.34}{85.76}\frac{0.569}{14.131} = 0.0250\ \frac{\text{lbm } w}{\text{lbm } da}$$

Copyright ASME International
Provided by IHS under license with ASME
No reproduction or networking permitted without license from IHS
Not for Resale

The gas constant for the mixture is

$$R = (R_{da} + HR \cdot R_w)/(1 + HR) = [53.34 + 0.25\ (85.76)]/1.025$$

$$= 0.0250\ \text{lbm} \cdot w/\text{lbm} \cdot da$$

The rotor flow rate is the same as the inlet mass flow rate. The flow coefficient is then

$$\phi = \frac{w_{\text{rotor}}}{\rho_i 2\pi N\left(\frac{D}{12}\right)^3} = \frac{w_i R T_i}{144 p_i 2\pi N\left(\frac{D}{12}\right)^3}$$

$$= \frac{6.5\ (60)\ 54.13\ (560)}{144\ (14.17)\ 2\pi\ (20000)\left(\frac{13.751}{12}\right)^3} = 0.0295$$

With the flow coefficient established the corresponding polytropic efficiency, polytropic work coefficient, and total work input coefficient are read from the section 1 dimensionless curves (see Fig. C.7.1). That is $\eta_p = 0.83$, $\mu_p = 0.599$, and $\Omega_i = 0.722$ at $\phi = 0.0295$. To continue the calculations the properties of air at the specified operating conditions must be known. For the purpose of this example we assume that the air-water vapor mixture may be treated as an

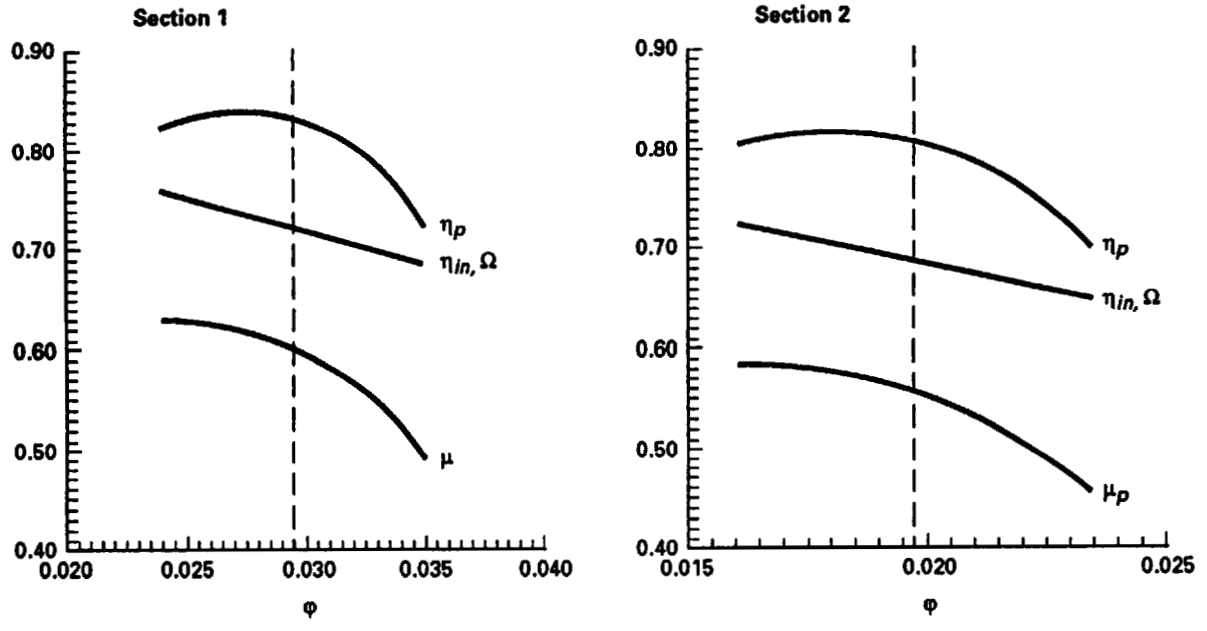

The Mm, Rem, k, and v_i/v_d for the data are assumed to match the specified operating conditions within Table 3.2 Limits. The Rem match is assumed sufficiently close so as to render the Reynolds number correction negligible.

FIG. C.7.1

Copyright ASME International
Provided by IHS under license with ASME
No reproduction or networking permitted without license from IHS
Not for Resale

ideal gas with constant specific heat. $k = 1.395$ is used as being representative of the end result which might be obtained by considering the properties of the constituent gases over the compression range. This value will be used for both sections for this example. The average constant pressure specific heat is

$$c_p = \frac{k}{k-1}\frac{R}{J} = \frac{1.395}{0.395}\left(\frac{54.13}{778}\frac{\text{Btu}}{\text{lbm} \cdot {}^\circ\text{R}}\right) = 0.2457\frac{\text{Btu}}{\text{lbm} \cdot {}^\circ\text{R}}$$

Using the polytropic efficiency of $\eta_p = 0.83$ gives

$$\frac{n}{n-1} = \eta_p\frac{k}{k-1} = 0.83\frac{1.395}{0.395} = 2.931$$

or, $n = 1.5178$.

Using the polytropic work coefficient of $\mu_p = 0.599$ gives

$$r_p = \left[1 + \frac{\mu_p \Sigma U^2}{\left(\frac{n}{n}-1\right) R\, T_i\, g_c}\right]^{\frac{n}{n-1}}$$

$$= \left[1 + \frac{0.599\ (1200)^2}{(2.931)\ 54.13\ (560)\ 32.174}\right]^{2.931} = 2.166$$

The discharge pressure is

$$p_d = r_p\, p_i = 2.166\ (14.7) = 31.84 \text{ psia}$$

The temperature ratio and discharge temperature are

$$r_t = r_p^{\left(\frac{n-1}{n}\right)} = 2.166^{\frac{1}{2.931}} = 1.302$$

and

$$T_d = r_t\, T_i = 1.302\ (560) = 729{}^\circ\text{R}$$

The power absorbed in the compressor section is obtained using the total work input coefficient $\Omega = 0.722$.

$$\text{Gas Power} = w_{\text{rotor}}\,\Omega\,\frac{\Sigma U^2}{g_c}\frac{60}{33000} = (6.5)\ 0.722\left(\frac{1200^2}{32.174}\right)\frac{60}{33000} = 381.9 \text{ hp}$$

The shaft seal which is located downstream of the rotor leaks 0.03 lbm/sec for these conditions, so the mass flow rate at the intercooler entry is

$$\text{w/cooler entry} = w_{\text{rotor}} - w_{\text{leak}} = 6.50 - 0.03 = 6.47 \text{ lbm/sec}$$

The intercooler is known to cool the flow to 560°R at the mass flow rate, gas entry state, and specified operating condition coolant temperature and flow rate. The air stream experiences a total pressure loss of 0.8 psi across the intercooler. It must now be determined if and how much

Copyright ASME International
Provided by IHS under license with ASME
No reproduction or networking permitted without license from IHS
Not for Resale

condensation occurs in the cooler. Since the cooler exit velocity is assumed, very low stagnation values are used in the analysis. The saturation pressure of the vapor at 560°R is approximately 0.949 psia. If the exit air is at 100 percent relative humidity, the humidity ratio is

$$HR_d = \frac{R_{da}}{R_w}\frac{p_{sv}}{p - p_{sv}}\frac{53.34}{85.76}\left(\frac{0.949}{31.04 - 0.949}\right) = 0.0196\ \frac{\text{lbm • water}}{\text{lbm • } da}$$

where $p = 31.84 - 0.8 = 31.04$ psia

Since the saturated humidity ratio is less than the cooler entry humidity ratio, condensation must occur. The difference between the two is the ratio of condensate to dry air

$$\text{Condensate}/w_{da} = HR_i - HR_d = 0.0250 - 0.0196 = 0.0054\ \text{lbm • } w/\text{lbm • } da$$

The mass flow rate of dry air is given by

$$w_{da} = w/(1 + HR_i) = 6.47/(1.025) = 6.312\ \text{lbm/sec}$$

so, the condensate is

$$\text{Condensate} = (\text{condensate}/w_{da})\ w_{da} = 0.0054\ (6.312) = \text{lbm/sec}$$

The exit mass flow rate for the air – water vapor mixture is

$$w_{ex} = w_i - \text{condensate} = 6.47 - 0.0341 = 6.436\ \text{lbm/sec}$$

The intercooler exit conditions are the second section inlet conditions.

The previous calculation sequence is repeated for the second section, starting with calculation of the flow coefficient. The gas constant changes slightly due to the water vapor removal.

$$R = (R_{da} + HR\ R_w)/(1 + HR) = [53.34 + 0.0196\ (85.76)]/1.0196$$

$$= 53.96\ \text{ft-lbf/lbm °R}$$

And the flow coefficient is

$$\phi = \frac{\frac{w_i R T_i}{144 p_i}}{\left(\frac{2\pi}{60} N\right)\left(\frac{D}{12}\right)^3}$$

$$= \frac{\frac{6.436\ (53.96)\ (560)}{144\ (31.04)}}{\left(\frac{2\pi}{60}\right) 2000 \left(\frac{12.204}{12}\right)^3} = 0.0197$$

Reading $\eta_p = 0.81$, $\mu_p = 0.560$, and $\Omega_i = 0.691$ from the section 2 dimensionless performance curves (see Fig. C.7.1) for $\phi = 0.0197$, and using

Copyright ASME International
Provided by IHS under license with ASME
No reproduction or networking permitted without license from IHS
Not for Resale

$$c_p = \left(\frac{k}{k-1}\right)\frac{R}{J} = \frac{1.395}{0.395}\frac{53.96}{J} = 0.2449\ \frac{\text{Btu}}{\text{lbm} \bullet {}^\circ\text{R}}$$

yields

$$\eta_p \frac{k}{k-1} = \frac{n}{n-1} = 0.81\ \frac{1.395}{0.395}$$

yielding

$$\frac{n}{n-1} = 2.861, \text{ and } n = 1.537$$

$$r_p = \left[1 + \frac{\mu_p \dfrac{\Sigma U^2}{g_c}}{\left(\dfrac{n}{n-1}\right) RT_i}\right]^{\frac{n}{n-1}}$$

$$= \left[1 + \frac{0.56\ \dfrac{1065^2}{g_c}}{(2.861)\ 53.96\ (560)}\right]^{2.861} = 1.801$$

$$p_d = (r_p)\ (p_i) = (1.801)\ (31.04) = 55.91 \text{ psia}$$

$$r_t = r_p^{\left(\frac{n-1}{n}\right)} = 1.801^{\frac{1}{2.861}} = 1.228$$

$$T_d = (r_t)\ (T_i) = (1.228)\ (560) = 687.9\ {}^\circ\text{R}$$

$$\text{Gas Power} = \frac{w_{\text{rotor}}\ \Omega\ \dfrac{\Sigma U^2}{g_c}\ 60}{3300}$$

$$= \frac{6.436\ (0.691)\left(\dfrac{1065^2}{32.174}\right) 60}{33000} = 285.1 \text{ hp}$$

The shaft seal downstream of the rotor leaks 0.06 lbm/sec for these conditions, so the mass flow rate at the aftercooler entry is

$$w_{\text{cooler entry}} = 6.436 - 0.06 = 6.376 \text{ lbm/sec}$$

The aftercooler is known to cool the flow to 580°R at this mass flow rate, gas state, and specified operating condition coolant temperature and flow rate. The aftercooler pressure drop is 1 psi. Assuming a saturation pressure of 1.692 psia and following the intercooler condensation analysis scheme,

Copyright ASME International
Provided by IHS under license with ASME
No reproduction or networking permitted without license from IHS
Not for Resale

$$HR = \frac{R_{da}}{R_w}\left(\frac{p_{sv}}{p - p_{sv}}\right) = \frac{53.34}{85.76}\left(\frac{1.692}{54.91 - 1.692}\right) = 0.0198\ \frac{\text{lbm} \cdot w}{\text{lbm} \cdot da}$$

where $p = 55.91 - 1 = 54.91$ psia.

Since the saturated humidity ratio is greater than the entry humidity ratio, no condensation occurs in the aftercooler.

In summary, the final discharge pressure at the aftercooler exit is 54.91 psia, the final discharge temperature at the aftercooler exit is 580°R, and the total gas power requirement of the two sections is 667 hp.

Copyright ASME International
Provided by IHS under license with ASME
No reproduction or networking permitted without license from IHS
Not for Resale

TABLE C.7.1
SUMMARY OF RESULTS

Specified Conditions:		
Inlet mass flow rate	6.500	lbm/sec
Inlet total pressure	14.7	psia
Inlet total temperature	560.	°R
Inlet relative humidity	60.	%
Gas constant, dry air	53.34	ft-lbf/lbm-°R
Gas constant, water vapor	85.76	ft-lbf/lbm-°R
1st Section:		
Rotational speed	20000	rpm
Tip diameter	13.751	in.
2nd Section:		
Rotational speed	20000	rpm
Tip diameter	12.204	in.

Intermediate Calculation Results:

	1st Section	2nd Section	
Gas constant for mixture	54.13	53.96	ft-lbf/lbm-°R
Specific heat for mixture	0.2457	0.2449	Btu/lbm-°R
Flow coefficient	0.0295	0.0197	—
Polytropic efficiency	0.83	0.81	—
Polytropic work coefficient	0.599	0.56	—
Work input coefficient	0.722	0.691	—
Total work input coefficient	0.722	0.691	—
Polytropic exponent	1.5178	1.537	—
Tip speed	1200	1065	ft/sec
Inlet pressure	14.7	31.04	psia
Pressure ratio	2.166	1.801	—
Discharge pressure	31.84	55.91	psia
Inlet temperature	560.	560.	°R
Discharge temperature	729.	687.9	°R
Gas power	381.9	285.1	horsepower
Inlet mass flow rate	6.5	6.436	lbm/sec
Leakage flow rate	0.03	0.06	lbm/sec
Discharge flow rate	6.47	6.376	lbm/sec
Cooler condensate flow	0.0341	0.	lbm/sec
Cooler pressure drop	0.8	1.0	psia

Overall results:

Final discharge pressure	54.9	psia
Final discharge temperature	580.	°R
Total gas power	667	horsepower
Delivered mass flow rate	6.38	lbm/sec

Copyright ASME International
Provided by IHS under license with ASME
No reproduction or networking permitted without license from IHS
Not for Resale

SAMPLE CALCULATION C.8
APPLICATION OF UNCERTAINTY ANALYSIS

This sample problem highlights some of the features of uncertainty analysis as they apply to a PTC 10 test. The propagation of measurement error to final results is emphasized.

This particular case has been selected because of the relative simplicity of the equations involved. There is no intention to imply that it covers all uncertainties of interest. Nor is it intended to imply achievable or expected accuracy in general. It simply demonstrates the method.

Suppose that test results which meet Code requirements are available. It is desired to determine the uncertainty in shaft power for a given specified operating condition flow rate. Assume that the shaft power measurement method was used during the test.

Uncertainty analysis is done following PTC 19.1, using the step-by-step calculation procedure given in that document. The steps, excluding final report, are:

(1) Define the measurement process.
(2) List the elemental error sources.
(3) Estimate elemental errors.
(4) Calculate the bias and precision errors for each parameter.
(5) Propagate the bias and precision errors.
(6) Calculate uncertainty.

Step 1 — Definition of the measurement process requires expression of the functional relationship involved. From Table 5.4 we obtain

$$P_{sh_{sp}} = \frac{\Sigma_{\text{sections}}\, w_{\text{rotor}_{sp}}\, \Omega_{sp} \left[\dfrac{\Sigma U^2}{g_c}\right]_{sp} + P_{\text{parasitic}_{sp}}}{33000}$$

Assuming a single section and no leakage or sidestreams

$$w_{\text{rotor}} = w$$

and,

$$P_{sh_{sp}} = \frac{w_{sp}\, \Omega_{sh_{sp}} \left[\dfrac{\Sigma U^2}{g_c}\right]_{sp} + P_{\text{parasitic}_{sp}}}{33000}$$

Since the shaft power is being evaluated for a given flow and speed,

w_{sp} and $\left(\dfrac{\Sigma U^2}{g_c}\right)_{sp}$ are treated as knowns having no error.

Copyright ASME International
Provided by IHS under license with ASME
No reproduction or networking permitted without license from IHS
Not for Resale

The terms $\Omega_{sh_{sp}}$ and $P_{\text{parasitic}_{sp}}$ are related to test conditions, from Table 5.3, as

$$\Omega_{sh_{sp}} = \Omega_{sh_t} = \left[\frac{(p_{sh} - P_{\text{parasitic}})\ 33000}{w\dfrac{\Sigma U^2}{g_c}}\right]_t$$

Assuming that Q_m is the only parasitic loss,

$$\Omega_{sh_{sp}} = \Omega_{sh_t} = \left[\frac{(3300\ P_{sh} - J\ Q_m)}{w\dfrac{\Sigma U^2}{g_c}}\right]_t$$

and

$$P_{sh_p} = w\left(\frac{\Sigma U^2}{g_c}\right)_{sp}\left[\frac{P_{sh} - \dfrac{J\ Q_m}{33000}}{w\dfrac{\Sigma U^2}{g_c}}\right]_t + \frac{J\ Q_{m_t}}{33000}\left(\frac{U_{sp}}{U_t}\right)^{\beta}$$

where

$$P_{\text{parasitic}_{sp}} = \frac{J\ Q_{m_{sp}}}{33000} = \frac{J\ Q_{m_t}}{33000}\left(\frac{U_{sp}}{U_t}\right)^{\beta} \text{ para. 5.7.4.}$$

In general the procedure would now be to break down the individual variables in this equation in terms of independent measurements. For example, if the shaft power were determined from a torque meter, that power would be expressed as the product of measured torque and measured speed. Similarly, the rotor mass rate of flow might be expressed in terms of nozzle pressure drop, pressure, temperature, and gas composition. For brevity, in this example P_{sht}, Q_{m_t}, U_t, and w_t are treated as individually measured elemental quantities.

Steps 2 thru 4 — Assume that the elemental error sources have been listed, the elemental errors estimated, and the corresponding bias and precision errors calculated. Many examples of this procedure may be found in PTC 19.1.

This process depends upon the actual instrumentation system and data collection techniques used. The results may be expressed as follows. The bias limits and precision indices represent the combined effects of the independent measurements for each parameter.

Parameter	Absolute Bias Limit	Absolute Precision Index of the Mean[Note 1]
w_t	$B_{w_t} = 0.01\ w_t$	$S_{w_t} = 0.01\ w_t$
S_{sh_t}	$B_{P_{sh_t}} = 0.01\ P_{sh_t}$	$S_{P_{sh_t}} = 0.01\ P_{sh_t}$
Q_{m_t}	$BQ_{m_t} = 0.01\ Q_{m_t}$	$SQ_{m_t} = 0.01\ Q_{m_t}$
U_t	$BU_t = 0.01\ U_t$	$SU_t = 0.01\ U_t$
β	$B_\beta = 0.2\ \beta$	

[Note 1] S, only in this section, is the Absolute Precision Index of the mean $= S/\sqrt{N}$.

In every case a one percent value has been assigned to each bias limit and precision index for the measured quantities. This of course does not reflect what might be expected in reality. These values have been chosen to demonstrate the effect of unit variations.

Step 5 — The individual errors are propagated into the result according to a Taylor series expansion. To do so it is necessary to determine sensitivity coefficients, the precision index of the result, and bias limit of the result.

Copyright ASME International
Provided by IHS under license with ASME
No reproduction or networking permitted without license from IHS
Not for Resale

The sensitivity coefficients ϕ_i are determined by partial differentiation, i.e.,

$$\text{if } r = f(P_1, P_2, P_3, \ell P_i), \text{ then } \phi P_i = \partial r/\partial P_i$$

So,

$$\phi P_{sh_t} = \frac{\partial}{\partial P_{sh_t}} P_{sh_{sp}} = \frac{W_{sp}}{W_t}\left[\frac{U_{sp}}{U_t}\right]^2$$

$$\phi Q_{m_t} = \frac{\partial}{\partial Q_{m_t}} P_{sh_{sp}} = \frac{\left[-\frac{W_{sp}}{W_t}\left(\frac{U_{sp}}{U_t}\right)^2 + \left(\frac{U_{sp}}{U_t}\right)^{\beta}\right] J}{33000}$$

$$\phi w_t = \frac{\partial}{\partial w_t} P_{sh_{sp}} = -\frac{w_{sp}}{w_t}\left(\frac{W_{sp}}{U_t}\right)^2 \left[\frac{P_{sh} - \frac{Q_m J}{33000}}{w}\right]_t$$

$$\phi U_t = \frac{\partial}{\partial U_t} P_{sh_{sp}} = -2\,\frac{W_{sp}}{w_t}\left(\frac{U_{sp}}{U_t}\right)^2 \left[\frac{P_{sh} - \frac{Q_m J}{33000}}{U}\right]_t - \beta\left[\frac{\frac{Q_m J}{33000}}{U_t}\right]_t \left(\frac{U_{sp}}{U_t}\right)^{\beta}$$

$$\phi_\beta = \frac{\partial}{\partial \beta} P_{sh_{sp}} = \left[\frac{Q_m J}{33000}\right]_t \left(\frac{U_{sp}}{U_t}\right)^{\beta} \ln \frac{U_{sp}}{U_t}$$

A bias error is assumed in the mechanical loss conversion equation due to an assumed unknown error in the exponent β. It is estimated for this example as 0.2β.

The precision index for the result is the square root of the sum of the squares of the product of sensitivity coefficients and average independent parameter precision indices. Thus

$$S_{P_{sh_p}} = \sqrt{(\phi_{w_t} S_{w_t})^2 + (\phi_{P_{sh_t}} S_{P_{sh_t}})^2 + (\phi_{Q_{m_t}} S_{Q_{m_t}})^2 + (\phi_{U_t} S_{U_t})^2}$$

The bias limit for the result is the square root of the sum of the squares of the product of the sensitivity coefficients and average independent parameter bias limits. Thus

$$B_{P_{sh_p}} = \sqrt{(\phi_{w_t} B_{w_t})^2 + (\phi_{P_{sh_t}} B_{P_{sh_t}})^2 + (\phi_{Q_{m_t}} B_{Q_{m_t}})^2 + (\phi_{U_t} B_{U_t})^2 + (\phi_\beta B_\beta)^2}$$

Step 6 — Calculate uncertainty

Copyright ASME International
Provided by IHS under license with ASME
No reproduction or networking permitted without license from IHS
Not for Resale

Uncertainty may be calculated according, by choice, to two models. The models combine the precision index and bias limits of the result differently.

$$U_{ADD_{P_{sh_{sp}}}} = B_{P_{sh_{sp}}} + t_{95} S_{P_{sh_{sp}}}$$

$$U_{RSS_{P_{sh_{sp}}}} = \sqrt{B_{P_{sh_{sp}}}{}^2 + (t_{95} S_{P_{sh_{sp}}})^2}$$

The value t is called the Student's t. It is assigned depending upon the degrees of freedom of the sample, which is usually one less than the number of points averaged. See PTC 19.1 for further explanation. Assuming a large sample, $t = 2$ may be used.

Results

In order to allow expression of the results of this example numerically, assume

$$\left[\frac{\frac{Q_m J}{33000}}{P_{sh}}\right]_t = 0.10, \frac{U_{sp}}{U_t} = 1.05, \frac{w_{sp}}{w_t} = 1.20, \text{ and } \beta = 2.5$$

The sensitivity factors are

$$\phi_{P_{sh_t}} = 1.20\ (1.05)^2 = 1.323$$

$$\phi_{Q_{M_t}} = \frac{[-1.20\ (1.05)^2 + (1.05)^{2.5}]\ J}{33000} = -0.00456$$

$$\phi_{w_t} = -1.20\ (1.05)^2\ (1 - 0.1) \left(\frac{P_{sh}}{w}\right)_t = -1.1907 \left(\frac{P_{sh}}{w}\right)_t$$

$$\phi_{U_t} = -2\ (1.20)\ (1.05)^2\ (1 - 0.1) \left(\frac{P_{sh}}{U}\right)_t - 2.5\ (0.1)\ (1.05)^{2.5} \left(\frac{P_{sh}}{U}\right)_t$$

$$= -2.6638 \left(\frac{P_{sh}}{U}\right)_t$$

$$\phi_\beta = 0.1\ (1.05)^{2.5}\ \ln\ (1.05)\ P_{sh_t} = 0.005512\ P_{sh_t}$$

Copyright ASME International
Provided by IHS under license with ASME
No reproduction or networking permitted without license from IHS
Not for Resale

The precision index of the result is

$$S_{P_{sh_{sp}}} = \sqrt{(\phi_{w_t} S_{w_t})^2 + (\phi_{P_{sh_t}} S_{P_{sh_t}})^2 + (\phi_{Q_{m_t}} S_{Q_{m_t}})^2 + (\phi_{U_t} S_{U_t})^2} = \left\{\left(-1.191 \frac{P_{sh_t}}{w_t} 0.01\ w_t\right)^2 + [1.323\ (0.01)\ P_{sh_t}]^2 + [-0.1933\ (0.01)\ 0.1\ P_{sh_t}]^2 + \left[-2.664 \frac{P_{sh_t}}{U_t} 0.01\ U_t\right]^2\right\}^{\frac{1}{2}}$$

$$= \sqrt{1.418 \times 10^{-4} + 1.75 \times 10^{-4} + 3.74 \times 10^{-8} + 7.10 \times 10^{-4}} = 0.0320\ P_{sh_t} \ldots \text{(a)}$$

The bias limit of the result is

$$B_{P_{sh_{sp}}} = \sqrt{(\phi_{w_t} B_{w_t})^2 + (\phi_{P_{sh_t}} B_{P_{sh_t}})^2 + (\phi_{Q_{m_t}} B_{Q_{m_t}})^2 + (\phi_{U_t} B_{U_t})^2 + (\phi_\beta B_\beta)^2}$$

$$= \sqrt{1.418 \times 10^{-4} + 1.75 \times 10^{-4} + 3.74 \times 10^{-8} + 7.10 \times 10^{-4} + 1.20 \times 10^{-6}} = 0.0325\ P_{sh_t} \ldots \text{(b)}$$

The uncertainties are

$$U_{ADD} = 0.0325 + 2\ (0.0320) = 0.097\ P_{sh_t}$$

$$U_{RSS} = \sqrt{0.0325^2 + [2\ (0.0320)]^2} = 0.072\ P_{sh_t}$$

Discussion

The U_{ADD} and U_{RSS} uncertainties may be interpreted as follows. For $U_{ADD} = 0.097\ P_{sh_t}$, the measurement $P_{sh_t} \pm 0.097\ P_{sh_t}$ will be expected to contain the true value 99 percent of the time. Similarly, for $U_{RSS} = 0.072\ P_{sh_t}$, the measured $P_{sh_t} \pm 0.072\ P_{sh_t}$ will be expected to contain the true value within 99 percent of the time.

It is reasonable to assume that the uncertainty for this example is so large as to mask the objective of the test (recall that the numerical values for the independent measurement bias limits and precision indices were selected at 1 percent simply to demonstrate unit variations). It is a very simple matter to review the calculations to expose the major uncertainty source. Inspection of equations (a) and (b) for the largest terms immediately indicates the speed measurement. Thus, for example, if the bias limit and precision error for speed measurement could be reduced to

$$B_{U_t} = 0.001\ U_t, \text{ and } S_{U_t} = 0.001\ U_t$$

the uncertainties become

$$U_{ADD} = 0.054\ P_{sh_t}, \text{ and } U_{RSS} = 0.031\ P_{sh_t}$$

It is clear that such analysis is of great value in both planning a test and evaluating test results.

Copyright ASME International
Provided by IHS under license with ASME
No reproduction or networking permitted without license from IHS
Not for Resale

APPENDIX D
REFERENCES

(This Appendix is not a part of ASME PTC 10-1997.)

(D.1) Maretti, A., M. Giovannini, and P. Nava. "Shop Full Load Testing of Centrifugal Compressors." December 1982 proceedings of the 11th Turbomachinery Symposium, Texas A& M.

(D.2) F. J. Wiesner. "A New Appraisal of Reynolds Number Effects on Centrifugal Compressor Performance." Transactions of the ASME, pp. 384–395, Vol. 101, July 1979, *Journal of Engineering for Power.*

(D.3) Huber, M. L., and M. O. McLinden. "Thermodynamic Properties of R134a (1,1,1,2-Tetrafluoroethane)." July 14–17, 1992 proceedings, International Refrigeration Conference, Purdue University, West Lafayette, IN.

(D.4) Simon, H., and A. Bulskamper. On the Evaluation of Reynolds Number and Related Surface Roughness Effects on Centrifugal Compressor Performance Based on Systematic Experimental Investigations. ASME paper no. 83 GT-118: Transactions of the *Journal of Engineering for Power,* presented March 27, 1983.

(D.5) Nathoo, N. S., and W. G. Gottenberg. "Measuring the Thermal Dynamic Performance of Multi-Stage Compressors Operating on Mixed Hydrocarbon Gases." December 1981 proceedings of the 10th Turbomachinery Symposium, Texas A and M.

(D.6) Herd, T. C., and E. J. Hipp. "Accuracy Expectations for Gas Turbine and Centrifugal Compressor Performance Testing." Paper ASME 83-GT-128.

(D.7) Carter, A. D. S., C. E. Moss, G. R. Green, and G. G. Annear. "The Effects on Reynolds Number on the Performance of a Single Stage Compressor." Aeronautical Research Council Reports and Memorandum, 1960; memorandum 3184, May 1957, U.K.

(D.8) Samurin, N. A., and M. A. Strite. "Equivalent Performance Testing of Multi-Section Compressors." ASME 81-GT-150, March 9, 1981.

(D.9) Daugherty, R. L., and J. B. Franzini. "*Fluids Mechanics with Engineering Application.*" McGraw Hill Book Co.; 1977.

(D.10) Lee, J. F., and F. W. Sears. "*Thermodynamics.*" Addison Wesley Publication Co.; 2nd edition, 1963.

(D.11) A. H. Shapiro. "*Compressible Fluid Flow.*" The Weld Press Co., 1953.

(D.12) J. E. Lay. "*Thermodynamics.*" Charles E. Merrill Books, Inc., 2nd printing, 1964.

(D.13) J. M. Schultz. "The Polytropic Analysis of Centrifugal Compressors." Transactions of the ASME, Series A. Vol. 84, *Journal of Engineering for Power.* January 1962, p. 69–82 and April 1962, p. 22.

(D.14) M. V. Casey. "The Effects of Reynolds Number on the Efficiency of Centrifugal Compressor Stages." Transaction of the ASME, April 1985, Vol. 107, p. 541–548. *Journal of Engineering for Gas Turbine and Power.*

(D.15) A. Schaffler. "Experimental and Analytical Investigation of the Effects of Reynolds Number and Blade Surface Roughness on Multistage Axial Flow Compressors." Transactions of the ASME, January 1980, Vol. 102, p. 5–13, *Journal of Engineering for Power.*

(D.16) R. A. Strub. "Influence of the Reynolds Number on the Performance of Centrifugal Compressors." Final Report of the Working Group of the Process Compressor Subcommittee of the International Compressed Air and Allied Machinery Committee (ICAAMC) Zurich, October 1982.

Copyright ASME International
Provided by IHS under license with ASME
No reproduction or networking permitted without license from IHS
Not for Resale

(D.17) Nathoo, W. S., and W. G. Gottenberg. "A New Look at Performance Analysis of Centrifugal Compressors Operating with Mixed Hydrocarbon Gases." Transactions of the ASME, October 1983, Vol. 105, p. 920–926, *Journal of Engineering for Power.*

(D.18) Skoch, Gary J., and Royce D. Moore. *NASA Technical Memorandum 1001/5 AJAA-87-1745.* AVSCOM Technical Report 87-C-21 "Performance of two 10 lb/sec centrifugal compressors with different blade and shroud thickness operating over a range of Reynolds Numbers." 23rd Joint Propulsion Conference cosponsored by the AIAA, SAE, ASME and ASEE, San Diego, CA, June 29–July 2, 1987.

(D.19) Moore, M. J., and H. S. Shapiro. *Fundamentals of Engineering Thermodynamics.* John Wiley & Sons, Inc., 1988.

(D.20) F. Kreith. *Principles of Heat Transfer.* Intext Educational Publishers, 3rd edition, 1973.

Copyright ASME International
Provided by IHS under license with ASME
No reproduction or networking permitted without license from IHS
Not for Resale

APPENDIX E
RATIONALE FOR CALCULATION METHODS

(This Appendix is not a part of ASME PTC 10-1997.)

E.1 PURPOSE

The purpose of this Appendix is to describe the Code problem model, background theory, and simplifying assumptions.

E.2 PROBLEM MODEL

The ultimate aim of a Code test is to determine compressor performance for a given set of conditions. That is, to determine relationships of the form

Dependent parameter = F (many independent parameters)

Examples of dependent parameters are discharge pressure, head, efficiency, etc. Among the independent parameters are geometry, speed, flow rate, inlet gas state, gas properties, etc. The functional relationship f is unknown. It is to be determined by the test.

The many independent parameters represent the specified operating conditions. Practical test situations are often such that one or more of these parameters is precluded from taking on the desired specified operating condition value. Means must then be sought to determine the effects of the departures. One method is to employ dimensional analysis.

E.2.1 Dimensional Analysis. The theory of dimensional analysis and similarity are discussed in PTC 19.23, Guidance Manual for Model Testing, and many fluid dynamics textbooks. In essence it provides a means to reduce the number of parameters in a problem which is expressed in dimensional terms. This is done by appropriate grouping of dimensional terms in dimensionless groups.

E.2.2 Basic Model. Consideration of a simple mathematical model of compressor performance illustrates the general features of dimensional analysis as they are applied in this Code. A simple conventional set of dimensionless parameters often applied is given by

$\eta_p = F_1$ (ϕ, Mm, Rem, gas properties expressed in dimensionless terms)
$\mu_p = F_2$ (ϕ, Mm, Rem, gas properties expressed in dimensionless terms)
$\mu_{in} = F_2/F_1$

The dimensionless parameters are defined in terms of dimensional variables,

$$\eta_p = \frac{\frac{n}{n-1} f 144\, p_i V_i \left(\frac{p_d}{p_i}\right)^{\frac{n-1}{n}} - 1}{h_d - h_i}$$

Copyright ASME International
Provided by IHS under license with ASME
No reproduction or networking permitted without license from IHS
Not for Resale

with,

$$n = \frac{\ln \frac{p_d}{p_i}}{\ln \frac{v_i}{v_d}}$$

$$\phi = \frac{w}{\rho\, 2\, \pi\, N \left(\frac{D}{12}\right)^3}$$

Rem = UL/ν
$Mm = U/a$
gas properties . . . according to gas types
$k = c_p/c_v$
$Z = pv/RT$

It is presumed in performing a dimensional analysis that all of the variables affecting the thermodynamic and fluid dynamic performance of the compressor have been included. If so, different sets of dimensional variables which combine to form identical sets of independent dimensionless groups (ϕ, Mm, Rem, gas properties) will have associated with them identical values for η, μ_p, and μ_i.

This basic model is generally accepted to adequately describe the main features of compressor performance. It has the immediate advantage of reducing the number of parameters which must be considered in developing a test. But of at least equal importance it provides a means of accounting for unavoidable departures from desired specified operating conditions. For example, it may be used to establish an appropriate test speed to compensate for the effect of a test inlet temperature which differs from the specified operating condition temperature.

E.2.3 Allowable Departures. It often remains impractical to satisfy all the independent dimensionless parameter requirements. This situation may be addressed by allowing controlled departures in certain independent dimensionless groups. The assumption is that the limits placed upon these departures render the effects upon the dependent parameters either negligible or predictable. The following approach is taken in this Code.

E.2.3.1 Mach Number. Mach number departures are assumed to be of increasing relative importance as the Machine Mach number increases. This is reflected in the allowable departures shown in Table 3.2 or Figs. 3.2 and 3.3. It is assumed that negligible effect is associated with departure within these limits.

E.2.3.2 Gas Properties. Allowable departures from the ideal gas laws for both the test and the specified gases are given in Table 3.3. When these limits are exceeded the gas must be treated as real.

E.2.3.3 Reynolds Number. The allowable departures in Machine Reynolds number are given in Table 3.2 and Fig. 3.4.

E.2.3.4 Specific Volume Ratio. The preceding allowable independent dimensionless group departures may combine to alter the specific volume ratio between the compressor inlet and discharge. As a result an additional restriction is placed upon the volume ratio, r_v, as shown in Table 3.2. The effects due to volume ratio departure are assumed to be negligible when these limits are observed.

Copyright ASME International
Provided by IHS under license with ASME
No reproduction or networking permitted without license from IHS
Not for Resale

E.2.4 Secondary Flow Streams. The basic compressor performance model assumes single entry and exit flow streams. In actual practice secondary flow streams may enter or leave a compressor section. Examples are sidestreams and leakages. These secondary streams give rise to a number of additional dimensionless groups. Each additional entry flow stream has associated with it a flow rate and gas state, or three additional independent variables. If we use volume flow rate, enthalpy, and density to define the streams we may form three additional independent dimensionless groups by referencing mainstream values,

$\pi_1 = (q/q_x)m$
$\pi_2 = (h/h_x)m$
$\pi_3 = (\rho/\rho_x)m$

where x denotes the sidestream value, and m denotes the reference mainstream value.

The approach taken in this Code is to require that the ratio of sidestream to reference flow rates remain within the limits of Table 3.5 or leakages per para. 3.3.6. When these limits are observed it is assumed that the effects upon the dependent dimensionless groups are negligible. No specific restriction is placed upon the density or enthalpy ratios. It is assumed that departures in these ratios will produce negligible effects upon the dependent dimensionless groups. Where thorough mixing of inlet streams before the compression is doubtful, this assumption may not be valid. In such cases the parties to the test may elect by mutual agreement to further restrict these ratios as well.

Departures in these secondary dimensionless groups do affect results in the dimensional sense. This is accounted for in the calculation procedure.

E.2.5 Code Model Summary. The Code performance model may be summarized as follows:

$$\eta_{p_{sp}} = \eta_{p_t}\,\mathrm{Rem}_{corr} = F_1\left(\phi, \frac{q_x}{q_m}, M_m, r_v, \text{dimensionles gas properties}\right)_t \mathrm{Rem}_{corr}$$

$$\mu_{p_{sp}} = \mu_{p_t}\,\mathrm{Rem}_{corr} = F_2\left(\phi, \frac{q_x}{q_m}, M_m, r_v, \text{dimensionles gas properties}\right)_t \mathrm{Rem}_{corr}$$

$$\mu_{p_{sp}} = \frac{\mu_{p_{sp}}}{\eta_{p_{sp}}}$$

$$\Omega_{sp} = F_3\left(\phi, \frac{q_s}{q_m}, M_m, r_v, \text{dimensionles gas properties}\right)_t \mathrm{Rem}_{corr}$$

For a given flow coefficient ϕ, certain departures are allowed in the remaining independent dimensionless groups. The volume ratio restriction serves to limit the effects of the combined departures in the other dimensionless groups. The first three dependent groups have the same form as those in preceding issues of this Code. The fourth, Ω_{sp}, is new to this issue as an explicit parameter. It is a power coefficient which takes on different forms for energy balance and shaft power methods. It is related to the other dependent parameters, but is useful explicitly in a bookkeeping sense for complicated arrangements.

Copyright ASME International
Provided by IHS under license with ASME
No reproduction or networking permitted without license from IHS
Not for Resale

E.3 CODE DIMENSIONLESS PARAMETERS

Appropriate units and dimensional constants are required for the system of units elected for computations.

E.3.1 Inlet and Exit Conditions. The structure of the problem model is such that it is necessary to carefully define the inlet and exit conditions which are used in calculating the dimensionless groups. The exit conditions are the stagnation condition at the discharge measurement station. The inlet condition is the stagnation state assigned to the flow stream entering the impeller, and is denoted by the subscript i on thermodynamic properties.

For a simple single inlet flow stream this is the stagnation state at the inlet flange. For multiple inlet streams it is the stagnation state computed from the mixing of the individually determined streams. A standard calculation scheme is given in subpara. E.5.

E.3.2 Flow Coefficient. The flow coefficient is defined as

$$\phi = \frac{w_{rotor}}{\rho_i \, 2 \, \pi \, N \left(\frac{D}{12}\right)^3}$$

where

w_{rotor} = mass flow rate entering rotor (mass flow rate compressed)

ρ_i = inlet total density

N = rotor rotational speed

D is the blade tip diameter of the 1st impeller for centrifugal compressors

D is the diameter at the leading edge of the 1st stage rotor blade for axial compressors.

The mass flow rate entering the rotor is determined giving due consideration to all section inlet and outlet flow streams and leakages.

E.3.3 Gas Properties. The physical properties of the gas are expressed in dimensionless form as the isentropic exponents, compressibility factors, and compressibility functions.

E.3.4 Specific Volume Ratio. The specific volume ratio is the ratio of inlet to exit total specific volumes. The inlet specific volume is that assigned to the flow entering the rotor. The exit specific volume is that computed for exit total conditions

$$r_v = \frac{v_i}{v_d}$$

where

$$v_i = \left(\frac{Z \, R \, T}{144 \, p}\right)_i$$

$$v_d = \left(\frac{Z \, R \, T}{144 \, p}\right)_d$$

E.3.5 Ratio of Flow Rates. The ratio of flow rates is the ratio of flow rates at two points in the flow. It is given by

Copyright ASME International
Provided by IHS under license with ASME
No reproduction or networking permitted without license from IHS
Not for Resale

$$r_q = \frac{q_x}{q_y} = \frac{\left(\frac{W}{\rho}\right)_x}{\left(\frac{W}{\rho}\right)_y}$$

where

w = local mass flow rate

ρ = local total density

and x and y denote different points in the section.

The flow rates so defined have the units of volume flow rate, but do not represent actual volume rates of flow since they are defined in terms of total densities. It is assumed that there is a constant relationship between these flow rates and actual volume flow rates between test and specified operating conditions. This is true when the test and specified operating condition local Fluid Mach numbers are equal, and the deviations are assumed negligible when the Code Machine Mach number departure limits are observed.

E.3.6 Machine Mach Number. The Machine Mach number is given by

$$Mm = U/a$$

where

U = first stage impeller blade or rotor blade tip velocity

a = acoustic velocity at the inlet total conditions

For ideal gases

$$a = \sqrt{(kRT)\, g_c}$$

For real gases

$$a = \sqrt{(\gamma\, 144\, p\, v)\, g_c} \text{ or, } \sqrt{\frac{k\, Z\, R\, T\, g_c}{Y}}$$

The Machine Mach number so defined is not an actual Fluid Mach number. It is nearly directly proportional to actual Fluid Mach numbers when the Code departure limits are observed. The Code departure limits shown in Figs. 3.2 and 3.3 for centrifugal and axial compressors are also given in equation form in Table E.1.

E.3.7 Machine Reynolds Number. The Machine Reynolds number is given by

$$\text{Rem} = Ub/\nu$$

For centrifugal compressors, b is the exit width of the first stage impeller in the section of interest. For axial compressors, b is the chord length at the tip of the first stage rotor blade in the section of interest. The viscosity υ is taken for inlet (stagnation) conditions. The Code departure limits shown in Fig. 3.4 for centrifugal compressors are given in equation form in Table E.2.

E.3.8 Isentropic Work Coefficient. The isentropic work coefficient is given by

$$\mu_s = \frac{\frac{W_s}{\Sigma U^2}}{g_c}$$

Copyright ASME International
Provided by IHS under license with ASME
No reproduction or networking permitted without license from IHS
Not for Resale

TABLE E.1
MACHINE MACH NO. LIMITS

CENTRIFUGAL COMPRESSORS

Specified Mach No.

Range	Lower Limit	Upper Limit
0–0.214	$-Mm_{sp}$	$<(Mm_t - Mm_{sp}) < (-0.25\ Mm_{sp} + 0.286)$
0.215–0.86	$(0.266\ Mm_{sp} - 0.271)$	$<(Mm_t - Mm_{sp}) < (-0.25\ Mm_{sp} + 0.286)$
$0.86 \leq Mm_{sp}$	−0.042	$<(Mm_t - Mm_{sp}) < 0.07$

AXIAL COMPRESSORS

Specified Mach No.

Range	Lower Limit	Upper Limit
0–0.15	$-Mm_{sp}$	$<(Mm_t - Mm_{sp}) < (-0.25\ Mm_{sp} + 0.20)$
0.16–0.6	$(0.266Mm_{sp} - 0.19)$	$<(Mm_t - Mm_{sp}) < (-0.25\ Mm_{sp} + 0.20)$
$0.6 \leq Mm_{sp}$	−0.03	$<(Mm_t - Mm_{sp}) < 0.05$

TABLE E.2
REYNOLDS NUMBER APPLICATION LIMITS FOR CENTRIFUGAL COMPRESSORS[1]

UPPER LIMIT

$Rem_t/Rem_{sp} \leq 1.0$
$x = (Rem_{sp}/10^7)^{0.3}$

Application Range	Equation
$9 \times 10^4 < Rem_{sp} < 1 \times 10^7$	$Rem_t/Rem_{sp} = (100)^x$
$1 \times 10^7 < Rem_{sp}$	$Rem_t/Rem_{sp} = 100$

LOWER LIMIT

$Rem_t/Rem_{sp} < 1.0,$
$x = (Rem_{sp}/10^7)^{0.3}$

Application Range	Equation
$9 \times 10^4 < Rem_{sp} < 1 \times 10^6$	$Rem_t/Rem_{sp} = (0.01)^x$
$1 \times 10^6 < Rem_{sp}$	$Rem_t/Rem_{sp} = 0.1$

NOTE:
(1) See Fig. 3.3.

Copyright ASME International
Provided by IHS under license with ASME
No reproduction or networking permitted without license from IHS
Not for Resale

where

W = isentropic work per unit mass

ΣU^2 = sum of rotor tip speeds

The isentropic work for the purposes of this Code is the work done in an isentropic process between the inlet stagnation state and the discharge stagnation state. The isentropic work per pound mass for an ideal gas is given by

(a)
$$W_s = \frac{k}{k-1} 144\, p_i\, v_i \left[\left(\frac{P_d}{p_i}\right)^{\frac{k1}{k}} - 1\right]$$

For any gas the isentropic work may be calculated from

$$W_s = (h_b' - h_i)$$

The isentropic work for a real gas may also be calculated from the following:

(b)
$$W_s = \frac{n_s}{n_s - 1} f 144\, p_i\, v_i \left[\left(\frac{p_d}{p_i}\right)^{\frac{n_s - 1}{n_s}} - 1\right]$$

Equation (a) differs from equation (b) by substituting n_s for k and introducing f. For a real gas the isentropic volume exponent is not the same as k. On test, n_s can be calculated from

$$n_s = \frac{\ln \frac{p_d}{p_i}}{\ln \frac{v_i}{v_d}}$$

Substituting this n_s for k in equation (a) would produce a small error unless the isentropic exponent were constant and equal to n_s along the compression path. The polytropic work factor f compensates for the difference between n_s and the actual isentropic exponent. It is computed from

$$f = \frac{(h_d' - h_i)\, J}{\frac{n_s}{n_s - 1} 144\, (p_d\, v_d' - p_i\, v_i)}$$

E.3.9 Polytropic Work Coefficient. The polytropic work coefficient is given by

$$\mu_p = \frac{\frac{W_p}{\Sigma U^2}}{g_c}$$

where

W_p = polytropic work per pound mass

$\Sigma U^2/g_c$ = sum of rotor tip speeds squared

The polytropic work for the purposes of this Code is the polytropic work required to compress the gas from the inlet stagnation state to the discharge stagnation state. The gas properties are evaluated at the arithmetic mean between inlet and discharge conditions.

Copyright ASME International
Provided by IHS under license with ASME
No reproduction or networking permitted without license from IHS
Not for Resale

For ideal gases

$$W_p = \frac{n}{n-1} 144\, p_i\, v_i \left[\left(\frac{p_d}{p_i}\right)^{\frac{n-1}{n}} - 1\right]$$

For real gases

$$W_p = \frac{n}{n-1} f 144\, p_i\, v_i \left[\left(\frac{p_d}{p_i}\right)^{\frac{n-1}{n}} - 1\right]$$

where

$$n = \ln(p_d/p_i) \,/\, \ln(v_i/v_d)$$

or

$$n = \frac{1}{Y - m(1 + X)}$$

and

$$m = \frac{Z R}{c_p}\left(\frac{1}{\eta_p} + X\right)$$

It is assumed here that a variation in n affects W_p just as the varying n_s affects W_s. The polytropic work factor f is assumed to have the same value as computed in para. E.3.8.

E.3.10 Efficiencies. Efficiencies are in general defined as the ratio of ideal to actual work required in a given compression process. The standard ideal work chosen for this Code is the work required in a polytropic compression process occurring between the total pressure at the inlet reference stagnation state and the total pressure at the discharge stagnation state. The actual work is taken as the change in total enthalpy between these states. It represents the actual work in the process only in the absence of heat transfer and secondary flow effects. The discharge gas state calculated for specified operating conditions using this efficiency definition therefore assumes the same relative heat transfer and secondary flow effects as those prevailing at test.

The polytropic efficiency is then

$$\eta_p = \frac{W_p}{(h_d - h_i)\, J}$$

and the corresponding isentropic efficiency is

$$\eta_s = \frac{W_s}{(h_d - h_i)\, J}$$

Copyright ASME International
Provided by IHS under license with ASME
No reproduction or networking permitted without license from IHS
Not for Resale

E.3.11 Work Input Coefficient. The work input coefficient is defined in terms of the stagnation enthalpy rise. It is a dimensionless representation of the actual gas work not including the effects of heat transfer and secondary flow. The work input coefficient is given by

$$\mu_{in} = \frac{(h_d - h_i)\, J}{\frac{\Sigma U^2}{g_c}}$$

The ideal work coefficients are related to the foregoing efficiencies through the work input coefficient

$$\mu_{in} = \mu_p/\eta_p = \mu_s/\eta_s$$

E.3.12 Total Work Input Coefficient. Relative differences in heat transfer and leakage or sidestream flow rates often will occur between test and specified operating conditions. It is assumed that these relative differences are sufficiently small so as to produce negligible changes in the polytropic work coefficient and efficiency. The leakage and sidestream flow rate differences, however, can produce relative differences in actual power requirement. The following model is presented to establish a method to account for these effects as they relate to power consumption. The method is based on relating the total work input to rotor mass flow rate.

The problem model and nomenclature are shown in Fig. E.1. The dimensionless total work input coefficient is determined as follows.

The first law of thermodynamics for a control volume surrounding the rotor (in Fig. E.1) is

$$P_{g_{rotor}} = [W_{rotor}\, h_{R_2} - w_{rotor}\, h_{R_1} + Q_{rotor}]\, \frac{J}{33000}$$

The first law of thermodynamics for a control volume surrounding the section (in Fig. E.1) is

$$P_g = [w_d\, h_d + w_{sd}\, h_{sd} + w_{ld}\, h_{ld} + w_{lu}\, h_{lu} - w_i\, h_i - w_{su}\, h_{su} + Q_r]\, J/33000$$

From the conservation of mass

$$w_{rotor} = w_i + w_{su} - w_{lu} = w_d + w_{sd} + w_{ld}$$

The only work done on the gas is that done by the rotor, so

$$P_g = [w_d\, h_d + w_{sd}\, h_{sd} + w_{ld}\, h_{ld} + w_{lu}\, h_{lu} - w_i\, h_i - w_{su}\, h_{su} + Q_r]\, J/33000$$

$$= P_{g_{rotor}} = [W_{rotor}\, h_{R_2} - w_{rotor}\, h_{R_1} + Q_{rotor}]\, \frac{J}{33000}$$

Copyright ASME International
Provided by IHS under license with ASME
No reproduction or networking permitted without license from IHS
Not for Resale

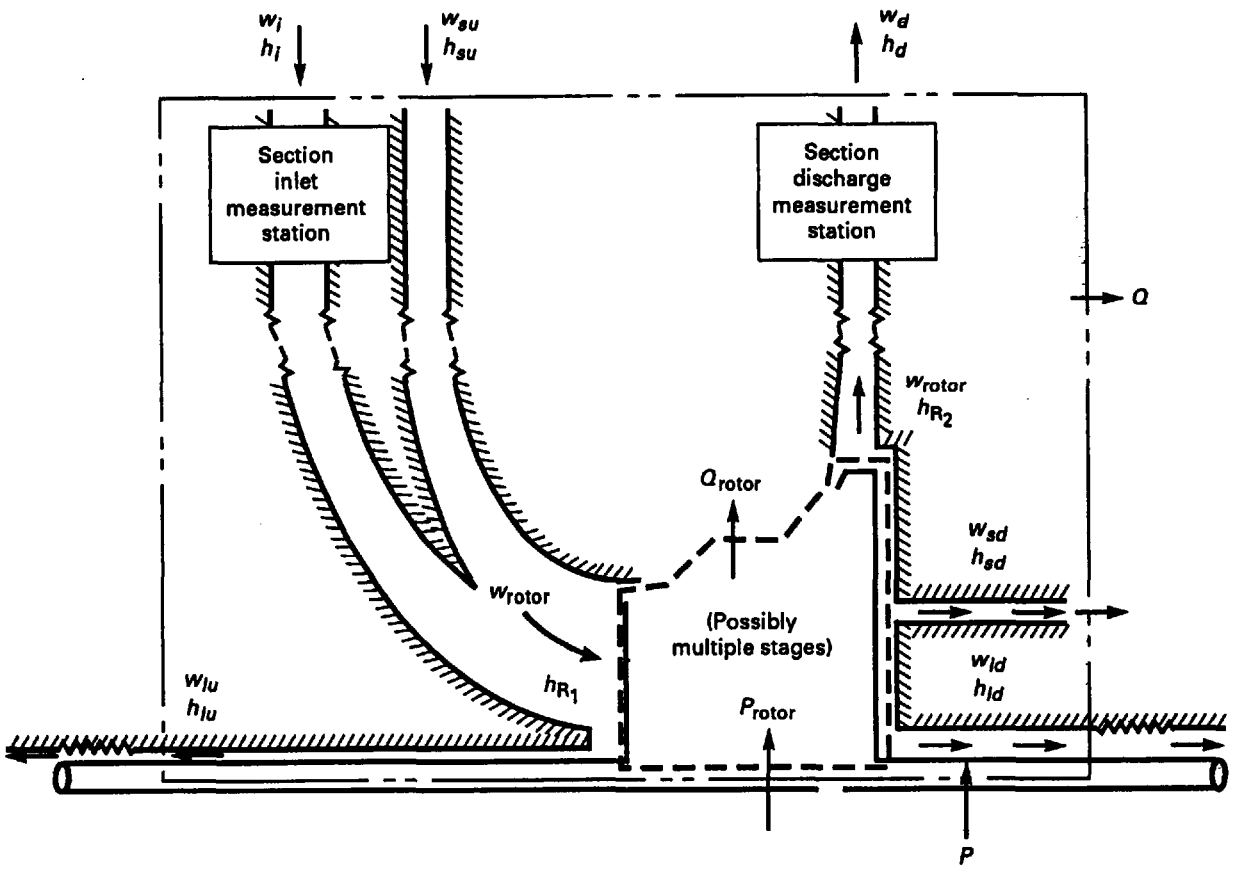

Figure Nomenclature

w_i = mass flow rate at the inlet measurement station.
h_i = enthalpy per unit mass at the inlet measurement station.
w_d = mass flow rate at the discharge measurement station.
h_d = enthalpy per unit mass at the discharge measurement station.
w_{lu} = leakage mass flow rate for gas escaping before the rotor, i.e., upstream of the rotor.
h_{lu} = enthalpy per unit mass for escaping gas. When the gas does not escape, but inlet leakage occurs, h_{lu} is the enthalpy of the gas outside the seal.
w_{ld} = leakage mass flow rate for gas escaping after the rotor, i.e., downstream of the rotor.
h_{ld} = enthalpy per unit mass of the escaping gas. For inward leakage, it is the enthalpy of the gas outside the seal.
w_{su} = mass flow rate for sidestream flow entering after the measurement station but before the rotor.
h_{su} = corresponding enthalpy per unit mass.
w_{sd} = mass flow rate for sidestream flow exiting after the rotor but before the discharge measurement station.
h_{sd} = corresponding enthalpy per unit mass.
Q_{rotor} = net mass flow rate through rotor.
h_{R1} = enthalpy per unit mass at rotor inlet.
h_{R2} = enthalpy per unit mass at rotor exit.
Q_{rotor} = heat loss rate from rotor.
Q = heat loss rate from section.
P = work input rate excluding mechanical loss.

FIG. E.1

Copyright ASME International
Provided by IHS under license with ASME
No reproduction or networking permitted without license from IHS
Not for Resale

Rearranging and non-dimensionalizing with ΣU^2

$$\frac{33000\,P_g}{w_{rotor}\dfrac{\Sigma U^2}{g_c}} = \frac{w_d}{w_{rotor}}\frac{(h_d - h_i)\,J}{\dfrac{\Sigma U^2}{g_c}} + \frac{w_{sd}}{w_{rotor}}\frac{(h_{sd} - h_i)\,J}{\dfrac{\Sigma U^2}{g_c}} + \frac{w_{ld}}{w_{rotor}}\frac{(h_{ld} - h_i)\,J}{\dfrac{\Sigma U^2}{g_c}} + \frac{w_{lu}}{w_{rotor}}\frac{(h_{lu} - h_i)\,J}{\dfrac{\Sigma U^2}{g_c}}$$

$$- \frac{w_{su}}{w_{rotor}}\frac{(h_{su} - h_i)\,J}{\dfrac{\Sigma U^2}{g_c}} + \frac{Q_r\,J}{w_{rotor}\dfrac{\Sigma U^2}{g_c}}$$

$$= \frac{(h_{R_2} - h_{R_1})\,J}{\dfrac{\Sigma U^2}{g_c}} + \frac{Q_{rotor}\,J}{w_{rotor}\dfrac{\Sigma U^2}{g_c}}$$

This equation represents the total work input to the gas in dimensionless form. It is called the total work input coefficient and is given the symbol Ω, i.e.,

$$\Omega = \frac{33000\,P_g}{w_{rotor}\dfrac{\Sigma U^2}{g_c}}$$

This coefficient bears a close relationship to the work input coefficient, μ_{in}, but accounts additionally for the energy lost through heat transfer and secondary flow effects. Like the work input coefficient it is assumed to be invariant between test and specified operating conditions at the same flow coefficient. Its purpose is to aid in properly accounting for heat transfer and secondary flow effects in power calculations.

For heat balance method tests,

$$\Omega = \frac{w_d}{w_{rotor}}\frac{(h_d - h_i)\,J}{\dfrac{\Sigma U^2}{g_c}} + \frac{w_{sd}}{w_{rotor}}\frac{(h_{sd} - h_i)\,J}{\dfrac{\Sigma U^2}{g_c}} + \frac{w_{ld}}{w_{rotor}}\frac{(h_{ld} - h_i)\,J}{\dfrac{\Sigma U^2}{g_c}} + \frac{w_{lu}}{w_{rotor}}\frac{(h_{lu} - h_i)\,J}{\dfrac{\Sigma U^2}{g_c}}$$

$$- \frac{w_{su}}{w_{rotor}}\frac{(h_{su} - h_i)\,J}{\dfrac{U^2}{g_c}} + \frac{Q_r\,J}{w_{rotor}\dfrac{\Sigma U^2}{g_c}}$$

For shaft power method tests,

$$\Omega_{sh} = \left(\frac{P_{sh} - P_{parasitic}}{w_{rotor}\dfrac{\Sigma U^2}{g_c}}\right) 33000$$

where $P_{parasitic}$ represents all power in the shaft power measurement which does not represent work input to the gas in the compressor section of interest, for example, mechanical losses and power input to other sections.

Copyright ASME International
Provided by IHS under license with ASME
No reproduction or networking permitted without license from IHS
Not for Resale

E.4 SPEED SELECTION

The process of structuring the Code performance model includes adding the volume ratio to the independent parameter list to serve as a limiting parameter for the effects of other dimensionless parameter departures.

The volume ratio at test may be controlled at a given flow coefficient and inlet conditions by controlling the compressor speed and flow rate. The appropriate speed may be determined by combining the specific volume ratio requirement

$$r_{v_t} = r_{v_{sp}}$$

or

$$\left[\left(\frac{p_d}{p_i}\right)^{\frac{1}{n}}\right]_t = \left[\left(\frac{p_d}{p_i}\right)^{\frac{1}{n}}\right]_{sp}$$

with the polytropic work coefficient equality

$$\mu_{p_t} \mathrm{Rem}_{\mathrm{corr}} = \mu_{p_{sp}}$$

or

$$\left[\frac{W_p}{\frac{\Sigma U^2}{g_c}}\right]_t \mathrm{Rem}_{\mathrm{corr}} = \left[\frac{W_p}{\frac{\Sigma U^2}{g_c}}\right]_{sp}$$

which may be written as

$$\frac{N_t}{N_{sp}} = \sqrt{\frac{\Sigma U^2{}_t}{\Sigma U^2{}_{sp}}} = \sqrt{\frac{W_{pt}\,\mathrm{Rem}_{\mathrm{corr}}}{w_{p_{sp}}}}$$

where

$$W_{p_t} = \left[\left(\frac{n}{n-1}\right) f Z_i R T_i \left(\frac{p_d}{p_i}\right)^{\frac{n-1}{n}} - 1\right]_t$$

and

$$W_{p_{sp}} = \left[\left(\frac{n}{n-1}\right) f Z_i R T_i \left(\frac{p_d}{p_i}\right)^{\frac{n-1}{n}} - 1\right]_{sp}$$

These relationships may be used to estimate the appropriate test speed. It is an estimate in the sense that the appropriate test speed depends upon a prior knowledge of the test efficiency and gas properties.

The anticipated test efficiency is estimated from the design value when available. The anticipated polytropic exponent may then be estimated for ideal gases from

$$\left(\frac{n}{n-1}\right)_t = \eta_{pt}\left(\frac{k}{k-1}\right)_t$$

Copyright ASME International
Provided by IHS under license with ASME
No reproduction or networking permitted without license from IHS
Not for Resale

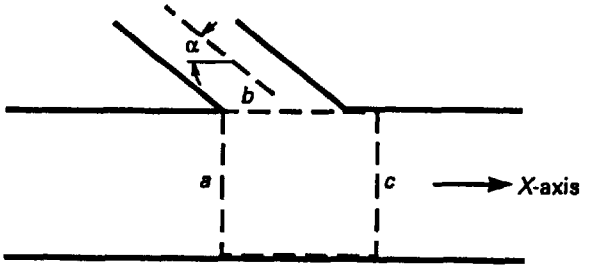

FIG. E.2

and for real gases from

$$n_t = \frac{1}{Y - m\,(1 + X)}$$

E.5 INLET STATE FOR MIXED STREAMS

For compressor sections with multiple inlets it is necessary to establish the mixed inlet conditions. Ideally this would be the mixed stagnation state. It is conceivable that this state might be measured by obtaining internal pressure and temperature measurements where the compressor geometry allows. However, in practice these are very difficult measurements to obtain. In some cases an actual full mixed state may not even occur.

The following development provides a standard method for calculation of the mixed conditions. A number of simplifying assumptions are made. The computed reference conditions are only an approximation to the stagnation state after mixing. The intent is simply to model the main features of the mixing process. It is presumed that the same model when applied to the test and specified operating conditions will produce consistent results. Other mixing models may be appropriate for particular compressor geometries. These may also be used with mutual consent by the parties to the test.

E.5.1 Inlet Stagnation Enthalpy. The inlet stagnation enthalpy is deduced from the average total enthalpy of the mixed streams. In the absence of work and heat transfer in the mixing section,

$$h_i = \frac{w_a\,h_a + w_b\,h_b}{w_a + w_b}$$

where the subscripts a and b designate the individual stream values before mixing.

E.5.2 Inlet Stagnation Pressure. The inlet pressure may be calculated by applying the linear momentum principle to a simplified mixing section model. The geometry under consideration is given in Fig. E.2.

The following simplifying assumptions are made.

(a) The flow is one dimensional. Conditions at stations a, b, and c are described by constant average values for the cross section. The flows are thus treated as being fully mixed.

(b) The flow velocity at stations a and c is assumed to be parallel to the x axis.

(c) The flow velocity at station b is assumed to enter at an angle with respect to the x axis.

(d) The static pressure at station b is assumed equal to the static pressure at station a.

(e) The wall shear stress is ignored.

Copyright ASME International
Provided by IHS under license with ASME
No reproduction or networking permitted without license from IHS
Not for Resale

The subscript s in the following development refers to static conditions.

With these assumptions the x-component of the linear momentum conservation equation for the control volume shown is

$$144\,(p_{s_a} A_c - p_{s_c} A_c) = (w_c V_c - w_a V_a - w_b V_b \cos \alpha_b) \frac{1}{60\, g_c}$$

Introducing the continuity of mass equation yields the mixed inlet static pressure

$$144\, p_{s_c} = \left[1 + \left(\frac{V_a^2/g_c}{p_{s_a}/\rho_{s_a}}\right)\left(\frac{A_a}{A_c}\right)\left\{1 - \left(1 + \frac{w_b}{w_a}\right)^2 \left(\frac{\rho_{s_a}}{\rho_{s_c}}\right)\left(\frac{A_a}{A_c}\right) + \left(\frac{w_b}{w_a}\right)\left(\frac{V_b}{V_a}\right)\cos\alpha_b\right\}\right] p_{s_a}$$

The inlet stagnation pressure is obtained by adding the dynamic head deduced from the average Fluid Mach number at c.

The actual form of the equations to be solved depends upon the choice of gas. The following set amenable to iterative solution may be written for ideal gases.

$$\frac{p_{s_c}}{p_{s_a}} = 1 + \left(\frac{V_a^2}{p_{s_a}/\rho_{s_a}}\right)\left(\frac{A_a}{A_c}\right)\left\{1 - \left(1 + \frac{w_b}{w_a}\right)^2 \left(\frac{\rho_{s_a}}{\rho_{s_c}}\right)\left(\frac{A_a}{A_c}\right) + \left(\frac{w_b}{w_a}\right)\left(\frac{V_b}{V_a}\right)\cos\alpha_b\right\}$$

$$\frac{V_a^2/g_c}{p_{s_a}/\rho_{s_a}} = kM_a^2$$

$$\frac{\rho_{s_a}}{\rho_{s_c}} = \frac{\rho_a}{\rho_c}\left[\frac{1 + \left(\frac{k-1}{2}\right)M_c^2}{1 + \left(\frac{k-1}{2}\right)M_a^2}\right]^{\frac{1}{k-1}}$$

$$\frac{\rho_a}{\rho_c} = \frac{T_c/T_a}{p_c/p_a}$$

$$\frac{V_b}{V_a} = \frac{M_b}{M_a}\sqrt{\frac{T_b}{T_a}\left[\frac{1 + \left(\frac{k-1}{2}\right)M_a^2}{1 + \left(\frac{k-1}{2}\right)M_b^2}\right]}$$

Copyright ASME International
Provided by IHS under license with ASME
No reproduction or networking permitted without license from IHS
Not for Resale

$$\frac{M_c}{M_a} = \frac{\left(1 + \frac{w_b}{w_a}\right)\left(\frac{T_c}{T_s}\right)^{\frac{1}{2}}}{\frac{A_c}{A_a}\frac{p_c}{p_a}} \frac{\sqrt{1 + \left(\frac{k-1}{2}\right) M_a^2}}{\left[1 + \left(\frac{k-1}{2}\right) M_a^2\right]^{\frac{k}{k-1}}} \frac{\left[1 + \left(\frac{k-1}{2}\right) M_c^2\right]^{\frac{k}{k-1}}}{\sqrt{\left[1 + \frac{k-1}{2} M_c^2\right]}}$$

$$\frac{p_c}{p_a} = \frac{p_{s_c}}{p_{s_a}} \left[\frac{1 + \frac{k-1}{2} M_c^2}{1 + \frac{k-1}{2} M_a^2}\right]^{\frac{k}{k-1}}$$

A simpler formulation assuming incompressible flow may be written as

$$\frac{p_c}{p_a} = 1 + \lambda \left[2\left(\frac{w_b}{w_a}\right)\sqrt{\frac{1}{\lambda}\left(\frac{p_b}{p_a} - 1\right) + 1}\left(\frac{A_a}{A_c}\right)\cos\alpha_b + 2\left(\frac{A_a}{A_c}\right) - \left(1 + \frac{w_b}{w_a}\right)^2\left(\frac{A_a}{A_c}\right)^2 - 1\right]$$

where

$$\lambda = \frac{\frac{\rho}{2g_c}\left[\frac{\frac{w}{60}}{\rho A}\right]^2}{144\, p_a}$$

This formulation will yield similar results to the compressible solution for low Fluid Mach numbers and nearly equal mixing stream densities.

Figure E.3 shows some typical results based upon the preceding equations.

Copyright ASME International
Provided by IHS under license with ASME
No reproduction or networking permitted without license from IHS
Not for Resale

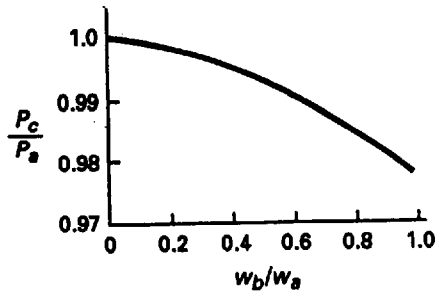

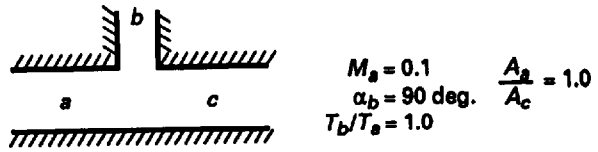

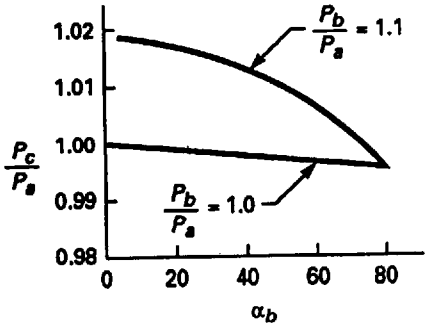

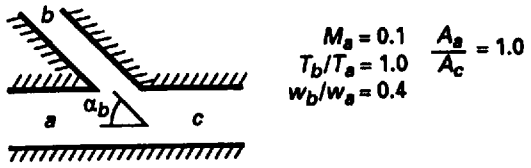

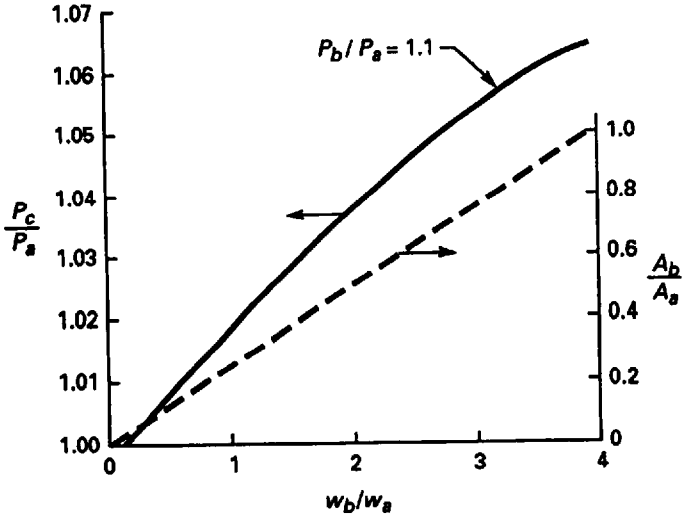

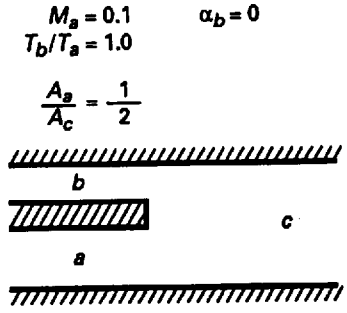

$\frac{A_b}{A_a}$ is implied

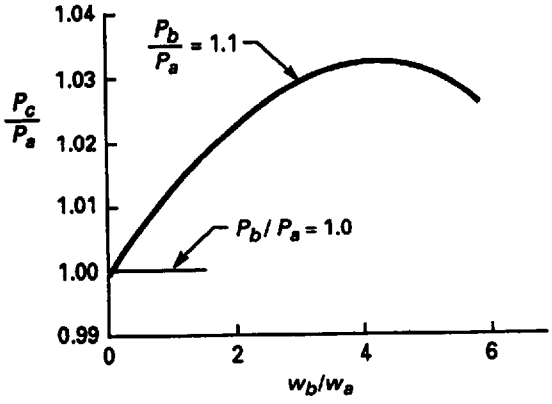

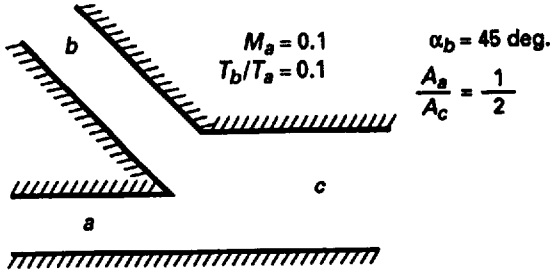

FIG. E.3

Copyright ASME International
Provided by IHS under license with ASME
No reproduction or networking permitted without license from IHS
Not for Resale
STD.ASME PTC 10-ENGL 1997 ■ 0759670 0605603 121 ■

APPENDIX F
REYNOLDS NUMBER CORRECTION

(This Appendix is not a part of ASME PTC 10-1997.)

The Reynolds number correction for centrifugal compressors recommended in this Code has been changed significantly from the previous issue of PTC 10. The changes resulted from new references not previously available. The old correction for centrifugal compressors was adapted from work on axial compressors [Ref. (D.8)] since no centrifugal compressor data was available. The correction for axial compressors remains unchanged from the previous issue of the Code.

The method of correction, for centrifugal compressors, recommended in this Code is based on the work done by Weisner [Ref. (D.2)] but has been simplifed for ease of application. The data presented by Weisner suggests that the Machine Reynolds number at which a compressor operates has an effect not only on the efficiency, but on the flow coefficient and work input coefficient as well. The corrections are all based on the departure from a nominal Machine Reynolds number which may vary from one manufacturer to another. The correction used in this Code, for centrifugal compressors, is simplified in that the correction is only applied to the efficiency and polytropic work coefficient. No correction is applied to the flow coefficient or the work input coefficient. Additionally, the nominal condition has been standardized to a Machine Reynolds number $= 4.8 \times 10^6 \times b$ and the surface roughness to 0.000125 in.

Another correction method has been documented by Simon and Bulskamper [Ref. (D.4)]. This method is developed by analogy with the turbulent flow in rough pipes. Semi-empirical correlations are derived for efficiency, flow coefficient, head coefficient, and work coefficient. The equations developed include a correction to the head, work, and flow coefficients. Similar correction methods have been proposed by Casey [Ref. (D.14)] and Strub [Ref. (D.16)]. Test data supporting Reynolds number corrections has been published by NASA [Ref. (D.18)].

Copyright ASME International
Provided by IHS under license with ASME
No reproduction or networking permitted without license from IHS
Not for Resale

APPENDIX G
REFINED METHODS FOR CALCULATING TOTAL CONDITIONS

(This Appendix is not a part of ASME PTC 10-1997.)

Guidelines are presented for calculating total pressure and total temperature with accuracies that exceed those determined by the simpler methods of paras. 5.4.3 and 5.4.4.

The details of thermodynamic property evaluations are not a part of this Code. The calculations outlined below for both ideal gases and real gases must be supplemented by the data and procedures needed to provide the required properties.

Compressible flow and uniform velocity are assumed for the measurement station in question. Static absolute pressure, p_{static}, and measured absolute temperature, T_{meas}, are the only local measurements. The mass flow rate, w, and pipe flow area, A, are known and thermodynamic properties are calculable as needed. The remaining key assumption is the recovery factor, r_f, which is defined in para. 5.4.4 in terms of temperature.

G.1 IDEAL GASES

The following iterative procedure is appropriate:

Step 1 — Let $t_{static} = t_{meas}$ be the initial estimate of static temperature.

Step 2 — Calculate needed properties corresponding to (p_{static}, t_{static}):

ρ = density (from $\rho = 144\ p/Rt$)

c_p – specific heat at constant pressure

k – ratio of specific heats

Step 3 — Compute velocity

$$V = (w/60)/\rho A$$

Step 4 — Compute Mach number

$$M = \frac{V}{\sqrt{g_c\, k\, R\, t_{static}}}$$

Step 5 — Compute total temperature

$$t = t_{meas} + \frac{(1 - r_f)\, V^2}{2Jg_c c_p}$$

Step 6 — Compute static temperature

$$t_{static} = \frac{t}{1 + \dfrac{(k-1)\, M^2}{2}}$$

Step 7 — Compare t_{static} from step 6 with the value used in previous steps. If agreement is unacceptable, use t_{static} from step 6 and repeat steps 2 through 7 until the change in t_{static} is acceptable (for example, $\Delta t_{static} < 0.05°F$).

Step 8 — Calculate total pressure

$$p = p_{static}\left[1 + \frac{(k-1)\, M^2}{2}\right]^{\frac{k}{k-1}}$$

Should Fluid Mach numbers be unusually high, greater than 0.3 for example, accuracy could be improved by evaluating c_p and k at both t and t_{static}

Copyright ASME International
Provided by IHS under license with ASME
No reproduction or networking permitted without license from IHS
Not for Resale

and using average values of c_p and k in the above calculations.

G.2 REAL GASES

The term "real gas" normally suggests that the compressibility factor, Z, is not unity and must be included in p-v-T calculations according to $pv = ZRT$.

The purpose of an equation of state is to provide a mathematical expression relating pressure, volume, and temperature which corresponds as closely as possible to known or expected p-v-t behavior.

Most equations of state use temperature and specific volume (or density) as independent variables, from which pressure may be calculated. That is,

$$\rho = p(t,v)$$

Rigorous thermodynamic procedures are available for evaluating all thermodynamic properties needed for compressor calculations even though only the equation of state and low pressure (ideal gas) specific heat correlations are known. Only the results of these calculations are referred to below, such as:

(a) $t\,(p, h)$, temperature obtained from pressure and enthalpy

(b) $p\,(h,s)$, pressure obtained from enthalpy and entropy

The recovery factor, r_f, will be defined in terms of enthalpy rather than temperature, giving

$$r_f = \frac{h_{meas} - h_{static}}{h - h_{static}}$$

This definition is the same as that given in para. 5.4.4 when applied to ideal gases. The above definition is considered to be more appropriate for real gas calculations, and $r_f = 0.65$ remains the best available value for typical applications.

The following iterative procedure is appropriate:

Step 1 — Let $t_{static} = t_{meas}$ be the initial estimate of static temperature for the calculation of density.

Step 2 — Compute static density

$$\rho_{static}\ (p_{static},\ t_{static})$$

Step 3 — Compute velocity

$$v = w60/A\ \rho_{static}$$

Step 4 — Compute kinetic energy

$$ke = \frac{V^2}{2g_cJ}$$

Step 5 — Compute "measured" enthalpy

$$h_{meas}\ (p_{static},\ t_{meas})$$

Step 6 — Compute static enthalpy

$$h_{static} = h_{meas} - 0.65\ ke$$

Step 7 — Compute static temperature

$$t_{static}\ (p_{static},\ h_{static})$$

Step 8 — Compare T_{static} from step 7 with the value used in previous steps. If agreement is unacceptable, then use T_{static} from step 7 and repeat steps 2 through 8 until the change in T_{static} is acceptable (for example, $\Delta T_{static} < 0.05$ °R).

Step 9 — Compute total enthalpy

$$h = h_{static} + ke$$

Step 10 — Compute static entropy

$$s_{static}\ (p_{static},\ t_{static})$$

Step 11 — Compute total pressure

$$p\ (h,\ s_{static})$$

(Recall that static and total entropies are the same.)

Step 12 — Compute total temperature

$$t(p,\ h)$$

Copyright ASME International
Provided by IHS under license with ASME
No reproduction or networking permitted without license from IHS
Not for Resale

APPENDIX H
SI UNITS

(This Appendix is not a part of ASME PTC 10-1997.)

Symbol	Description	U.S. Customary Units	Conversion X Factor =	SI Units
A	Flow channel cross sectional area	ft^2	0.0929	m^2
a	Acoustic velocity	ft/sec	0.3048	m/s
b	Tip width	ft	0.3048	m
C	Coefficient of discharge	dimensionless	1	dimensionless
C	Molal specific	Btu/lbmole · °F	1	N-m/kgmole · K
c	Specific heat	Btu/lbm · °F	4183	N-m/kg · K
c_p	Specific heat at constant pressure	Btu/lbm · °F	4183	N · m/kg · K
c_v	Specific heat at constant volume	Btu/lbm · °F	4183	N · m/kg · K
D	Diameter	in.	0.0254	m
d	Diameter of fluid meter	in.	0.0254	m
e	Relative error	dimensionless	1	dimensionless
Fa	Thermal expansion factor for fluid meter	dimensionless	1	dimensionless
f	Polytropic work factor	dimensionless	1	dimensionless
g	Acceleration of gravity	ft/sec^2	0.3048	m/s^2
g_c	Dimensional constant	$32.174 \frac{ft \cdot lbm}{lbf + sec^2}$	0.03108	$1 \frac{m \cdot kg}{N \cdot s^2}$
H	Molal enthalpy	Btu/1bmole	2324	N · m/kg · mole
HR	Humidity ratio	lbm · w/lbm · da	1	kg · w/kg · da
h	Enthalpy	Btu/lbm	2324	N · m/kg
h_r	Coefficient of heat transfer per unit area (for combined convection and radiation)	Btu/hr · ft^2 · °F	0.04896	N · m/s · m^2 · K
J	Mechanical equivalent of heat	$778.17 \frac{ft \cdot lbf}{Btu}$	—	not used
K	Flow coefficent	dimensionless	1	dimensionless
k	Ratio of specific heats, c_p/c_v	dimensionless	1	dimensionless
log	Common logarithm (base 10)	dimensionless	1	dimensionless

Copyright ASME International
Provided by IHS under license with ASME
No reproduction or networking permitted without license from IHS
Not for Resale

Symbol	Description	U.S. Customary Units	Conversion X Factor =	SI Units
ln	Naperian (natural) logarithm	dimensionless	1	dimensionless
MW	Molecular weight	lbm/lbmole	1	kg/kgmole
Mm	Machine Mach number	dimensionless	1	dimensionless
M	Fluid Mach number	dimensionless	1	dimensionless
m	Polytropic exponent for a path on the $p - T$ diagram	dimensionless	1	dimensionless
m	Mass (Appendix B only)	lbm	0.4536	kg
N	Rotative speed	rpm	0.01667	Hz
n	Polytropic exponent for a path on the $p - v$ diagram	dimensionless	1	dimensionless
n	Number of moles (Appendix B only)	lbmole	0.4536	kgmole
n_s	Isentropic exponent for an isentropic path on a $p - v$ diagram	dimensioness	1	dimensionless
P	Power	hp	0.746	kW
p	Pressure	psi	6895	N/m^2(Pa)
P_v	Velocity pressure	psi	6895	N/m^2(Pa)
Qm	Total mechanical losses (equivalent)	Btu/min	0.01757	kW
Qr	Casing heat transfer	Btu/min	0.01757	kW
Qsl	External seal loss equivalent	Btu/min	0.01757	kW
q	Capacity	ft^3/min	0.0004719	m^3/s
q	Volume flow rate	ft^3/min	0.0004719	m^3/s
R	Gas constant	ft · lbf/lbm · °R	5.381	N · m/kg · K
RA, RB, RC	Machine Reynolds number correction constants	dimensionless	1	dimensionless
Re	Fluid Reynolds number	dimensionless	1	dimensionless
Rem	Machine Reynolds number	dimensionless	1	dimensionless
RH	Relative humidity	dimensionless	1	dimensionless
r	Pressure ratio across fluid meter	dimensionless	1	dimensionless
r_f	Recovery factor	dimensionless	1	dimensionless
r_p	Pressure ratio	dimensionless	1	dimensionless
r_q	Flow rate ratio	dimensionless	1	dimensionless
r_t	Temperature ratio	dimensionless	1	dimensionless
r_v	Specific volume ratio	dimensionless	1	dimensionless
S	Molal entropy	Btu/lbmole · °R	4183	N · m/kgmole · K
S_c	Heat transfer area of exposed compressor casing and adjoining pipe	ft^2	0.09294	m^2
s	Entropy	BTU/lbm · °R	4183	N · m/kg · K
T	Temperature	°R	0.5556	K
t	Temperature	°F	0.5556 (°F + 459.67)	K

Copyright ASME International
Provided by IHS under license with ASME
No reproduction or networking permitted without license from IHS
Not for Resale

Symbol	Description	U.S. Customary Units	Conversion X Factor =	SI Units
U	Blade tip speed	ft/sec	0.3048	m/s
u	Internal energy	Btu/lbm	2324	N · m/kg
V	Fluid velocity	ft/sec	0.3048	m/s
v	Specific volume	ft^3/lbm	0.06243	m^3/kg
W	Work	ft/lbf/lbm	2.989	N · m/kg
w	Mass flow rate	lbm/min	0.00756	kg/s
X	Compressibility function	dimensionless	1	dimensionless
x	Mole fraction	dimensionless	1	dimensionless
Y	Compressibility function	dimensionless	1	dimensionless
y	Elevation	ft	0.3048	m
Z	Compressibility factor as used in ideal gas law, $pv = ZRT$	dimensionless	1	dimensionless
β	Diameter ratio of fluid meter	dimensionless	1	dimensionless
∂	Partial derivative	dimensionless	1	dimensionless
η	Efficiency	dimensionless	1	dimensionless
μ	Absolute viscosity	lbm/ft · sec	1.488	kg/m · s
μ_{in}	Work input coefficient	dimensionless	1	dimensionless
μ_p	Polytropic work coefficient	dimensionless	1	dimensionless
μ_s	Isentropic work coefficient	dimensionless	1	dimensionless
ν	Kinematic viscosity	ft^2/sec	0.09294	m^2/s
ρ	Density	lbm/ft^3	16.02	kg/m^3
Σ	Summation	dimensionless	—	dimensionless
γ	Torque	ft · lbf	1.356	N · m
ϵ	Surface roughness	in	0.0254	m
Ω	Total work input coefficient	dimensionless	1	dimensionless
ϕ	Flow coefficient	dimensionless	1	dimensionless

Copyright ASME International
Provided by IHS under license with ASME
No reproduction or networking permitted without license from IHS
Not for Resale

ASME Services

ASME is committed to developing and delivering technical information. At ASME's Information Central, we make every effort to answer your questions and expedite your orders. Our representatives are ready to assist you in the following areas:

ASME Press
Codes & Standards
Credit Card Orders
IMechE Publications
Meetings & Conferences
Member Dues Status
Member Services & Benefits
Other ASME Programs
Payment Inquiries
Professional Development
Short Courses
Publications
Public Information
Self-Study Courses
Shipping Information
Subscriptions/Journals/Magazines
Symposia Volumes
Technical Papers

How can you reach us? It's easier than ever!

There are four options for making inquiries* or placing orders. Simply mail, phone, fax, or E-mail us and an Information Central representative will handle your request.

Mail	*Call Toll Free*	*Fax-24 hours*	*E-Mail-24 hours*
ASME	**US & Canada:** 800-THE-ASME	973-882-1717	Infocentral
22 Law Drive, Box 2900	(800-843-2763)	973-882-5155	@asme.org
Fairfield, New Jersey	**Mexico:** 95-800-THE-ASME		
07007-2900	(95-800-843-2763)		
	Universal: 973-882-1167		

* Information Central staff are not permitted to answer inquiries about the technical content of this code or standard. Information as to whether or not technical inquiries are issued to this code or standard is shown on the copyright page. All technical inquiries must be submitted in writing to the staff secretary. Additional procedures for inquiries may be listed within.

Copyright ASME International
Provided by IHS under license with ASME
No reproduction or networking permitted without license from IHS
Not for Resale