ASME PALD INTERPRETATIONS

Replies to Technical Inquiries
March 1994 – March 1997

FOREWORD

This publication includes all of the replies issued between the indicated dates by the Secretary for the ASME PALD Committee, Safety Standards for Portable Automotive Lifting Devices, to inquiries concerning interpretations of technical aspects of ASME PALD-1997 and previous editions.

These replies are taken verbatim from the original letters except for a few typographical corrections and some minor editorial corrections made for the purpose of improved clarity.

The interpretations were prepared in accordance with the accredited ASME procedures. ASME procedures provide for reconsideration of these interpretations when or if additional information is available which the inquirer believes might affect the interpretation. Further, persons aggrieved by an interpretation may appeal to the cognizant ASME committee or subcommittee. ASME does not "approve," "certify," "rate," or "endorse" any item, construction, proprietary device, or activity.

Copyright ASME International
Provided by IHS under license with ASME
No reproduction or networking permitted without license from IHS
Not for Resale

STD.ASME PALD INT-ENGL 0759670 0587274 T89

Interpretation: 97-1

Subject: PALD-10b–1991

Date Issued: June 15, 1994

Question: What is meant by the term *durable materials and attaching methods* in Section 4?

Reply: This phrase was not intended to mean a stamped or etched plate riveted or welded in place. Many of the manufacturers of this equipment were using this type of construction. However, many were also using "durable" labels. The decision to use the phrase *durable materials and attaching methods* was agreed to in light of this fact. The labeling method must be suitable for normal wear and contact with automotive fluids such as gas, oil, transmission fluid, power steering fluid, brake fluid, and antifreeze.

The PALD Committee recognized that any label could be destroyed or removed by the user if done so intentionally. However, the definition was intended to mean that contact with normal automotive fluids would not adversely affect the label's attaching methods (e.g., adhesive) nor the legibility of the label. Additionally, the normal handling damage expected with this type of product would not cause the label to come off, or be scratched or marred to the extent that it was illegible.

Interpretation: 97-2

Subject: PALD-12–1986

Date Issued: February 2, 1995

Question (1): Paragraph 5.1.4 raises questions about whether the ability to achieve the criterion is dependent upon the actions of the operator. Under one view, the above criterion sets the standard for design of a portable lifting device so that the maximum rate of descent of a rated load cannot exceed 3 in./sec. Under another view, the rate at which the load descends is dependent upon the ability of the operator to control the lowering speed by manipulating the release mechanism. Does the above criterion mean that the shop crane must be designed so that the rated load does not descend in excess of 3 in./sec, even if the release mechanism is fully open?

Reply (1): No.

Question (2): Does the criterion mean that a greater rate of descent is permitted, subject to the operator's control by manipulation (fine tuning) of the release mechanism?

Reply (2): Yes.

Copyright ASME International
Provided by IHS under license with ASME
No reproduction or networking permitted without license from IHS
Not for Resale

Interpretation: 97-3

Subject: PALD-1a–1989

Date Issued: February 2, 1995

Question: Attached is a sketch of two possible methods of applying the load at a 5 deg angle to the vertical axis of the jack. With regard to para. 5.1.2, which method is correct for the angular load test?

Reply: Method A is acceptable. Method B is not acceptable, but would be acceptable if the ram was squared (not beveled) at 5 deg.

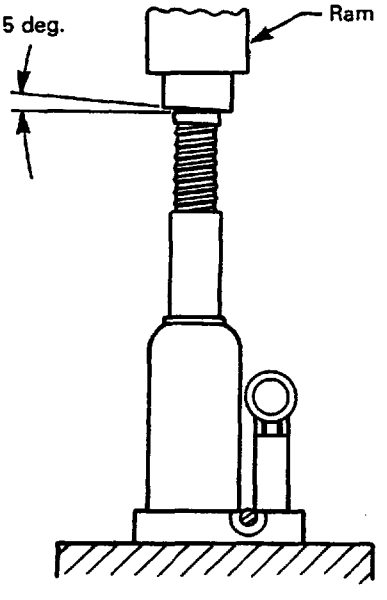

5 deg. Angle Plate, Top Only
Method A

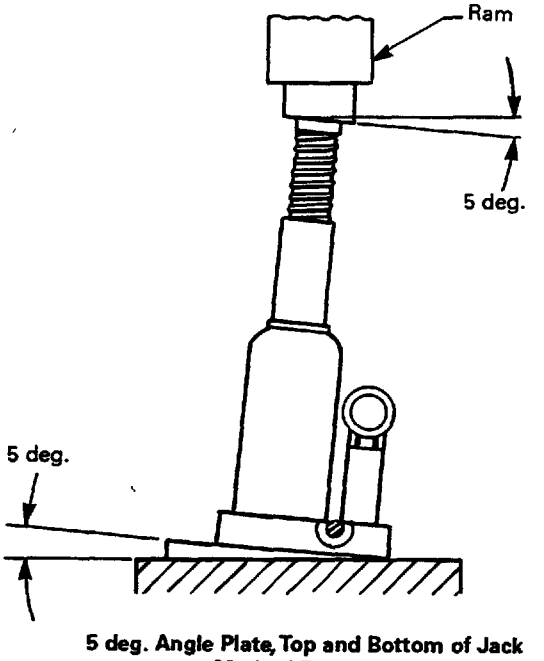

5 deg. Angle Plate, Top and Bottom of Jack
Method B

Copyright ASME International
Provided by IHS under license with ASME
No reproduction or networking permitted without license from IHS
Not for Resale

ASME PALD INTERPRETATIONS

Replies to Technical Inquiries
March 1994 – July 1999

FOREWORD

This publication includes all of the replies issued between the indicated dates by the Secretary for the ASME PALD Committee, Safety Standards for Portable Automotive Lifting Devices, to inquiries concerning interpretations of technical aspects of ASME PALD-1997 and previous editions.

These replies are taken verbatim from the original letters except for a few typographical corrections and some minor editorial corrections made for the purpose of improved clarity.

The interpretations were prepared in accordance with the accredited ASME procedures. ASME procedures provide for reconsideration of these interpretations when or if additional information is available which the inquirer believes might affect the interpretation. Further, persons aggrieved by an interpretation may appeal to the cognizant ASME committee or subcommittee. ASME does not "approve," "certify," "rate," or "endorse" any item, construction, proprietary device, or activity.

Copyright ASME International
Provided by IHS under license with ASME
No reproduction or networking permitted without license from IHS
Not for Resale

Interpretation: 97-4

Subject: PALD-4–1993, Vehicle Support Stands, Section 2; Design, Para. 2.6.1; Stability

Date Issued: October 1, 1997

Question: Shall the horizontal measurement "H" be measured from the saddle outside edge or from the saddle point of load contact?

Reply: The horizontal measurement "H" shall be measured from the saddle outside edge.

Interpretation: 97-5

Subject: PALD-4–1993, Vehicle Support Stands, Section 4; Design Qualification Testing, Para. 4.1.1; Off Center Load Test

Date Issued: October 1, 1997

Question (1): What is the meaning of "a static, vertical load," as stated in Part 4, para. 4.1.1?

Reply (1): The applied load is meant to be a horizontally constrained vertical load.

NOTE: The 1997 Edition of the PALD Standard has been revised to read "A horizontally constrained, vertical load."

Question (2): How is permanent reduction in overall height to be measured?

Reply (2): The preload is optional. Any one of the methods described is permissible. The intent of the 50% preload is to permit the stands system to stabilize.

Copyright ASME International
Provided by IHS under license with ASME
No reproduction or networking permitted without license from IHS
Not for Resale

Interpretation: 97-6

Subject: Paragraph 16-4.1.1

Date Issued: July 28, 1999

Question (1): Are the test loads for an individual automotive ramp which is required by para. 16-4.1.1 to be equal to rated capacity, one half of the gross vehicle weight rating, or should further consideration be taken with regard to a vehicles front to rear weight ratio when performing the off-center and proof load test?

Reply (1): The test load of each individual ramp should be equal to the rated capacity, i.e. if the ramps are rated at 5000 pounds per pair, then each ramp should be tested at 5000 pounds. If the rated capacity is expressed as the Gross Vehicle Weight, then the Gross Vehicle Weight is the rated capacity.

Question (2): If the weight ratio is to be considered, should it be 60:40 (front:rear) or 50:50?

Reply (2): The PALD Standard does not consider the weight ratio. Pleas refer to the reply to Question (1).

Question (3): Are these weight percentages of the gross vehicle weight rating required to be marked on automotive ramps as the true rated capacity or is the total gross vehicle weight rating per pair sufficient?

Reply (3): The PALD Standard does not consider the weight ratio. Refer to the reply to Question (1).

Copyright ASME International
Provided by IHS under license with ASME
No reproduction or networking permitted without license from IHS
Not for Resale

ASME Services

ASME is committed to developing and delivering technical information. At ASME's Information Central, we make every effort to answer your questions and expedite your orders. Our representatives are ready to assist you in the following areas:

ASME Press
Codes & Standards
Credit Card Orders
IMechE Publications
Meetings & Conferences
Member Dues Status
Member Services & Benefits
Other ASME Programs
Payment Inquiries
Professional Development
Short Courses
Publications
Public Information
Self-Study Courses
Shipping Information
Subscriptions/Journals/Magazines
Symposia Volumes
Technical Papers

How can you reach us? It's easier than ever!

There are four options for making inquiries* or placing orders. Simply mail, phone, fax, or E-mail us and an Information Central representative will handle your request.

Mail	*Call Toll Free*	*Fax-24 hours*	*E-Mail-24 hours*
ASME	**US & Canada:** 800-THE-ASME	973-882-1717	Infocentral
22 Law Drive, Box 2900	(800-843-2763)	973-882-5155	@asme.org
Fairfield, New Jersey	**Mexico:** 95-800-THE-ASME		
07007-2900	(95-800-843-2763)		
	Universal: 973-882-1167		

* Information Central staff are not permitted to answer inquiries about the technical content of this code or standard. Information as to whether or not technical inquiries are issued to this code or standard is shown on the copyright page. All technical inquiries must be submitted in writing to the staff secretary. Additional procedures for inquiries may be listed within.

Copyright ASME International
Provided by IHS under license with ASME
No reproduction or networking permitted without license from IHS
Not for Resale