ASME NUM-1–2004
(Revision of ASME NUM-1–2000)

Rules for Construction of Cranes, Monorails, and Hoists (With Bridge or Trolley or Hoist of the Underhung Type)

AN AMERICAN NATIONAL STANDARD



The American Society of Mechanical Engineers

Copyright ASME International
Provided by IHS under license with ASME
No reproduction or networking permitted without license from IHS

Not for Resale

ASME NUM-1–2004

(Revision of ASME NUM-1–2000)

Rules for Construction of Cranes, Monorails, and Hoists (With Bridge or Trolley or Hoist of the Underhung Type)

AN AMERICAN NATIONAL STANDARD

The American Society of Mechanical Engineers

Three Park Avenue · New York, NY 10016

Copyright ASME International
Provided by IHS under license with ASME
No reproduction or networking permitted without license from IHS

Not for Resale

Date of Issuance: August 31, 2005

The next edition of this Standard is scheduled for publication in 2008. There will be no addenda or written interpretations of the requirements of this Standard issued to this edition.

ASME is the registered trademark of The American Society of Mechanical Engineers.

This code or standard was developed under procedures accredited as meeting the criteria for American National Standards. The Standards Committee that approved the code or standard was balanced to assure that individuals from competent and concerned interests have had an opportunity to participate. The proposed code or standard was made available for public review and comment that provides an opportunity for additional public input from industry, academia, regulatory agencies, and the public-at-large.

ASME does not "approve," "rate," or "endorse" any item, construction, proprietary device, or activity.

ASME does not take any position with respect to the validity of any patent rights asserted in connection with any items mentioned in this document, and does not undertake to insure anyone utilizing a standard against liability for infringement of any applicable Letters Patent, nor assumes any such liability. Users of a code or standard are expressly advised that determination of the validity of any such patent rights, and the risk of infringement of such rights, is entirely their own responsibility.

Participation by federal agency representative(s) or person(s) affiliated with industry is not to be interpreted as government or industry endorsement of this code or standard.

ASME accepts responsibility for only those interpretations issued in accordance with governing ASME procedures and policies which preclude the issuance of interpretations by individual volunteers.

No part of this document may be reproduced in any form,
in an electronic retrieval system or otherwise,
without the prior written permission of the publisher.

The American Society of Mechanical Engineers
Three Park Avenue, New York, NY 10016-5990

Copyright © 2005 by
THE AMERICAN SOCIETY OF MECHANICAL ENGINEERS
All rights reserved
Printed in U.S.A.

--`,,```,,,,````-`-`,,`,,`,`,,`---

Copyright ASME International
Provided by IHS under license with ASME
No reproduction or networking permitted without license from IHS

Not for Resale

CONTENTS

Foreword viii
Standards Committee Roster ix
Preparation of Technical Inquiries to the Nuclear Quality Assurance Committee xi
Summary of Changes xii

Section NUM-G-1000 Introduction 1
NUM-G-1100 General 1
NUM-G-1200 Scope 1
NUM-G-1300 Applications 1
NUM-G-1400 Responsibility 1

Section NUM-G-2000 Environmental Conditions of Service 2
NUM-G-2100 General 2
NUM-G-2200 Radiation 2
NUM-G-2300 Temperature 2
NUM-G-2400 Pressure 2
NUM-G-2500 Humidity 2
NUM-G-2600 Chemical 2
NUM-G-2700 Wind 3
NUM-G-2800 Seismic 3
NUM-G-2900 Drainage 3

Section NUM-G-3000 Performance Requirements 4
NUM-G-3100 General 4
NUM-G-3200 Service Class 4
NUM-G-3300 Capacity 4
NUM-G-3400 Speeds 4
NUM-G-3500 Other Considerations 4

Section NUM-G-4000 Coatings and Finishes 8
NUM-G-4100 Coating Service Levels 8
NUM-G-4200 Specific Requirements for Coating Service Levels 8

Section NUM-G-5000 Quality Assurance 10
NUM-G-5100 Requirements 10
NUM-G-5200 Documentation 10

Section NUM-G-6000 Definitions 11
NUM-G-6100 Definitions 11

Section NUM-G-7000 Referenced Codes and Standards 16
NUM-G-7100 General 16

Section NUM-G-8000 Nomenclature 18
NUM-G-8100 General 18

--`,,```,,,,````-`-`,,`,,`,`,,`---

Copyright ASME International
Provided by IHS under license with ASME
No reproduction or networking permitted without license from IHS

Not for Resale

Section NUM-I-1000	**Introduction**	19
NUM-I-1100	General	19
NUM-I-1300	Applications	19
Section NUM-I-5000	**Jib Cranes**	21
NUM-I-5300	Mechanical	21
Section NUM-I-6000	**Monorail Systems**	22
NUM-I-6300	Mechanical	22
Section NUM-I-7000	**Overhead Hoists and Under-Running Trolleys**	23
NUM-I-7700	Under-Running Trolleys	23
NUM-I-7900	Hoist Common Requirements	23
Section NUM-I-8000	**Common Requirements and Criteria**	30
NUM-I-8200	Structural	30
NUM-I-8300	Mechanical	30
NUM-I-8400	Electrical	30
NUM-I-8500	Inspection and Testing	30
Section NUM-II-1000	**Introduction**	39
NUM-II-1100	General	39
NUM-II-1300	Applications	39
Section NUM-II-7000	**Overhead Hoists and Under-Running Trolleys**	40
NUM-II-7100	Description	40
Section NUM-II-8000	**Common Requirements and Criteria**	41
NUM-II-8200	Structural	41
NUM-II-8300	Mechanical	46
NUM-II-8400	Electrical	46
NUM-II-8500	Inspection and Testing	47
Section NUM-III-1000	**Introduction**	48
NUM-III-1100	General	48
NUM-III-1300	Applications	48
Section NUM-III-2000	**Underhung Cranes**	49
NUM-III-2100	Description	49
NUM-III-2200	Structural	49
NUM-III-2300	Mechanical	51
NUM-III-2400	Electrical	52
NUM-III-2500	Inspection and Testing	54
Section NUM-III-3000	**Top-Running Bridge and Gantry Cranes**	55
NUM-III-3100	Description	55
NUM-III-3200	Structural	55
NUM-III-3300	Mechanical	58
NUM-III-3400	Electrical	58
NUM-III-3500	Inspection and Testing	60
Section NUM-III-4000	**Traveling Wall Cranes**	61
NUM-III-4100	Description	61
NUM-III-4200	Structural	61
NUM-III-4300	Mechanical	62
NUM-III-4400	Electrical	62
NUM-III-4500	Inspection and Testing	64

Copyright ASME International
Provided by IHS under license with ASME
No reproduction or networking permitted without license from IHS
Not for Resale

Section NUM-III-5000 Jib Cranes 65
NUM-III-5100 Description 65
NUM-III-5200 Structural 65
NUM-III-5300 Mechanical 66
NUM-III-5400 Electrical 68
NUM-III-5500 Inspection and Testing 70

Section NUM-III-6000 Monorail Systems 71
NUM-III-6100 Description 71
NUM-III-6200 Structural 71
NUM-III-6300 Mechanical 74
NUM-III-6400 Electrical 74
NUM-III-6500 Inspection and Testing 75

Section NUM-III-7000 Overhead Hoists and Under-Running Trolleys 77
NUM-III-7100 Description 77
NUM-III-7200 Electric Wire-Rope Hoists 77
NUM-III-7300 Hand-Chain Hoists 80
NUM-III-7400 Electric-Chain Hoists 80
NUM-III-7500 Air-Operated Wire-Rope Hoists 83
NUM-III-7600 Air-Operated Chain Hoists 83
NUM-III-7700 Under-Running Trolleys 85
NUM-III-7800 Inspection and Testing 87
NUM-III-7900 Hoist Common Requirements 87

Section NUM-III-8000 Common Requirements and Criteria 96
NUM-III-8100 Description 96
NUM-III-8200 Structural 96
NUM-III-8300 Mechanical 113
NUM-III-8400 Electrical 122
NUM-III-8500 Inspection and Testing 134

Figures

NUM-I-7930-1 Type IA Dual Hoist Drive Unit With Single Drum 23
NUM-I-7930-2 Type IA Single Hoist Drive Unit With Drum Brake 24
NUM-I-7930-3 Type IA Dual Hoist Drive Unit With Dual Drum 25
NUM-I-7942-1 Drum Fleet Angle 26
NUM-I-7942-2 Sheave Fleet Angle 26
NUM-I-7942.3-1 Type IA Redundant Reeving With Single Drum 27
NUM-I-7942.3-2 Type IA Redundant Reeving With Single Drum 28
NUM-I-7942.3-3 Type IA Redundant Reeving With Dual Drum 28
NUM-II-8215.3-1 Boundary Conditions for Wheel-to-Rail Interface 43
NUM-III-2100-1 Single-Girder Underhung Crane 50
NUM-III-2100-2 Double-Girder Underhung Crane With Underhung Trolley 50
NUM-III-2100-3 Double-Girder Underhung Crane With Top-Running Trolley 51
NUM-III-2100-4 Single-Girder Underhung Semi-Gantry Crane 52
NUM-III-2321-1 Arrangement of Crane Bridge Drives (A-2 Drive) 53
NUM-III-2321-2 Arrangement of Crane Bridge Drives (A-4 Drive) 54
NUM-III-3100-1 Single-Girder Top-Running Crane 56
NUM-III-3100-2 Double-Girder Top-Running Crane With Underhung Trolley 56
NUM-III-3100-3 Single-Girder Top-Running Semi-Gantry Crane 57
NUM-III-3100-4 Single-Girder Top-Running Gantry Crane 57
NUM-III-3320-1 Arrangement of Crane Bridge Drives (A-1 Drive) 59
NUM-III-3320-2 Arrangement of Crane Bridge Drives (A-2 Drive) 59

Copyright ASME International
Provided by IHS under license with ASME
No reproduction or networking permitted without license from IHS
Not for Resale

NUM-III-3320-3 Arrangement of Crane Bridge Drives (A-4 Drive) 59
NUM-III-4100-1A Traveling Wall Crane 62
NUM-III-4100-1B Traveling Wall Crane 63
NUM-III-5100-1 Wall-Mounted Jib Cranes 66
NUM-III-5100-2 Free-Standing Pillar Jib Cranes 67
NUM-III-5100-3 Mast-Type Jib Cranes 68
NUM-III-5422-1 Slew Drive Motor-Size Selection 69
NUM-III-6100-1 Monorail System 72
NUM-III-6100-2 Two-Way Switches 72
NUM-III-6100-3 Three-Way Switches 72
NUM-III-6100-4 Cross-Track Switches 72
NUM-III-6100-5 Interlocking Mechanisms 73
NUM-III-6100-6 Lift/Drop Sections 73
NUM-III-7100-1 Electric Wire-Rope Hoist 78
NUM-III-7100-2 Hand-Chain Hoist 78
NUM-III-7100-3 Electric-Chain Hoist 78
NUM-III-7100-4 Air-Operated Wire-Rope Hoist 79
NUM-III-7100-5 Air-Operated Chain Hoist 79
NUM-III-7100-6 Under-Running Trolley 79
NUM-III-7210-1 Electric Wire-Rope Hoist, Suspension Types 81
NUM-III-7310-1 Hand-Chain Hoist, Suspension Types 82
NUM-III-7410-1 Electric-Chain Hoist, Suspension Types 82
NUM-III-7510-1 Air-Operated Wire-Rope Hoist, Suspension Types 84
NUM-III-7610-1 Air-Operated Chain Hoist, Suspension Types 85
NUM-III-7942.3-1 Single and Double Reeving 89
NUM-III-8212.2-1 Wheel-Skewing Forces (From CMAA 74) 97
NUM-III-8214-1 Runway Alignment Tolerance for Patent Track 99
NUM-III-8214-2 Runway Alignment Tolerance 100
NUM-III-8232.3-1 Local Bending of Flanges Due to Wheel Loads 104
NUM-III-8234.1-1 Joint Configuration (From CMAA 74) 112
NUM-III-8344.1-1 Bridge Span (From CMAA 74) 118
NUM-III-8425.1-1 Arrangement of Pendant Push-Button Controllers 129
NUM-III-8425.2-1 Arrangement of Cab Master-Switch Controllers 131
NUM-III-8425.3-1 Arrangement of Radio-Transmitter Lever-Switch Controllers 132
NUM-III-8427.2-1 Various Styles of Conductor System Types 133

Tables

NUM-G-3210-1 Service Classes for Cranes and Monorails 5
NUM-G-3220-1 Service Classes for Electrically Operated Hoists 6
NUM-G-3230-1 Service Classes for Air Wire-Rope and Air Chain Hoists 7
NUM-I-1100-1 Major Design Differences Between Type IA and IB 20
NUM-I-8210 Reference Properties of Acceptable Materials for Structural Components 31
NUM-I-8521-1A Required Inspections or Tests (Type IA) 33
NUM-I-8521-1B Required Inspections or Tests (Type IB) 35
NUM-II-8215.3-1 Boundary Conditions for Wheel-to-Rail Interface 44
NUM-III-7942.1-1 Minimum Pitch Diameter of Running Sheaves 88
NUM-III-7942.2-1 Minimum Pitch Diameter of Drums 88
NUM-III-7944.1-1 Bearing Life Expectancy 90
NUM-III-7945-1 Hoist Service Factor, C_d 90
NUM-III-7945-2 Hoist Service Factor, S_f 91
NUM-III-7952-1 Standard Rated Motor Voltages 93

Copyright ASME International
Provided by IHS under license with ASME
No reproduction or networking permitted without license from IHS
Not for Resale

NUM-III-8212.1-1 Dead Load Factor, *DLF* 96
NUM-III-8213-1 Load Designations 98
NUM-III-8231.1-1 Allowable Stresses (Members Not Controlled by Buckling) 101
NUM-III-8231.2-1 Modifying Coefficient, *N* 101
NUM-III-8231.5-1 Bolt Allowable Stresses 102
NUM-III-8232.4-1 Bolt Shear and Tension Factor, *R* 106
NUM-III-8234.1-1 Allowable Stress Ranges 107
NUM-III-8234.1-2 Fatigue Stress Provisions — Tension (T) or Reversal (REV) Stresses 108
NUM-III-8341.2-1 Machinery Service Factor, C_d 115
NUM-III-8341.2-2 Crane Service Factor, S_f 115
NUM-III-8342-1 AFBMA L-10 Bearing Life 115
NUM-III-8343.5-1 Crane Class Factor, K_c 117
NUM-III-8343.5-2 Surface Condition Factor, K_{sc} 117
NUM-III-8344.1-1 Bridge Load Factor, K_{bw} 119
NUM-III-8344.1-2 Speed Factor, C_s 119
NUM-III-8344.1-3 Wheel Service Factor, S_m, and Minimum Load Service Factor, K_{wl} 119
NUM-III-8344.1-4 Bridge Wheel Loadings, lb; *P*; *KDW* 120
NUM-III-8344.2-1 Maximum Wheel Loads/I-Beams and Wide Flange Beams 121
NUM-III-8421.4-1 AC Contactor Ratings for AC-Wound Rotor Motors 123
NUM-III-8421.4-2 AC Contactor Ratings for AC Squirrel-Cage Motors (Maximum Intermittent Horsepower Rating) 123
NUM-III-8421.4-3 DC Contactor Ratings for DC Motors (230 to 250 Volts DC) 123
NUM-III-8421.4-4 AC Contactor Ratings for Mainline Service 124
NUM-III-8421.4-5 DC Contactor Ratings for Mainline Service (230 to 250 Volts DC) 124
NUM-III-8421.5-1 NEMA Resistor Classification 124
NUM-III-8422.2-1 Standard Rated Motor Voltages 125
NUM-III-8422.4-1 Standard Values for Friction Factor, *f* 126
NUM-III-8422.4-2 Standard Maximum Acceleration Rate to Prevent Wheel Skidding 126
NUM-III-8422.4-3 Standard Bridge Motion Acceleration Rates 126
NUM-III-8422.4-4 Mechanical Efficiency, *E*, of Drive Machinery 127
NUM-III-8422.4-5 Standard Values of Accelerating Torque Factor, K_t 128

Mandatory Appendix

IV SI Conversion Factors 139

Nonmandatory Appendices

A 141

B 150

Copyright ASME International
Provided by IHS under license with ASME
No reproduction or networking permitted without license from IHS
Not for Resale

FOREWORD

The Committee on Cranes for Nuclear Power Plants was first established in 1976. In 1980, the scope of the Committee was revised, and its name was changed to the Committee on Cranes for Nuclear Facilities. In 1983, the Nuclear Underhung and Monorail (NUM) Subcommittee was established to develop a standard to cover the design, fabrication, installation, and testing of underhung and monorail equipment used in nuclear facilities. The NUM-1 Standard is the result of the Subcommittee's work.

The first edition of ASME NUM-1 was approved by the American National Standards Institute on October 28, 1996. The second edition of ASME NUM-1 was approved by the American National Standards Institute on May 3, 2000.

This Standard, or portions thereof, can be applied to cranes, monorails, and hoists at facilities other than nuclear, where enhanced equipment safety may be required, and can be provided by means of either single failure-proof features, enhanced safety features, or a seismic design.

This Standard is split into four major sections: NUM-G, General Specifications, applicable to all equipment; NUM-I, Type I equipment (i.e., equipment that is used to handle critical loads and is required to withstand a seismic event; NUM-II, Type II equipment (i.e., equipment that is not used to handle critical loads and is required to withstand a seismic event); and NUM-III, Type III equipment (i.e., equipment that is not used to handle critical loads and is not required to withstand a seismic event). A detailed Contents precedes each major section.

Suggestions for the improvement of this Standard are welcome. They should be addressed to the Secretary, ASME Committee on Cranes for Nuclear Facilities, The American Society of Mechanical Engineers, Three Park Avenue, New York, NY 10016-5990.

The 2004 edition of ASME NUM-1 was approved by the American National Standards Institute on August 17, 2004.

Copyright ASME International
Provided by IHS under license with ASME
No reproduction or networking permitted without license from IHS
Not for Resale

ASME STANDARDS COMMITTEE ON CRANES FOR NUCLEAR FACILITIES

(The following is the roster of the Committee at the time of approval of this Standard.)

OFFICERS

B. P. Lytle, *Chair*
S. N. Parkhurst, *Vice Chair*
S. Burke, *Secretary*

COMMITTEE PERSONNEL

S. Burke, The American Society of Mechanical Engineers
M. B. Fitzsimmons, Rochester Gas and Electric Corp.
J. N. Fowler, Entergy Nuclear South
L. D. Jones, NASA Kennedy Space Center
A. S. Kureck, Electromotive Systems, a Magnetek Co.
I. X. Lissy, Navy Crane Center
B. P. Lytle, NASA Kennedy Space Center
R. E. McCoy, Bechtel Bettis, Inc.
J. E. Nelson, Ederer, LLC
R. O. Osborn, Jr., BWXT
S. N. Parkhurst, Material Handling Equipment, Inc.
R. J. Parler, Framatome ANP
R. Pope, Fluor Federal Services
B. E. Thomas, US Nuclear Regulatory Commission
G. A. Townes, BE Inc.
T. V. Vine, NMC
J. L. Weamer, Bechtel National, Inc.
D. P. Weber, Par Systems

SUBCOMMITTEE ON NUCLEAR UNDERHUNG AND MONORAIL CRANES

J. E. Nelson, *Chair,* Ederer, LLC
L. D. Jones, NASA Kennedy Space Center
A. S. Kureck, Electromotive Systems, a Magnetek Co.
I. X. Lissy, Navy Crane Center
B. P. Lytle, NASA Kennedy Space Center
R. E. McCoy, Bechtel Bettis, Inc.
R. O. Osborn, Jr., BWXT
S. N. Parkhurst, Material Handling Equipment, Inc.
R. J. Parler, Framatome ANP
R. Pope, Fluor Federal Services
R. R. Reisinger, FKI Industries, Inc.
D. T. Tang, US Nuclear Regulatory Commission
T. V. Vine, NMC
J. L. Weamer, Bechtel National, Inc.
D. P. Weber, Par Systems

--`,,```,,,,````-`-`,,`,,`,`,,`---

Copyright ASME International
Provided by IHS under license with ASME
No reproduction or networking permitted without license from IHS

Not for Resale

SUBCOMMITTEE ON NUCLEAR OVERHEAD AND GANTRY CRANES

G. A. Townes, *Chair,* BE Inc.
D. M. Beilfuss, Electromotive Systems, a Magnetek Co.
M. B. Fitzsimmons, Rochester Gas and Electric Corp.
W. A. Horwath, Whiting Corp.
L. D. Jones, NASA Kennedy Space Center
I. X. Lissy, Navy Crane Center
B. P. Lytle, NASA Kennedy Space Center
R. O. Osborn, Jr., BWXT
S. N. Parkhurst, Material Handling Equipment, Inc.
R. Parler, Framatome ANP
R. Pope, Fluor Federal Services
B. E. Thomas, US Nuclear Regulatory Commission
T. V. Vine, NMC
J. L. Weamer, Bechtel National, Inc.
D. P. Weber, Par Systems

Copyright ASME International
Provided by IHS under license with ASME
No reproduction or networking permitted without license from IHS
Not for Resale

PREPARATION OF TECHNICAL INQUIRIES TO THE COMMITTEE ON CRANES FOR NUCLEAR FACILITIES

INTRODUCTION

The ASME Committee on Cranes for Nuclear Facilities (CNF) will consider written requests for interpretations and revisions to CNF Standards and develop new requirements if dictated by technological development. The Committee's activities in this regard are limited strictly to interpretations of the requirements or to consideration of revisions to the present Standard on the basis of new data or technology. As a matter of published policy, ASME does not "approve," "certify," "rate," or "endorse" any item, construction, proprietary device, or activity and, accordingly, inquiries requiring such consideration will be returned. Moreover, ASME does not act as a consultant on specific engineering problems or on the general application or understanding of the Standard requirements. If, based on the inquiry information submitted, it is the opinion of the Committee that the inquirer should seek assistance, the inquiry will be returned with the recommendation that such asistance be obtained.

All inquiries that do not provide the information needed for the Committee's full understanding will be returned.

INQUIRY FORMAT

Inquiries shall be limited strictly to interpretations of the requirements or to the consideration of revisions to the present Standard on the basis of new data or technology.

Inquiries shall be submitted in the following format.

(a) Scope. The inquiry shall involve a single requirement or closely related requirements. An inquiry letter concerning unrelated subjects will be returned.

(b) Background. State the purpose of the inquiry, which would be either to obtain an interpretation of the Standard or to propose consideration of a revision to the present Standard. Provide concisely the information needed for the Committee's understanding of the inquiry, being sure to include reference to the applicable Standard, Edition, Addenda, Requirements, Parts, Subparts, Appendices, paragraphs, figures and tables. If sketches are provided, they shall be limited to the scope of the inquiry.

(c) Inquiry Structure

(1) Proposed Question(s). The inquiry shall be stated in a condensed and precise question format, omitting superfluous background information and, where appropriate, composed in such a way that "yes" or "no" (perhaps with provisos) would be an acceptable reply. The inquiry statement should be technically and editorially correct.

(2) Proposed Reply(ies). State what it is believed that the Standard requires. If in the inquirer's opinion, a revision to the Standard is needed, recommended wording shall be provided.

(d) Submittal. The inquiry shall be submitted in typewritten form; however, legible, handwritten inquiries will be considered. It shall include the name and mailing address and telephone number of the inquirer and be mailed to the following address:

Secretary
ASME Committee on Cranes for Nuclear Facilities
Nuclear Department
Three Park Avenue
New York, NY 10016-5990

Copyright ASME International
Provided by IHS under license with ASME
No reproduction or networking permitted without license from IHS
Not for Resale

ASME NUM-1-2004

Following approval by the ASME Committee on Cranes for Nuclear Facilities and ASME, and after public review, ASME NUM-1-2004 was approved by the American National Standards Institute on August 17, 2004.

SUMMARY OF CHANGES

The 2004 Edition of ASME NUM-1 includes revisions, additions, deletions, corrections, and editorial changes introduced in NUM-1a-2002 and NUM-1b-2002, as well as the following changes identified by a margin note, **(04)**, placed next to the affected areas.

Page	*Location*	*Change*
3	NUM-G-2900	Added
13, 15	NUM-G-6100	Definitions for *load hangup* and *two-blocking* added
16, 17	NUM-G-7100	Revised in its entirety
20	Table NUM-I-1100-1	Last entry added
23, 24	NUM-I-7930(e)	Added
	NUM-I-7942(a)	Revised in its entirety
37, 38	NUM-I-8532.1(c)	Added
	NUM-I-8582.1(e)	Added
44	Table NUM-II-8215.3-1	In second column, fifth entry, ''Fixed'' corrected to read ''Free''
87	NUM-III-7942(a)	Revised
	NUM-III-7942(b)	Revised
97	NUM-III-8212.3(a)	Reference revised
101	NUM-III-8231.2	(1) In Eq. (14), denominator in last parenthetical fraction revised (2) Nomenclature revised (3) Introductory paragraph to Eq. (15) revised
106, 107	NUM-III-8233.2	Added
	NUM-III-8233.3	Added
	NUM-III-8233.4	Added
	NUM-III-8233.5	Added
	NUM-III-8233.6	Added
114, 115	NUM-III-8341.2(a)	Reference updated
	NUM-III-8341.3	Reference updated

--`,,```,,,,````-`-`,,`,,`,`,,`---

Copyright ASME International
Provided by IHS under license with ASME
No reproduction or networking permitted without license from IHS

Not for Resale

Section NUM-G-1000
Introduction

NUM-G-1100 GENERAL

(a) This Standard is split into four major sections:

(1) NUM-G: General Specifications, applicable to all equipment.

(2) NUM-I: Type I equipment, i.e., equipment that is used to handle critical loads and is required to withstand a seismic event. (See Section NUM-G-6000.)

(3) NUM-II: Type II equipment, i.e.. equipment that is not used to handle critical loads and is required to withstand a seismic event. (See Section NUM-G-6000.)

(4) NUM-III: Type III equipment, i.e., equipment that is not used to handle critical loads and is not required to withstand a seismic event. (See Section NUM-G-6000.)

(b) Equipment covered under this Standard shall be designed in accordance with the Standard's requirements, but not necessarily with its recommendations. The word "shall" is used to denote a requirement, the word "should" is used to denote a recommendation, and the word "may" is used to denote permission, which is neither a requirement nor recommendation.

NUM-G-1200 SCOPE

This Standard covers underhung cranes, top-running bridge and gantry cranes with underhung trolleys, traveling wall cranes, jib cranes, monorail systems, overhead hoists, and hoists with integral trolleys used in nuclear facilities. All of the above cranes, whether single or multiple girder, are covered by this Standard with the exception of multiple girder cranes with both top running bridge and trolley, which are covered by ASME NOG-1.

NUM-G-1300 APPLICATIONS

This Section of the Standard applies to the design, manufacture, testing, inspection, shipment, storage, and erection of the cranes, hoists, and monorails covered by this Standard.

NUM-G-1400 RESPONSIBILITY

The equipment covered by this Standard is classified into three types (see Section NUM-G-6000, equipment Types I, II, and III), depending on the equipment location and usage of the equipment at a nuclear facility.

The owner shall be responsible for determining and specifying the equipment type. The owner shall also be responsible for determining and specifying the environmental conditions of service, performance requirements, type, and category of coatings and finishes, and degree of quality assurance.

Determining the extent to which this Standard can be used, either in part or in its entirety, at other than nuclear facilities, shall be the responsibility of those referencing the use of the Standard.

Copyright ASME International
Provided by IHS under license with ASME
No reproduction or networking permitted without license from IHS
Not for Resale

Section NUM-G-2000
Environmental Conditions of Service

NUM-G-2100 GENERAL

The owner shall specify environmental conditions for operation and storage. This equipment shall be designed to withstand the effects of the conditions specified herein. Where the ability of the equipment to withstand the effects is unknown, or limited, the manufacturer shall specify such limitations and their basis, for acceptance by the owner, prior to order.

NUM-G-2200 RADIATION

(a) The owner shall specify the accumulated radiation dosage expected to be seen by the crane, hoist, or monorail, over the life of the nuclear facility.

(b) Components whose normal life could be reduced by the effects of the specified radiation shall be tabulated and submitted to the owner.

(c) Components of equipment whose failure due to specified radiation could result in loss of load shall either be designed to withstand the specified radiation or shall have a specific replacement period. Where state of the art is such that sufficient data is not available, periodic inspections shall be made by the owner to determine when replacement should be made. The inspection requirements and their bases are to be specified by the manufacturer and provided to the owner.

NUM-G-2300 TEMPERATURE

(a) The owner shall specify the following temperature requirements in the area where the crane, hoist, or monorail operates:

(1) maximum operating temperature;

(2) minimum operating temperature;

(3) ambient temperature for motors;

(4) maximum construction temperature; and

(5) minimum construction temperature.

(b) The crane, hoist, or monorail shall be designed to withstand the effects of the specified temperatures, or the limitation of the equipment's design concerning these temperature conditions shall be specified by the manufacturer. The inspection requirements and their bases are to be specified by the manufacturer and provided to the owner.

NUM-G-2400 PRESSURE

(a) The owner shall specify the following pressure requirements in the area where the crane, hoist, or monorail operates:

(1) normal operating pressure; and

(2) any test or abnormal event pressures including the rate of change of pressures.

(b) The crane, hoist, or monorail shall be designed to withstand the effects of the specified pressures, or the limitations of the equipment's design concerning these pressure conditions shall be specified by the manufacturer. Specifically where there are changes in pressure, enclosures shall be vented. The inspection requirements and their bases are to be specified by the manufacturer and provided to the owner.

NUM-G-2500 HUMIDITY

(a) The owner shall specify the humidity conditions in the area where the crane, hoist, or monorail operates.

(b) Either the crane, hoist, or monorail shall be designed to withstand the effects of the specified humidity, or the limitations of the equipment's design concerning the humidity condition shall be specified by the manufacturer. The inspection requirements and their bases are to be specified by the manufacturer and provided to the owner.

NUM-G-2600 CHEMICAL

(a) Spray Systems

(1) If the crane, hoist, or monorail may be subject to any spray systems, then the chemistry of the spray shall be specified by the owner. Any restrictions on the use of materials due to the effects of the spray shall also be specified. Specifically, where a corrosive spray is present the possibility of hydrogen generation exists, and, therefore, the use of exposed aluminum,

--`,,```,,,,````-`-`,,`,,`,`,,`---

Copyright ASME International
Provided by IHS under license with ASME
No reproduction or networking permitted without license from IHS

Not for Resale

magnesium, galvanized steel, and zinc is to be minimized. If these materials are used, the amounts and location shall be provided to the owner.

(2) The crane, hoist, or monorail shall be designed to withstand the effects of the specified spray, and shall not use the specified restricted materials. Any limitations of the design concerning the spray condition and the use of any restricted materials shall be specified by the manufacturer prior to the manufacture of the equipment. The inspection requirements and their bases are to be specified by the manufacturer and provided to the owner.

(b) Liquid Immersion

(1) If the hoist load block and wire rope are to be immersed in a liquid, then the owner should identify the immersion liquid and the manufacturer should select the lubricants and component materials that are compatible with the immersion liquid. Compatibilities between lubricants used in the manufacture of wire rope and the immersion liquid should also be addressed. Design requirements should address liquid entrapment in components such as sealed bearings, load blocks, and the wire rope to prevent degradation of lubricants and to protect the components from corrosion.

(2) Load blocks and wire ropes that are to be immersed shall be lubricated with a lubricant that meets the specified lubrication requirements. Any limitations of the equipment design concerning the pool chemistry and lubrication requirements shall be specified by the manufacturer. The inspection requirements and their bases are to be specified by the manufacturer and provided to the owner.

NUM-G-2700 WIND

The crane, hoist, or monorail shall be designed to operate under any specified "operating wind" conditions, and shall be designed to withstand the effects, in a nonoperating secured position, under any specified "stored" or "tornado wind" conditions.

NUM-G-2800 SEISMIC

(a) The owner shall specify the Safe Shutdown Earthquake (SSE) parameters for Type I and Type II equipment.

(b) As specified under the NUM-I and NUM-II sections of this document, Type I and Type II equipment shall be designed to withstand the effects of the specified seismic conditions.

(c) Seismic design for Type III equipment is not required unless specified by the owner.

NUM-G-2900 DRAINAGE (04)

Box sections, when required by environmental conditions, shall be drained to prevent moisture from accumulating. Where internal full depth diaphragms extend from the top flange to the bottom flange, the compartment formed by a pair of diaphragms shall be drained. Holes shall be provided in the bottom flange of the box girder for draining the whole box girder of each compartment formed by the diaphragms.

Copyright ASME International
Provided by IHS under license with ASME
No reproduction or networking permitted without license from IHS
Not for Resale

Section NUM-G-3000
Performance Requirements

NUM-G-3100 GENERAL

(a) Individual performance requirements for equipment are addressed in each section for the various types of equipment. General and common requirements are covered in this Section. These requirements may be supplemented by the owner to define the special performance requirements of the given nuclear facility, as applicable.

(b) The owner shall specify the service class, capacity, speeds, and dimensional requirements.

NUM-G-3200 SERVICE CLASS

The owner shall specify the applicable crane, monorail, and hoist service class as determined necessary to meet the application. The owner shall state any specific requirements deviating from the selected service class description. See NUM-B-1000 regarding service class.

NUM-G-3210 Crane and Monorail Service Class

Service classes for cranes and monorails, excluding the hoist and hoists with integral trolley, are given in Table NUM-G-3210-1.

NUM-G-3220 Electrically Operated Hoist Service Class

Service classes for electric hoists and electric hoists with integral trolleys are given in Table NUM-G-3220-1.

NUM-G-3230 Air-Operated Hoist Service Class

Service classes for air-operated, air-powered hoists and air-operated integral trolleys are given in Table NUM-G-3230-1.

NUM-G-3300 CAPACITY

(a) The capacity of the equipment is defined as the maximum rated load that the equipment handles. This capacity shall be specified by the owner.

(b) In the case where more than one trolley hoist will or may operate on a crane bridge or monorail, then the crane bridge or monorail shall be specified to handle the most severe loading conditions.

NUM-G-3400 SPEEDS

(a) The operational speeds of the crane, trolley, and hoist shall be specified by the owner. These speeds depend on the nature of the load, load clearances, weight of load, position of the operator, load positioning accuracy, and type of drive. Speeds are for rated load conditions and shall be such as to allow for controlled handling of the equipment and the load.

(b) Suggested operating speeds are provided in NUM-B-2000.

NUM-G-3500 OTHER CONSIDERATIONS

The owner shall determine if true vertical lift is required.

Copyright ASME International
Provided by IHS under license with ASME
No reproduction or networking permitted without license from IHS
Not for Resale

Table NUM-G-3210-1 Service Classes for Cranes and Monorails

Crane and Monorail Class	Service Class	Service Conditions
A	Infrequent or standby	This service class covers cranes and monorails that may be used in installations where precise handling of equipment at slow speeds, with long idle periods between lifts, is required. Capacity loads may be handled for initial installation of equipment and for infrequent maintenance.
B	Light	This service class covers cranes and monorails that may be used where service requirements are light and the speed is slow. Loads may vary from no load to occasional full-rated loads with 2 to 5 lifts per hr, averaging 10 ft per lift.
C	Moderate	This service class covers cranes and monorails that may be used where service requirements are moderate. In this type of service, the crane will handle loads that average 50% of the rated capacity with 5 to 10 lifts per hr, averaging 15 ft, with not more than 50% of the lifts at rated capacity.
D	Heavy	This service class covers cranes and monorails that may be used where heavy-duty production is required. In this type of service, loads approaching 50% of the rated capacity will be handled constantly during the working period. High speeds are desirable for this type of service with 10 to 20 lifts per hr, averaging 15 ft, with not more than 65% of the lifts at rated capacity.
E	Severe	This type of service requires a crane or monorail capable of handling loads approaching rated capacity throughout its life, with 20 or more lifts per hr at or near the rated capacity.
F	Continuous severe	This type of service requires a crane or monorail capable of handling loads approaching rated capacity continuously under severe service conditions throughout its life. Applications may include custom-designed specialty cranes essential to performing the critical work tasks affecting the total production facility. These cranes must provide the highest reliability, with special attention paid to ease of maintenance features.

--`,,```,,,,````-`-`,,`,,`,`,,`---

Copyright ASME International
Provided by IHS under license with ASME
No reproduction or networking permitted without license from IHS
Not for Resale

Table NUM-G-3220-1 Service Classes for Electrically Operated Hoists

		Operational Time Ratings at $K = 0.65$			
		Uniformly Distributed Work Periods		Infrequent Work Periods	
Hoist Duty Class	Service Conditions	Max. ON Time, min/hr	Max. Number of Starts, per hr	Max. ON Time From Cold Start, min	Max. Number of Starts, per hr
H1	Hoists used primarily to install and service heavy equipment, where loads frequently approach rated load, and where the hoist is idle for 1- to 6-month periods between periods of operation.	7.5 (12.5%)	75	15	100
H2	Loads and utilization randomly distributed. Rated loads infrequently handled. Total running time not over 12.5% of the work period.	7.5 (12.5%)	75	15	100
H3	Loads and utilization randomly distributed. Total running time not over 25% of the work period.	15 (25%)	150	30	200
H4	High-volume handling of heavy loads, frequently near rated load, with total running time not over 50% of the work period. Manual or automatic cycling operations of lighter loads, with rated loads infrequently handled, with total running time frequently 50% of the work period.	30 (50%)	300	30	300
H5	Duty cycles approaching continuous operations are frequently necessary. User must specify exact details of operation, including weight of attachments.	60 (100%)	600	N/A [Note (1)]	N/A [Note (1)]

NOTE:
(1) N/A = Not applicable since there are no infrequent work periods in class H5 service.

Copyright ASME International
Provided by IHS under license with ASME
No reproduction or networking permitted without license from IHS Not for Resale

Table NUM-G-3230-1 Service Classes for Air Wire-Rope and Air Chain Hoists

Hoist Duty Class	Description
A4	Loads normally less than 50% of rated load with running time up to continuous or Loads normally above 50% of rated load with running time up to 50% of work period.
A5	Loads normally above 50% of rated load with running time above 50% of work period.

Copyright ASME International
Provided by IHS under license with ASME
No reproduction or networking permitted without license from IHS
Not for Resale

Section NUM-G-4000
Coatings and Finishes

NUM-G-4100 COATING SERVICE LEVELS

The owner shall specify either coating service Level I or II as defined below.

(a) Coating Service Level I. For use in areas where coating failure could adversely affect the operation of post-accident fluid systems and, thereby, impair safe shutdown. With few exceptions, coating service Level I applies to coatings inside a nuclear power plant's primary containment.

(b) Coating Service Level II. For use in areas where coating failure could impair, but not prevent, normal operating performance. The function of coating service Level II coatings is to provide corrosion protection and decontaminability in those areas outside primary containment subject to radiation exposure and radionuclide contamination. Coating service Level II also applies to coatings in nonradiation areas.

NUM-G-4200 SPECIFIC REQUIREMENTS FOR COATING SERVICE LEVELS

NUM-G-4210 Requirements for Coating Service Level I

(a) Coating requirements for coating service Level I shall be in accordance with ASTM D 5144, Standard Guide for Use of Protective Coating Standards in Nuclear Power Plants.

(b) In accordance with ASTM D 5144, coating service Level I requires a quality assurance program.

(c) Inspection and testing of coatings for coating service Level I shall be in accordance with ASTM D 5144. Specific coating inspections shall be specified by the owner, dependent upon the coating system being used. See ASTM D 5161, Standard Guide for Specifying Inspection Requirements for Coating and Lining Work (Metal Substrates), for selecting and specifying the appropriate inspection requirements.

NUM-G-4220 Requirements for Coating Service Level II

(a) Coating requirements for coating service Level II shall be as specified by the owner. The owner may invoke applicable sections of ASTM D 5144, Standard Guide for Use of Protective Coating Standards in Nuclear Power Plants.

(b) Quality assurance requirements for coating service Level II shall only apply as specified by the owner.

(c) Inspection and testing requirements for coating service Level II shall only apply as specified by the owner.

NUM-G-4230 Additional Requirements Applicable to All Coatings

Additional requirements for coatings and finishes are listed in (a) through (o) below. Further information for coatings and finishes is provided in Nonmandatory Appendix NUM-B, NUM-B-3000.

(a) If not specified by the owner, the type of coating will be determined by the manufacturer to meet the specified environmental conditions of service and coating service level. Specifically, the selected coatings shall be suitable for any specified radiation, temperature, and chemical immersion or chemical spray environment.

(b) Welding through coatings shall not be allowed unless the coating system is specifically designed and formulated as a weldable system and documentation can be provided by the coating manufacturer to attest to this capability. The use of these coatings shall be approved by the owner.

(c) Surfaces exposed to the environment, but inaccessible after assembly, such as wheel wells and hubs, shall be coated prior to assembly.

(d) Coating of interior or enclosed surfaces of the equipment, such as inside a welded box section, is not required by this Standard.

(e) Contact surfaces of friction-type joints to be joined by high-strength bolts shall not be coated with specified coating system except for organic or inorganic zinc coating systems not prohibited by NUM-G-2600.

(f) Machined mating surfaces and other surfaces not normally protected by the specified coating system, such as hooks, hook nuts, wheel treads, rails, gears,

Copyright ASME International
Provided by IHS under license with ASME
No reproduction or networking permitted without license from IHS
Not for Resale

shafts, pinions, couplings, drum grooves, sheave grooves, and brake wheels, shall be protected by means of an appropriate preservative for shipment and/or storage. The manufacturer shall specify which preservatives must be removed by the owner for proper operation of the equipment. Other preservatives may be removed by the owner after installation of the equipment.

(g) Forced curing or drying of the coating system shall not be performed unless recommended by the coating manufacturer.

(h) Fillers, sealants, and caulking compounds shall be compatible with the coating system.

(i) Finished components (such as motors, brakes, gear reducers, limit switches, electrical dials and gauges, control enclosures, brake rectifier cabinets, control masters, safety switches, auxiliary heaters, push-button stations, transformers, manual magnetic disconnects, light fixtures, reactors, resistor banks, protective guards, cross-shaft bearing blocks, unitized hoists, interior of control cabinets, festoon trolley cable spacer systems cab interiors, and radio control equipment) may be furnished with conventional coatings unless otherwise specified by the owner.

(j) For coating service Level I applications, the equipment manufacturer shall supply the estimated surface area of exposed parts provided with conventional coatings.

(k) Nameplates and warning labels of factory finished components that are recoated shall be masked to preserve legibility.

(l) Items such as fasteners and conduits shall be supplied with the specified coating system, galvanized, or plating. Galvanizing or plating shall be subject to the requirements of NUM-G-2600. When specifically requested by the owner, a list of galvanized or plated parts shall be provided by the equipment manufacturer.

(m) Surface contaminants, such as grease and oil, detected after blasting shall be removed to produce the surface conditions required by the appropriate Steel Structures Painting Council (SSPC) surface preparation requirement.

(n) If there is visible deterioration of the surface beyond the specified SSPC preparation, repreparation of the surface shall be required.

(o) Preparation of surfaces shall be accomplished by the methods originally used, except that small areas requiring repair or touchup where conventional blasting is not desirable may be reprepared by one of the following methods. These methods are listed in descending order of effectiveness.

(1) Vacuum blasting to clean an abrasive finish with a minimum 2.0 mil profile; the minimum blasting air pressure shall be 50 psi at the blasting nozzle.

(2) Power tool cleaning using grinding wheels, sanding discs, or other devices to provide a minimum 2 mil profile in accordance with SSPC SP-3; the use of a needle gun to roughen the surface after grinding is recommended.

(3) Hand sanding to obtain as clean a surface as possible in accordance with SSPC SP-2; or wire brushing in accordance with SSPC SP-2.

Copyright ASME International
Provided by IHS under license with ASME
No reproduction or networking permitted without license from IHS Not for Resale

Section NUM-G-5000
Quality Assurance

NUM-G-5100 REQUIREMENTS

NUM-G-5110 Type I and Type II Equipment

(a) The quality assurance program of the manufacturer of Type I or Type II equipment shall meet ASME NQA-1, or shall meet the quality assurance requirements specified by the owner.

(b) A specific quality assurance program for manufacturers of mechanical and electrical components for Type II equipment is not required unless specified by the owner.

(c) A specific quality assurance program for suppliers of Type II equipment structural components that are not listed in NUM-II-8500 is not required unless specified by the owner.

(d) A specific quality assurance program for suppliers of Type I equipment structural, mechanical, and electrical components that are not listed in NUM-I-8500 is not required unless specified by the owner.

NUM-G-5120 Type III Equipment

A specific quality assurance program for manufacturers of Type III equipment is not required unless specified by the owner.

NUM-G-5200 DOCUMENTATION

The owner shall define, in its purchase documents, the requirements for the collection, storage, and maintenance of documentation applicable to procurement, design, manufacture, shipment, receipt, storage, installation, and startup of cranes covered by this Standard. Guidance for determining documentation requirements to be specified in the owner's purchase documents is provided in Seciton NUM-B, Nonmandatory Appendix.

(a) As a minimum, design and manufacturing documentation to be specified in the owner's purchase documents for all cranes shall include the following:

(1) assembly and outline drawings;

(2) electrical schematics and wiring diagrams;

(3) acceptance test plans and procedures;

(4) software test plans for controls;

(5) operating instructions;

(6) maintenance instructions; and

(7) software programs.

(b) Minimum installation documentation for all cranes shall include the following:

(1) records of high strength bolt torquing;

(2) data sheets or logs on equipment installation inspection and alignment;

(3) lubrication records;

(4) documentation of testing performed after installation and prior to equipment acceptance;

(5) results of end-to-end electrical tests;

(6) final system adjustment data;

(7) acceptance test procedures and results; and

(8) load test.

Additionally, for Type I and II cranes, system calculations and load summary reports shall be included.

The owner's quality assurance program shall define which of these quality assurance documents are permanent records.

--`,,```,,,,````-`-`,,`,,`,`,,`---

Copyright ASME International
Provided by IHS under license with ASME
No reproduction or networking permitted without license from IHS

Not for Resale

Section NUM-G-6000
Definitions

NUM-G-6100 DEFINITIONS

abnormal operating conditions: environmental conditions that are unfavorable, harmful, or detrimental to or for the operation of the crane trolley (carrier) or hoist, such as excessively high or low ambient temperatures, exposure to weather, corrosive fumes, dust-laden or moisture-laden atmospheres, and hazardous locations.

acceptance criteria: specified limits placed on characteristics of an item, process, or service defined in codes, standards, or other required documents.

ampacity: the current-carrying capacity expressed in amperes.

auxiliary girder (outrigger): a girder arranged parallel to the main girder for supporting the platform motor base, operator's cab, control panels, etc., to reduce the torsional forces such load would otherwise impose on the main girder.

brake: a device, other than a motor, used for retarding or stopping motion, or holding in a rest position.

brake, drag: a friction brake that provides a continuous retarding force having no external control.

brake, holding: a brake that automatically prevents motion when power is off.

brake, mechanical load: an automatic type of friction brake used for controlling loads in a lowering direction. This unidirectional device requires torque from the motor to lower a load but does not impose any additional load on the motor when hoisting a load.

brake, mechanical load (manual chain hoist): an automatic type of brake used for holding and controlling the descent of loads. This unidirectional device requires a force applied to the hand chain to lower the load but does not impose additional hand-chain pull when lifting the load.

brake, parking: a brake for bridge and trolley that may be automatically or manually applied in an attempt to prevent horizontal motion by restraining wheel rotation.

braking, dynamic: a method of controlling speed by using the motor as a generator, with the energy being dissipated in resistors.

braking, eddy current: a method of controlling or reducing speed by means of an electrical induction load brake.

braking means, control: a method of controlling speed by removing energy from the moving body or by imparting energy in the opposite direction.

camber: the slight upward vertical curve given to bridge and/or runway girders to compensate partially for deflection due to hook load and weight of the crane.

cantilever frame: a structural member that supports the trolley of a wall crane.

capacity: the maximum rated load that an item of lifting equipment is designed to handle.

carrier: see *trolley*.

certification: the act of determining, verifying, and attesting in writing to the qualifications of personnel, processes, procedures, or items in accordance with specified requirements.

clearance: distance from any part of the crane to a point of the nearest fixed obstruction.

controller, spring-return (dead man): a controller that, when released, will return automatically to a neutral position.

countertorque: see *plugging*.

crane: a machine for lifting and lowering a load and moving it horizontally. Cranes, whether fixed or mobile, are driven manually or by power, or by a combination of both.

crane, gantry: a crane similar to an overhead crane, except that the bridge for carrying the trolley or trolleys is supported on two or more legs running on fixed rails or other runway.

Copyright ASME International
Provided by IHS under license with ASME
No reproduction or networking permitted without license from IHS
Not for Resale

crane, under-running: an electric overhead traveling crane having the end trucks supported on track attached to the bottom flanges of beams or supported on the bottom flanges of the beams. These beams make up the crane runway.

cross shaft: the shaft extending across the bridge, used to transmit torque from motor to bridge drive wheels.

deflection: displacement due to bending or twisting in a vertical or lateral plane, caused by the imposed live and dead loads.

drift point: a point on a travel motion controller that releases the brake while the motor is not energized. This allows for coasting before the brake is set.

driving head: a motor-driven carrier head that is supported from and propelled by the load-bearing wheels.

drop section: a mechanism that will permit a section of track to be lowered out of alignment with a stationary track.

electric baffles: conductors that are wired to cut off electric current to approaching motor-driven equipment if switchers, etc., are not properly set for passage of equipment.

end stop: a device located at the end of the track to prevent the carrier from running off the end of the track.

end truck: the assembly consisting of the frame and wheels, which supports the crane girder or sill and allows movement along the runway.

equalizer: a device that compensates for unequal length or stretch of a rope or chain.

fork: a mechanical device for use on interlocking transfer equipment to mechanically prevent passage of a trolley or carrier when the elements are not securely locked.

gantry leg: the structural member that supports a bridge girder or end tie from the sill.

girder: the principal horizontal beam of the crane bridge, which supports the trolley and is supported by the end trucks.

hand chain: an endless loop of chain grasped by the operator to apply force required for lifting, lowering, and traveling motions.

hand-chain drop: the distance to the lowest point of the hand chain measured from a known reference.

hand-chain overhaul: the number of feet the hand chain must travel to raise the load hook one foot.

hand-chain pull: the average force measured in pounds exerted by the operator on the hoist hand chain to lift the rated load.

hand-chain wheel: a wheel with formed pockets on its periphery to allow torque to be transmitted when a force is applied to the hand chain.

hanger rod: steel rods that, together with other fittings, are used to suspend the track from the supporting structure.

hazardous locations: locations where fire or explosion hazards may exist. Locations are classified depending on the properties of the flammable vapors, liquids, or gases, or combustible dusts or fibers that may be present, and the likelihood that a flammable or combustible concentration or quantity is present.

headroom: headroom is measured with the load hook at its upper limit of travel, and is the distance from the saddle of the load hook to the following:

(a) saddle of the top hook for hook-suspended hoists,

(b) center line of the suspension holes on lug-suspended hoists,

(c) bottom of the beam on trolley-suspended hoists,

(d) supporting surface on base- and deck-mounted hoists, and

(e) uppermost point of hoist on wall- and ceiling-mounted hoists.

hoist, auxiliary: supplemental hoisting unit usually of lighter capacity and higher speed than the main hoist.

hoist, hand-chain-operated: a suspended machinery unit that, by use of hand-chain manual operation, is used for lifting or lowering a freely suspended (unguided) load.

hoist, lug-suspended: a hoist suspended from a trolley or permanent structure by means of bolt(s) or pin(s) through a rigid- or swivel-type lug.

hook approach: the minimum horizontal distance between the center of the runway rail and the hook.

hook latch: a mechanical device to close (bridge) the throat opening of a hook.

idler sprocket: a device that is free to rotate and changes the direction of the chain. This device is sometimes called idler wheel, idler sheave, pocket wheel, or chain wheel.

Copyright ASME International
Provided by IHS under license with ASME
No reproduction or networking permitted without license from IHS Not for Resale

impact allowance: additional hook load assumed to result from the dynamic effect of the rated load.

inspection: examination or measurement to verify that an item or activity conforms to specified requirements.

interlocking mechanism: a mechanical device to lock together the adjacent ends of two cranes, or a crane to a fixed transfer section or spur track, to permit the transfer of carriers from one crane or track to the other.

lift: the maximum safe vertical distance through which the hook, magnet, or bucket can move between its upper and lower limits of travel.

lift, true vertical: in true vertical lift, the load hook travels in a vertical path with no horizontal displacement between the lower limit of lift and the upper limit of lift.

lift section: a mechanism that will lift a section of track out of alignment with a stationary track.

load: the total weight superimposed on the load block, hook, or carrier.

load, credible critical: combinations of lifted loads and plant seismic events that have probabilities of occurrence equal to or more than 10^{-7} times per calendar year. The critical loads handled by the crane, and their durations of lifts, shall be used in the calculations to determine the credible critical load to be considered for the crane in the crane design load combinations that include seismic loadings. The credible critical load shall be specified by the owner.

load, critical: any lifted load whose uncontrolled movement or release could adversely affect any safety-related system when such a system is required for unit safety or could result in potential off-site exposure in excess of the limit determined by the owner.

load, live: a load that moves relative to the structure under consideration.

load, rated: the design rated load to be lifted and transported by the equipment, which by definition is not considered as the critical load including an allowance for lifting accessories that are not part of the equipment.

load, seismic lifted: the maximum lifted load under the evaluated seismic conditions where the crane or monorail structure and hoist and trolley unit must remain in place. This lifted load is not a critical load; therefore, the load itself need not be retained under the seismic event.

load, wheel: the load, without impact, on any wheel with the trolley and lifted load (rated capacity) positioned on the bridge to give maximum loading.

load block: the assembly of hook or shackle, swivel, bearing, sheaves, pins, and frame suspended by the hoisting ropes.

load-carrying part(s): any part(s) of the equipment for which the induced stress is influenced by the load on the hook.

load chain: the load suspension chain in the hoist consisting of a series of interwoven links formed and welded.

load hangup: the event in which the load block and/or load is stopped during hoisting (or traversing) by snagging or entanglement with heavy or fixed objects, creating a sudden and potentially severe overload. **(04)**

load hook: the hook used to connect the load to the hoist.

loads, dead: the loads on a structure that remain in a fixed position relative to the structure. On a crane bridge, such loads include the girders, footwalk, cross shafts, drive units, and panels.

load sprocket: a hoist component that transmits motion to the load chain. This component is sometimes called load wheel, load sheave, pocket wheel, chain wheel, or lift wheel.

load test, dynamic: a test to demonstrate the ability of hoisting equipment to safely handle its rated load by exercising the equipment through vertical and horizontal movement along its lines of travel, using a load of specific weight.

load test, proof: a physical load test, with magnitude to be as specified and always in excess of the design load.

L-10 bearing life: the L-10 bearing life of an anti-friction bearing is the minimum expected life, in hours, of 90% of a group of bearings that are operated at a given speed and loading.

manufacturer: one who constructs or fabricates an item to meet prescribed design requirements.

noncoasting mechanical drive: a drive that results in decelerating a trolley or bridge when power is not available. The braking effort will be established automatically when power to the drive is interrupted.

nondestructive examination: methods for determining the integrity of structural materials without physically

Copyright ASME International
Provided by IHS under license with ASME
No reproduction or networking permitted without license from IHS
Not for Resale

damaging the material; methods of inspection include visual, radiographic, ultrasonic, magnetic particle, and liquid penetrant.

normal walking speed: a walking speed assumed to be 150 feet per minute.

overload: any load greater than the rated load.

over-travel restraint: any device used to prevent the slack load chain from inadvertently being lowered out of the load sprocket.

owner: the organization legally responsible for the construction and/or operation of a nuclear facility including but not limited to one who has applied for, or who has been granted, a construction permit or operating license by the regulatory authority having lawful jurisdiction.

parts (lines): number of lines of hoisting rope or chain supporting the load block or hook.

plugging: a control function that provides braking by reversing the motor line voltage polarity or phase so that the motor develops a countertorque that exerts a retarding force.

push-button station: a device consisting of push-button-operated contacts, in an enclosure used by the operator, for control of the powered motions of the carrier, hoist, and other auxiliary equipment.

qualified person: a person who, by possession of a recognized degree or certificate of professional standing, or who, by extensive knowledge, training, and experience, has successfully demonstrated the ability to solve or resolve problems relating to the subject matter and work.

quality assurance: all those planned and systematic actions necessary to provide adequate confidence that a structure, system, or component will perform satisfactorily in service.

rail sweep: a mechanical device attached to the crane but located in front of the crane leading wheels to deflect any obstructions.

reach: the distance from the saddle of the load hook at its lower limit of lift to the upper point of the headroom measurement. Reach is equal to lift plus headroom.

reeving: the reeving of the hoist is the path of the rope or load chain between the drum or load sprocket and the load block.

running sheave: a sheave that rotates as the load block is raised or lowered.

runway: an assembly of rails, beams, girders, brackets, and framework on or from which the crane travels.

runway conductors: the main conductors mounted on or parallel to the runway, which supply current to the crane.

safety lug: a mechanical device fixed securely to the end truck or trolley yoke, which will limit the fall of the crane or carrier in case of wheel or axle failure.

shall: the word “shall” indicates that the rule is mandatory and must be followed to conform to the Standard.

should: the word “should” indicates that the rule is a recommendation, the advisability of which depends on the facts in each situation.

sills: horizontal structural members that connect the lower ends of two or more legs of a gantry crane on one runway.

single failure-proof features: those features that are included in the crane design, such that any credible failure of a single component will not result in the loss of capability to stop and hold the critical load within facility-acceptable excursion limits.

slew drive: the mechanism (including motor and gearing) used to rotate a jib boom about a vertical axis.

span: the horizontal distance center-to-center of runway rails.

static control: a method of switching electrical circuits without the use of contacts.

switch: a device for making, breaking, or changing connections in an electric circuit.

switch, cross-track: a track switch containing one straight section of track, pivoted at the center, which can be rotated to align it with other crossing tracks to allow passage of the carrier through the junction without changing the direction of the carrier motion.

switch, glide (slide): a track switch with a movable inner frame containing straight or curved sections of track. The inner frame can be moved to align these sections of track with other fixed tracks to permit routing of carriers.

switch, track: a device with a moving section of track, which can be moved to permit passage of a carrier from an incoming fixed track(s) to one of various outgoing fixed track(s).

Copyright ASME International
Provided by IHS under license with ASME
No reproduction or networking permitted without license from IHS Not for Resale

traceability: the ability to trace the history, application, or location of an item and like items or activities by means of recorded identification.

track opener: a section of monorail track arranged to lift or swing out of line to make an opening through which a door may pass.

tractor drive: a motor-driven unit supported by wheels and propelled by drive wheel or wheels, bearing on the underside of the track.

trolley: the unit carrying the hoisting mechanism, which travels on the bridge rails or bottom flange of a monorail track or bridge girder to transport the load.

truck: the unit consisting of a crane, wheels, bearings, and axles, which supports the bridge girders, the end ties of an overhead crane, or the sill of a gantry crane.

(04) *two-blocking:* the act of hoisting beyond the intended upper limit in which the load block comes into physical contact with the head-block (upper block) or its supporting structure, preventing further upward movement of the load block and creating a sudden and potentially severe overload.

Type I equipment: a crane, monorail, or hoist that is used to handle a critical load. It shall be designed and constructed so that it will remain in place and support the critical load during and after a seismic event, but does not have to be operational after this event. Type I equipment shall be designed with either single failure-proof features (Type IA) or enhanced safety features (Type IB).

Type IA equipment: a Type I crane, monorail, or hoist that includes single failure-proof features so that any credible failure of a single component will not result in the loss of capability to stop and hold the critical load.

Type IB equipment: a Type I crane, monorail, or hoist with enhanced safety features, including increased design factors and redundant components that minimize the potential for failure that would result in the loss of capability to stop and hold the critical load.

Type II equipment: a crane, hoist, or monorail that is not used to handle a critical load. It shall be designed and constructed so that it will remain in place during a seismic event; however, the crane need not support the load nor be operational during and after such an event. Single failure-proof features are not required.

Type III equipment: a crane, hoist, or monorail that is not used to handle a critical load; no seismic considerations are necessary, and no single failure-proof features are required.

upper block: a fixed block located on a trolley that, through a system of sheaves, bearings, pins, and frames, supports the load block and its load.

Copyright ASME International
Provided by IHS under license with ASME
No reproduction or networking permitted without license from IHS Not for Resale

Section NUM-G-7000
Referenced Codes and Standards

(04) NUM-G-7100 GENERAL

References are made to portions of other specifications within the text of these specifications. Where conflict occurs, this specification shall prevail. The following is a list of publications referenced in this Standard.

The Manual of Steel Construction Allowable Stress Design, ninth edition, 1989

Publisher: American Institute of Steel Construction (AISC), One East Wacker Drive, Chicago, IL 60601-2001

Wire Rope Users Manual, third edition

Publisher: Wire Rope Technical Board (WRTB), 801 North Fairfax Street, Suite 211, Alexandria, VA 22314-1757

ANSI/AGMA 2001-C95, Fundamental Rating Factors and Calculation Methods for Involute Spur and Helical Gear Teeth

ANSI/AGMA 9005-E02, Industrial Gear Lubrication

Publisher: American Gear Manufacturers Association (AGMA), 500 Montgomery Street, Suite 350, Alexandria, VA 22314-1560

AWS D1.1M:2002, Structural Welding Code — Steel

AWS D14.1-97, Specifications for Welding of Industrial and Mill Cranes and Other Material Handling Equipment

Publisher: American Welding Society (AWS), 550 NW Le Jeune Road, Miami, FL 33126-5671

NFPA 70-2002 National Electrical Code

Publisher: National Fire Protection Association (NFPA), One Batterymarch Park, Quincy, MA 02269-9101

SEI/ASCE 7-02, Minimum Design Loads in Buildings and Other Structures

Publisher: American Society of Civil Engineers (ASCE), 1801 Alexander Bell Drive, Reston, VA 20191-4400

ASME B30.10-1999, Hooks

ASME B30.11-1998, Monorails and Underhung Cranes

ASME B30.16-1998, Overhead Hoists (Underhung)

ASME B30.17-1998, Overhead and Gantry Cranes (Top Running Bridge, Single Girder, Underhung Hoist)

ASME HST-4-1999, Performance Standard for Overhead Electric Wire Rope Hoists

ASME NOG-1-2002, Rules for Construction of Overhead and Gantry Cranes (Top Running Bridge, Multiple Girder)

ASME NQA-1a-2002 Addenda, Quality Assurance Requirements for Nuclear Facility Applications

Publisher: The American Society of Mechanical Engineers (ASME), Three Park Avenue, New York, NY 10016; Order Department: 22 Law Drive, P.O. Box 2300, Fairfield, NJ 07007

ASTM A 36/A 36M-01, Specification for Carbon Structural Steel

ASTM A 48/A 48M-00, Specification for Gray Iron Castings

ASTM A 275/A 275M-98, Standard Test Method for Magnetic Particle Examination of Steel Forgings

ASTM A 325-02, Specification for Structural Bolts, Steel, Heat Treated, 120/105 ksi Minimum Tensile Strength

ASTM A 490-02, Specification for Heat-Treated Steel Structural Bolts, 150 ksi Minimum Tensile Strength

ASTM B 8-99, Specification for Concentric-Lay-Stranded Copper Conductors, Hard, Medium-Hard, or Soft

ASTM B 174-02, Specification for Bunch-Stranded Copper Conductors for Electrical Conductors

ASTM D 5144-00, Standard Guide for Use of Protective Coating Standards in Nuclear Power Plants

ASTM D 5161-04, Standard Guide for Specifying Inspection Requirements for Coating and Lining Work (Metal Substrates)

ASTM E 165-02, Standard Test Method for Liquid Penetrant Examination

ASTM E 380-93, Standard Practice for Use of the International System of Units (SI) (The Modernized Metric System)

Copyright ASME International
Provided by IHS under license with ASME
No reproduction or networking permitted without license from IHS
Not for Resale

ASTM E 709-01, Standard Guide for Magnetic Particle Examination

Publisher: American Society for Testing and Materials (ASTM), 100 Barr Harbor Drive, West Conshohocken, PA 19428-2959

CMAA 74-2000, Specifications for Top Running and Under Running Single Girder Electric Overhead Cranes Utilizing Under Running Trolley Hoist

Publisher: Crane Manufacturers Association of America, Inc. (CMAA), 8720 Red Oak Boulevard, Charlotte, NC 28217

EPRI NP-5380-1987, Visual Weld Acceptance Criteria

Publisher: The Electric Power Research Institute (EPRI), 3412 Hillview Avenue, Palo Alto, CA 94304-1395

NEMA ICS 1-2000, Industrial Control and Systems, General Requirements

ICS 6-1993 (R2001), Industrial Controls and Systems: Enclosures

Publisher: National Electrical Manufacturers Association (NEMA), 1300 North 17th Street, Suite 1847, Rosslyn, VA 22209-3801

RR-C-271D, Chains and Attachments, Welded and Weldless, September 1990; Amendment 1, November 1995

RR-W-410E, Wire Rope and Strand, February 2002

Publisher: Federal Specifications, Superintendent of Documents, U.S. Government Printing Office, Washington, DC 20402

SSPC Systems and Specifications Steel Structures Painting Manual, Volume 2, 8th edition, 2000

Publisher: The Society for Protective Coatings (SSPC), 40 24th Street, 6th Floor, Pittsburgh, PA 15222-4643

Copyright ASME International
Provided by IHS under license with ASME
No reproduction or networking permitted without license from IHS
Not for Resale

Section NUM-G-8000
Nomenclature

NUM-G-8100 GENERAL

The nomenclature used in this Standard is listed and defined in the area where it is used.

Copyright ASME International
Provided by IHS under license with ASME
No reproduction or networking permitted without license from IHS
Not for Resale

Section NUM-I-1000
Introduction

NUM-I-1100 GENERAL

This section of the Standard covers Type I equipment and must be used in conjunction with NUM-G, NUM-II, and NUM-III.

All NUM-I paragraphs are either new requirements in addition to NUM-II and NUM-III requirements or supersede existing NUM-II or NUM-III requirements. If the NUM-I requirements supersede the NUM-II or NUM-III requirements, the NUM-I paragraph will state which paragraph it supersedes.

Type I equipment is used to handle critical loads and is required to withstand a seismic event. Type I equipment, including its component parts and accessories, shall be designed and constructed to remain in place in the loaded and unloaded conditions during a seismic event. The equipment shall support the load but need not remain operational during or after such an event. Type I equipment shall be designed with either single-failure-proof features (Type IA) or enhanced safety features (Type IB). Both of these types of design features are outlined in this Standard.

Requirements designated for Type IA equipment apply only to Type IA; requirements designated for Type IB equipment apply only to Type IB; all other requirements apply to both Types IA and IB. Table NUM-I-1100-1 provides a summary of the major design differences between Types IA and IB. It is the responsibility of the owner to determine if either Type IA or Type IB equipment is appropriate for specific application.

The additional requirements for Type I equipment are included under the following NUM-I headings:

NUM-I-5300	Mechanical (For Jib Cranes)
NUM-I-6300	Mechanical (For Monorail Systems)
NUM-I-7700	Underrunning Trolleys
NUM-I-7900	Hoist Common Requirements (Overhead Hoists and Underhung Trolleys)
NUM-I-8200	Structural (Common Requirements and Criteria)
NUM-I-8300	Mechanical (Common Requirements and Criteria)
NUM-I-8400	Electrical (Common Requirements and Criteria)
NUM-I-8500	Inspection & Testing (Common Requirements and Criteria)

NUM-I-1300 APPLICATIONS

This section of the Standard applies to the design, manufacture, testing, inspection, shipment, storage, and erection of Type I equipment.

Copyright ASME International
Provided by IHS under license with ASME
No reproduction or networking permitted without license from IHS
Not for Resale

Table NUM-I-1100-1 Major Design Differences Between Type IA and IB **(04)**

Item	Type IA Single-Failure-Proof Features (Design Factors Based on Ultimate Strength)	Type IB Enhanced Safety Features (Design Factors Based on Ultimate Strength)	Reference Section
Reeving	Dual load path design (redundant reeving)	Single load path design (single or double reeving)	NUM-I-7942.3
Drum bearings/shaft	5:1 With drum restraint	5:1 With drum restraint or 10:1 Without drum restraint	NUM-I-7942.2
Gear box	Redundant or a brake on the rope drum	Twice the torque rating of the gears	NUM-I-7945
Two-blocking	Designed to withstand two-blocking	Designed to prevent two-blocking	NUM-I-7930

--`,,```,,,,````-`-`,,`,,`,`,,`---

Copyright ASME International
Provided by IHS under license with ASME
No reproduction or networking permitted without license from IHS
Not for Resale

Section NUM-I-5000
Jib Cranes

NUM-I-5300 MECHANICAL

NUM-I-5310 General

If a jib rotation allows the boom to move into an area of facility unacceptable excursion, positive means to "tie down" or restrain the boom for storage shall be provided.

NUM-I-5423 Brakes

In lieu of NUM-III-5423, motorized jib booms shall have brakes in accordance with NUM-I-8332.1.

Copyright ASME International
Provided by IHS under license with ASME
No reproduction or networking permitted without license from IHS
Not for Resale

Section NUM-I-6000
Monorail Systems

NUM-I-6300 MECHANICAL

NUM-I-6360 Vertical Drop or Lift Sections

Type I vertical drop or lift sections shall have structural, mechanical, and electrical components meeting the Type I requirements. The drop or lift section hoist shall be either a Type IA or Type IB hoist.

Copyright ASME International
Provided by IHS under license with ASME
No reproduction or networking permitted without license from IHS
Not for Resale

Section NUM-I-7000
Overhead Hoists and Under-Running Trolleys

NUM-I-7700 UNDER-RUNNING TROLLEYS

NUM-I-7732 Trolley Frames

In lieu of NUM-III-7732(a), safety lugs (drop lugs) shall be provided on the trolley frame to limit the drop to no greater than 1 in., should an axle or wheel fail.

NUM-I-7746 Brakes

In lieu of NUM-III-7746, trolley brakes are required for motorized trolleys and shall be in accordance with NUM-I-8332.1.

NUM-I-7747 Bumpers

In lieu of NUM-III-7747, bumpers are required and shall be supplied in accordance with NUM-I-8333.

NUM-I-7900 HOIST COMMON REQUIREMENTS

NUM-I-7910 General

In lieu of the requirements of NUM-III-7910, this section, combined with NUM-III-7900, provides all requirements that are common to manual and power (electric or air) operated hoists for vertical lifting service involving handling of freely suspended, unguided loads using wire rope or welded link type load chains as a lifting medium for Type I equipment. This Standard does not anticipate the use of chain hoists in Type IA applications. If the owner desires a Type IB chain hoist, it shall be provided with safety features equivalent to the requirements of NUM-I-7930, NUM-I-7940, and NUM-I-7952.

NUM-I-7930 Design Consideration

(a) Hoists and trolleys shall remain in place during the seismic event. See NUM-II-8323.4 for allowable stresses for mechanical fasteners on trolleys and hoist-to-trolley connections.

(b) (Type IA) The hoisting machinery from the motor to the drum shall be designed to provide assurance that a failure of a single component would not result in the uncontrolled movement of the lifted load. The wire rope drum shell is exempted from this requirement.

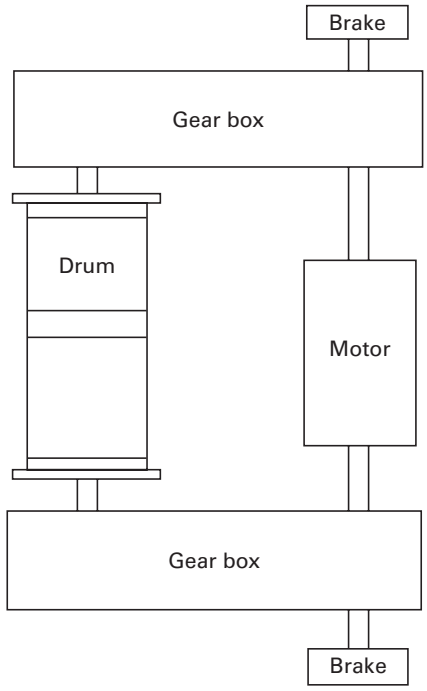

GENERAL NOTE: This figure is a block diagram provided to show conceptual layouts only. The machinery together with the reeving arrangement must comply with the vertical alignment requirements in NUM-I-7942.3(b).

Fig. NUM-I-7930-1 Type IA Dual Hoist Drive Unit With Single Drum

(c) (Type IA) Load motion due to failure of one load path of a redundant load path hoist shall be evaluated as to facility acceptability.

(d) (Type IA) Figs. NUM-I-7930-1, NUM-I-7930-2, and NUM-I-7930-3 provide some block diagrams illustrating examples of Type IA hoist equipment configurations. These block diagrams are not meant to show actual configurations and may be rearranged as needed to meet the specific application. These diagrams are only a few of many acceptable configurations.

(e) (Type IA) The hoisting machinery and wire rope **(04)**

Copyright ASME International
Provided by IHS under license with ASME
No reproduction or networking permitted without license from IHS
Not for Resale

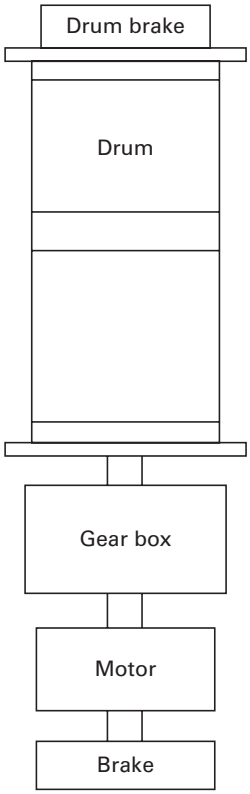

GENERAL NOTE: This figure is a block diagram provided to show conceptual layouts only. The machinery together with the reeving arrangement must comply with the vertical alignment requirements in NUM-I-7942.3(b).

Fig. NUM-I-7930-2 Type IA Single Hoist Drive Unit With Drum Brake

reeving system, in addition to other affected components, shall be designed to withstand the most severe potential overload, including two-blocking and load hangup. Allowable stresses for hoisitng machinery components during these events shall be limited to 75% of the yield strength. Wire rope stress shall be limited to 40% of the manufacturer's published breaking strength. Design calculations and component sizing shall take into consideration the maximum forces resulting from the kinetic energy of the hoisting machinery operating at maximum normal full-load or unloaded operating speed at the onset of the overload condition. Motor stall torque shall be considered, as well as all other factors contributing to maximum loading of the equipment components. The system or components (which may include torque-limiting or energy-absorbing components or systems) used to mitigate the effects of two-blocking and load hangup shall permit the hoisting machinery and crane to be returned to service without need for repair or replacement of components. Should any device in the hoist drive train such as a clutch or torque limiter fail to hold the load, the emergency brake (or other secondary/redundant load path) must be caused to engage (or remain engaged) and safely retain the load. Design calculations demonstrating the capability of the crane system to withstand severe overloads including two-blocking and load hangup shall be submitted to the Owner.

NUM-I-7940 Mechanical

NUM-I-7941 Hooks and Load Blocks

NUM-I-7941.1 Hooks. Hooks(s) shall be designed for twice the rated load (e.g., for a 5-ton rated load, the design shall be 10 tons) or shall be of single-failure-proof design.

NUM-I-7941.2 Load Blocks. Load blocks shall have double the normal design factors (e.g., for a 5-ton rated load, the design load shall be 10 tons) or shall be of a single-failure-proof design.

NUM-I-7941.3 Upper Blocks. The upper block shall have double the normal design factors or shall be of single-failure-proof design.

NUM-I-7942 Wire Rope

(a)(1) (Type IA) In lieu of NUM-III-7942(b), the rated load divided by the total number of parts of the rope shall not exceed 12.5% of the nominal breaking strength of the rope on the total system, or 25% on each of the dual systems. **(04)**

(a)(2) (Type IB) In lieu of NUM-III-7942(b), the rated load divided by the total number of parts of the rope shall not exceed 10% of the nominal breaking strength of the rope on the total system.

(b) In lieu of NUM-III-7942(d), end terminations shall be in accordance with the Wire Rope Users Manual and shall be equal to the required rope strength. Wire rope clips shall not be used as the primary end terminations

(c) In lieu of NUM-III-7942(g), rope fleet angles for the drum shall be limited to $3\frac{1}{2}$ deg, except that for the last three feet of the maximum lift elevation it shall be limited to $4\frac{1}{2}$ deg. See Fig. NUM-I-7942-2 for fleet angle measurement to the sheaves.

(d) In lieu of NUM-III-7942(h), rope fleet angles for sheaves shall be limited to $3\frac{1}{2}$ deg. See Fig. NUM-I-7942-1 for fleet angle measurement to the drum.

Copyright ASME International
Provided by IHS under license with ASME
No reproduction or networking permitted without license from IHS
Not for Resale

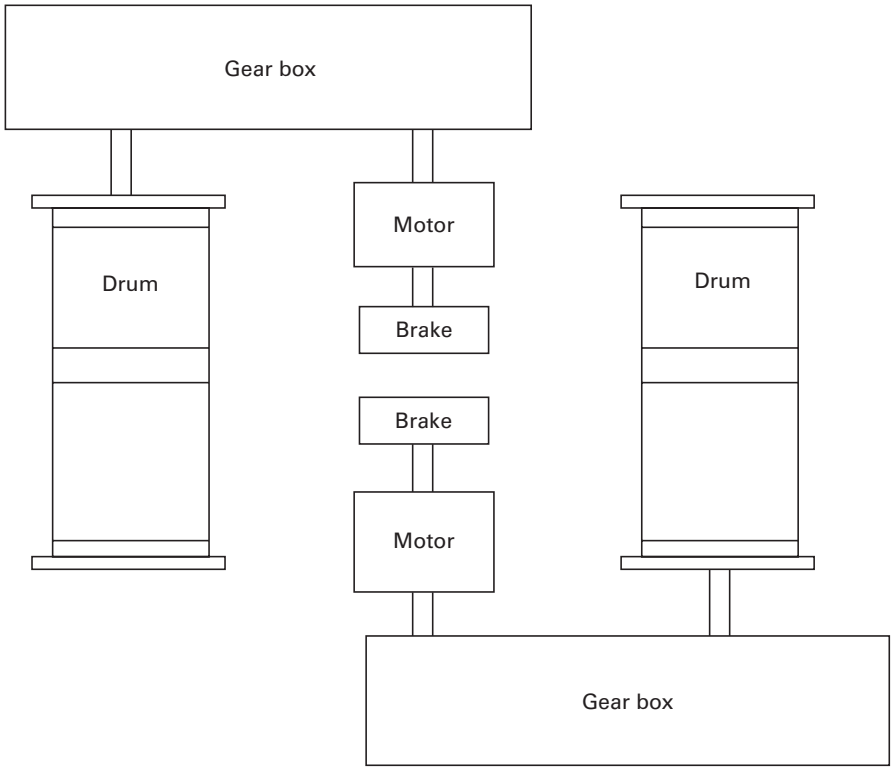

GENERAL NOTE: This figure is a block diagram provided to show conceptual layouts only. The machinery together with the reeving arrangement must comply with the vertical alignment requirements in NUM-I-7942.3(b).

Fig. NUM-I-7930-3 Type IA Dual Hoist Drive Unit With Dual Drum

NUM-I-7942.2 Drums

(a) Provisions shall be made to retain the drum and the load in the event of drum shaft or bearing failure.

(b) (Type IB) As an alternative to NUM-I-7942.2(a), the drum shaft and bearings shall be designed for twice the rated load.

NUM-I-7942.3 Reeving

(a) (Type IB) The reeving system may have a single load path design, utilizing either a single or double reeving arrangement. See NUM-III-7942.3-1 for examples.

(b) (Type IA) The reeving system shall be divided into two separate (redundant) load paths so that either path will support the load and maintain vertical alignment in the event of rope breakage or failure in the rope system. See Figs. NUM-I-7942.3-1, NUM-I-7942.3-2, and NUM-I-7942.3-3 for examples of Type IA reeving systems. These figures show three of many acceptable configurations.

NUM-I-7942.4 Equalizer Systems (Type IA). Equalizer systems shall be able to withstand the dynamic forces from load transfer upon failure of one wire rope and shall not load the remaining intact reeving system more than 40% of the breaking strength of the wire rope.

NUM-I-7942.5 Equalizer Systems (Type IB). The equalizer for a Type IB reeving system, when provided, may be a sheave or a bar, and shall be designed for twice the rated load.

NUM-I-7945 Hoist Gearing

(a) (Type IB) In lieu of the requirements stated in NUM-III-7945(a)(1), for gearing and associated shafts and couplings or other connection means, the strength and durability shall be based on twice the torque required to lift the rated load.

(b) (Type IA) Gearing and associated shafts and couplings or other connection means shall be redundant

Copyright ASME International
Provided by IHS under license with ASME
No reproduction or networking permitted without license from IHS
Not for Resale

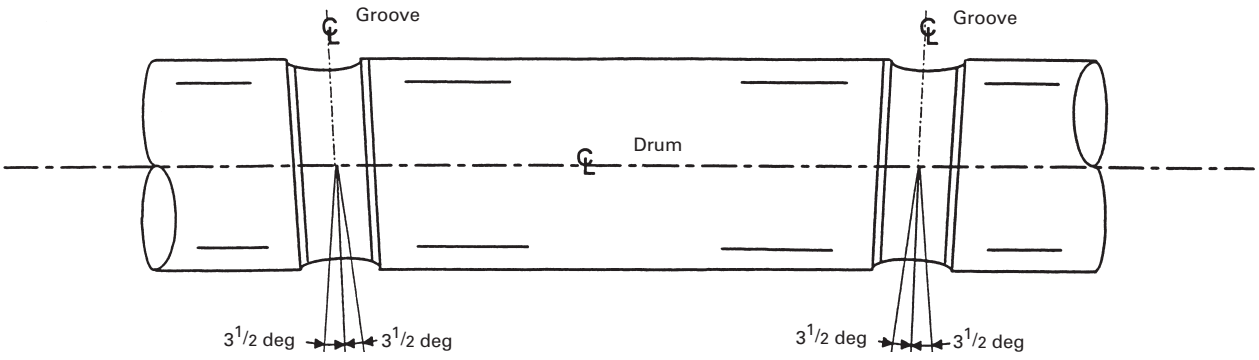

Fig. NUM-I-7942-1 Drum Fleet Angle

(that is, provide two separate load paths from the hoist brakes to the wire rope drum) with each independent gear train rated at full hoisting horsepower. As an alternative, a single hoist gear train may be provided in conjunction with two holding brakes, one of which must act directly on the wire rope drum and set automatically upon failure or overspeed of the hoist drive train.

NUM-I-7946 Hoist Brakes

NUM-I-7946.1 Power Operated Hoists

(a) In lieu of NUM-III-7946.1(a), the braking system shall consist of at least two holding brakes and a control braking means and shall perform the following functions:

(1) stop hook motion and hold the load when the controls are released;

(2) limit the speed of the load during lowering to a maximum speed of 120% of rated lowering speed for the rated load; and

(3) stop and hold the load hook in the event of a complete power failure.

(b) In lieu of NUM-III-7946.1(b), each hoist holding brake shall have a minimum dynamic torque rating of 125%, stated as a percentage of the rated load hoisting torque, at the point where the holding brake is applied.

(c) (Type IA) Two holding brakes shall be mounted such that the failure of any hoist component will not disengage both hoist holding brakes. Under normal operating conditions, the brakes will be automatically applied on power removal with the application of one brake delayed to minimize shock to the hoist drive train.

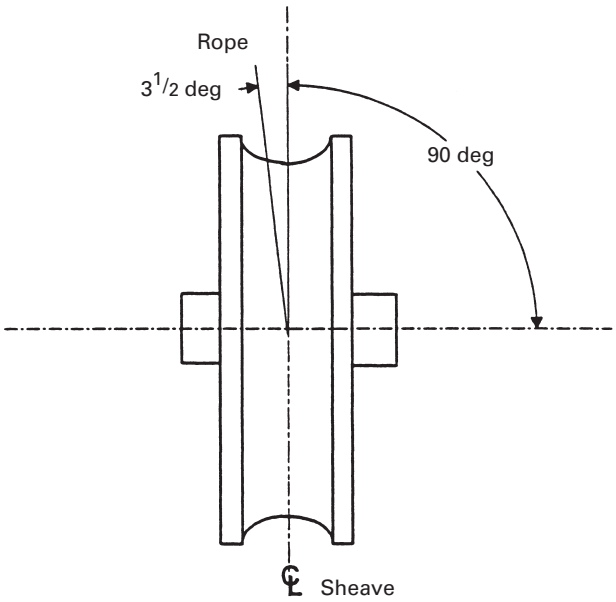

Fig. NUM-I-7942-2 Sheave Fleet Angle

NUM-I-7947 Overtravel and Overload Limiting Devices

NUM-I-7947.1 Overtravel Protection. In lieu of NUM-III-7947.1(a), power operated hoists shall have the following:

(a) First High Limit. The first upper hoisting limit shall be a control circuit device such as a geared-type, weight-operated, or paddle-operated switch. Actuation of this switch shall result in the removal of power from the motor and setting the hoist brakes. The operator may lower or back out of this tripped switch without further assistance.

(b) Final Overtravel High Limit. In addition to the

Copyright ASME International
Provided by IHS under license with ASME
No reproduction or networking permitted without license from IHS
Not for Resale

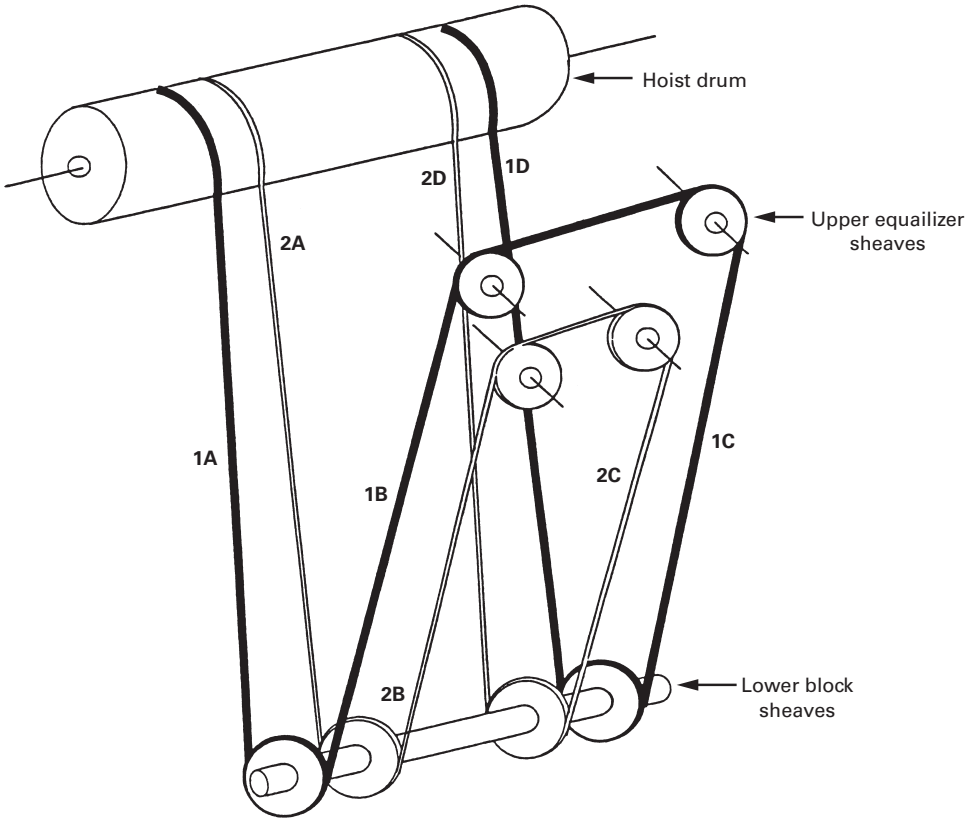

GENERAL NOTE: Relative position of sheaves is extended and angle of view is distorted to clarify reeving paths. An equalizer system between the two ropes is required but is not shown for clarity. The machinery together with the reeving arrangement must comply with the vertical alignment requirements in NUM-I-7942.3(b).

Fig. NUM-I-7942.3-1 Type IA Redundant Reeving With Single Drum

first upper limit switch, a final power circuit hoisting limit switch shall directly remove power from the hoist motor and set the hoist brakes.

(c) If the hoist is designed to withstand two blocking, only the first high limit switch is required. In this case, the ropes shall not be cut or crushed, nor the hoist damaged in the event of load block overtravel.

(d) Low Limit. The hoist shall include an overtravel low limit switch. This switch may be of the control circuit type. Actuation of this switch shall stop the lowering motion and set the hoist brakes. The operation of this switch shall not prevent hoisting.

NUM-I-7947.2 Overload Limiting Devices. Overcapacity lifts shall be detected by means of a load sensing system. The high-load limit shall be set to prevent lifting of more than rated load, but to permit lowering. The sensing system shall be set at a maximum 125% of the rated load unless analysis determines that greater than 125% is acceptable.

NUM-I-7947.3 Hoist Drum Wire Rope Spooling Monitor. Hoists shall include a wire rope spooling device to detect improper threading of the hoist rope in the hoist drum grooves. Actuation of this device shall result in removal of power from the hoist motor and setting of hoist holding brakes. Actuation of this limit device shall prevent further hoisting. A mechanical rope guide that encompasses the circumference of the drum and provides spooling of the wire rope onto the drum may be used in lieu of a spooling device.

NUM-I-7947.4 Hoist Overspeed Limits

(a) Hoists shall include an overspeed limit switch. When handling a critical load, hook speeds over 120% of the design rated load lowering speed shall trip this

Copyright ASME International
Provided by IHS under license with ASME
No reproduction or networking permitted without license from IHS
Not for Resale

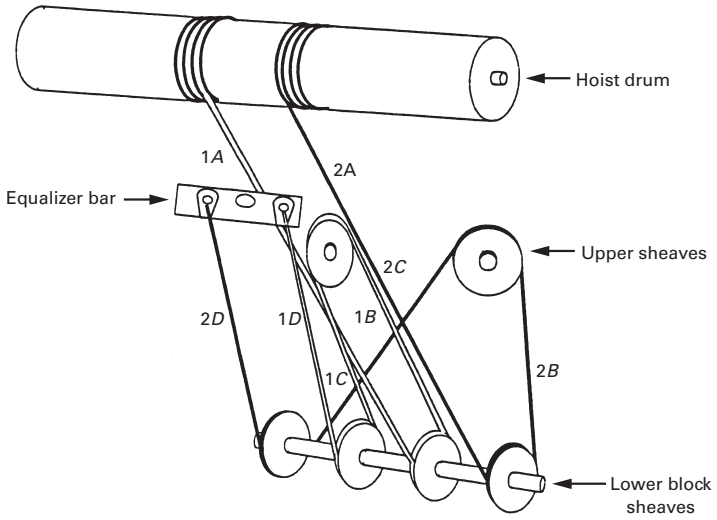

GENERAL NOTE: Relative position of sheaves is extended and angle of view is distorted to clarify reeving paths. The machinery together with the reeving arrangement must comply with the vertical alignment requirements in NUM-I-7942.3(b).

Fig. NUM-I-7942.3-2 Type IA Redundant Reeving With Single Drum

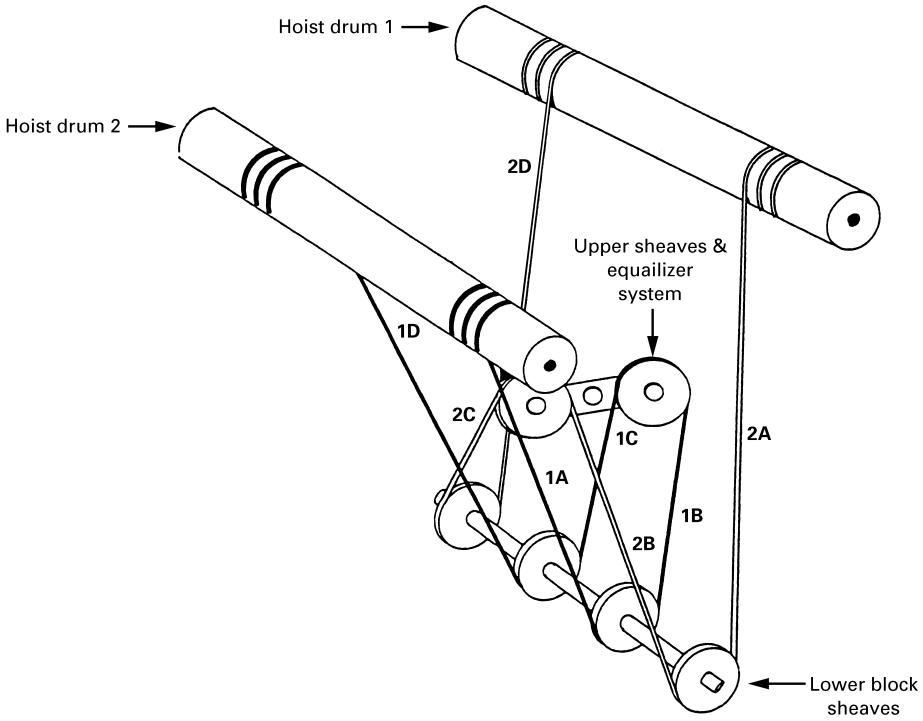

GENERAL NOTE: Relative position of sheaves is extended and angle of view is distorted to clarify reeving paths. The machinery together with the reeving arrangement must comply with the vertical alignment requirements in NUM-I-7942.3(b).

Fig. NUM-I-7942.3-3 Type IA Redundant Reeving With Dual Drum

Copyright ASME International
Provided by IHS under license with ASME
No reproduction or networking permitted without license from IHS
Not for Resale

switch, shutting off the motor and causing all holding brakes to set without intentional time delay. This switch may be set at higher speeds if analysis determines this is acceptable. Operation of this switch may also initiate any control braking means normally used for stopping of the load. It shall be necessary to return the controls to the neutral position and to manually reset the overspeed limit switch (or the overspeed circuit) before operation can be resumed.

(b) On drives that provide high-speed, light-load features, provisions shall be made to permit override of this overspeed limit switch when handling noncritical loads.

NUM-I-7947.5 Equalizer Travel Error Indication Device (Type IA). A sensing and signaling means shall be provided to automatically shut down the hoist and provide indication to the operator if displacement between the separate reeving systems exceeds design operating limits.

NUM-I-7949 Motor Shafts (Type IB)

Motor shafts for Type IB hoists shall be designed for twice the rated load unless the hoist braking system prevents drop of the load after motor shaft failure.

NUM-I-7952 Motors

Hoist motors shall have phase loss and phase reversal protection.

NUM-I-7953.2 VFD Hoist Controls. Hoists shall have controls with the following capabilities:

(a) A warning device shall be provided to warn the operator of a pending motor overheat condition.

(b) A warning device shall be provided to warn the operator that the dynamic braking resistors have overheated.

Copyright ASME International
Provided by IHS under license with ASME
No reproduction or networking permitted without license from IHS
Not for Resale

Section NUM-I-8000
Common Requirements and Criteria

NUM-I-8200 STRUCTURAL

NUM-I-8210 General

The base materials listed in Table NUM-I-8210 are considered acceptable for the structural components. The manufacturer shall list all structural materials actually employed for the owner and shall provide the materials tests and certifications as required in Tables NUM-I-8521-1A and NUM-I-8521-1B. Structural materials not listed in Table NUM-I-8210 may be acceptable with approval by the owner.

NUM-I-8212.4 Extreme Environmental Loads. In lieu of NUM-II-8212.4(b), for Type I equipment, the seismic lifted load for an SSE is the maximum lifted load under the evaluated seismic conditions where the crane or monorail structure and hoist and trolley unit must remain in place and retain the load. This lifted load is critical. The owner shall specify the seismic lifted load.

NUM-I-8300 MECHANICAL

NUM-I-8323 Seismic Analysis

NUM-I-8323.1 Criteria. In addition to the criteria in NUM-II-8323.1, analysis shall be performed to ensure retention of the load during the seismic event.

NUM-I-8330 Component Design

NUM-I-8331 Bridge Drives (Type IA)

Single-failure-proof features are generally not required for bridge travel systems. However in those cases where a failure of a component could result in an owner specified facility unacceptable motion, the design shall incorporate single-failure-proof features to ensure that the bridge is brought to a safe stop.

NUM-I-8332.1 Emergency and Parking Brakes. Emergency and parking brakes shall be provided for bridge drives and for jib crane slew drives. Any combination of service, emergency, and parking functions may be performed by a single friction brake, provided the emergency and parking functions can be obtained without having power available.

NUM-I-8333 Bumpers

In lieu of NUM-III-8333.1(a), bumpers shall be provided.

NUM-I-8400 ELECTRICAL

NUM-I-8423 Brakes

NUM-I-8423.1 Parking brakes shall be automatically applied. When two friction brakes are used on a single drive, a time delay means shall be provided to prevent simultaneous application of both brakes.

NUM-I-8424 Disconnects and Protective Devices

Control shall include a separate disconnecting means for each crane/jib motion.

NUM-I-8427 Conductor System Design

(a) Bridge and runway conductors shall utilize a separate ground conductor.

(b) Bridge and runway contact conductors shall utilize tandem collectors.

NUM-I-8500 INSPECTION AND TESTING

NUM-I-8510 General

This section, combined with NUM-II-8500 and NUM-III-8500, provides the inspection and testing requirements for all Type I equipment.

--`,,```,,,,````-`-`,,`,,`,`,,`---

Copyright ASME International
Provided by IHS under license with ASME
No reproduction or networking permitted without license from IHS

Not for Resale

Table NUM-I-8210 Reference Properties of Acceptable Materials for Structural Components

ASTM Specification	Grade or Class	Product Form	Size [Note (1)]	Yield Point/ Strength, Min., ksi	Tensile Strength, Min., ksi
A 36	. . .	Plates, shapes, bars	Plates to 8 in., shapes to 426 lb/ft	36	58-80 [Note (2)]
A 53	B	Pipe	To 26 in. dia.	35	60
A 242	. . .	Plates, shapes, bars	Plates, bars to $^3/_4$ in., shapes (Groups 1, 2)	50	70
A 242	. . .	Plates, shapes, bars	Plates, bars > $^3/_4$ in. to ≤ $1^1/_2$ in., shapes (Group 3)	46	67
A 242	. . .	Plates, shapes, bars	Plates, bars > $1^1/_2$ in. to ≤ 4 in., shapes (Groups 4, 5)	42	63
A 333	3, 7	Pipe	To 26 in. dia.	35	65
A 333	4, 6	Pipe	To 26 in. dia.	35	60
A 501	. . .	Tubing	Sq., rect. to 10 in., round to 24 in.	36	58
A 516	65	Plates	To 8 in.	35	65-85
A 516	70	Plates	To 8 in.	38	70-90
A 537	1	Plates	To $2^1/_2$ in.	50	70-90
			> $2^1/_2$ in. to ≤ 4 in.	45	65-85
A 537	2	Plates	To $2^1/_2$ in.	60	80-100
			> $2^1/_2$ in. to ≤ 4 in.	55	75-95
			> 4 in. to ≤ 6 in.	46	70-90
A 537	3	Plates	To $2^1/_2$ in.	55	80-100
			> $2^1/_2$ in. to ≤ 4 in.	50	75-95
			> 4 in. to ≤ 6 in.	40	70-90
A 572	42	Plates, shapes, bars	Plates, bars to 6 in., shapes (all Groups)	42	60
A 572	50	Plates, shapes, bars	Plates, bars to 4 in., shapes (all Groups)	50	65
A 572	60	Plates, shapes, bars	Plates, bars to $1^1/_4$ in., shapes (Groups 1, 2, and 3)	60	75
A 572	65	Plates, shapes, bars	Plates, bars to $1^1/_4$ in., shapes (Groups 1, 2, and 3)	65	80
A 588	. . .	Plates, shapes, bars	Plates, bars < 4 in., shapes (all Groups)	50	70
A 588	. . .	. . .	Plates, bars > 4 in. to ≤ 5 in.	46	67
A 588	. . .	. . .	Plates, bars > 5 in. to ≤ 8 in.	42	63
A 618	Ia, Ib, II	Tubing	To 24 in. dia., wall < $^3/_4$ in.	50	70
A 618	. . .	. . .	To 24 in. dia., wall ≥ $^3/_4$ in. to ≤ $1^1/_2$ in.	46	67
A 618	III	Tubing	To 24 in. dia., all wall thicknesses	50	65
A 633	A	Plates, shapes, bars	To 4 in.	42	63-83
A 633	C, D	. . .	To $2^1/_2$ in.	50	70-90
			> $2^1/_2$ in. to ≤ 4 in.	46	65-85
A 633	E	. . .	To 4 in.	60	80-100
A 709	36	Plates, shapes, bars	Plates, bars to 4 in., shapes to 426 lb/ft	36	58-80 [Note (2)]
A 709	50	Plates, shapes, bars	Plates, bars to 4 in., shapes (all Groups)	50	65
A 709	50W	Plates, shapes, bars	Plates, bars to 4 in., shapes (all Groups)	50	70
A 737	B	Plates	To $2^1/_2$ in. [Note (3)]	50	70-90
A 737	C	Plates	To $2^1/_2$ in. [Note (3)]	60	80-100
A 913	50	Shapes	Shapes (all Groups)	50	65
A 913	60	Shapes	Shapes (all Groups)	60	75
A 913	65	Shapes	Shapes (all Groups)	65	80
A 913	70	Shapes	Shapes (all Groups)	70	90
. . .	. . .	Patented Shape Track [Note (4)]	. . .	. . .	. . .

NOTES:
(1) For shape groups, see ASTM A 6.
(2) For wide flange shapes over 426 lb/ft (634 kg/m), the 80 ksi (550 MPa) maximum tensile strength does not apply.
(3) For additional details and special provisions, see the referenced specification.
(4) Mechanical properties, standard sizes, and design/selection criteria of patented shape track are under the auspices of the individual manufacturers. Patented shape track is comprised of an upper (compression) T-section of structural steel and a lower load carrying (tension) T-section of high-strength alloy steel. The two sections are welded continuously from both sides, web-to-web. Patented shape track is also used for crane bridge girders and jib booms with under-running trolleys or hoists with integral trolleys.

Copyright ASME International
Provided by IHS under license with ASME
No reproduction or networking permitted without license from IHS Not for Resale

NUM-I-8520 Inspection by Seller Prior to and During Manufacture

NUM-I-8521 Structural

NUM-I-8521.1 Test and Acceptance Criteria. The following identifies the specific criteria for the inspections and tests specified by Tables NUM-I-8521-1A and NUM-I-8521-1B.

(a) Welding

(1) All structural welds shall be visually inspected over their entire lengths. Acceptance criteria of welds and repairs shall be in accordance with AWS D1.1. Nondestructive testing of groove welds shall be in accordance with Tables NUM-I-8521-1A and NUM-I-8521-B.

(2) Magnetic particle test (MPT) or dye penetrant test (PT) shall be performed on 10% of the length of each weld that exceeds 10 in. in length unless stated otherwise in this Standard. Technique and acceptance criteria shall be in accordance with AWS D1.1.

(3) Welders and welding procedures shall be qualified or prequalified in accordance with AWS D1.1.

(b) Drop weight test shall be per ASTM E 208 or Charpy impact test shall be per ASTM A 370.

(c) UT Volumetric Test

(1) UT volumetric testing and acceptance criteria shall be in accordance with ASTM A 435 for plate material.

(2) UT volumetric testing shall be in accordance with ASTM E 114 and ASTM A 388 for wrought or forged material.

(a) Acceptance criteria for forged material shall be in accordance with the following:

(1) Straight beam. A forging or bar shall be unacceptable if the results of straight beam examinations show one or more reflectors that produce indications accompanied by a complete loss of back reflection not associated with or attributable to geometric configurations. Complete loss of back reflection is assumed when the back reflection falls below 5% of full calibration screen height.

(2) Angle-Beam Rule. A forging or bar shall be unacceptable if the results of angle-beam examinations show one or more reflectors that produce indications exceeding the amplitude reference line from the appropriate calibration notches.

(b) Acceptance criteria for material without parallel surfaces (such as sheave pins and shafts) shall be in accordance with NUM-I-8522.1.2(c).

NUM-I-8522 Mechanical

NUM-I-8522.1 Hooks

NUM-I-8522.1.1 Proof Load Test. A proof load test, including dimensional inspection, shall be performed on the hook(s) in accordance with ASME B30.10 prior to assembly on the hoist.

NUM-I-8522.1.2 Non-Destructive Examination (NDE)

(a) After the proof load test, surface NDE shall be performed on the hook and its shank, bolt, and nut as outlined in NUM-III-8522.1.2.

(b) After forging or casting, hook(s) shall be UT volumetric tested in accordance with ASTM E 114 and ASTM A 388 for wrought or forged material.

(1) Acceptance criteria for forged material shall be in accordance with section NUM-I-8521.1(c).

(2) Acceptance criteria for the tensioned area of the hook(s) shall be in accordance with the following:

(a) Discontinuity indications in excess of the response from an $\frac{1}{8}$ in. diameter flat-bottomed hole at the estimated discontinuity depth shall not be acceptable.

(b) Discontinuity indications in excess of the response from a $\frac{3}{32}$ in. diameter flat-bottomed hole at the estimated discontinuity depth shall not have their indicated centers closer than 1 in.

(c) Elongated (stringer) type defects in excess of 1 in. in length shall not be acceptable if at any point along the length the discontinuity indication is equal to or greater than the response from a $\frac{3}{32}$ in. diameter flat-bottomed hole.

NUM-I-8522.2 Wire Rope and Chain

NUM-I-8522.2.1 Wire Rope. A segment of the wire rope shall be pull tested. Breaking strength shall meet or exceed published breaking strength in accordance with the Wire Rope Users manual.

Where end fittings are used in the design of the load path, at least one identical fitting shall be tested with the rope sample being pulled to failure. During the testing, failure must occur in the rope, not the crimp or fitting.

NUM-I-8522.2.2 Chain. A segment of the load chain shall be pull tested. Breaking strength shall meet or exceed published breaking strength in accordance with Federal Specification RR-C-271 or the chain manufacturer's published data.

Copyright ASME International
Provided by IHS under license with ASME
No reproduction or networking permitted without license from IHS
Not for Resale

Copyright ASME International
Provided by IHS under license with ASME
No reproduction or networking permitted without license from IHS

Table NUM-I-8521-1A Required Inspections or Tests (Type IA)

Items	Material Test Reports	Certificate of Conformance From Item Manufacturer	NDE of Welds [Note (1)]	UT [Note (2)]	Surface MP or PT [Note (3)]	Impact Test [Note (4)]	Proof Load Test [Note (5)]	Breaking Strength Test [Note (6)]	Weld Filler Material C.C. Typical Value	Welder Certs
Hook [Note (7)]	X	...	...	X	X	...	X	...	...	...
Hook nut or attachment device [Note (8)]	X	...	...	X	X	...	X	...	...	...
Hook trunion cross head and load block load structure (cast or forged)	X	...	...	X	X	...	...	...	...	...
Hook trunion cross head and load block load structure (rolled)	X	...	...	...	...	X	X	...	...	...
Load block structural welds	...	...	X	...	...	...	...	...	X	X
Load block sheave pin	X	...	...	X	X	...	...	...	...	...
Load chains	...	X	...	...	...	...	...	X	...	...
Wire rope	...	X	...	...	...	...	...	X	...	...
Hoist drum	X	...	...	...	...	...	...	...	...	...
Hoist drum shell and hub welds	...	...	X	...	...	...	...	...	X	X
Hoist drum shafts	X	...	...	X	X	...	...	...	...	...
Upper block sheave pin	X	...	...	X	X	...	...	...	...	...
Upper block load structure (cast or forged)	X	...	...	X	X	...	...	...	...	...
Upper block load structure (rolled)	X	...	...	...	...	X	...	...	...	...
Upper block structural welds	...	...	X	...	...	...	...	...	X	X
Sheaves	...	X	...	...	...	...	...	...	...	...
Gears — hoists [Note (9)]	X	...	...	X	X	...	...	...	...	...
Pinions — hoist [Note (9)]	X	...	...	X	X	...	...	...	...	...
Shafts — hoist [Note (9)]	X	...	...	X	X	...	...	...	...	...
Trolley load girt structure (cast or forged)	X	...	...	X	X	...	...	...	...	...
Trolley load girt structure (rolled)	X	...	X	...	...	X	...	...	X	X
Primary load bearing struct. welds (crane or monorail)	...	...	X	...	...	...	...	...	X	X

(continued)

Not for Resale

Copyright ASME International
Provided by IHS under license with ASME
No reproduction or networking permitted without license from IHS

Table NUM-I-8521-1A Required Inspections or Tests (Type IA) (Cont'd)

Items	Material Test Reports	Certificate of Conformance From Item Manufacturer	NDE of Welds [Note (1)]	UT [Note (2)]	Surface MP or PT [Note (3)]	Impact Test [Note (4)]	Proof Load Test [Note (5)]	Breaking Strength Test [Note (6)]	Weld Filler Material C.C. Typical Value	Welder Certs
Fastener material for struct. interconnections (including seismic restraints and safety lugs)	X	X	...	...	...	...	...	...	...	...
Crane or monorail structure	X	...	...	...	...	X	...	...	...	...
Bridge and trolley seismic restraints	X	...	X	...	...	X	...	...	X	X
Safety lugs	X	...	...	...	...	X	...	...	X	X
Hinges or pins on jib cranes [Note (10)]	X	...	...	X	X	...	...	...	...	...
Tension rods for jibs or monorails [Note (10)]	X	...	...	X	X	...	...	...	...	...
Wire rope eyes and sockets [Note (11)]	...	X	...	...	...	...	X	...	...	...

NOTES:
(1) See NUM-I-8521.1(a).
(2) See NUM-I-8521.1(c).
(3) See NUM-III-8522.1.2(b).
(4) Impact testing required for materials greater than $^{5}/_{8}$" thickness. See NUM-I-8521.1(b).
(5) See NUM-I-8522.1.1.
(6) See NUM-I-8522.2.
(7) See NUM-I-8522.1.
(8) Load tested with hook. See NUM-I-8522.1.2.
(9) Surface hardness shall be verified when hardness values are specifically listed on manufacturer's design documents.
(10) If the item is designed with double a design margin, material test reports are not required.
(11) Proof tested to 40% of the published breaking strength of the wire rope.

Not for Resale

Copyright ASME International
Provided by IHS under license with ASME
No reproduction or networking permitted without license from IHS

Table NUM-I-8521-1B Required Inspections or Tests (Type IB)

Items	Material Test Reports	Certificate of Conformance From Item Manufacturer	NDE of Welds [Note (1)]	UT [Note (2)]	Surface MP or PT [Note (3)]	Impact Test [Note (4)]	Proof Load Test [Note (5)]	Breaking Strength Test [Note (6)]	Weld Filler Material C.C. Typical Value	Welder Certs
Hook [Note (7)]	X	...	...	X	X	...	X	...	...	...
Hook nut or attachment device [Note (8)]	X	...	...	X	X	...	X	...	...	...
Hook trunion cross head and load block load structure (cast or forged) [Note (9)]	...	...	...	...	...	...	X	...	...	...
Hook trunion cross head and load block load structure (rolled) [Note (9)]	...	...	...	...	...	...	X	...	...	...
Load block structural welds	...	...	X	...	...	...	...	...	...	...
Load block sheave pin [Note (9)]	...	...	...	...	...	...	X	...	...	...
Load chains	...	X	...	...	...	...	...	X	...	...
Wire rope	...	X	...	...	...	...	...	X	...	...
Hoist drum [Note (9)]	...	...	...	...	...	...	X	...	...	...
Hoist drum shell and hub welds	...	...	X	...	...	...	...	...	...	...
Hoist drum shafts [Note (9)]	...	...	...	...	...	...	X	...	...	...
Upper block sheave pin [Note (9)]	...	...	...	...	...	...	X	...	...	...
Upper block load structure (cast or forged) [Note (9)]	...	...	...	...	...	...	X	...	...	...
Upper block load structure (rolled) [Note (9)]	...	...	...	...	...	...	X	...	...	...
Upper block structural welds	...	...	X	...	...	...	...	...	...	...
Sheaves [Note (9)]	...	...	...	...	...	...	X	...	...	...
Gears — hoist [Note (9)]	...	...	...	...	...	...	X	...	...	...
Pinions — hoist [Note (9)]	...	...	...	...	...	...	X	...	...	...
Shafts — hoist [Note (9)]	...	...	...	...	...	...	X	...	...	...
Hoisting machinery load path welds	...	...	X	...	...	...	X	...	...	...
Hoist assembly [Note (10)]	...	...	...	...	...	...	X	...	...	...
Trolley load girt structure (cast or forged) [Note (11)]	X	...	...	X	X	...	...	...	...	...
Trolley load girt structure (rolled) [Note (11)]	X	...	X	...	...	X	...	...	X	X
Primary load bearing struct welds (crane or monorail)	...	...	X	...	...	...	...	...	X	X

(continued)

Not for Resale

Copyright ASME International
Provided by IHS under license with ASME
No reproduction or networking permitted without license from IHS

Table NUM-I-8521-1B Required Inspections or Tests (Type IB) (Cont'd)

Items	Material Test Reports	Certificate of Conformance From Item Manufacturer	NDE of Welds [Note (1)]	UT [Note (2)]	Surface MP or PT [Note (3)]	Impact Test [Note (4)]	Proof Load Test [Note (5)]	Breaking Strength Test [Note (6)]	Weld Filler Material C.C. Typical Value	Welder Certs
Fastener material for struct interconnections (including seismic restraints and safety lugs)	X	X	...	...	...	...	...	...	...	...
Crane or monorail structure	X	...	...	...	...	X	...	...	...	...
Bridge and trolley seismic restraints	X	...	X	...	...	X	...	...	X	X
Safety lugs	X	...	X	...	...	X	...	...	X	X
Hinges or pins on jib cranes [Note (12)]	X	...	...	X	X	...	...	...	...	...
Tension rods for jibs or monorails [Note (12)]	X	...	...	X	X	...	...	...	...	...
Wire rope eyes and sockets [Note (13)]	...	X	...	...	...	...	X	...	...	...

GENERAL NOTE: Surface hardness shall be verified when hardness values are specifically listed on manufacturer's design documents.

NOTES:
(1) See NUM-I-8521.1(a).
(2) See NUM-I-8521.1(c).
(3) See NUM-III-8522.1.2(b).
(4) Impact Testing required for materials greater than $^{5}/_{8}$" thickness. See NUM-I-8521.1(b).
(5) See NUM-I-8522.1.1.
(6) See NUM-I-8522.2.
(7) See NUM-I-8522.1.
(8) Load tested with hook. See NUM-I-8522.1.
(9) To be proof tested with the hoist assembly.
(10) Proof test assembled hoist at 250% of rated crane or monorail capacity.
(11) In lieu of stated requirements, a 250% load test may be performed with a visual weld inspection.
(12) If the item is designed with double a design margin, material test reports are not required.
(13) Proof tested to 40% of the published breaking strength of the wire rope.

Not for Resale

NUM-I-8523 Electrical

NUM-I-8523.1 Visual. Inspections shall be performed at the crane, monorail, or hoist manufacturer's plant (or during field erection if not possible to perform at the plant) to verify the following:

(a) terminal connections for tightness;

(b) panels and resistors are properly placed;

(c) required fuses are installed;

(d) panels, switches, resistors, and other parts and materials are in accordance with drawings and are properly identified;

(e) raceways are properly supported and installed, and raceways to be removed for shipment are properly marked and fitted for field reinstallation;

(f) no interferences involving electrical items exist when trolley moves through its full range;

(g) electrical items do not protrude beyond the confines of the crane, monorail, or hoist as established by the drawings;

(h) electrical items requiring routine maintenance are accessible;

(i) no wiring is touching resistor heating parts;

(j) portions of conductor systems that are designed to move in order to accomodate crane, monorail, or hoist move freely;

(k) pendant and festoon cable strain relief is properly installed;

(l) overload relay current sensing elements are in accordance with drawings;

(m) motor connections are properly made;

(n) contactors and electromechanical relays whose armatures are accessible operate freely by hand;

(o) electrical enclosures are correct NEMA type, and panel door operate properly;

(p) motor brushes are properly seated;

(q) electrical holding brakes are djusted to correct torque settings; and

(r) conductors are identified at each termination and correspond to the schematic diagrams.

NUM-I-8524 Control Software

Desk audits, peer reviews, and static analysis tools/techniques shall be used throughout the development process to verify implementation of design requirements in the source code, with particular attention paid to the implementation of identified safety critical functions such as fault detection and safing or correcting logic.

NUM-I-8530 Shop Operational Tests

A shop no-load test shall be performed at the crane/hoist manufacturer's facility. Procedures shall be prepared and used by the manufacturer in conducting the test. If subsequent manufacturing or associated activities affect the validity of this test or portions thereof, the appropriate portions of the test shall be repeated. Nonconformances found during the testing shall be treated as required by the test procedure.

NUM-I-8532.1 Mechanical Requirements. As a minimum, the following mechanical functions shall be verified.

(a) Traverse the trolley on the bridge, verify interfaces of auxiliary equipment (powered operation is preferred).

(b) Operation of mechanical components shall be verified to meet design criteria.

(c) (Type IA) Type IA hoists shall be two-blocked at maximum hoisting speed to demonstrate that the equipment is capable of withstanding high-speed two-blocking and load hangup without damage and within allowable stress limits in accordance with NUM-I-7930. **(04)**

NUM-I-8532.2 Electrical Requirements. A test of the crane/hoist electrical system shall be made to verify proper operation of the controls. For remote controlled cranes/hoists, the transmitter-receiver system shall be used for this test.

NUM-I-8532.3 Software Requirements. For Programmable Logic Controller (PLC) controlled cranes/hoists, the PLC software shall be installed and used during the test. Software testing (either breadboard or as part of the crane/hoist testing) shall include the following, as a minimum:

(a) hardware, software, and operator input failure mode testing;

(b) boundary, out-of-bounds, and boundary crossing test conditions;

(c) input values of zero, zero crossing, and approaching zero from either direction; and

(d) minimum and maximum input data rates in worst case configurations to determine system capabilities and responses to these environments.

Copyright ASME International
Provided by IHS under license with ASME
No reproduction or networking permitted without license from IHS
Not for Resale

NUM-I-8580 Site Load Testing

NUM-I-8582 No-Load Testing

NUM-I-8582.1 Additional Requirements. While the no-load testing is being performed, the following information shall be recorded or observed:

(a) Electrical (full speed conditions)
- *(1)* motor volts
- *(2)* motor amps
- *(3)* motor rpm

(b) Mechanical
- *(1)* noise levels
- *(2)* oil leaks
- *(3)* excessive vibration
- *(4)* clearances per drawings and specifications
- *(5)* gear alignment and engagement
- *(6)* wire rope or chain condition

(c) Structural
- *(1)* overall building clearances
- *(2)* bridge and trolley end approaches

(d) All software faults

(04) *(e)* Components, systems, and features having single-failure-proof functions related to retaining the load in event of failure in the primary load path are functioning correctly and are properly adjusted and calibrated.

NUM-I-8583 Full-Load Test

The crane/hoist/monorail shall be statically loaded at bridge mid-span (or end of boom) to 100% (+5%, –0%) of hoist manufacturer's rating, and the deflection of the bridge (at its center) or monorail rail (at its center) or boom (at its end) shall be measured and recorded. With this load, the crane/hoist/monorail shall be operated through all drives for hoist, trolley, and bridge/boom, and through all speed ranges to demonstrate speed controls and proper function of limit switches, locking, and safety devices as practical with full load. Manually operated load lowering devices, if supplied, shall be tested. Each holding brake shall be tested individually to verify it will stop and hold the test load.

NUM-I-8584 Rated Load Test

After the no-load and full load tests are completed and prior to handling loads, the equipment shall be rated load tested.

(a) The crane, monorail, or hoist shall receive a load test of 125% (+5%, –0%) of the rated capacity.

(b) The test shall consist of the following operations, as a minimum.

(1) Lift the test load approximately 2 ft and hold the load for a minimum of 10 min to verify no drum rotation and test weight drift.

(2) The hoist overload detection devices shall be tested to verify that they activate when the test weight is greater than 125% of rated load.

(3) Perform loss of power test by interrupting the main electrical power or air supply while lowering the test load at slow speed to verify that the holding brakes (and emergency brakes, if applicable) set and hold the load.

(4) Transport the load by means of the trolley (or carrier) from one end of the crane bridge, jib, or monorail to the other. The trolley shall approach the limits of travel as close as practical in the event use area restrictions are imposed.

(5) For bridge and gantry cranes, transport the test load for the full length of the runway in one direction with the trolley as close to the extreme right-hand end of the crane as practical, and in the other direction with the trolley as close to the left-hand end of the crane as practical. When cranes operate on more than two runways (multiple truck cranes), the crane shall transport the test load for the full length of the runway with the test load under each of the intermediate trucks.

(6) Verify that the nameplate reflects the load rating per NUM-I-8584(a).

(7) For jib cranes, verify that there is jib boom motion with trolley located at each end and at the center of the boom.

--`,,```,,,,````-`-`,,`,,`,`,,`---

Copyright ASME International
Provided by IHS under license with ASME
No reproduction or networking permitted without license from IHS Not for Resale

Section NUM-II-1000
Introduction

NUM-II-1100 GENERAL

The NUM-II part of the NUM-1 Standard covers Type II equipment used in nuclear facilities and must be used in conjunction with NUM-G and NUM-III.

The entire NUM-III Section is applicable for Type II equipment, but it is not repeated here in Section NUM-II. Section NUM-II as it appears builds on Section NUM-III while providing additional requirements needed for Type II equipment.

All NUM-II paragraphs are either new requirements in addition to NUM-III requirements or supersede existing NUM-III requirements. If the NUM-II requirements supersede the NUM-III requirements, the NUM-II paragraph will state which paragraph it supersedes.

Type II equipment is equipment that is not used to handle critical loads, is required to withstand a seismic event, and is not required to be single failure-proof.

Type II equipment and the components thereof shall be designed and constructed to remain in place with or without the load during a seismic event. The equipment need not support the load nor remain operational during or after such an event.

The additional requirements for withstanding a seismic event are included under the following NUM-II headings:

NUM-II-7100	Description
NUM-II-8200	Structural
NUM-II-8300	Mechanical
NUM-II-8400	Electrical
NUM-II-8500	Inspection and Testing

NUM-II-1300 APPLICATIONS

This section of the Standard applies to the design, manufacture, testing, inspection, shipment, storage, and erection of Type II equipment.

Copyright ASME International
Provided by IHS under license with ASME
No reproduction or networking permitted without license from IHS
Not for Resale

Section NUM-II-7000
Overhead Hoists and Under-Running Trolleys

NUM-II-7100 DESCRIPTION

In addition to the requirements of NUM-III-7100, hoists and trolleys shall remain in place during and after a seismic event.

--`,,```,,,,````-`-`,,`,,`,`,,`---

Copyright ASME International
Provided by IHS under license with ASME
No reproduction or networking permitted without license from IHS

Not for Resale

Section NUM-II-8000
Common Requirements and Criteria

NUM-II-8200 STRUCTURAL

NUM-II-8212 Descriptions of Loads

Loads due to safe shutdown earthquake are categorized as Extreme Environmental Loads.

NUM-II-8212.4 Extreme Environmental Loads

(a) Earthquake Safe Shutdown (E_S). The site SSE parameters shall be used in the seismic analysis of the crane or monorail following the guidance of section NUM-II-8215.

(b) Seismic Lifted Load SSE (LL_{ES}). For Type II equipment, the seismic lifted load for an SSE is the maximum lifted load under the evaluated seismic conditions where the crane or monorail structure and hoist and trolley unit must remain in place. This lifted load is not a critical load and, therefore, the load itself need not be retained under the SSE event.

Depending upon the facility-specific application, the requirement that Type II equipment remain in place may not require consideration of a seismic lifted load. The owner shall specify the seismic lifted load, if any, that is to be considered.

NUM-II-8213 Load Combinations

Case 4: Crane or monorail subjected to a Safe Shutdown Earthquake

$$DL + TL + LL_{ES} + E_S + WLO \quad (1)$$

$$DL + TL + E_S + WLO \quad (2)$$

where

E_S = load due to a Safe Shutdown Earthquake (SSE)

LL_{ES} = maximum seismic lifted load during an SSE

NUM-II-8215 Seismic Analysis for Type II Equipment

NUM-II-8215.1 Methods of Analysis. A dynamic analysis method (e.g., response-spectrum or time-history method) or an equivalent static analysis shall be used to establish the response of the equipment to a seismic event.

NUM-II-8215.2 Seismic Input Data. The seismic input data for the equipment seismic analysis shall be provided by the owner. The seismic input shall be specified as broadened floor response spectra or time histories of acceleration, displacements, or velocities defined at an appropriate level in the structure supporting the crane or monorail.

NUM-II-8215.3 Dynamic Analysis

NUM-II-8215.3.1 Response-Spectrum Method. The crane or monorail shall be considered to respond as a linear elastic system when using the response-spectrum method. The undamped natural modes and frequencies shall be computed using a model acceptable under the rules of this section. These outputs shall serve as the basis for mode-by-mode computation of the response of the crane or monorail to each of the three components of seismic input.

NUM-II-8215.3.2 Time-History Analysis. Time histories of structural response at the appropriate level may be used for analysis of the crane or monorail. The time histories shall be provided by the owner. Procedures for assembling the mathematical model shall be in accordance with this section. The effects of the three components of ground motion shall be combined in accordance with the following requirements.

(a) The representative maximum values of the structural responses to each of the three components of earthquake motion shall be combined by taking the square root of the sum of the squares of the maximum

Copyright ASME International
Provided by IHS under license with ASME
No reproduction or networking permitted without license from IHS
Not for Resale

representative values of the codirectional responses caused by each of the three components of earthquake motion at a particular point of the structure or of the mathematical model.

(b) The maximum value of a particular response of interest for design of a given element may be obtained through a step-by-step method. The time-history responses from each of the three components of the earthquake motions may be obtained separately and then combined algebraically at each time step, or the response at each time step may be calculated directly, owing to the simultaneous action of the three components. The maximum response is determined by scanning the combined time-history solution. When this method is used, the earthquake motions specified in the three different directions shall be statistically independent.

NUM-II-8215.3.3 Mathematical Model

(a) The crane or monorail shall be represented by a generalized three-dimensional system of nodes. The model's geometry shall reflect the overall size, length, connectivity, and stiffness of the various structural members. An appropriate element representation of each member shall be used to describe all components that contribute significantly to the stiffness of the equipment.

(b) For cranes using pin-connected wheel trucks, pinned connections shall be specified for line elements that represent the attachment of the end trucks to the bridge girders or gantry legs. Where various connected structural members of the crane do not have intersecting centroidal axes, stiff line elements shall be used to represent the offset. These elements shall have stiffnesses that are an order of magnitude higher than the stiffest structural member of the crane.

(c) A simplified finite element representation of the trolley structure using stiff line elements may be used for the crane or monorail dynamic model, provided it can be shown by rational analyses that the actual trolley structure responding as an uncoupled system has natural frequencies above 33 Hz. The model used for seismic analysis should be evaluated and revised if required to account for higher frequencies if plant operations induce such frequencies.

NUM-II-8215.3.4 Location and Number of Dynamic Degrees of Freedom. Dynamic degrees of freedom shall be assigned to a sufficient number of node points, and in such locations that the real mass and stiffness distribution of the equipment are simulated. Structural members subject to concentrated loads shall be provided with additional nodes at the points where a concentrated load or its equivalent mass is positioned. Crane or monorail components to be modeled as mass points (concentrated loads) shall include, but not be limited to, upper and lower blocks, gear cases, motors, brakes, heavy electrical control cabinets, cab, wheel assemblies, and trunnion pins. The total number of masses, or degrees of freedom, selected shall be considered adequate when additional degrees of freedom do not result in more than a 10% increase in responses. Dynamic coupling shall be accounted for.

NUM-II-8215.3.5 Decoupling Criteria for the Runway. The crane or monorail and runway shall be evaluated to determine if the equipment should be represented as a separate model or a model coupled with the runway. For the equipment to be considered decoupled from the runway, the criteria of (a) or (b) below shall be met.

(a) If $R_m < 0.01$, decoupling can be done for any R_f.

(b) If $0.01 \le R_m \le 0.1$, decoupling can be done if $R_f \le 0.8$ or if $R_f \ge 1.25$.

(c) If $R_m \ge 0.1$, or $0.8 \le R_f \le 1.25$, an approximate model of the runway system shall be included with the model.

R_m and R_f are defined as:

$$R_m = \frac{\text{total mass of the crane}}{\text{mass of the runway system}} \quad (3)$$

$$R_f = \frac{\text{fundamental frequency of the crane}}{\text{frequency of the dominant runway motion}} \quad (4)$$

The owner shall determine the mass and frequency characteristics of the runway.

NUM-II-8215.3.6 Boundary Conditions

(a) The crane or monorail shall be provided with devices so that they remain on their respective runways during and after a seismic event. Characteristics of these devices that influence the dynamic behavior of the crane or monorail shall be included as boundary conditions in the model of the equipment. The restraint devices shall be considered to be in contact with the resisting structure in establishing boundary conditions used in the analysis for the crane or monorail. The restraint device and resisting structure shall be designed for the maximum load resulting from the boundary condition considered. The crane or monorail shall be modeled with the wheel-to-rail boundary conditions specified in Fig. NUM-II-8215.3-1, unless additional restraining, driving, or holding mechanisms exist. The configurations shown in Table NUM-II-8215.3-1 were developed to show standard configurations. Other configurations are also acceptable.

--`,,```,,,,````-`-`,,`,,`,`,,`---

Copyright ASME International
Provided by IHS under license with ASME
No reproduction or networking permitted without license from IHS

Not for Resale

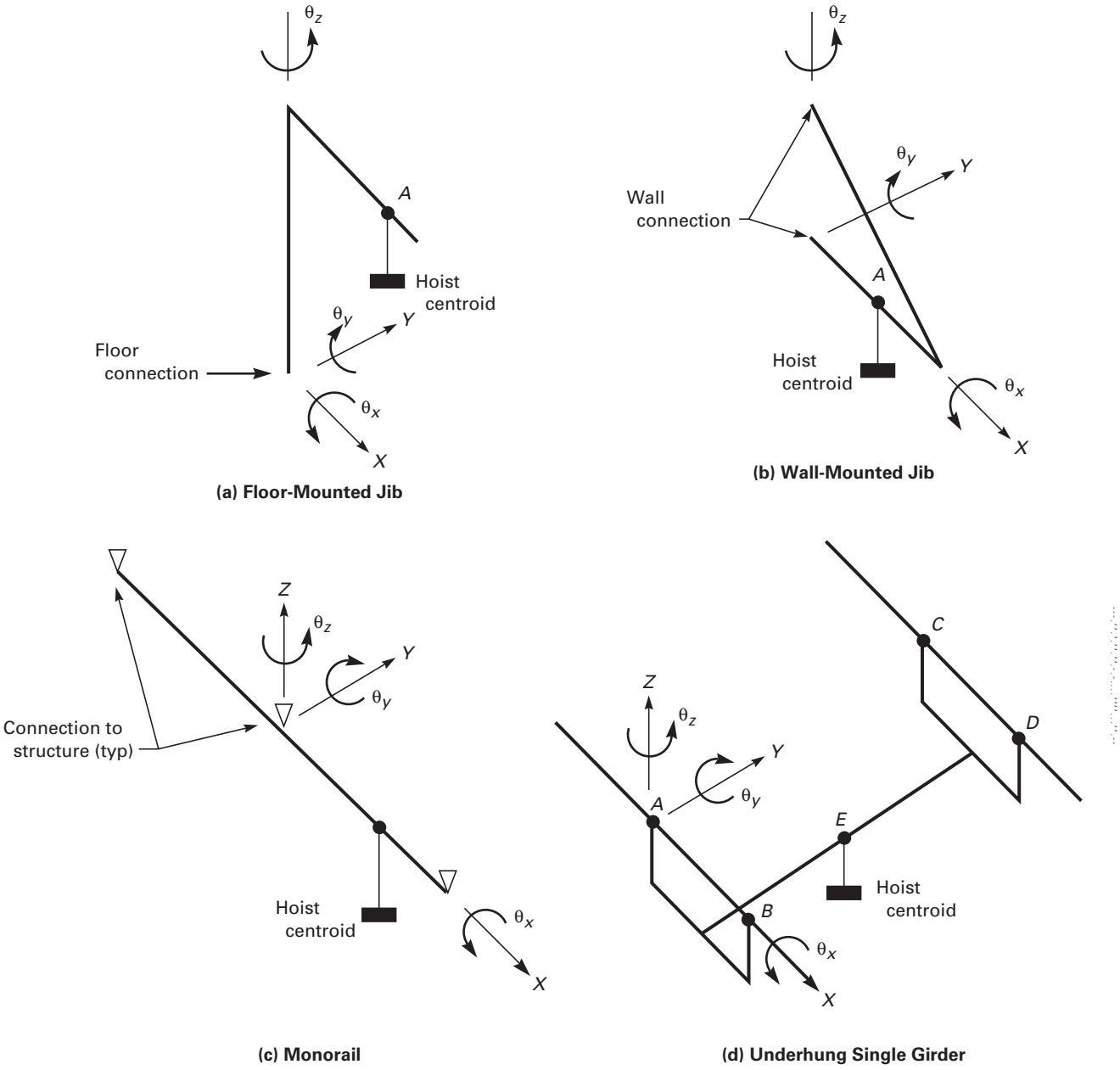

GENERAL NOTES:
(a) The hoist is modeled as a lumped mass at its centroid.
(b) The members are modeled at their centroidal axis.
(c) The nodes shown illustrate wheel-to-rail boundary conditions. Additional nodes are required to complete the mathematical model.

Fig. NUM-II-8215.3-1 Boundary Conditions for Wheel-to-Rail Interface

Copyright ASME International
Provided by IHS under license with ASME
No reproduction or networking permitted without license from IHS
Not for Resale

Table NUM-II-8215.3-1 Boundary Conditions for Wheel-to-Rail Interface (04)

	Restraint Condition					
	Translation			Rotation		
Node	*X*	*Y*	*Z*	θ_X	θ_Y	θ_Z
Floor jib						
A	Fixed	Fixed	Fixed	Fixed	Fixed	Fixed
Wall jib						
A	Fixed	Fixed	Fixed	Fixed	Fixed	Fixed
Monorail						
A	Fixed	Fixed	Fixed	Fixed	Fixed	Fixed
Underhung						
A	Fixed	Fixed	Fixed	Free	Free	Free
B	Free	Fixed	Fixed	Free	Free	Free
C	Fixed	Free	Fixed	Free	Free	Free
D	Free	Free	Fixed	Free	Free	Free
E	Fixed	Fixed	Fixed	Fixed	Fixed	Fixed

(b) The crane or monorail boundary conditions at pivot points (such as hinges at jib crane connections) need to be modeled in computer analysis as rotationally fixed about the rotation of the hinge. If left free to rotate, the crane or monorail will be unstable and the results of the analyses will be unrealistic. By fixing the rotation around the pin, the stresses in the crane or monorail will be conservative. During an actual seismic event, however, the crane or monorail will tend to rotate about these pivot points. It is the responsibility of the owner to determine if uncontrolled movement about the pivot point is acceptable (i.e., the crane or monorail movement will not impact and damage equipment). If uncontrolled movement is not acceptable, the owner shall specify that restraint devices be provided that will limit or dampen the movement.

(c) The crane or monorail boundary conditions at the point of interface with the building structure shall be determined by the person performing the crane or monorail analysis. The boundary conditions shall take into consideration the method of attachment and flexibility of connections.

NUM-II-8215.3.7 Trolley Locations and Hoist Positions. The crane or monorail (bridge, jib, trolley, and hoist as applicable) shall be analyzed under the following loading conditions:

(a) seismic lifted load on hook (if specified)

(b) no load on hook

The analysis procedure shall use the bridge, jib, trolley, and hoist in as many different positions as necessary to envelope the worst case loading situation. Since this Standard encompasses many different cranes and monorails, which may be fabricated and installed in many different configurations, it is the responsibility of the manufacturer to determine the worst case configurations.

NUM-II-8215.3.8 Crane or Monorail Damping Values. The response of each mode shall be determined from the amplified response spectra for the appropriate values of structural damping. A damping value of 5% of critical damping shall be used for the crane or monorail when the SSE is used in the analysis.

NUM-II-8215.3.9 Number of Modes Required for Seismic Analysis. It is not generally necessary to include the contributions of all modes to the seismic response of the crane or monorail. A modal participation factor shall be used with the modal frequencies to select significant modes. Since high frequency modes may respond strongly in some cases, it is not sufficient to limit the modal analysis to the first several modes computed. Additional modes shall be computed until the inclusion of additional modes does not result in more than a 10% increase in response.

NUM-II-8215.3.10 Combination of Modal Responses. In combining the dynamic responses, it shall be assumed that the dynamic responses have the sign that yields the worst case for the combination being considered.

(a) With No Closely Spaced Modes. When the results of the modal dynamic analysis show that the crane or monorail modes are not closely spaced, the equipment's response to each of the three components of seismic input shall be combined by taking the square root of the sum of the squares (SRSS).

(b) With Closely Spaced Modes. When the results

Copyright ASME International
Provided by IHS under license with ASME
No reproduction or networking permitted without license from IHS Not for Resale

of the modal dynamic analysis show that some or all of the modes are closely spaced (two consecutive modes are defined as closely spaced if their frequencies differ from each other by 10% or less of the lower frequency), modal responses for each of the three components for seismic input shall be combined using one of the following three methods.

(1) Grouping Method. Closely spaced modes shall be divided into groups that include all modes having frequencies between the lowest frequency in the group and a frequency 10% higher [see Note (1) below]. The representative maximum value of a particular response of interest for the design of a given element of a nuclear power plant structure, system, or the crane or monorail attributed to each such group of modes, shall first be obtained by taking the sum of the absolute values of the corresponding peak values of the response of the element attributed to individual modes in that group. The representative maximum value of this particular response attributed to all the significant modes of the structure, system, or the crane or monorail, shall then be obtained by taking the square root of the sum of the squares of corresponding representative maximum values of the response of the element attributed to each closely spaced group of modes and the remaining modal responses for the modes that are not closely spaced.

Mathematically, this is expressed as follows:

$$R = \left[\sum_{k=1}^{N} R_k^2 + \sum_{q=1}^{P} \sum_{l=i}^{j} \sum_{m=i}^{j} |R_{lq}\, R_{mq}| \right]^{1/2} \tag{5}$$

where $l \neq m$; R_{lq} and R_{mq} are modal responses, R_l and R_m are within the qth group, respectively; i is the number of the mode where a group starts; j is the number of the mode where the group ends; R, R_k, and N are as defined in Note (2) below; P is the number of groups of closely spaced modes, excluding individual, separated modes.

(2) 10% Method:

$$R = \left[\sum_{k=1}^{N} R_k^2 + 2 \sum |R_i\, R_j| \right]^{1/2} \tag{6}$$

where $i \neq j$; and R, R_k, and N are as defined in Note (2) below. The second summation shall be done on all i and j modes whose frequencies are closely spaced to each other. Let ω_i and ω_j be the frequencies of the ith and jth modes. In order to verify which of the modes are closely spaced, the following equation shall be applied:

$$(\omega_j - \omega_i)/\omega_i \leq 0.1 \tag{7}$$

Also,

$$1 \leq i < j \leq N \tag{8}$$

(3) Double-Sum Method:

$$R = \left[\sum_{k=1}^{N} \sum_{s=1}^{N} |R_k\, R_s|\, \epsilon_{ks} \right]^{1/2} \tag{9}$$

where R, R_k, and N are as defined in Note (2) below. R_s is the peak value of the response of the element attributed to the sth mode, and ϵ_{ks} is a correlation coefficient between modes k and s.

$$\epsilon_{ks} = \left(1 + \left[\frac{(\omega_k' - \omega_s')}{(\beta_k'\, \omega_k + \beta_s'\, \omega_s)} \right]^2 \right)^{-1} \tag{10}$$

in which

$$\omega_k' = \omega_k \left[1 - \beta_k^2 \right]^{1/2} \tag{11}$$

$$\beta_k' = \beta_k + \frac{2}{t_d\, \omega_k} \tag{12}$$

where ω_k and β_k are the modal frequency and the damping ratio in the kth mode, respectively, and t_d is the time duration of the earthquake.

NOTES:
(1) Groups shall be formed starting from the lowest frequency and working toward successively higher frequencies. No one frequency shall be in more than one group.
(2) R is the representative maximum value of a particular response of a given element to a given component of an earthquake; R_k is the peak value of the response of the element due to the kth mode; and N is the number of significant modes considered in the modal response combination.

(c) Combination of Three Components of Earthquake Motion. The representative maximum values of the structural responses of each of the three directional components of earthquake motion shall be combined by taking the square root of the sum of the squares

Copyright ASME International
Provided by IHS under license with ASME
No reproduction or networking permitted without license from IHS
Not for Resale

of the maximum m representative values of the codirectional responses caused by each of the three components of earthquake motion at each node of the crane or monorail mathematical model.

NUM-II-8215.4 Equivalent Static Analysis. In cases where a dynamic analysis is not necessary because the crane or monorail model is very simple (as in the case of a single-span monorail or simple jib crane), an equivalent static analysis can be performed.

NUM-II-8215.4.1 Mathematical Model. The crane or monorail shall be represented by a generalized three-dimensional system of nodes. The model's geometry shall reflect the overall size, length, connectivity, and stiffness of the various structural members. An appropriate element representation of each member shall be used to describe all components that contribute significantly to the stiffness of the crane or monorail.

NUM-II-8215.4.2 Decoupling Criteria for the Runway. Refer to para. NUM-II-8215.3.5.

NUM-II-8215.4.3 Trolley Locations and Hoist Positions. Refer to para. NUM-II-8215.3.7.

NUM-II-8215.4.4 Crane or Monorail Damping Values. Refer to para. NUM-II-8215.3.8.

NUM-II-8215.4.5 Number of Modes Required for Seismic Analysis. Only the fundamental frequency of the crane or monorail in each direction of earthquake is used. For fundamental frequencies less than or equal to the frequency at which the maximum spectral acceleration occurs, the maximum spectral acceleration shall be used. For fundamental frequencies greater than the frequency at which the maximum spectral acceleration occurs, the actual spectral acceleration depicted on the response spectra curve shall be used. The maximum spectral acceleration may conservatively be used without calculation of the fundamental frequency.

NUM-II-8215.4.6 Combination of Modal Responses. Since only one mode is calculated in each direction, an increase factor of 1.5 shall be used on the acceleration to account for other modes.

NUM-II-8215.4.7 Combination of Three Components of Earthquake Motion. The representative maximum values of the structural responses of each of the three directional components of earthquake motion shall be combined by taking the square root of the sum of the squares of the maximum representative values of the codirectional responses caused by each of the three components of earthquake motion at each node of the crane or monorail mathematical model.

NUM-II-8300 MECHANICAL

NUM-II-8323 Seismic Analysis

NUM-II-8323.1 Criteria. Analyses shall be performed to confirm that those mechanical components, which if dislodged would damage safety-related equipment, shall remain in place during the seismic event.

NUM-II-8323.2 Component Analysis (> 33 Hz). Components whose major resonant frequency is greater than 33 Hz may be modeled as a lumped mass.

(a) Analysis shall consist of the determination of the stress level of the mounts when applying maximum dynamic forces to the center of gravity of the item.

(b) Loads due to vertical and horizontal motions shall act together and shall be combined in accordance with NUM-II-8215.

NUM-II-8323.3 Component Analysis (< 33 Hz). Components whose major resonant frequency is less than 33 Hz shall be analyzed dynamically. The component shall be represented by a generalized three-dimensional system of nodes. The model's geometry shall reflect the overall size, length, connectivity, and stiffness of the various structural members. An appropriate element representation of each member shall be used to describe all components that contribute significantly to the stiffness.

NUM-II-8323.4 Allowable Stresses for Fasteners. Seismic loads shall induce stresses that, when combined with appropriate dead and live loads, do not exceed 90% of the yield strength of the fastener.

NUM-II-8400 ELECTRICAL

NUM-II-8411 Seismic

Analyses shall be performed to confirm that those electrical components, which if dislodged would damage safety-related equipment, shall remain in place during the seismic event.

NUM-II-8412 Allowable Stresses for Fasteners

Fasteners for mounting electrical components, such as control enclosures, shall comply with the requirements of NUM-II-8323.4.

Copyright ASME International
Provided by IHS under license with ASME
No reproduction or networking permitted without license from IHS Not for Resale

NUM-II-8500 INSPECTION AND TESTING

NUM-II-8521

NUM-II-8521.1 Structural Welds. Welds whose failure during a seismic event could cause the crane/monorail/hoist to fall shall be nondestructively tested. For butt welds, radiographic testing (RT) or ultrasonic testing (UT) shall be performed in accordance with NUM-II-8521.5(a). For other welds, magnetic particle testing (MT) or dye penetrant testing (PT) shall be performed in accordance with NUM-II-8521.5(b).

NUM-II-8521.3 Structural Materials. Material test reports shall be required on structural materials, including seismic restraints, whose failure during a seismic event would cause the crane/monorail/hoist to fall.

NUM-II-8521.4 Fasteners. Material test reports shall be required on fasteners, including those of a seismic restraint, whose failure during a seismic event would cause the crane/monorail/hoist to fall.

NUM-II-8521.5 Nondestructive Tests. The following are the nondestructive tests for the welds identified in NUM-II-8521.1:

(a) 100% radiographic test (RT) or ultrasonic test (UT) of butt welds in accordance with AWS D1.1. Acceptance criteria shall be in accordance with AWS D1.1.

(b) 100% magnetic particle test (MT) or dye penetrant test (PT) of each weld 10 in. or less in length; 10% MT or PT of each weld that exceeds 10 in. in length. Technique and acceptance criteria shall be in accordance with AWS D1.1.

Copyright ASME International
Provided by IHS under license with ASME
No reproduction or networking permitted without license from IHS
Not for Resale

Section NUM-III-1000
Introduction

NUM-III-1100 GENERAL

The NUM-III part of the NUM-1 Standard covers type III equipment used in nuclear facilities and must be used in conjunction with NUM-G. Type III equipment is equipment that is not used to handle critical loads, is not required to withstand a seismic event, and is not required to be single failure-proof.

The NUM-III part of the NUM-1 Standard is divided into the following Sections:

NUM-III-1000	Introduction
NUM-III-2000	Underhung Cranes
NUM-III-3000	Top-Running Bridge and Gantry Cranes
NUM-III-4000	Traveling Wall Cranes
NUM-III-5000	Jib Cranes
NUM-III-6000	Monorail Systems
NUM-III-7000	Overhead Hoists and Under-Running Trolleys
NUM-III-8000	Common Requirements and Criteria

NUM-III-1300 APPLICATIONS

This section of the Standard applies to the design, manufacture, testing, inspection, shipment, storage, and erection of Type III equipment.

Copyright ASME International
Provided by IHS under license with ASME
No reproduction or networking permitted without license from IHS
Not for Resale

Section NUM-III-2000
Underhung Cranes

NUM-III-2100 DESCRIPTION

In accordance with the introduction for Type III equipment defined in Section NUM-III-1000, Section NUM-III-2000 applies to the following:

(a) Underhung, single-girder cranes whose wheels operate on the bottom flange of a runway track. (See Fig. NUM-III-2100-1.)

(b) Underhung, multiple-girder cranes whose wheels operate on the bottom flange of a runway track. (See Figs. NUM-III-2100-2 and NUM-III-2100-3.)

(c) Semi-gantry cranes having one end of the bridge supported by wheels operating on the bottom flange of a runway track and having one end of the bridge rigidly supported on a leg, with the leg supported on a top-running end truck (covered in Section NUM-III-3000) operating on a fixed rail or track. (See Fig. NUM-III-2100-4.)

NUM-III-2200 STRUCTURAL

NUM-III-2210 General

This section covers structural requirements and design criteria specific to type III underhung cranes. For other structural requirements and criteria common to all cranes, refer to NUM-III-8200.

NUM-III-2220 Design Criteria

NUM-III-2221 Allowable Deflections and Cambers

NUM-III-2221.1 Miscellaneous Structure Deflection. Deflections of components such as end ties, end trucks, trolley load bars, and auxiliary beams shall not impair the functions for which they were designed or cause any attachments to the crane to become dislodged or leave the crane.

NUM-III-2221.2 Girder Deflection. The maximum vertical deflection of the girder produced by the bridge dead load, trolley dead load (including hoist dead weight), and design rated load shall not exceed $^{1}/_{600}$ of the span. Impact need not be considered in determining deflection. For interlocking cranes, the deflection shall not exceed $^{1}/_{1000}$ of the span.

NUM-III-2221.3 Girder Camber. Where girders are cambered, the recommended amount of camber is equal to the bridge dead load deflection, plus $^{1}/_{2}$ of the deflection caused by the trolley dead load (including hoist dead weight), plus $^{1}/_{2}$ of the deflection caused by the design rated load. Girder camber and deflection shall be considered when determining vertical clearances.

NUM-III-2230 Components Design

NUM-III-2231 Girders, Beams, or Tracks. Girders may be standard rolled beams, patented shape track, or plate girders. Where necessary, auxiliary girders shall be used to support overhanging loads to minimize torsional moments on and lateral deflections of the girder. The analysis required for girders shall be in accordance with NUM-III-8200. On spans over 16 ft, the ratio of span to top flange width shall not exceed 60 to 1.

NUM-III-2232 End Trucks. The crane bridge shall be carried on end trucks designed to carry the rated loads when lifted at one end of the crane bridge (closest approach). Load combinations and basic allowable stresses are to be in accordance with NUM-III-8213 and NUM-III-8231. The wheel base of the outermost wheels shall be $^{1}/_{8}$ of the span or greater.

End trucks may be of the rotating-axle or fixed-axle type. Provisions shall be made to prevent a drop of the crane not more than 1 in. in the case of axle failure. When appropriate, equalizer bridge trucks are to be incorporated to promote sharing of the bridge wheel loads. Equalizer pins are to be provided between equalizer truck and equalizer beams and/or rigid bridge structures. A rail sweep shall be provided in front of each outside wheel. End trucks shall be in accordance with applicable sections of NUM-III-8200.

Copyright ASME International
Provided by IHS under license with ASME
No reproduction or networking permitted without license from IHS
Not for Resale

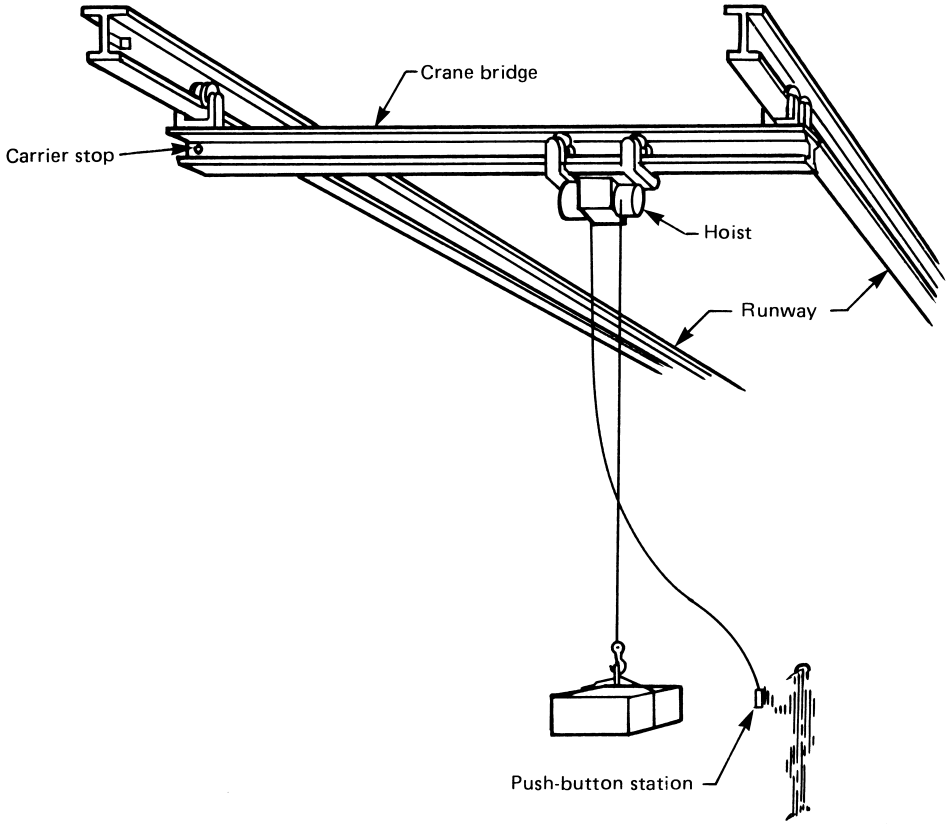

Fig. NUM-III-2100-1 Single-Girder Underhung Crane

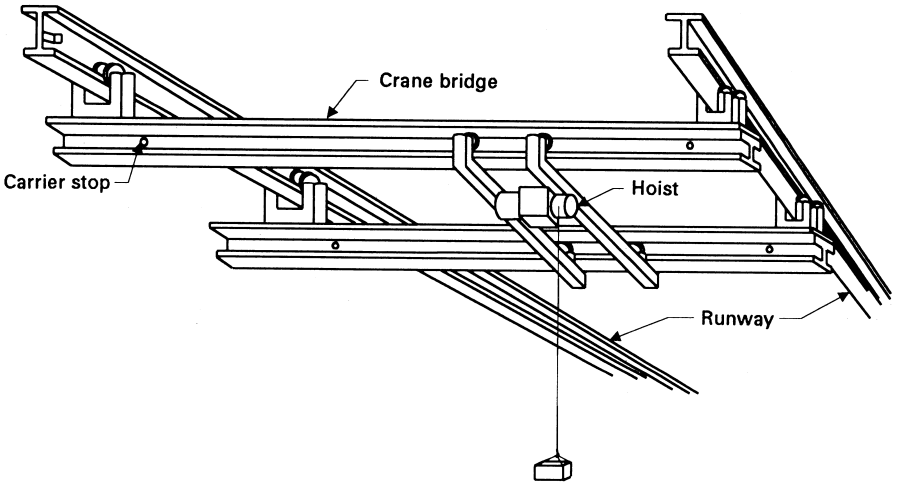

Fig. NUM-III-2100-2 Double-Girder Underhung Crane With Underhung Trolley

Copyright ASME International
Provided by IHS under license with ASME
No reproduction or networking permitted without license from IHS Not for Resale

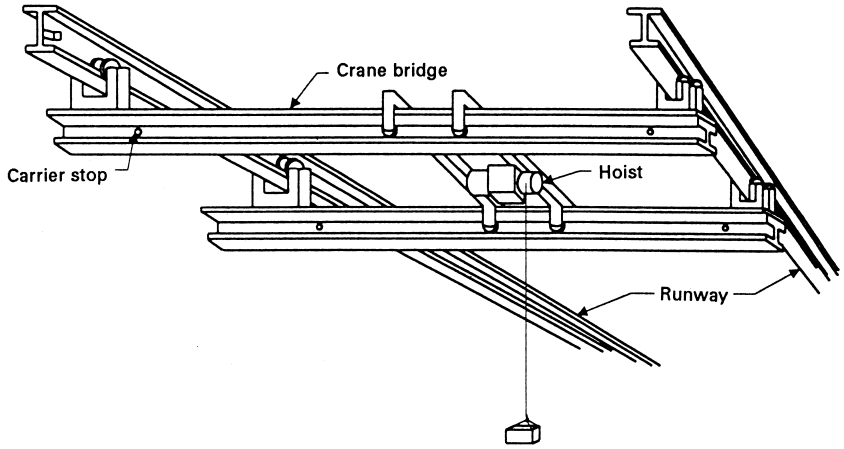

Fig. NUM-III-2100-3 Double-Girder Underhung Crane With Top-Running Trolley

NUM-III-2300 MECHANICAL

NUM-III-2310 General

This section covers the specific mechanical requirements and criteria for underhung bridge cranes. For other mechanical requirements and criteria common to all cranes, refer to NUM-III-8300.

NUM-III-2320 Bridge

NUM-III-2321 Bridge Drive. The bridge drive arrangements normally used with underhung bridge cranes are illustrated in Figs. NUM-III-2321-1 and NUM-III-2321-2. An underhung bridge has a minimum of four pairs of wheels and shall utilize a drive arrangement where at least one pair of wheels is driven on each end truck. Underhung bridges running on multiple runways may be driven by wheel pairs on two or more end trucks. End trucks may be driven by more than one wheel pair.

NUM-III-2321.1 Bridge Drive Arrangements

(a) A-2 Drive

(1) The motor is connected to a self-contained gear reducer unit located near the center of the bridge. The gear reducer is connected to a set of squaring shafts, which in turn are connected to the end truck drive pinions. The pinions drive the geared section of the wheels.

(2) The motor is connected by chain and sprockets or through a self-contained reducer to a squaring shaft, which in turn is connected to the axle of the rubber wheels at each bridge end truck. The rubber drive wheels are arranged to provide spring-loaded contact to the underside of the runway rail for traction drive.

(b) A-4 Drive

(1) A mechanically independent drive is provided at each bridge end truck. The drive motor is directly connected to the integral self-contained gear reduction unit, which in turn is connected to the drive pinion that drives the geared section of the bridge wheels.

(2) A mechanically independent drive is provided at each bridge end truck. The drive motor is directly connected to the integral self-contained gear reduction unit, which in turn is connected to the axle of the rubber wheel. The rubber drive wheel is arranged to provide spring-loaded contact to the underside of the runway rail for traction drive.

NUM-III-2322 Bridge Interlocking Mechanisms

(a) Interlock mechanisms for underhung cranes shall maintain alignment between mating track sections and provide smooth trolley transfer across sections.

(b) Stops or forks shall be part of the interlock mechanisms to prevent the trolley from rolling off open track ends. When girders and spur tracks or transfer sections are aligned and interlock mechanisms are engaged, stops or forks shall be in the open position and permit transfer of the trolley. When girders and spurs or transfer tracks are not aligned and the interlock mechanisms are not engaged, stops or forks shall be in the closed position.

(c) Interlock mechanisms shall be designed to limit vertical misalignment to less than $\frac{1}{8}$ in.

(d) Interlocking cranes and mating tracks shall have a gap of less than $\frac{1}{4}$ inch between adjacent ends of the load-carrying flange.

Copyright ASME International
Provided by IHS under license with ASME
No reproduction or networking permitted without license from IHS
Not for Resale

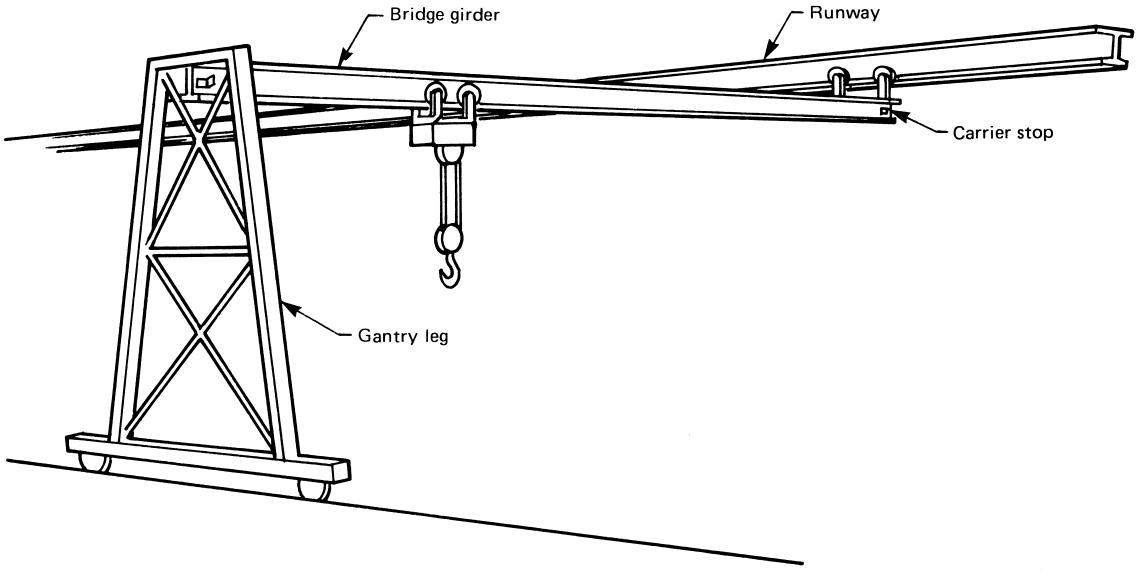

Fig. NUM-III-2100-4 Single-Girder Underhung Semi-Gantry Crane

NUM-III-2330 Underhung Trolley

Underhung trolleys are covered by NUM-III-7700. If the trolley is top running, refer to NOG-1 (for trolley design only).

NUM-III-2331 Underhung Trolley Drive. Trolley drives for single-girder bridge cranes shall be in accordance with NUM-III-7741. Underhung trolley drives for double-girder bridge cranes shall be driven on both sides similar to bridge drives and in accordance with NUM-III-8300.

NUM-III-2340 Hoist

The hoist shall be in accordance with Section NUM-III-7000.

NUM-III-2400 ELECTRICAL

NUM-III-2410 General

(a) Except as noted under (b) below, the following information applies to underhung cranes that have an electric-motor-operated bridge.

(b) For underhung cranes that do not have an electric-motor-operated bridge, but that utilize either an electrically operated hoist or electrically operated trolley, the information listed under the following headings will still apply: Disconnects and Protective Devices, Operator Stations and Controllers, Current Conducting Systems, and Wiring Materials and Methods.

NUM-III-2420 Electrical Components

NUM-III-2421 Crane Controls. Crane controls shall meet the criteria of NUM-III-8421.

NUM-III-2422 Motors. Traverse drive motors for an electric-motor-operated bridge shall meet the criteria of NUM-III-8422, with motor sizing in accordance with NUM-III-8422.5.

NUM-III-2423 Brakes

(a) An electric-motor-operated bridge shall be furnished with either a noncoasting mechanical drive or spring-set, friction-type brakes for each traverse drive motor.

(b) A noncoasting mechanical drive shall be capable of stopping the motion of the bridge, within a distance in feet, equal to 10% of the full load speed in feet per minute, when traveling at full speed with rated load.

(c) Spring-set, friction-type brakes shall be in accordance with NUM-III-8423.

NUM-III-2424 Disconnects and Protective Devices. Disconnects and protective devices shall be provided in accordance with NUM-III-8424.

NUM-III-2425 Operator Stations and Controllers

(a) The type of operator station and its location shall be specified by the owner.

(b) The location of the pendant push-button station controllers shall be one of the following:

Copyright ASME International
Provided by IHS under license with ASME
No reproduction or networking permitted without license from IHS
Not for Resale

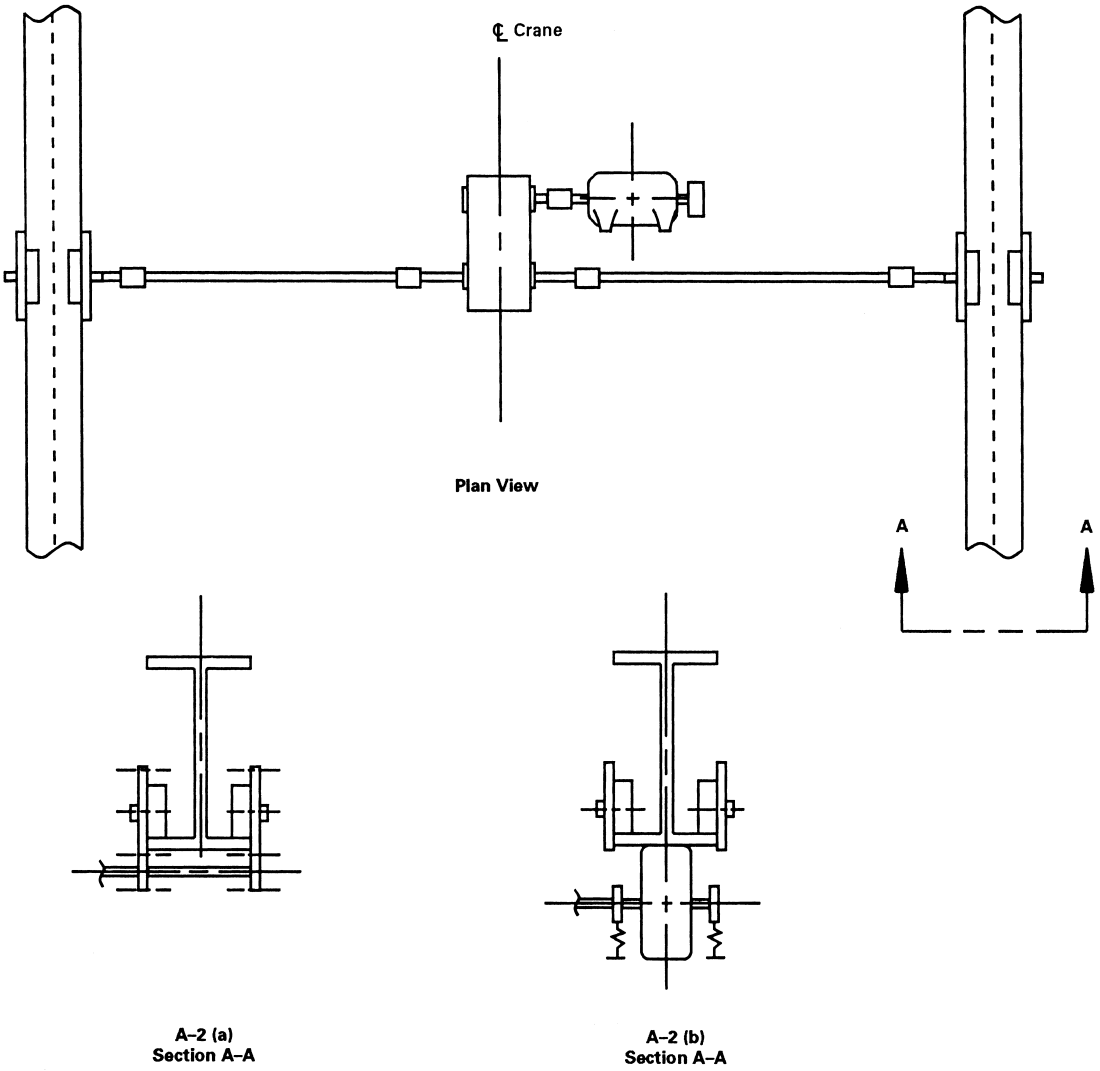

Fig. NUM-III-2321-1 Arrangement of Crane Bridge Drives (A-2 Drive)

(1) suspended from the hoist and trolley,

(2) suspended from a festooned messenger track system along the bridge span,

(3) suspended from a single point off the bridge, or

(4) remote-mounted off the crane.

(c) A crane operator station of any type shall meet the criteria on NUM-III-8425.

NUM-III-2426 Electrical Enclosures. Electrical enclosures shall be in accordance with the criteria of NUM-III-8426, suitable for the owner-specified environmental conditions of service.

NUM-III-2427 Current Conductor Systems

(a) The type and location of runway system conductors shall be specified by the owner.

(b) All current conductor systems shall meet the criteria of NUM-III-8427.

NUM-III-2428 Warning Devices. Warning device information and criteria shall be in accordance with NUM-III-8428.

NUM-III-2429 Auxiliary Electrical Equipment. Auxiliary electrical equipment information and criteria, such as for travel limit switches, shall be in accordance with NUM-III-8429.

Copyright ASME International
Provided by IHS under license with ASME
No reproduction or networking permitted without license from IHS
Not for Resale

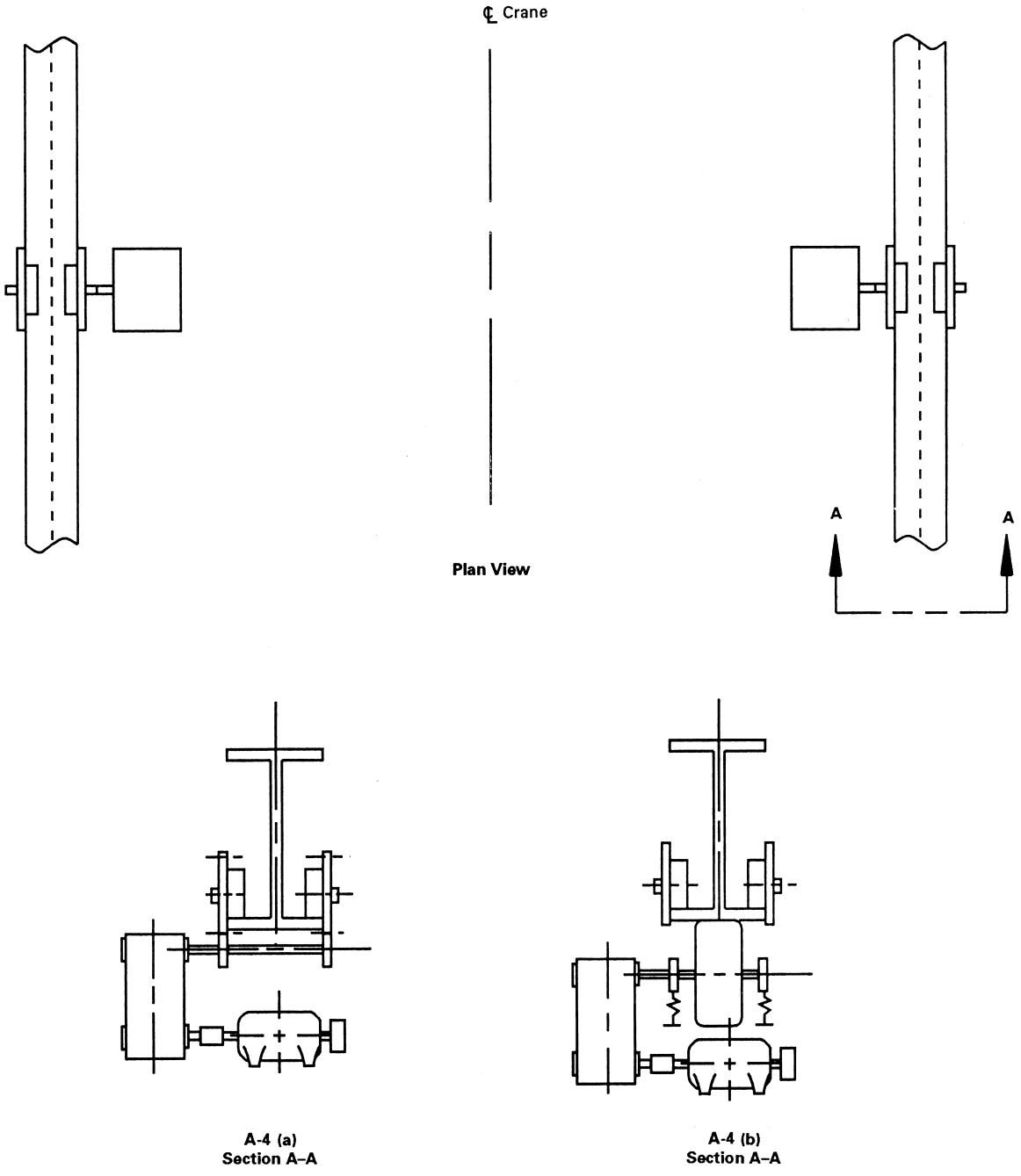

Fig. NUM-III-2321-2 Arrangement of Crane Bridge Drives (A-4 Drive)

NUM-III-2430 Wiring Materials and Methods

Wiring materials and methods shall meet the criteria of NUM-III-8430.

NUM-III-2500 INSPECTION AND TESTING

Perform inspection and testing of underhung cranes in accordance with NUM-III-8500, as applicable.

Copyright ASME International
Provided by IHS under license with ASME
No reproduction or networking permitted without license from IHS
Not for Resale

Section NUM-III-3000
Top-Running Bridge and Gantry Cranes

NUM-III-3100 DESCRIPTION

In accordance with the introduction for type III equipment defined in Section NUM-III-1000, Section NUM-III-3000 applies to the following:

(a) Top-running, single-girder cranes whose end trucks operate on fixed rails or tracks attached to the top flange or surface of runway girders. Overhead hoists of the underhung type (covered in Section NUM-III-7000) may be rigidly suspended or trolley suspended from the bridge girder. If the trolley is suspended, the trolley will operate on the bottom flange of the bridge girder. The bridge girder may be patented shape, a structural shape, a reinforced patented or structural shape, or a fabricated section. (See Fig. NUM-III-3100-1.)

(b) Top-running, double-girder cranes whose end trucks operate on fixed rails or tracks attached to the top flange or surface of runway girders, and which utilize an underhung, trolley-suspended hoist. Overhead hoists of the underhung type (covered in Section NUM-III-7000) may be rigidly suspended or trolley suspended from the bridge girders. The trolley operates on the bottom flange of the bridge girders, which may be a patented shape, a structural shape, a reinforced patented or structural shape, or a fabricated section. (See Fig. NUM-III-3100-2.) Top-running, double-girder cranes with trolley-hoist units that operate on fixed rails or tracks attached to the top flange or surface of the bridge girders are covered by ASME NOG-1.

(c) Top-running, semi-gantry cranes having one end of the bridge supported by an end truck operating on a fixed rail or track attached to the top flange or surface of a runway girder, and having one end of the bridge rigidly supported on a leg with the leg supported on an end truck operating on a fixed rail or track. Hoists, trolleys, and girders are the same as described in para. NUM-III-3100(a). (See Fig. NUM-III-3100-3.)

(d) Top-running, gantry cranes having both ends of the bridge rigidly supported on legs, with the legs supported on end trucks operating on fixed rails or tracks. Hoists, trolleys, and girders are the same as described in para. NUM-III-3100(a). (See Fig. NUM-III-3100-4.)

NUM-III-3200 STRUCTURAL

NUM-III-3210 General

This section covers structural requirements and design criteria specific to type III top-running bridge and gantry cranes. For other structural requirements and criteria common to all cranes, refer to NUM-III-8200.

NUM-III-3220 Design Criteria

NUM-III-3221 Allowable Deflections and Cambers

NUM-III-3221.1 Structure Deflection. Deflections of components such as end ties, end trucks, trolley load bars, and auxiliary beams shall not impair the functions for which they were designed or cause any attachments of the crane to become dislodged or leave the crane.

NUM-III-3221.2 Girder Deflection. The maximum vertical deflection of the girder produced by the bridge dead load, trolley dead load (including hoist dead weight), and the design rated load shall not exceed $^{1}/_{600}$ of the span. Vertical inertia forces need not be considered in determining deflection. For interlocking cranes, the deflection shall not exceed $^{1}/_{1000}$ of the span.

NUM-III-3221.3 Girder Camber. Where girders are cambered, the recommended amount is equal to the bridge dead load deflection, plus $^{1}/_{2}$ of the deflection caused by the trolley dead load (including hoist dead weight), plus $^{1}/_{2}$ of the deflection caused by the design rated load. Girder camber and deflection shall be considered when determining vertical clearance.

NUM-III-3222 Wind Loads. Gantry structures shall be designed to withstand wind-loading conditions as specified by the owner. In the event no loads are specified, a load of 30 psf on the projected area, under nonoperating conditions, is to be used. For through-leg gantries, a check is to be made using a 5 psf wind loading with the lifted load at the end of the bridge.

Copyright ASME International
Provided by IHS under license with ASME
No reproduction or networking permitted without license from IHS
Not for Resale

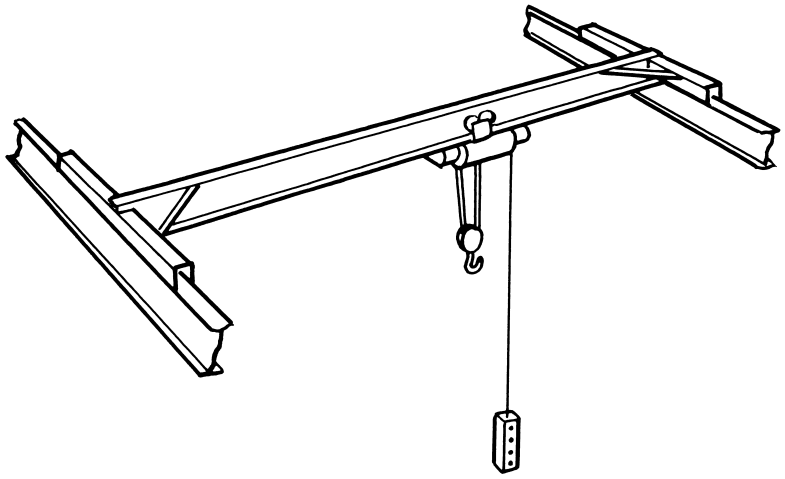

Fig. NUM-III-3100-1 Single-Girder Top-Running Crane

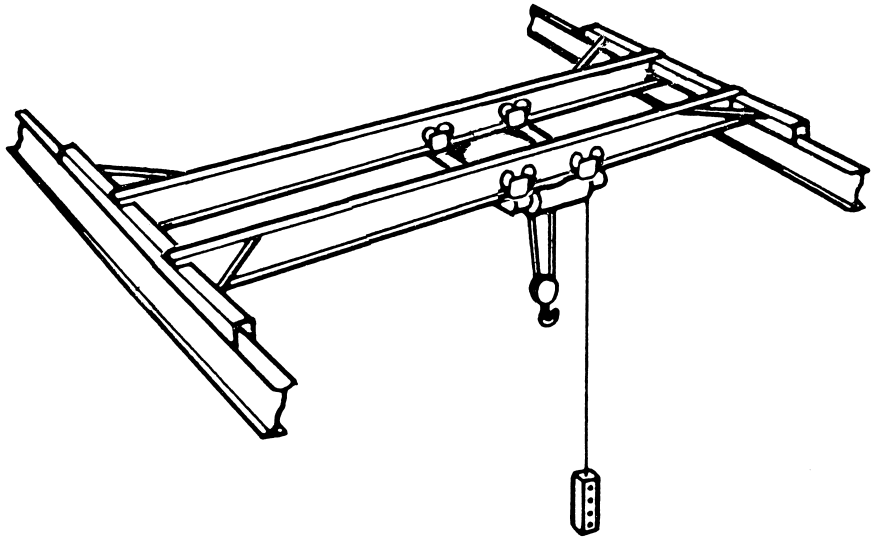

Fig. NUM-III-3100-2 Double-Girder Top-Running Crane With Underhung Trolley

NUM-III-3230 Components Design

NUM-III-3231 Girders, Beams, or Tracks. Girders may be standard rolled beams, patented shape track, or plate girders. Where necessary, auxiliary girders shall be used to support overhanging loads to minimize torsional moments on and lateral deflections of the girder. The analysis required for girders shall be in accordance with NUM-III-8200. On spans over 16 feet, the ratio of span to top flange width shall not exceed 60 to 1.

NUM-III-3232 End Trucks. The crane bridge shall be carried on end trucks designed to carry the rated load when lifted at one end of the crane bridge (closest approach). Load combinations and basic allowable stresses are to be in accordance with NUM-III-8213 and NUM-III-8231. The wheel base of the outermost wheels shall be $\frac{1}{8}$ of the span or greater.

End trucks may be of the rotating-axle or fixed-axle type. Provisions shall be made to prevent a drop of the crane not more than 1 in. in the case of axle failure. When appropriate, equalizer bridge trucks are

Copyright ASME International
Provided by IHS under license with ASME
No reproduction or networking permitted without license from IHS
Not for Resale

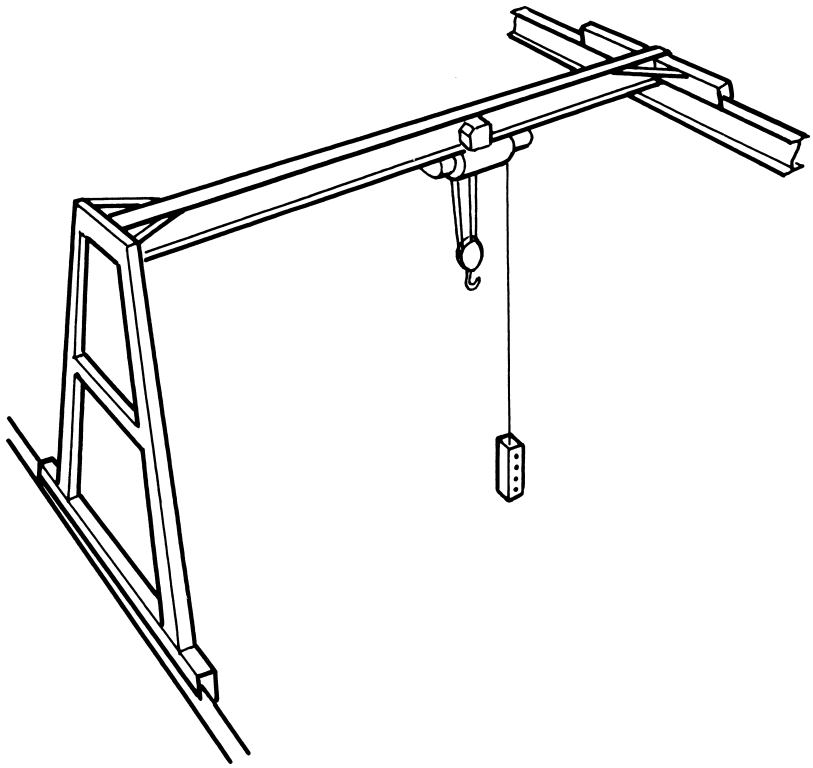

Fig. NUM-III-3100-3 Single-Girder Top-Running Semi-Gantry Crane

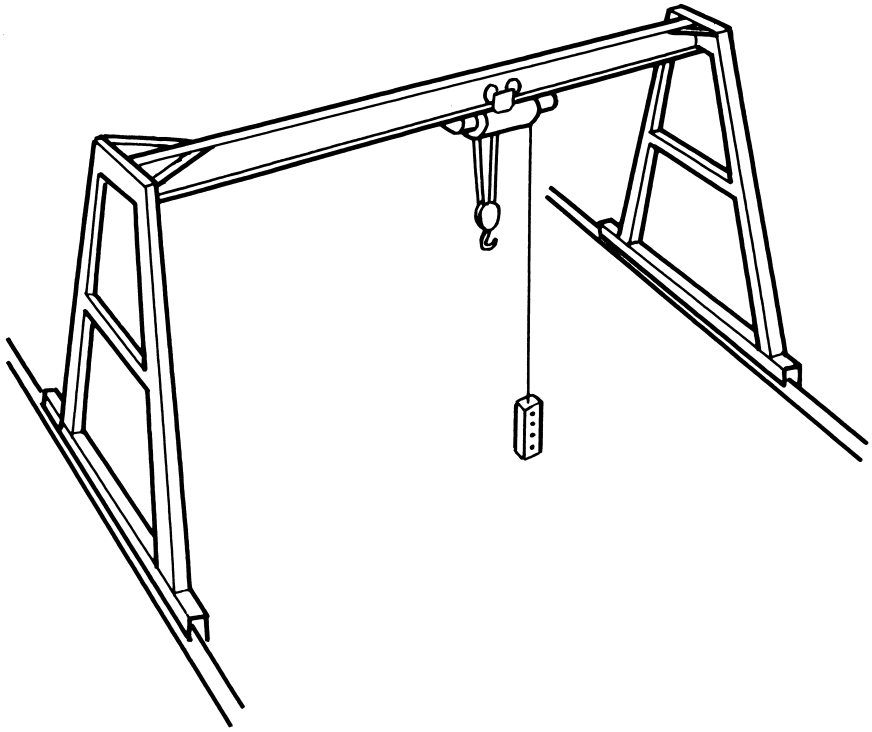

Fig. NUM-III-3100-4 Sinigle-Girder Top-Running Gantry Crane

Copyright ASME International
Provided by IHS under license with ASME
No reproduction or networking permitted without license from IHS
Not for Resale

to be incorporated to promote sharing of the bridge wheel loads. Equalizing pins are to be provided between equalizer truck and equalizer beams and/or rigid bridge structures. A rail sweep shall be provided in front of each outside wheel and shall project below the top of the runway rail. End trucks shall also be in accordance with applicable sections of NUM-III-8200.

NUM-III-3300 MECHANICAL

NUM-III-3310 General

This section covers the specific mechanical requirements and criteria for top-running bridge and gantry cranes. For other mechanical requirements and criteria common to all cranes, refer to NUM-III-8300.

NUM-III-3320 Bridge Drive

Bridge drive arrangements normally used with top-running bridge cranes are illustrated in Figs. NUM-III-3320-1, NUM-III-3320-2, and NUM-III-3320-3. A top-running bridge has a minimum of four wheels and shall utilize a drive arrangement where at least one wheel is driven on each end truck.

(a) A-1 Drive. The motor is located near the center of the bridge span and is connected to a self-contained gear reduction unit, also located near the span center, which in turn is connected to a set of line shafts that are connected to the wheel axles.

(b) A-2 Drive. The motor is located near the center of the bridge span and connected by a flexible coupling to a self-contained gear reduction unit, also located near the span center, which in turn is connected to a set of line shafts by solid or semi-flexible couplings. Each line shaft is connected to a pinion at the end truck that meshes with the drive gear. Connecting couplings between line shaft and pinion are semi-flexible. All other couplings, if required, are of the solid type.

(c) A-4 Drive. Two mechanically independent drive arrangements are provided, one unit at each end truck of the bridge. Motors are connected to the gear reduction units, which in turn are connected to the wheel axles.

NUM-III-3321 Travel Drives for Gantry Cranes. For travel drives on gantry cranes, the number of driven wheels shall be selected based on crane acceleration rates to prevent wheel skidding.

NUM-III-3322 Gantry Crane Drive Brakes. Each motorized drive on gantry cranes shall be provided with a suitable brake and sized as described in NUM-III-8300.

NUM-III-3330 Underhung Trolley

Underhung trolleys are covered by NUM-III-7700. If the trolley is top running, refer to NOG-1 for entire crane.

NUM-III-3331 Underhung Trolley Drive. Trolley drives for single-girder bridge cranes shall be in accordance with NUM-III-7741. Underhung trolley drives for double-girder bridge cranes shall be driven on both sides similar to bridge drives and in accordance with NUM-III-8300.

NUM-III-3340 Hoist

The hoist shall be in accordance with Section NUM-III-7000.

NUM-III-3400 ELECTRICAL

NUM-III-3410 General

(a) Except as noted under (b) below, the following information applies to top-running bridge and gantry cranes that have an electric-motor-operated bridge.

(b) For top-running bridge and gantry cranes that do not have an electric-motor-operated bridge but that utilize either an electrically operated hoist or electrically operated trolley, the information listed under the following headings will still apply: Disconnects and Protective Devices, Operator Stations and Controllers, Current Conducting Systems, and Wiring Materials and Methods.

NUM-III-3420 Electrical Components

NUM-III-3421 Crane Controls. Crane controls shall meet the criteria of NUM-III-8421.

NUM-III-3422 Motors. Traverse drive motors for an electric-motor-operated bridge shall meet the criteria of NUM-III-8422, with motor sizing in accordance with NUM-III-8422.5.

NUM-III-3423 Brakes

(a) An electric-motor-operated bridge shall be furnished with either a noncoasting mechanical drive, or spring-set, friction-type brakes for each traverse drive motor.

Copyright ASME International
Provided by IHS under license with ASME
No reproduction or networking permitted without license from IHS
Not for Resale

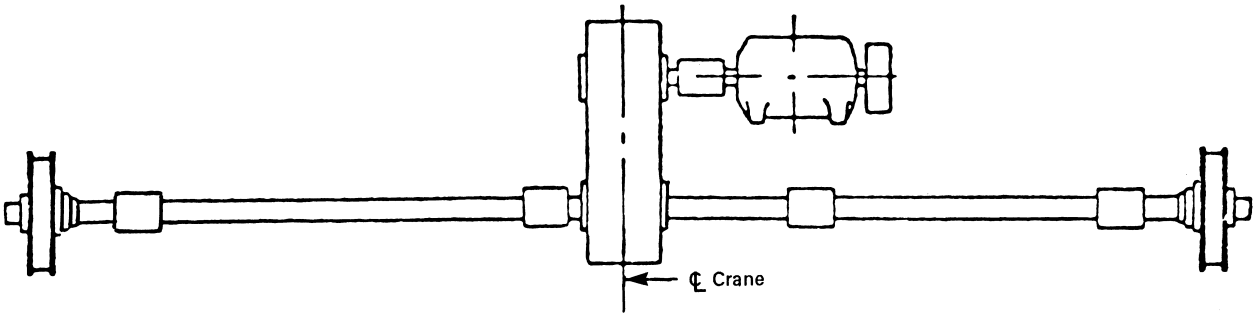

Fig. NUM-III-3320-1 Arrangement of Crane Bridge Drives (A-1 Drive)

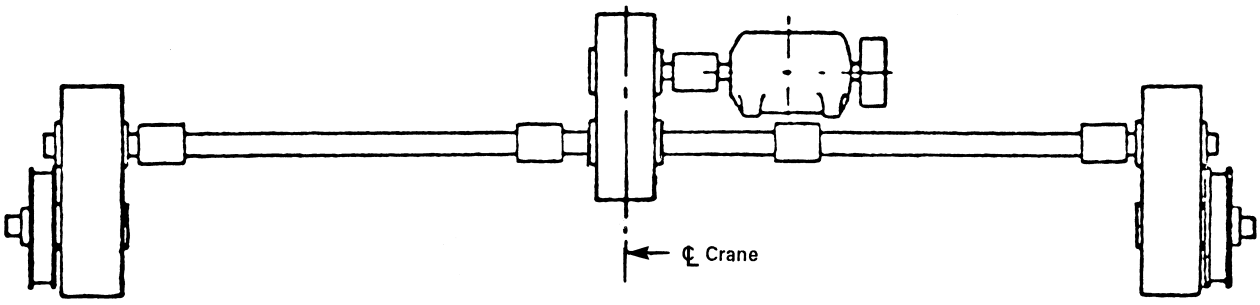

Fig. NUM-III-3320-2 Arrangement of Crane Bridge Drives (A-2 Drive)

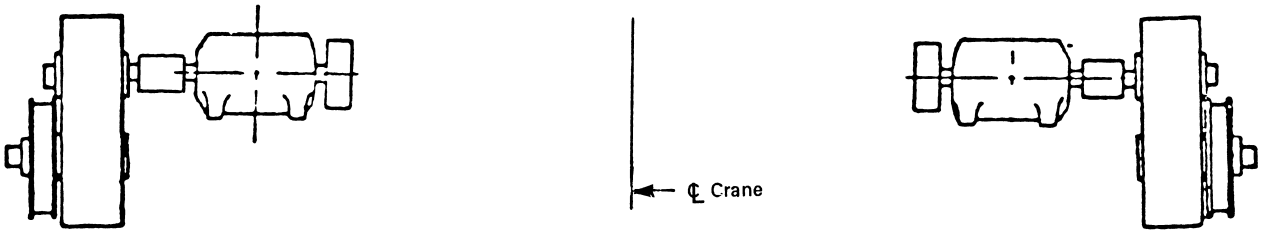

Fig. NUM-III-3320-3 Arrangement of Crane Bridge Drives (A-4 Drive)

(b) A noncoasting mechanical drive shall be capable of stopping the motion of the bridge, within a distance in feet, equal to 10% of the full load speed in feet per minute, when traveling at full speed with rated load.

(c) Spring-set, friction-type brakes shall be in accordance with NUM-III-8423.

NUM-III-3424 Disconnects and Protective Devices. Disconnects and protective devices shall be provided in accordance with NUM-III-8424.

NUM-III-3425 Operator Stations and Controllers

(a) The type of operator station and its location shall be specified by the owner.

(b) The location of the pendant push-button station controllers shall be one of the following:

(1) suspended from the hoist and trolley,

(2) suspended from a festooned messenger track system along the bridge span,

Copyright ASME International
Provided by IHS under license with ASME
No reproduction or networking permitted without license from IHS
Not for Resale

(3) suspended from a single point off the bridge, or

(4) remote-mounted off the crane.

(c) A crane operator station of any type shall meet the criteria of NUM-III-8425.

NUM-III-3426 Electrical Enclosures. Electrical enclosures shall be in accordance with the criteria of NUM-III-8426, suitable for the owner-specified environmental conditions of service.

NUM-III-3427 Current Conductor Systems

(a) The type and location of runway system conductors shall be specified by the owner.

(b) All current conductor systems shall meet the criteria of NUM-III-8427.

NUM-III-3428 Warning Devices. Warning device information and criteria shall be in accordance with NUM-III-8428.

NUM-III-3429 Auxiliary Electrical Equipment. Auxiliary electrical equipment information and criteria, such as for travel limit switches, shall be in accordance with NUM-III-8429.

NUM-III-3430 Wiring Materials and Methods

Wiring materials and methods shall meet the criteria of NUM-III-8430.

NUM-III-3500 INSPECTION AND TESTING

NUM-III-3510 Performance

Perform inspection and testing of top-running bridge and gantry cranes in accordance with NUM-III-8500, as applicable.

Copyright ASME International
Provided by IHS under license with ASME
No reproduction or networking permitted without license from IHS
Not for Resale

Section NUM-III-4000
Traveling Wall Cranes

NUM-III-4100 DESCRIPTION

In accordance with the introduction for Type III equipment defined in Section NUM-III-1000, Section NUM-III-4000 applies to traveling wall cranes whose vertical frame is supported on trucks that operate on tracks or rails by manual operation or power operation. The jib boom can be single girder or multiple girder, top braced, under braced, or full cantilever, and is usually fixed (nonrotating) to the vertical frame.

On single-girder and multiple-girder booms, the jib boom may be a patented shape, a structural shape, a reinforced patented or structural shape, or a fabricated section.

On single-girder booms, overhead hoists of the underhung type (covered in Section NUM-III-7000) may be rigidly suspended or trolley suspended from the jib boom. If the trolley is suspended, the trolley will operate on the bottom flange of the jib boom.

On multiple-girder booms, overhead hoists of the underhung type (covered in Section NUM-III-7000) may be rigidly suspended or trolley suspended from the jib boom girders. If the trolley is suspended, the trolley may operate on the bottom flange of the boom girders or on fixed rails or track attached to the top flange or surface of the boom girders. (See Figs. NUM-III-4100-1A and NUM-III-4100-1B.)

NUM-III-4200 STRUCTURAL

NUM-III-4210 General

This section covers the structural requirements and design criteria specific to type III traveling wall cranes as described in NUM-III-4100. For other structural requirements and criteria, refer to NUM-III-8200.

NUM-III-4220 Design Criteria

NUM-III-4221 Allowable Deflections

NUM-III-4221.1 Boom Deflections. The maximum vertical deflection of the boom and its end tie structure produced by the boom dead load, the trolley dead load (including the hoist dead weight), and the design rated load shall not exceed $^{1}/_{600}$ of the span. When a motorized trolley is specified, the allowable vertical deflection may be increased up to $^{1}/_{450}$ of the span. Impact shall not be considered in determining deflection.

NUM-III-4230 Component Design

NUM-III-4231 Booms. Crane booms may be fabricated with standard rolled beams and reinforced with angles, channels, or plates as necessary. Auxiliary members may be of standard shapes, structural tube, or fabricated plates. Structural analysis shall be in accordance with NUM-III-8200.

NUM-III-4232 End Tie Structure

(a) End tie structure may be fabricated with standard rolled shapes, structural tube, or plate and reinforced with the same. Structural analysis shall be consistent with the requirements of NUM-III-8200.

(b) Loads induced from drive mechanisms, acceleration and braking, motor stall, bumper stops, and varying loads from a swinging boom, where used, shall be considered.

NUM-III-4233 Braces and Secondary Members. Braces and secondary members may be fabricated of standard rolled beams, angles, tees, rods, structural tube, or other structural shapes. They shall be analyzed in accordance with NUM-III-8200.

NUM-III-4240 Design Requirements for Wall Crane Supports

(a) The manufacturer shall provide general arrangement drawings to define all reactions and special attaching considerations at all the tie points to the supporting structure. The general arrangement drawings shall specify rail alignment tolerances applicable to the design.

(b) The owner shall analyze the supporting structure for all loading conditions imposed by the wall crane and any auxiliary system.

--`,,```,,,,````-`-`,,`,,`,`,,`---

Copyright ASME International
Provided by IHS under license with ASME
No reproduction or networking permitted without license from IHS

Not for Resale

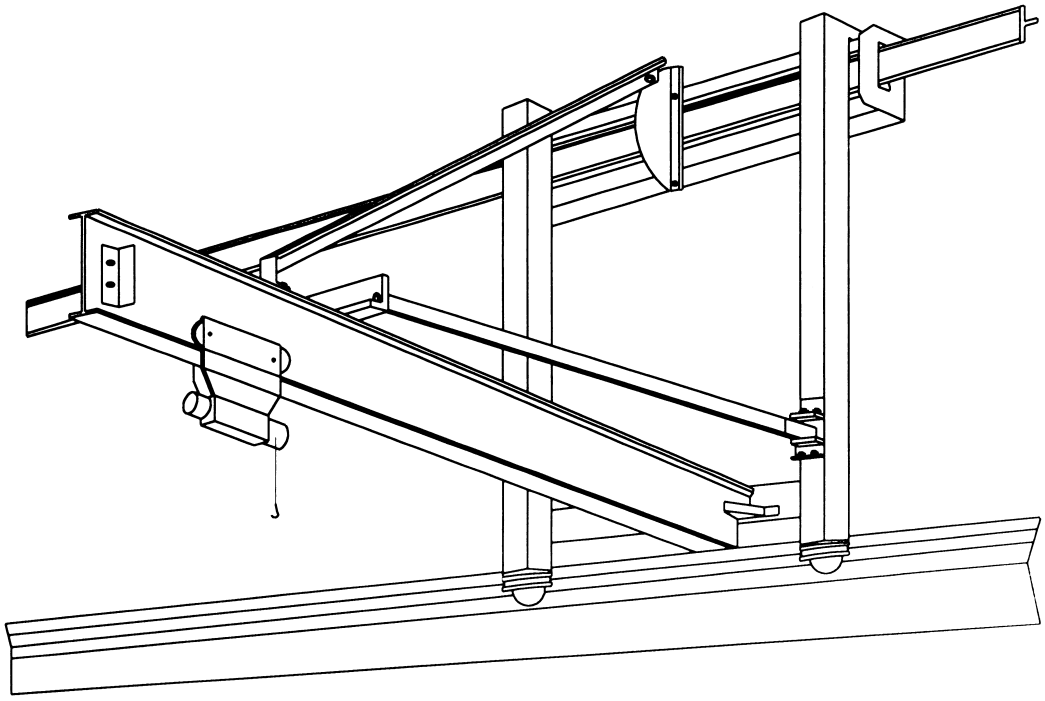

Fig. NUM-III-4100-1A Traveling Wall Crane

NUM-III-4300 MECHANICAL

NUM-III-4310 General

This section covers the specific mechanical requirements and criteria for traveling wall cranes. For other mechanical requirements and criteria common to all cranes, refer to NUM-III-8300.

NUM-III-4320 Truck Assembly

NUM-III-4321 Wall Crane Configuration. The wall crane shall have vertical and horizontal end trucks and a cantilevered girder. The driven vertical truck may be top running with wheels on standard rails or underhung from the lower flange of an I beam or patented track. The horizontal reaction idler trucks may be constructed similar to the vertical truck; top running or under running. [See Figs. NUM-III-4100-1(a) and NUM-III-4100-1(b).]

NUM-III-4322 End Truck Assembly. For the truck assembly drive, if the vertical wheels are top running, a minimum of two wheels shall be driven. If the vertical wheels are under running, a minimum of two pairs of wheels shall be driven.

NUM-III-4322.1 Crane Drive Brakes. Each motorized drive shall be provided with a suitable brake, sized as described in NUM-III-8300.

NUM-III-4330 Underhung Trolley

Underhung trolleys are covered by NUM-III-7700. If the trolley is top running, refer to NOG-1 (for trolley design only).

NUM-III-4331 Underhung Trolley Drive. Trolley drives for single-girder bridge cranes shall be in accordance with NUM-III-7741. Underhung trolley drives for double-girder bridge cranes shall be driven on both sides similar to bridge drives and shall be in accordance with NUM-III-8300.

NUM-III-4340 Hoist

The hoist shall be in accordance with Section NUM-III-7000.

NUM-III-4400 ELECTRICAL

NUM-III-4410 General

(a) Except as noted under (b) below, the following

Copyright ASME International
Provided by IHS under license with ASME
No reproduction or networking permitted without license from IHS Not for Resale

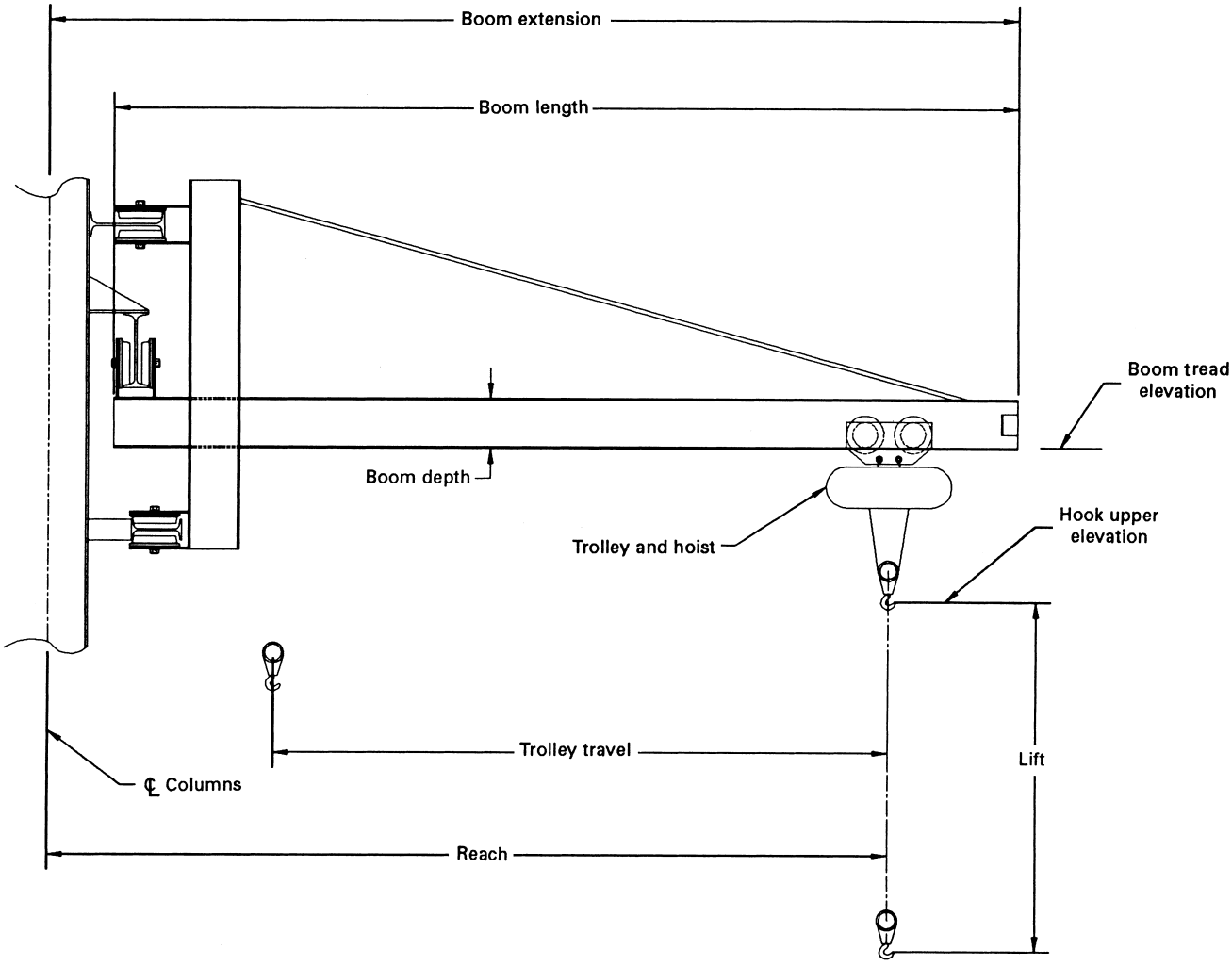

Fig. NUM-III-4100-1B Traveling Wall Crane

Copyright ASME International
Provided by IHS under license with ASME
No reproduction or networking permitted without license from IHS
Not for Resale

information applies to traveling wall cranes that have an electric-motor-operated crane traverse motion.

(b) For traveling wall cranes that do not have an electric-motor-operated crane traverse motion, but that utilize either an electrically operated hoist or electrically operated trolley, the information listed under the following headings will still apply: Disconnects and Protective Devices, Operator Stations and Controllers, Current Conducting Systems, and Wiring Materials and Methods.

NUM-III-4420 Electrical Components

NUM-III-4421 Crane Controls. Crane controls shall meet the criteria of NUM-III-8421.

NUM-III-4422 Motors. Traverse drive motors for an electric-motor-operated wall jib shall meet the criteria of NUM-III-8422, with motor sizing in accordance with NUM-III-8422.5.

NUM-III-4423 Brakes

(a) An electric-motor-operated wall crane shall be furnished with either a noncoasting mechanical drive, or spring-set, friction-type brakes for each traverse drive motor.

(b) A noncoasting mechanical drive shall be capable of stopping the motion of the wall crane, within a distance in feet, equal to 10% of the full load speed in feet per minute, when traveling at full speed with rated load.

(c) Spring-set, friction-type brakes shall be in accordance with NUM-III-8423.

NUM-III-4424 Disconnects and Protective Devices. Disconnects and protective devices shall be provided in accordance with NUM-III-8424.

NUM-III-4425 Operator Stations and Controllers

(a) The type of operator station and its location shall be specified by the owner.

(b) The location of the pendant push-button station controllers shall be one of the following:

(1) suspended from the hoist and trolley;

(2) suspended from a festooned messenger track system along the wall crane's boom;

(3) suspended from a single point off the wall crane's vertical frame or boom; or

(4) remote-mounted off the crane.

(c) A crane operator station of any type shall meet the criteria on NUM-III-8425.

NUM-III-4426 Electrical Enclosures. Electrical enclosures shall be in accordance with the criteria of NUM-III-8426, suitable for the owner-specified environmental conditions of service.

NUM-III-4427 Current Conductor Systems

(a) The type and location of runway system conductors shall be specified by the owner.

(b) All current conductor systems shall meet the criteria of NUM-III-8427.

NUM-III-4428 Warning Devices. Warning device information and criteria shall be in accordance with NUM-III-8428.

NUM-III-4429 Auxiliary Electrical Equipment. Auxiliary electrical equipment information and criteria, such as for travel limit switches, shall be in accordance with NUM-III-8429.

NUM-III-4430 Wiring Materials and Methods

Wiring materials and methods shall meet the criteria of NUM-III-8430.

NUM-III-4500 INSPECTION AND TESTING

NUM-III-4510 Performance

Perform inspection and testing of traveling wall cranes in accordance with NUM-III-8500, as applicable, and the following (to be performed after installation at site):

(a) Check the levelness and alignment of the wall crane, without load.

(b) Check deflection of boom with crane loaded to rated capacity and load positioned at maximum distance from support rails/flanges. Deflection shall not exceed the maximum specified in NUM-III-4200 or by the owner. Verify that the trolley does not drift along the boom at rated load.

(c) Verify proper alignment and engagement of all wheels with support rails/flanges and proper operation through all modes of travel during rated load and no load conditions.

Copyright ASME International
Provided by IHS under license with ASME
No reproduction or networking permitted without license from IHS
Not for Resale

Section NUM-III-5000
Jib Cranes

NUM-III-5100 DESCRIPTION

In accordance with the introduction for Type III equipment defined in Section NUM-III-1000, Section NUM-III-5000 applies to the following:

(a) Wall-Mounted Jib Cranes. Wall-mounted jib cranes of the top-braced, under-braced, or full-cantilever type. The jib boom may be fixed or have partial rotation and can be manually or power operated. The jib boom may be a patented shape, a structural shape, a reinforced patented or structural shape, or a fabricated section. Overhead hoists of the underhung type (covered in Section NUM-III-7000) may be rigidly suspended or trolley suspended from the jib boom. If trolley suspended, the trolley will operate on the bottom flange of the jib boom. (See Fig. NUM-III-5100-1.)

(b) Free-Standing Pillar Jib Cranes. Free-standing pillar jib cranes of the base-mounted and insert-mounted type. The jib boom may be fixed or have partial or full 360 deg rotation (specified degree of overlap or continuous) and can be manually or power operated. Jib boom, hoists, and trolleys are the same as described in para. NUM-III-5100(a). (See Fig. NUM-III-5100-2.)

(c) Mast-Type Jib Cranes. Mast-type jib cranes of the top-braced, under-braced, or full-cantilever type. The jib boom may be fixed or have partial or full 360 deg rotation (specified degree of overlap or continuous) and can be manually or power operated. Jib boom, hoists, and trolleys are the same as described in para. NUM-III-5100(a). (See Fig. NUM-III-5100-3.)

NUM-III-5200 STRUCTURAL

NUM-III-5210 General

This section covers the structural requirements and design criteria specific to type III jib cranes as described in NUM-III-5100. For other structural requirements and criteria, refer to NUM-III-8200.

NUM-III-5220 Design Criteria

NUM-III-5221 Allowable Deflections and Cambers

NUM-III-5221.1 Jib Boom Deflection. The maximum vertical deflection of the boom produced by the boom dead load, the trolley dead load (including the hoist dead weight), and the design rated load shall not exceed $^{1}/_{600}$ of the span. When a motorized trolley is specified, the allowable vertical deflection may be increased up to $^{1}/_{450}$ of the span. Impact shall not be considered in determining deflection.

NUM-III-5221.2 Miscellaneous Structure Deflection. In the case of jib cranes that are self supporting, (such as free standing or mast type), the entire structure shall not produce a deflection greater than that given in para. NUM-III-5221.1 under jib boom deflection.

NUM-III-5230 Components Design

NUM-III-5231 Jib Booms, Beams, or Tracks. Jib booms may be standard rolled beams and either reinforced with angles, channels, or plates. Where necessary, auxiliary members shall be used to act as bracing when a full cantilever is not utilized.

The analysis required for jib booms shall be in accordance with NUM-III-8200.

NUM-III-5232 Columns, Posts, or Masts. Columns may be standard rolled beams, plate girders, structural tube, or structural pipe, either reinforced with angles, channels, or plates. The analysis will be as stated for jib booms in para. NUM-III-5231.

NUM-III-5233 Braces and Secondary Members. Braces and secondary members may be fabricated of standard rolled beams, angles, tees, rods, structural tube, or other structural shapes. They shall be analyzed in accordance with NUM-III-8200.

Copyright ASME International
Provided by IHS under license with ASME
No reproduction or networking permitted without license from IHS
Not for Resale

NUM-III-5240 Design Requirements for Jib Crane Supports

(a) All attachment point locations and load reactions to the interfacing structures and foundations shall be provided by the manufacturer.

(b) The owner shall analyze the interfacing structures and foundations for all loading conditions the jib crane may impose through its full rotational movement.

(c) Interfacing structures and foundations shall be designed such that the maximum resisting moment against overturning (based upon dead load plus rated load) will provide a safety factor of 2.

(d) For the purposes of sizing baseplates of jib cranes attached to concrete, the manufacturer shall assume a concrete ultimate compressive strength of 2000 psi unless otherwise specified by the owner.

NUM-III-5300 MECHANICAL

NUM-III-5310 General

This section covers the specific mechanical requirements and criteria for jib cranes. For other mechanical requirements and criteria common to all cranes, refer to NUM-III-8300.

(a) If the jib crane is subject to damage due to wind loading, a means shall be provided to "tie down" or restrain the boom during storage.

(b) If the jib crane's boom is located 16 ft or more above the operating floor, or if the jib crane is subject to wind loading, the jib boom's rotation should be hand-gear powered or motorized.

NUM-III-5320 Underhung Trolley

Underhung trolleys are covered by NUM-III-7700.

NUM-III-5321 Underhung Trolley Drive. Trolley drives for jib cranes shall be in accordance with NUM-III-7741.

NUM-III-5330 Hoist

The hoist shall be in accordance with NUM-III-7000.

NUM-III-5340 Wall-Bracket-Type Jib Cranes

Rotational stops for the jib boom shall be specified by the owner, if required.

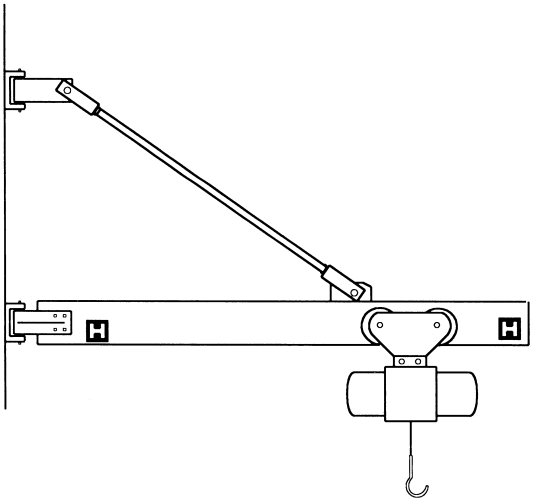

(a) Top-Braced Wall-Mounted Jib Crane

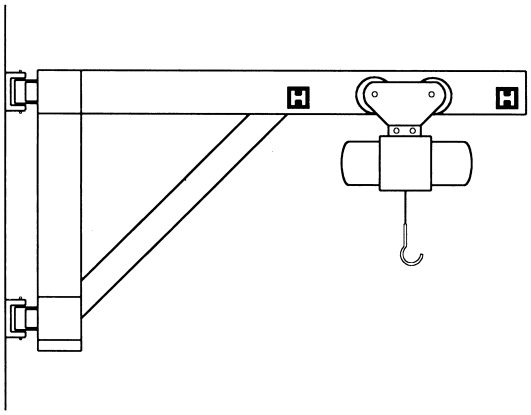

(b) Under-Braced Wall-Mounted Jib Crane

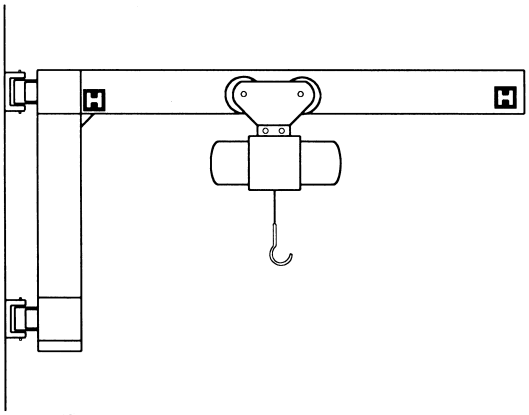

(c) Full-Cantilevered Wall-Mounted Jib Crane

Fig. NUM-III-5100-1 Wall-Mounted Jib Cranes

Copyright ASME International
Provided by IHS under license with ASME
No reproduction or networking permitted without license from IHS
Not for Resale

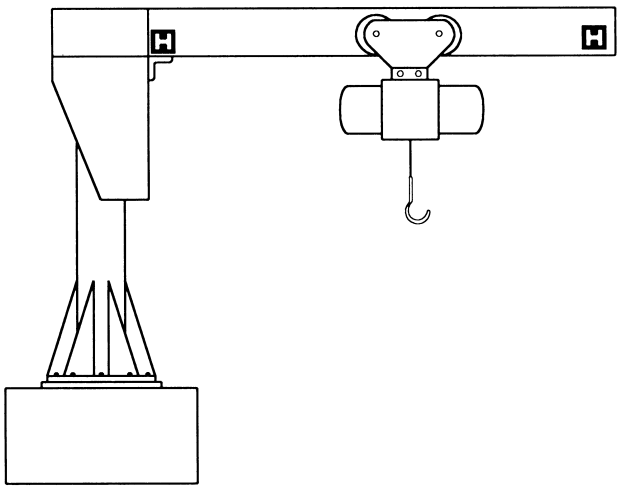

(a) Base-Mounted Pillar Jib Crane

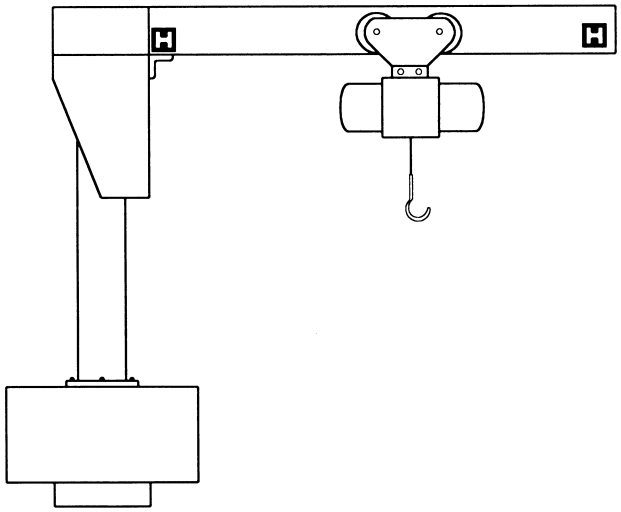

(b) Insert-Mounted Pillar Jib Crane

Fig. NUM-III-5100-2 Free-Standing Pillar Jib Cranes

Copyright ASME International
Provided by IHS under license with ASME
No reproduction or networking permitted without license from IHS
Not for Resale

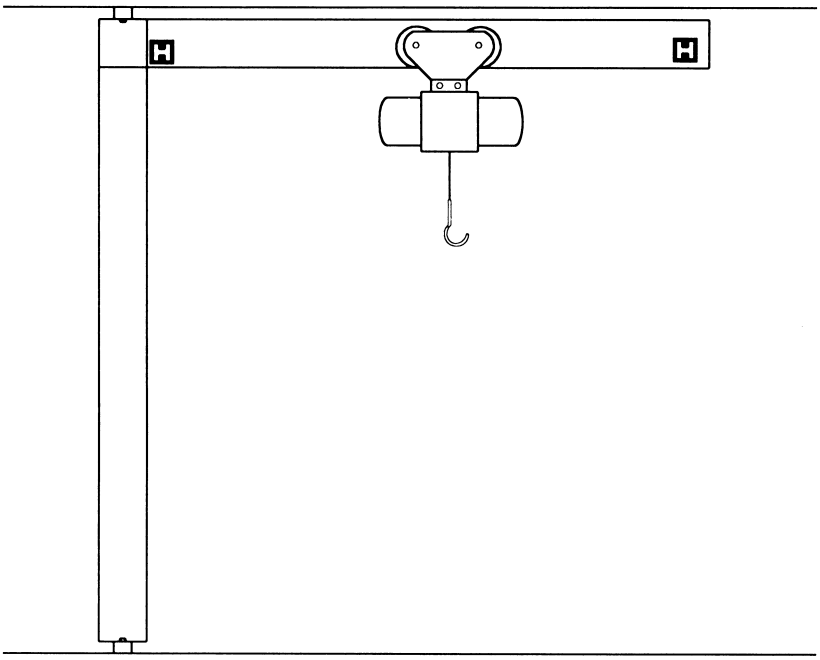

Fig. NUM-III-5100-3 Mast-Type Jib Cranes

NUM-III-5350 Free-Standing or Mast-Type Jib Cranes

Jib boom rotation shall be limited unless the power service connection provides for continuous rotation.

NUM-III-5400 ELECTRICAL

NUM-III-5410 General

(a) Except as noted under (b) below, the following information applies to jib cranes that have motor-operated boom rotation.

(b) For jib cranes that do not have a motor-operated boom, but that utilize either an electrically operated hoist or electrically operated trolley, the information listed under the following headings will still apply: Disconnects and Protective Devices, Operator Stations and Controllers, Current Conducting Systems, and Wiring Materials and Methods.

NUM-III-5420 Electrical Components

NUM-III-5421 Crane Controls

(a) Crane controls for a motorized boom shall have a "cushioned start" device or other controlled acceleration means.

(b) Crane controls of any type shall meet the criteria of NUM-III-8421.

NUM-III-5422 Motors. A jib slew drive motor for a motorized boom shall meet the criteria of NUM-III-8422, except that the motor rating, which is basically the mechanical horsepower with consideration for the effect of control, shall be sized as follows for indoor and outdoor applications.

(a) Slew Drive Motor-Size Selection, Indoor Cranes. The jib slew drive motor shall be selected so that the horsepower rating is not less than that given by the following formula:

$$HP = \frac{I_o(N^3)}{(7 \times 10^6)E\ K_t} \quad (1)$$

where, referring to Fig. NUM-III-5422-1:

E = system efficiency
N = rotational speed, revolutions per minute
RL = maximum load radius, feet
WL = rated load plus the hoist weight, pounds
I_o = load moment of inertia = $WL \times RL^2$
K_t = torque factor, which is the equivalent steady-state torque relative to rated motor torque, which results in accelerating up to rated motor rpm in the same time as the actual

Copyright ASME International
Provided by IHS under license with ASME
No reproduction or networking permitted without license from IHS
Not for Resale

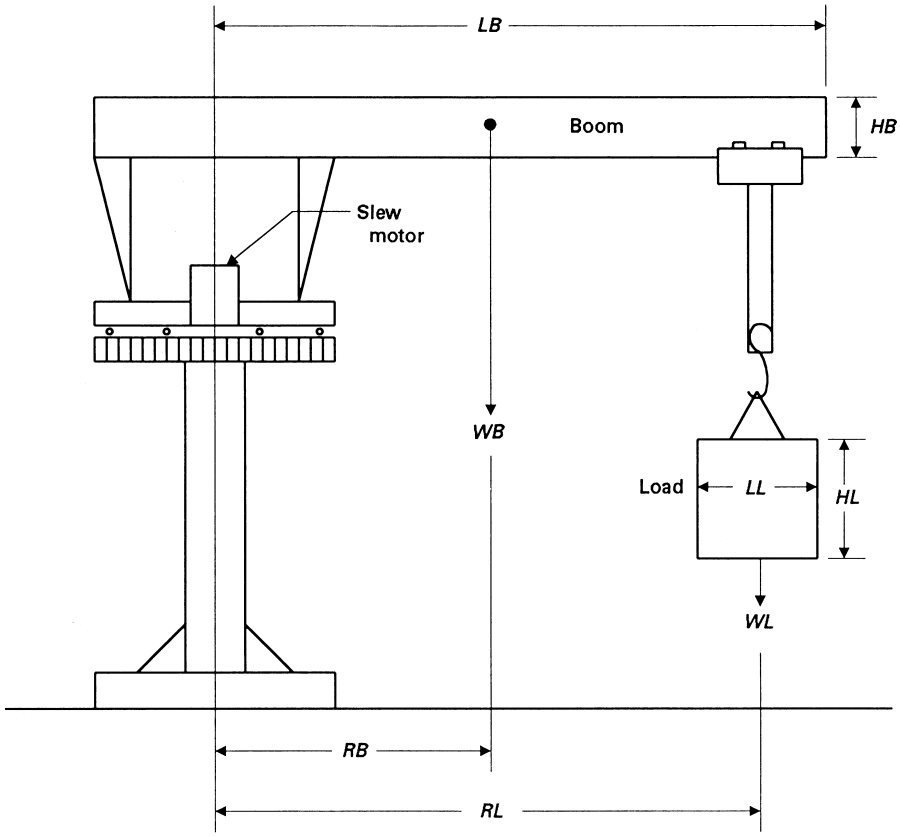

Fig. NUM-III-5422-1 Slew Drive Motor-Size Selection

variable torque speed characteristic of the motor and control characteristic used. (See Table NUM-III-8422.4-5 for standard values of K_t.)

(b) Slew Drive Motor-Size Selection, Outdoor Cranes. The jib slew drive motor shall be selected so that the horsepower rating is not less than that given by the following formula:

$$\text{The Total Required Horsepower} = HP + HPwind$$

where

$$HP = \frac{I_o(N^3)}{(7 \times 10^6)E\ K_t}$$

as specified in (a) above

$$HPwind = \frac{TN}{5250\ E\ K_t} \qquad (2)$$

and where, referring to Fig. NUM-III-5422-1:

$HPwind$ = horsepower required to overcome wind load

$$T = PSF\ [(A_{boom})(RB) + (A_{load})(RL)]$$

where

HB = height of boom, ft
HL = height of load, ft
LB = length of boom, ft
LL = length of load, ft
RB = radius to centroid of projected area of boom, ft
= $LL \times HL$
PSF = operating wind load, lb per square ft (use 5 lb/ft^2 if not otherwise specified by the owner)
= $LB \times HB$
A_{boom} = projected area of boom, square ft
A_{load} = projected area of load, square ft

RL, N, E, and K_t are defined above under para. (a).

(c) See NUM-C-2100 for a jib slew drive sample

Copyright ASME International
Provided by IHS under license with ASME
No reproduction or networking permitted without license from IHS
Not for Resale

calculation and NUM-C-2200 for derivation of simplified horsepower formula.

NUM-III-5423 Brakes

(a) A motorized boom shall be furnished with either a noncoasting mechanical drive or a spring-set, friction-type brake.

(b) A noncoasting mechanical drive shall be capable of stopping the motion of the jib boom, within a distance in revolutions, equal to 10% of the full load speed in revolutions per minute, when traveling at full speed with rated load.

(c) A spring-set, friction-type brake shall have a torque rating of at least 50% of the rated motor torque and shall meet the additional criteria of NUM-III-8423.

NUM-III-5424 Disconnects and Protective Devices. Disconnects and protective devices shall be provided in accordance with NUM-III-8424.

NUM-III-5425 Operator Stations and Controllers

(a) The type of operator station and its location shall be specified by the owner.

(b) The location of the push-button station controllers shall be one of the following:

(1) suspended from the hoist and trolley;

(2) suspended from a festooned messenger track system along the boom;

(3) suspended from a single point off the jib boom, or suspended off the jib hood for a self-supported jib;

(4) mounted on the mast of a self-supported jib; or

(5) remote-mounted off the crane.

(c) A crane operator station of any type shall meet the criteria on NUM-III-8425.

NUM-III-5426 Electrical Enclosures. Electrical enclosures shall be in accordance with the criteria of NUM-III-8426, suitable for the owner-specified environmental conditions of service.

NUM-III-5427 Current Conductor Systems

(a) Unless otherwise specified by the owner, the main power conductors to a motorized jib or manual jib with either an electrically operated hoist or electrically operated trolley shall be by the owner.

(1) Location of the main power supply interface shall be specified by the owner.

(2) For a self-supporting jib, the main power supply interface is normally identified as either a top entry or bottom entry system.

(b) All current conductor systems shall meet the criteria of NUM-III-8427, with jib boom conductors meeting the same criteria as that specified for bridge systems.

NUM-III-5428 Warning Devices. Warning device information and criteria shall be in accordance with NUM-III-8428.

NUM-III-5429 Auxiliary Electrical Equipment. Auxiliary electrical equipment information and criteria, such as for travel limit switches, shall be in accordance with NUM-III-8429.

NUM-III-5430 Wiring Materials and Methods

Wiring materials and methods shall meet the criteria of NUM-III-8430.

NUM-III-5500 INSPECTION AND TESTING

NUM-III-5510 Performance

Perform inspection and testing of jib cranes in accordance with NUM-III-8500, as applicable, and the following (to be performed after installation at site):

(a) Check the levelness and alignment of the boom or jib, without load.

(b) Check deflection of boom with rated load applied at maximum distance from wall, mast, or column support. Deflection shall not exceed the maximum specified in NUM-III-5200. Verify that the trolley does not drift along the boom at rated load.

(c) Verify proper rotation of the jib throughout its full range of travel with the rated load applied at the maximum distance from the wall, mast, or column support as permitted by the test load configuration. Verify that the amount of boom drift under these conditions is acceptable.

Copyright ASME International
Provided by IHS under license with ASME
No reproduction or networking permitted without license from IHS
Not for Resale

Section NUM-III-6000
Monorail Systems

NUM-III-6100 DESCRIPTION

In accordance with the introduction for Type III equipment defined in Section NUM-III-1000, Section NUM-III-6000 applies to single-track monorail systems including curves, switches, transfer devices, lift and drop sections, and associated equipment. (See Figs. NUM-III-6100-1 through NUM-III-6100-6). Monorail equipment may be manually operated, power operated, or automatic and may be controlled by floor operation, cab operation, pulpit operation, or remote operation. For monorail systems, the trolley operates on the bottom flange of the track. The monorail track may be either a patented shape, a structural shape, a reinforced patented or structural shape, or a fabricated section.

NUM-III-6200 STRUCTURAL

NUM-III-6210 General

This section covers the structural requirements and design criteria specific to Type III monorail systems as described in NUM-III-6100. For other structural requirements and criteria, refer to NUM-III-8200.

NUM-III-6220 Design Criteria

NUM-III-6221 Allowable Deflections and Cambers

NUM-III-6221.1 Miscellaneous Structure Deflection. Deflections of components such as end ties, end trucks, and auxiliary beams shall not impair the functions for which they were designed or cause any attachments to the crane to become dislodged or leave the crane.

NUM-III-6221.2 Monorail Beam Deflection. The maximum vertical deflection of the monorail beam produced by the beam dead load, the trolley dead load (including the hoist dead weight), and the design rated load shall not exceed $^{1}/_{600}$ of the span between supports. Impact need not be considered in determining deflection.

NUM-III-6221.3 Monorail Camber. Where monorail beams are cambered, the recommended amount of camber is equal to the beam dead load deflection, plus $^{1}/_{2}$ of the deflection caused by the trolley dead load (including hoist dead weight), plus $^{1}/_{2}$ of the deflection caused by the design rated load. Monorail beam camber and deflection shall be considered when determining vertical clearance.

NUM-III-6222 Inertia Forces From Drives. The inertia forces occur during acceleration or deceleration of trolley motion and depend on the driving and braking torques applied by the drive units and brakes during each cycle. These loads are longitudinal to the monorail only. This load shall be taken as 10% of the combined trolley dead load and the rated load.

NUM-III-6223 Allowable Stresses and Wheel Loads

NUM-III-6223.1 Lower Load-Carrying (Tension) Flange. The allowable stress in the lower load-carrying (tension) flange shall be 20% of the minimum ultimate strength of the material used.

NUM-III-6223.2 Compression Flange. The allowable stress in the compression flange shall be determined per NUM-III-8200.

NUM-III-6223.3 Allowable Wheel Loads. Allowable wheel loads shall take into account the stress imposed on the lower load-carrying flange when a carrier transfers from one track to another. Where track sections are diagonally cut at transfers, the wheel loads shall be limited by the stress imposed on the lower load-carrying flange.

NUM-III-6224 Monorail Supports

(a) Monorail beams shall be fastened to a supporting structure.

(b) All clamps, hanger rods, bolts, or other suspension fittings and supporting structures shall be designed to withstand the loads and forces imposed by the cranes or carriers.

Copyright ASME International
Provided by IHS under license with ASME
No reproduction or networking permitted without license from IHS
Not for Resale

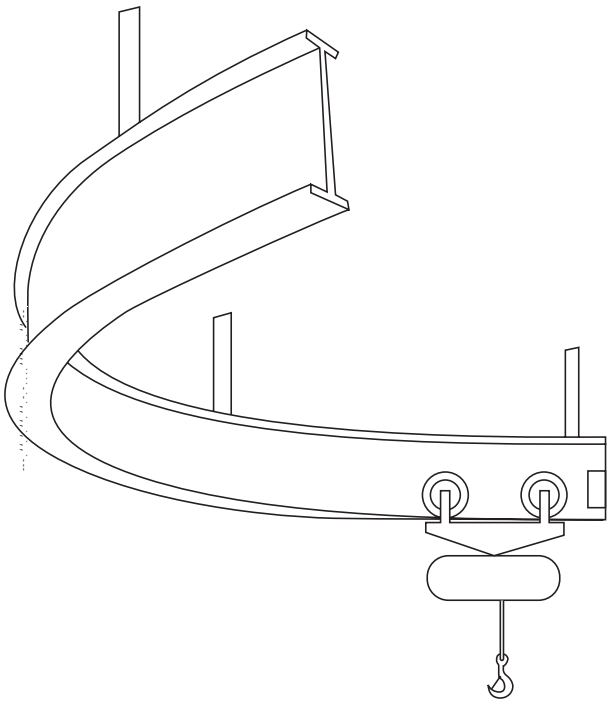

Fig. NUM-III-6100-1 Monorail System

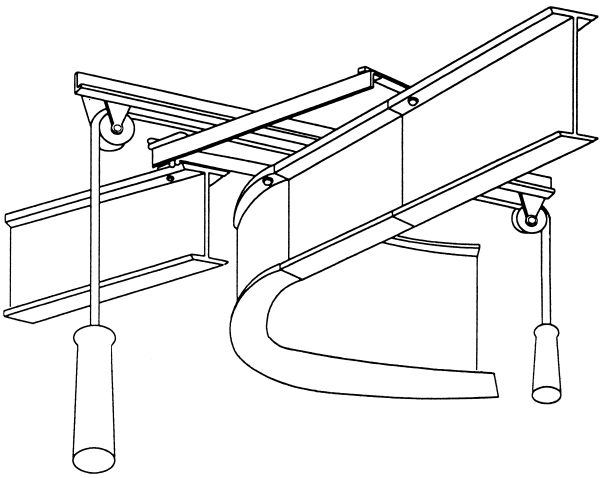

Fig. NUM-III-6100-2 Two-Way Switches

(c) Where multiple hanger rods are used at a suspension point, consideration shall be given to the unequal load induced in the rods.

(d) Means shall be provided to restrain the track against damaging lateral and longitudinal movement.

(e) Where the track is suspended from hanger rod assemblies, restraining means shall be provided to prevent the hanger rod nuts from backing off the hanger rods.

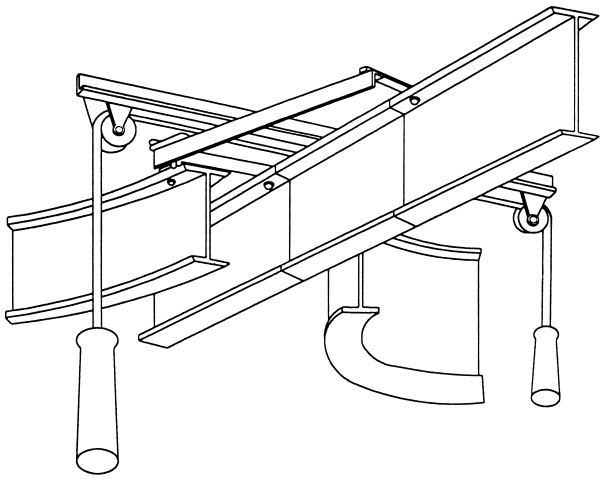

Fig. NUM-III-6100-3 Three-Way Switches

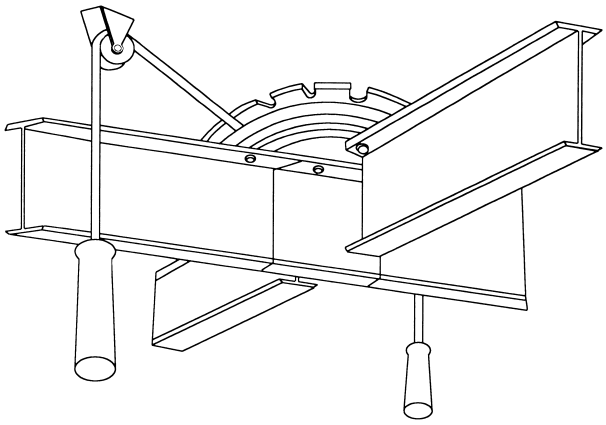

Fig. NUM-III-6100-4 Cross-Track Switches

(f) All monorail beam supports shall conform to the minimum design parameters as specified in NUM-III-8200 and the AISC Manual of Steel Construction.

NUM-III-6225 Girders, Beams, or Tracks. Girders may be standard rolled beams, patented shape track, or plate girders. Where necessary, auxiliary girders shall be used to support overhanging loads to minimize torsional moments on and lateral deflections of the girder. The analysis required for girders shall be in accordance with NUM-III-8200. On spans over 16 ft, the ratio of span to top flange width shall not exceed 60 to 1.

Copyright ASME International
Provided by IHS under license with ASME
No reproduction or networking permitted without license from IHS
Not for Resale

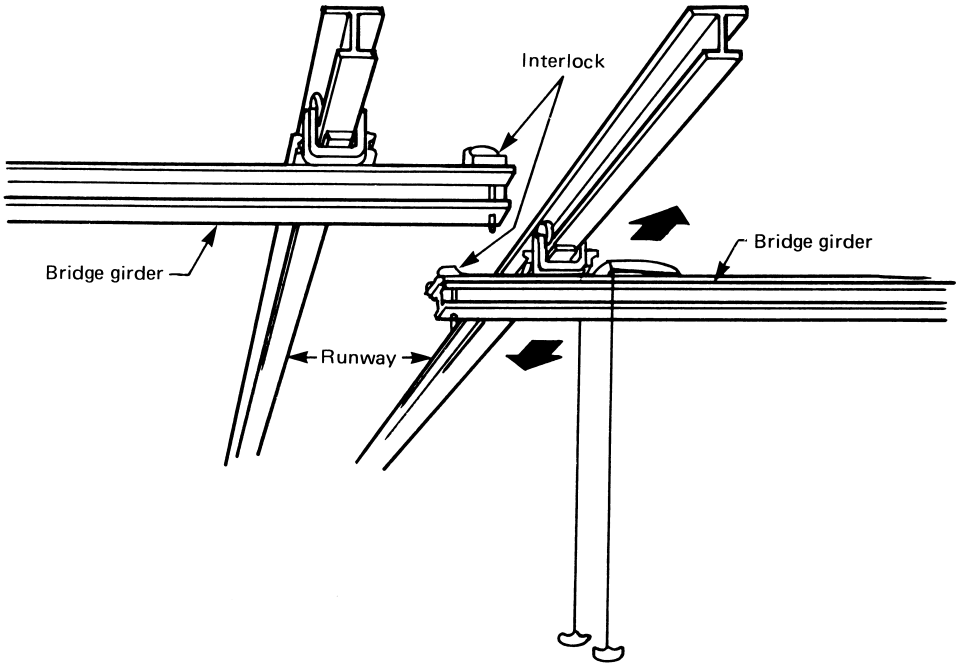

Fig. NUM-III-6100-5 Interlocking Mechanisms

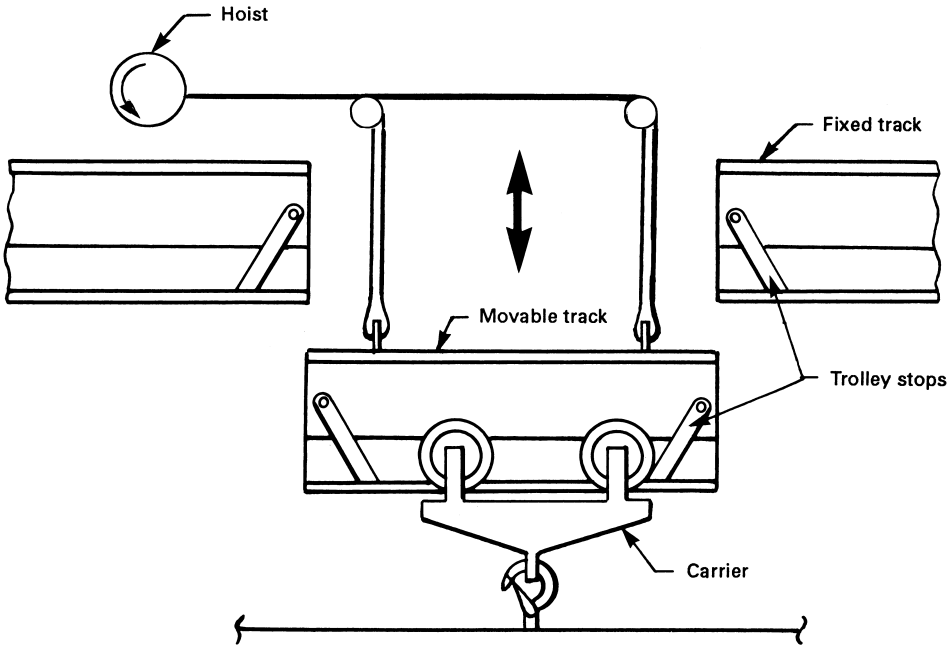

Fig. NUM-III-6100-6 Lift/Drop Sections

Copyright ASME International
Provided by IHS under license with ASME
No reproduction or networking permitted without license from IHS
Not for Resale

NUM-III-6230 Components Design

NUM-III-6231 Track Joints. Web-type or other suitable couplings shall be provided at all track joints. The maximum gap between ends of the load-carrying flange shall not exceed $^{1}/_{16}$ in.

NUM-III-6232 Monorail Curves. Monorail curves shall be of such radius as to permit operation of the carrier without binding.

NUM-III-6233 Building Expansion Joints. Where a track system crosses building expansion joints, provision shall be made to accommodate for differential expansion of the building and track.

NUM-III-6300 MECHANICAL

NUM-III-6310 General

This section covers the specific mechanical requirements and criteria for monorail systems. For other mechanical requirements and criteria common to all cranes, refer to NUM-III-8300.

NUM-III-6320 Carrier (Trolley)

NUM-III-6321 Carrier Drives. Carrier drives for monorail cranes shall be in accordance with NUM-III-7741.

NUM-III-6330 Hoist

The hoist shall be in accordance with NUM-III-7000.

NUM-III-6340 Track Switches

NUM-III-6341 Track Switch Types. Track switches shall be of the tongue, rotary, crosstrack, or sliding type. Track switches shall maintain alignment of the incoming tracks and switch tracks with a maximum gap of $^{3}/_{16}$ in. between adjacent ends of the load-carrying flanges. Switches may be operated by pull chains or ropes, manually, or by electric, pneumatic, or hydraulic operated devices.

NUM-III-6342 Track Switch Stops. Stops shall be provided as an integral part of the switch to protect the end of an incoming track when the switch track is not aligned with the incoming track. Stops shall resist the impact forces of a fully loaded carrier traveling at a speed of 150 fpm or 50% of the full load speed if the carrier is motor propelled. Guards shall also be provided to prevent a carrier on the movable track from running off the movable track when it is not engaged with an incoming track.

NUM-III-6343 Track Switch Holding. Means shall be provided to hold the movable frame in alignment during passage of carriers through the track switch.

NUM-III-6350 Track Openers

Track openers, when required, shall be specified by the owner. The gap between the adjacent track and the track opener shall be not more than $^{3}/_{16}$ in. Forks or stops shall be provided to prevent a carrier from running off either of the open ends of the track when the movable section is not in alignment with the track.

NUM-III-6360 Vertical Drop or Lift Sections

NUM-III-6361 Alignment

(a) Vertical drop or lift sections shall maintain alignment of the stationary tracks and the movable tracks with a maximum gap of $^{3}/_{16}$ in. between adjacent ends of the load-carrying flanges.

(b) When sections are operated by electric, pneumatic, or hydraulic power, means shall be provided to limit the vertical travel for alignment of the movable track with the stationary tracks. Vertical misalignment between the movable track and stationary tracks shall not exceed $^{1}/_{16}$ in.

NUM-III-6362 Track Stops for Vertical Drop or Lift Sections. Stops shall be an integral part of the movable and stationary track and shall prevent a carrier from running off the open ends of the movable or stationary track when the movable track is not in alignment with the stationary tracks.

NUM-III-6400 ELECTRICAL

NUM-III-6410 General

The following information applies to monorail systems that utilize either an electrically operated hoist or electrically operated trolley, or that utilize electrically operated track devices.

NUM-III-6420 Electrical Components

NUM-III-6421 Electrically Operated Track Devices

(a) The owner shall specify if track devices are to be electrically operated.

Copyright ASME International
Provided by IHS under license with ASME
No reproduction or networking permitted without license from IHS
Not for Resale

(b) Standard track devices that are electrically operated are as follows:

(1) track switches and turntables

(2) track interlocks

(3) vertical track lift and drop sections

(4) electric baffles

(c) Electrical baffles shall be provided as required by ASME B30.11.

NUM-III-6422 Motors. Motors for electrically operated track devices shall meet the criteria of NUM-III-8422, except that time rating and size selection shall be as required for the specific track device and application.

NUM-III-6423 Brakes

(a) Vertical track lift and drop sections shall be furnished with a spring-set, friction-type brake having a torque rating of at least 125% of the rated motor torque of the track device hoisting motor.

(b) Spring-set, friction-type brakes shall be in accordance with NUM-III-8423.

NUM-III-6424 Disconnects and Protective Devices. Disconnects and protective devices shall be provided in accordance with ANSI/NFPA 70 Article 610.

NUM-III-6425 Operator Stations and Controllers

(a) The type of operator station and its location for controlling electrically operated track devices shall be specified by the owner.

(b) The location of the push-button controllers shall be one of the following:

(1) suspended from the track device, or from the track itself near the device, offset from the track to allow clearance for the hoist, trolley, and load;

(2) mounted on a fixed building column or other structure near the track device;

(3) combined with the controllers of a suspended push-button station from the hoist and trolley;

(4) combined with the controllers of a suspended push-button station from an interlocking bridge; or

(5) remote-mounted off the monorail.

NUM-III-6426 Electrical Enclosures. Electrical enclosures shall be in accordance with the criteria of NUM-III-8426, suitable for the owner-specified environmental conditions of service.

NUM-III-6427 Current Conductor Systems. All current conductor systems shall meet the criteria of NUM-III-8427, with monorail system conductors meeting the same requirements as those specified for bridge conductors.

NUM-III-6428 Warning Devices. A gong or other warning means shall be provided for all cab-operated and remote-operated monorail systems.

NUM-III-6429 Auxiliary Electrical Equipment. Electrical interlocks and travel limit switches shall be provided as requested by the owner.

NUM-III-6430 Wiring Materials and Methods

Wiring materials and methods shall meet the criteria of NUM-III-8430.

NUM-III-6500 INSPECTION AND TESTING

NUM-III-6510 Performance

Inspection and testing of monorails shall be in accordance with NUM-III-8500. The following site inspections shall be performed as applicable to verify installation:

(a) Tracks. Check the following for compliance with drawings and with NUM-III-6200:

(1) track levelness

(2) proper location and installation of supports (e.g., hanger rods)

(3) bracing to prevent excessive sway

(4) rail couplings (splice plates)

(5) rail spacing (gaps)

(6) track radii

(7) proper clearances

(8) end stops

(b) Track Switches. Check track switches for:

(1) proper alignment and operation

(2) spacing (gaps)

(3) stops or guards on open ends of track and on movable track

(4) means of holding movable track when carrier (trolley) is being moved on it

(5) electric baffles (if provided to prevent load path from interfering with load path of adjacent track)

NOTE: Track switches shall only operate with an unloaded carrier unless otherwise specified and designed for.

(c) Track Openers. Check track openers, if provided, for:

(1) proper alignment and operation

Copyright ASME International
Provided by IHS under license with ASME
No reproduction or networking permitted without license from IHS
Not for Resale

(2) spacing (gaps)

(3) proper installation of forks or stops to prevent carrier (trolley) from running off open ends of track when movable section is not aligned with the track

(d) Vertical Drop and Lift Sections. Check vertical drop and lift sections for:

(1) proper alignment

(2) spacing (gaps)

(3) end stops

(4) clearances

(5) electric baffles (if provided for cab-operated carriers or automatic-dispatch carriers)

(e) Clearances. Check clearances of lateral or overhead obstructions for compliance with NUM-G-3500.

(f) Locking and Safety Devices. During no-load operational testing, check all locking and safety devices for interlocking mechanisms, track switches, drop sections, and lift sections.

(g) Deflection. Check deflection of track and track components at rated load for compliance with NUM-III-6200.

(h) Rated Load Testing. During rated load testing, check the trolley for smooth motion in all directions, around all curves, across all rail splices, and through all switch configuration and travel direction. Check for proper structural bracing to prevent excessive sway and to check for proper alignment of track splices and switches under load.

--`,,```,,,,````-`-`,,`,,`,`,,`---

Copyright ASME International
Provided by IHS under license with ASME
No reproduction or networking permitted without license from IHS

Not for Resale

Section NUM-III-7000
Overhead Hoists and Under-Running Trolleys

NUM-III-7100 DESCRIPTION

(a) In accordance with the introduction for Type III equipment defined in Section NUM-III-1000, Section NUM-III-7000 applies to overhead hoists and under-running trolleys. The various types of hoists covered by this Section are as follows:

(1) Electric Wire-Rope Hoist. An electric-powered hoist utilizing wire rope as the lifting medium. (See Fig. NUM-III-7100-1 and para. NUM-III-7200.)

(2) Hand-Chain Hoist. A manually operated hoist actuated by a hand chain and utilizing chain as the lifting medium. (See Fig. NUM-III-7100-2 and para. NUM-III-7300.)

(3) Electric-Chain Hoist. An electric-powered hoist utilizing chain as the lifting medium. (See Fig. NUM-III-7100-3 and para. NUM-III-7400.)

(4) Air-Operated Wire-Rope Hoist. An air-powered hoist utilizing wire rope as the lifting medium. (See Fig. NUM-III-7100-4 and para. NUM-III-7500.)

(5) Air-Operated Chain Hoist. An air-powered hoist utilizing chain as the lifting medium. (See Fig. NUM-III-7100-5 and para. NUM-III-7600.)

(b) All hoists listed above are considered overhead hoists and are to be utilized for vertical lifting or lowering a freely suspended, unguided load.

(c) The type of hoist suspension shall be by either an Under-Running Trolley (see Fig. NUM-III-7100-6 and para. NUM-III-7700) or by another means as described in the para. pertaining to the particular hoist type.

NUM-III-7200 ELECTRIC WIRE-ROPE HOISTS

NUM-III-7210 General

This section applies to electric wire-rope hoists for vertical lifting service involving material handling of freely suspended, unguided loads using wire rope as a lifting medium with one of the following types of suspension (see Fig. NUM-III-7210-1):

(a) lug
(b) hook
(c) trolley
(d) base or deck mounted
(e) wall mounted
(f) ceiling mounted

NUM-III-7220 Common Design Considerations

For design considerations common to all hoist types, refer to NUM-III-7900. The following is a list of applicable NUM-III references for your use:

NUM-III-7910	General
NUM-III-7920	Application
NUM-III-7930	Design Considerations
NUM-III-7940	Mechanical
NUM-III-7941	Hooks and Load Blocks
NUM-III-7941.1	Hooks
NUM-III-7941.2	Load Blocks
NUM-III-7942	Wire Rope
NUM-III-7942.1	Sheaves
NUM-III-7942.2	Drums
NUM-III-7942.3	Reeving
NUM-III-7944	Bearings and Rotating Shafts
NUM-III-7944.1	Bearings
NUM-III-7944.2	Rotating Shafts
NUM-III-7945	Gearing
NUM-III-7946	Hoist Brakes
NUM-III-7946.1	Power-Operated Hoists
NUM-III-7947	Over-Travel- and Overload-Limiting Devices
NUM-III-7947.1	Over-Travel Protection
NUM-III-7947.2	Overload-Limiting Devices
NUM-III-7948	Motor Size Selection
NUM-III-7950	Electrical
NUM-III-7951	General
NUM-III-7951.1	Hazardous Location
NUM-III-7951.2	Fungus Protection
NUM-III-7952	Motors
NUM-III-7953	Controllers
NUM-III-7953.1	Types of Control
NUM-III-7953.2	Contactors
NUM-III-7953.3	Pendant Control
NUM-III-7953.4	Pull-Cord Control
NUM-III-7954	Control Enclosures
NUM-III-7955	Resistors
NUM-III-7956	Current Conductor System
NUM-III-7970	Hoist Marking

Copyright ASME International
Provided by IHS under license with ASME
No reproduction or networking permitted without license from IHS
Not for Resale

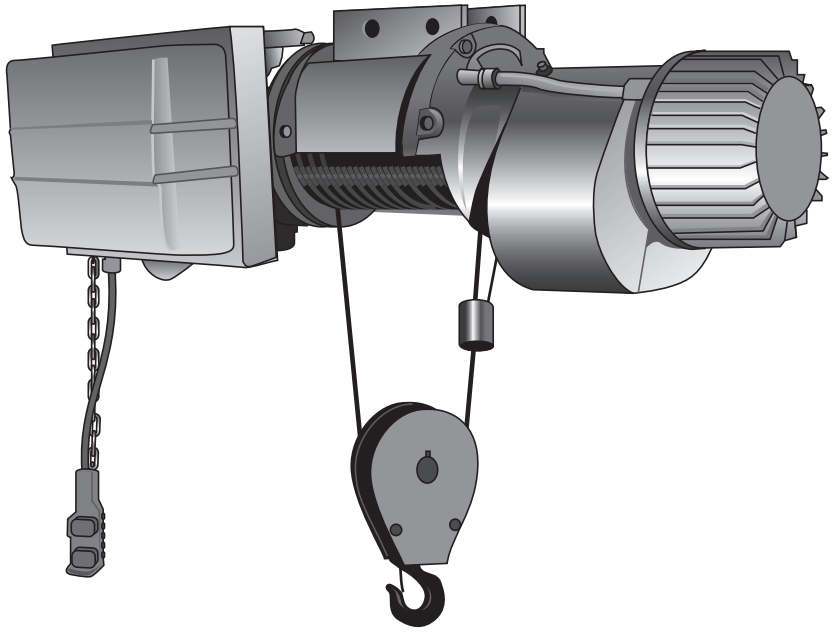

Fig. NUM-III-7100-1 Electric Wire-Rope Hoist

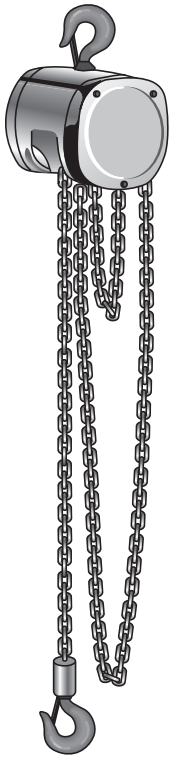

Fig. NUM-III-7100-2 Hand-Chain Hoist



Fig. NUM-III-7100-3 Electric-Chain Hoist

Copyright ASME International
Provided by IHS under license with ASME
No reproduction or networking permitted without license from IHS
Not for Resale



Fig. NUM-III-7100-4 Air-Operated Wire-Rope Hoist



Fig. NUM-III-7100-5 Air-Operated Chain Hoist

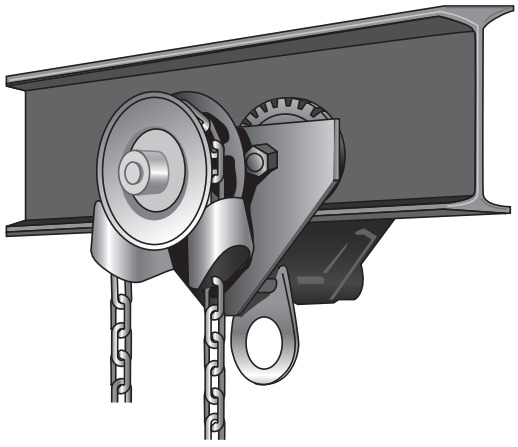

Fig. NUM-III-7100-6 Under-Running Trolley

Copyright ASME International
Provided by IHS under license with ASME
No reproduction or networking permitted without license from IHS
Not for Resale

NUM-III-7230 Specific Design Considerations

All design considerations for electric wire-rope hoists are covered in NUM-III-7900.

NUM-III-7300 HAND-CHAIN HOISTS

NUM-III-7310 General

This section applies to hand-chain manually operated chain hoists for vertical lifting service involving material handling of freely suspended, unguided loads using welded-link-type load chain as a lifting medium with one of the following types of suspensions (see Fig. NUM-III-7310-1):

(a) clevis
(b) hook
(c) trolley

Differential pulley and self-locking worm-drive-type hoists are not included.

NUM-III-7320 Common Design Considerations

For design considerations common to all hoist types, refer to NUM-III-7900. The following is a list of paragraphs applicable to hand-chain hoists:

NUM-III-7910	General
NUM-III-7920	Application
NUM-III-7930	Design Considerations
NUM-III-7940	Mechanical
NUM-III-7941	Hooks and Load Blocks
NUM-III-7941.1	Hooks
NUM-III-7941.2	Load Blocks
NUM-III-7943	Chains
NUM-III-7943.1	Load Chains
NUM-III-7943.2	Load Sprockets
NUM-III-7943.3	Chain Containers
NUM-III-7944	Bearings and Rotating Shafts
NUM-III-7944.1	Bearings
NUM-III-7944.2	Rotating Shafts
NUM-III-7945	Gearing
NUM-III-7946	Hoist Brakes
NUM-III-7946.2	Manual-Operated Hoists
NUM-III-7947	Over-Travel- and Overload-Limiting Devices
NUM-III-7947.1	Over-Travel Protection
NUM-III-7970	Hoist Marking

NUM-III-7330 Specific Design Considerations

For design considerations specific to hand-chain hoists, refer to the paras. below.

NUM-III-7340 Mechanical

NUM-III-7341 Hand Chains

(a) Hand chains shall be of the link-chain type. Each link shall be of uniform size and shape with an accurate pitch to reliably pass over and around the hand-chain wheels.

(b) Hand chains shall be endless link chain and shall reach to within 18 to 24 in. of the operator's floor level or as specified by the owner.

(c) Hoist hand chains shall withstand, without permanent distortion, a pull of either three times the pull required to lift rated load, or 300 lbs, whichever is greater.

(d) Typical hand-chain pull and overhaul characteristics are presented in Table NUM-B-4000-1.

NUM-III-7400 ELECTRIC-CHAIN HOISTS

NUM-III-7410 General

This section applies to electric-chain hoists for vertical lifting service involving material handling of freely suspended, unguided loads using load chain of the welded-link type with one of the following types of suspension (see Fig. NUM-III-7410-1):

(a) hook or clevis
(b) lug
(c) trolley

NUM-III-7420 Common Design Considerations

For design considerations common to all hoist types, refer to NUM-III-7900. The following is a list of paragraphs applicable to electric-chain hoists:

NUM-III-7910	General
NUM-III-7920	Application
NUM-III-7930	Design Considerations
NUM-III-7940	Mechanical
NUM-III-7941	Hooks and Load Blocks
NUM-III-7941.1	Hooks
NUM-III-7941.2	Load Blocks
NUM-III-7943	Chains
NUM-III-7943.1	Load Chains
NUM-III-7943.2	Load Sprockets
NUM-III-7943.3	Chain Containers
NUM-III-7944	Bearings and Rotating Shafts
NUM-III-7944.1	Bearings
NUM-III-7944.2	Rotating Shafts
NUM-III-7945	Gearing
NUM-III-7946	Hoist Brakes
NUM-III-7946.1	Power-Operated Hoists

Copyright ASME International
Provided by IHS under license with ASME
No reproduction or networking permitted without license from IHS
Not for Resale

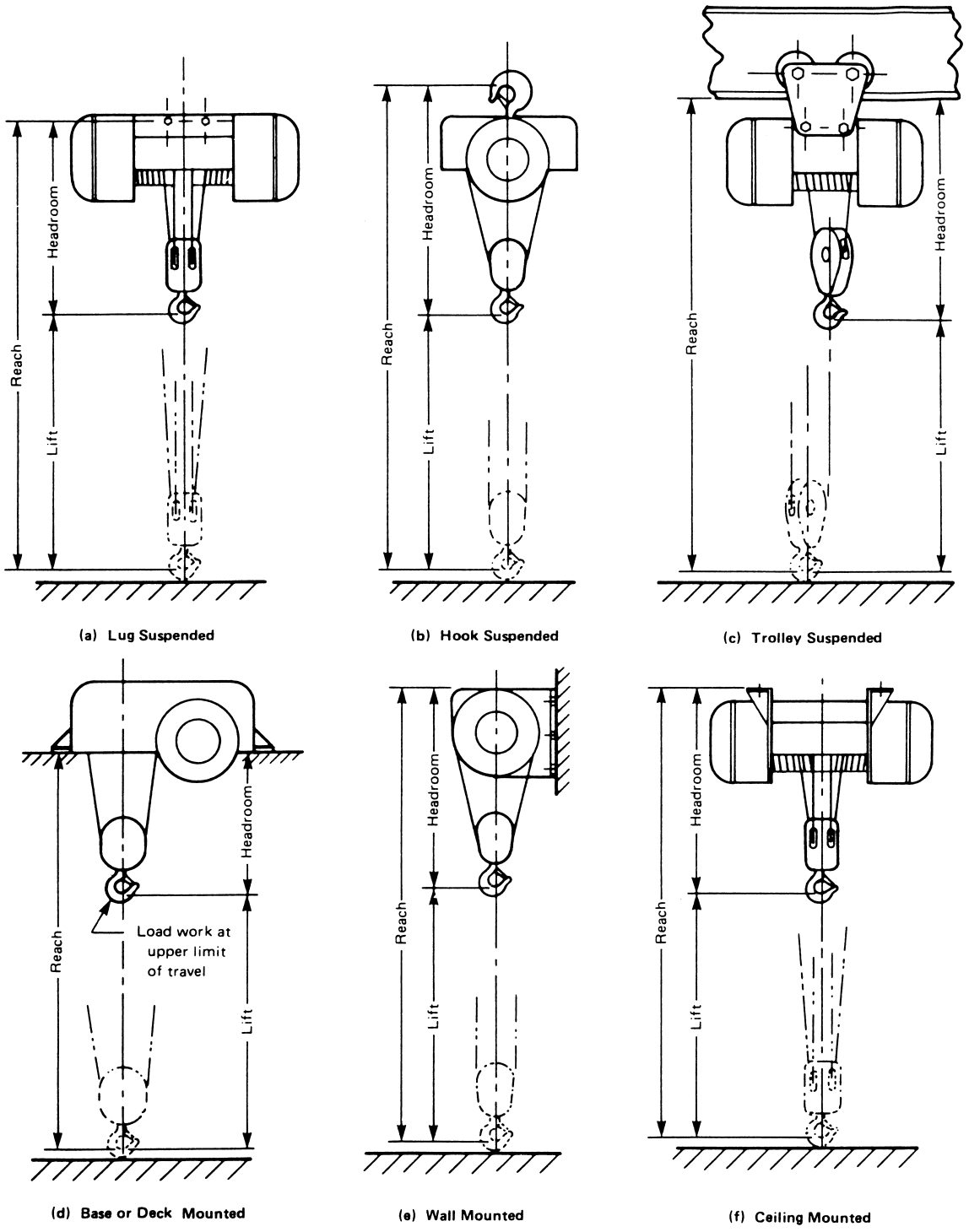

GENERAL NOTE: Illustrations shown are not intended to confine the use of single or double reeving. Each of the mountings may be used with either type of reeving.

Fig. NUM-III-7210-1 Electric Wire-Rope Hoist, Suspension Types

Copyright ASME International
Provided by IHS under license with ASME
No reproduction or networking permitted without license from IHS
Not for Resale

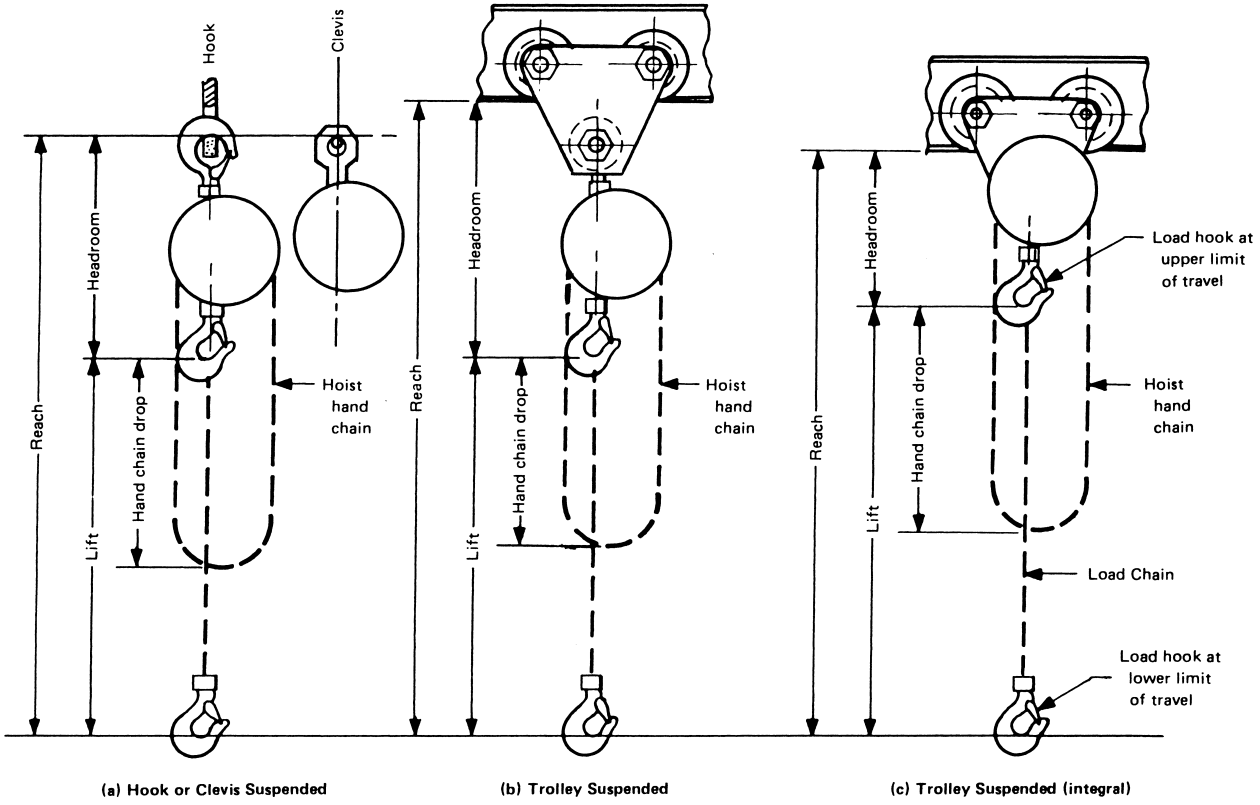

Fig. NUM-III-7310-1 Hand-Chain Hoist, Suspension Types

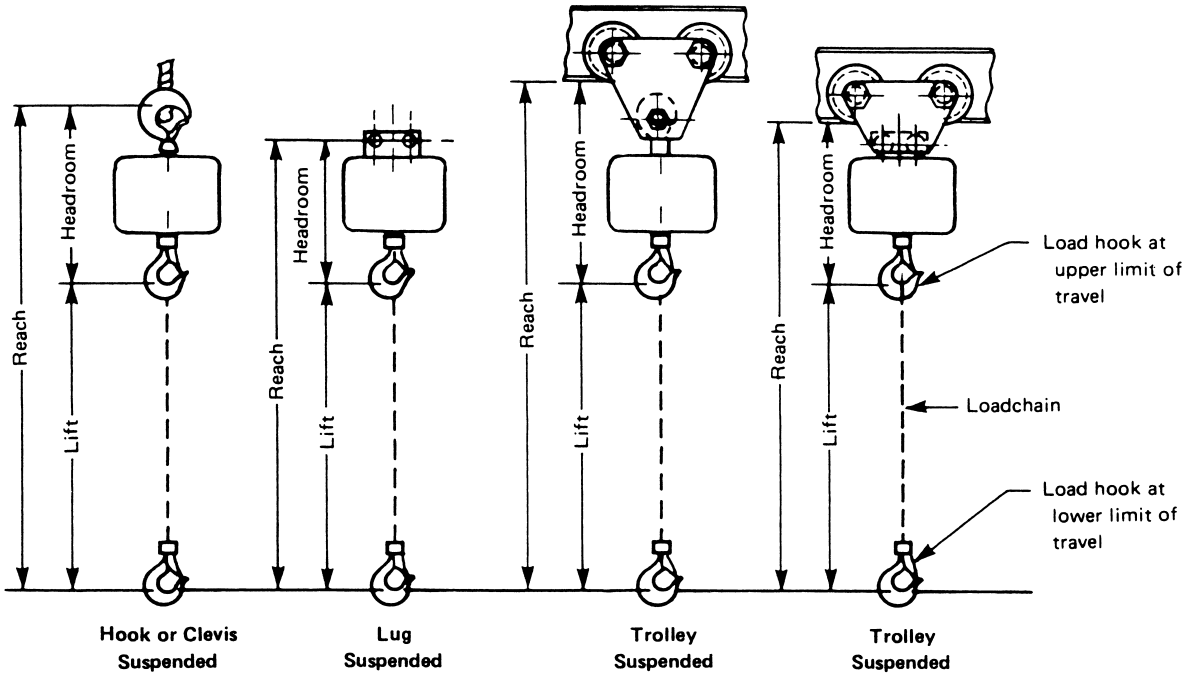

Fig. NUM-III-7410-1 Electric-Chain Hoist, Suspension Types

Copyright ASME International
Provided by IHS under license with ASME
No reproduction or networking permitted without license from IHS
Not for Resale

NUM-III-7947	Over-Travel- and Overload-Limiting Devices
NUM-III-7947.1	Over-Travel Protection
NUM-III-7947.2	Overload-Limiting Devices
NUM-III-7948	Motor Size Selection
NUM-III-7950	Electrical
NUM-III-7951	General
NUM-III-7951.1	Hazardous Location
NUM-III-7951.2	Fungus Protection
NUM-III-7952	Motors
NUM-III-7953	Controllers
NUM-III-7953.1	Types of Control
NUM-III-7953.2	Contactors
NUM-III-7953.3	Pendant Control
NUM-III-7953.4	Pull-Cord Control
NUM-III-7954	Control Enclosures
NUM-III-7955	Resistors
NUM-III-7956	Current Conductor System
NUM-III-7970	Hoist Marking

NUM-III-7430 Specific Design Considerations

All design considerations for electric-chain hoists are covered in NUM-III-7900.

NUM-III-7500 AIR-OPERATED WIRE-ROPE HOISTS

NUM-III-7510 General

This section applies to air-operated wire-rope hoists for vertical lifting service involving material handling of freely suspended unguided loads using wire rope as a lifting medium with one of the following types of suspension (see Fig. NUM-III-7510-1):

(a) lug
(b) hook
(c) trolley
(d) base or deck mounted
(e) wall mounted
(f) ceiling mounted

NUM-III-7520 Common Design Considerations

For design considerations common to all hoist types, refer to NUM-III-7900. The following is a list of paragraphs applicable to air-operated wire-rope hoists:

NUM-III-7910	General
NUM-III-7920	Application
NUM-III-7930	Design Considerations
NUM-III-7940	Mechanical
NUM-III-7941	Hooks and Load Blocks
NUM-III-7941.1	Hooks
NUM-III-7941.2	Load Blocks
NUM-III-7942	Wire Rope
NUM-III-7942.1	Sheaves
NUM-III-7942.2	Drums
NUM-III-7942.3	Reeving
NUM-III-7944	Bearings and Rotating Shafts
NUM-III-7944.1	Bearings
NUM-III-7944.2	Rotating Shafts
NUM-III-7945	Gearing
NUM-III-7946	Hoist Brakes
NUM-III-7946.1	Power-Operated Hoists
NUM-III-7947	Over-Travel- and Overload-Limiting Devices
NUM-III-7947.1	Over-Travel Protection
NUM-III-7947.2	Overload-Limiting Devices
NUM-III-7948	Motor Size Selection
NUM-III-7960	Pneumatic
NUM-III-7961	Air Motors
NUM-III-7962	Air Motor Controls
NUM-III-7962.1	Pendant Control
NUM-III-7962.2	Pull Control
NUM-III-7962.3	Rod Control
NUM-III-7970	Hoist Marking

NUM-III-7530 Specific Design Considerations

All design considerations for air-operated wire-rope hoists are covered in NUM-III-7900.

NUM-III-7600 AIR-OPERATED CHAIN HOISTS

NUM-III-7610 General

This section applies to air-powered chain hoists for vertical lifting service involving material handling of freely suspended unguided loads using load chain of the welded-link type with one of the following types of suspension (see Fig. NUM-III-7610-1):

(a) hook or clevis
(b) lug
(c) trolley

NUM-III-7620 Common Design Considerations

For design considerations common to all hoist types, refer to NUM-III-7900. The following is a list of paragraphs applicable to air-operated chain hoists:

NUM-III-7910	General
NUM-III-7920	Application
NUM-III-7930	Design Considerations

Copyright ASME International
Provided by IHS under license with ASME
No reproduction or networking permitted without license from IHS
Not for Resale

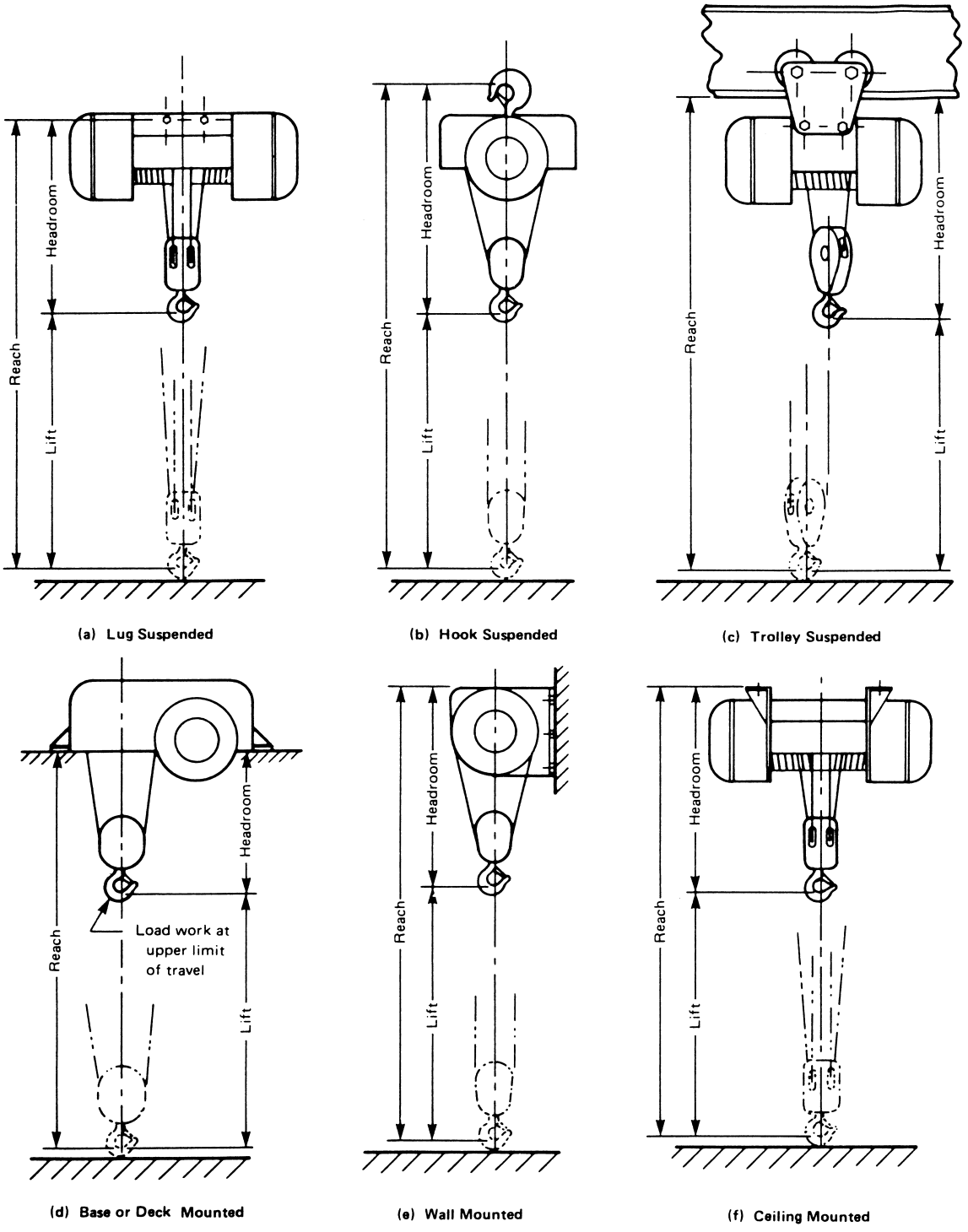

GENERAL NOTE: Illustrations shown are not intended to confine the use of single or double reeving. Each of the mountings may be used with either type of reeving.

Fig. NUM-III-7510-1 Air-Operated Wire-Rope Hoist, Suspension Types

Copyright ASME International
Provided by IHS under license with ASME
No reproduction or networking permitted without license from IHS Not for Resale

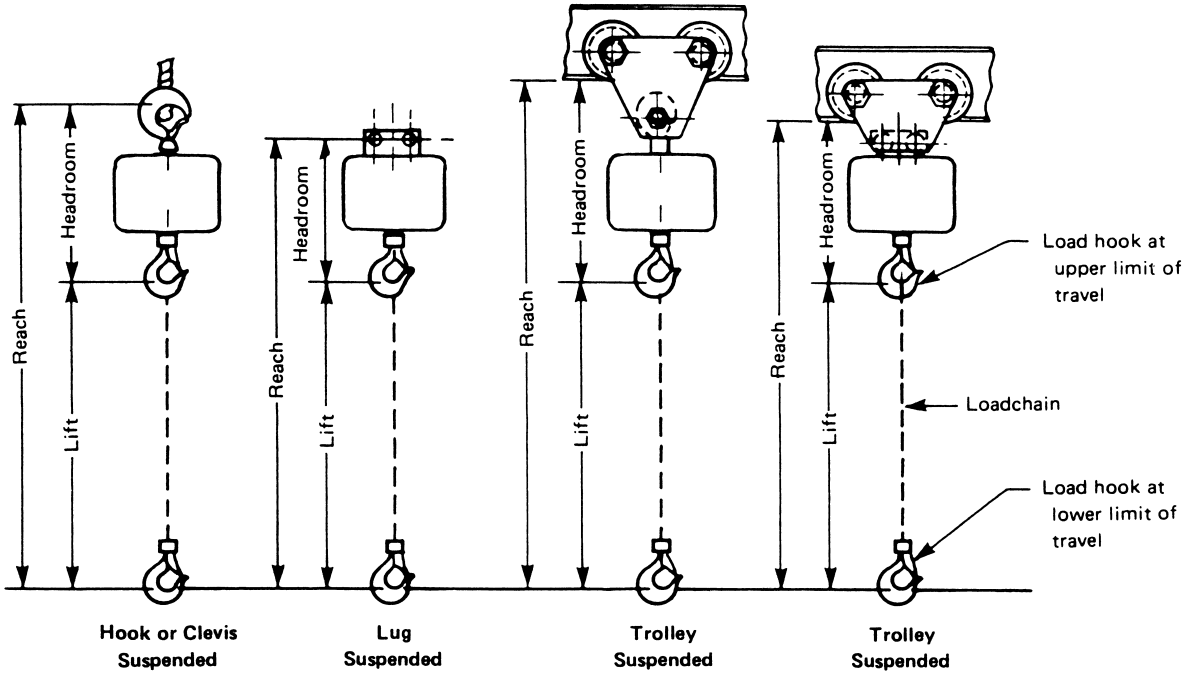

Fig. NUM-III-7610-1 Air-Operated Chain Hoist, Suspension Types

NUM-III-7940	Mechanical
NUM-III-7941	Hooks and Load Blocks
NUM-III-7941.1	Hooks
NUM-III-7941.2	Load Blocks
NUM-III-7943	Chains
NUM-III-7943.1	Load Chains
NUM-III-7943.2	Load Sprockets
NUM-III-7943.3	Chain Containers
NUM-III-7944	Bearings and Rotating Shafts
NUM-III-7944.1	Bearings
NUM-III-7944.2	Rotating Shafts
NUM-III-7945	Gearing
NUM-III-7946	Hoist Brakes
NUM-III-7946.1	Power-Operated Hoists
NUM-III-7947	Over-Travel- and Overload-Limiting Devices
NUM-III-7947.1	Over-Travel Protection
NUM-III-7947.2	Overload-Limiting Devices
NUM-III-7948	Motor Size Selection
NUM-III-7960	Pneumatic
NUM-III-7961	Air Motors
NUM-III-7962	Air Motor Controls
NUM-III-7962.1	Pendant Control
NUM-III-7962.2	Pull Control
NUM-III-7962.3	Rod Control
NUM-III-7970	Hoist Marking

NUM-III-7630 Specific Design Considerations

All design considerations for air-operated chain hoists are covered in NUM-III-7900.

NUM-III-7700 UNDER-RUNNING TROLLEYS

NUM-III-7710 General

This section applies to plain-type, hand-chain-operated, and motor-driven under-running trolleys. Trolleys may be suspended from multiple girders or from a single girder. Trolleys may be either integral with a hoist or may be furnished as separate units to which a hoist or load could be attached.

NUM-III-7711 Design Considerations. Factors to be considered in the design of the trolley include curved beams, beam switches, exceptionally long runs, or continuous operation.

NUM-III-7720 Application

See NUM-B-5000 regarding under-running trolley application.

Copyright ASME International
Provided by IHS under license with ASME
No reproduction or networking permitted without license from IHS
Not for Resale

NUM-III-7730 Structural Design

All structural design shall be in accordance with NUM-III-8200.

NUM-III-7731 Impact Allowance. Where powered hoists are used, an impact allowance shall be 0.5% of the rated load for each ft per min of hoisting speed with a minimum allowance of 15% and a maximum of 50%.

NUM-III-7732 Trolley Frames

(a) Safety lugs or brackets should be provided on the trolley frame to limit the drop to no greater than 1 in. should an axle or wheel fail.

(b) The trolley frame shall be of rigid construction such that lifted loads do not cause deflections that impair the proper operation of machinery.

NUM-III-7740 Mechanical

NUM-III-7741 Trolley Drives

NUM-III-7741.1 Plain (Push) Type. Trolley motion is induced by pushing/pulling the load or by use of a tag line.

NUM-III-7741.2 Hand-Chain Operated

(a) Trolley motion is induced by pulling on an endless link chain driving a sprocket wheel. The motion of the sprocket wheel shall be transmitted through suitable gearing to wheel-gear pinion sets. A minimum of two wheels shall be driven on each trolley.

(b) The chain pull required to move the trolley shall not exceed 60 lbs. The hand chain shall reach to within 18 to 24 in. of the operator's floor level or as specified by the owner.

(c) Trolley hand chains shall withstand, without permanent distortion, a force of three times the pull required to traverse the trolley at rated load or 300 lbs, whichever is greater.

(d) The hand chains shall be guided to guard against disengagement from the hand-chain wheel and to permit operation of the hand chain from an angle 10 deg out from either side of the chain wheel.

NUM-III-7741.3 Motor-Operated Trolleys. Motor-operated trolleys shall be one of the following arrangements:

(a) A driving mechanism where traction is dependent upon the wheel load of the driving wheels running on the top side of the lower flange.

(b) A tractor drive which provides traction by pressure of the driving wheel or wheels on the underside of the track. The pressure of the driving wheel or wheels on the tractor drive shall be adjustable. Tractor drives may be separate units or combined with the load-supporting wheels.

(c) A cushioned start or variable speed drive is recommended for trolley speeds above 100 ft per min and for trolleys used on beams with curved sections.

NUM-III-7742 Wheels. Trolley wheels shall be in accordance with NUM-III-8344.

NUM-III-7743 Drive Shafts. Trolley drive shafts shall be in accordance with NUM-III-8343.

NUM-III-7744 Bearings

(a) Wheel bearings shall be in accordance with NUM-III-8344.4.

(b) Bearings for motorized trolleys shall be selected to provide a minimum L-10 life of 1,250 hr for Class A service, 2,500 hr for Class B service, 5,000 hr for Class C service, and 10,000 hr for Class D service. (For service class, refer to NUM-G-3200.)

(c) Bearing life shall be based on 75% of the wheel load (impact not included) for full rated speed of motor-propelled trolleys. For manually propelled trolleys, use a speed of 150 fpm.

(d) Bearings other than wheel bearings shall be in accordance with NUM-III-8342.

NUM-III-7745 Gearing. Trolley gearing other than chain sprockets shall be in accordance with NUM-III-8341.

NUM-III-7746 Brakes. Trolley brakes, when specified, shall be in accordance with NUM-III-8332, Bridge Brakes.

NUM-III-7747 Bumpers. Bumpers, if specified, shall be in accordance with NUM-III-8333.

NUM-III-7748 Mechanical Component Design. All other mechanical components shall be designed in accordance with NUM-III-8320.

NUM-III-7750 Motors

Motors shall be in accordance with NUM-III-8400 for electric motors and NUM-III-7961 for air motors.

NUM-III-7751 Motor Controls. Controls shall be in accordance with NUM-III-7950 (electric) or NUM-III-7960 (air).

Copyright ASME International
Provided by IHS under license with ASME
No reproduction or networking permitted without license from IHS
Not for Resale

NUM-III-7800 INSPECTION AND TESTING

Perform inspection and testing of hoists and underrunning trolleys in accordance with NUM-III-8500.

NUM-III-7900 HOIST COMMON REQUIREMENTS

NUM-III-7910 General

This section applies to all requirements that are common to all (electric or air) manual- and power-operated hoists for vertical lifting service involving material handling of freely suspended, unguided loads, using wire-rope or welded-link-type load chains as a lifting medium.

NUM-III-7920 Application

Hoists shall be capable of vertical lifting or lowering a freely suspended, unguided load within their rated load. The supporting structure, including trolley, monorail, or crane, if any, shall be designed to withstand the loads and forces imposed by the hoists during operation at rated loads and speeds.

NUM-III-7930 Design Considerations

(a) The hoist and its means of suspension supplied with the hoist shall be designed to withstand all stresses imposed under normal operating conditions while handling the rated load.

(b) All load-carrying parts for power-operated hoists shall be designed so that the static stress calculated for the rated load shall not exceed 20% of the average ultimate strength of the material.

(c) For power-operated hoists, the power transmission parts shall be designed so that the dynamic stresses calculated for the rated load shall not exceed the fatigue and endurance limits established in accordance with NUM-III-8340 for the specified service class.

(d) All load-carrying parts for manually operated hoists shall be designed so that the static stress calculated for the rated load shall not exceed 25% of the average ultimate material strength.

(e) Modifications to upgrade, rerate, or modernize hoist equipment shall be as authorized only by the original equipment manufacturer or a qualified person.

NUM-III-7940 Mechanical

Mechanical component connections shall be designed to accommodate all dynamic forces, such as those induced by motor starting (where applicable) and braking applications.

NUM-III-7941 Hooks and Load Blocks

NUM-III-7941.1 Hooks

(a) If the hooks are of the swiveling type, they shall be capable of rotating through 360 degrees when supporting the rated load, unless otherwise specified by the owner.

(b) Hook latches shall be provided, unless the application makes use of the latch impractical. When required, a hook latch shall be provided to bridge the throat opening of the hook for the purpose of retaining slings, chains, etc., under slack conditions. Depending on the conditions of service, consideration shall be given to the use of hook latches constructed of corrosion-resistant materials.

(c) All hooks and latches shall comply with ASME B30.10.

NUM-III-7941.2 Load Blocks. Load blocks shall be of the guarded/enclosed type and shall guard against rope or load-chain jamming under normal operating conditions.

NUM-III-7942 Wire Rope

(a) Wire rope shall be of a type and construction suitable for hoist service. **(04)**

(b) The rated load divided by the number of parts of the rope shall not exceed 20% of the nominal strength of the rope as defined in the Wire Rope Users Manual. **(04)**

(c) The rope ends shall be attached to the hoist in such a manner as to prevent disengagement throughout rated hook travel.

(d) End terminations shall be in accordance with the Wire Rope Users Manual.

(e) Rope clips shall be drop forged. Clip application shall be in accordance with the Wire Rope Users Manual.

(f) If a load is supported by more than one part of rope, the tension on all parts shall be equalized.

(g) Rope fleet angles for the drum shall be limited to 4 deg.

(h) Rope fleet angles for sheaves shall be limited to 4 deg 45 min.

NUM-III-7942.1 Sheaves

(a) Sheave grooves shall be smooth and free from surface irregularities that could cause rope damage. The cross-sectional radius at the bottom of the groove should be such as to form a close-fitting saddle for the size of the rope used, and the sides of the groove

Copyright ASME International
Provided by IHS under license with ASME
No reproduction or networking permitted without license from IHS
Not for Resale

Table NUM-III-7942.1-1 Minimum Pitch Diameter of Running Sheaves

Hoist Class	6 X 37 Class Rope	6 X 19 Class Rope
H1 and H2	16 x *d*	20 x *d*
H3	18 x *d*	24 x *d*
H4	20 x *d*	24 x *d*
H5	24 x *d*	30 x *d*

GENERAL NOTE: *d* = rope diameter.

Table NUM-III-7942.2-1 Minimum Pitch Diameter of Drums

Hoist Class	6 X 37 Class Rope	6 X 19 Class Rope
H1 and H2	16 x *d*	20 x *d*
H3	18 x *d*	24 x *d*
H4	20 x *d*	24 x *d*
H5	24 x *d*	30 x *d*

GENERAL NOTE: *d* = rope diameter.

should be tapered outwardly to facilitate entrance of the rope into the groove. Flanges shall be rounded, and the rims shall run true about the axis of rotation.

(b) Sheaves shall be mounted and guarded to protect against the entrance of foreign objects, wire-rope jamming, and wire-rope displacement during normal operation.

(c) All running sheaves shall use anti-friction bearings. All running sheave bearings, except permanently lubricated bearings shall be equipped with means for lubrication.

(d) Equalizer sheaves shall be provided with bronze bushings, oil-impregnated bearings, anti-friction bearings with grease fittings, or other means to ensure that the sheave bearing remains lubricated assuring its capability to provide the rotation required to equalize the reeving.

(e) The pitch diameter of running sheaves shall not be less than that indicated in Table NUM-III-7942.1-1.

(f) The pitch diameter of nonrunning sheaves (equalizers) shall not be less than 12 times the rope diameter.

NUM-III-7942.2 Drums

(a) Rope drums shall be grooved and the grooves shall be smooth and free from surface irregularities that could cause rope damage. The cross-sectional radius at the bottom of the groove should form a close-fitting saddle for the size of the rope used. The top edge of the grooves shall be rounded to minimize rope damage and wear.

(b) Rope drums shall be flanged to guard against ropes sliding over the ends of the drum. Drums that are mounted in the hoist structure such that the rope cannot slip over the drum ends do not require flanges.

(c) All rope drums shall have only one layer of rope and the drum shall be designed to store the entire length of rope for the rated lift with the load block in its uppermost position.

(d) No less than two wraps of rope shall remain on each anchorage of the hoist drum when the hook is in its lowest position unless a lower limit device is provided, in which case no less than one wrap shall remain on each anchorage of the hoist drum.

(e) Minimum drum groove depth shall be 0.5 times the rope diameter.

(f) The minimum drum groove pitch is either 1.14 times the rope diameter or the rope diameter plus $\frac{1}{8}$ in., whichever is smaller.

(g) The rope drum pitch diameter shall not be less than that indicated in Table NUM-III-7942.2-1.

NUM-III-7942.3 Reeving. Hoist reeving may be either single or double and may be one part or multiple parts.

(a) On single-reeved hoists, one end of the rope is

Copyright ASME International
Provided by IHS under license with ASME
No reproduction or networking permitted without license from IHS Not for Resale

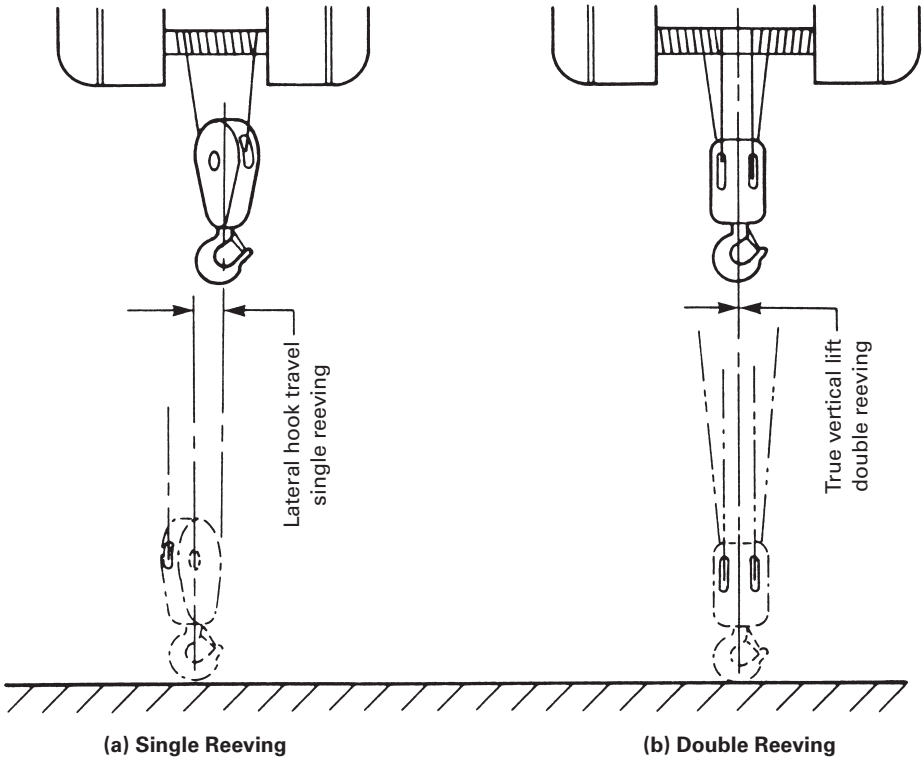

Fig. NUM-III-7942-3-1 Single and Double Reeving

attached to the drum. Continuous drum grooving runs in one direction. The load block moves laterally in the direction of the axis of the drum as the rope winds onto or off of the drum. Refer to Fig. NUM-III-7942.3-1.

(b) On double-reeved hoists, both ends of the rope are attached to the drum. The drum is grooved with left- and right-hand grooves beginning at both ends of the drum, then grooving toward the center of the drum. The load block will follow a true vertical path (true vertical lift) as the ropes wind toward or away from each other onto or off the drum. Refer to Fig. NUM-III-7942.3-1.

NUM-III-7943 Chains

NUM-III-7943.1 Load Chains

(a) Load chain shall be alloy steel and of the link-chain type suitable for hoisting applications. The chain links shall be electric or forge welded. Each link shall be of uniform size and shape, free from scale and laminations at the welds.

(b) Chains shall pass over and around the load sprockets without binding or other malfunctions.

(c) The ends of the load chain shall be securely attached to the hoist or provided with a means to prevent the end of the chain from passing through the hoist. The chain must also be designed to allow easy removal and replacement.

(d) Load chains shall be proof tested by the chain manufacturer or hoist manufacturer with a load at least equivalent to $1\frac{1}{2}$ times the hoist's rated load divided by the number of chain parts supporting the load.

(e) If a load is supported by more than one part of load chain, the tension on the parts shall be equalized.

(f) Load chain should be lubricated.

NUM-III-7943.2 Load Sprockets

(a) Load sprockets shall have pockets formed to allow proper and reliable engagement of the load chain.

(b) Load sprockets shall be guarded to minimize the entrance of foreign objects.

(c) Provision shall be made to guard against load chain jamming.

NUM-III-7943.3 Chain Containers. If provided, chain containers shall be as follows:

(a) Sized to store all the "not in use" portion of the load chain and maintain tension in the slack chain

Copyright ASME International
Provided by IHS under license with ASME
No reproduction or networking permitted without license from IHS
Not for Resale

Table NUM-III-7944.1-1
Bearing Life Expectancy

Class	Minimum Life Expectancy, hr
H1	1,250
H2	2,500
H3	5,000
H4	10,000
H5	20,000

between the chain guide and the stored chain when the hook is in its highest position.

(b) Constructed with drains when used for outdoor applications.

NUM-III-7944 Bearings and Rotating Shafts

NUM-III-7944.1 Bearings

(a) All Hoists

(1) Shaft bushings or bearings shall be enclosed against entry of dirt, dust, or other foreign material.

(2) All bearings and bushings shall be provided with means of lubrication.

(b) Power-Operated Hoists

(1) Bearings shall be selected to give a minimum B-10 life expectancy based on full rated speed from Table NUM-III-7944.1-1.

(2) Bearing loads, for life computation purposes, will be determined using a mean effective load factor of 0.65.

NUM-III-7944.2 Rotating Shafts. Rotating shafts shall be supported by anti-friction, lubricated or self-lubricated bearings or bushings. All sliding surfaces shall be lubricated.

NUM-III-7945 Gearing

(a) All Hoists

(1) Gears shall be constructed of steel or other material of adequate strength and durability to meet the requirements for the intended class of service. For the purpose of this specification, the strength and durability shall be based on the torque required to lift the rated load.

(2) Means shall be provided to insure adequate and proper lubrication on all gearing.

(3) All gearing not enclosed in gear cases shall be guarded with provision for lubrication and inspection.

(b) Power-Operated Hoists

Table NUM-III-7945-1
Hoist Service Factor, C_d

Class of Service	C_d
H1	0.64
H2	0.72
H3	0.80
H4	0.90
H5	1.00

(1) Due consideration shall be given to the maximum brake torque that can be applied to the drive.

(2) The horsepower rating for all spur, helical, and herringbone gearing shall be based on American Gear Manufacturers Association (AGMA) standards and manufactured to AGMA quality class 6 or better. For the purpose of this specification, the power formula is a follows:

Allowable Strength Horsepower

$$P_{at} = \frac{N_p\, d\, K_v}{126{,}000} \times \frac{F\, S_{at}\, J}{K_m\, P_d\, S_f} \tag{3}$$

Allowable Durability Horsepower

$$P_{ac} = \frac{N_p\, F\, I\, C_v}{126{,}000\, C_m\, C_d\, K_w} \times \left(\frac{S_{ac}\, d\, C_h}{C_p}\right)^2 \tag{4}$$

where

F = net face width of the narrowest of the mating gears
I = geometry factor (durability)
J = geometry factor (strength)
d = pitch diameter of pinion, inches
C_d = hoist service factor (durability), see Table NUM-III-7945-1
C_h = hardness factor (durability)
C_m = load distribution factor (durability)
C_p = elastic coefficient
C_v = dynamic factor (durability)
K_m = load distribution factor (strength)
K_v = dynamic factor (strength)
K_w = mean effective load factor that equals 0.67
N_p = pinion speed, revolutions per min
P_{ac} = allowable durability, horsepower
P_{at} = allowable strength, horsepower

Copyright ASME International
Provided by IHS under license with ASME
No reproduction or networking permitted without license from IHS
Not for Resale

Table NUM-III-7945-2
Hoist Service Factor, S_f

Class of Service	S_f
H1	0.75
H2	0.85
H3	0.90
H4	0.95
H5	1.00

P_d = diametral pitch
S_{ac} = allowable contact stress number (durability)
S_{at} = allowable bending stress for material, lbs per square in. (strength)
S_f = hoist service factor (strength), see Table NUM-III-7945-2

The values for *I, J,* C_h, C_m, C_p, C_v, K_m, K_v, S_{ac}, *and* S_{at} can be determined from the tables and curves in the appropriate AGMA Specification, S_f is in Table NUM-III-7945-2, and the remaining values will be physical characteristics pertaining to the gears for their operational characteristics.

(3) When worm gearing is called for, it shall be rated with appropriate service factors.

NUM-III-7946 Hoist Brakes

NUM-III-7946.1 Power-Operated Hoists

(a) The braking system shall consist of a brake and a control braking means and shall perform the following functions under normal operating conditions with rated load and under rated test conditions.

(1) Stop all hook motion and hold the load when the controls are released.

(2) Limit the speed of the load during lowering to a maximum speed of 120% of rated lowering speed for the rated load.

(3) Stop and hold the load hook in the event of a complete power failure.

(b) Hoist holding brakes shall have minimum torque ratings, stated as a percentage of the rated load hoisting torque, at the point where the holding brake is applied as follows:

(1) 125% when used with a control braking means other than mechanical.

(2) 100% when used with mechanical control braking means.

(3) 100% for each holding brake if two holding brakes are provided.

(c) Each independent hoisting unit, except worm-geared hoists, the angle of whose worm is such as to prevent the load from accelerating in the lowering direction, shall be equipped with control braking means to control lowering speeds. Control braking means shall be mechanical, hydraulic, pneumatic, or electric power (such as eddy current, dynamic, regenerative, or counter torque). All methods must be capable of maintaining controlled lowering speeds. The inherent regenerative controlled braking means of a squirrel cage motor may be used if the holding brake is designed to meet the additional requirement of retarding a descending load upon power removal.

(d) The braking system shall have thermal capacity for the frequency of operation required by the hoist duty service classification.

(e) The hoist holding brakes shall have provision for adjustment to compensate for lining wear.

NUM-III-7946.2 Manual-Operated Hoists

(a) The hoist shall be equipped with a mechanical load brake that shall perform the following functions under normal and rated test load.

(1) Stop and hold the load when the hand chain(s) is released.

(2) Permit smooth, controlled lowering of the load when manual power is applied to the hand chains.

(b) The mechanical load brake shall have provision for adjustment to compensate for wear.

(c) The mechanical load brake shall have heat dissipation capability for the specified frequency of operation.

NUM-III-7947 Over-Travel- and Overload-Limiting Devices

NUM-III-7947.1 Over-Travel Protection

(a) Power-Operated Hoists

(1) A lift-limiting device shall be provided so that the load hook, either loaded or empty, shall not exceed the upper limit of travel.

(2) A lower-limiting device of the geared type should be provided to prevent the wire rope or chain from completely unwinding from the drum.

(b) Manual-Operated Hoists. The load chain shall be restrained to prevent it from being completely run out of the hoist. The restraint, with no load on the hook, shall be designed to withstand the chain load developed by applying a hand-chain force in the downward direction equal to two times the force required to lift the rated load. With rated load on the hoist, the restraint shall withstand a hand-chain force in the

Copyright ASME International
Provided by IHS under license with ASME
No reproduction or networking permitted without license from IHS
Not for Resale

downward direction equal to the force required to lift the load.

NUM-III-7947.2 Overload-Limiting Devices

(a) An overload-limiting device, when furnished, shall be designed to permit operation of the hoist within its rated load and to limit the amount of overload that can be lifted by a properly maintained hoist, under normal operating conditions.

(b) The overload-limiting device may allow the lifting of an overload, but shall be designed to prevent the lifting of an overload that could cause damage to the hoist. This does not imply that any overload is to be intentionally applied to the hoist.

(c) The overload-limiting device is an emergency device and shall not be used to measure the maximum load to be lifted and shall not be used to sense the overload imposed by a constrained load.

(d) The overload device is actuated only by loads incurred when lifting a freely suspended load on the hook. Therefore, an overload device cannot be relied upon to render the hoisting mechanism inoperative if other sources, such as but not limited to, snagging of the load, two blocking of the load block, or snatching a load, induce loads into the hoisting system.

(e) The overload-limiting device is connected into the hoisting control circuit and, therefore, will not prevent damage to the hoist, trolley, or crane, if excessive overloads are induced into the hoisting system when the hoisting mechanism is in a nonoperating or static mode.

NUM-III-7948 Motor Size Selection. Electric and air motors shall have a required rated motor horsepower not less than that given by the following formula:

$$HP_{required} = HP_{mechanical} \times K_c \quad (5)$$

where

$$HP_{mechanical} = \frac{W \times V}{33{,}000 \times E} \quad (6)$$

and

E = mechanical efficiency between the load and the motor, expressed in decimal form, where

$$E = E_g^{\,n} \times E_s^{\,m}$$

V = specified speed, ft per min, when lifting weight W

W = total weight to be lifted, lb (rated load plus the weight of the load block)

m = the number of rotating sheaves between the drum and equalizer passed over by each part of moving rope attached to the drum

n = the number of gear reductions

E_g = efficiency per gear reduction, 0.97 for spur, herringbone, and helical gearing supported on anti-friction bearings, and 0.93 for spur, herringbone, and helical gearing supported on sleeve bearings (For worm gearing, consult the gear and hoist manufacturer.)

E_s = rope system efficiency per rotating sheave, 0.99 for rotating sheaves supported on anti-friction bearings, 0.98 for rotating sheaves supported on sleeve bearings

K_c = control factor, which is a correction value that accounts for the effects the control has on motor torque and speed; 1 for the majority of controls, such as AC wound rotor magnetic or static systems where there are no secondary permanent slip resistors, systems for squirrel cage motors, and constant potential magnetic systems with DC power shop supplies

K_c values for AC wound rotor systems, magnetic or static control, with secondary permanent slip resistors, are to be as follows:

$$K_c = \frac{\text{motor-rated full load, rpm}}{\text{motor-operating rpm, at rated torque with permanent slip resistors, when hoisting}}$$

K_c values for power supplies rectified on the hoist shall be determined by consulting with the motor and control manufacturers.

NUM-III-7950 Electrical

NUM-III-7951 General. All electrical equipment furnished shall conform to the applicable sections of the latest issue of the National Electrical Code, ANSI/NFPA 70. The owner shall specify the voltage, frequency, and phase of the power supply. The supply voltage shall be maintained within ±10% of the rated motor voltage at the hoist with motor operating at rated load.

NUM-III-7951.1 Hazardous Location. When hoists are used in hazardous locations as defined by the National Electrical Code, ANSI/NFPA 70 (latest issue) or other special codes, modifications or additional safety precautions not covered by this Standard may

Copyright ASME International
Provided by IHS under license with ASME
No reproduction or networking permitted without license from IHS
Not for Resale

Table NUM-III-7952-1 Standard Rated Motor Voltages

	Voltages		
Power Supply	Nominal System	Rated Motor Voltages	Permissible Motor Operating Range
AC, single phase 60 Hz	120	115	104 to 126
	240	230	207 to 253
AC, polyphase 60 Hz	208	200	180 to 220
	240	230	207 to 253
	480	460	414 to 506
	600	575	518 to 632
AC, polyphase 50 Hz	208	200	180 to 220
	230	220	198 to 242
	400	380	342 to 418
DC	125	115	104 to 126
	125	120	108 to 132
	250	230	207 to 253
	250	240	216 to 264

be required. Only hoists designed for the conditions encountered shall be used in these locations.

NUM-III-7951.2 Fungus Protection. In tropical areas or other warm and humid atmospheres, fungus growth may occur on unprotected organic materials or on accumulations of dust. There are materials and procedures that will minimize these effects.

NUM-III-7952 Motors

(a) Motors shall be reversible, with torque characteristics suitable for hoist or trolley service, and capable of operation at rated loads and speeds in accordance with the class of service specified.

(b) Temperature rise of motors shall be in accordance with the latest NEMA Standards for the class of insulation and enclosure used. The hoist manufacturer will assume 104°F (40°C) ambient temperature unless otherwise specified by the owner.

(c) All AC motors at rated frequency and all DC motors shall be capable of operation within ±10% of rated motor voltage, but not necessarily at rated voltage performance.

(d) Standard rated motor voltage shall be in accordance with Table NUM-III-7952-1.

(e) For nominal system voltage other than shown in Table NUM-III-7952-1, the rated motor voltage should not be less than 95% nor more than 100% of the nominal system voltage.

(f) For additional general motor requirements, see NUM-III-8422.

NUM-III-7953 Controllers

NUM-III-7953.1 Types of Control. The type of control supplied for a hoist and trolley shall result in operation complying with the performance as defined in NUM-G-3000. See NUM-III-8421 for control selection and requirements.

NUM-III-7953.2 VFD Hoist Controls

(a) The VFD control shall incorporate a speed feedback device to detect loss of speed control during any motor operating condition, unless the hoist has a mechanical control braking means. When speed feedback is provided, upon detection of unacceptable speed deviation or complete loss of speed feedback, the VFD shall post a fault, discontinue outputting voltage to the motor(s), and set the brake(s). Hoists with Mechanical Load Brakes are exempt from this requirement.

(b) Control dynamic braking shall be sized for a minimum of 150% of motor full load torque, but shall not, under any circumstances, be less than the torque (or corresponding current) limit setting of the VFD in the hoisting direction.

NOTE: Control dynamic braking on hoists with mechanical load brakes shall be sized such that the combined retarding torque in the lower direction of the dynamic braking and the mechanical load brake are equal to or greater than the torque (or corresponding current) limit setting of the VFD in the hoisting direction.

(c) Control shall sense sufficient motor torque (or corresponding current) before releasing holding brake(s)

Copyright ASME International
Provided by IHS under license with ASME
No reproduction or networking permitted without license from IHS
Not for Resale

(i.e., torque proving). Hoists with mechanical load brakes are exempt from this requirement.

(d) Control shall maintain speed control under all motor operating conditions to within ± 5% of the commanded speed.

(e) If specified by the owner, control shall be capable of operating at higher than base speed as a function of load (constant horsepower operation) for loads less than 100% rated load.

NUM-III-7953.3 Contactors. Each magnetic control shall have contactors sized for the specified service. Reversing contactors shall be interlocked to guard against line-to-line faults.

NUM-III-7953.4 Pendant Control

(a) Motion control actuators shall automatically return to the OFF position.

(b) The pendant control station shall be mechanically supported to protect the electrical conductors against strain.

(c) The pendant control station shall be clearly marked to indicate the function of each actuator.

(d) The order of control functions, unless otherwise specified and as applicable, from top to bottom, should be:

(1) stop–start (off–on, power off–power on) (the stop/off/power off control actuator shall be red)

(2) hoist

(3) trolley

(4) other functions

(e) Any pendant station that might present a hazard to the operator if a ground fault occurs shall be grounded.

(f) The maximum voltage in the pendant control station shall be 150 VAC or 300 VDC.

(g) Unless otherwise specified by the owner, the control station shall be 3 to 4 ft above the specified operating level.

NUM-III-7953.5 Pull-Cord Control

(a) Pull-cord control, when furnished, shall consist of a self-centering, return-to-neutral controller or master switch for the motion of hoist or trolley. Two nonconducting pull cords with suitable handles, clearly marked for direction, shall be provided for operation of each controller or master switch.

(b) Unless otherwise specified by the owner, the pull-cord control station shall be 3 to 5 ft above the specified operating level.

NUM-III-7954 Control Enclosures. Control enclosures, unless otherwise specified by the owner, shall be NEMA Type 1, general purpose for indoor applications, in accordance with NEMA ICS 6. Other types, as defined by NEMA, include but are not limited to:

(a) NEMA Type 3: watertight, dust tight, and sleet (ice) resistant; outdoor.

(b) NEMA Type 3R: rainproof and sleet resistant; outdoor.

(c) NEMA Type 4: watertight and dust tight; indoor and outdoor.

(d) NEMA Type 4X: watertight, dust tight, and corrosion resistant; indoor and outdoor.

(e) NEMA Type 7: Class I, Groups A, B, C, and D; indoor hazardous locations (explosive atmosphere).

(f) NEMA Type 9: Class II, Groups E, F, and G; indoor hazardous locations (explosive atmosphere).

(g) NEMA Type 12: industrial use; dust tight and drip tight; indoor.

NUM-III-7955 Resistors. Resistors, when furnished, shall have sufficient thermal capacity for the class of service specified. Enclosures for resistors shall provide means for heat dissipation and shall be installed to minimize the accumulation of combustible matter. Provision shall be made to contain broken resistor parts or molten metal.

NUM-III-7956 Current Conductor System. Current conductor systems are not normally supplied with electric wire rope hoists. When required, they must be specified by the owner. Standard systems include the following:

(a) flexible cable

(b) coiled cord

(c) festooned cable arrangement

(d) cable reel

(e) rigid conductor

NUM-III-7960 Pneumatic

NUM-III-7961 Air Motors. The air motor shall be an air-driven piston or rotary vane type and shall be provided with an air inlet connection fitted for the use of air hose assemblies. Also, the air motor shall be provided with an oiler and air filter between the motor and the air inlet connection. The motor shall have adequate capacity to lift 125% of the rated load.

NUM-III-7962 Air Motor Controls. Hoists and air-operated trolleys shall have pendant, pull, or rod control. Control actuators shall automatically return to the off position when released. Unless otherwise specified by the owner, the control station shall be 3 to 5 ft above the specified operating level.

Copyright ASME International
Provided by IHS under license with ASME
No reproduction or networking permitted without license from IHS
Not for Resale

NUM-III-7962.1 Pendant Control. The pendant control station shall be supported to protect the pneumatic hoses and connections against strain. The pendant control station shall be clearly marked to indicate the function of each actuator.

NUM-III-7962.2 Pull Control. Pull control shall consist of two pull chains or cords with suitable handle(s) clearly marked for direction.

NUM-III-7962.3 Rod Control. Rod control shall permit control of hoist or trolley (air operated) motion by linear or rotary movement of the rod handle, or a combination of both. Rod handle shall be clearly marked for direction of motion.

NUM-III-7970 Hoist Marking

(a) The rated load of the hoist shall be marked on the hoist or load block.

(b) The hoist shall be marked with the following information:

(1) name of the manufacturer

(2) manufacturer's model or serial number

(3) rated air pressure (where applicable)

(c) All hoists shall have affixed to the hoist, hand chain, controls, or load block in a readable position, labels or embossed areas displaying information concerning operating procedures as follows:

(1) the word "WARNING" or other legend designed to bring the information to the attention of the operator, and

(2) cautionary language against

(a) lifting more than the rated load;

(b) operating hoist when load is not centered under the hoist;

(c) operating hoist with twisted, kinked, or damaged wire rope or chain;

(d) operating damaged or malfunctioning hoist;

(e) operating hoist with a wire rope or chain that is not properly seated in its groove or sprocket;

(f) in the case of manual chain hoists, operating the hoist with other than manual power;

(g) lifting people or lifting loads over people; and

(h) removing or obscuring warning label.

Copyright ASME International
Provided by IHS under license with ASME
No reproduction or networking permitted without license from IHS Not for Resale

Section NUM-III-8000
Common Requirements and Criteria

NUM-III-8100 DESCRIPTION

The common equipment requirements included under this Section are divided into four categories: structural, mechanical, electrical, and inspection and testing.

The requirements of Section NUM-III-8000 apply to all cranes and monorails as described in the specific equipment Sections, NUM-III-2000 through NUM-III-6000. (Requirements for hoists and underhung trolleys are given in Section NUM-III-7000.)

NUM-III-8200 STRUCTURAL

NUM-III-8210 General

This section covers the design, design criteria, materials, and fabrication procedures for the structural components that apply for all Type III equipment.

NUM-III-8211 Nomenclature. All terms and definitions used in equations are defined in their respective sections.

NUM-III-8212 Descriptions of Loads

(a) Load Categories. Loads acting on the structure are divided into the following four categories:

(1) principal loads, such as dead loads, lifted loads, and inertia;

(2) additional loads, such as dead loads, lifted loads, and inertia forces;

(3) extraordinary loads, such as stored wind loads and collision forces; and

(4) extreme environmental loads, such as tornado wind loads.

(b) Other Loads. In addition to the load categories above, torsional forces and moments, bridge end truck loads, and abnormal event loads shall be considered during design. Test loads are specified in NUM-III-8583.

NUM-III-8212.1 Principal Loads

(a) Dead Load (DL). The weight of all effective parts of the bridge structure, the machinery parts, and the fixed equipment supported by the structure.

(b) Trolley Load (TL). The weight of the trolley and the equipment attached to the trolley.

Table NUM-III-8212.1-1
Dead Load Factor, *DLF*

Travel Speed, fpm	*DLF*
Up to 200	1.1
Over 200	1.2

GENERAL NOTE: Dead load factor, *DLF*, from CMAA 74.

(c) Lifted Load (LL). The lifted load consists of the working load and the weight of the lifting devices used for handling and holding the working load, such as the load block, lifting beam, bucket, magnet, grab, and the other supplemental devices.

(d) Vertical Inertia Forces. The vertical inertia forces include those due to the motion of the cranes or crane components and those due to lifting or lowering of the hoist load. These additional loadings may be included in a simplified manner by the application of a separate factor for the dead load (DLF) and for the hoist load (HLF) by which the vertical acting loads, the member forces, or the stresses due to them must be multiplied.

(1) Dead Load Factor (DLF). This factor covers only the dead loads of the crane, trolley, and its associated equipment and shall be taken according to Table NUM-III-8212.1-1.

(2) Hoist Load Factor (HLF). This factor applies to the motion of the rated load in the vertical direction, and covers inertia forces, the mass forces due to the sudden lifting of the hoist load, and the uncertainties in allowing for other influences. The hoist load factor is 0.5% of the hoisting speed in feet per minute, but not less than 15% or more than 50%, except for bucket and magnet cranes for which the impact value shall be taken as 50% of the rated capacity of the bucket or magnet hoist.

$$HLF = 0.15 \le 0.005 \text{ (hoist speed)} \le 0.5$$

(e) Inertia Forces From Drives (IFD). The inertia forces occur during acceleration or deceleration of horizontal drive motions and depend on the driving

Copyright ASME International
Provided by IHS under license with ASME
No reproduction or networking permitted without license from IHS
Not for Resale

and braking torques applied by the drive units and brakes during each cycle.

The lateral load due to acceleration or deceleration shall be a percentage of the vertical load and shall be considered as 7.8 times the lateral acceleration or deceleration rate (ft/sec^2) but not less than 2.5% of the vertical load. This percentage is to be applied to both the live and dead loads, exclusive of the end trucks. The live load shall be located in the same position as when calculating the vertical moment. The moment of inertia of the entire girder section about its vertical axis shall be used to determine the stresses due to lateral forces. The inertia forces during acceleration and deceleration shall be calculated in each case with the trolley in the worst position for the component being analyzed.

NUM-III-8212.2 Additional Loads

(a) Operating Wind Load (WLO). Lateral load due to wind shall be considered as an operating load of 5 lbs per square ft of projected area. Where multiple surfaces are exposed to the wind, such as crane girder and auxiliary girder, and the horizontal distance between surfaces is greater than the depth of the member on the windward side, consideration shall be given to increasing the effective area exposed to the wind. For single surfaces, such as cabs, a projected area shall be considered to be 1.2 times the projected area to account for negative pressure on the far side of the enclosure.

(b) Forces Due to Skewing (SK). When wheels roll along a rail, the horizontal forces normal to the rail and those tending to skew the structure shall be taken into consideration. The horizontal forces shall be obtained by multiplying the vertical load exerted on each wheel by coefficient S_{sk}, which depends on the ratio of the span to the wheel base. (See Fig. NUM-III-8212.2-1.) The wheel base is the distance between the outermost wheels.

NUM-III-8212.3 Extraordinary Loads

(04)

(a) Stored Wind Load (WLS). This is the maximum wind that a crane is designed to withstand during out of service condition. The speed and test pressure varies with the height of the crane above the surrounding ground level, geographical location, and degree of exposure to prevailing winds (see SEI/ASCE 7).

(b) Collision Forces (CF). Special loading of the crane structure, resulting from the bumper stops, shall be calculated with crane at 0.4 times the rated speed, assuming the bumper system is capable of absorbing the energy within its design stoke. Load suspended from lifting equipment and free oscillating load need not be taken into consideration. Where the load cannot

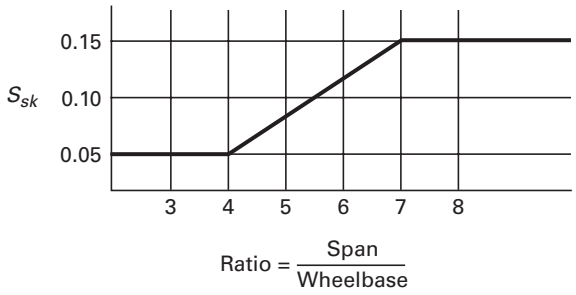

Fig. NUM-III-8212.2-1
Wheel-Skewing Forces (From CMAA 74)

swing, the bumper effect shall be calculated in the same manner, taking into account the value of the load. The kinetic energy (*KE*) released on the collision of two cranes with the moving masses of M_1, M_2, and a 40% maximum traveling speed of V_{T1} and V_{T2} shall be determined from the following equation:

$$KE = \frac{M_1 M_2 (0.4 V_{T1} + 0.4 V_{T2})^2}{2 (M_1 + M_2)} \quad (7)$$

The bumper forces shall be distributed in accordance with the bumper characteristics and the freedom of the motion of the structure with the trolley in its worst position. Should the crane application require that maximum deceleration rates and/or stopping forces be limited due to suspended load or building structure considerations, or if bumper impact velocities greater than 40% of maximum crane velocity are to be provided for, such conditions shall be defined at the time of the crane purchase.

NUM-III-8212.4 Extreme Environmental Loads. Tornado wind loads (*WLT*) are not applicable to Type III cranes unless specifically required by the owner. The wind speed varies with the height of the crane above the surrounding ground level, geographical location, and degree of exposure. Additional tornado-generated loads that should be considered are pressure-drop and tornado missiles.

NUM-III-8212.5 Torsional Forces and Moments

(a) Due to the Starting and Stopping of the Bridge Motors. The twisting moment due to the starting and stopping of bridge motors shall be considered as thestarting torque of the bridge motor at 200% of full load torque multiplied by the gear ratio between the motor and cross shaft.

(b) Due to Vertical Loads. Torsional moment due

Copyright ASME International
Provided by IHS under license with ASME
No reproduction or networking permitted without license from IHS
Not for Resale

Table NUM-III-8213-1 Load Designations

Load	Load Designation
Trolley Dead Load	*TL*
Bridge Dead Load	*DL*
Rated Load	*LL*
Inertia Forces From Drives	*IFD*
Forces Due to Skewing	*SK*
Operating Wind Load	*WLO*
Stored Wind Load	*WLS*
Tornado Wind Load	*WLT*

to vertical forces acting eccentric to the vertical neutral axis of the girder shall be considered as those vertical forces multiplied by the horizontal distance between the centerline of the forces and the shear center of the girder.

(c) Due to Lateral Loads. The torsional moment due to the lateral forces acting eccentric to the horizontal neutral axis of the girder shall be considered as those horizontal forces multiplied by the vertical distance between the centerline of the forces and the shear center of the girder.

NUM-III-8212.6 Abnormal Event Load (A_e). Abnormal event loads are loads caused by failure of plant equipment that imposes jet or missile loads on the crane. The owner shall be responsible for the effects of, and shall establish the criteria for, these loads.

NUM-III-8213 Load Combinations. The following tabulated load designations are described in NUM-III-8212 and are listed in Table NUM-III-8213-1. The various load combinations, utilizing the load designations, are listed herein. The Crane Operational Loads and the Construction Load combinations are applicable to the type III cranes. Also listed is the loading combination involving tornado wind, which is to be used if required by the owner.

Principal Loads (stress level 1)

Case 1: Crane in regular use under principal loading (stress level 1)

$$DL(DLF_B) + TL(DLF_T) + LL(1 + HLF) + IFD \quad (8)$$

where DLF_B and DLF_T refer to the bridge and trolley load factors.

Additional Loads (stress level 2)

Case 2: Crane in regular use under principal and additional loading (stress level 2)

$$DL(DLF_B) + TL(DLF_T) + LL(1 + HLF) + IFD + WLO + SK \quad (9)$$

where DLF_B and DLF_T refer to the bridge and trolley load factors.

Extraordinary Loads (stress level 3)

Case 3: Crane subjected to out-of-service wind

$$DL + TL + WLS \quad (10)$$

Crane in collision

$$DL + TL + LL + CF \quad (11)$$

Extreme Environmental Loads (stress level 4)

Case 4: Crane subject to tornado wind load

$$TL + DL + WLT \quad (12)$$

NUM-III-8214 Tolerances. Dimensions on the clearance drawings are the maximum dimensions of the crane and shall not be exceeded by the manufacturer. Height and end dimensions shall be shown in relationship to the operating surface and centerline of the beam or rail. Cumulative measurements of crane components are permitted.

The runway shall be straight, parallel, level, and at the same elevation within the tolerances given in Figs. NUM-III-8214-1 or NUM-III-8214-2. The crane manufacturer shall design the crane to operate properly within the runway tolerances given in Figs. NUM-III-8214-1 or NUM-III-8214-2.

NUM-III-8220 Materials and Connections

All materials of the structural components of the crane shall be an accepted type, suitable for the purpose for which the materials are to be used, and shall be in compliance with any additional requirements specified herein for the materials.

NUM-III-8221 Base Materials. The base materials for the components of Type III cranes shall be structural steel and shall conform to ASTM A 36 specifications or shall be an accepted type for the purpose for which the steel is to be used and for the operations to be performed on it.

Copyright ASME International
Provided by IHS under license with ASME
No reproduction or networking permitted without license from IHS
Not for Resale

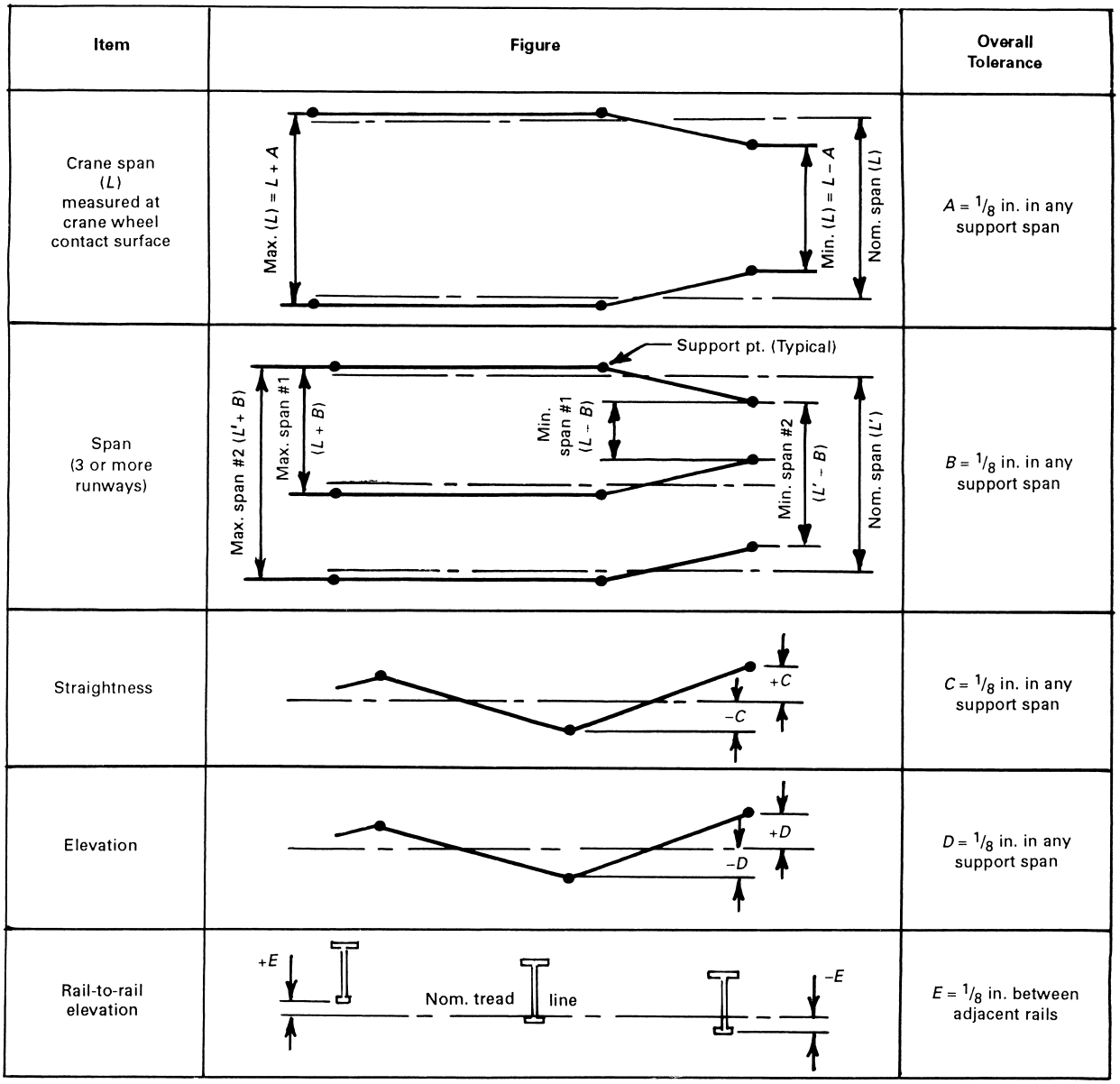

Fig. NUM-III-8214-1 Runway Alignment Tolerance for Patent Track

NUM-III-8222 Fastener Materials

(a) The fastener materials for structural components of cranes shall be in accordance with NUM-III-8231.5.

(b) The fastener finish, and tolerances, shall be suitable for the type of connection in which it is employed.

NUM-III-8223 Welding Materials. All welding materials shall be in compliance with the requirements of AWS D1.1 or D14.1, as applicable.

NUM-III-8224 Connections

NUM-III-8224.1 Welded Connections. Welded connections shall comply with the requirements of AWS D1.1 or D14.1, as applicable.

NUM-III-8224.2 Bolted Connections

NUM-III-8224.2.1 Structural Joints Using ASTM A 325 or A 490 Bolts. Structural joints using

Copyright ASME International
Provided by IHS under license with ASME
No reproduction or networking permitted without license from IHS
Not for Resale

Item	Figure	Overall Tolerance	Maximum Rate of Change
Crane span (L) measured at crane wheel contact surface	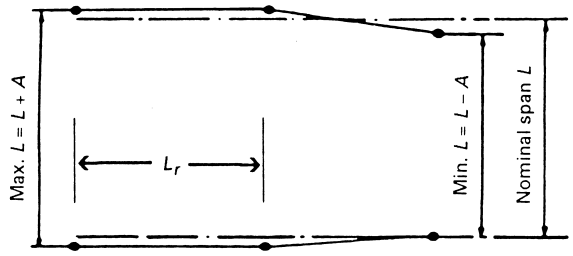	$L \le 50$ ft $A = 3/16$ in. $L > 50$ ft ≤ 100 ft $A = 1/4$ in. $L > 100$ ft $A = 3/8$ in.	1/4 in. in 20 ft 0 in.
Straightness (B)	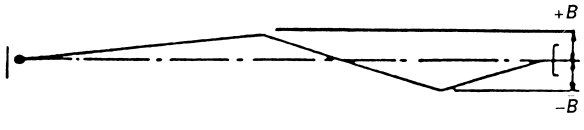	$B = 3/8$ in.	1/4 in. in 20 ft 0 in.
Elevation (C)		$C = 3/8$ in.	1/4 in. in 20 ft 0 in.
Top-running transverse rail-to-rail elevation (D)	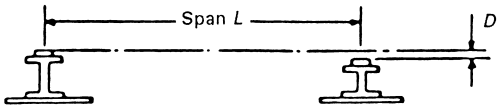	$L \le 50$ ft $D = \pm 3/16$ in. $L > 50$ ft ≤ 100 ft $D = \pm 1/4$ in. $L > 100$ ft $D = \pm 3/8$ in.	1/4 in. in 20 ft 0 in.
Transverse girder-to-girder elevation under-running (D)	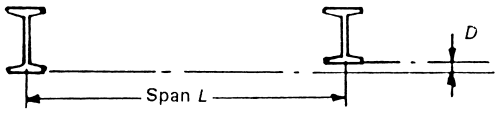		

Fig. NUM-III-8214-2 Runway Alignment Tolerance (From CMAA 74)

ASTM A 325 or A 490 bolts shall be designed and installed in accordance with the "Specification for Structural Joints Using ASTM A 325 and A490 Bolts," as included in the AISC Manual of Steel Construction, Allowable Stress Design. Bolt holes shall not be burned. Standard holes shall have a maximum diameter 1/16 in. in excess of the nominal bolt diameter. Holes for alignment (bound) bolts shall be reamed to close tolerances as required. Slotted bolt holes shall not be used for connections of end trucks.

NUM-III-8224.2.2 Structural Joints Using Bolts Other Than ASTM A 325 or A 490. Structural joints using bolts other than ASTM A 325 or A 490 shall be bearing type, and shall comply with the requirement for non-high-strength bolts specified in the "Specification for Structural Steel for Buildings—Allowable Stress Design and Plastic Design," as included in the AISC Manual of Steel Construction, Allowable Stress Design. All bolts shall be torqued to a pre-tension load on the bolt of 60 to 70% of the minimum yield strength of the bolt materials. Standard holes shall have a maximum diameter 1/16 in. in excess of the nominal bolt diameter. Holes for alignment (bound) bolts shall be reamed to close tolerances as required.

NUM-III-8224.2.3 Gauge and Edge Distances. The minimum gauge between centers of bolt holes and minimum and maximum edge distances from the center of a bolt hole to any edge shall be as stipulated in "Specification for Structural Steel for Buildings—Allowable Stress Design and Plastic Design," as included in the AISC Manual of Steel Construction, Allowable Stress Design.

Copyright ASME International
Provided by IHS under license with ASME
No reproduction or networking permitted without license from IHS Not for Resale

Table NUM-III-8231.1-1 Allowable Stresses (Members Not Controlled by Buckling)

Stress Loading and Case (all expressed in terms of σ_y)	Stress Type			
	Tension	Compression [Note (1)]	Shear	Bearing
Principal — 1	0.60	0.60	0.35	0.75
Additional — 2	0.66	0.66	0.375	0.80
Extraordinary — 3	0.75	0.75	0.43	0.90
Extreme environment — 4	0.90	0.90	0.50	n/a

NOTE:
(1) For gross section.

NUM-III-8224.3 Field Connections. All field connections of structural components shall be bolted unless otherwise approved by the owner. The manufacturer shall provide sufficient information on drawings or in installation manuals on the requirements for all field connections.

NUM-III-8230 Design Criteria

NUM-III-8231 Basic Allowable Stresses for Structural Steel Members

NUM-III-8231.1 Members Not Controlled by Buckling. For members not controlled by buckling, the basic allowable stresses in structural steel members of the crane shall not exceed the values in Table NUM-III-8231.1-1.

(04) NUM-III-8231.2 Compression Members Controlled by Buckling. For compression members with an equivalent slenderness ratio.

$$\frac{kl}{r} < C_c \tag{13}$$

where

$$C_c = \sqrt{\frac{2\pi^2 E}{\sigma_y}}$$

and

E = modulus of elasticity
k = effective length factor
l = unbraced length of compression member
r = radius of gyration of member
σ_y = yield point

Table NUM-III-8231.2-1 Modifying Coefficient, *N*

Principal	Additional	Extraordinary	Extreme Environmental
1.2	1.2	0.9	0.67

C_c = column slenderness ratio separating elastic and inelastic buckling

The allowable axial compression stress σ_a is:

$$\sigma_a = \left\{ \frac{\left[1 - \left(\frac{kl}{r}\right)^2\right]}{2\,C_c^{\,2}} \right\} \left(\frac{\sigma_y}{DF}\right) \tag{14}$$

where

DF = design factor

The required design factor shall be equal to:

$$FS = N\left[\frac{5}{3} + \frac{3}{8}\left(\frac{\frac{kl}{r}}{C_c}\right) - \frac{1}{8}\left(\frac{\frac{kl}{r}}{C_c}\right)^3\right] \tag{15}$$

Values of N, the modifying coefficient for each loading condition, can be found in Table NUM-III-8231.2-1.

For compression members with an equivalent slenderness ratio,

Copyright ASME International
Provided by IHS under license with ASME
No reproduction or networking permitted without license from IHS
Not for Resale

$$\frac{kl}{r} > C_c \tag{16}$$

the allowable axial compression stress shall not exceed the value:

$$\sigma_a = \frac{12\pi^2 E}{23N\left(\frac{kl}{r}\right)^2} \tag{17}$$

NUM-III-8231.3 Bending Stress. The allowable bending stress shall conform to AISC Part 5, Chapter F, "Beams and Other Flexural Members," divided by 1.12*N* for the different loading conditions.

NUM-III-8231.4 Welds. Basic allowable stresses in welds shall be as specified in AWS D1.1 or D14.1. Allowable stresses for all types of welds may be increased for extraordinary load combinations by a factor of 1.33 and increased for extreme environmental load combinations by a factor of 1.50.

NUM-III-8231.5 Bolts

(a) ASTM A 325 or A 490 Bolts. Allowable working stresses for operational or construction loads shall be in accordance with the "Specification for Structural Joints Using ASTM A 325 and A 490 Bolts," as included in the AISC Manual of Steel Construction Allowable Stress Design. Allowable working stresses for other loadings shall be as follows:

(1) Bearing-Type Joints. Allowable working stresses for bearing-type joints may be increased by a factor of 1.33 for extraordinary loadings and by a factor of 1.50 for extreme environmental loadings.

(2) Friction-Type Joints. Allowable working stresses for friction-type joints shall not be increased for extraordinary loadings or extreme environmental loadings.

(b) Bolts Other Than ASTM A 325 or A 490. Allowable stresses shall be in accordance with Table NUM-III-8231.5-1.

Table NUM-III-8231.5-1
Bolt Allowable Stresses

Loading Condition (expressed in terms of ultimate strength)	Stress Type	
	Tension	Shear
Principal	0.33	0.17
Additional	0.33	0.17
Extraordinary	0.44	0.23
Extreme environmental	0.50	0.26

NUM-III-8232 Combined Stresses

NUM-III-8232.1 Axial Compression and Bending. Members subjected to both axial compression and bending stresses shall satisfy the following requirements:

$$\frac{\sigma}{\sigma_a} + \frac{C_{mx}\,\sigma_{bx}}{\left(1 - \frac{\sigma}{\sigma_{ex}}\right)\sigma_{abx}} + \frac{C_{my}\,\sigma_{by}}{\left(1 - \frac{\sigma}{\sigma_{ey}}\right)\sigma_{aby}} \le 1.0 \tag{18}$$

$$\frac{\sigma}{\sigma_a} + \frac{\sigma_{bx}}{\sigma_{abx}} + \frac{\sigma_{by}}{\sigma_{aby}} \le 1.0 \tag{19}$$

When $(\sigma/\sigma_a) \le 0.15$, the following equation may be used in lieu of the above equations:

$$\frac{\sigma}{\sigma_a} + \frac{\sigma_{bx}}{\sigma_{abx}} + \frac{\sigma_{by}}{\sigma_{aby}} \le 1.0 \tag{20}$$

In Equations (18), (19), and (20), the subscripts x and y, combined with subscripts b, m, and e indicate the axis of bending about which a particular stress or design property applies, and

σ_a, σ_{ab} = allowable axial and bending stresses, respectively.

(See NUM-III-8231.1.)

It is to be noted that:

$\sigma_a = \sigma_{ab}$ in NUM-III-8231.1 and NUM-III-8231.2.

$\sigma_{ac} = \sigma_a$ as given in NUM-III-8231.1 only.

$$\sigma_e = \frac{12\pi^2 E}{23N\left(\frac{kl}{r}\right)^2} \tag{21}$$

(In the expression for σ_e: l is the actual unbraced length in the plane of bending and r is the corresponding radius of gyration, k is the effective length factor in the plane of bending, and N is a loading condition factor given in NUM-III-8231.2.)

σ = computed axial stress

C_m = a coefficient whose value shall be as given in (a), (b), and (c) below

Copyright ASME International
Provided by IHS under license with ASME
No reproduction or networking permitted without license from IHS
Not for Resale

σ_b = computed compressive bending stress at the point under consideration

(a) For compression members in frames subject to joint translation, $C_m = 0.85$

(b) For rotationally restrained compression members in frames braced against joint translation and not subject to transverse loading between their supports in the plane of bending,

$$C_m = 0.6 - 0.4\left(\frac{M_1}{M_2}\right) \tag{22}$$

but not less than 0.4., where M_1 / M_2 is the ratio of the smaller to larger moments at the ends of that portion of the member unbraced in the plane of bending under consideration. M_1 / M_2 is positive when the member is bent in reverse curvature and negative when it is bent in a single curvature.

(c) For compression members in frames braced against joint translation in the plane of loading and subjected to transverse loading between their supports, the value of C_m may be determined by analysis; however, in lieu of such analysis, the following values may be used:

(1) for members whose ends are restrained against rotation in the plane of bending, $C_m = 0.85$; and

(2) for members whose ends are unrestrained against rotation in the plane of bending, $C_m = 1.0$.

NUM-III-8232.2 Axial Tension and Bending.

Members subject to both axial tension and bending stresses shall be proportioned at all points along their length to satisfy the following equation:

$$\frac{\sigma_t}{\sigma_{at}} + \frac{\sigma_{bx}}{\sigma_{abx}} + \frac{\sigma_{by}}{\sigma_{aby}} \le 1.0 \tag{23}$$

where

σ_t = the computed axial tension stress

σ_{at} = the allowable axial tension stress as determined from Table NUM-III-8231.1-1

σ_{bx} = the computed bending stress about the member's x-axis

σ_{by} = the computed bending stress about the member's y-axis

σ_{abx} = the allowable bending stress about the member's x-axis

σ_{aby} = the allowable bending stress about the member's y-axis

However, the computed bending compressive stress arising from an independent load source relative to the axial tension, taken above, shall not exceed the applicable value required in NUM-III-8231.3.

NUM-III-8232.3 Local Bending of Flanges Due to Wheel Loads

(a) Each wheel load shall be considered as a concentrated load applied at the center of the wheel contact with the flange [see Fig. NUM-III-8232.3-1, sketch (a)]. Local flange bending stresses in the lateral (x) and longitudinal (y) direction at certain critical points may be calculated from the following formulas. Other suitable formulas/analysis in lieu of the one below may be adopted to address the local flange bending stresses.

Underside of flange at flange-to-web transition, Point 0:

$$\sigma_{x0} = C_{x0}\frac{P}{t_a^2} \tag{24}$$

$$\sigma_{y0} = C_{y0}\frac{P}{t_a^2} \tag{25}$$

Underside of flange directly beneath wheel contact point, Point 1:

$$\sigma_{x1} = C_{x1}\frac{P}{t_a^2} \tag{26}$$

$$\sigma_{y1} = C_{y1}\frac{P}{t_a^2} \tag{27}$$

Topside of flange at flange-to-web transition, Point 2:

$$\sigma_{x2} = -\sigma_{x0} \tag{28}$$

$$\sigma_{y2} = -\sigma_{y0} \tag{29}$$

For tapered flange sections [see Fig. NUM-III-8232.3-1, sketch (b)]:

$$C_{x0} = -1.096 + 1.095\lambda + 0.192e^{-6.0\lambda} \tag{30}$$

$$C_{x1} = 3.965 - 4.835\lambda - 3.965e^{-2.675\lambda} \tag{31}$$

$$C_{y0} = -0.981 - 1.479\lambda + 1.120e^{1.322\lambda} \tag{32}$$

$$C_{y1} = 1.810 - 1.150\lambda + 1.060e^{-7.70\lambda} \tag{33}$$

$$t_a = t_f - \left(\frac{b}{24}\right) + \left(\frac{a}{6}\right) \tag{34}$$

for standard "S" section, where

t_f = published flange thickness for standard "S" section, in.

Copyright ASME International
Provided by IHS under license with ASME
No reproduction or networking permitted without license from IHS
Not for Resale

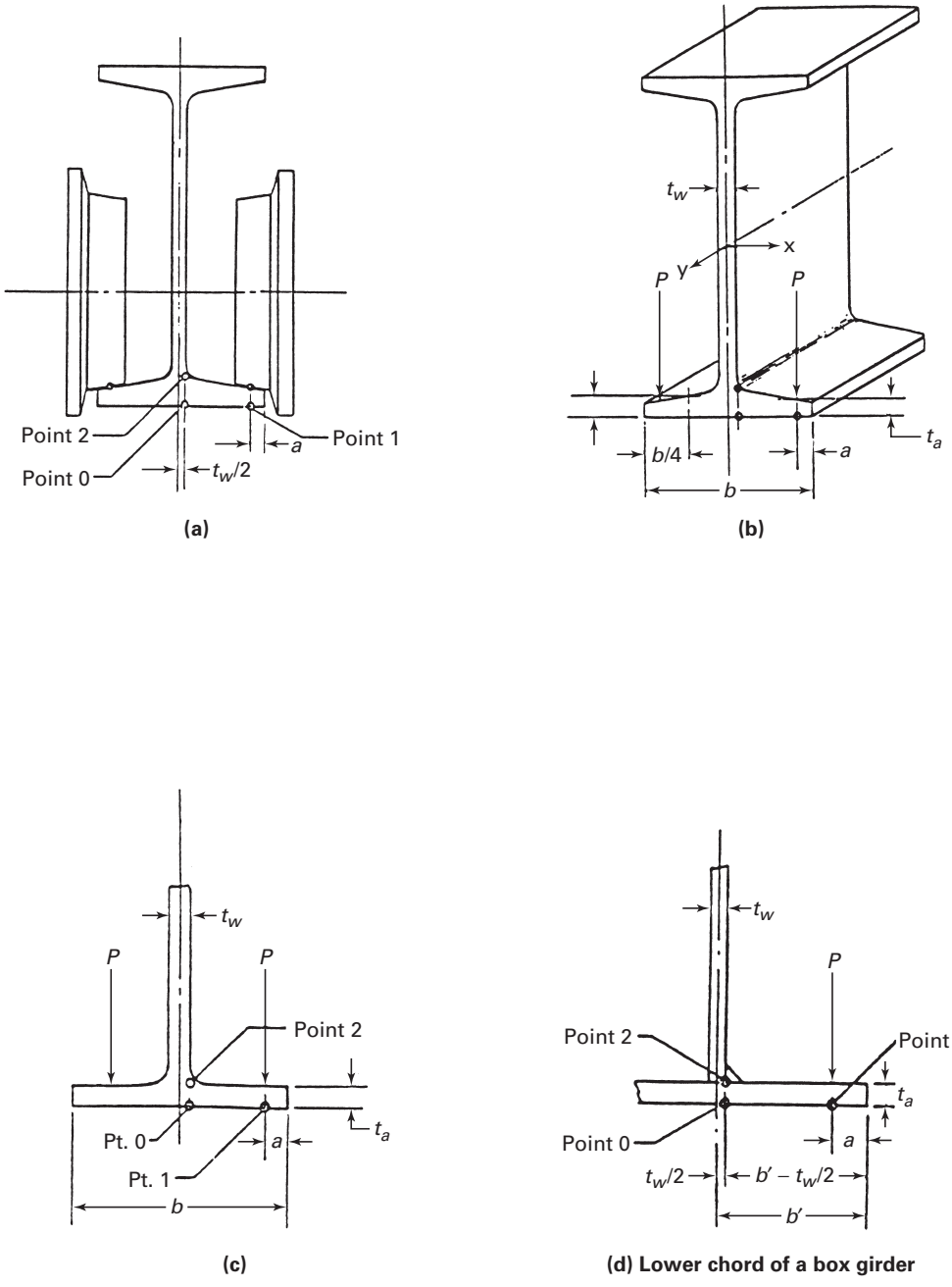

Fig. NUM-III-8232.3-1 Local Bending of Flanges Due to Wheel Loads (From CMAA 74)

Copyright ASME International
Provided by IHS under license with ASME
No reproduction or networking permitted without license from IHS
Not for Resale

For parallel flange section [Fig. NUM-III-8232.3-1, sketches (c) and (d)]:

$$C_{x0} = -2.110 + 1.977\lambda + 0.0076e^{6.53\lambda} \quad (35)$$

$$C_{x1} = 10.108 - 7.408\lambda - 10.108e^{-1.364\lambda} \quad (36)$$

$$C_{y0} = 0.050 - 0.580\lambda + 0.148e^{3.015\lambda} \quad (37)$$

$$C_{y1} = 2.230 - 1.490\lambda + 1.390e^{-18.33\lambda} \quad (38)$$

For single-web symmetrical sections [Fig. NUM-III-8232.3-1, sketches (b) and (c)]:

$$\lambda = \frac{2a}{b - t_w} \quad (39)$$

where

b = section width across flanges, in.

For other cases [Fig. NUM-III-8232.3-1, sketch (d)]:

$$\lambda = \frac{a}{b' - \left(\frac{t_w}{2}\right)} \quad (40)$$

where

P = load per wheel including *HLF*, lb
a = distance from edge of flange to point of wheel load application, in. (center of wheel contact)
e = Napierian base = 2.71828
b' = distance from centerline of web to edge of flange, in.
t_a = flange thickness at point of load application, in.
t_w = web thickness

NOTE: If ½ b–a < centerline distance between adjacent wheels, then the load P is equal to the maximum single wheel load without considering the effect of the adjacent wheel. Conversely, if ½ b–a ≥ centerline distance between adjacent wheels, then the loading of the two adjacent wheels must be combined into a single load.

(b) The localized stresses due to local bending effects imposed by wheel loads calculated at points 0 and 1 are to be combined with the stresses due to Case 2 loading specified in NUM-III-8213 of this specification.

When calculating the combined stress, the flange bending stresses are to be diminished to 75% of the value calculated per NUM-III-8232.3(a).

The combined stress value (σ^t) obtained by the method prescribed in NUM-III-8232.3(f) shall not exceed the allowable Case 2 stress level of $0.66\sigma_y$, where σ_y = yield strength of the material.

(c) Additionally, in the case of welded plate girders only, the localized stresses on the top side of the flange at the flange-to-web transition (Point 2) are to be combined with the stresses due to the Case 2 loading specified in NUM-III-8213 of this specification.

The combined stress value (σ_v) in the weld at Point 2 obtained by the method prescribed in NUM-III-8232.3(f) shall not exceed the allowable weld stress specified in NUM-III-8224.1, nor shall the stress range in the weld exceed the value specified in Table NUM-III-8234.1-1 for joint category E.

(d) The local flange bending criteria per section NUM-III-8232.3 is to be met in addition to the general criteria of NUM-III-8213 and NUM-III-8231.

(e) At load transfer points, consideration should be given to lower flange stresses that are not calculable by the formulae presented in NUM-III-8232.3.

(f) Combined Stresses. Where state of combined plane stresses exists, the reference stress σ_t can be calculated from the following formula:

$$\sigma_t = \sqrt{\sigma_x^2 + \sigma_y^2 - \sigma_x\sigma_y + 3\tau_{xy}^2} \le \sigma_{all} \quad (41)$$

where

σ_x, σ_y = normal stress in respective x and y directions
T_{xy} = shear stress in plane
σ_{all} = allowable stress

For welds, the maximum combined stress σ_v shall be calculated as follows:

$$\sigma_v = \tfrac{1}{2}\left(\sigma_x + \sigma_y\right) \pm \tfrac{1}{2}\sqrt{(\sigma_x - \sigma_y)^2 + 4\tau^2} \le \sigma_{all} \quad (42)$$

See NUM-C-3100 for lower flange bending calculation example.

NUM-III-8232.4 Shear and Tension of Bolts

(a) Bolts subject to combined shear and tension shall be so proportioned that the tension stress, in pounds per square inch, produced by forces applied to the connected parts, shall not exceed the allowable tension value, σ_{at}.

For A 325 bolts in bearing-type joints:

$$\sigma_{at} = 55{,}000\ R - 1.8\ \tau \le 44{,}000\ R \quad (43)$$

For A 490 bolts in bearing-type joints:

$$\sigma_{at} = 68{,}000\ R - 1.8\ \tau \le 54{,}000\ R \quad (44)$$

For other bolting materials in bearing-type joints:

Copyright ASME International
Provided by IHS under license with ASME
No reproduction or networking permitted without license from IHS
Not for Resale

Table NUM-III-8232.4-1
Bolt Shear and Tension Factor, *R*

Principal	Additional	Extraordinary	Extreme Environmental Conditions
1	1	1.33	1.50

$$\sigma_{at} = 0.6\ \sigma_{yR} - 1.6\ \tau \quad (45)$$

where τ (the shear stress produced by the same forces) shall not exceed the value for the shear given in NUM-III-8231.5. σ_y is the yield stress (the proof stress may be used). R is given in Table NUM-III-8232.4-1.

(b) For bolts used in friction-type joints, the shear stress (τ_a) allowed in NUM-III-8231.5 shall be reduced so that:

for A 325 bolts:

$$\tau_a \le 15{,}000\ (1 - \sigma_\tau A_b / T_b) \quad (46)$$

for A 490 bolts:

$$\tau_a \le 20{,}000\ (1 - \sigma_\tau A_b / T_b) \quad (47)$$

where σ_τ is the average tensile stress due to a direct load applied to all of the bolts in a connection, T_b is the specified pretension load of the bolt, and A_b is the tensile stress area.

In friction-type joints, the allowable shear stress shall not be increased due to environmental conditions.

NUM-III-8232.5 Shear and Bending. The maximum combined shear stress due to shear, bending, and direct stresses shall not exceed the allowable values for shear as given in NUM-III-8231.1.

NUM-III-8233 Buckling

NUM-III-8233.1 Local Buckling or Crippling of Flat Plates. The structural design of the crane to avoid local buckling of plates shall conform to ASME NOG-1 paras. NOG-4331 through 4332.1.

(04) **NUM-III-8233.2 Proportion for Fabricated Box Girders.** The ratio of l/h shall not exceed 25; the ratio of l/b shall not exceed 60; and the ratio of b/t shall not exceed:

$$\sqrt{\frac{(2.62 \times 10^7)\ K_\sigma}{\sigma_P}} \times \frac{2}{DFB} \text{ (operating condition)} \quad (48)$$

(where b is the unsupported plate width between longitudinal stiffeners, webs, or coverplate) or $30.99\ \sqrt{K_\sigma(2/DFB)}$ operating condition for A 36 steel.

where

l = span, in.
h = depth of web, in.
b = distance between web plates, in.
t = thickness of web plate

(04) **NUM-III-8233.3 Spacing of Transverse Stiffeners.** The spacing of the transverse stiffeners a, in., shall not exceed the amount given by the formula:

$$a = \frac{11{,}068\ t}{\sqrt{\tau_c}} \quad (49)$$

where

c = spacing coefficient (see textabular below)
t = thickness of the web plate, in.
τ = shear stress in plate, psi

nor shall it exceed 72 in., or h, the depth of the web, whichever is greater.

Loading Condition	Spacing Coefficient
Operating	1
Construction	1
Severe Environmental	0.75
Extreme Environmental	0.6

(04) **NUM-III-8233.4 Stiffness of Longitudinal and Transverse Stiffeners.** The required stiffness of the longitudinal stiffener and the stiffness of the transverse stiffeners shall be in accordance with Specification CMAA 70.

(04) **NUM-III-8233.5 Girder Deflection.** The total vertical deflection of the girder during operational loading for the rated live load plus trolley ($P_{dt} + P_{ln}$), and not including impact or dead load of the girder, shall not exceed $^1/_{1000}$ of the span.

The total vertical deflection of the girder during constructional loading for the construction load plus trolley ($P_{dt} + P_{cn}$), and not including impact or dead load of the girder, shall not exceed $^1/_{600}$ of the span.

The total vertical or lateral deflection of the girder during environmental loading shall be limited such that

Copyright ASME International
Provided by IHS under license with ASME
No reproduction or networking permitted without license from IHS
Not for Resale

Table NUM-III-8234.1-1 Allowable Stress Ranges

Allowable Stress Range Fsσ, kips/in.^{2} [Note (1)]						
CMAA Service Class	Joint Category					
	A	B	C	D	E	F
A	43	43	43	43	40	43
B	43	43	43	40	28	43
C	43	43	40	28	20	31
D	43	34	28	20	14	22

GENERAL NOTE: Allowable stress ranges from CMAA 74.
NOTE:
(1) Stress range values are independent of material yield stress.

displacements do not cause the girder or any of its attachments to become dislodged or to leave the crane.

(04) **NUM-III-8233.6 Girder Camber.** Girders shall be cambered an amount equal to the dead load deflection plus one-half of the deflection caused by the live load plus trolley [camber $= \Delta\ (P_{db}) + 0.5\Delta(P_{dt} + P_{ln})$].

NUM-III-8234 Fatigue Requirements. If the owner determines that greater than 20,000 full load cycles are required, the owner shall specify the cycles and load class per NUM-III-8234.1 and 8235.2. The allowable stresses for the appropriate service level shall be used, but shall not exceed the basic operating stress allowables specified in NUM-III-8231.

NUM-III-8234.1 Allowable Stress Range, Repeated Loads. Members and fasteners subject to repeated load shall be designed so that the stress range (maximum stress minus minimum stress) does not exceed allowable values for various categories as listed in Table NUM-III-8234.1-1. The minimum stress is considered as negative if it is opposite in sign to the maximum stress. The categories are described in Table NUM-III-8234.1-2 with joint configuration sketches shown in Fig. NUM-III-8234.1-1. The allowable stress range is to be based on the condition most nearly approximated by the description and sketch.

NUM-III-8235 Hardness. The minimum hardness of the lower load carrying (tension) flange shall be 195 Brinell for patented track systems. For A36 material, the normal hardness produced by normal mill processing shall be sufficient.

NUM-III-8236 Stability. The crane shall be stable under all loading conditions. A factor of safety of 1.5 shall be provided against the combination of loads producing maximum overturning forces.

NUM-III-8240 Components Design

NUM-III-8241 Footwalks, Handrails, Platforms, Stairs, and Ladders

NUM-III-8241.1 General. Platforms and footwalks shall be provided as required for access and maintenance. Dimensions and clearances for footwalks, handrails, platforms, stairs, and ladders shall be in accordance with the latest edition of ASME B30.17.

NUM-III-8241.2 Materials. Materials for construction of footwalks, handrails, platforms, stairs, and ladders shall meet the requirements of NUM-III-8220.

NUM-III-8241.3 Design. Footwalks, handrails, platforms, stairs, and ladders shall be designed for the appropriate dead load and the live loads as specified in ASME B30.17. Structural design shall be in accordance with NUM-III-8230.

NUM-III-8242 Operator's Cab (When Specified)

NUM-III-8242.1 General

(a) The general arrangement of the cab and the location of the control and protective equipment shall be such that all operating control devices are within convenient reach of the operator when facing the area to be served by the load block or when facing the direction of travel of the cab. The operator's cab shall be open type for indoor service unless otherwise specified.

(b) The cab shall be clear of all fixed structures within its area of possible movement. Clearances shall be in accordance with the latest edition of ASME B30.11 and ASME B30.17. The cab shall be so located as not to interfere with the hook approach.

--`,,```,,,,````-`-`,,`,,`,`,,`---

Copyright ASME International
Provided by IHS under license with ASME
No reproduction or networking permitted without license from IHS
Not for Resale

Table NUM-III-8234.1-2 Fatigue Stress Provisions — Tension (T) or Reversal (REV) Stresses

General Condition	Situation	Joint Category	Example of a Situation	Kind of Stress
Plain material	Base metal with rolled or cleaned surfaces. Oxygen-cut edges with ANSI smoothness of 1000 or less.	A	1, 2	T or Rev
Built-up members	Base metal and weld metal in members without attachments, built up; of plates or shapes connected by continuous complete or partial joint penetration groove welds or by continuous fillet welds parallel to the direction of applied stress.	B	3, 4, 5, 7	T or Rev
	Calculated flexural stress at toe of transverse stiffener welds on girder webs or flanges.	C	6	T or Rev
	Base metal at end of partial length welded cover plates having square or tapered ends, with or without welds across the ends.	E	7	T or Rev
Groove welds	Base metal and weld metal at complete joint penetration groove welded splices of rolled and welded sections having similar profiles when welds are ground and weld soundness established by UT or RT examination.	B	8, 9	T or Rev
	Base metal and weld metal in or adjacent to complete joint penetration groove welded splices at transitions in width or thickness, with welds ground to provide slopes no steeper than 1 to $2\frac{1}{2}$ and weld soundness established by UT or RT examination.	B	10, 11	T or Rev
	Weld metal of partial penetration transverse groove welds based on effective throat area of the weld or welds.	F	17	T or Rev
Groove welds	Base metal and weld metal in or adjacent to complete joint penetration groove welded splices either not requiring transition or when required with transitions having slopes no greater than 1 to $2\frac{1}{2}$ and when in either case reinforcement is not removed and weld soundness is established by UT or RT examination.	C	8, 9, 10, 11	T or Rev

(continued)

Copyright ASME International
Provided by IHS under license with ASME
No reproduction or networking permitted without license from IHS Not for Resale

Table NUM-III-8234.1-2 Fatigue Stress Provisions (T) or Reversal (REV) Stresses (Cont'd)

General Condition	Situation	Joint Category	Example of a Situation	Kind of Stress
	Base metal and weld metal at complete joint penetration groove welded splices of sections having similar profiles or at transitions in thickness to provide slopes no steeper than 1 to $2\frac{1}{2}$ with permanent backing bar parallel to the direction of stress when welds are ground and weld soundness established by UT or RT examination. Backing bar is to be continuous, and, if spliced, is to be joined by a full-penetration butt weld. Backing bar is to be connected to parent metal by continuous welds along both edges, except intermittent welds may be used in regions of compression stress.	B	19, 20	
Groove-welded connections	Base metal at details of any length attached by groove welds subjected to transverse or longitudinal loading, or both, when weld soundness transverse to the direction of stress is established by UT or RT examination, and the detail embodies a transition radius, R, with the weld termination ground when:			
	(a) for longitudinal loading,			
	$R \geq 24$ in.	B	13	
	24 in. $> R \geq 6$ in.	C	13	
	6 in. $> R \geq 2$ in.	D	13	
	2 in. $> R \geq 0$	E	12, 13	
	(b) for transverse loading, materials having equal or unequal thickness sloped, welds ground web connections excluded,			
	$R \geq 24$ in.	B	13	T or Rev
	24 in. $> R \geq 6$ in.	C	13	T or Rev
	6 in. $> R \geq 2$ in.	D	13	T or Rev
	2 in. $> R \geq 0$	E	12, 13	T or Rev
	(c) for transverse loading, materials having equal thickness, no ground, web connections excluded,			

(continued)

Copyright ASME International
Provided by IHS under license with ASME
No reproduction or networking permitted without license from IHS Not for Resale

Table NUM-III-8234.1-2 Fatigue Stress Provisions — Tension (T) or Reversal (REV) Stresses (Cont'd)

General Condition	Situation	Joint Category	Example of a Situation	Kind of Stress
	$R \geq 24$ in.	C	13	T or Rev
	24 in. $> R \geq 6$ in.	C	13	T or Rev
	6 in. $> R \geq 2$ in.	D	13	T or Rev
	2 in. $> R \geq 0$	E	12, 13	T or Rev
	(d) for transverse loading, materials having unequal thickness, not sloped or ground, including web connections,			
	$R \geq 24$ in.	E	13	T or Rev
	24 in. $> R \geq 6$ in.	E	13	T or Rev
	6 in. $> R \geq 2$ in.	E	13	T or Rev
	2 in. $> R \geq 0$	E	12, 13	T or Rev
Groove- or fillet-welded connections	Base metal at details attached by groove or fillet welds subject to longitudinal loading where the detail embodies a transition radius, R, less than 2 in., and when the detail length, L, parallel to the line of stress is:			
	$L \leq 2$ in.	C	12, 14, 15, 16, 18	T or Rev
	2 in. $< L \leq 4$ in.	D	12, 18	T or Rev
	$L > 4$ in.	E	12, 18	T or Rev
Fillet-welded connections	Base metal at details attached by fillet welds or partial penetration groove welds parallel to the direction of stress, regardless of length, when the detail embodies a transition radius, R, 2 in. or greater and with the weld termination ground. When:			
	$R \geq 24$ in.	B	13	T or Rev
	24 in. $> R >$ 6 in.	C	13	T or Rev
	6 in. $\geq R >$ 2 in.	D	13	T or Rev
	Base metal at junction of axially loaded members with fillet-welded end connections. Welds shall be disposed about the axis of the member so as to balance weld stresses.	E	21, 22, 23	T or Rev

(continued)

Copyright ASME International
Provided by IHS under license with ASME
No reproduction or networking permitted without license from IHS Not for Resale

Table NUM-III-8234.1-2 Fatigue Stress Provisions — Tension (T) or Reversal (REV) Stresses (Cont'd)

General Condition	Situation	Joint Category	Example of a Situation	Kind of Stress
Fillet welds	Shear stress on throat of fillet welds.	F	21, 22, 23 24, 25, 26 27, 28	S
	Base metal at intermittent welds attaching transverse stiffeners and stud-type shear connectors.	C	7, 14	T or Rev
	Base metal at intermittent welds attaching longitudinal stiffeners or cover plates.	E	7, 29	T or Rev
Stud welds	Shear stress on nominal shear area of stud-type shear connectors.	F	14	S
Plug and slot welds	Base metal adjacent to or connected by plug or slot welds.	E	30	T or Rev
	Shear stress on nominal shear area of plug or slot welds.	F	30, 31	S
Mechanically fastened connections	Base metal at gross section of high strength bolted friction-type connections, except connections subject to stress reversal and axially loaded joints that induce out-of-plane bending in connected material.	B	32	T or Rev
	Base metal at net section of other mechanically fastened joints.	D	33	T or Rev
	Base metal at net section of high-strength bolted bearing connections.	B	32, 33	T or Rev

(c) The arrangement of equipment in the cab should be approved by the owner.

(d) Cabs shall be designed for maximum operator visibility. The arrangement of the cab should allow the operator a full view of the load block in all positions. A visibility diagram shall be furnished to the owner for approval when requested.

(e) The operator's cab shall have a clear height, with equipment installed of not less than 7 ft, except where dimensional interferences or other design considerations require the use of a smaller cab. Cab heights of less than 7 ft must be approved by the owner, and in no case shall be less than 5 ft.

Provision shall be made in the operator's cab for placement of the necessary equipment, wiring, and fittings. All cabs should be provided with a swiveled seat unless otherwise specified.

(f) There shall be means of egress from cab-operated cranes to permit departure under emergency conditions, at any cab location.

NUM-III-8242.2 Materials. Materials for construction of the operator's cab shall meet the requirements of NUM-III-8220.

NUM-III-8242.3 Design. Operator's cab shall be designed for dead and live loads as specified by the owner. Structural design shall be in accordance with NUM-III-8230.

NUM-III-8242.4 Construction

NUM-III-8242.4.1 General. Cabs shall be constructed in accordance with ASME B30.11 or ASME B30.17.

NUM-III-8242.4.2 Enclosed Cabs. Enclosed cabs shall have watertight plate roofs that slope to the rear, and shall be provided with sliding, hinged, or

Copyright ASME International
Provided by IHS under license with ASME
No reproduction or networking permitted without license from IHS
Not for Resale

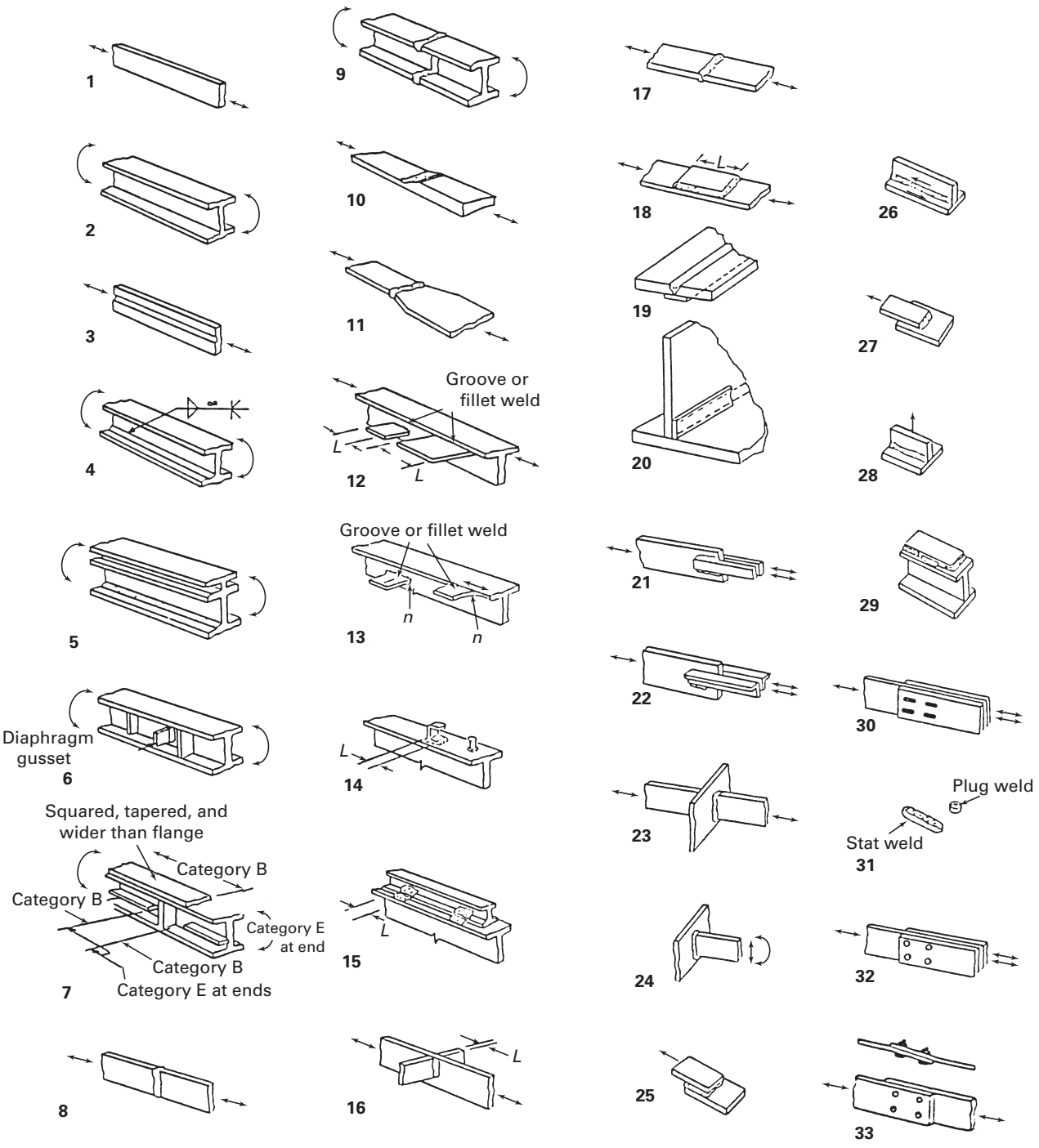

Fig. NUM-III-8234.1-1 Joint Configuration (From CMAA 74)

Copyright ASME International
Provided by IHS under license with ASME
No reproduction or networking permitted without license from IHS
Not for Resale

drop windows on the three sides, and with sliding or hinged doors. Steel plates for enclosing sides, when used, shall not be less than $\frac{1}{8}$-in. thick. Window sash shall be equipped with clear, shatterproof glass installed from the inside so that if it is dislodged it will fall in the cab.

Drop windows shall be protected from breakage by a $\frac{1}{8}$-in. sheet steel guard, extending to within 2 in. of the floor, and shall be provided with handles and stops, which will prevent catching the operator's hands or toes when operating the windows. Drop windows shall be counter-weighted.

NUM-III-8242.4.3 Open Cabs. Open cabs shall be enclosed with panels not less than $\frac{1}{8}$-in. thick or standard railing 42 in. high. Railing enclosures shall be provided with midrail and steel toe plate. Where the top rail, or top panel, interferes with the operator's vision, it may be lowered, with the owner's approval.

NUM-III-8300 MECHANICAL

NUM-III-8310 General

This section covers the mechanical requirements and criteria common to all cranes. Requirements for hoists are covered under NUM-III-7000.

NUM-III-8311 Lubrication Subject to Radiation. If the crane is subjected to radiation, the lubricants shall resist the effects of gamma or neutron radiation or provisions shall be made for changing the lubricants. If lubricants cannot be conveniently replaced, then lubricants shall be National Lubrication and Grease Institute (NLGI) Grade 0 oil containing molybdenum disulfate or NLGI Grade 1.5 grease with sodium aluminate thickener. Lubricants shall be oxidation and rust inhibited with the exception of wire rope lubricants.

NUM-III-8320 Design and Performance Criteria

NUM-III-8321 Allowable Stresses. Load-carrying parts, except structural members and gears, shall be designed such that the calculated static stress in the material, based on rated load, shall not exceed 20% of the published average ultimate strength of the material. Castings, forgings, stampings, and fasteners shall be designed with allowable stress not to exceed 20% of the minimum ultimate strength of the material.

NUM-III-8322 Service Factors. All load combinations and factors including stress concentrations shall have service factors as stated for the design of specific mechanical components, as indicated in NUM-III-8340.

NUM-III-8330 Component Design

NUM-III-8331 Bridge Drives

NUM-III-8331.1 Types of Bridge Drives. Reference specific bridge sections for acceptable bridge drive arrangements.

NUM-III-8331.2 Bridge Drive Motors. Bridge drive motors shall be selected in accordance with NUM-III-8400.

NUM-III-8332 Bridge Brakes

NUM-III-8332.1 Design. On all powered cranes, a braking means shall be provided.

(a) A bridge brake or noncoasting mechanical drive shall be provided capable of stopping the motion of the bridge within a distance in feet equal to 10% of full load speed in feet per minute when traveling at full speed with full load.

(b) The braking means shall have thermal capacity for the frequency of operation.

(c) Brakes shall be provided with adjustment to compensate for wear.

(d) If holding brakes are provided, they shall have a torque rating of at least 50% of the rated motor torque and be adjustable to a minimum of 25% of the rated motor torque.

NUM-III-8333 Bumpers and Stops

NUM-III-8333.1 Bumper Design

(a) Bridge bumpers should be provided.

(b) If bridge bumpers are specified by the owner, then they shall be designed and installed to minimize parts falling from the crane in case of breakage.

(c) For two cranes on the same runway, bumpers shall be designed and installed so that no other part of either crane will come in contact when the two cranes come together.

(d) Bumpers shall have the energy-absorbing (or energy-dissipating) capacity to stop the crane when traveling with power off in either direction at a speed of at least 40% of the rated load speed. The bumpers shall also be capable of stopping the crane (not including load block and lifted load) at a rate of deceleration not to exceed an average of 3 ft per sec when traveling with power off in either direction at 20% of rated load speed.

Copyright ASME International
Provided by IHS under license with ASME
No reproduction or networking permitted without license from IHS
Not for Resale

NUM-III-8333.2 Stop Design

(a) Runway stops shall be provided and shall be located at the limits of the bridge travel, such that no part of the crane (with bumper fully compressed) will encroach upon the required clearance specified in NUM-G-3500.

(b) Runway stops shall be attached to withstand the force applied when contacted.

(c) Runway stops engaging the tread of the wheel shall not be used for motorized cranes.

NUM-III-8334 Couplings. Couplings shall be selected for the torque and alignment requirements at the point of application. Solid couplings shall be steel or minimum ASTM A 48, Class 40 cast iron or equal material.

NUM-III-8335 Mounting of Bridge Drive Components

(a) Drive components, such as motors and gear reducers, shall not be mounted on multiple support structures, which can deflect relative to each other, unless the design specifically allows for this deformation.

(b) Drive components whose alignment is important to their operation shall not depend on friction, but shall utilize positive means, such as dowel pins, shear bars, or fitted bolts, to maintain alignment.

(c) Mechanical component connections shall be designed to accommodate all dynamic forces, such as those induced by motor starting and braking applications.

NUM-III-8336 Guards

(a) Exposed moving parts, such as gears, setscrews, projecting keys, chains, chain sprockets, and reciprocating components, which may constitute a hazard under normal operating conditions, shall be guarded.

(b) Guards shall be securely fastened.

(c) Each guard shall be capable of supporting, without permanent deformation, a weight of 200 lb, unless the guard is located where it is not probable for a person to step on it.

NUM-III-8340 General Mechanical Components

NUM-III-8341 Gearing. Gearing shall be designed and manufactured in accordance with the procedures presented by the American Gear Manufacturers Association (AGMA).

When worm gearing is specified, it shall be rated with appropriate service factors. Consideration shall be given to lock up when selecting gear ratios for travel drives.

NUM-III-8341.1 Materials. All gears and pinions shall be constructed of steel or other material of adequate strength and durability to meet the requirements for the intended class of service, and manufactured to AGMA quality class 5 or better.

NUM-III-8341.2 Allowable Strength Horsepower

(a) The horsepower rating for all spur and helical gearing shall be based on AGMA 2001. For the purpose of this Standard, the power formula is as follows: **(04)**

$$P_{at} = \frac{N_p\, d\, K_v}{126{,}000} \times \frac{F\, S_{at}\, J}{K_m\, P_d\, S_f} \tag{50}$$

$$P_{ac} = \frac{N_p\, F\, I\, C_v}{126{,}000\, C_m\, S_{fd}} \times \left(\frac{S_{ac}\, d\, C_h}{C_p}\right)^2 \tag{51}$$

where

F = net face width of the narrowest of the mating gears
I = geometry factor (durability)
J = geometry factor (strength)
d = pitch diameter of pinion, in.
C_h = hardness factor (durability)
C_m = load distribution factor (durability)
C_p = elastic coefficient
C_v = dynamic factor (durability)
K_m = load distribution factor (strength)
K_v = dynamic factor (strength)
N_p = pinion speed, rpm
P_d = diametral pitch
S_f = crane service factor (strength)
P_{at} = allowable strength, horsepower
P_{ac} = allowable durability, horsepower
S_{at} = allowable bending stress for material, psi (strength)
S_{fd} = crane service factor (durability)

The values for K_v, C_v, K_m, C_m, C_p, J, I, S_{ac}, and S_{at} can be determined from the tables and curves in the appropriate AGMA specification previously mentioned, S_f in Table NUM-III-8341.2-2 and the remaining values will be physical characteristics pertaining to the gears for their operation characteristics.

Crane service factor S_{fd} shall be determined from the formula $S_{fd} = C_d$ x K_w. For values of specific K_w, refer to the formula listed below, and for C_d, which is the machinery factor, refer to Table NUM-III-8341.2-1.

Copyright ASME International
Provided by IHS under license with ASME
No reproduction or networking permitted without license from IHS
Not for Resale

Table NUM-III-8341.2-1
Machinery Service Factor, C_d

Class of Service	C_d
A	0.64
B	0.72
C	0.80
D	0.90

GENERAL NOTE: Machinery service factor, C_d, from CMAA 74.

Table NUM-III-8341.2-2
Crane Service Factor, S_f

Crane Class	S_f
A	0.75
B	0.85
C	0.90
D	0.95

GENERAL NOTE: Crane service factor, S_f, from CMAA 74.

$$K_w = \frac{2(\text{Maximum load}) + (\text{Minimum load})}{3(\text{Maximum load})} \quad (52)$$

(04) **NUM-III-8341.3 Lubrication.** Means shall be provided to insure adequate and proper lubrication on all gearing. All gearing, except the final reduction at the wheels, shall run in oil or be splash lubricated. Selection of lubricants shall be based on the guidelines found in AGMA 9005 or as a recommended by the gear manufacturer.

NUM-III-8342 Anti-Friction Bearings

(a) Anti-friction bearings shall be selected to give a minimum life expectancy based on full rated speed as shown in Table NUM-III-8342-1.

The crane service factors for strength in horsepower are shown in Table NUM-III-8341.2-2.

(b) Use K_w load factor for all applications.

(c) Due consideration shall be given to the selection of the bearing in the event a crane is used for a limited time at an increased service class, such as "during a construction phase."

NUM-III-8342.1 Sleeve Bearings. Bronze sleeve bearings shall have a maximum allowable unit bearing pressure of 1,000 psi on the projected area.

Table NUM-III-8342-1
AFBMA L-10 Bearing Life

Class	Bearing Life, hr
A	1,250
B	2,500
C	5,000
D	10,000

GENERAL NOTE: AFBMA L-10 bearing life from CMAA 74.

NUM-III-8342.2 Lubrication. All bearings shall be provided with proper lubrication or means of lubrication. Bearing enclosures will be designed to exclude dirt and prevent leakage of oil or grease.

NUM-III-8343 Bridge and Trolley Drive Shafts

NUM-III-8343.1 General. Drive shafting shall be designed for the maximum wheel load in combination with the maximum torque load.

NUM-III-8343.2 Material. All shafts, except the bridge cross shaft sections, that do not carry gears, shall be of cold-rolled shafting quality or equivalent.

NUM-III-8343.3 Bearing Spacing for Rotating Shafts. The bearing spacing for rotating shafts less than 400 rpm shall not exceed that calculated per the following equation:

$$L = \sqrt[3]{432{,}000\ D^2} \quad (53)$$

where

D = shaft diameter, in.
L = distance between bearing centers, in.

When the shaft speed exceeds 400 rpm, the bearing spacing shall not exceed that determined by the following formula, or the preceding formula, whichever is less in order to avoid objectionable vibration at critical shaft speeds.

$$L = \sqrt{\frac{4{,}760{,}000\ D}{1.2N}} \quad (54)$$

where

L = distance between bearing centers, inches
D = shaft diameter, inches
N = maximum shaft speed, rpm

NUM-III-8343.4 Torsional Deflection of the Bridge. The torsional deflection of the bridge cross shaft shall not exceed 0.10 degrees per foot when 67%

Copyright ASME International
Provided by IHS under license with ASME
No reproduction or networking permitted without license from IHS
Not for Resale

(A1 Drive), 50% (A2 Drive), 100% (A4 Drive) full load bridge drive rated motor torque, increased by any gear reduction between the motor and the shaft, is applied. In addition, this applied torque shall result in a bridge drive wheel movement no greater than 1% of the wheel circumference or $\frac{1}{2}$ in., whichever is less.

NUM-III-8343.5 Stress Calculations. All shafting shall be designed to meet the stresses encountered in actual operation, including the effects of brake torque. When significant stresses are produced by other forces, these forces shall be positioned to provide the maximum stresses at the section under consideration. Impact shall not be included.

(a) Static Stress Check for Operating Conditions

(1) For shafting subjected to axial loads, the stress shall be calculated as follows (for shafting not limited by buckling):

$$\sigma = \frac{P}{A} \tag{55}$$

where

A = cross-sectional area of shaft, square in.
P = total axial load, lb

This axial stress shall not exceed

$$\frac{S_u}{5} \tag{56}$$

(2) For shafting loaded in bending, the stress shall be calculated as follows:

$$\sigma = \frac{Mr}{I} \tag{57}$$

where

I = bending moment of inertia at point of examination
M = bending moment at point of examination, in.-lbs
r = outside radius of shaft at point of examination, in.

This bending stress shall not exceed

$$\frac{S_u}{5} \tag{58}$$

(3) For shafting loaded in torque, the shear stress shall be calculated as follows:

$$\tau = \frac{T_r}{J} \tag{59}$$

where

J = polar moment of inertia of shaft at point of examination
T = torque at point of examination, in.-lb
r = outside radius of shaft at point of examination, in.

This shear stress shall not exceed

$$\frac{S_u}{5\sqrt{3}} \tag{60}$$

(4) Transverse shear stress in shafting shall be calculated as follows:

For solid shaft

$$\tau = \frac{1.33V}{A} \tag{61}$$

where

V = shear load at point of examination, pounds

For hollow shafts

$$\tau = \frac{2V}{A} \tag{62}$$

where

A = cross-sectional area at point of examination, square in.

These shear stresses shall not exceed

$$\frac{S_u}{5\sqrt{3}} \tag{63}$$

(5) When combinations of stresses are present on the same element, they shall be combined as follows:

For axial and bending stresses

$$\sigma = \sigma_1 + \sigma_2 + \sigma_3 \ldots + \sigma_n$$

and shall not exceed

$$\frac{S_u}{5} \tag{64}$$

For shear stresses

Copyright ASME International
Provided by IHS under license with ASME
No reproduction or networking permitted without license from IHS
Not for Resale

$$\tau = \tau_1 + \tau_2 + \tau_3 \ldots + \tau_n$$

and shall not exceed

$$\frac{S_u}{5\sqrt{3}} \tag{65}$$

For axial and bending with shear

$$\sigma_t = \sqrt{\sigma^2 + 3\tau^2} \tag{66}$$

and shall not exceed

$$\frac{S_u}{5} \tag{67}$$

Note that bending and torsional stresses are maximum on the outer fibers of the shaft and must be combined. The transverse shear stresses are maximum at the center of the shaft and do not combine with bending or torsional stresses.

(b) Fatigue Stress Check for Fluctuating, Operating Stresses. Any shafting subjected to fluctuating stresses, such as the bending in rotating shafts or the torsion in reversing drives, must be checked for fatigue. This check needs to be performed at points of geometric discontinuity where stress concentrations exist, such as fillets, holes, keys, press fits, etc. Pure stresses are to be calculated using appropriate stress multiplication factors. The allowable stresses are as follows:

(1) Tensile and bending stress

$$\sigma \times K_t \le \frac{S_e}{K_c} \tag{68}$$

(2) Shear and combined shear

$$\tau \times K_s \le \frac{S_e}{K_c\sqrt{3}} \tag{69}$$

(3) For combined stresses, where all of the shear and bending is fluctuating

$$\sigma_t = \sqrt{(K_t\ \sigma)^2 + 3(K_s\ \tau)^2} \quad \le \frac{S_e}{K_c} \tag{70}$$

(4) For combined shear and bending, where only part of the stresses are fluctuating

Table NUM-III-8343.5-1
Crane Class Factor, K_c

Crane Class	K_c
A	1.00
B	1.015
C	1.03
D	1.06

GENERAL NOTE: Crane class factor, K_c, from CMAA 74.

Table NUM-III-8343.5-2
Surface Condition Factor, K_{sc}

K_{sc}	Shafting Type
1.40	For polished, heat-treated, and inspected shafting
1.00	For machined, heat-treated, and inspected shafting
0.75	For machined, general usage shafting

GENERAL NOTE: Surface condition factor, K_{sc}, from CMAA 74.

$$\sigma_t = \sqrt{\left(\sigma_{av} + \frac{K_t\ S_{yp}\ \sigma_r}{S_e}\right)^2 + 3\left(\tau_{av} + \frac{K_s\ S_{yp}\ \tau_r}{S_e}\right)^2}$$

$$\le \frac{S_{yp}}{K_c} \tag{71}$$

where

K_c = crane class factor (see Table NUM-III-8343.5-1)
K_s = stress amplification factor for shear
K_t = stress amplification factor for tension or bending
S_e = endurance strength of shaft material = 0.36 $S_{u'}K_{sc}$
S_u = average tensile strength of shaft material
S_u' = minimum tensile strength of shaft material
s_r = that part of the bending stress due to fluctuating loads
t_r = that part of the shear stress due to fluctuating loads
K_{sc} = surface condition factor (see Table NUM-III-8343.5-2)
S_{yp} = minimum yield strength of shaft material
s_{av} = that part of the bending stress not due to fluctuating loads

Copyright ASME International
Provided by IHS under license with ASME
No reproduction or networking permitted without license from IHS
Not for Resale

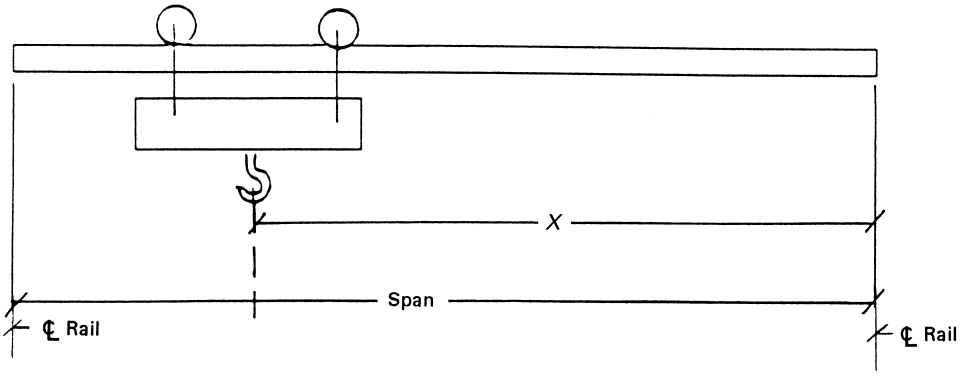

Fig. NUM-III-8344.1-1 Bridge Span (From CMAA 74)

t_{av} = that part of the shear stress not due to fluctuating loads

(c) Bearing Stress in Shafts. Shafting in bearing must be checked for operating conditions. The bearing stress is calculated by dividing the radial load by the projected area.

$$\frac{P}{d \times L} \tag{72}$$

where

L = the length in bearing
d = the shaft diameter

This bearing stress must not exceed 50% of the minimum yield for nonrotating shafting.

This bearing stress must not exceed 20% of the minimum yield for oscillating shafting when not limited by the bushing material.

NUM-III-8344 Wheel Assembly

NUM-III-8344.1 Top-Running Bridge Wheel Design

(a) Unless other means of restricting lateral movement are provided (such as side rollers), wheels shall be double flanged with treads accurately machined. Bridge wheels may have either straight treads or tapered treads assembled with the large diameter towards the center of the span. Drive wheels shall be machined in pairs within 0.001 inches per inch of diameter with a maximum of 0.010 in. on the diameter, whichever case is smaller.

(b) Sizing of Wheels and Rails. Wheels shall be designed to carry the maximum wheel load under normal conditions without undue wear. The maximumwheel load is that wheel load produced with trolley handling the rated load in the position to produce the maximum reaction at the wheel, not including impact. When sizing wheels and rails, the following parameters shall be considered:

D = wheel diameter, in.
K = hardness coefficient of the wheel; K = BHN × 5 (for wheels with BHN<260); $K = 1300(\text{BHN}/260)^{0.33}$ (for wheels with BHN>260)
W = effective rail head width, in.

The bridge and trolley durability wheel loading for different wheel hardnesses and sizes in combination with different rail sizes are shown in Table NUM-III-8344.1-1. The values in the table are established by the product of D x W x K.

(c) To use Table NUM-III-8344.1-4, first determine the equivalent durability wheel load P_e.

P_e = maximum wheel load × K_{wl}
$K_{wl} = K_{bw} \times C_s \times S_m$

(d) Load factor K_{bw} can be determined as follows:

$$K_{bw} = \frac{0.75(BW) + f\,(LL) + 0.5(TW) - 0.5f\,(TW)}{0.75(BW) + 1.5f\,(LL)} \tag{73}$$

where

f = X⁄span (see Fig. NUM-III-8344.1-2)
BW = bridge weight
LL = trolley weight + rated load
TW = trolley weight

(e) The speed factor, C_s, depends on the rotational speed of the wheel and is listed in Table NUM-III-8344.1-3. These factors are obtained from the following formulas:

for rpm ≤ 31.5
for rpm ≥ 31.5

Copyright ASME International
Provided by IHS under license with ASME
No reproduction or networking permitted without license from IHS
Not for Resale

Table NUM-III-8344.1-1 Bridge Load Factor, K_{bw}

Bridge Span, ft	Capacity, tons							
	3	5	7.5	10	15	20	25	30
20	0.812	0.782	0.762	0.747	0.732	0.722	0.716	0.716
30	0.817	0.785	0.767	0.750	0.736	0.725	0.718	0.718
40	0.827	0.794	0.777	0.760	0.744	0.732	0.723	0.723
50	0.842	0.809	0.791	0.771	0.758	0.740	0.738	0.731
60	0.861	0.830	0.807	0.790	0.773	0.754	0.747	0.741
70	0.877	0.844	0.825	0.807	0.789	0.768	0.760	0.752
80	0.888	0.857	0.835	0.818	0.802	0.779	0.770	0.761

GENERAL NOTES:
(a) K based on worst case with trolley against stop.
(b) Bridge load factor, K_{bw}, from CMAA 74.

Table NUM-III-8344.1-2 Speed Factor, C_s

Wheel Diameter, in.	Speed, ft per min								
	30	50	75	100	125	150	175	200	250
5	0.952	1.020	1.078	1.136	1.194	1.252	1.310	1.368	1.485
6	0.932	1.001	1.049	1.098	1.146	1.194	1.243	1.291	1.388
8	0.907	0.958	1.013	1.049	1.086	1.122	1.158	1.195	1.267
9	0.898	0.944	1.001	1.033	1.066	1.098	1.130	1.163	1.227
10	0.892	0.932	0.984	1.020	1.049	1.079	1.108	1.137	1.195
12	0.882	0.915	0.958	1.001	1.025	1.049	1.074	1.098	1.146
15	0.872	0.898	0.932	0.967	1.001	1.020	1.040	1.059	1.098
18	0.865	0.887	0.915	0.944	0.973	1.001	1.017	1.033	1.066

GENERAL NOTE: Speed factor, C_s, from CMAA 74.

$$C_s = 1 + \left(\frac{\text{rpm} - 31.5}{328.5}\right) \quad (74)$$

Table NUM-III-8344.1-3
Wheel Service Factor, S_m, and Minimum Load Service Factor, K_{wl}

Class of Crane Service	K_{wl}, min.	S_m
A	0.75	0.80
B	0.75	0.90
C	0.80	1.00
D	0.85	1.12

GENERAL NOTE: Wheel service factor, S_m, and minimum load service factor, K_{wl}, from CMAA 74.

(f) The wheel service factor, S_m, is equal to 1.25 times the machinery service factor, C_d, and is shown in Table NUM-III-8344.1-4. This factor recognizes thatthe interaction between rail and wheel is more demanding in terms of durability than well-aligned and lubricated interaction of machined parts.

(g) The wheel load service coefficient

$$K_{wl} = K_{bw} \times C_s \times S_m$$

and K_{wl} may not be smaller than K_{wl} minimum shown in Table NUM-III-8344.1-4.

Copyright ASME International
Provided by IHS under license with ASME
No reproduction or networking permitted without license from IHS
Not for Resale

Copyright ASME International
Provided by IHS under license with ASME
No reproduction or networking permitted without license from IHS

Table NUM-III-8344.1-4 Bridge Wheel Loadings, lb; *P*; *KDW*

Wheel BHN	Wheel Diameter, *D*, in.	ASCE 20 lb	ASCE 25 lb	ASCE 30 lb	ASCE 40 lb	ARA-A 90 lb	ASCE 60 lb and 70 lb ARA-B 100 lb	ASCE 80 lb and 85 lb ARA-A 100 lb F BETH 104 USS 105 lb	ASCE 100lb	BETH and USS 135 lb
200	5	4,200	5,000	5,300	. . .	. . .	. . .	. . .	. . .	. . .
	6	5,050	6,000	6,400	7,500	. . .	. . .	. . .	. . .	. . .
	8	6,750	8,000	8,500	10,000	. . .	. . .	. . .	. . .	. . .
	9	7,600	9,000	9,550	11,250	14,900	15,750	. . .	. . .	. . .
	10	8,450	10,000	10,650	12,500	16,550	17,500	. . .	. . .	. . .
	12	. . .	12,000	12,750	15,000	19,850	21,000	22,500	25,500	. . .
	15	. . .	. . .	15,950	18,750	24,850	26,250	28,150	31,850	. . .
	18	. . .	. . .	19,150	22,500	29,800	31,500	33,750	38,250	40,500
260	5	5,500	6,500	6,900	. . .	. . .	. . .	. . .	. . .	. . .
	6	6,600	7,800	8,300	9,750	. . .	. . .	. . .	. . .	. . .
	8	8,800	10,400	11,050	13,000	. . .	. . .	. . .	. . .	. . .
	9	9,850	11,700	12,450	14,600	19,400	20,450	. . .	. . .	. . .
	10	10,950	13,000	13,800	16,250	21,550	22,750	. . .	. . .	. . .
	12	. . .	15,600	16,600	19,500	25,850	27,300	29,250	33,150	. . .
	15	. . .	. . .	20,750	24,400	32,300	34,100	36,550	41,450	. . .
	18	. . .	. . .	24,850	29,250	38,750	40,950	43,850	48,700	52,650
320	5	5,850	6,950	7,400	. . .	. . .	. . .	. . .	. . .	. . .
	6	7,050	8,350	8,900	10,450	. . .	. . .	. . .	. . .	. . .
	8	9,400	11,150	11,850	13,900	. . .	. . .	. . .	. . .	. . .
	9	10,550	12,550	13,300	15,650	20,750	21,950	. . .	. . .	. . .
	10	11,750	13,900	14,800	17,400	23,050	24,350	. . .	. . .	. . .
	12	. . .	16,700	17,750	20,900	27,650	29,250	31,300	35,500	. . .
	15	. . .	. . .	22,200	26,100	34,600	36,550	39,150	44,400	. . .
	18	. . .	. . .	26,650	31,300	41,500	43,850	47,000	53,250	86,400
58 RC (615 BHN)	5	7,300	8,650	9,200	. . .	. . .	. . .	. . .	. . .	. . .
	6	8,750	10,350	11,000	12,950	. . .	. . .	. . .	. . .	. . .
	8	11,650	13,800	14,700	17,250	. . .	. . .	. . .	. . .	. . .
	9	13,200	15,550	16,500	19,450	25,750	27,200	. . .	. . .	. . .
	10	14,600	17,250	18,350	21,600	28,600	30,200	. . .	. . .	. . .
	12	. . .	20,700	22,050	25,900	34,300	36,250	38,850	44,050	. . .
	15	. . .	. . .	27,550	32,400	42,900	45,350	48,550	55,050	. . .
	18	. . .	. . .	33,050	38,850	51,500	54,400	58,300	66,050	69,950
Effective width of rail head, *W* (top of head minus corner), in.		0.844	1.000	1.083	1.250	1.654	1.750	1.875	2.125	2.250

GENERAL NOTE: Bridge wheel loadings, lb, *P*; *KDW*, from CMAA 74.

Not for Resale

Table NUM-III-8344.2-1 Maximum Wheel Loads/I-Beams and Wide Flange Beams

Wheel Diameter, *D*, in.	Contour Tread, in.[2] [Note (1)]				Convex Tread, in.			
	W = ½	*W* = 1	*W* = 1 ½	*W* = 2	*W* = ½	*W* = 1	*W* = 1 ½	*W* = 2
4	2,000	4,000	6,000	8,000	1,200	2,400	3,600	4,800
5	2,500	5,000	7,500	10,000	1,500	3,000	4,500	6,000
6	3,000	6,000	9,000	12,000	1,800	3,600	5,400	7,200
7	3,500	7,000	10,500	14,000	2,100	4,200	6,300	8,400
8	4,000	8,000	12,000	16,000	2,400	4,800	7,200	9,600
9	4,500	9,000	13,500	18,000	2,700	5,400	8,100	10,800
10	5,000	10,000	15,000	20,000	3,000	6,000	9,000	12,000

GENERAL NOTES:
(a) For contour tread, *P* (wheel load) = 1,000 *WD*, lb.
(b) For convex tread, *P* (wheel load) = 600 *WD*, lb.
(c) *W* = width of wheel tread exclusive of flange, in.; *D* = diameter of wheel, in.
(d) Charted values are based on wheels with Brinell Hardness of 200. Larger wheel loads are obtainable with suitable material and with greater Brinell Hardness.
(e) Maximum wheel loads/I-beams and wide flange beams from CMAA 74.

NOTE:
(1) Where wheel tread matches the rolling surface of the lower flange of the track beam.

(h) The equivalent durability wheel load, P_e, shall not exceed the wheel load in Table NUM-III-8344.1-4.

(i) Proper Clearance for Bridge Wheels. A total of approximately ¾ in. to 1 in. wider than rail head. Tapered tread wheels may have a clearance over the rail head of 150% of the clearance provided for straight tread wheels.

(j) When rotating axles are used, wheels shall be mounted on the axle with press fit alone, press fit and keys, or with keys alone.

NUM-III-8344.2 Under-Running Bridge Wheel Design

(a) All under-running bridge truck wheels shall be designed to suit the surface on which they run. Drive wheels shall be the same diameter within a tolerance of 0.010 inch.

(b) When flangeless wheels are used, they shall be provided with a side roller arrangement.

(c) Wheels shall be designed to carry the maximum wheel load under normal conditions. The wheel load shown on Table NUM-III-8344.2-1 is that load produced with the trolley handling the rated load, in a position to exert the maximum load, not including impact. Note, a reduction in the allowable wheel load may be necessary to satisfy the runway lower flange stress requirements.

NUM-III-8344.3 Material. Wheels shall be cast iron or rolled, forged, or cast steel with a minimum hardness of 200 BHN. For special applications, other materials may be used with permission of the owner and with consideration of hardness, impact strength, and brittleness.

NUM-III-8344.4 Bearings. Wheel bearings shall be single or double row, combination radial and thrust, anti-friction precision type. Bearings shall be prelubricated and sealed or provided with fittings and seals for pressure lubrication.

NUM-III-8344.5 Safety Lugs. All wheel sets shall have drop plates limiting the movement of the immediate structure to one inch in the event of axle or bearing failure.

NUM-III-8350 Miscellaneous

NUM-III-8351 Hand-Chain Wheels

(a) Hand-chain wheels shall have pockets formed to allow proper engagement of the hand chain.

(b) The wheels shall be equipped with a chain guide that will permit operation of the hand chain from an angle ten degrees out from either side of the chain wheel without slipping or jumping the wheel rim.

(c) All hand chains shall be guided to guard against disengagement from the hand-chain wheel.

NUM-III-8352 Hand Chains

(a) Hand chain shall be of the link-chain type. Each link shall be of uniform size and shape and have an accurate pitch to reliably pass over and around the hand-chain wheels.

(b) Hand chains shall be endless link chain and shall

Copyright ASME International
Provided by IHS under license with ASME
No reproduction or networking permitted without license from IHS
Not for Resale

have a drop that is approximately two feet above the operator's floor level.

(c) Hand chains shall withstand, without permanent distortion, a force of three times the pull required to rotate the boom with a capacity load on the boom.

NUM-III-8400 ELECTRICAL

NUM-III-8410 General

This section covers the electrical requirements and criteria common to all cranes. Requirements for hoists are covered under NUM-III-7000.

NUM-III-8420 Electrical Components

NUM-III-8421 Crane Controls. The type of control supplied for a traverse drive shall result in operation complying with the specified performance as defined in NUM-G-3000.

NUM-III-8421.1 Types of Control

(a) Common control systems may be one of the following:

(1) Single-speed AC magnetic reversing, which utilizes an AC squirrel-cage induction motor. (Also see NUM-III-8421.2, Cushioned Start Devices.)

(2) Two-speed AC magnetic reversing, which utilizes a dual-wound AC squirrel-cage induction motor. Speed ratios under any load are normally 3 to 1, but may also be furnished in other ratios, such as 2 to 1, and 4 to 1. (Also see NUM-III-8421.2, Cushioned Start Devices.)

(3) Variable-speed AC magnetic reversing, which is a type of constant potential AC control that utilizes resistance in the secondary of an AC-wound rotor induction motor. Three to five speed steps are normally provided, with the speed at each step varying depending on the load.

(4) AC variable frequency control, which utilizes an AC squirrel-cage induction motor and provides either stepped or stepless speed control by varying the motor frequency. (See NUM-III-8421.6)

(b) Other Control Systems. Other control systems, such as adjustable-voltage DC and adjustable-voltage AC, may be required depending on the specific application or owner specifications.

NUM-III-8421.2 Cushioned Start Devices

(a) Cushioned start devices are utilized with single- and two-speed AC magnetic-reversing controls in order to control the rate of acceleration by limiting the starting voltage of the AC squirrel-cage induction motor.

(b) A cushioned start device should be used on single- and two-speed applications that require load swing to be minimized.

(c) A cushioned start device shall be used for the following applications:

(1) single-speed drives greater than 100 fpm, and

(2) two-speed drives greater than 100 fpm that do not utilize a time delay between the two speeds.

(d) Standard cushioned start devices are as follows:

(1) solid-state reduced-torque starters, which provide for the adjustment of the initial torque upon starting and adjustment of the time for reaching full motor torque; and

(2) ballast resistors, which limit the initial torque upon starting when the resistor is in the unheated condition.

(e) A nonelectrical cushioned start device, such as a fluid coupling, may also be used to minimize load swing.

NUM-III-8421.3 Time Delays

(a) All two-speed AC magnetic controls without cushioned starting should be provided with a time delay between the speed steps.

(b) All variable-speed AC magnetic controls shall be provided with time delays between the speed steps as follows:

(1) For a 3-step control, a time delay shall be provided between the last two speed steps.

(2) For either a 4-step or 5-step control, two time delays shall be provided between the last three speed steps.

NUM-III-8421.4 AC Contactors

(a) Reversing and Speed-Stepping Contactors. The minimum NEMA size of magnetic contactors shall be in accordance with Table NUM-III-8421.4-1 for AC-wound rotor motors, Table NUM-III-8421.4-2 for AC squirrel-cage motors, and Table NUM-III-8421.4-3 for DC motors.

(1) Wound-rotor primary contactors shall be selected to be not less than the current and horsepower ratings. Wound-rotor secondary contactors shall be selected to be not less than the motor full-load secondary current, using contactor intermittent rating. The ampere intermittent rating of a three-pole secondary contactor with poles in delta shall be $1\frac{1}{2}$ times its wound-rotor intermittent rating.

(b) Magnetic Mainline Contactors. Magnetic mainline contactors, when required as stated under NUM-III-8424.1, shall be as shown in Table NUM-III-8421.4-4 for AC contactors and Table NUM-III-8421.4-5 for

Copyright ASME International
Provided by IHS under license with ASME
No reproduction or networking permitted without license from IHS
Not for Resale

Table NUM-III-8421.4-1 AC Contactor Ratings for AC-Wound Rotor Motors

Size of Contactor	8-hr Open Rating, Amperes	Maximum Intermittent Rating		
			Horsepower at:	
		Amperes	250 Volts	460 Volts and 575 Volts
0	20	20	3	5
1	30	30	7½	10
2	50	67	20	40
3	100	133	40	80

GENERAL NOTE: AC contactor ratings for AC-wound rotor motors from CMAA 74.

Table NUM-III-8421.4-2 AC Contactor Ratings for AC Squirrel-Cage Motors (Maximum Intermittent Horsepower Rating)

Size of Contactor	230 Volts	460 Volts and 575 Volts
0	3	5
1	7½	10
2	15	25 [Note (1)]
3	30 [Note (1)]	50 [Note (1)]

GENERAL NOTE: AC contactor ratings for AC squirrel-cage motors from CMAA 74.

NOTE:
(1) Squirrel-cage motors over 20 horsepower are not normally used for crane motions.

Table NUM-III-8421.4-3 DC Contactor Ratings for DC Motors (230 to 250 Volts DC)

Size of Contactor	8-Hr Open Rating, Amperes	Maximum Intermittent Rating	
		Amperes	Horsepower
1	25	30	7½
2	50	67	15
3	100	133	35

GENERAL NOTE: DC contactor ratings for DC motors from CMAA 74.

DC contactors. The size shall not be less than the rating of the largest primary contactor used on any one motion.

(c) Unless noted otherwise by the owner, definite purpose contactors, in lieu of NEMA-rated contactors, specifically rated for crane and hoist duty service may be used for service classes A, B, and C provided the application does not exceed the contactor manufacturer's published ratings.

NUM-III-8421.5 Resistors

(a) Variable-speed AC magnetic controls that require use of resistors in the secondary circuit of the wound rotor motor shall be as follows:

(1) not less than NEMA Class 150 Series for service classes A, B, and C; and

(2) not less than NEMA Class 160 Series for service classes D, E, and F.

(b) Additional considerations for increasing the resistor class are operating conditions such as sustained slow-speed operation.

(c) Secondary resistors are rated and classified according to the amount of time they can be in use, and the percent of full load current in the secondary circuit when on the first point of the variable speed control. Table NUM-III-8421.5-1 shows the standard NEMA crane service resistor classifications based on current, torque, and duty cycle.

(d) All resistors shall be guarded to prevent inadvertent contact.

(e) All resistor enclosures shall be ventilated or sized to dissipate heat.

NUM-III-8421.6 AC Variable Frequency Drives. The general requirements are as follows:

(a) Control shall consist of a variable frequency drive (VFD) with a full load ampere (FLA) rating equal to, or greater than, the FLAs of the corresponding motor(s).

(b) Control shall include, as a minimum, the following protective features:

(1) output phase loss

Copyright ASME International
Provided by IHS under license with ASME
No reproduction or networking permitted without license from IHS
Not for Resale

Table NUM-III-8421.4-4
AC Contactor Ratings for Mainline Service

Size of Contactor	8-Hr Open Rating, Amperes	Maximum Intermittent Duty Rating, Amperes	Maximum Total Motor Horsepower		Maximum Horsepower for Any Motion	
			230V	460V and 575V	230V	460V and 575V
0	20	20	6	6	3	5
1	30	30	10	20	7½	10
2	50	67	30	60	20	40
3	100	133	63	125	40	80

GENERAL NOTE: AC contactor ratings for mainline service from CMAA 74.

Table NUM-III-8421.4-5 DC Contactor Ratings for Mainline Service (230 to 250 Volts DC)

Size of Contactor	8-Hr Open Rating, Amperes	Maximum Intermittent Duty Rating, Amperes	Maximum Total Motor Horsepower	Maximum Horsepower for Any Motion
1	25	30	10	7½
2	50	67	22	15
3	100	133	55	35

GENERAL NOTE: DC contactor ratings for mainline service from CMAA 74.

Table NUM-III-8421.5-1 NEMA Resistor Classification

Approx. Percentage of Full Load Current on First Point	Starting Torque in Percentage of Full Load Torque		Class Number According to Duty Cycle			
	1 Phase Starting	3 Phase Starting	15 Sec out of 60 Sec	15 Sec out of 45 Sec	15 Sec out of 30 Sec	Continuous Duty
25	15	25	151	161	171	91
50	30	50	152	162	172	92
70	40	70	153	163	173	93
100	55	100	154	164	174	94

(2) under voltage
(3) over voltage
(4) motor thermal overload
(5) VFD Overheat

(c) Control shall provide a control braking means using dynamic braking or line regeneration.

(d) Control shall have a minimum of 150% overload capability for 1 min.

(e) The crane/jib power supply and electronic equipment shall be protected from detrimental effects due to harmonic and EMI/RFI emissions produced by inverters.

NUM-III-8422 Motors

NUM-III-8422.1 General

(a) Direct Current Motors. DC motors shall be in accordance with either NEMA MG-1 or AISE Std. No. 1.

(b) Alternating Current Motors

(1) Definite Purpose Inverter-Fed Motors. AC squirrel-cage motors applied to variable frequency drives (VFDs) shall be specifically designed for inverter duty and shall conform to NEMA MG-1, Part 31, or other standard as approved by the owner.

Copyright ASME International
Provided by IHS under license with ASME
No reproduction or networking permitted without license from IHS
Not for Resale

Table NUM-III-8422.2-1 Standard Rated Motor Voltages

	Voltages		
Power Supply	Nominal System	Rated Motor Voltages	Permissible Motor Operating Range
AC, single phase 60 Hz	120	115	104 to 126
	240	230	207 to 253
AC, polyphase 60 Hz	208	200	180 to 220
	240	230	207 to 253
	480	460	414 to 506
	600	575	518 to 632
AC, polyphase 50 Hz	208	200	180 to 220
	230	220	198 to 242
	400	380	342 to 418
DC	125	115	104 to 126
	125	120	108 to 132
	250	230	207 to 253
	250	240	216 to 264

(2) Definite Purpose Wound Rotor Induction Motors. AC-wound rotor motors shall conform to NEMA MG-1, Part 18.501 through 18.520.

(3) Other AC Motors. All other AC motors not already described shall conform to NEMA MG-1.

(c) All AC or DC motors shall have enclosures and time ratings as required for the duty and environmental conditions.

NUM-III-8422.2 Motor Voltage

(a) Rated Voltage

(1) Standard rated motor voltage and the corresponding nominal system voltage shall be in accordance with Table NUM-III-8422.2-1.

(2) For nominal system voltage other than shown in Table NUM-III-8422.2-1, the rated motor voltage should not be less than 95% nor more than 100% of the nominal system voltage.

(b) Variation From Rated Voltage

(1) All AC induction motors with rated frequency and balanced voltage applied shall be capable of accelerating and running with rated hook load at plus or minus 10% of rated motor voltage, but not necessarily at rated voltage performance values.

(2) Operation at reduced voltage may result in unsatisfactory drive performance with rated hook load, such as reduced speed, slower acceleration, increased motor current, noise, and heating.

(3) Operation at elevated voltages may result in unsatisfactory operation, such as excessive torques.

(c) Voltage Unbalance. AC polyphase motors shall be capable of accelerating and running with rated hook load when the voltage unbalance at the motor terminals does not exceed 1%. Performance will not necessarily be the same as when the motor is operating with a balanced voltage at the motor terminals.

NUM-III-8422.3 Motor Time Ratings. The motor time rating shall result in operation complying with the specified performance as defined in NUM-G-3000, taking into consideration any supplemental requirements specified by the owner.

(a) Minimum Time Ratings. Single-speed, two-speed, and variable-speed motors shall be rated on no less than a 30-minute basis under rated load, with the temperature rise in accordance with the class of insulation and enclosure used. The low-speed winding of a two-speed motor may be rated less than 30 min, and the lower stepping speeds of a variable-speed control will have a substantially lower operating time.

(b) Under unusual conditions, such as abnormal inching or jogging requirements, short repeated travel drive movements, altitudes over 3,300 ft above sea level, abnormal ambient temperatures, etc., the motor time rating must be increased accordingly.

NUM-III-8422.4 Traverse Motor Size Selection. The traverse motor rating is basically the mechanical horsepower with considerations for the effect of control and ambient temperature.

(a) Required Motor Horsepower, Indoor Cranes

(1) The bridge motor shall be selected so that the horsepower rating is not less than that given by the following formula:

Copyright ASME International
Provided by IHS under license with ASME
No reproduction or networking permitted without license from IHS
Not for Resale

Table NUM-III-8422.4-1
Standard Values for Friction Factor, *f*
(For Bridges With Metallic Wheels and Anti-Friction Bearings)

Wheel Diameter, in.	*f*, lb/ton	
	Top Running	Under Running
18	15	. . .
15	15	18
12	15	18
10	15	18
8	16	20
6	16	20
5	18	22
4	20	24

GENERAL NOTES:
(a) Standard values for friction factor, *f*, from CMAA 74.
(b) For cranes equipped with sleeve bearings of normal proportions, a friction factor of 24 lb per ton may be used.
(c) The above friction factors may require modifications for other variables, such as low efficiency worm gearing, nonmetallic wheels, special bearings, and unusual rail conditions.

$$HP = K_a \times W \times V \times K_s \qquad (75)$$

where

V = rated drive speed, ft per min
W = total weight to be moved including all dead and live loads, tons
K_a = acceleration factor for type of motor used
K_s = service factor, which accounts for the type of drive and duty cycle; 1.0 for AC magnetic and DC adjustable-voltage controls (for other types of controls, consult control manufacturer)

$$K_a = \frac{f + \dfrac{2000a \times C_r}{g \times E}}{33{,}000 \times K_t} \times \frac{N_r}{N_f} \qquad (76)$$

where

E = mechanical efficiency of drive machinery expressed as a per unit decimal (for guidance, see Table NUM-III-8422.4-1)
a = average or equivalent uniform acceleration rate, ft per sec per sec up to rated motor rpm (for guidance, see Tables NUM-III-8422.4-2 and NUM-III-8422.4-3)
f = rolling friction of drive (including transmission losses, lb per ton; see Table NUM-III-8422.4-4)
g = 32.2 ft per sec per sec

Table NUM-III-8422.4-2
Standard Maximum Acceleration Rate to Prevent Wheel Skidding

Percent of Driven Wheels	Maximum Acceleration Rate, Dry Rails, ft per sec per sec (Based on 0.2 Coefficient of Friction)	Acceleration Rate, Wet Rails (Based on 0.12 Coefficient of Friction)
100	4.8	2.9
50	2.4	1.5
33.33	1.6	1.0
25	1.2	0.7
16.67	0.8	0.5

GENERAL NOTES:
(a) Standard maximum acceleration rate to prevent wheel skidding from CMAA 74.
(b) The values given above are based on the peak acceleration torque being equal to 1.33 times the average acceleration torque.

Table NUM-III-8422.4-3 Standard Bridge Motion Acceleration Rates

Free Running Full Load Speed		*a* = Acceleration Rate for AC or DC Motors, ft per sec per second [Note (1)]
ft per min	ft per sec	
60	1.0	0.25 min.
120	2.0	0.25–0.80
180	3.0	0.30–1.0
240	4.0	0.40–1.0
300	5.0	0.50–1.1

GENERAL NOTES:
(a) Standard bridge motion acceleration rates from CMAA 74.
(b) The actual acceleration rates shall be selected to account for proper performance, including such items as acceleration time, free-running time, motor and resistor heating, duty cycle, load-spotting capability, and hook swing. (The acceleration rates shall not exceed the values shown in Table NUM-III-8422.4-3.) To avoid wheel skidding, the acceleration rate should not exceed the values shown in Table NUM-III-8422.4-2.

NOTE:
(1) For DC series motors, the acceleration rate, *a* is the value occurring while on series resistors. This would be in the range of 50 to 80 percent of the free-running speed (N_f).

C_r = rotational inertia factor; for equipment governed by this Standard,

$$C_r = 1.05 + \frac{a}{7.5} \qquad (77)$$

K_t = equivalent steady-state torque relative to rated motor torque, which results in accelerating up

Copyright ASME International
Provided by IHS under license with ASME
No reproduction or networking permitted without license from IHS
Not for Resale

Table NUM-III-8422.4-4 Mechanical Efficiency, *E*, of Drive Machinery

Efficiency Values	
Bearings	***E* [Note (1)]**
Anti-friction	0.97
Sleeve	0.93

GENERAL NOTE: Mechanical efficiency, *E*, of drive machinery from CMAA 74.

NOTE:
(1) The values of gear efficiency shown apply primarily to spur, herringbone, and helical gearing, and are not intended for special cases such as worm gearing, friction drives, chain drives, etc.

to rated motor rpm (N_r) in the same time as the actual variable torque speed characteristic of the motor and control characteristic used (see Table NUM-III-8422.4-5 for standard values of K_t)

N_f = free-running rpm of motor when driving at speed V

N_r = rated speed of motor at full load, rpm

(2) Latitude is permitted in selecting the nearest rated motor horsepower over or 5% under the required horsepower to utilize commercially available motors. In either case, consideration must be given to proper performance of the drive.

(b) Required Motor Horsepower, Outdoor Cranes

(1) Compute the free-running bridge motor horsepower (*HPF*) at rated load and rated speed, neglecting any wind load, using the following formula:

$$HPF = \frac{W \times V \times f}{33{,}000} \quad (78)$$

where

V = full load speed, ft per min

W = full load weight to be accelerated, tons

f = friction factor, lb per ton (per Table NUM-III-8422.4-1)

(2) Compute the free-running bridge motor horsepower due to wind force only (*HPw*) using the following formula:

$$HPw = \frac{P \times \textit{wind area} \times V}{33{,}000 \times E} \quad (79)$$

where

E = bridge drive mechanical efficiency

P = wind pressure, lb per square ft (computed from the formula $P = 0.004 (Vw)^2$, where Vw is the wind velocity, miles per hr; when Vw is unspecified, $P = 5$ lbs per square foot shall be used)

V = full load speed, ft per min

wind area = effective crane surface area exposed to wind, square ft (as computed in NUM-III-8200)

(3) The bridge drive motor horsepower shall be selected so that its horsepower rating is not less than that given by the following formula:

$$\text{Required motor horsepower} = 0.75(HPF + HPw)K_s$$

(4) The following items must be considered in the overall bridge drive design to assure proper operation under all specified load and wind conditions:

(a) proper speed control, acceleration, and braking without wind;

(b) ability of control to reach full speed mode of operation against wind;

(c) bridge speed, on any control point, when traveling with the wind, not to exceed the amount resulting in the maximum safe speed of the bridge drive machinery;

(d) avoidance of wheel skidding, which could likely occur under no load, low-percent driven wheels, and wind conditions; and

(e) sufficient braking means to maintain the bridge braking requirements.

(c) Motor Selection Versus Drive Gear Ratio

(1) The drive gear ratio is computed by the following formula:

$$\text{Bridge drive gear ratio} = \frac{N_f \times D_w \times \pi}{V \times 12} \quad (80)$$

where

V = specified full-load travel drive speed, ft per min

D_w = wheel tread diameter, in.

N_f = free-running rpm of the motor, after the drive has accelerated, with rated load to the steady-state speed, V (the value of N_f is established from the motor control speed-torque curves at the free-running horsepower, *HP FR*)

(2) Variations from the calculated gear ratio are permissible to facilitate the use of standard available

Copyright ASME International
Provided by IHS under license with ASME
No reproduction or networking permitted without license from IHS
Not for Resale

Table NUM-III-8422.4-5 Standard Values of Accelerating Torque Factor, K_t

Type of Motor	Type of Control	K_t [Note (1)]
AC Wound Rotor	Contactor–Resistor	1.3–1.5 [Note (2)]
AC Wound Rotor	Static Stepless	1.3–1.5 [Note (2)]
AC Squirrel Cage	Ballast Resistor	1.3
AC Inverter	Inverter	1.5
DC Shunt Wound	Adjustable Voltage	1.5
DC Series Wound	Contactor-Resistor	1.35

GENERAL NOTE: Standard values of accelerating torque factor, K_t, from CMAA 74.
NOTES:
(1) K_t is a function of control and/or resistor design.
(2) Low end of range should be used for applications with permanent slip resistance.

ratios, provided that motor heating and operational performance is not adversely affected. The actual full-load drive speed may vary a maximum of ±10% of the specified full-load speed.

NUM-III-8423 Brakes. This section covers the electrical requirements for spring-set friction-type brakes used as either a service brake, emergency stopping brake, or parking brake. Brake selection, sizing, and design shall be in accordance with the brake requirements, as applicable, of ASME B30.11, ASME B30.16, and ASME B30.17, including the further specific requirements of this section and of NUM-III-8332.

NUM-III-8423.1 Electrical Operating and Excitation Systems

(a) The electrical operating and excitation system shall have a thermal rating for the frequency and duration of the specified operations and the thermal time rating shall equal or exceed the corresponding drive-motor time rating.

(b) Any electrical traverse-drive brake used only for emergency stop on power loss, or set by operator choice, shall have a coil thermal rating for continuous duty.

(c) Brakes with DC shunt coils shall release at 80% and operate without overheating at 110% of the rated excitation system voltage.

(d) Brakes with AC coils shall release at 85% and operate without overheating at 110% of the rated excitation system voltage.

NUM-III-8424 Disconnects and Protective Devices

NUM-III-8424.1 Disconnects. All disconnects shall be in accordance with the requirements of ANSI/NFPA 70, Article 610.

(a) Main Manual Crane Disconnect

(1) All motorized cranes and manually operated cranes with either an electric hoist or motorized trolley, shall be furnished with a current-rated circuit breaker or motor-rated switch, lockable in the open position, in the leads from the runway contact conductors or other power supply.

(2) On all manually operated cranes with either an electric hoist or motorized trolley, the main manual crane disconnect may be deleted, provided all of the following criteria are met:

(a) the unit is floor controlled,

(b) the unit is in view of the power supply disconnect, and

(c) no fixed work platform has been provided for servicing the unit.

(3) The continuous ampere rating of the main manual disconnect shall be not less than 50% of the combined short-time rating of the motors, nor less than 75% of the sum of the short-time rating of the motors required for any single motion.

(b) Additional Disconnects. Where the main manual disconnecting means is not readily accessible from the crane operating station, a means shall be provided at the operating station to open the power circuit to all

Copyright ASME International
Provided by IHS under license with ASME
No reproduction or networking permitted without license from IHS
Not for Resale

motors of the crane. Although manually operated rope disconnects are available, the most common disconnect for this application is a mainline magnetic disconnect where a control circuit opens a mainline magnetic contactor. (See NUM-III-8421.4 for contactor ratings.)

NUM-III-8424.2 Protective Devices

(a) Crane Overcurrent Protection. The crane shall be protected by a main overcurrent device in accordance with ANSI/NFPA 70, Article 610. In many cases, the main manual disconnect and crane overcurrent devices are furnished as a single unit, being either a circuit breaker or fused disconnect.

(b) Branch Circuit Overcurrent Protection. Motor branch circuits shall be protected by fuses or inverse-time circuit breakers in accordance with ANSI/NFPA 70, Article 610.

(c) Branch Circuit Overload Protection. Each motor, motor control, and branch circuit conductor shall be protected from overload in accordance with ANSI/NFPA 70, Article 610.

(d) Undervoltage Protection. Undervoltage protection shall be provided as a function of each motor controller, or an enclosed protective panel, or a magnetic mainline contactor, or a manual-magnetic disconnect switch.

(e) Control circuits shall be protected in accordance with ANSI/NFPA 70, Article 610.

NUM-III-8425 Operator Stations and Controllers. The operator station location shall utilize either pendant push-button controllers, cab-operated master-switch controllers, or radio-transmitter lever-switch controllers. One or more operator stations may be provided, using either the same type or a different type of controller, as required by the owner. The control station shall be clearly marked to indicate the function of the control device and indicator.

NUM-III-8425.1 Pendant Push-Button Controllers. Pendant push-button controllers shall meet the following requirements:

(a) The arrangement of pendant push buttons shall conform to Fig. NUM-III-8425.1-1, unless otherwise required by the owner. The relative arrangements of the push buttons should be standardized at each facility.

(b) Push buttons shall return to the "off" position when pressure is released by the crane operator.

(c) Pendant stations shall have a grounding conductor between a ground terminal in the station and the crane.

(d) The maximum voltage in pendant push-button stations shall be 150 volts AC or 300 volts DC.

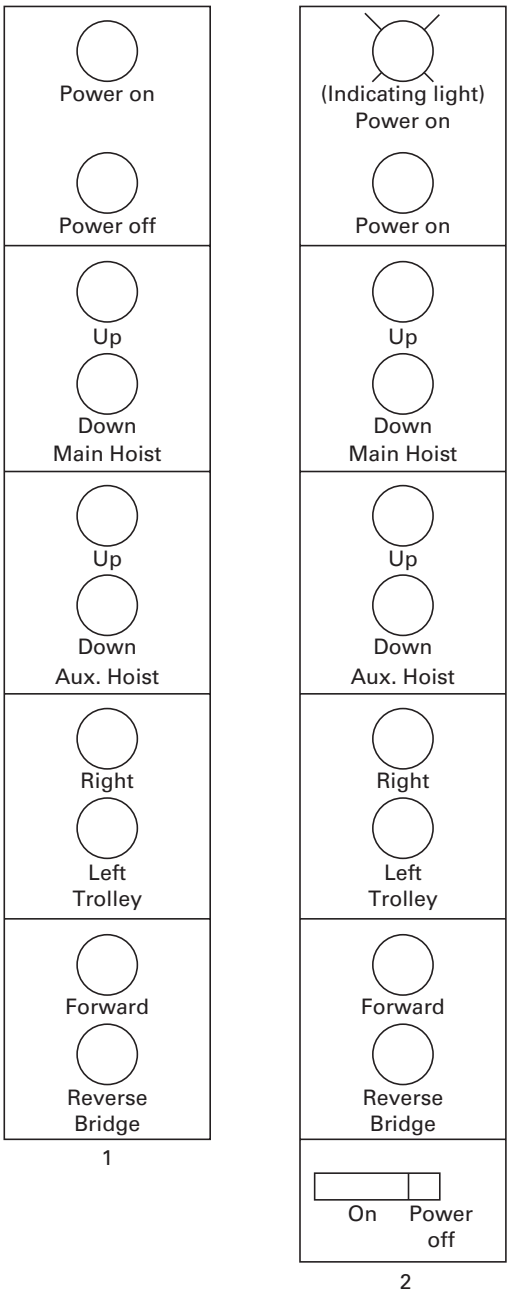

Fig. NUM-III-8425.1-1 Arrangement of Pendant Push-Button Controllers

(e) Push buttons shall be guarded or shrouded to prevent accidental actuation of crane motions.

(f) Pendant push-button stations shall be supported in a manner that will protect the electrical conductors against strain.

(g) Minimum wire size of multiconductor flexible cords for pendant push-button stations shall be #16

Copyright ASME International
Provided by IHS under license with ASME
No reproduction or networking permitted without license from IHS
Not for Resale

AWG unless otherwise permitted by ANSI/NFPA 70, Article 610.

(h) Pendant-control stations shall be constructed to prevent electrical shock.

NUM-III-8425.2 Cab-Operated Master-Switch Controllers. Cab-operated master-switch controllers shall meet the following requirements:

(a) The arrangement of cab master switches shall conform to Fig. NUM-III-8425.2-1, unless otherwise required by the owner. Inappropriate controllers shall be deleted. The relative arrangements of the master switches should be standardized at each owner's location.

(b) Master switches shall be within reach of the operator.

(c) Cab master switches shall be provided with a notch or spring-return arrangement latch, which in the "off" position prevents the handle from being inadvertently moved to the "on" position.

(d) The movement of each switch handle should be in the same direction as the resultant movement of the load.

(e) Cranes furnished with skeleton (dummy) cabs are operated by either a pendant push-button station or radio transmitter, and, therefore, do not require master switches unless otherwise required by the owner.

NUM-III-8425.3 Radio-Transmitter Lever-Switch Controllers. Radio-transmitter lever-switch controllers shall meet the following requirements:

(a) The arrangement of radio-transmitter lever switches shall conform to Fig. NUM-III-8425.3-1, unless otherwise required by the owner. Inappropriate controllers shall be deleted. The relative arrangements of the lever switches should be standardized at each owner's location.

(b) In order for a radio-transmitter lever-switch controller to start and maintain a crane motion, there must be a permissive radio signal in addition to a crane motion signal.

NUM-III-8426 Electrical Enclosures. Control enclosures, unless otherwise specified by the owner, shall be NEMA Type 1, general purpose for indoor applications, in accordance with NEMA ICS 6. Other types, as defined by NEMA, include but are not limited to:

(a) NEMA Type 3: watertight, dust tight, and sleet (ice) resistant; outdoor.

(b) NEMA Type 3R: rainproof and sleet resistant; outdoor.

(c) NEMA Type 4: watertight and dust tight; indoor and outdoor.

(d) NEMA Type 4X: watertight, dust tight, and corrosion resistant; indoor and outdoor.

(e) NEMA Type 7: Class I, Groups A, B, C, and D; indoor hazardous locations (explosive atmosphere).

(f) NEMA Type 9: Class II, Groups E, F, and G; indoor hazardous locations (explosive atmosphere).

(g) NEMA Type 12: industrial use; dust tight and drip tight; indoor.

NUM-III-8427 Current Conductor Systems

NUM-III-8427.1 Categories of Conductor Systems. Conductor systems shall be considered in the following three general categories:

(a) Runway Systems. Conductor power from the building supply to the crane.

(b) Bridge Systems. Conductor power and control between the bridge and trolley portions of the crane.

(c) Auxiliary Systems. Such as pendant push button, communication, remote control, and instrumentation cables.

NUM-III-8427.2 Conductor System Types

(a) When AC variable frequency controls are used, the runway and bridge conductor systems shall include a grounding conductor.

(b) Standard types of conductor systems are as follows, with examples of the various styles of these types shown in Fig. NUM-III-8427.2-1.

(1) Contact Conductor. These systems may consist of either a rigid bar or taut wire, with a sliding or rolling collector. To ensure continuous contact on Type I, Type II, or Type III systems that use AC variable frequency drives or DC motor drives, there shall be at least two spring-loaded contact shoes per phase on the main line systems, in the primary circuit of AC motors, and in any DC motor armature circuit that does not supply current to a series brake. Adequate expansion means shall be incorporated to allow for building expansions and contractions as specified. Where low contact resistance is required for low-current or low-voltage pilot devices, such as tachometer generators, a combination of conductor and collector materials shall be suitable for that usage.

NOTE: While taut wire arrangements are present on many existing systems, the use of an insulated taut wire system is not recommended on new applications due to inherent safety issues.

(2) Brush-Type Cable Reel. These systems consist of a cable that is played out off a reel and uses a slip-ring and brush arrangement to maintain electrical contact. Where low-contact resistance is required for low-current or low-voltage pilot devices, such as ta-

--`,,```,,,,````-`-`,,`,,`,`,,`---

Copyright ASME International
Provided by IHS under license with ASME
No reproduction or networking permitted without license from IHS Not for Resale

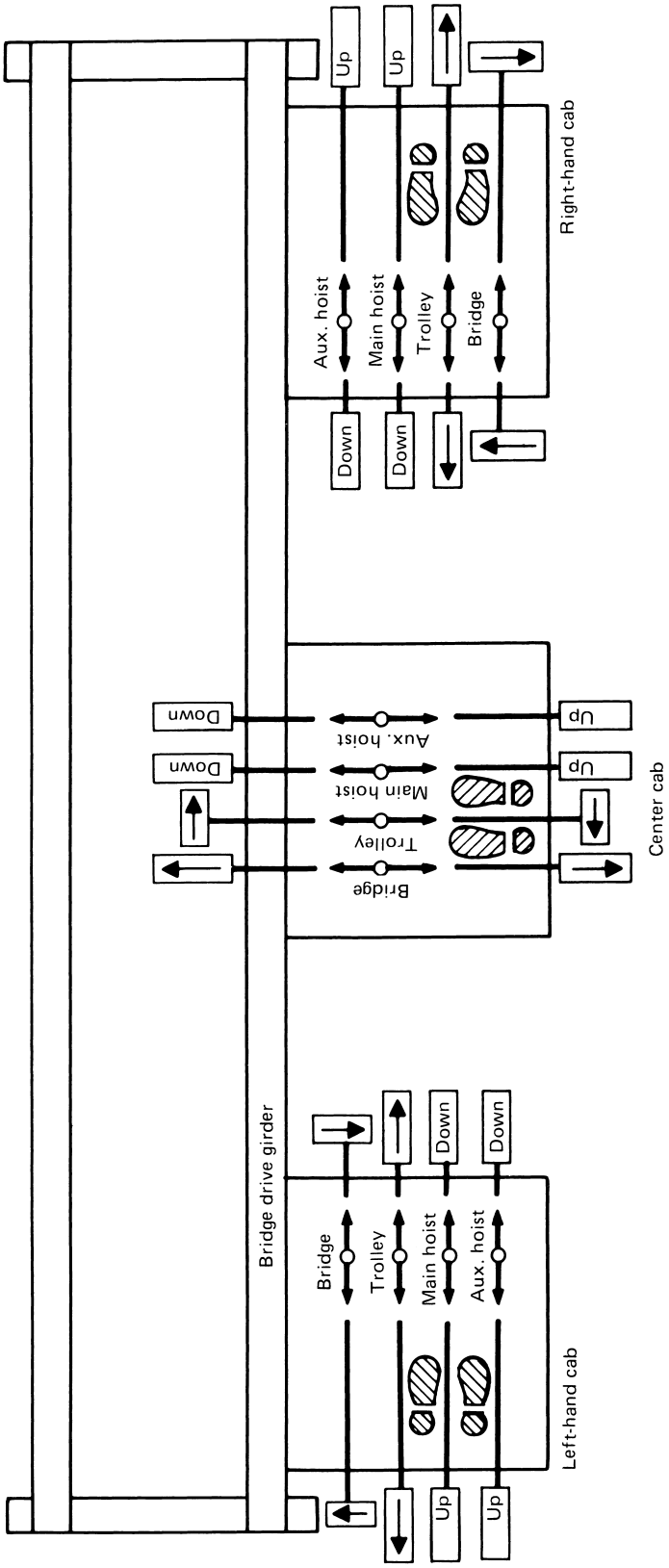

Fig. NUM-III-8425.2-1 Arrangement of Cab Master-Switch Controllers

Copyright ASME International
Provided by IHS under license with ASME
No reproduction or networking permitted without license from IHS
Not for Resale

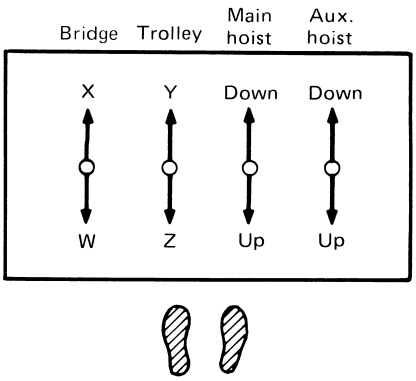

Fig. NUM-III-8425.3-1
Arrangement of Radio-Transmitter Lever-Switch Controllers

chometer generators, a combination of slip ring and brush materials shall be suitable for that usage.

(3) Flexible Continuous Conductor. These systems consist of a continuous flexible cable, either flat or round, which is suspended in a festooned arrangement from a trolley and track system, or in a cable carrier.

NUM-III-8427.3 Conductor System Design

(a) Current conductors shall have sufficient ampacity to carry the required current to the crane, or cranes when operating with rated load. The conductor ratings shall be selected in accordance with ANSI/NFPA 70, Article 610. For manufactured conductor systems with published ampacities, the intermittent ratings may be used. The ampacities of fixed loads, such as heating, lighting, and air conditioning, may be computed as 2.25 times their sum total, which will permit the application of intermittent ampacity ratings for use with continuous fixed loads.

(b) The type of runway conductor system shall be suitable for the application and environmental conditions, and shall be approved by the owner since it interfaces with the building structure. See also the criteria of NUM-III-8430.

(c) The type of bridge conductor and auxiliary conductor systems shall be suitable for the application and environment.

(d) Runway contact conductors shall be enclosed or guarded.

(e) Bridge contact conductors shall be enclosed, guarded, or located in a manner such that persons cannot inadvertently touch energized current-carrying parts.

(f) All sections of contact conductors shall be mechanically joined to provide a continuous electrical connection, except for the use of required expansion joints and jumper cables.

NUM-III-8428 Warning Devices

(a) On cab-operated cranes and remote-operated cranes, a gong or other warning means shall be provided for each crane equipped with a power-traveling mechanism.

(b) On pendant-push-button-controlled cranes, a gong or other warning means shall be provided if required by the owner.

NUM-III-8429 Auxiliary Electrical Equipment

(a) Travel Limit Switches. End of travel limit switches shall be provided if required by the owner.

(b) Heating, Ventilating, and Air Conditioning. Heating, ventilating, and air conditioning for an enclosed operator's cab shall be provided if required by the owner.

(c) Convenience Outlets. Convenience outlets shall be provided if required by the owner.

NUM-III-8430 Wiring Materials and Methods

(a) The wiring system shall meet the requirements of ANSI/NFPA 70, Article 610 as supplemented by this section.

(b) The provisions of this section apply to interconnecting wiring both within and external to control panel enclosures. It does not apply to wiring that forms an integral part of equipment, such as motors, individual control components (e.g., contactors, transformers, and relays), and electronic control subassemblies.

(c) The complete raceway system including wire shall be assembled on the crane at the crane manufacturer's facility. Where disassembly is necessary for shipment, components shall be match-marked for ease of field erection. Where any portion of a raceway run must be disconnected or dismantled to permit shipment, the wire shall not be pulled through that raceway during shop assembly. Wire not pulled shall be cut to approximate length and bound in coils marked for the circuit to which it applies.

NUM-III-8431 Wiring Materials

NUM-III-8431.1 Conductors

(a) Individual conductors, including those in multiconductor cables, shall have a maximum operating temperature rating not less than 75°C.

(b) Multiconductor cable shall be permitted in wiring the crane. The cable used shall comply with the require-

Copyright ASME International
Provided by IHS under license with ASME
No reproduction or networking permitted without license from IHS
Not for Resale

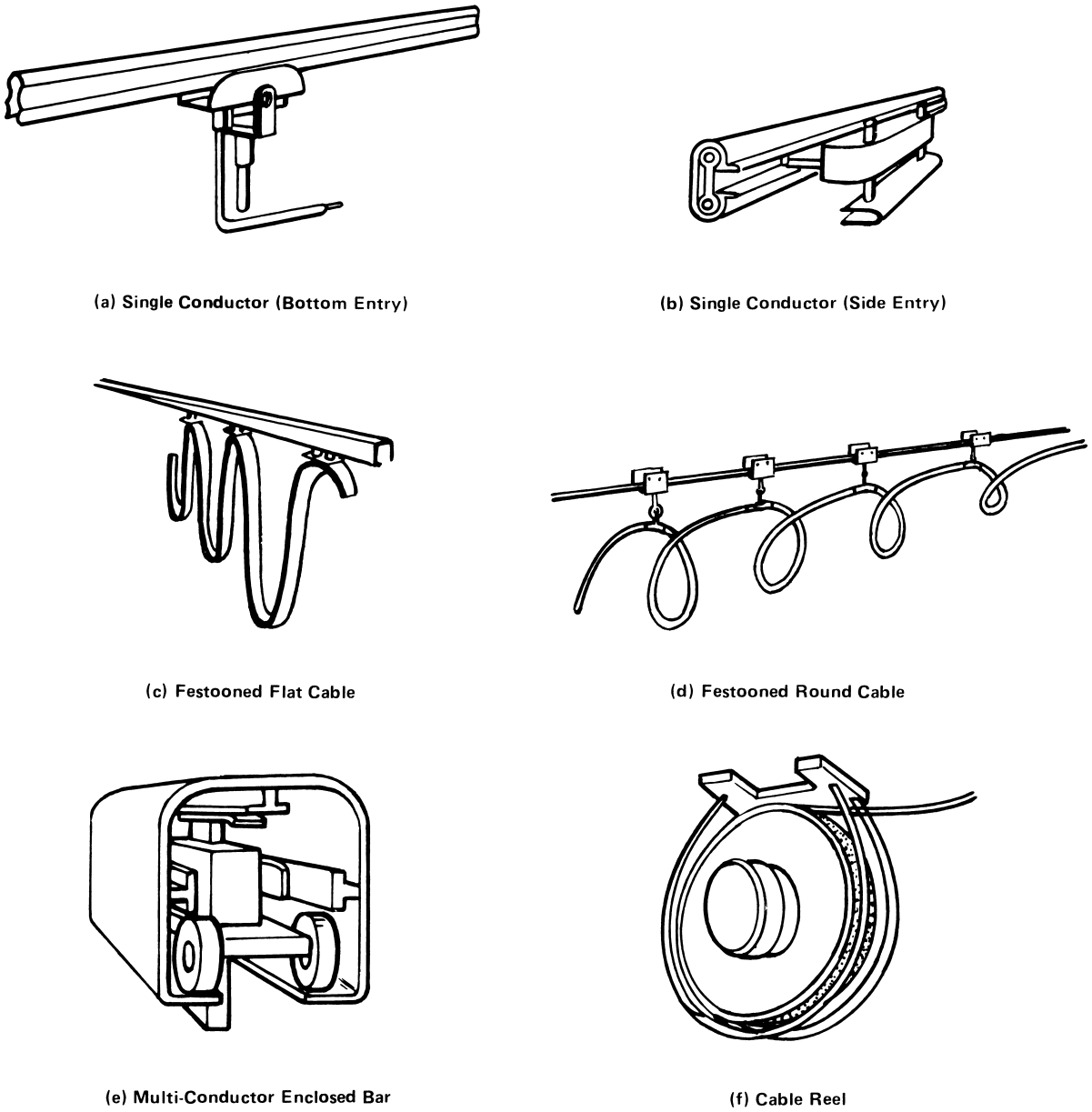

Fig. NUM-III-8427.2-1 Various Styles of Conductor System Types

ments of ANSI/NFPA 70. Flexible service cable shall be used when required for the application, such as in a festooned flexible continuous conductor system.

(c) Minimum sizes of conductors (excluding electronics) shall be as follows:

(1) Number 14 AWG for power and lighting circuits

(2) Number 16 AWG for control circuits

(d) Conductors shall be annealed copper with minimum stranding as follows:

(1) ASTM B 8 Class B for nonflexing service

(2) ASTM B 174 Class K for flexing service

(e) Color coding, if required by the owner, shall be in accordance with NEMA ICS 1.

(f) All control conductors and cables used with AC inverter-type controls and having operating voltages less than 110 V shall be of shielded type.

--`,,```,,,,````-`-`,,`,,`,`,,`---

Copyright ASME International
Provided by IHS under license with ASME
No reproduction or networking permitted without license from IHS
Not for Resale

NUM-III-8431.2 Raceways

(a) Wiring external to control panel enclosures or assemblies of control panels with integral raceways shall be installed in rigid metal conduit, except as otherwise permitted in this section or as approved by the owner.

(b) Short lengths of open conductors shall be permitted at collectors and within enclosures or guards for resistors and transformers.

(c) Conduit smaller than $^{3}/_{4}$-in. diameter trade size shall not be used.

(d) Flexible metal conduit may be used to enclose conductors to stationary or infrequently moved devices, such as motors, brakes, master switches, and limit switches, or to equipment subject to vibration.

(e) Connections to moving parts (bridge to trolley, bridge or trolley to pendant push-button station) may be made by flexible cable not enclosed in conduit. Where flexible cable is used, some form of strain relief shall be provided.

(f) Conduit shall be rigidly attached to the crane by conduit supports.

NUM-III-8432 Wiring Methods

(a) All conductors shall be identified at each termination by a marking that corresponds to the schematic diagram.

(b) Conductors shall be run from terminal to terminal without splices except at devices with integral leads or within junction boxes.

(c) Pressure-type connectors shall be provided on all wires connected to terminals not equipped with a means for retaining conductor strands.

(d) All external conductors for control circuits shall be routed through terminal blocks with no more than two conductors terminated at each connection point.

(e) Panel wiring shall be routed in a manner that will not interfere with inspection and maintenance of devices.

(f) Control conductors external to AC inverter controls that connect to components subject to detrimental effects due to electromagnetic interference induced in the conductor from other conductors or electrical equipment shall be of a design or installed in such a manner that prevents such effects. Examples include:

(1) Use individually shielded twisted pair conductors for tachometers or encoder connections.

(2) Route such conductors through a separate conduit.

(3) Refrain from splicing connections.

NUM-III-8500 INSPECTION AND TESTING

NUM-III-8510 General

NUM-III-8511 Scope. This section describes the general inspection and testing requirements for all NUM-III cranes, monorails, and hoists beginning prior to manufacture and continuing through delivery, erection, acceptance load testing, and inspection at the erection site. Each crane, monorail, and hoist shall be examined for compliance with the requirements specified and with the approved drawings. This element of inspection shall include a visual examination and dimensional checks, and nondestructive examinations of hooks as specified herein.

NUM-III-8512 Responsibility. Unless otherwise specified by the owner, the manufacturer is responsible for the performance of all inspection requirements as specified herein. The owner shall be permitted to witness inspections and tests as well as any inspections and tests to be performed at the erection site.

NUM-III-8513 Documentation. All inspections and tests performed on the crane, monorail, or hoist, both at the plant and at the site, shall be fully documented in reports with copies furnished to the owner.

NUM-III-8520 Inspection by Seller Prior to and During Manufacture

NUM-III-8521 Structural. Structural components shall be visually and dimensionally inspected for conformance with drawing requirements and specifications.

NUM-III-8521.1 Welds. All structural welds shall be visually inspected over their entire lengths. Acceptance criteria of welds and repair shall be in accordance with AWS D1.1 or EPRI NP-5380, as specified by the owner. Nondestructive testing (radiograph or ultrasonic) of groove welds shall be in accordance with Table NUM-III-8234.1-2. Other nondestructive testing, if required, shall be specified by the owner.

NUM-III-8521.2 Component Fit-up. Structural components shall be inspected to ensure that they are properly aligned and fitted without inducing built-in stresses.

NUM-III-8522 Mechanical

NUM-III-8522.1 Hooks

NUM-III-8522.1.1 Proof Load Test. If required by the owner, hooks shall be proof load tested,

Copyright ASME International
Provided by IHS under license with ASME
No reproduction or networking permitted without license from IHS
Not for Resale

including dimensional inspection. Unless otherwise specified, such testing and criteria for acceptance shall be in accordance with ASME B30.10.

NUM-III-8522.1.2 Nondestructive Test

(a) If required by the owner, hooks shall be MT or PT inspected in accordance with ASTM A 275, ASTM E 709, and/or ASTM E 165.

(b) Magnetic-particle and liquid-penetrant acceptance criteria shall be as follows:

(1) Indications with any dimension over $^{1}/_{16}$ in. are unacceptable on material under 2 in. thick; on material 2 in. and over, indications with any dimension over $^{1}/_{8}$ in. are unacceptable.

(2) Four or more indications of any size separated by less than $^{1}/_{16}$ in. edge to edge is unacceptable on material under 2 in. thick; on material 2 in. and over, less than $^{1}/_{8}$ in. edge to edge is unacceptable.

(3) Ten or more indications of any size in any 6 square in. determined with the major dimension taken in the most unfavorable location relative to the indications but not exceeding 6 in. in length, is unacceptable.

(4) Indications may be explored to determine if they are the result of material discontinuities, material properties, or part geometry. Only indications resulting from material discontinuities shall be considered unacceptable; however, all indications identified that exceed the criteria in (1) through (3) above shall be recorded in the test report.

(c) Nonrepairable transverse indications are unacceptable within the tensioned sections of the hook. Repairs by welding on the hook are not acceptable.

NUM-III-8522.1.3 Visual Inspection. Visually inspect hook and nut threads for adequacy and freedom from damage.

NUM-III-8522.2 Wire Rope and Chain

NUM-III-8522.2.1 Wire Rope. If required by the owner, a segment of the wire rope shall have a pull test to the breaking strength in accordance with Federal Specification RR-W-410.

NUM-III-8522.2.2 Chain. If required by the owner, a segment of the load chain shall have a pull test to the breaking strength in accordance with Federal Specification RR-C-271.

NUM-III-8523 Electrical

NUM-III-8523.1 Visual. The electrical system shall be inspected to ensure that components, such as panels, switches, resistors, wiring, fuses, thermal overload devices, etc., are installed in accordance with drawing and/or specification requirements. Terminal and motor connections shall be checked for tightness. Electrical holding brakes shall be adjusted to correct torque settings. Conductors shall be inspected for identification at each termination in accordance with the schematic diagram.

NUM-III-8523.2 Operation. Electrical components shall be checked out prior to and/or during shop tests to ensure that they operate as designed.

NUM-III-8530 Shop Operational Tests

NUM-III-8531 Prerequisites. Prior to conducting the shop no-load test, the lifting equipment or applicable portions to be tested shall be assembled and wired subject to the following:

(a) The equipment or its applicable portions need not be completely assembled, wired, or painted at time of testing if subsequent work will not influence or alter the results of the test.

(b) Temporary electrical connections for test purposes are acceptable for normally installed field wiring.

(c) When testing the operations of mechanical portions of the crane, monorail, or hoist, the use of a temporary controller is acceptable unless otherwise specified by the owner.

(d) When testing electrical portions of the crane, monorail, or hoist, they shall be tested with the actual equipment controls unless specifically excepted by the owner.

(e) The assembled crane, monorail, or hoist shall be square and in alignment with parts fitted and adjusted properly.

NUM-III-8532 Testing

(a) Cranes and Monorails. All drives shall be verified under no load conditions.

(b) Hoists. Testing shall be in accordance with ASME B30.16. Mechanical load brakes shall be tested under load to verify proper operation.

NUM-III-8540 Preparation for Shipment

NUM-III-8541 Disassembly. Equipment that has been assembled for shop testing shall be disassembled only as required for shipment to the erection site or specified storage facility.

NUM-III-8542 Marking and Tagging. Each item or subassembly shall be marked and/or tagged with its name and drawing, assembly, and item or subassembly identification. Items disconnected for handling and ship-

Copyright ASME International
Provided by IHS under license with ASME
No reproduction or networking permitted without license from IHS Not for Resale

ping shall be match-marked for reassembly at the erection site. Marking shall be accomplished using a method that is not detrimental to the material, e.g., sharp bottom stamps shall not be used for marking structural components that will be subjected to high stresses.

NUM-III-8543 Inspection. Prior to shipment, all items, assemblies, or subassemblies shall be inspected to ensure that they are complete, undamaged, properly identified, and properly packaged.

NUM-III-8544 Packaging. Packaging of items to be shipped shall be as required to provide protection from handling and/or shipping damage, which could occur during such shipment. All items, assemblies, or subassemblies shall be accurately identified and listed in the bill of lading as necessary for performance of receipt inspection at the erection site or storage facility.

NUM-III-8550 Receipt Inspection by Owner

NUM-III-8551 Verification. All items, subassemblies, or assemblies shall be checked against the bill of lading for proper identification and verification of receipt. Discrepancies shall be reported to the transporter and to the shipper.

NUM-III-8552 Condition. All items, subassemblies, or assemblies shall be inspected for corrosion, contamination, deterioration, or physical damage resulting from their being shipped. Damage shall be reported to the shipper.

NUM-III-8553 Documentation. Receipt of documentation as required by the owner or this Standard, as applicable, shall be verified by the owner.

NUM-III-8560 Storage by Owner Prior to Erection

NUM-III-8561 Preparation for Storage. When receiving inspection of an item has been completed, the item shall be in satisfactory condition for storage. Assure that pipe caps or covers removed for receiving inspection are replaced, machined surfaces are protected, and crated items have been recrated (if applicable) in accordance with the owner's requirements governing preparation for shipment and storage.

NUM-III-8562 Storage Requirements. Items, assemblies, or subassemblies should be stored in an atmosphere that will provide protection from damage or deterioration from other work or traffic, adverse weather conditions, fires, flooding, etc.

NUM-III-8570 Inspection by Owner at Erection

NUM-III-8571 Prerequisites

(a) Inspections or checks, as appropriate, shall be performed to verify that conditions of the installation area conform to specified requirements and that precautions have been taken to prevent conditions that will adversely affect the quality of the item during installation.

(b) Permanent crane runway supports and mountings that will properly interface with the crane shall have been installed.

NUM-III-8572 Inspection During Assembly. Inspections of the work areas and the work in progress shall be performed to verify that crane components are being located, installed, assembled, or connected in compliance with the latest approved-for-construction drawings, this Standard, installation instructions, and procedures.

Inspections performed shall include, as appropriate, the following:

(a) identification;

(b) location and orientation of components;

(c) leveling and alignment;

(d) clearances and tolerances;

(e) tightness of connections and fasteners;

(f) fluid levels and pressures;

(g) cleanliness;

(h) welding operations, including materials and process controls; and

(i) adequacy of housekeeping, barriers, and protective equipment to assure that items will not be damaged or contaminated as a result of adjacent construction activities.

NUM-III-8573 Assembled Inspection. Checks shall be performed to verify that all components have been correctly installed. If construction or associated activities affect the results of these checks, the checks shall be repeated, if necessary, to assure that the quality has not been adversely affected.

Checkout procedures to verify correctness of installation and ability to function shall include the following mechanical elements:

(a) mating parts, such as couplings, are properly positioned;

Copyright ASME International
Provided by IHS under license with ASME
No reproduction or networking permitted without license from IHS
Not for Resale

(b) proper greasing or lubrication has been completed;

(c) casings, reservoirs, etc., are primed, vented, and filled;

(d) reeving shall conform to manufacturer's instructions; check end attachments for proper installation; and

(e) control of specified bolting method and the following electrical elements:

(1) electrical connections inspected for good contact and conformance with wiring diagram, and

(2) bridge conductor-collector system inspected for proper alignment.

NUM-III-8580 Site Load Testing

NUM-III-8581 Preoperational Testing and Inspection. A preoperational testing and inspection program shall be established to demonstrate that the equipment will perform satisfactorily in service. The preoperational testing shall be performed in accordance with written test procedures that incorporate acceptance criteria. Unless otherwise specified by the owner, the owner or his designated representative(s) shall:

(a) witness the preoperational tests called for in these procedures;

(b) furnish all facilities necessary for the performance of such tests; and

(c) ensure that proper communications are established for control of testing.

These testing requirements shall be completed after the equipment has been installed and prior to construction/operational use of the crane, monorail, or hoist.

NUM-III-8582 No-Load Test. A no-load test will be performed after the power supply has been verified to be in accordance with equipment specifications to verify the following:

(a) motor rotation is correct;

(b) lubrication and cooling systems are in service;

(c) limit switches, interlocks, and stops are properly adjusted and set. Verify the minimum number of wraps of rope on the drum when the block is located at the lowest working level;

(d) instrumentation is calibrated and in service as required; and

(e) Controls are adjusted properly for all hoist, trolley, and bridge drives, as applicable, through their respective speed ranges.

NUM-III-8583 Rated Load Test. After the no-load tests are completed and prior to use for handling loads, the equipment shall be rated load tested.

(a) The crane, monorail, or hoist shall receive a rated load test of 125% (+5%, −0%) of the rated capacity. The load rating shall not exceed 80% of the maximum load sustained during the test nor the manufacturer's rated capacity.

(b) The rated load test shall consist of the following operations as a minimum requirement:

(1) Lift the test load a distance to ensure that the load is supported by the hoist and held by the hoist brakes. Hold for a minimum of 10 min.

(2) Transport the test load by means of the trolley (carrier) from one end of the crane bridge, jib, or monorail to the other. The trolley motion shall be smooth and regular. The trolley shall approach the limits of travel as close as practical in the event use area restrictions are imposed.

(3) For bridge and gantry cranes, transport the test load by means of the bridge or gantry for the full length of the runway in one direction with the trolley as close to the extreme right-hand end of the crane as practical, and in the other direction with trolley as close to the extreme left-hand end of the crane as practical.

When cranes operate on more than two runways (multiple truck cranes), the crane shall transport the test load for the full length of the runway with the test load under each of the intermediate trucks.

(4) Lower the test load; stop and hold the load with the brakes.

(5) Perform loss of power test by interrupting the main electrical power or air supply, as applicable, while lowering the test load at slow speed to verify that the brakes set and hold the load.

(6) Verify that the nameplate reflects the load rating per NUM-III-8583(a).

NUM-III-8584 Certification. A written report confirming the equipment has successfully passed the rated load test shall be furnished. This report shall be signed by representatives of all parties participating in the test.

Copyright ASME International
Provided by IHS under license with ASME
No reproduction or networking permitted without license from IHS
Not for Resale

MANDATORY APPENDIX IV
SI CONVERSION FACTORS

NUM-IV-1000 SI CONVERSION FACTORS

See Tables NUM-IV-1000-1 and NUM-IV-1000-2 below for conversion information relative to this Standard.

Table NUM-IV-1000-1 SI Conversion Factors

Quantity	English to SI	SI to English
length	1 inch = 2.54 centimeter 1 foot = 0.3048 meter 1 mil = 25.4 micrometer	1 cm = 0.3937008 in. 1 m = 3.2808399 ft 1 micrometer = 0.03937008 mil
area	1 $in.^2$ = 6.4516 cm^2 1 ft^2 = 0.09290304 m^2	1 cm^2 = 0.1550003 $in.^2$ 1 m^2 = 10.76391 ft^2
volume	1 $in.^3$ = 16.387064 cm^3 1 ft^3 = 0.028316847 m^3 1 gallon = 3.785412 liter	1 cm^3 = 0.06102374 $in.^3$ 1 m^3 = 35.31467 ft^3 1 l = 0.26417205 gal
velocity	1 ft/second = 0.3048 m/sec 1 ft/minute = 0.00508 m/sec 1 revolution per minute = 0.1047197 radian/sec	1 m/sec = 3.280839 ft/sec 1 m/sec = 196.8504 ft/min 1 radian/sec = 9.549297 rpm
mass	1 pound = 0.45359237 kilogram 1 ton (long) = 1016.0469088 kg 1 ton (long) = 1.016047 metric ton	1 kg = 2.2046226 lb 1 kg = 0.00098420653 ton (long) 1 metric ton = 0.98420653 ton (long)
acceleration	1 ft/sec^2 = 0.3048 m/sec^2 1 standard gravity = 9.806650 m/sec^2	1 m/sec^2 = 3.280840 ft/sec^2 1 std g = 32.174 ft/sec^2
force	1 pound-force = 4.44822 newton	1 n = 0.224809 lbf
bending, torque	1 ft-lbf = 1.35582 n-m	1 n-m = 0.737562 ft-lbf
pressure, stress	1 $lbf/in.^2$ = 6894.76 pascal ($n\text{-}m^2$) 1 $kip/in.^2$ = 6.89476 mega-pa 1 $lbf/in.^2$ = 0.0703070 kg/cm^2	1 pa = 0.000145038 $lbf/in.^2$ 1 mega-pa = 0.145038 $kip/in.^2$ 1 kg/cm^2 = 14.22334 $lbf/in.^2$
energy, work	1 British thermal unit = 1055.056 joule (n-m) 1 ft-lbf = 1.35582 j	1 j = 0.000947817 Btu 1 j = 0.737562 ft-lbf
power	1 horsepower = 745.7 watt (j/sec)	1 w = 0.00134102 hp
temperature	$t_c = (t_f - 32)/1.8$	$t_f = (t_c \times 1.8) + 32$

GENERAL NOTE: For others, see ASTM E 380.

Copyright ASME International
Provided by IHS under license with ASME
No reproduction or networking permitted without license from IHS
Not for Resale

Table NUM-IV-1000-2 Conversion Factors for Weight in Tons

English to Metric	Metric to English
ton (long) = 1.0160469 metric ton	1 metric ton = 0.9842065 ton (long)
US (United States) to Metric	**Metric to US (United States)**
ton (short) = 0.9071847 metric ton	1 metric ton = 1.1023113 ton (short)
English to US (United States)	**US (United States) to English**
ton (long) = 1.12 ton (short)	1 ton (short) = 0.8928571 ton (long)

GENERAL NOTE: For others, see ASTM E 380.

--`,,```,,,,````-`-`,,`,,`,`,,`---

Copyright ASME International
Provided by IHS under license with ASME
No reproduction or networking permitted without license from IHS

Not for Resale

NONMANDATORY APPENDIX A

NUM-A-1000 SERVICE CLASS (see NUM-G-3200)

NUM-A-1100 CRANE AND MONORAIL SERVICE CLASS

The crane service classification is based on the load spectrum reflecting the actual service conditions as closely as possible. The definition of CMAA crane service class in terms of load class and load cycles is shown in Table NUM-A-1100-1.

(a) Load spectrum is a mean effective load, which is uniformly distributed over a probability scale and applied to the equipment at a specified frequency. The selection of the properly sized crane component to perform a given function is determined by the varying load magnitudes and given load cycles that can be expressed in terms of the mean effective load factor.

$$k = \sqrt[3]{W_1{}^3P_1 + W_2{}^3P_2 + \ldots + W_n{}^3P_n}$$

where

P = Load probability, expressed as a ratio of cycles under each load magnitude condition to the total cycles. The sum total of the load probabilities P must equal 1.0.

W = Load magnitude, expressed as a ratio of each lifted load to the rated capacity. Operation with no lifted load and the weight of any attachment must be included.

k = Mean effective load factor. (Used to establish crane service class only.)

(b) All classes of cranes are affected by the operating conditions. Therefore, for the purpose of the classifications, it is assumed that the crane will be operating in normal ambient temperature 0° to 104°F and normal atmospheric conditions (free from excessive dust, moisture, and corrosive fumes).

(c) The cranes can be classified into loading groups according to the service conditions of the most severely loaded part of the crane. The individual parts, which are clearly separate from the rest or forming a self-contained structural unit, can be classified into different loading groups if the service conditions are fully known.

NUM-A-1200 ELECTRICALLY OPERATED HOIST SERVICE CLASS

NUM-A-1210 General Considerations. Service conditions have an important influence on the performance of wearing parts, including gears, bearings, rope, sheaves, electrical equipment, brake linings, load and lift limit devices, and wheels, of a hoist.

Careful consideration of the hoist duty service classifications described in this section will enable the user to evaluate the application and to obtain a hoist designed for optimum performance and minimum maintenance. If doubt exists regarding hoist selection, the hoist manufacturer should be consulted. Many factors enter into the selection of the proper hoist to perform a given function. Hoisting equipment consists of both mechanical and electrical components and both must be considered when analyzing the service the hoist must perform.

The factors that influence the mechanical and electrical performance of any hoist include:

(a) Load Distribution. The actual distribution or proportion of full and partial loads to be handled by the equipment, including lifting devices, has an important effect on the life of power transmission components. For example, ball bearing life generally varies inversely according to the cube of the load. A 2-ton hoist, operated at a mean effective load of 1 ton, will have a ball bearing life eight times that of the same hoist used steadily at its rated load.

(b) Operational Time. Operational time is the total running time of the hoist per hour or per work period.

(c) Work Distribution. This is determined by whether the operational time is uniformly distributed over the work period or concentrated in a short time span. Work distribution generally does not appreciably affect mechanical wear but does materially affect the electrical components such as motors, brakes, and controls. For

Copyright ASME International
Provided by IHS under license with ASME
No reproduction or networking permitted without license from IHS
Not for Resale

Table NUM-A-1100-1 Definition of CMAA Crane Service Class in Terms of Load Class and Load Cycle

Load Class [Note (1)]	Load Cycle [Note (2)]				K = Mean Effective Load Factor
	N_1	N_2	N_3	N_4	
L_1	A	B	C	D	0.35–0.53
L_2	B	C	D	E	0.531–0.67
L_3	C	D	E	F	0.671–0.85
L_4	D	E	F	F	0.851–1.00
	Irregular occasional use followed by long idle period	Regular use in intermittent operation	Regular use in continuous operation	Regular use in severe continuous operation	

NOTES:
(1) Load classes are as follows:
L_1 = Cranes that hoist the rated load occasionally and very light loads normally.
L_2 = Cranes that rarely hoist the rated load and normally hoist loads of about one-third of the rated load.
L_3 = Cranes that hoist the rated load fairly frequently and normally hoist loads between one-third and two-thirds of the rated load.
L_4 = Cranes that are regularly loaded close to the rated load.
(2) Load cycles are as follows:
N_1 = 20,000 to 200,000 cycles
N_2 = 200,000 to 600,000 cycles
N_3 = 600,000 to 2,000,000 cycles
N_4 = Over 2,000,000 cycles

example, a hoist motor designed to operate 15 min out of each hr of an 8-hr shift cannot handle 2 hours of steady run and 6 hr of idle time even though either distribution of work only requires 2 hr of operational time per 8-hr shift.

(d) Number of Starts and Stops. This directly affects all electromechanical devices, such as motors, contactors, brakes, and solenoids.

(e) Repetitive Long-Lowering Operations. Such operations generate heat in control braking means.

(f) Environmental Conditions. Such conditions include high ambient temperatures, dust, moisture, and corrosive fumes. Hoist equipment is designed to operate in ambient temperatures between 0° and 104°F and in atmospheres reasonably free from dust, moisture, and corrosive fumes, unless otherwise specified.

(g) Hazardous Locations. When hoists are used in hazardous locations, as defined by the National Electrical Code, ANSI/NFPA 70, or other special standards, modifications or additional precautions not covered by this Standard may be required. In these locations, only hoists designed in a manner suitable for the conditions encountered shall be used.

NUM-A-1220 Duty Classification. While all the factors listed in NUM-B-1210 must be considered in selecting the proper class of hoist, most applications, having randomly distributed loads or uniform loads up to 65% of rated load handled periodically throughout the work period, can be generalized according to the type of workshop or area of application. Listed under Hoist Duty Class of Table NUM-G-3200-2 are the five duty classes that have been established for electric wire rope hoists. Typical areas of application are listed in the table where each class can normally be applied.

The majority of hoist applications fall into one of the three categories, H1, H2, or H3, and the use of the generalized description in the table for selection of the hoist will be adequate.

(a) Operational Time Ratings. If in doubt as to the required duty classification for an application, refer to the data in Table NUM-G-3200-3 that show the operational time ratings for each class.

(1) Uniformly Distributed Work Periods

(a) Maximum on Time, Minutes Per Hour. The maximum running time in minutes per hour permitted for the duty class when hoist utilization is uniformly distributed over a given work period.

(b) Maximum Number of Starts Per Hour. The maximum number of motor starts per hour permitted for the duty class when hoist utilization is uniformly distributed over a given work period. For two speed motors, the total number of starts is the sum of the starts made at each motor speed.

(2) Infrequent Work Periods

(a) Maximum on Time From Cold Start in Minutes. The maximum total running time for hoist utiliza-

Copyright ASME International
Provided by IHS under license with ASME
No reproduction or networking permitted without license from IHS
Not for Resale

tion for the duty class starting with hoist at ambient temperature. These values cover infrequent periods of extended use and are applicable only with hoist at ambient temperature and cannot be repeated unless hoist is allowed to cool down to ambient temperature between periods.

(b) Maximum Number of Starts. The maximum total number of motor starts permitted for infrequent work periods specified in the table. For two speed motors, the total number of starts is the sum of the starts made at each motor speed.

(b) Mean Effective Load. Mean effective load denotes a theoretical single load value which has the same effect on the hoist as various loads actually applied to the hoist over a period of time.

K is the mean effective load factor and is expressed as:

$$K = \sqrt[3]{W_1^3 P_1 + W_2^3 P_2 + W_3^3 P_3 + \ldots + W_n^3 P_n}$$

where

K = mean effective load factor. Mean effective load factor is the ratio of the mean effective load to the rated load.

P = load probability. Load probability is the ratio of the running time under each load magnitude condition to the hoist total running time. The sum total of all load probabilities used in the above equation shall equal 1.0.

W = load magnitude. Load magnitude is the ratio of the hoist operating load to the hoist rated load. Operation with no load shall be included along with the weight of any dead load such as lifting attachments or devices.

(c) Randomly Distributed Loads. Randomly distributed implies that loads applied to the hoist are assumed to be evenly distributed within the rated load of the hoist in decreasing steps of 20% of the previous load value. Random loads, therefore, are considered as 100%, 80%, 64%, 51%, 41%, 33%, 26%, and so on, of the rated load.

Operation with random loads is considered on an equal time basis for the operating time remaining after accounting for the time the hoist is operating at no load and rated load. Randomly distributed loads will result in a mean effective load factor of 0.65.

NUM-A-1230 Application Analysis

NUM-A-1231 General

(a) If the operation consists of lowering loads over long distances of more than 50 ft, the mechanical load brake heat dissipation capability (overheating) may become a factor.

(b) Motor heating generated by the number of starts is not appreciably affected by the load on the hook and therefore the limits imposed in Table NUM-G-3200-3 are applicable for the motor regardless of the load being handled.

NUM-A-1232 Fundamental Application Analysis. It is not necessary to perform a detailed application analysis or calculate the mean effective load factor if all of the conditions listed below are met.

(a) The hoist is operating at no load during one-half of its operating time (load probability equals 0.5).

(b) The hoist is operating with rated load for a period of time not exceeding 20% of its operating time (load probability equal to or less than 0.2).

(c) Other loads applied to the hoist during the remainder of its operating time are randomly distributed.

Conditions in which the above operating criteria are met will result in a mean effective load factor of 0.65 or less. If any one of these conditions cannot be met or if a below-the-hook lifting device is attached to the load hook, a detailed application analysis using a calculated mean effective load factor should be conducted. Refer to NUM-A-1233.

See Appendix NUM-B, NUM-B-1000, for hoist class selection example.

NUM-A-1233 Detailed Application Analysis. The following general method may be used to make a detailed application analysis:

(a) Select a hoist class from Table NUM-G-3200-2 based on the general descriptions given in the applications section.

(b) Select a hoist with a rated load equal to or somewhat greater than the maximum load to be lifted.

(c) Using the information in the table, select the hoist speed that will meet the operational time ratings for the hoist duty class.

(d) Determine the value of K. If K is greater than 0.65, select a hoist of a higher rated load and recalculate K to make sure it is less than 0.65.

NUM-A-1300 AIR-OPERATED HOIST SERVICE CLASS

NUM-A-1310 General Conditions. Service conditions have an important influence on the performance of wearing parts of a hoist, such as gears, bearings, rope, sheaves, load chain, sprockets, brake linings, load and lift limit devices, wheels, and pneumatic components.

Copyright ASME International
Provided by IHS under license with ASME
No reproduction or networking permitted without license from IHS
Not for Resale

Careful consideration of the hoist duty service classifications described in this section will enable the user to evaluate the application and obtain a hoist designed for optimum performance and minimum maintenance. If doubt exists regarding hoist selection, the hoist manufacturer should be consulted. Many factors enter into the selection of the proper hoist to perform a given function. Hoisting equipment consists of both mechanical and pneumatic components, and both must be considered when analyzing the service the hoist must perform.

The factors that influence the performance of any hoist include the following:

(a) Load Distribution. This is the actual distribution or proportion of full and partial loads to be handled by the equipment, including lifting devices.

(b) Operational Time. Operational time is the total running time of the hoist per hour or per work period.

(c) Repetitive Long-Lowering Operations. Such operations generate heat in control braking means.

(d) Environmental Conditions. Examples include high or low ambient temperatures, dust, moisture, and corrosive fumes.

(e) Hazardous Locations. When hoists are used in hazardous locations, as defined by ANSI/NFPA 70 or other special standards, modifications or additional precautions not covered by this Standard may be required. In these locations, only hoists designed in a manner suitable for the conditions encountered shall be used.

NUM-A-1320 Duty Classification. While all the factors listed in NUM-B-1310 must be considered in selecting the proper class of hoist, most industrial applications can be generalized according to the percentage of rated load normally handled and the running time. Listed in Table NUM-G-3200-3 are the two duty classes that have been established for air wire rope and air-powered chain hoists. The majority of hoist applications will fall into the A4 category.

NUM-A-2000 SPEEDS (see NUM-G-3400)

(a) Suggested maximum operating speeds are listed in Tables NUM-A-2000-1A and NUM-A-2000-1B for hoists and Table NUM-A-2000-2 for crane bridges and trolleys. These Tables are consistent with speeds established by ASME HST-4M and ASME NOG-1.

(b) Suggested maximum jib rotation speed is 0.5 to 1.0 RPM.

Table NUM-A-2000-1A Recommended Electric Wire Rope Hoist Hoisting Speeds

Rated Load, tons	Hoist Duty Class and Hoist Speed, fpm		
	H1 and H2	H3	H4
0–2	10–15	12–30	25–50
3–5	10–15	12–30	20–40
6–7.5	10–15	12–25	15–30
8–10	7–10	10–20	15–30
11–15	7–10	10–15	10–20
16–20	5–10	10–15	10–15
21–30	5–10	8–15	10–15
31–40	4–8	6–12	6–12
41–50	4–8	5–10	5–10

GENERAL NOTES:
(a) For class H5 units, speeds can only be determined after the quantity of material to be handled and the time allotted to complete the work have been established.
(b) For trolleys of an I-beam hoist unit, recommended trolley speeds are given under Table NUM-B-2000-2, where hoist classes H1, H2, H3, H4, and H5 are basically equivalent to the crane and monorail classes A, B, C, D, and E.

Table NUM-A-2000-1B Recommended Air Hoist Hoisting Speeds

Capacity	Wire Rope	Chain
1–2 tons	20 FPM	19 FPM
3–5 tons	18 FPM	10 FPM
7.5–10 tons	18 FPM	5 FPM
15–20 tons	10 FPM	4 FPM

Table NUM-A-2000-2 Recommended Crane Bridge and Trolley Speeds

Rated Load, tons	Bridge and Trolley Speed, fpm		
	Classes A and B	Class C	Class D
0–10	30–90	40–125	100–150
11–20	25–75	40–100	100–150
21–50	20–50	25–75	40–100

GENERAL NOTE: For class E units, speeds can only be determined after the quantity of material to be handled and the time allotted to complete the work have been established.

NUM-A-3000 COATINGS AND FINISHES (see NUM-G-4230)

NUM-A-3100 SURFACE CONSIDERATIONS

NUM-A-3110 Profiles. When preparing surfaces for coating with inorganic zinc systems, an important

Copyright ASME International
Provided by IHS under license with ASME
No reproduction or networking permitted without license from IHS
Not for Resale

consideration for proper adhesion is the number of peaks per unit area of surface. The required 5% inclusion of grit, when shot blasting, is established to provide the desired degree of roughness for these systems. Higher or lower percentage inclusions of grit may be necessary depending on numerous conditions, such as the age of the working mix at a given facility. Lower levels will require the Purchaser's approval. This approval may be obtained by a review of a sample of the mixture to be used and/or a sample panel prepared per the crane specification requirements with the intended mixture.

NUM-A-3120 Moisture. Figure NUM-A-3120-1 may be used as a quick reference guide to establish when the ambient conditions will allow painting or surface preparation. Better determination can be made using more precise hygromatic charts for the exact conditions at any specific time.

NUM-A-3200 FILLERS

To minimize rust staining and similar types of problems, small spaces between abutting parts may be filled using a qualified filler compatible with the coating system and acceptable to the coating manufacturer. Seal welding may also be used for this condition where permitted by the design of adjacent structural welds.

NUM-A-3300 DEVIATIONS AND CORRECTIONS

NUM-A-3310 General Requirements. Corrections of deviations are not intended to be limited to the following. Alternative methods of correction may be used where accepted by the coating manufacturer and the purchaser.

(a) Any deviations in the coating system or surface preparation may be corrected by repreparation and recoating of the entire piece or component in accordance with the original requirements.

(b) Brush or roller application may be used in limited areas of repair, provided the method is compatible with the coating system.

(c) Areas damaged during shipment or erection may be corrected by the purchaser in accordance with these methods.

NUM-A-3320 Correction of Deviations in Blasted Surfaces

(a) Surface imperfections detected during or after the coating process, such as weld flaws, delaminations, scabs, and slivers, shall be corrected with methods approved by the manufacturer's design engineer.

(b) Gouges in surfaces may be repaired by the use of appropriately qualified caulking compounds with the approval of the manufacturer's design engineer. Gouges shall not be filled using these compounds if the area is to be overcoated with inorganic zinc. These areas may be filled after application and curing of the inorganic zinc systems where the two materials are compatible.

NUM-A-3330 Correction of Deviations in Coating During Coating Application

(a) Runs and sags may be corrected during coating application by either brushing out the excess material to give a smooth film within the required thickness range or by brushing out and reapplying additional coating within the specified film thickness range.

(b) Areas not receiving the necessary wet film thickness may be immediately recoated before flash drying occurs. For inorganic zinc systems, if flash drying has occurred, the area to be recoated shall be cured and then sweep-blasted before applying additional coating. If recoating of the system is delayed beyond the maximum allowed recoat time established by the coating manufacturer, the coating manufacturer shall be contacted to determine an acceptable recoat procedure.

(c) For other than inorganic zinc systems, recoating can be performed any time after the time interval indicated by the coating manufacturer. If an extended period of delay occurs prior to recoating, the surfaces shall be cleaned of dirt, oils, grease, dust, and other contaminants by sweeping, brushing, wiping, using pressurized air, scraping, solvent cleaning, steam cleaning, or any combination of these similar methods as appropriate for the contaminants involved.

NUM-A-3340 Corrections of Deviations in Coating After Curing

(a) Overspray may be removed by sanding, wire screening, or other appropriate means.

(b) Discontinuities detected in other than inorganic zinc coatings may be corrected by light sanding, removal of all dust and chalk, and solvent wiping. Where not detrimental to the coating being used, additional coating material may then be applied by brush and worked to fill discontinuities.

(c) Gouges or scratches (including areas damaged due to the use of certain destructive inspection instruments) may be repaired by using a compatible filler or patching compound and sanded smooth when necessary. Before application of the filler, all loose coating shall

Copyright ASME International
Provided by IHS under license with ASME
No reproduction or networking permitted without license from IHS
Not for Resale

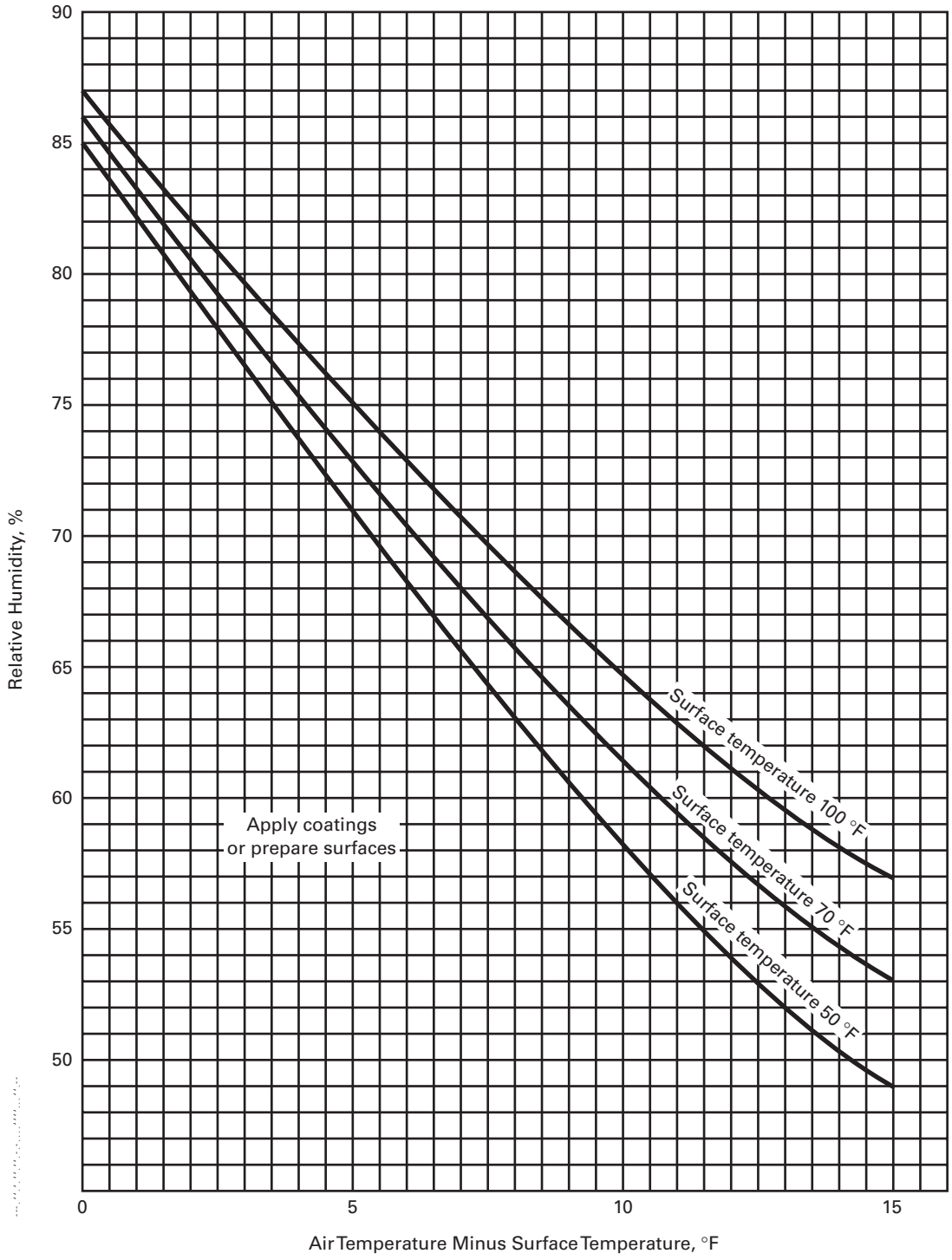

Fig. NUM-A-3120-1 Ambient Conditions Chart

Copyright ASME International
Provided by IHS under license with ASME
No reproduction or networking permitted without license from IHS
Not for Resale

be removed and the area feathered a minimum of 2 in. onto the film coating.

(d) Runs and sags not repaired while coating is wet may be removed by sanding or grinding. If occurring in the prime coat and upon removal the necessary minimum film thickness is maintained, recoating of additional primer is not required. Where additional coating is required, full-bodied or thinned coats may be applied in accordance with the requirements of the coating manufacturer. The application of a thinned coat may be used to improve the appearance of repaired areas.

(e) Localized blisterings may be corrected by power sanding or grinding to firm coating or substrate. After grinding, a needle gun should be used to roughen the surface. Edges shall be feathered a minimum of 2 in. onto the firm coat. All dust and chalk shall be removed, and, where not detrimental to the coating, the area shall be solvent wiped. The area may then be recoated by an appropriate method.

(f) Film thickness below the specified minimum may be corrected as indicated in NUM-A-3330 or by removal of all material back to bare substrate and repreparation and application in accordance with the original requirements.

(g) Localized areas with film thickness above the specified maximum may be reduced by sanding or grinding. For inorganic zinc systems, wire screening down to the required thickness may be done if the coating is acceptable, except for the excess thickness. An example of this would be the case of an inorganic zinc coating that exhibits no mud cracking but exceeds the required film thickness. If the excess film thickness is considered by the coating manufacturer and the purchaser to not be detrimental to the integrity of the system, the system may be accepted with the excess film thickness at the discretion of the purchaser. If the excess film thickness is considered by the coating manufacturer and the purchaser to be detrimental to the integrity of the system, the system shall be removed to a previously acceptable film or to base metal as recommended by the coating manufacturer.

NUM-A-4000 HOIST HAND CHAINS (see NUM-III-7341)

Typical hoist hand-chain pull and overhaul characteristics are provided in Table NUM-A-4000-1.

NUM-A-5000 UNDERRUNNING TROLLEY APPLICATIONS (see NUM-III-7700)

NUM-A-5100 PLAIN (PUSH) TYPE

Plain-type trolleys are commonly used where trolley motion is infrequent and/or relatively short. Plain-type trolleys should be limited to a maximum capacity of 3 tons and where the rail elevation is not more than 20 ft above the operator's floor level.

NUM-A-5200 HAND-CHAIN OPERATED

Hand-chain-operated trolleys are commonly used where trolley motion is infrequent, relatively short, where precise positioning is required, and for capacities and rail heights where a plain-type trolley would not be practical.

NUM-A-5300 MOTOR OPERATED

Motor-operated trolleys are commonly used where the frequency or distance of travel or type of load to be handled would constitute an unnecessary burden or hazard to the operator.

NUM-A-6000 DOCUMENTATION (See NUM-G-5000)

For Type I equipment, documentation in accordance with NUM-A-6100, NUM-A-6200, and NUM-A-6300 is recommended. For Type II equipment, the documentation specified for Type II in NUM-G-5200 and the material test reports and other documentation specified in NUM-II-8500 and NUM-III-8500 should be provided as a minimum. For Type III equipment, the documentation specified for Type III in NUM-G-5200 and the material test reports and other documentation specified in NUM-III-8500 should be provided as a minimum. For Type II and Type III it is suggested that additional documentation from NUM-A-6000 be considered by the owner.

NUM-A-6100 Manufacturer

The manufacturer should establish a system for the collection and temporary storage of records received and generated during the design, manufacture, and shipment of the equipment, and make subsequent submittal of these records to the owner or owner's designated representative.

Copyright ASME International
Provided by IHS under license with ASME
No reproduction or networking permitted without license from IHS
Not for Resale

Table NUM-A-4000-1 Typical Hoist Hand-Chain Pull and Overhaul Characteristics

Rated Load, tons [Note (1)]	Hand-Chain Pull Force [Note (2)]		Hand-Chain Overhaul to Lift Load One Foot [Note (3)]	
	Separate From Trolley, lb	Integral With Trolley, lb	Separate From Trolley, ft	Integral With Trolley, ft
0.25	15–50	15–25	10–50	25–25
0.50	20–65	25–50	15–60	20–60
1	45–85	45–70	25–60	30–55
1.50	40–105	40–80	35–90	40–85
2	55–115	55–95	40–80	50–85
3	40–110	40–85	65–180	60–175
4	55–140	55–95	70–180	100–175
5	45–105	50–80	125–260	155–250
6	55–140	60–95	125–260	155–250
8	45–165	45–90	130–500	220–500
10	55–135	55–100	210–500	255–500
12	60–175	65–105	105–500	175–500
16	70–180	65–95	230–710	230–710
20	70–190	80–90	290–770	290–760
24	100–205	100–110	350–770	350–760
25	90–165	. . .	345–420	. . .
30	90–120	. . .	380–510	. . .
40	85–135	. . .	460–770	. . .
50	110–135	. . .	460–770	. . .

GENERAL NOTE: This Table indicates the characteristics of hoists generally available. Those values including a dash (e.g., 15–50) denote typical ranges.

NOTES:
(1) Tons of 2,000 lb.
(2) Standard lifts are 8 ft, 0 in. Weights predicated on standard lifts. Other lifts are available. Corresponding hand-chain drop is normally 2 ft, 0 in. less than the reach.
(3) Values refer to each hand chain where two or more hand chains are required.

NUM-A-6110 Records Submitted to the Owner During Design and Manufacture. The following Quality Assurance Records (where applicable) should be submitted to the owner or his designated representative. Additional requirements may be included in the equipment procurement documents:

(a) assembly and outline drawings;

(b) electrical schematics and wiring diagrams;

(c) system calculations (mechanical, electrical, structural);

(d) supplier deviation requests;

(e) load summary report(s);

(f) acceptance test plans and procedures;

(g) software test plans for controls;

(h) control logic diagrams; and

(i) welding procedures and welder certificates.

NUM-A-6120 Records Submitted Upon Completion. The following Quality Assurance Records (where applicable) should be submitted to the owner or his designated representative. Additional requirements may be included in the equipment procurement documents:

(a) material test reports per Tables NUM-I-8521-1A and NUM-I-8521-1B;

(b) NDE reports per Tables NUM-I-8521-1A and NUM-I-8521-1B;

(c) radiographic film per Tables NUM-I-8521-1A and NUM-I-8521-1B;

(d) wire rope breaking strength report(s) for hoisting rope(s);

(e) breaking strength report(s) for hoist load chain(s);

(f) hook load test reports;

Copyright ASME International
Provided by IHS under license with ASME
No reproduction or networking permitted without license from IHS
Not for Resale

(g) shop no-load test report for crane or hoist;
(h) approved supplier deviation requests;
(i) certificates of Conformance per Tables NUM-I-8521-1A and NUM-I-8521-1B;
(j) operating instructions outlining the step-by-step procedures for system start-up, operation, and shutdown. Instructions should include a brief description of all equipment and its basic operating features and control philosophy;
(k) maintenance instructions listing procedures, possible breakdowns, repairs, and troubleshooting guide;
(l) NEMA routine test reports for hoist motors;
(m) as-built drawings, including a complete list of equipment and material;
(n) training manuals (both operations and maintenance);
(o) recommended spare parts list;
(p) weld filler material Certificates of Conformance, including heat or lot numbers;
(q) records of high-strength bolt torquing;
(r) hardcopy and disk copy of installed Programmable Logic Controller (PLC) software program(s); and
(s) fastener material for structual connection material test reports.

NUM-A-6200 Intermediate Storage

Those responsible for the storage of the equipment should establish a system for the collection, storage, and submittal of Quality Assurance Records to the owner in accordance with NQA-1.

NUM-A-6300 Constructor/Erector

Those responsible for the construction/erection of the equipment should establish a system for the collection, storage, and submittal of Quality Assurance Records. The following records, as applicable, should be submitted to the owner or the owner's designated representative:

(a) records of high-strength bolt torquing;
(b) NDE reports and procedures;
(c) weld repair procedures and results;
(d) weld fit-up reports;
(e) weld location diagrams;
(f) welding procedures;
(g) welding procedure qualification;
(h) welding filler material reports, including heat and lot numbers;
(i) welding material control procedures;
(j) welder qualifications;
(k) data sheets or logs on equipment installation, inspection, and alignment;
(l) erection procedures
(m) lubrication records;
(n) documentation of testing performed after installation and prior to equipment acceptance;
(o) results of end-to-end electrical tests;
(p) instrument calibration results, including test equipment;
(q) as-built drawings approved by owner;
(r) field audit reports;
(s) field quality assurance manuals and daily reports;
(t) final inspection reports;
(u) nonconformance reports;
(v) final system adjustment data;
(w) acceptance test procedures and results; and
(x) load test.

Copyright ASME International
Provided by IHS under license with ASME
No reproduction or networking permitted without license from IHS Not for Resale

NONMANDATORY APPENDIX B

NUM-B-1000 HOIST CLASS SELECTION EXAMPLES (see NUM-G-3000)

Example No. 1

Application: Hoist to be used for machine shop work, to operate no more than 10% of the time with no more than 50 starts/hr and with randomly distributed loads. No unusually heavy work periods are expected.

Selection: Review of Table NUM-G-3200-2 shows that hoist utilization does not exceed that specified for Class H2. Class H2 can be specified with no further analysis needed.

Example No. 2

Application: Same as Example No. 1 except that the hoist is to be used periodically to unload a truck. It is estimated that it will take up to 1 hr to unload the truck, with the hoist running 50% of that time.

Selection: The normal utilization still falls within the Class H2 rating. However, the periodic unloading of the truck would require the necessity of specifying Class H3.

Example No. 3

Application: A foundry hoist is to be used to handle raw castings for storage. Two basic sizes of castings will be handled, one weighing 1,500 lb and the other 7,500 lb. A 10,000-lb hoist is being considered. It is estimated that it will take 15 min of running time per hr to handle the duty cycle and that out of the 15 min, the hoist will be operating 50% of the time with 7,500 lb on the hook, 25% with 1,500 lb, and 25% with no load, with a maximum of 150 starts/hr.

Selection: The load distribution cannot be defined as randomly distributed. Therefore, choosing a hoist directly from the Tables could lead to incorrect selection, following the procedure outlined in para. NUM-A-1200. Tentatively select a Class H3 hoist, based on the 15-min utilization time.

$$K = \left\{\left[\left(\frac{7500}{10000}\right)^3 \times 0.5\right] + \left[\left(\frac{1500}{10000}\right)^3 \times 0.25\right] + \left[\left(\frac{0}{10000}\right)^3 \times 0.25\right]\right\}^{1/3}$$

where

$K = 0.6$

K is less than 0.65. A Class H3 hoist rated 5 tons would therefore be adequate to meet the requirements of the application.

Example No. 4

Application: Basically the same as Example No. 3 except that the user has decided to purchase a 4-ton hoist.

Selection: Following the same procedure as in Example No. 3

$$K = \left\{\left[\left(\frac{7500}{8000}\right)^3 \times 0.5\right] + \left[\left(\frac{1500}{8000}\right)^3 \times 0.25\right] + \left[\left(\frac{0}{8000}\right)^3 \times 0.25\right]\right\}^{1/3}$$

where

$K = 0.75$

K is in excess of 0.65 and the selection is incorrect. The selection of the Class H3 hoist rated 5 tons, as in Example No. 3, is correct.

Example No. 5

Application: An electric wire-rope or chain hoist is to be used for dipping racks of parts into a series of tanks. The total lift distance is 6 ft. The operation is repeti-

Copyright ASME International
Provided by IHS under license with ASME
No reproduction or networking permitted without license from IHS
Not for Resale

Table NUM-B-1000-1 Example of Detailed Analysis Worksheet

Tas	Load *L*, lb	Load Magnitude $W = L/C$	Lift *D*, ft	No. of Lifts per hr, *N*	Time $T = (N \times 2 \times D)/V$	Probability $P = T/R$

tive requiring 70 lift–lower cycles/hr. The total load is 1,000 lb including racks. An empty rack weighs 160 lb. The hoist is operating 90% of the time with 1,000 lb and 10% of the time with 160 lb.

Selection: A 1-ton hoist has been selected.

$$K = \left\{\left[\left(\frac{1000}{2000}\right)^3 \times 0.9\right] + \left[\left(\frac{160}{2000}\right)^3 \times 0.1\right]\right\}^{1/3}$$

where

$K = 0.48$

K is less than 0.65. Selection of the 1-ton hoist was correct. Total lifting and lowering distance/hr = 6 ft × 2 × 70 = 840 ft/hr. A hook speed of 30 ft/min is selected. The resulting ON time per hour is:

$$\frac{840 \text{ ft/hr}}{30 \text{ ft/min}} = 28 \text{ min/hr}$$

and requires a Class H4 hoist.

The user estimated that 4 starts are required per lift–lower cycle resulting in 280 starts/hr, also requiring a Class H4 hoist.

Note that the selection of a 60 ft/min hook speed would result in a 14 min/hr ON time, but the hoist would still have to be Class H4 because of the 280 motor starts/hr.

For the above examples, see Table NUM-B-1000-1, Example of Detailed Analysis Worksheet, as well as the equations below.

Total running time

$$R = \Sigma T$$

Maximum number of starts/hr

$$S = 2 \times \Sigma N$$

$$K = (W^3{}_1P_1 + W^3{}_2P_2 + W^3{}_3P_3 + \ldots + W^3{}_nP_n)^{1/3}$$

(If $K > 0.65$, pick a hoist with higher capacity C and recalculate.)

where

task = the load to be lifted

C = the rated load of the hoist

D = the distance the load is to be lifted, ft

L = the load to be lifted, lb

N = the number of lifts/hr

$P = T/R$ = load probability

Load probability is the ratio of running time under each load magnitude condition to the hoist total running time. The sum total of all load probabilities used in the above equation must equal 1.0.

R = total hoist running time, minutes, for all tasks

T = the running time of the hoist for each task = $(N \times 2 \times D)/V$

V = hoist speed, ft/min

W = load magnitude

Load magnitude is the ratio of the hoist operating load to the hoist rated load. Operation with no load must be included along with the weight of any dead load such as lifting attachments or devices.

Copyright ASME International
Provided by IHS under license with ASME
No reproduction or networking permitted without license from IHS
Not for Resale

NUM-B-2000 JIB SLEW DRIVE SAMPLE CALCULATION (see NUM-III-5422)

The following examples illustrate determination of horsepower for slew drive motor for indoor and outdoor jib cranes.

Assumed example values:

E = 0.9
I = moment of inertia of load = $WL \times RL^2$ = $(22{,}000)(10)^2 = 22 \times 10^5$ lb/ft^2
N = 1.5 rpm
HB = 1.5 ft
HL = 5 ft
LB = 12 ft, boom length
LL = 5 ft
RB = 6 ft, the radius to centroid of projected area of the boom
RL = 10 ft, maximum load radius
WL = 22,000 lb (10-ton rated load plus 2,000-lb hoist weight)
PSF = 5 lb/ft^2
K_t = 1.3

Formulas and Calculations:
indoor crane

$$\text{Required } HP = \frac{I\,N^3}{7 \times 10^6 E K_t} = \frac{22 \times 10^5 (1.5)^3}{7 \times 10^6 (0.9)(1.3)} = 0.91\ HP$$

outdoor crane

$$\text{Total Required Horsepower} = HP + HP_{wind}$$

$$HP_{wind} = \frac{PSF\ [(A_{boom})(RB) + (A_{load})(RL)]\ N}{5250 E K_t}$$

$$(A_{boom} \times RB) + (A_{load} \times RL) = (LB \times HB \times RB) + (LL \times HL \times RL) = (12 \times 1.5 \times 6) + (5 \times 5 \times 10) = 358$$

$$HP_{wind} = \frac{1.5 \times 358 \times 5}{5250 \times 0.9 \times 1.3} = 0.44\ HP$$

HP (from indoor crane calculation) = 0.91 HP

Total required motor horsepower = 0.91 + 0.44 = 1.35 HP

NUM-B-3000 DERIVATION OF SIMPLIFIED HORSEPOWER FORMULA (see NUM-III-5422)

For rotary motion:

$$HP = \frac{TN}{5250 E K_t}$$

where

E = system efficiency
N = rotational speed, rpm
T = torque, ft-lb
HP = horsepower
K_t = torque factor (see Table NUM-III-8422.5-5)

Also for rotary motion:

$$T = I_T \alpha$$

where

I_T = total mass moment of inertia of all rotating components
α = radial acceleration, radians/sec^2

For a load, W, located at a radius, RL, the moment of inertia of the load, I, is expressed as follows:

$$I = mr^2 = \frac{W}{g}(RL)^2 \text{ ft-lb/sec}^2$$

For a boom fabricated from a uniform beam, the moment of inertia of the boom, I_B, with length, LB, and weight, W_1, is expressed as follows:

$$I_B = \tfrac{1}{3} mr^2 = \frac{W_1 (LB)^2}{3g} \text{ ft-lb/sec}^2$$

Assuming the boom weight equals 75% of the load and the load is moved to its maximum radius, then the ratio of I_B / I is expressed as follows:

$$\frac{I_B}{I} = \frac{\dfrac{(0.75) W (LB)^2}{3g}}{\dfrac{W}{g}(LB)^2} = 0.25$$

Copyright ASME International
Provided by IHS under license with ASME
No reproduction or networking permitted without license from IHS
Not for Resale

where

I = moment of inertia of load
g = acceleration of gravity
I_B = moment of inertia of boom

For a drive train with a motor of moment of inertia, I_m, and an overall gear ratio, G:

$$I_D = I_m G^2$$

where I_D is the drive train moment of inertia about the final reduction in the gear train and:

$$I_m = \frac{WK^2}{g}$$

Example

A 6-ton jib crane has a boom length of 38 ft, a drive train overall ratio of 2400:1, and a motor WK^2 of 0.2 lb/ft^2.

$$\frac{I_D}{I} = \frac{\frac{0.2}{g}(2400)^2}{\frac{12000}{g}(38)^2} = 0.066$$

A conservative ratio of $I_D / I = 0.1$ can be used. The moment of inertia of the total system is then:

$$I_T = I + I_B + I_D = I + 0.25I + 0.1I$$

$$I_T = 1.35I = 1.35\,\frac{W}{g}\,(RL)^2$$

Assume the jib crane must reach full speed in 20 deg of rotation.

$$\theta = \tfrac{1}{2}\alpha t^2$$

where

t = time, sec
θ = angle of rotation, radians
α = angular acceleration, radians/sec^2

$$\alpha = \frac{\omega^2 - \omega_0^2}{2\theta}$$

where

ω = angular velocity, radians/sec
ω_0 = initial angular velocity = 0

$$\theta = \tfrac{1}{2}\left(\frac{\omega^2}{2\theta}\right)t^2$$

$$t^2 = \frac{4\theta^2}{\omega^2}$$

therefore

$$t = \frac{2\theta}{\omega}$$

If ω is given as N = rpm and θ = 20 deg, then:

$$t = \frac{2(20)\left(\frac{\pi}{180}\right)}{N\left(\frac{2\pi}{60}\right)} = \frac{6.67}{N} \text{ seconds}$$

from

$$T = I_{T\alpha}$$

$$\omega = \alpha t$$

where

t = time, sec
ω = angular velocity, radians/sec
α = angular acceleration, radians/sec^2

then

$$T = \frac{I_T \omega}{t} = \frac{I_T\,(N)\left(\frac{2\pi}{60}\right)}{t}$$

$$t = \frac{6.67}{N} \text{ and } I_T = 1.35\,\frac{W}{g}\,(RL)^2$$

therefore

Copyright ASME International
Provided by IHS under license with ASME
No reproduction or networking permitted without license from IHS
Not for Resale

$$T = \frac{1.35\left(\frac{W}{g}\right)(RL)^2\left(\frac{2\pi}{60}\right)(N)}{\frac{6.67}{N}};\ g = 32.2$$

$$T = \frac{W(RL)^2(N^2)}{1519}$$

$$HP = \frac{TN}{5250EK_t} = \frac{W(RL)^2(N^3)}{5250(1519)EK_t}$$

conservatively rounding downward

$$HP = \frac{W(RL)^2N^3}{7 \times 10^6 EK_t}$$

NUM-B-4000 LOWER FLANGE BENDING CALCULATION (see NUM-III-8232.3)

Example

Calculation for local bending of lower flanges due to wheel loads (see Fig. NUM-B-4000-1). Span 37 ft 6 in., crane capacity 5 ton with a maximum static trolley load (*TL* + *LL*) of 11.04 kips. Girder S18 × 54.7 with C15 × 33.9 cap. Bridge and trolley speed is 100 ft/min. Assume A-36 steel.

(a) Check for Case 2 loading (see para. NUM-III-8213; bridge speed ≤ 200 fpm). Assume the following:

(1) $DLF_B = 1.1$ [see para. NUM-III-8212.1(d)(1)]
(2) $DLF_T = 1.1$, trolley speed ≤ 200 fpm
(3) $HLF = 0.15$ [see para. NUM-III-8212.1(d)(2)]
(4) *IFD* and *SK* are negligible and ignored
(5) $WLO = 0$, indoor crane

$$DL(DLF_B) = [(54.7 + 33.9)37.5]1.1 = 3.65 \text{ kips}$$

$$TL(DLF_T) = (1.04)1.1 = 1.14 \text{ kips}$$

$$LL(1 + HLF) = (10.00)(1 + 0.15) = 11.50 \text{ kips}$$

Consider Load Case 2

$$DL(DLF_B) + TL(DLF_T) + LL(1 + HLF) + IFD + WLO + SK$$

$$M_{vertical} = (3.65)\frac{37.5}{8} + (1.14 + 11.5)\frac{37.5}{4} = 135.61 \text{ kip/ft}$$

IFD and *WLO* are ignored in this condition.

$$\sigma_{Flange(ten)} = \frac{(135.61)12}{103.2} = 15.76 \text{ ksi}$$

$$\sigma_{Flange(comp)} = \frac{(135.61)12}{207.7} = 7.83 \text{ ksi}$$

$$T_{xy(in\ web)} = \frac{\frac{1}{2}(3.65 + 1.14 + 11.5)}{(0.461)(6.10 + 12.30 - 0.40 - 1.38)} = \frac{8.145}{7.66} = 1.06 \text{ ksi}$$

(b) Compute coefficients and stress girder section properties.

$$I_{xx} = 1269$$

$$I_{yy} = 335.8 \text{ in.}^4$$

$$S_{xx(ten)} = 103.2 \text{ in.}^3$$

$$S_{yy(ten\ -\ comp)} = 44.7 \text{ in.}^3$$

$$S_{xx(comp)} = 207.7 \text{ in.}^3$$

$$A = 26.06 \text{ in.}^2$$

$$t_w = 0.461 \text{ in.}$$

Copyright ASME International
Provided by IHS under license with ASME
No reproduction or networking permitted without license from IHS
Not for Resale

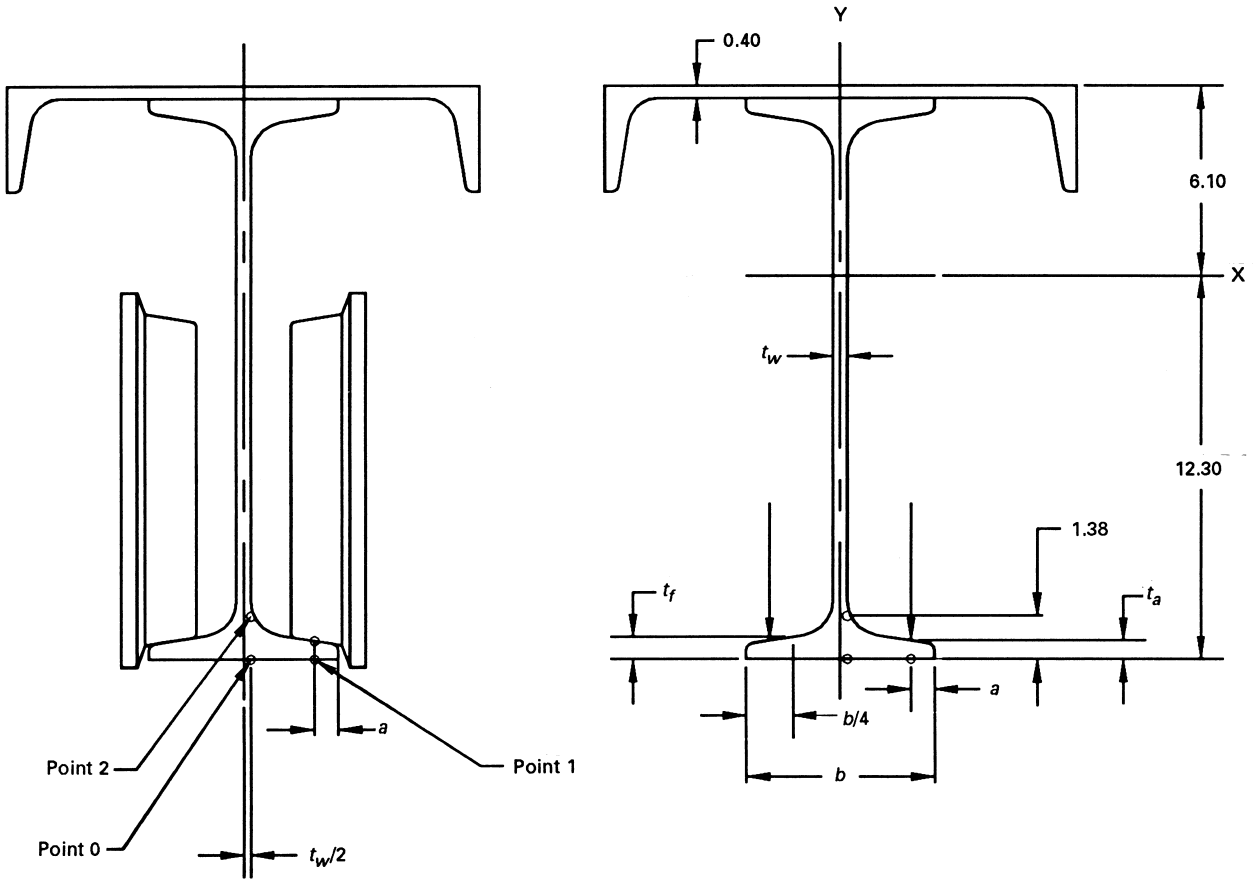

Fig. NUM-B-4000-1 Lower Flange Bending

$$P = \frac{12.70}{4} = 3.175^k$$

assume four wheels

$$t_f = 0.691 \text{ in., } b = 6.00 \text{ in.}$$

$$a = 0.75 \text{ in.}$$

$$t_a = 0.691 - \left(\frac{6}{24}\right) + \left(\frac{0.75}{6}\right) = 0.566 \text{ in.}$$

for single-web symmetrical section

$$\lambda = \frac{2a}{b - t_w} = \frac{(2)(0.75)}{6 - 0.461} = 0.271 \text{ in.}$$

coefficients (for tapered flange sections)

$$C_{x0} = -1.096 + 1.095(0.271) + 0.192e^{-6.0(0.271)}$$
$$C_{x0} = -0.762$$

$$C_{x1} = 3.965 - 4.835(0.271) - 3.965e^{-2.675(0.271)}$$
$$C_{x1} = 0.734$$

$$C_{y0} = -0.981 - 1.479(0.271) + 1.120e^{1.322(0.271)}$$
$$C_{y0} = 0.221$$

$$C_{y1} = 1.810 - 1.150(0.271) + 1.060e^{-7.70(0.271)}$$
$$C_{y1} = 1.63$$

lateral (x) and longitudinal (y) flange bending stress (Pt 0 and Pt 1)

Copyright ASME International
Provided by IHS under license with ASME
No reproduction or networking permitted without license from IHS
Not for Resale

$$\sigma_{xo} = C_{xo}\frac{P}{(t_a)^2} = -0.762\left(\frac{3.175}{0.567^2}\right) = -7.53 \text{ ksi}$$

where

$$\frac{P}{(t_a)^2} = \frac{3.16}{0.566^2} = 9.86$$

$$\sigma_{x1} = C_{x1}\frac{P}{(t_a)^2} = 0.734(9.86) = 7.24 \text{ ksi}$$

$$\sigma_{x2} = -\sigma_{x0} = 7.52 \text{ ksi}$$

$$\sigma_{y0} = C_{y0}\frac{P}{(t_a)^2} = 0.221(9.86) = 2.18 \text{ ksi}$$

$$\sigma_{y}1 = C_{y1}\frac{P}{(t_a)^2} = 1.622(9.86) = 16.00 \text{ ksi}$$

$$\sigma_{y2} = -\sigma_{y0} = -2.18 \text{ ksi}$$

(c) Reduce flange bending stresses to 75% and combine with Case 2 loading [see para. NUM-III-8232.3(b)].

Point 0:

$$\sigma_y = \sigma_{long} + 0.75\ \sigma_{y0}$$
$$\sigma_y = 15.76 + 0.75(2.18) = 17.40 \text{ ksi}$$

$$\sigma_x = \sigma_{lat} + 0.75\ \sigma_{x0}$$
$$\sigma_x = 0 + 0.75(-7.52) = -5.64 \text{ ksi}$$

$$\tau_{xy} = 0 \text{ ksi}$$

Point 1:

$$\sigma_y = \sigma_{long} + 0.75\ \sigma_{y1}$$
$$\sigma_y = 15.76 + 0.75(16.00) = 27.76 \text{ ksi}$$

$$\sigma_x = \sigma_{lat} + 0.75\ \sigma_{x1}$$

$$\sigma_x = 0 + 0.75(7.24) = 5.43 \text{ ksi}$$

$$\tau_{xy} = 0 \text{ ksi}$$

Point 2:

$$\sigma_y = \sigma_{long} + 0.75\ \sigma_{y2}$$
$$\sigma_y = \frac{(12.31 - 1.38)15.76}{12.31} + 0.75(-2.18) = 13.31 \text{ ksi}$$

$$\sigma_x = \sigma_{lat} + 0.75\ \sigma_{x2} = 0 + 0.75(7.52) = 5.64 \text{ ksi}$$

$$\tau_{xy} = 1.06 \text{ ksi}$$

(d) Combine stresses [see para. NUM-III-8232.3(f)].

$$\sigma_t = \sqrt{(\sigma_x)^2 + (\sigma_y)^2 - \sigma_x\sigma_y + 3(T_{xy})^2} < \sigma \text{ allowable}$$

$$\sigma_{allow} \text{ (for Case 2)} = 0.66\ \sigma_y = 0.66(36) = 23.76 \text{ ksi}$$

where
σ_y for A-36 steel = 36 kips

Point 0:

$$\sigma_t = \sqrt{(-5.64)^2 + (17.40)^2 - (-5.64)(17.40) + 3(0.24)^2}$$
$$\sigma_t = 20.80 \text{ ksi} \le 23.76 \text{ ksi (okay)}$$

Point 1:

$$\sigma_t = \sqrt{(5.43)^2 + (27.76)^2 - (5.43)(27.76)}$$
$$\sigma_t = 25.48 \text{ ksi} > 23.76 \text{ ksi (not good)}$$

Point 2:

$$\sigma_t = \sqrt{(5.64)^2 + (12.36)^2 - (5.64)(12.36) + 3(1.06)^2}$$
$$\sigma_t = 10.71 \text{ ksi} < 23.76 \text{ ksi (okay)}$$

Conclusion

The beam section is not good. Either add a plate underneath the bottom flange or use a beam with a larger section modulus.

Copyright ASME International
Provided by IHS under license with ASME
No reproduction or networking permitted without license from IHS
Not for Resale

ASME NUM-1–2004

ISBN 0-7918-2938-3





J14304

--`,,```,,,,````-`-`,,`,,`,`,,`---

Copyright ASME International
Provided by IHS under license with ASME
No reproduction or networking permitted without license from IHS

Not for Resale