ASME MFC-8M–2001

FLUID FLOW IN CLOSED CONDUITS: CONNECTIONS FOR PRESSURE SIGNAL TRANSMISSIONS BETWEEN PRIMARY AND SECONDARY DEVICES

AN AMERICAN NATIONAL STANDARD



The American Society of Mechanical Engineers

Copyright ASME International
Provided by IHS under license with ASME
No reproduction or networking permitted without license from IHS

Not for Resale

The American Society of Mechanical Engineers

AN AMERICAN NATIONAL STANDARD

FLUID FLOW IN CLOSED CONDUITS: CONNECTIONS FOR PRESSURE SIGNAL TRANSMISSIONS BETWEEN PRIMARY AND SECONDARY DEVICES

ASME MFC-8M–2001

Copyright ASME International
Provided by IHS under license with ASME
No reproduction or networking permitted without license from IHS

Not for Resale

Date of Issuance: September 11, 2001

This Standard will be revised when the Society approves the issuance of a new edition. There will be no addenda issued to this edition.

ASME will issue written replies to inquiries concerning interpretations of technical aspects of this Standard.

ASME is the registered trademark of The American Society of Mechanical Engineers.

This code or standard was developed under procedures accredited as meeting the criteria for American National Standards. The Standards Committee that approved the code or standard was balanced to assure that individuals from competent and concerned interests have had an opportunity to participate. The proposed code or standard was made available for public review and comment that provides an opportunity for additional public input from industry, academia, regulatory agencies, and the public-at-large.

ASME does not "approve," "rate," or "endorse" any item, construction, proprietary device, or activity.

ASME does not take any position with respect to the validity of any patent rights asserted in connection with any items mentioned in this document, and does not undertake to insure anyone utilizing a standard against liability for infringement of any applicable letters patent, nor assume any such liability. Users of a code or standard are expressly advised that determination of the validity of any such patent rights, and the risk of infringement of such rights, is entirely their own responsibility.

Participation by federal agency representative(s) or person(s) affiliated with industry is not to be interpreted as government or industry endorsement of this code or standard.

ASME accepts responsibility for only those interpretations of this document issued in accordance with the established ASME procedures and policies, which precludes the issuance of interpretations by individuals.

No part of this document may be reproduced in any form,
in an electronic retrieval system or otherwise,
without the prior written permission of the publisher.

The American Society of Mechanical Engineers
Three Park Avenue, New York, NY 10016-5990

Copyright © 2001 by
THE AMERICAN SOCIETY OF MECHANICAL ENGINEERS
All Rights Reserved
Printed in U.S.A.

--`,,`,,`-`-`,,`,,`,`,,`---

Copyright ASME International
Provided by IHS under license with ASME
No reproduction or networking permitted without license from IHS

Not for Resale

FOREWORD

This Standard is based on current industrial and research practices and was prepared by the ASME Committee on Measurement of Fluid Flow In Closed Conduits (MFC).

This Standard was approved as an American National Standard on May 24, 2001.

Copyright ASME International
Provided by IHS under license with ASME
No reproduction or networking permitted without license from IHS
Not for Resale

ASME STANDARDS COMMITTEE MFC
Measurement of Fluid Flow In Closed Conduits

(The following is the roster of the Committee at the time of approval of this Standard.)

OFFICERS

Z. D. Husain, *Chair*
R. J. DeBoom, *Vice Chair*
R. L. Crane, *Secretary*

COMMITTEE PERSONNEL

N. A. Alston, Daniel Measurement & Control
C. J. Blechinger, Consultant
R. W. Caron, Ford Motor Co.
G. P. Corpron, Equipmeter, Inc.
R. L. Crane, American Society of Mechanical Engineers
R. J. DeBoom, Micro Motion, Inc.
P. G. Espina, Controlotron Corp.
D. Faber, Badger Meter, Inc.
R. H. Fritz, Saudi Aramco
F. D. Goodson, Daniel Measurement & Control
Z. D. Husain, Texaco, Inc.
E. H. Jones, Jr., Chevron Petroleum Technology
T. M. Kegel, Colorado Engineering Experiment Station, Inc.
D. R. Keyser, Naval Air Warfare Center Aircraft Division
C. G. Langford, Cullen G. Langford, Inc.
W. M. Mattar, Foxboro M&I
G. E. Mattingly, National Institute of Standards and Technology
M. P. McHale, McHale and Associates, Inc.
D. R. Mesnard, Direct Measurement Corp.
R. W. Miller, R. W. Miller & Associates
J. W. Nelson, Consultant
W. F. Seidl, Colorado Engineering Experiment Station, Inc.
D. W. Spitzer, Cooperhill and Pointer Inc.
D. H. Strobel, Consultant
S. H. Taha, Preso Meters Corp.
J. H. Vignos, Consultant
D. E. Wiklund, Rosemont, Inc.
I. Williamson, Nova Research & Tech Corp.
D. C. Wyatt, Wyatt Engineering and Design

SUBCOMMITTEE 2 — PRESSURE DIFFERENTIAL DEVICES

Z.D. Husain, *Chair,* Texaco, Inc.
R. M. Bough, Allison Engine Co.
R. H. Fritz, Saudi Aramco
F. D. Goodson, Daniel Measurement & Control
C. G. Langford, Cullen G. Langford, Inc.
M. P. McHale, McHale and Associates, Inc.
R. J. W. Peters, McCrometer
A. M. Quaraishi, American Gas Association

Copyright ASME International
Provided by IHS under license with ASME
No reproduction or networking permitted without license from IHS
Not for Resale

W. F. Seidl, Colorado Engineering Experiment Station, Inc.
D. W. Spitzer, Cooperhill and Pointer, Inc.
J. W. Stuart, Pacific Gas & Electric Co.
S. H. Taha, Preso Meters Corp.
D. E. Wiklund, Rosemont, Inc.
D. C. Wyatt, Wyatt Engineering

Copyright ASME International
Provided by IHS under license with ASME
No reproduction or networking permitted without license from IHS
Not for Resale

CORRESPONDENCE WITH THE MFC COMMITTEE

General. ASME Standards are developed and maintained with the intent to represent the consensus of concerned interests. As such, users of this Standard may interact with the Committee by requesting interpretations, proposing revisions, and attending committee meetings. Correspondence should be addressed to:

Secretary, MFC Standards Committee
The American Society of Mechanical Engineers
Three Park Avenue
New York, NY 10016-5990

Proposing Revisions. Revisions are made periodically to the Standard to incorporate changes that appear necessary or desirable, as demonstrated by the experience gained from the application of the Standard. Approved revisions will be published periodically.

The Committee welcomes proposals for revisions to this Standard. Such proposals should be as specific as possible, citing the paragraph number(s), the proposed wording, and a detailed description of the reasons for the proposal, including any pertinent documentation.

Interpretations. Upon request, the MFC Standards Committee will render an interpretation of any requirement of the Standard. Interpretations can only be rendered in response to a written request sent to the Secretary of the MFC Standards Committee.

The request for interpretation should be clear and unambiguous. It is further recommended that the inquirer submit his request in the following format:

Subject:	Cite the applicable paragraph number(s) and the topic of the inquiry.
Edition:	Cite the applicable edition of the Standard for which the interpretation is being requested.
Question:	Phrase the question as a request for an interpretation of a specific requirement suitable for genral understanding and use, not as a request for an approval of a proprietary design or situation. The inquirer may also include plans or drawings which are necessary to explain the question; however, they should not contain proprietary names or information.

Requests that are not in this format will be rewritten in this format by the Committee prior to being answered, which may inadvertently change the intent of the original request.

ASME procedures provide for reconsideration of any interpretation when or if additional information that might affect an interpretation is available. Further, persons aggrieved by an interpretation may appeal to the cognizant ASME Committee or Subcommittee. ASME does not “approve”, “certify”, “rate”, or “endorse” any item, construction, proprietary device, or activity.

Attending Committee Meetings. The MFC Standards Committee regularly holds meetings, which are open to the public. Persons wishing to attend any meeting should contact the Secretary of the MFC Standards Committee.

--`,,`,,`-`-`,,`,,`,`,,`---

Copyright ASME International
Provided by IHS under license with ASME
No reproduction or networking permitted without license from IHS
Not for Resale

CONTENTS

Foreword iii
Committee Roster iv
Committee Correspondence vi

1 Introduction 1

2 Scope 1
2.1 Field of Application 1
2.2 References and Related Documents 1

3 General 1
3.1 Containment 1
3.2 Codes 1
3.3 Specification Break 1
3.4 Pressure Test 2
3.5 Inspection 2
3.6 Rod Out 2
3.7 Valve Orientation 2
3.8 Manifold 2
3.9 Installation 2
3.10 Valve Arrangement 3

4 Horizontal Piping Installations 3
4.1 Gas 3
4.2 Liquid 3
4.3 Condensing Vapor 3

5 Vertical Piping Installations 4
5.1 Gas 4
5.2 Liquids 4
5.3 Condensing Vapor Service 4

6 Piezometer Ring 4

7 Special Cases 4
7.1 Pressure Taps 4
7.2 Impulse Line Size 4
7.3 Insulation 5

Figure
1 Primary and Secondary at Same Elevation, Preferred Installation 2

Copyright ASME International
Provided by IHS under license with ASME
No reproduction or networking permitted without license from IHS
Not for Resale

Nonmandatory Appendices

A Impulse Line Dynamics 7
B Elevation Head Example Calculation 8
C Supplemental Figures 9

Copyright ASME International
Provided by IHS under license with ASME
No reproduction or networking permitted without license from IHS
Not for Resale

FLUID FLOW IN CLOSED CONDUITS: CONNECTIONS FOR PRESSURE SIGNAL TRANSMISSIONS BETWEEN PRIMARY AND SECONDARY DEVICES

1 INTRODUCTION

This Standard provides guidance in the design of the pressure signal connections between a flowmeter primary device and the secondary device where they are physically separate and connected by gauge lines or impulse piping. The primary device or flow element creates a pressure difference or head at the pressure taps, which is related to the flow rate. The secondary device may display and may convert and transmit the flow signal to another location.

2 SCOPE

This Standard describes the practices and means which allow the pressures at a head type primary device to be conveyed to the secondary device in a flow measurement system without introducing unnecessary measurement uncertainties.

2.1 Field Of Application

This Standard is concerned only with the transmission of the pressure difference developed by a head type primary flow element. It does not address the characteristics of the primary or secondary devices, or transducers or other instruments. Electrical transmission techniques are not considered.

2.2 References and Related Documents

The following is a list of publications referenced in this Standard. Unless otherwise specified, the referenced standard shall be the most recent issue at the time of order placement.

ASME Fluid Meters, Their Theory and Application, Sixth Edition, 1971

ASME MFC-3M, Measurement of Fluid Flow in Pipes Using Orifice, Nozzle, and Venturi (not an American National Standard)

ASME PTC 19.2, Instruments and Apparatus: Part 2 — Pressure Measurement

Publisher: The American Society of Mechanical Engineers (ASME), Three Park Avenue, New York, NY 10016; Order Department: 22 Law Drive, Box 2300, Fairfield, NJ 07007-2300

3 GENERAL

3.1 Containment

Safe containment of the fluid requires conformance to the applicable standards and codes, and requires the selection of the proper materials of construction; the fabrication methods and practices; fittings; and any required gaskets or sealing materials.

3.2 Codes

The pipe or tubing installed between the primary and secondary devices must comply with applicable requirements such as national, local and owner codes, standards, and guidelines. The process piping specification determines the specifications for the block or the valve closest to the primary element. The specifications for the piping between this valve and the secondary device, and any valves in this piping, may differ. The small size, limited flow, and often the more limited temperatures involved, justifies these differences (see Fig. 1).

3.3 Specification Break

The break (change) in piping specifications between *process* and the *secondary* or *instrument* side is normally at the secondary end connection of the process valve (see Fig. 1). If the process piping specification requires flanged connection, then the process end of this valve

Copyright ASME International
Provided by IHS under license with ASME
No reproduction or networking permitted without license from IHS
Not for Resale

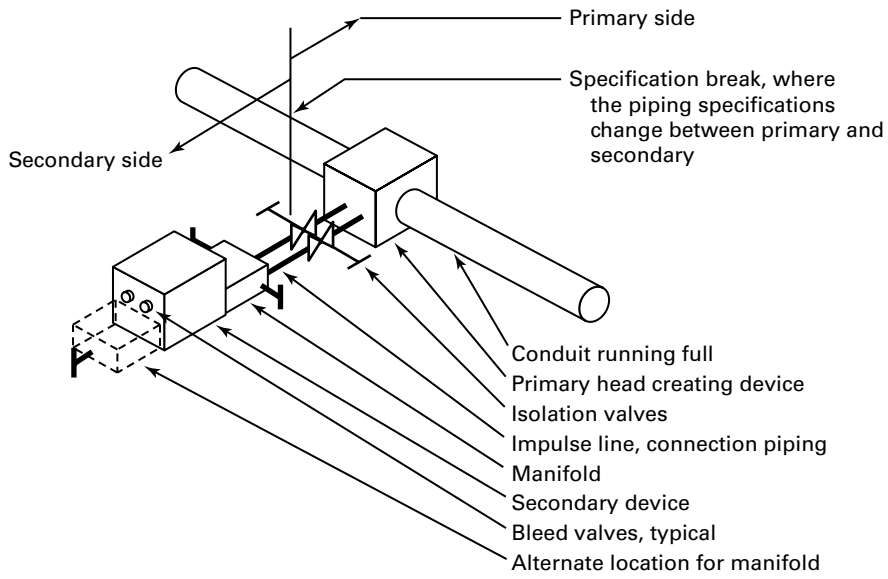

FIG. 1 PRIMARY AND SECONDARY AT SAME ELEVATION, PREFERRED INSTALLATION

is flanged and the mating flange on the secondary side is an instrument connection or may have another approved fitting.

3.4 Pressure Test

An approved hydrostatic pressure test may be required for piping systems to prove the integrity of the pressure containing parts of the piping system.

3.5 Inspection

A visual inspection of each installation is recommended for adherence to safety and measurement requirements before putting each flowmeter into operation (see MFC-3M). Install primary per manufacturer instructions.

3.6 Rod Out

Some installations will require provision for *rodding out* of the process connections. This is the use of a rod or other physical device to remove materials blocking the free flow of fluid into the impulse lines. Observe the applicable safety precautions.

3.7 Valve Orientation

Globe style block valves may create a pocket of gas or liquid if they are installed with the stem in the vertical orientation. This pocket may result in a pressure difference and an error in the indicated measurement. Installation with the stem at an angle of 90 deg from the vertical normally solves this problem. Ball valves and gate valves do not have this problem.

3.8 Manifold

Valves are often installed to permit calibrating the secondary device without removing it. These are used to block the impulse pressure lines from the primary device and to open a path between the high and low secondary device pressure taps. Where specified, two additional valves are installed to allow draining or venting of the impulse piping to the atmosphere or drain. The secondary device zero, or no flow signal, can be adjusted at operating pressure with one block valve closed and the bypass valve open. Manufactured valve manifolds may reduce cost and save space. Manifolds integrate the required valves and connections into one assembly and have connection spacing compatible with orifice flanges and the standard secondary devices. (see Fig. C1). Install manifolds in the orientation specified by the manufacturer to avoid possible errors caused by pockets of trapped gas or liquid in the body.

3.9 Installation

The preferred design will minimize the separation between the primary and secondary devices. In some installations, the isolation valves and the bypass manifold are omitted. As an alternative (see Fig. 1), the bypass manifold may be installed to the back connections of the secondary to further reduce fittings and obstructions to pressure signal flow. The connecting

Copyright ASME International
Provided by IHS under license with ASME
No reproduction or networking permitted without license from IHS
Not for Resale

piping is variously referred to as *impulse lines*, *gauge lines*, *instrument tubing*, or *instrument piping*.

The detail design for the installation of the flowmeter secondary system should consider instrument troubleshooting and calibration. Access to the impulse lines, the valves, manifold and the secondary device is required. Installations providing this access must not compromise the measurement accuracy by adding excessive pressure sensing lines and fittings. Longer and more complex piping may increase uncertainties and provide more opportunity for plugging. Plugged lines lead to loss of control and may create hazardous situations.

Any difference in elevation between the primary device pressure taps and the secondary will result in a pressure difference between the two ends. If the fluids in the two lines are not identical in density, a difference in pressure is generated. Density differences will arise if there is a temperature difference between the fluids in the two impulse lines. (See Appendix B for an example of a typical calculation.) It is recommended that the two impulse lines are fastened together and, if insulated, they are insulated together. Non-identical fluids in the two impulse lines can also give rise to density differences.

It is also recommended that, where allowable, the secondary be "bled" or "vented" after installation to clear the impulse lines of fluids left during the construction or after hydrostatic testing or system cleaning. Bleed valves may be included in manifolds or in the secondary device body, or installed as needed.

Periodic bleeding may be required if the characteristics of the fluids in the impulse lines change over time with fluid aging and with diffusion or leakage into or out of the impulse lines.

The general experience in industry is that dirt is everywhere, and that liquids will have entrained or condensed liquids. It is good practice to design the installation to allow for natural draining of liquids or venting of gases.

3.10 Valve Arrangement

Where the primary device uses flange taps in the smaller size pipes, it is likely that block valves and flanges will physically interfere with each other if they are mounted directly in line with the primary device pressure taps (see Fig. C2). In vertical lines, alternate flange taps can be used to avoid mechanical interference; but this practice is not encouraged. Vertical flow installation of head type meters in vapor service is discouraged.

4 HORIZONTAL PIPING INSTALLATIONS

4.1 Gas

Pressure taps on the primary element shall be on the horizontal centerline or up to the top of the pipe unless the measured fluid is a vapor which is intended to condense in the secondary system (see para. 4.3). Liquids or condensate must be free to flow down and out of the measurement system (see Fig. C3). The recommended slope for self draining is a minimum of 1 in 12.

4.2 Liquid

Pressure taps shall be on the horizontal centerline. Taps below the centerline may accumulate solids; taps above the centerline will accumulate air or non-condensable gases. In liquid service, the connecting lines from the primary device shall slope downward to the secondary with no up turns or pockets (see Fig. C4). Gas bubbles must be free to flow up and out of the measurement system. The recommended slope for self venting is a minimum of 1 in 12.

4.3 Condensing Vapor

The pressure taps shall be on the horizontal centerline of the primary device. In condensing hot vapor service, such as steam, the fluid in the impulse lines is liquid condensed from the vapor. Follow the arrangement requirements for liquids with the secondary device below the primary (see Fig. C4). Cryogenic (very low temperatures) systems may require special designs. The liquid in the lines will isolate the secondary device from the temperatures of the primary flowing fluid. The temperature difference may be considerable over a short distance of 100 mm to 200 mm (4 in. to 8 in.).

There is a concern that at startup the secondary device could be exposed to the vapor temperature before the lines fill with condensate and cool. A plugged tee fitting in the impulse line will permit filling the impulse tubing and secondary with water (for steam service) before startup (see Fig. C5).

Where permitted, this problem may be mitigated by a careful commissioning procedure slowly filling the system and allowing sufficient time for pressure transmitting lines to condense vapors.

Copyright ASME International
Provided by IHS under license with ASME
No reproduction or networking permitted without license from IHS
Not for Resale

5 VERTICAL PIPING INSTALLATIONS

5.1 Gas

In non–condensing service (see para. 4.1), the connecting lines from the primary shall slope upward as described for gas service in horizontal lines above (see Fig. C3).

5.2 Liquids

See the description for liquid service in horizontal lines in para. 4.2. If the temperatures inside the pipe and in the impulse lines differ by no more than about 20°C (68°F), the difference in density over the small height difference between the pressure taps should have only a small effect (see Fig. C3).

5.3 Condensing Vapor Service

There are two choices for impulse line design for flow in a vertical line in vapor service.

(a) Equal impulse tubing height installation. The lower impulse line is formed upward before turning horizontal and then down to the secondary. This provides an equal head of liquid in both vertical impulse lines. In this case, there is no need for special calibration (See Fig. C5).

(b) Calibration compensated installation. The two impulse lines leave the pipe horizontally, then turn down to the secondary device. The zero of the secondary device must be adjusted to account for the difference in the heights of the two impulse lines and the contained liquid (see Nonmandatory Appendix B).

6 PIEZOMETER RING

A *piezometer ring* may be used to physically average the pressures from the several pressure taps in the plane of the primary device. There may be a need to periodically vent or drain the ring (See Fig. C6). The considerations described in sections 4 and 5 also apply to piezometer installations.

7 SPECIAL CASES

Any installation which differs from the above guidelines will require careful design and attention to details to avoid errors. As an example, it is possible to install a primary element in a buried liquid line with the secondary above it, if any accumulated gases are removed from the impulse lines before they accumulate enough to depress the liquid level in the impulse lines (See Fig. C7). Primary elements in gas service with the secondary mounted below the primary will require provision for accumulation and removal of liquids before the liquids rise above the secondary device pressure taps (See Fig. C8). For condensing vapors with the secondary above the primary, see Fig. C9. A clean fluid can be used to purge the system to keep dirt out or to ensure the contents of the system (See Fig. C10).

Pre-filled physical barrier diaphragm seals called remote seals or chemical seals are used in certain applications. Deflection of the diaphragm requires some small force that must be considered in the calibration process. Errors are reduced with larger diaphragms and good design. It is recommended that the impulse lines or capillary tubes to remote seals be of identical length and be arranged to reduce the exposure to different temperatures.

Maintenance of special systems may be labor intensive and require care and knowledge. The recommended installations require less maintenance to continue accurate measurement.

7.1 Pressure Taps

The pressure taps must accurately sense the pressure of interest (see MFC-3M). The holes through the pipe wall, or through orifice flanges must be smooth and have no protruding internal burrs resulting from drilling or welding. Pressure tap connections shall be at right angles to the centerline of the pipe. The hole bored through the pipe wall is to be no larger than required to avoid plugging. Industry practice is to accept the boring provided in standard orifice flanges. Typical values are $\frac{1}{4}$ in. for pipes $1\frac{1}{2}$ in. and smaller; $\frac{3}{8}$ in. for 2 in. pipe; and $\frac{1}{2}$ in. for pipes 3 in. and larger. Research laboratories and aerospace applications with very clean fluids prefer smaller holes because larger holes may interfere with fluid flow near the pipe wall. In very dirty services, flush diaphragm seals have been used. To ensure measurement sensitivity, diaphragms are typically a nominal 80 mm or 100 mm (3 in. or 4 in.) in diameter.

7.2 Impulse Line Size

The required diameter of the impulse line depends on the service conditions. Lines smaller than 6 mm ($\frac{1}{4}$ in.) will not easily allow gas bubbles to flow up and out of a liquid system, nor allow liquid drops to flow down. In smaller sizes and with liquids, capillary effects may become significant.

Copyright ASME International
Provided by IHS under license with ASME
No reproduction or networking permitted without license from IHS
Not for Resale

7.2.1 Process Industries. In most process control applications, the primary concern is reliability. If the pressure taps or the impulse lines plug, then the flow rate information is lost. The automatic control system will manipulate the controls and attempt to control the flow. This may result in a dangerous or expensive variation from the desired operating conditions. High reliability is required for flow signals used in the process safety management. A minimum I.D. of 16 mm ($\frac{1}{2}$ in. pipe, $\frac{3}{8}$ in. tubing) O.D. tubing is recommended in industrial applications. Some users specify 18 mm ($\frac{3}{4}$ in. tubing) as the minimum. For high temperatures in condensing vapor service, 25 mm (1 in. IPS) is required to allow for unimpeded flow of condensate (see ASME Fluid Meters, 6th Ed.). In small piping and with clean fluids, appropriate smaller sizes are used.

7.2.2 Research and Special Applications. For a discussion of dynamic response, see Nonmandatory Appendix A. For special applications where fast dynamics are important and where fluids can be kept clean, special transducers with very small internal volumes or with flush diaphragms are used. The installation will be engineered to suit the application and then tested to ensure that the data collected are accurate and suitable for the application. Lines as small as 4 mm ($\frac{1}{8}$ in.) have been used. The lines must be short and carefully arranged. Testing and proving of special installations is advisable.

7.3 Insulation

Some hot or very cold lines require thermal insulation for personnel protection. It may be necessary to insulate and "heat trace" impulse lines to avoid freezing or unintended condensation. The amount of heat used must avoid the undesired vaporizing of liquids in liquid filled lines or the prevention of condensation with condensing vapors. It is preferred to bundle the impulse lines together and to insulate and trace them together so that the impulse lines will be at nearly the same temperature.

Copyright ASME International
Provided by IHS under license with ASME
No reproduction or networking permitted without license from IHS
Not for Resale

Copyright ASME International
Provided by IHS under license with ASME
No reproduction or networking permitted without license from IHS
Not for Resale

NONMANDATORY APPENDIX A
IMPULSE LINE DYNAMICS

The pipe or tubing between the primary element and the secondary device is a complex and imperfect transmission line. At a constant pressure or with slow changes, the difference in pressure between the primary and the secondary devices will be due only to elevation effects. Compressibles inside impulse lines will have acoustic resonant frequencies with standing waves and pressure maximums $^1/_4$ wave lengths apart. Depending on the properties of the flowing fluid, the geometry of the pressure tap, and the tube connecting the pressure transmitter, certain frequencies can be amplified in the lead line. Amplified pressure pulses may affect the secondary device. The magnitude of this effect varies with the type of secondary device, the geometry of the meter, flowing conditions, frequency response of the pressure transmitter, etc. Significant errors are reported with meters in reciprocating gas compressor discharges when pressure pulsation is in excess of 10% of the static pressure. The problems are minimized with the use of short and direct pressure transmitting lines of constant inside diameter, and with a minimum of extra fittings.

Copyright ASME International
Provided by IHS under license with ASME
No reproduction or networking permitted without license from IHS
Not for Resale

NONMANDATORY APPENDIX B
ELEVATION HEAD EXAMPLE CALCULATION

One hundred inches of elevation difference between the primary and secondary element elevation with a 20°F temperature difference between two water filled tubes creates a pressure difference of 0.25 in. of water. This error is independent of the secondary device calibration span or the actual flow. With a relatively small span, and at low flow rates, the error caused by the impulse line temperature difference could be substantial.

Errors due to liquids standing in gas measurement impulse lines or due to air in liquid meters may be large. Modern instruments can report pressure differences of as small as 0.001 INWC.

TABLE B1 ELEVATION HEAD EXAMPLE CALCULATION[1]

Elevation difference: 100 in.
Service: Water
Ambient Temperature: 20°C (768°F)

	Tube Temp °C (°F)	Sp. Vol. M^3/kg (ft^3/lbm)	Density kg/M^3 (lbm/ft^3)	Density Ratio	mm per m (INWC per 1000)
Base	20 (68)	0.001002 (0.01605)	998.0351 (62.3053)	1.000000	
Case 1	25 (77)	0.001003 (0.01607)	996.7930 (62.22775)	0.998755	1.244555
Case 2	30 (86)	0.001004 (0.01609)	995.5540 (62.1504)	0.997514	2.486016

NOTE:
(1) Specific volume from ASME Steam Tables, Fifth Edition

Copyright ASME International
Provided by IHS under license with ASME
No reproduction or networking permitted without license from IHS
Not for Resale

NONMANDATORY APPENDIX C
SUPPLEMENTAL FIGURES

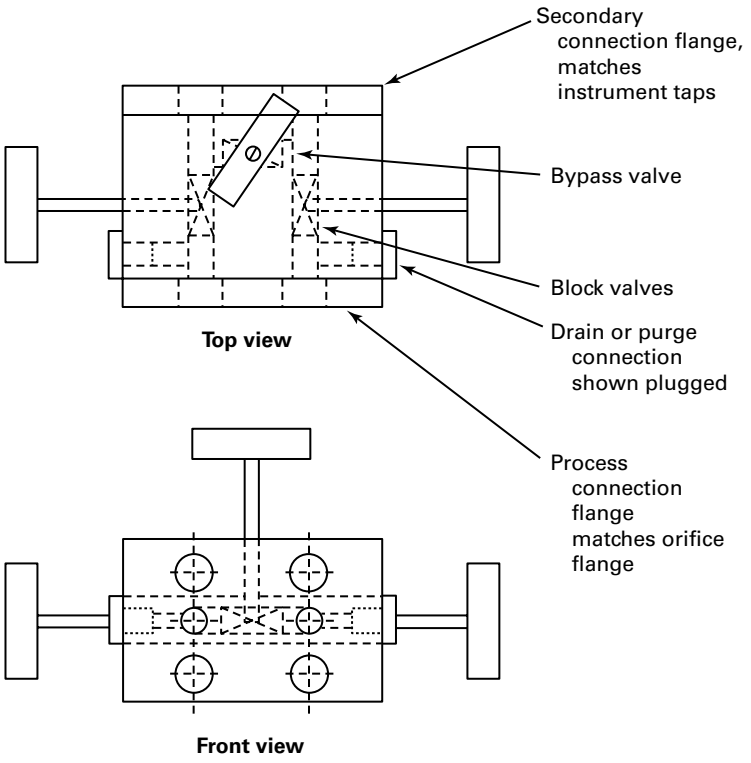

FIG. C1 THREE VALVE MANIFOLD, SCHEMATIC

Copyright ASME International
Provided by IHS under license with ASME
No reproduction or networking permitted without license from IHS
Not for Resale

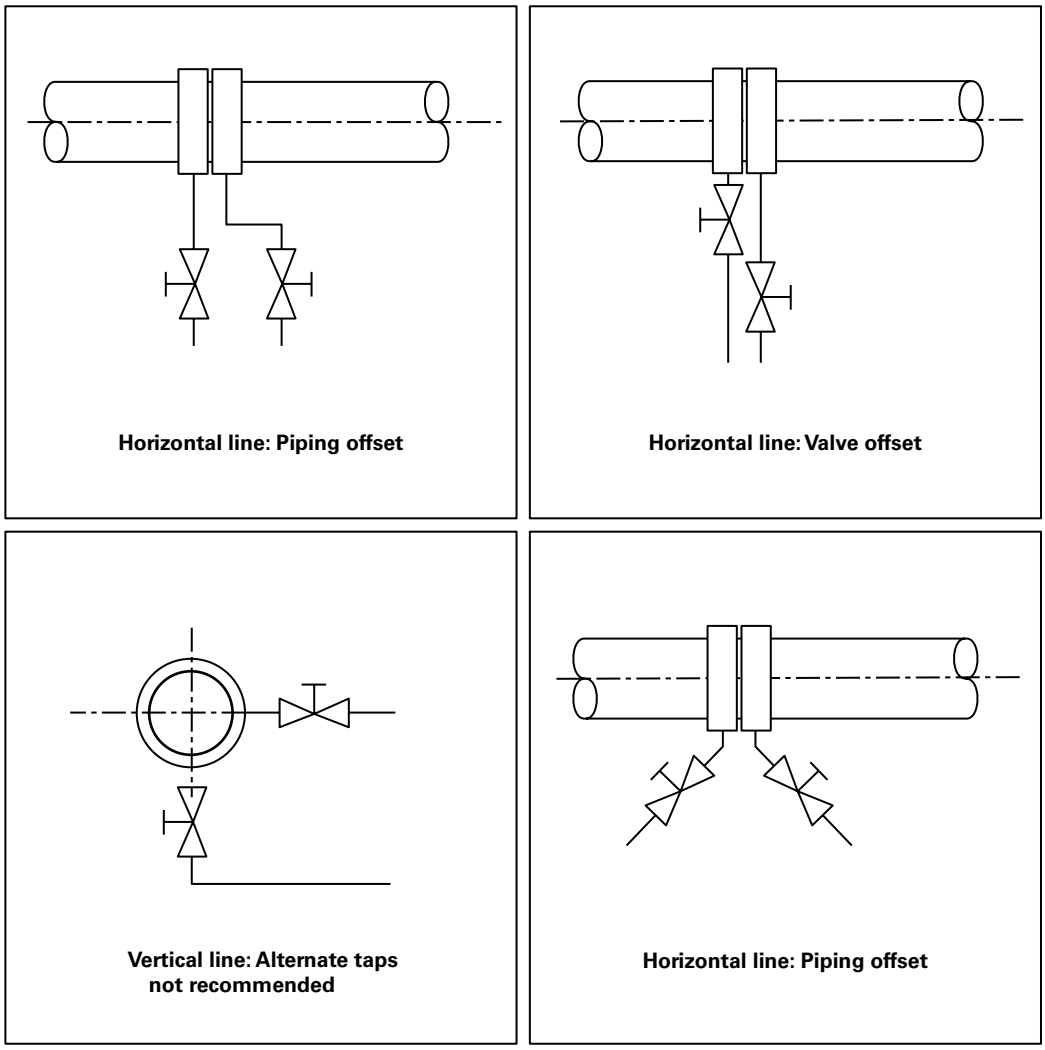

FIG. C2 DETAILS, BLOCK VALVE INTERFERENCE

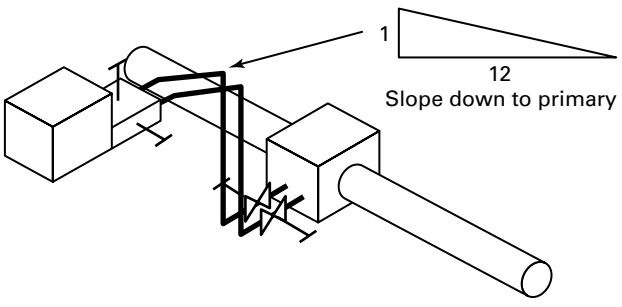

FIG. C3 GAS SERVICE, SECONDARY ABOVE PRIMARY

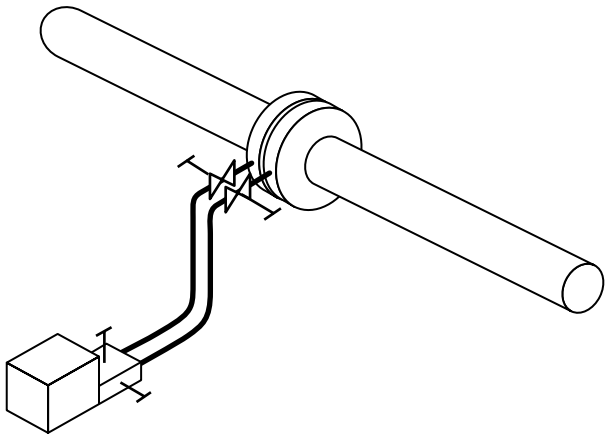

FIG. C4 LIQUID SERVICE, SECONDARY BELOW PRIMARY

Copyright ASME International
Provided by IHS under license with ASME
No reproduction or networking permitted without license from IHS Not for Resale

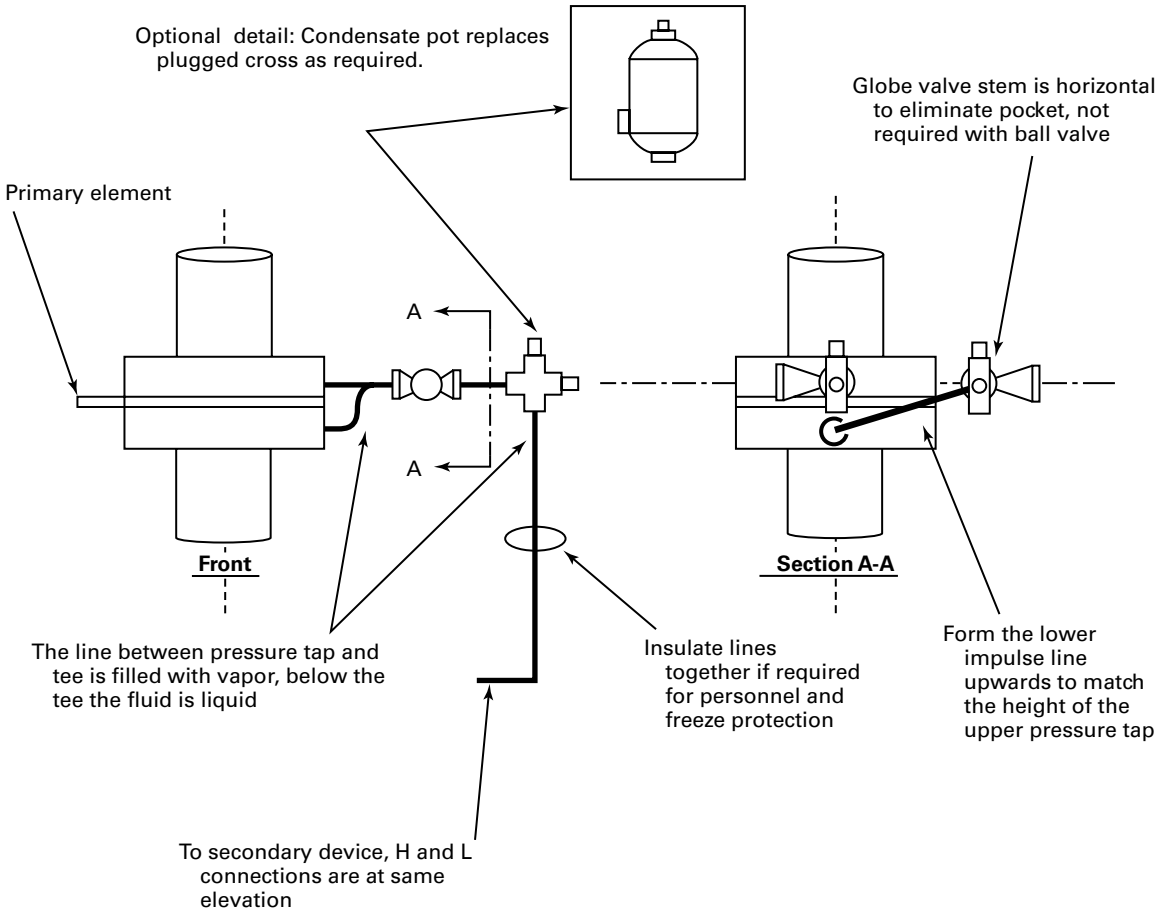

FIG. C5 VERTICAL FLOW, CONDENSING SERVICE, DETAIL FOR EQUAL HEAD INSTALLATION

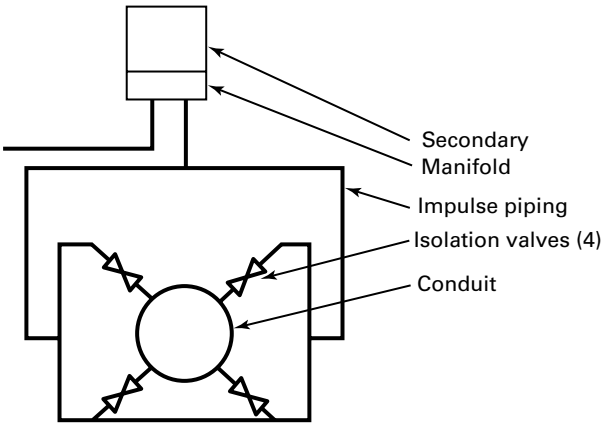

FIG. C6 PIEZOMETER RING, SYMMETRICAL

--`,`-`-`,,`,,`,`,,`---

Copyright ASME International
Provided by IHS under license with ASME
No reproduction or networking permitted without license from IHS Not for Resale

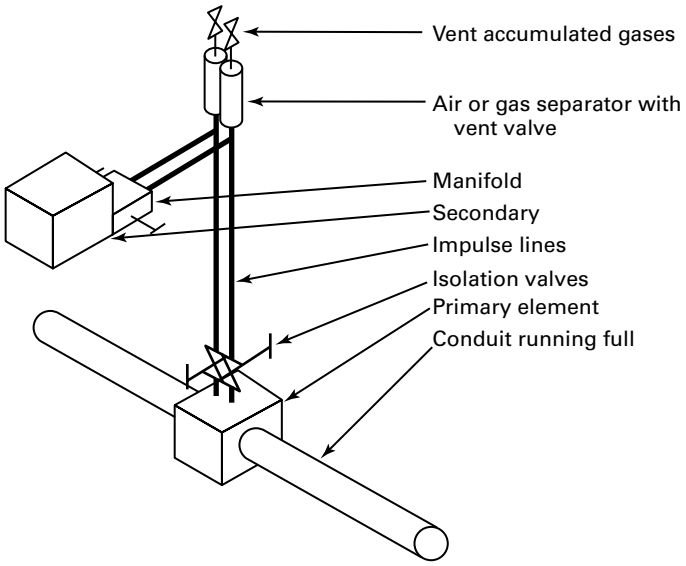

FIG. C7 LIQUID SERVICE, SECONDARY ABOVE PRIMARY

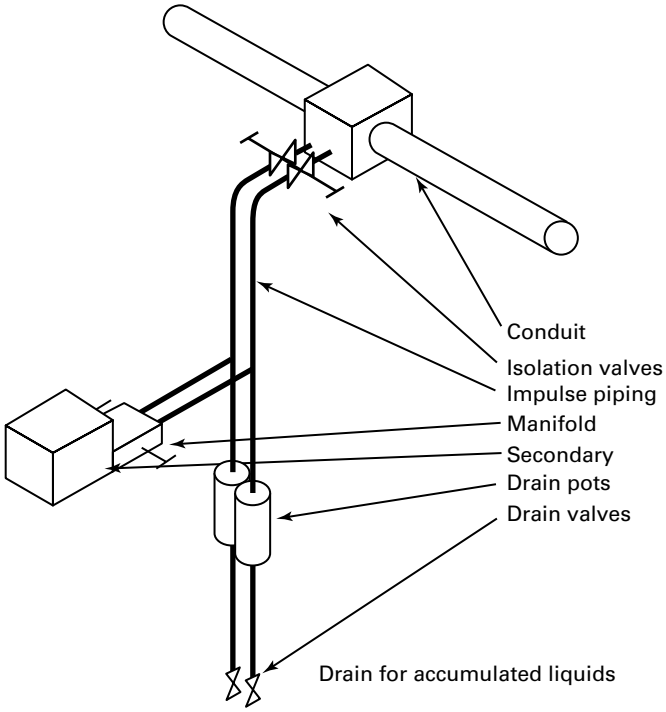

FIG. C8 GAS SERVICE, SECONDARY BELOW PRIMARY

Copyright ASME International
Provided by IHS under license with ASME
No reproduction or networking permitted without license from IHS Not for Resale

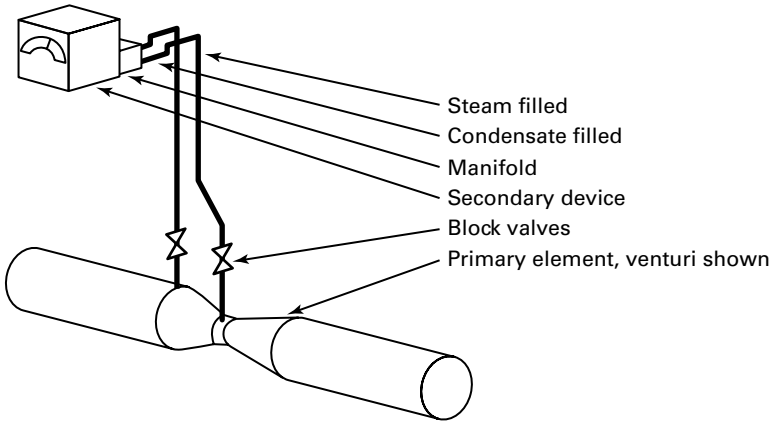

FIG. C9 HORIZONTAL LINE, CONDENSING SERVICE, SECONDARY ABOVE PRIMARY

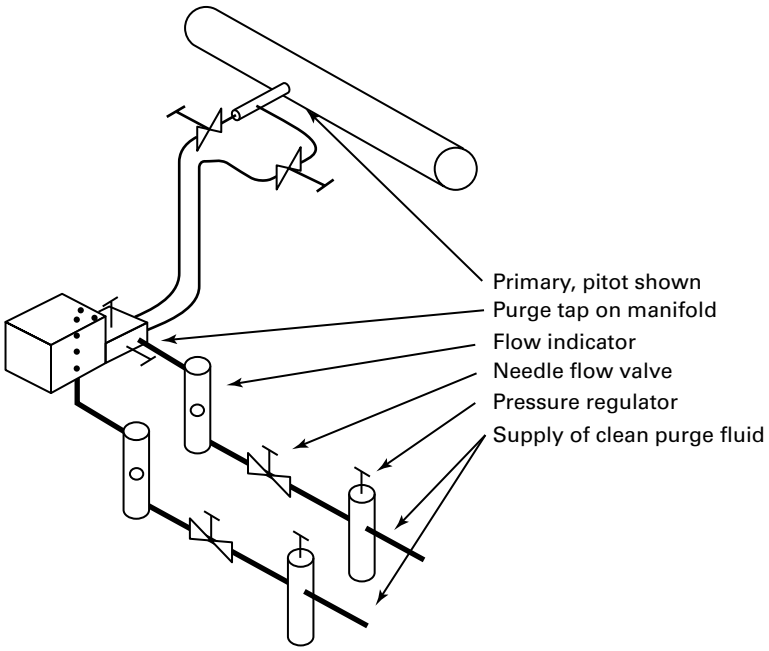

FIG. C10 PURGED SECONDARY SYSTEM, HORIZONTAL LINE, LIQUID SERVICE

Copyright ASME International
Provided by IHS under license with ASME
No reproduction or networking permitted without license from IHS Not for Resale

--`,,`,,`-`-`,,`,,`,`,,`---

Copyright ASME International
Provided by IHS under license with ASME
No reproduction or networking permitted without license from IHS

Not for Resale

ASME Services

ASME is committed to developing and delivering technical information. At ASME's Information Central, we make every effort to answer your questions and expedite your orders. Our representatives are ready to assist you in the following areas:

ASME Press
Codes & Standards
Credit Card Orders
IMechE Publications
Meetings & Conferences
Member Dues Status
Member Services & Benefits
Other ASME Programs
Payment Inquiries
Professional Development
Short Courses
Publications
Public Information
Self-Study Courses
Shipping Information
Subscriptions/Journals/Magazines
Symposia Volumes
Technical Papers

How can you reach us? It's easier than ever!

There are four options for making inquiries* or placing orders. Simply mail, phone, fax, or E-mail us and an Information Central representative will handle your request.

Mail
ASME
22 Law Drive, Box 2900
Fairfield, New Jersey
07007-2900

Call Toll Free
US & Canada: 800-THE-ASME
(800-843-2763)
Mexico: 95-800-THE-ASME
(95-800-843-2763)
Universal: 973-882-1167

Fax-24 hours
973-882-1717
973-882-5155

E-Mail--
24 hours
Infocentral@asme.org

* Information Central staff are not permitted to answer inquiries about the technical content of this code or standard. Information as to whether or not technical inquiries are issued to this code or standard is shown on the copyright page. All technical inquiries must be submitted in writing to the staff secretary. Additional procedures for inquiries may be listed within.

Copyright ASME International
Provided by IHS under license with ASME
No reproduction or networking permitted without license from IHS
Not for Resale

--`-`-`-,,`,,`,`,,`---

Copyright ASME International
Provided by IHS under license with ASME
No reproduction or networking permitted without license from IHS

Not for Resale



ISBN 0-7918-2677-5
9 780791 826775
K12101

Copyright ASME International
Provided by IHS under license with ASME
No reproduction or networking permitted without license from IHS

Not for Resale