ASME MFC-7M 87 ■ 0759670 0049499 5 ■

F-06-05

AN AMERICAN NATIONAL STANDARD

Measurement of Gas Flow by Means of Critical Flow Venturi Nozzles

ASME/ANSI MFC-7M–1987

SPONSORED AND PUBLISHED BY

THE AMERICAN SOCIETY OF MECHANICAL ENGINEERS

United Engineering Center 345 East 47th Street New York, N. Y. 10017

Copyright ASME International
Provided by IHS under license with ASME
No reproduction or networking permitted without license from IHS

Not for Resale

Date of Issuance: May 31, 1987

This Standard will be revised when the Society approves the issuance of a new edition. There will be no addenda or written interpretations of the requirements of this Standard issued to this edition.

This code or standard was developed under procedures accredited as meeting the criteria for American National Standards. The Consensus Committee that approved the code or standard was balanced to assure that individuals from competent and concerned interests have had an opportunity to participate. The proposed code or standard was made available for public review and comment which provides an opportunity for additional public input from industry, academia, regulatory agencies, and the public-at-large.

ASME does not "approve," "rate," or "endorse" any item, construction, proprietary device, or activity.

ASME does not take any position with respect to the validity of any patent rights asserted in connection with any items mentioned in this document, and does not undertake to insure anyone utilizing a standard against liability for infringement of any applicable Letters Patent, nor assume any such liability. Users of a code or standard are expressly advised that determination of the validity of any such patent rights, and the risk of infringement of such rights, is entirely their own responsibility.

Participation by federal agency representative(s) or person(s) affiliated with industry is not to be interpreted as government or industry endorsement of this code or standard.

ASME accepts responsibility for only those interpretations issued in accordance with governing ASME procedures and policies which preclude the issuance of interpretations by individual volunteers.

No part of this document may be reproduced in any form,
in an electronic retrieval system or otherwise,
without the prior written permission of the publisher.

Copyright © 1987 by
THE AMERICAN SOCIETY OF MECHANICAL ENGINEERS
All Rights Reserved
Printed in U.S.A.

Copyright ASME International
Provided by IHS under license with ASME
No reproduction or networking permitted without license from IHS

Not for Resale

FOREWORD

(This Foreword is not part of ASME/ANSI MFC-7M–1987.)

This Standard was prepared by Subcommittee 2, Working Group 5, of the American Society of Mechanical Engineers Committee on Measurement of Fluid Flow in Closed Conduits. The Committee is indebted to the many engineers who contributed to this work.

This Standard is intended to assist the public with the use of critical flow nozzles. Critical flow nozzles are especially suited to flow calibration work and precise flow control applications. They provide a stable flow of a compressible fluid through a closed conduit, the rate of which may be determined with a high degree of accuracy. The Committee has attempted to blend the best available technical information with common practice to develop this Standard. It is as complete a specification as the Committee determined appropriate. Some latitude and variation on the application of the Standard to critical flow venturi nozzles is allowed. However, neither these liberties nor this Standard is intended to replace proper judgment in the application of critical flow venturi nozzles.

This Standard was approved by the American National Standards Institute (ANSI) on February 27, 1987.

Copyright ASME International
Provided by IHS under license with ASME
No reproduction or networking permitted without license from IHS
Not for Resale

ASME STANDARDS COMMITTEE MFFCC
Measurement of Fluid Flow in Closed Conduits

(The following is the roster of the Committee at the time of approval of this Standard.)

OFFICERS

R. W. Miller, *Chairman*
W. F. Z. Lee, *Vice Chairman*
C. J. Gomez, *Secretary*

COMMITTEE PERSONNEL

R. B. Abernethy, Pratt & Whitney Aircraft, West Palm Beach, Florida
N. A. Alston, Diederich Standard Corp., Boulder, Colorado
H. P. Bean, El Paso, Texas
S. R. Beitler, The Ohio State University, Columbus, Ohio
M. Bradner, Foxboro, Massachusetts
E. E. Buxton, St. Albans, West Virginia
J. S. Castorina, Naval Ship System Engineering Station, Philadelphia, Pennsylvania
G. P. Corpron, Rosemount Inc., Eden Prairie, Minnesota
C. F. Cusick, Philadelphia, Pennsylvania
D. G. Darby, Dow Chemical Co., Lake Jackson, Texas
R. B. Dowdell, University of Rhode Island, Kingston, Rhode Island
A. G. Ferron, Alden Research Lab, Holden, Massachusetts
R. L. Galley, Antioch, California
D. Halmi, Primary Flow Signal Inc., Pawtucket, Rhode Island
B. T. Jeffries, Ponca City, Oklahoma
E. H. Jones, Jr., Chevron Oil Field Res. Co., La Habra, California
L. J. Kemp, Palos Verdes Estate, California
C. A. Kemper, Kaye Instruments Inc., Bedford, Massachusetts
D. R. Keyser, NADC, Aero-Mechanical Branch, Warminster, Pennsylvania
C. P. Kittredge, Princeton, New Jersey
C. G. Langford, E. I. DuPont de Nemours and Co., Wilmington, Delaware
E. D. Mannherz, Fischer & Porter Co., Warminster, Pennsylvania
G. E. Mattingly, National Bureau of Standards, Gaithersburg, Maryland
R. V. Moorse, Union Carbide Corp., Tonawanda, New York
M. H. November, Hacienda Heights, California
B. D. Powell, Pratt & Whitney Aircraft Group, West Palm Beach, Florida
W. M. Reese, Jr., Arlington, Texas
P. G. Scott, The Foxboro Co., Foxboro, Massachusetts
H. E. Snider, AWWA Standards Committee, Kansas City, Missouri
D. A. Sullivan, Southeastern Massachusetts University, Sandwich, Massachusetts
R. G. Teyssandier, Daniel Industries Inc., Houston, Texas

Copyright ASME International
Provided by IHS under license with ASME
No reproduction or networking permitted without license from IHS
Not for Resale

SUBCOMMITTEE 2 — PRESSURE DIFFERENTIAL DEVICES

W. M. Reese, Jr., *Chairman,* Arlington, Texas
H. P. Bean, El Paso, Texas
S. R. Beitler, The Ohio State University, Columbus, Ohio
M. Bradner, The Foxboro Co., Foxboro, Massachusetts
E. E. Buxton, St. Albans, West Virginia
C. F. Cusick, Philadelphia, Pennsylvania
P. J. Disimile, University of Cincinnati, Cincinnati, Ohio
R. B. Dowdell, University of Rhode Island, Kingston, Rhode Island
W. A. Fling, Jr., Cities Service Oil and Gas Corp., Tulsa, Oklahoma
G. B. Golden, Houston Lighting and Power, Bacliff, Texas
D. Halmi, Primary Flow Signal Inc., Pawtucket, Rhode Island
G. E. Mattingly, National Bureau of Standards, Gaithersburg, Maryland
R. M. Reimer, General Electric Co., Cincinnati, Ohio
R. G. Teyssandier, Daniel Industries, Inc., Houston, Texas

Subcommittee 2, Working Group 5 — Critical Flow Measurement

E. H. Jones, *Chairman,* Chevron Oil Field Services Company, La Habra, California
D. Halmi, Primary Flow Signal Inc., Pawtucket, Rhode Island
R. M. Reimer, General Electric Co., Cincinnati, Ohio
R. E. Smith, Jr., Sverdrup Tech. Inc., Arnold Air Force Station, Tennessee
R. G. Teyssandier, Daniel Industries, Inc., Houston, Texas
C. R. Varner, Vernon, Connecticut

Copyright ASME International
Provided by IHS under license with ASME
No reproduction or networking permitted without license from IHS
Not for Resale

CONTENTS

Foreword iii
Standards Committee Roster v

1 Scope and Field of Application 1

2 Symbols and Definitions 1
2.1 Symbols 1
2.2 Definitions 1

3 Basic Equations 5
3.1 State Equation 5
3.2 Flow Rate in Ideal Conditions 5
3.3 Flow Rate in Real Conditions 5

4 Applications For Which the Method is Suitable 5

5 Standard Critical Flow Venturi Nozzles 6
5.1 General Requirements 6
5.2 Standard Venturi Nozzles 6

6 Installation Requirements 8
6.1 General 8
6.2 Upstream Pipeline 8
6.3 Large Upstream Space 8
6.4 Downstream Requirements 8
6.5 Pressure Measurement 8
6.6 Drain Holes 10
6.7 Temperature Measurement 10
6.8 Density Measurement 10

7 Calculation Methods 10
7.1 Method of Mass Flow Rate Computation 10
7.2 Discharge Coefficient 10
7.3 Computation of Real Gas Critical Flow Function 11
7.4 Conversion of Measured Pressure and Temperature to Stagnation Conditions 11
7.5 Maximum Permissible Downstream Pressure 11

8 Uncertainties in the Measurement of Flow Rate 11

Figures
1 Toroidal Throat Venturi Nozzle 7
2 Cylindrical Throat Venturi Nozzle 8
3 Installation Requirements for an Upstream Pipework Configuration 9

Copyright ASME International
Provided by IHS under license with ASME
No reproduction or networking permitted without license from IHS
Not for Resale

4 Detail of Pressure Tap 9
5 Maximum Permissible Back Ratio for Critical Flow Venturi Nozzles 12

Table
1 Symbols 2

Appendices
A Venturi Nozzle Discharge Coefficients 13
B References from Which Standard Critical Flow Venturi Nozzle Discharge Coefficients Were Obtained 15
C Example Flow Calculation 17
D Critical Flow Functions 25
E The Critical Flow Coefficient 29

Figure
C1 Sectional View of the Nozzle and Pipe 17

Tables
A1 Toroidal Throat Venturi Nozzle Discharge Coefficient 13
A2 Cylindrical Throat Venturi Nozzle Discharge Coefficient 13
A3 Comparison of Theoretical and Experimental Discharge Coefficients for the Toroidal Throat Nozzle 13
E1 Table of Fluids for Various Equations of State 32
E2 Critical Flow Coefficient for Nitrogen 33
E3 Critical Flow Coefficient for Oxygen 33
E4 Critical Flow Coefficient for Argon 33
E5 Critical Flow Coefficient for Methane 34
E6 Critical Flow Coefficient for Carbon Dioxide 34

Copyright ASME International
Provided by IHS under license with ASME
No reproduction or networking permitted without license from IHS
Not for Resale

MEASUREMENT OF GAS FLOW BY MEANS OF CRITICAL FLOW VENTURI NOZZLES

1 SCOPE AND FIELD OF APPLICATION

This Standard applies only to the steady flow of single-phase gases and deals with devices for which direct calibration experiments have been made, sufficient in number and quantity to enable inherent systems of applications to be based on their results and coefficients to be given with certain predictable limits of uncertainty. The critical flow venturi nozzles dealt with can only be used within limits that are specified, for example nozzle throat to inlet diameter ratio and Reynolds number.

This Standard specifies the geometry and method of use (installation and operating conditions) of critical flow venturi nozzles inserted in a system to determine the mass flow rate of the gas flowing through the system. It also gives necessary information for calculating the flow rate and its associated uncertainty.

This Standard applies only to venturi nozzles in which the flow is critical. Critical flow exists when the mass flow rate through the venturi nozzle is the maximum possible for the existing upstream conditions. At critical flow or choked conditions, the average gas velocity at the nozzle throat closely approximates the local sonic velocity.

Information is given in this Standard for cases in which:

(*a*) the pipeline upstream of the venturi nozzle is of circular cross section; or

(*b*) it can be assumed that there is a large space upstream of the venturi nozzle.

The venturi nozzles specified in this Standard are called primary devices. Other instruments for the measurement are known as *secondary devices.* This Standard covers primary devices; secondary devices will be mentioned only occasionally.

2 SYMBOLS AND DEFINITIONS

2.1 Symbols

The symbols used in this Standard are listed in Table 1.

2.2 Definitions

2.2.1 Pressure Measurement

wall pressure tap — hole drilled in the wall of a conduit, the inside edge of which is flush with the inside surface of the conduit

static pressure of a gas — the actual pressure of the flowing gas, which can be measured by connecting a pressure gauge to a wall pressure tap. Only the value of the absolute static pressure is used in this Standard.

stagnation pressure of a gas — pressure that would exist in the gas if the flowing gas stream were brought to rest by an isentropic process. Only the value of the absolute stagnation pressure is used in this Standard.

2.2.2 Temperature Measurement

static temperature of a gas — actual temperature of the flowing gas. Only the value of the absolute static temperature is used in this Standard.

stagnation temperature of a gas — temperature that would exist in the gas if the flowing gas stream were brought to rest by an adiabatic process. Only the value of the absolute stagnation temperature is used in this Standard.

2.2.3 Critical Flow Nozzles

venturi nozzle — a convergent divergent restriction inserted in a system intended for the measurement of flow rate

throat — the minimum diameter section of the venturi nozzle

critical venturi nozzle — a venturi nozzle for which the nozzle geometrical configuration and conditions of use are such that the flow rate is critical

2.2.4 Flow

mass flow rate — the mass of gas per unit time passing through the venturi nozzle. In this Standard, flow rate is always the steady-state or equilibrium mass flow rate.

throat Reynolds number — In this Standard the nozzle throat Reynolds number is calculated from the gas velocity, density at the nozzle throat, and gas viscosity

Copyright ASME International
Provided by IHS under license with ASME
No reproduction or networking permitted without license from IHS
Not for Resale

TABLE 1 SYMBOLS

Symbol	Description	Dimensions [Note (1)]	SI (Metric) Unit	US (Customary) Unit
A^*	Area of venturi nozzle throat	L^2	m^2	$in.^2$
A_2	Area of venturi nozzle exit	L^2	m^2	$in.^2$
B	Bias	...	...	...
C	Coefficient of discharge	Dimensionless		
C_{Ri}	Critical flow function for one-dimensional isentropic flow of a real gas	Dimensionless		
C_{*i}	Critical flow function for one-dimensional isentropic flow of a perfect gas	Dimensionless		
C_R	Real gas critical flow coefficient for one-dimensional real gas flow	Dimensionless		
D	Diameter of upstream conduit	L	m	in.
d	Diameter of venturi nozzle throat	L	m	in.
e	Relative uncertainty	Dimensionless		
h	Specific enthalpy of the gas	$L^2 T^{-2}$	J/kg	BTU/lbm
M	Molecular mass	M	kg/kg•mole	lbm/lbm-mole
Ma	Mach number	Dimensionless		
P_1	Absolute static pressure of the gas at the nozzle inlet	$ML^{-1}T^{-2}$	Pa	$lbf/in.^2$
P_2	Absolute static pressure of the gas at nozzle exit	$ML^{-1}T^{-2}$	Pa	$lbf/in.^2$
P_0	Absolute stagnation pressure of the gas at nozzle inlet	$ML^{-1}T^{-2}$	Pa	$lbf/in.^2$
P^*	Absolute static pressure of the gas at nozzle throat	$ML^{-1}T^{-2}$	Pa	$lbf/in.^2$
P^*_i	Absolute static pressure of the gas at nozzle throat for one-dimensional isentropic flow of a perfect gas	$ML^{-1}T^{-2}$	Pa	$lbf/in.^2$
$(P_2/P_0)i$	Ratio of nozzle exit static pressure to stagnation pressure for one-dimensional isentropic flow of a perfect gas	Dimensionless		
q_m	Mass flow rate	MT^{-1}	$kg•s^{-1}$	lbm/sec
q_{mi}	Mass flow rate for one-dimensional isentropic flow	MT^{-1}	$kg•s^{-1}$	lbm/sec

Copyright ASME International
Provided by IHS under license with ASME
No reproduction or networking permitted without license from IHS

Not for Resale

TABLE 1 SYMBOLS (CONT'D)

Symbol	Description	Dimensions [Note (1)]	SI (Metric) Unit	US (Customary) Unit
R	Universal gas constant	$L^2T^{-2}\theta^{-1}$	$\frac{J}{kg \cdot mole \cdot K}$	$\frac{BTU}{lbm\text{-}mole\text{-}^\circ R}$
Re_d	Nozzle throat Reynolds number	Dimensionless		
r_c	Radius of curvature of nozzle inlet	L	m	in.
r_*	Critical pressure ratio P^*/P_0	Dimensionless		
s	Specific entropy of the gas	$L^2T^{-2}\theta^{-1}$	$J \cdot kg^{-1} \cdot K^{-1}$	BTU/lbm-°R
T^*	Absolute static temperature at nozzle throat	θ	K	°R
t_{95}	Two-tailed Student's t	. . .	. . .	. . .
U_{RSS}, U_{95}	Uncertainty at the 95% confidence level	. . .	. . .	. . .
U_{ADD}, U_{99}	Uncertainty at the 99% confidence level	. . .	. . .	. . .
T_0	Absolute stagnation temperature of the gas	θ	K	°R
V^*	Throat sonic flow velocity	LT^{-1}	$m \cdot s^{-1}$	ft/sec
V	Average fluid velocity	LT^{-1}	$m \cdot s^{-1}$	ft/sec
Z	Compressibility factor	Dimensionless		
Z_0	Compressibility factor at T_0 and P_0	Dimensionless		
α	Temperature probe constant	Dimensionless		
β	The ratio of d/D	Dimensionless		
γ	Ratio of specific heats	Dimensionless		
$\varkappa$	Isentropic exponent	Dimensionless		
μ^*	Dynamic viscosity of the gas at nozzle throat	$ML^{-1}T^{-1}$	Pa•s	lbm/ft-sec
μ_0	Dynamic viscosity of the gas at stagnation conditions	$ML^{-1}T^{-1}$	Pa•s	lbm/ft-sec
ϱ_0	Gas density at stagnation conditions at nozzle inlet	ML^{-3}	$kg \cdot m^{-3}$	lbm/ft^3
ϱ^*	Gas density at nozzle throat	ML^{-3}	$kg \cdot m^{-3}$	lbm/ft^3
σ	Standard deviation	. . .	. . .	. . .

Copyright ASME International
Provided by IHS under license with ASME
No reproduction or networking permitted without license from IHS
Not for Resale

TABLE 1 SYMBOLS (CONT'D)

Symbol	Description	Dimensions [Note (1)]	SI (Metric) Unit	US (Customary) Unit
Superscript				
*	Value at the nozzle throat at critical flow			
Subscripts				
0	Stagnation property			
1	Nozzle inlet			
2	Nozzle exit			
a	Upstream static condition			
d	Nozzle throat			
i	Isentropic			
j	Any location			
m	Mass			
*	Critical flow			

NOTE:
(1) Fundamental dimensions: M = mass; L = length; T = time; θ = temperature.

at nozzle inlet stagnation condition. The characteristic dimension is taken as the throat diameter at working conditions. Nozzle throat Reynolds number can be determined from:

$$\mathrm{Re}_d = \frac{4q_m}{\pi d \mu_0}$$

isentropic exponent $\varkappa$ — the thermodynamic state property defined by

$$\frac{\varrho}{p}\left(\frac{\partial p}{\partial \varrho}\right)_s = \frac{\varrho v^2}{p} = \varkappa$$

where p and ϱ are the absolute static pressure and density, respectively; v is the local speed of sound; and s refers to constant entropy.

For a perfect gas (see Note),this exponent $\varkappa$ is the same as the ratio of specific heats γ and is equal to $\frac{5}{3}$ for monatomic gases, $\frac{7}{5}$ for diatomic gases and $\frac{9}{7}$ for triatomic gases, etc.

NOTE: In real gases, the forces exerted between molecules, as well as the volume occupied by the molecules, have a significant effect on gas behavior. In a perfect gas, intermolecular forces and the volume occupied by the molecules are neglected.

discharge coefficient — the dimensionless ratio of the actual flow rate to the ideal flow rate that would be obtained with one-dimensional isentropic flow for the same upstream stagnation conditions. This coefficient corrects for viscous and flow field curvature effects. For the nozzle design and installation conditions specified in this Standard, it is a function of the throat Reynolds number only.

critical flow — the maximum flow rate for a particular venturi nozzle that can exist for the given upstream conditions. When critical flow exists, the throat velocity is equal to the local value of the speed of sound (acoustic velocity), the velocity at which small pressure disturbances propagate.

isentropic perfect gas critical flow function — a dimensionless function that characterizes the thermodynamic flow properties along an isentropic and

Copyright ASME International
Provided by IHS under license with ASME
No reproduction or networking permitted without license from IHS

Not for Resale

one-dimensional path between inlet and throat. It is a function of the nature of the gas and of stagnation conditions.

$$C_{*i} = \sqrt{\gamma\left(\frac{2}{\gamma + 1}\right)^{(\gamma + 1)/(\gamma - 1)}}$$

isentropic real gas critical flow function — a dimensionless function that characterizes the thermodynamic flow properties of a real gas along an isentropic one-dimensional path between the nozzle inlet and throat. It is a function of the nature of the real gas and of the stagnation conditions. The function is the isentropic perfect gas critical flow function divided by the square root of the compressibility factor for the real gas.

$$C_{Ri} = C_{*i}/\sqrt{Z}$$

real gas critical flow coefficient — a flow coefficient defined by the equation shown below

$$C_R = \frac{q_m\sqrt{(R/M)\,T_0}}{A^*\ P_0}$$

The real gas critical flow coefficient is often estimated by the isentropic real gas critical flow function. A method of computing C_R is presented in Appendix E along with some references for a selection of fluids. Appendix D presents a discussion of the various critical flow functions and coefficients.

critical pressure ratio — the ratio of the absolute static pressure at the nozzle throat to the absolute stagnation pressure for which gas mass flow through the nozzle is a maximum

choking pressure ratio — the ratio of the absolute nozzle exit static pressure to the absolute nozzle upstream pressure at which the flow becomes critical

Mach number — the ratio of the fluid velocity to the velocity of sound in the fluid at the same temperature and pressure

3 BASIC EQUATIONS

3.1 State Equation

The behavior of a real gas can be described by:

$$p/\varrho = (R/M)TZ$$

3.2 Flow Rate in Ideal Conditions

Ideal critical flow rates require three main conditions:

(*a*) the flow is one-dimensional;
(*b*) the flow is isentropic; and
(*c*) the gas is perfect ($Z = 1$ and $\varkappa = \gamma$).

Under these conditions, the value of critical flow rate is

$$q_{mi} = \frac{A^* C_{*i} P_0}{\sqrt{(R/M)T_0}}$$

or

$$q_{mi} = A^* C_{*i}\sqrt{(P_0\varrho_0)}$$

where

$$C_{*i} = \sqrt{\gamma\left(\frac{2}{\gamma + 1}\right)^{(\gamma + 1)/(\gamma - 1)}}$$

3.3 Flow Rate in Real Conditions

For the critical flow of real gases the foregoing formulae become

$$q_m = \frac{A^* C C_R P_0}{\sqrt{(R/M)T_0}}$$

or

$$q_m = A^* C C_R\sqrt{Z_0(P_0\varrho_0)}$$

In practice sometimes C_R is estimated by C_{Ri}. However, it should be noted that C_{Ri} and C_{*i} are not equal to C_R because the gas is not perfect and C is less than unity since the flow is not one-dimensional and a boundary layer exists due to viscous effects.

4 APPLICATIONS FOR WHICH THE METHOD IS SUITABLE

Each application should be evaluated to determine whether a critical flow venturi nozzle or some other device is more suitable. An important consideration is that the flow through the venturi nozzle is independent of the downstream pressure within the pressure

Copyright ASME International
Provided by IHS under license with ASME
No reproduction or networking permitted without license from IHS

Not for Resale

range for which the venturi nozzle can be used for critical flow measurement. The following are some other considerations.

(*a*) For critical flow nozzles, the only measurements required are the pressure and temperature or density upstream of the critical venturi nozzle, as the throat conditions can be calculated from thermodynamic considerations. Care must be taken when using an equation of state at or near the dew point of the gas. However, no evidence has been presented that would indicate that the correct operation of the critical flow nozzle is affected. Furthermore, studies have shown that condensation rates in the presence of favorable pressure gradients and rapidly falling temperatures are much slower than the transit time of the fluid from the nozzle entrance to the nozzle throat. Therefore, the critical flow nozzle will operate correctly and yield the correct flow, provided that the calculation for the speed of sound and density at the throat is correct.

(*b*) The velocity in the critical venturi nozzle throat is the maximum possible for the given upstream stagnation conditions; therefore, the sensitivity to installation effects is minimized, except for swirl, which must not exist in the inlet part of the venturi nozzle.

(*c*) When comparing sonic venturi nozzles with subsonic pressure difference meters, it can be noted that in the case of the critical nozzle, the flow is directly proportional to the nozzle upstream stagnation pressure and not, as in the case of the subsonic meter, to the square root of a measured differential pressure.

(*d*) The maximum flow range that can be obtained for a given critical venturi nozzle is generally limited to the range of inlet pressures that are available above the inlet pressure at which the flow becomes critical.

(*e*) The most common applications of critical flow venturi nozzles have been for test, calibration of other meters, and flow control applications.

5 STANDARD CRITICAL FLOW VENTURI NOZZLES

5.1 General Requirements

5.1.1 The venturi nozzle shall be inspected to determine conformance to this Standard.

5.1.2 The venturi nozzle shall be manufactured from material suitable for the intended application. The following are some considerations.

(*a*) The material should be capable of being finished to the required condition. Some materials are unsuitable because of pits, voids, and other nonhomogeneities.

(*b*) The material, together with any surface treatment used, shall not be subject to corrosion in the intended service.

(*c*) The material should be dimensionally stable and should have known and repeatable thermal expansion characteristics (if it is to be used at a temperature other than that at which the throat diameter has been measured), so that appropriate throat diameter correction can be made.

5.1.3 The throat and toroidal inlet up to the conical divergent section of the venturi nozzle shall be smoothly finished so that the arithmetic average roughness height does not exceed $15 \times 10^{-6}d$.

5.1.4 The throat and toroidal inlet up to the conical divergent section shall be free from dirt, films, or other contamination.

5.1.5 The form of the conical divergent portion of the venturi nozzle shall be controlled such that any steps, discontinuities, irregularities, and lack of concentricity shall not exceed 1% of the local diameter. The arithmetic average roughness of the conical divergent section shall not exceed $10^{-4}d$.

5.2 Standard Venturi Nozzles

Two different designs are possible for standard venturi nozzles.

5.2.1 Toroidal Throat Venturi Nozzle

5.2.1.1 The venturi nozzle shall conform to Fig. 1.

5.2.1.2 For purposes of locating other elements of the venturi nozzle critical flow metering system, the inlet plane of the venturi nozzle shall be defined as that plane perpendicular to the axis of symmetry which intersects the inlet at a diameter equal to $2.5d \pm 0.1d$.

5.2.1.3 The convergent part of the venturi nozzle (inlet) shall be a portion of a torus that shall extend through the minimum area section (throat) and shall be tangent to the divergent section. The contour of the inlet upstream of a diameter equal to $2.5d$ is not specified, except that the surface at each axial location shall have a diameter equal to or greater than the extension of the toroidal contour.

5.2.1.4 The inlet toroidal surface of the venturi nozzle beginning at a diameter of $2.5d$ perpendicular to the axis of symmetry (see Fig. 1) and extending to the point of tangency shall not deviate from the shape

Copyright ASME International
Provided by IHS under license with ASME
No reproduction or networking permitted without license from IHS

Not for Resale

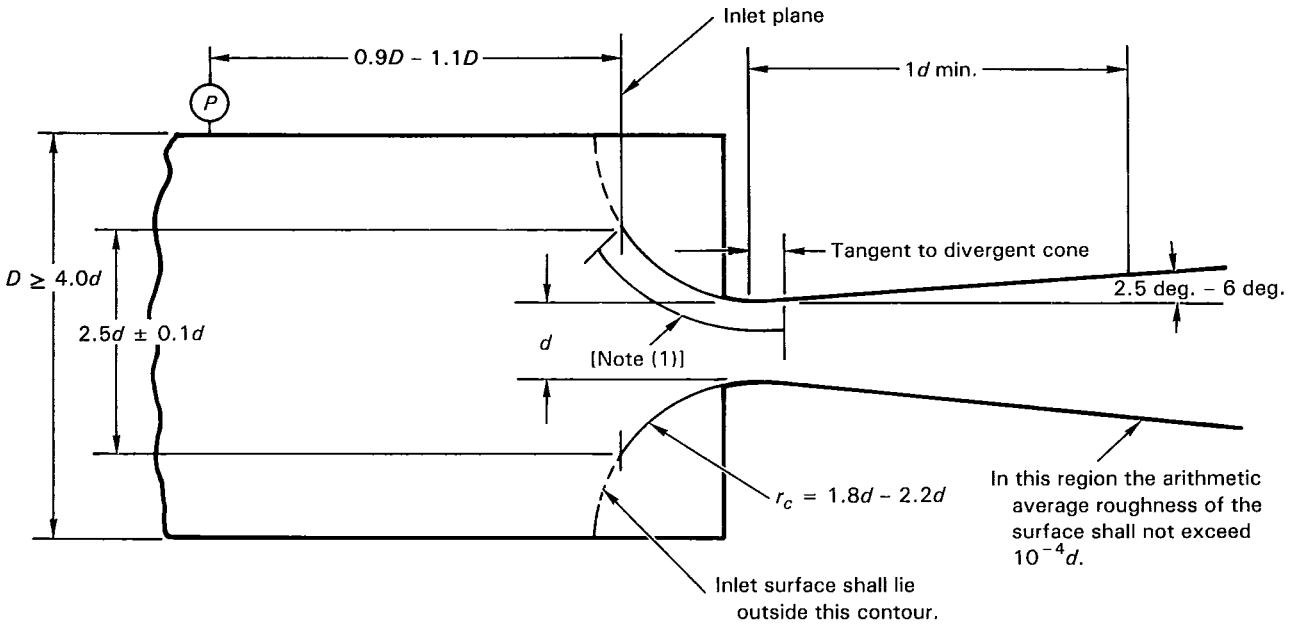

NOTE:
(1) In this region the surface shall not exceed $15 \times 10^{-6}d$ arithmetic average roughness and the contour shall not deviate from toroidal form by more than $0.001d$.

FIG. 1 TOROIDAL THROAT VENTURI NOZZLE

of a torus by more than $\pm 0.001d$. The radius of curvature of this toroidal surface in the plane of symmetry shall be $1.8d$ to $2.2d$.

5.2.1.5 The divergent portion of the venturi nozzle downstream of the point of tangency with the torus shall form a frustum of a cone with a half-angle of 2.5 deg. to 6 deg. The length of the conical section shall not be less than the throat diameter.

5.2.2 Cylindrical Throat Venturi Nozzle

5.2.2.1 The venturi nozzle shall conform to Fig. 2.

5.2.2.2 The inlet plane is defined as that plane tangent to the inlet contour of the venturi nozzle and perpendicular to the nozzle center line.

5.2.2.3 The convergent part of the venturi nozzle (inlet) shall be a quarter of a torus tangent to the inlet plane and to the cylindrical throat. The length and the diameter of the cylindrical throat shall be equal to the radius of curvature of the convergent part of the nozzle.

5.2.2.4 The inlet toroidal surface of the venturi nozzle shall not deviate from the shape of a torus by more than $\pm 0.001d$.

5.2.2.5 The throat diameter shall be the mean of at least four diameters measured at approximately equal angles to each other at the exit plane of the cylindrical throat. Any diameter within the cylindrical throat shall not differ from the mean diameter by more than $0.001d$. The throat diameter so determined shall be used in all flow computations.

The length of the throat shall not deviate from the throat diameter by more than $0.05d$.

The transition between the convergent section and the throat shall be inspected visually and no defect should be observed. When a defect of transition is observed, it must be checked that the local radius of curvature in a plane in which the axis of symmetry lies is never lower than $0.5d$ all along the inlet surface (convergent section and cylindrical throat). The whole inlet surface must be properly polished so that the arithmetic average roughness height does not exceed $15 \times 10^{-6}d$.

The transition between the cylindrical throat and the conical divergent section shall also be visually inspected and no defect shall be observed.

5.2.2.6 The divergent section of the venturi nozzle shall be a frustum of a cone with a half-angle of 3.5 ± 0.5 deg. The length of the divergent section shall not be less than the throat diameter.

Copyright ASME International
Provided by IHS under license with ASME
No reproduction or networking permitted without license from IHS
Not for Resale

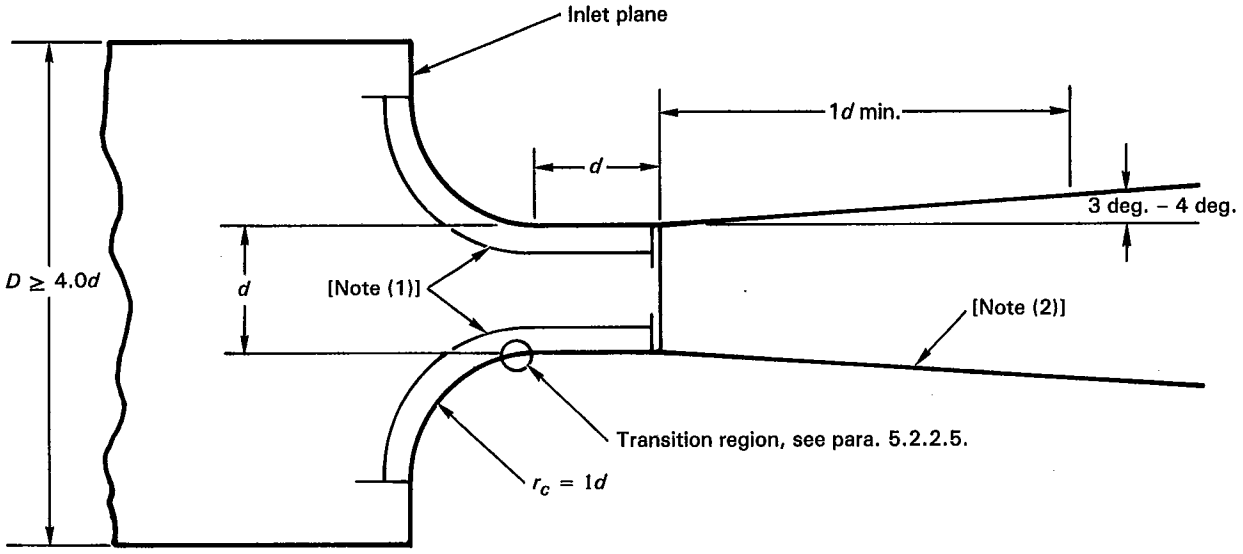

NOTES:
(1) In this region the arithmetic average surface roughness shall not exceed $15 \times 10^{-6}d$, and the contour shall not deviate from toroidal and cylindrical form by more than $0.001d$.
(2) In the conical divergent section arithmetic average of the relative roughness shall not exceed $10^{-4}d$.

FIG. 2 CYLINDRICAL THROAT VENTURI NOZZLE

6 INSTALLATION REQUIREMENTS

6.1 General

This Standard covers installation when either:

(*a*) the pipeline upstream of the nozzle is of circular cross section; or

(*b*) it can be assumed that there is a large space upstream of the venturi nozzle.

For case (a), the primary device shall be installed in a system meeting the requirements of para. 6.2. For case (b), the primary device shall be installed in a system meeting the requirements of para. 6.3. In both cases swirl must not exist upstream of the venturi nozzle. Where a pipeline exists upstream of the nozzle, swirl-free conditions can be ensured by installing a flow straightener of the design shown in Fig. 3 at a distance $>5D$ upstream of the nozzle inlet plane.

6.2 Upstream Pipeline

The primary device may be installed in a straight circular conduit which shall be concentric within $0.02D$ with the center line of the venturi nozzle. The inlet conduit up to $3D$ upstream of the venturi nozzle shall not deviate from circularity by more than $0.01D$ and shall have an arithmetic average roughness height which shall not exceed $10^{-4}D$. In order to meet the coefficient specifications of this Standard the diameter of the inlet conduit shall be a minimum of $4d$. It should be noted that the use of β ratios larger than 0.25 increases the effect of upstream disturbances, and moreover, makes corrections necessary to the measured pressure and temperature (see para. 7.5).

6.3 Large Upstream Space

It can be assumed that there is a large space upstream of the primary device if there is no wall closer than $5d$ to the axis of the primary device or to the inlet plane of the primary device (as defined in paras. 5.2.1.2 or 5.2.2.2).

6.4 Downstream Requirements

No requirements are imposed on the outlet conduit except that it shall not restrict the flow so as to prevent critical flow in the venturi nozzle.

6.5 Pressure Measurement

6.5.1 When a circular conduit is used upstream of the primary device, the upstream static pressure shall preferably be measured at wall pressure taps located $0.9D$–$1.1D$ from the inlet plane of the venturi nozzle (see Fig. 1). The pressure tap may be located upstream or downstream of this position, provided it has been

Copyright ASME International
Provided by IHS under license with ASME
No reproduction or networking permitted without license from IHS
Not for Resale

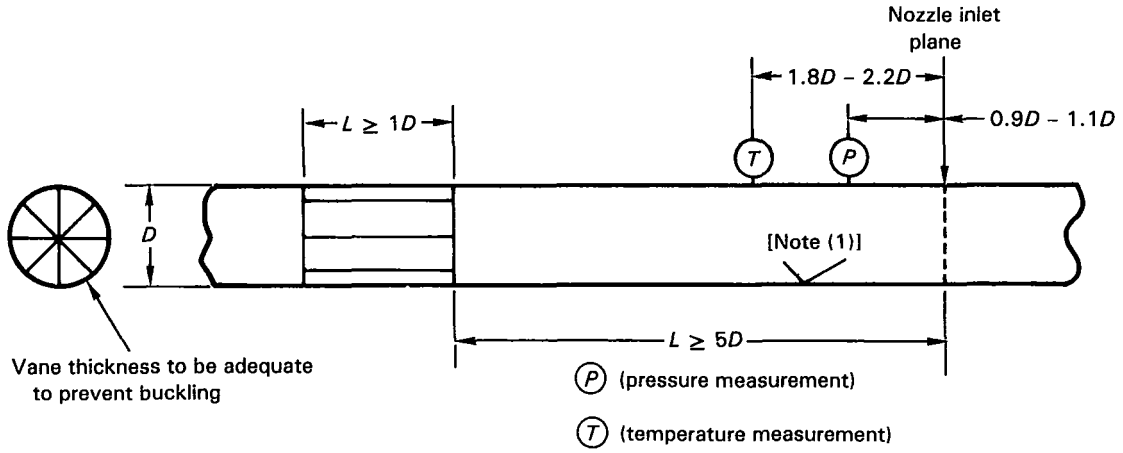

NOTE:
(1) Surface roughness shall not exceed $10^{-4}D$.

FIG. 3 INSTALLATION REQUIREMENTS FOR AN UPSTREAM PIPEWORK CONFIGURATION

demonstrated that the measured pressure can be used to reliably give the nozzle inlet stagnation pressure.

6.5.2 When it can be assumed that there is a large space upstream of the primary device, the upstream pressure tap shall preferably be located in a wall perpendicular to the inlet face of the primary device and within a distance of $10d \pm 1d$ from that plane. The pressure may be located upstream or downstream of this position, provided it has been demonstrated that the pressure measured can be used to reliably give the nozzle inlet stagnation pressure.

6.5.3 For the pressure taps mentioned in para. 6.5.1, and preferably in paras. 6.5.2 and 6.5.4, the center line of the pressure tap shall meet the center line of the primary device and be at right angles to it. At the point of the breakthrough the hole shall be circular. The edges shall be free from burrs and be square or lightly rounded to a radius not exceeding 0.1 diameter of the pressure tap. Conformity of the pressure taps, with the two foregoing descriptions, is to be judged by visual inspection. When an upstream pipeline is used, the diameters of pressure taps shall be less than $0.05D$, and preferably 1.3 ± 0.3 mm (0.05 ± 0.02 in.). The pressure tap shall be cylindrical for a minimum length of two tap diameters (see Fig. 4).

6.5.4 The downstream pressure will be measured to ensure that critical flow is maintained. The pressure must be measured by a conduit wall tap located within 0.5 conduit diameters of the exit plane of the nozzle to utilize the critical pressure ratios specified in para. 7.5.

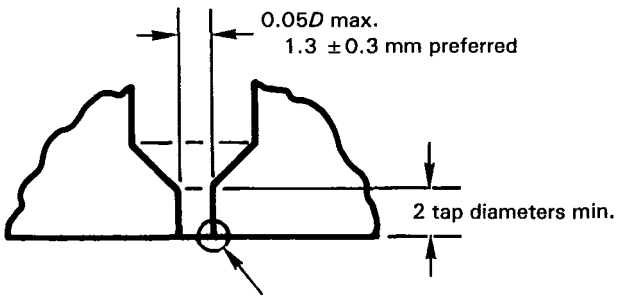

FIG. 4 DETAIL OF PRESSURE TAP

The tap may be located at another location, provided it can be shown that critical flow has been achieved. Locating the tap farther downstream will place the pressure measurement in the pressure recovery region of the conduit. This will cause an increased downstream pressure reading. An increased downstream pressure reading will have the effect of decreasing the measured pressure differential. In order to obtain the specified pressure drop, an operator will then be forced to increase the total pressure drop through the nozzle, even though this is not required to ensure critical flow. At sufficiently long distances away from the nozzle exit, pipe losses will reduce the pressure and thus the measured pressure differential. This reduction could be large enough to indicate critical flow without it actually existing. Therefore, locating the

Copyright ASME International
Provided by IHS under license with ASME
No reproduction or networking permitted without license from IHS
Not for Resale

ASME MFC-7M 87 ■ 0759670 0049515 T ■

pressure measurement outside the 0.5 conduit diameter requires detailed information about the piping system that cannot be specified in this Standard or accounted for in a general form of pressure drop equation as is presented in para. 7.5.

6.5.5 In some applications, the outlet pressure can be determined without a pressure tap. For example, the venturi nozzle may discharge directly into the atmosphere or other region of known pressure. In these applications, the outlet pressure need not be measured.

6.6 Drain Holes

The conduit may be provided with drain holes for the removal of condensate or other foreign substances that may collect in some applications. There must be no flow through these drain holes while the flow measurement is in progress. If drain holes are required, they shall be located upstream of the nozzle upstream pressure tap. The diameter of the drain holes should be smaller than $0.06D$. The axial distance from the drain hole to the plane of the upstream pressure tap shall be greater than $1D$ and the hole shall be located in a different plane from that of the pressure tap.

6.7 Temperature Measurement

The inlet temperature shall be measured by one or more sensors located upstream of the venturi nozzle. When an upstream pipeline is used, the recommended location is $2D$ upstream of the venturi nozzle. The diameter of the sensing element shall not be larger than $0.04D$ and the element shall not be aligned with a pressure tap in the flow direction. The sensor may be located still farther upstream, provided it has been demonstrated that the measured temperature can be used to reliably give the nozzle inlet stagnation temperature. Particular care must be exercised in the selection of the temperature sensor if the stagnation temperature of the flowing gas differs from the pipeline wall by more than 5 K. In these cases, the sensor selected must be appropriately insensitive to radiation error.

6.8 Density Measurement

For some applications, it may be desirable to directly measure the density at nozzle inlet, for instance, when the molecular mass of the gas is not known with a sufficient accuracy.

When a densitometer is used, it shall be installed upstream of the nozzle and of the upstream pressure and temperature taps. To undertake correct measurement of inlet density, particular attention shall be given to the following points.

(*a*) The installation of the densitometer shall not disturb the pressure and temperature measurements.

(*b*) When the densitometer is located outside of the main upstream pipe, checks shall be carried out to ensure that the gas in the device is the same as the gas flowing in the main conduit.

(*c*) Pressure and temperature conditions at the densitometer should be as close as possible to the nozzle inlet conditions to avoid corrections. If necessary, the inlet density shall be computed from the measured density using the equation of state. If j is the subscript relative to the densitometer:

$$\varrho_0 = \varrho_j \frac{P_0}{P_j} \frac{T_j}{T_0} \frac{Z_j}{Z_0}$$

7 CALCULATION METHODS

7.1 Method of Mass Flow Rate Computation

The actual mass flow rate shall be computed from the following equations:

$$q_m = A^* C C_R P_0 / \sqrt{(R/M)\, T_0}$$

or

$$q_m = A^* C C_R \sqrt{(Z_0 P_0 \varrho_0)}$$

7.2 Discharge Coefficient

7.2.1 The discharge coefficient depends largely on the shape of the venturi nozzle, and it shall be noted that, at small values of throat diameters, the nozzle geometry is very difficult to control and measure.

7.2.2 The discharge coefficient for the venturi nozzle may be obtained from the following equation:

$$C = a - b\mathrm{Re}_d^{-n}$$

Copyright ASME International
Provided by IHS under license with ASME
No reproduction or networking permitted without license from IHS

Not for Resale

The coefficients are given in the following table for each type of venturi nozzle.

Toroidal Throat

$10^5 < \mathrm{Re}_d < 10^7$

$$a = 0.9935$$
$$b = 1.525$$
$$n = 0.5$$

Cylindrical

$3.5 \times 10^5 < \mathrm{Re}_d < 2.5 \times 10^6$

$$a = 0.9887$$
$$b = n = 0$$

$2.5 \times 10^6 < \mathrm{Re}_d < 2 \times 10^7$

$$a = 1$$
$$b = 0.2165$$
$$n = 0.2$$

7.2.3 The uncertainty at a 95% confidence level for the discharge coefficients obtained from para. 7.2.2 for both types of nozzles is ±0.5%.

A table of discharge coefficients is given in Appendix A.

7.2.4 For maximum accuracy, the discharge coefficients may be obtained experimentally.

7.3 Computation of Real Gas Critical Flow Coefficient

The value of C_R used to calculate gas mass flow rate may be computed using any method of demonstrable accuracy. The value of C_R may be determined from the relationship

$$C_R = P^* V^* \sqrt{(R/M)\, T_0}\, / P_0$$
$$= P^* V^* / \sqrt{Z_0 P_0 \varrho_0}$$

7.4 Conversion of Measured Pressure and Temperature to Stagnation Conditions

Inlet stagnation pressure may be determined from the relationship

$$\frac{P_0}{P_1} = \left(1 + \frac{\varkappa - 1}{2} \mathrm{Ma}_1^2\right)^{\varkappa/(\varkappa-1)}$$

Most temperature measurements for fluid flow are made by inserting a probe into the flow line. It is assumed that the probe will yield the temperature T_1 in the equation in para. 7.4. However, the temperature will be a function of the probe design, the fluid properties, the flow field at the probe, and the wall temperature (see para. 6.7). The indicated temperature of the probe will be somewhere between the actual flowing temperature T_1 and the stagnation temperature T_0. In most cases this effect will be small, considering the restrictions given on the ratio of the upstream pipe diameter and the nozzle throat diameter.

Inlet stagnation temperature may be determined from

$$\frac{T_0}{T_1} = 1 + \frac{\varkappa - 1}{2} \mathrm{Ma}_1^2 \alpha$$

NOTE: α is a constant for a given temperature probe. α may have any value from 0 to 1 with most probes used in this application having a value of 0.25.

7.5 Maximum Permissible Downstream Pressure

For venturi nozzles operating at throat Reynolds numbers greater than 2×10^5, and with cones longer than $1d$, the maximum permissible downstream pressure is determined from the relationship

$$(P_2/P_0)_{\max} = 0.8\left[(P_2/P_0)_i - r_*\right] + r_*$$

and

$$r_* = \left(\frac{2}{\varkappa + 1}\right)^{\varkappa/(\varkappa - 1)}$$

The value of $(P_2/P_0)_i$ is determined from the isentropic ideal gas relationships as a function of area ratio of the divergent section. Values of $(P_2/P_0)_{\max}$ may be found from Fig. 5. Higher back pressure ratios than shown can be used, provided it can be verified that the flow is critical. The pressure ratio P_2/P_0 is not significantly affected by extending the cone length such that the exit area is greater than four times the throat area, i.e., beyond seven diameters for a cone half-angle of 4 deg.

8 UNCERTAINTIES IN THE MEASUREMENT OF FLOW RATE

Uncertainty calculations shall be performed in accordance with ANSI/ASME MFC-2M-1983,

Copyright ASME International
Provided by IHS under license with ASME
No reproduction or networking permitted without license from IHS
Not for Resale

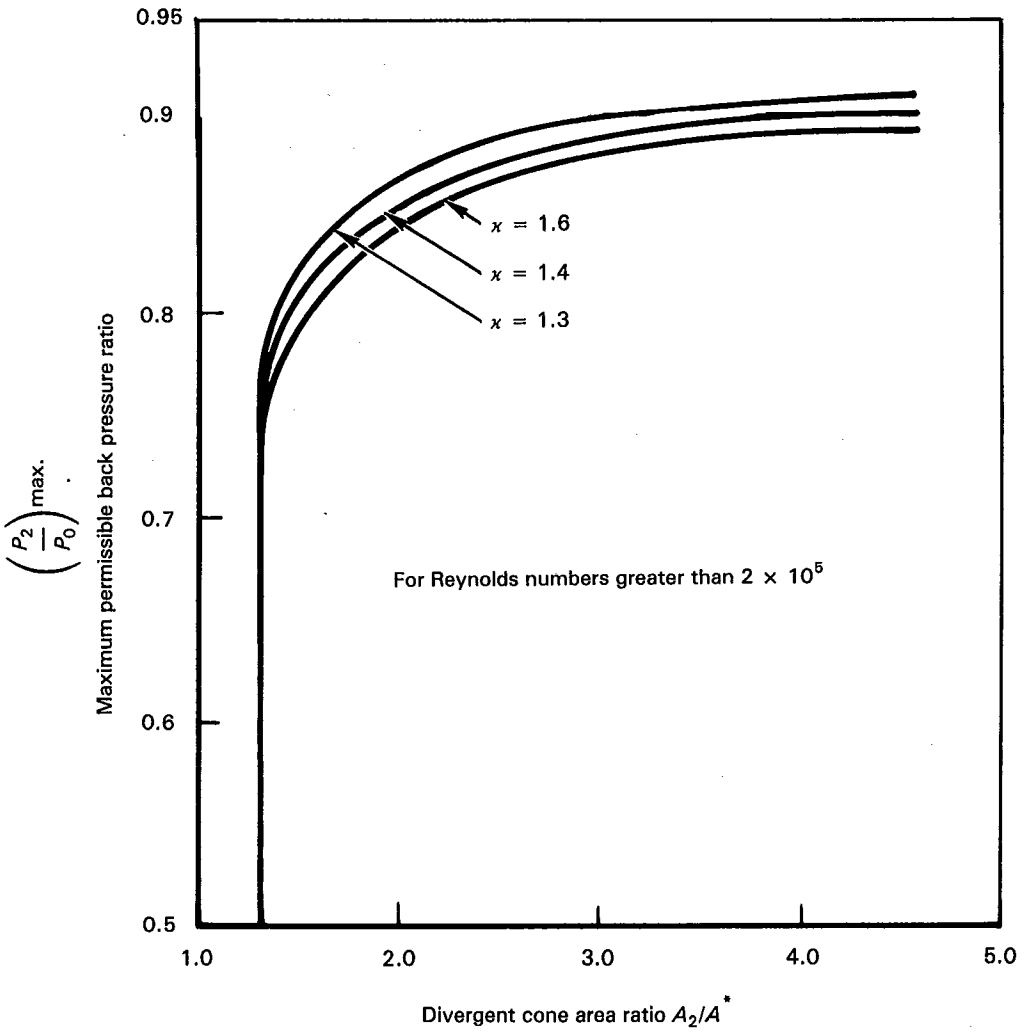

FIG. 5 MAXIMUM PERMISSIBLE BACK PRESSURE RATIO FOR CRITICAL FLOW VENTURI NOZZLES

Measurement Uncertainty for Fluid Flow in Closed Conduits.

For the purpose of this Standard, as in ANSI/ASME MFC-2M–1983, the uncertainty interval is defined as an estimate of the error band, centered about the measurement within which the true value must fall with high probability.

The uncertainty U can be expressed in absolute or relative terms. The uncertainty interval is centered about the results of the flow measurement and is defined as $q_m \pm U$. The uncertainty U may be either

$$U_{ADD} = U_{99} = (B + t_{95} \times \sigma)$$

or

$$U_{RSS} = U_{95} = \sqrt{B^2 + (t_{95} \times \sigma)^2}$$

The bias B is an estimate of the upper limit of the true bias error, and the precision σ is the sample standard deviation.

The statistical parameter, t_{95}, is defined and tabled in ANSI/ASME MFC-2M–1983. When σ is based on a large sample, greater than 30, t_{95} is set equal to 2.0.

NOTE: For a comprehensive presentation of bias, precision, and uncertainty, see ANSI/ASME MFC-2M–1983. This Standard also includes several flow measurement uncertainty examples.

Copyright ASME International
Provided by IHS under license with ASME
No reproduction or networking permitted without license from IHS

Not for Resale

APPENDIX A
VENTURI NOZZLE DISCHARGE COEFFICIENTS

(This Appendix contains supplementary information for the convenience of the reader. It is not a part of ASME/ANSI MFC-7M–1987.)

The discharge coefficients given in this Standard are based on experimental data. Two venturi designs are given with their appropriate discharge coefficients, as shown tabulated in Tables A1 and A2. Experimental determination of the discharge coefficient for a venturi nozzle that is manufactured in strict accordance with this Standard is not necessary, provided that one is certain that the specifications are followed, and is satisfied with the stated uncertainty limits. If one wishes less uncertainty in the flow measurement then flow calibration is recommended. Depending on the intended operating flow rate range of the venturi nozzle a calibration laboratory should be able to provide discharge coefficients to an uncertainty of about ± 0.25%.

Discharge coefficients for the toroidal throat nozzle design may be determined by theoretical calculation. The coefficients so obtained agree well with experimental data. Because of the relative ease of calculation of the theoretical coefficient and its agreement with experimental data, some investigators favor this design over the cylindrical throat design. Typical equations for the theoretical discharge coefficient of the toroidal throat nozzle are given below, and a comparison to the values recommended in this Standard is presented in Table A3.

TABLE A1 TOROIDAL THROAT VENTURI NOZZLE DISCHARGE COEFFICIENT

Reynolds Number Re_d	Discharge Coefficient
1×10^5	0.9887
2	0.9901
3	0.9907
5	0.9913
7	0.9917
1×10^6	0.9920
2	0.9924
3	0.9926
5	0.9928
7	0.9929
1×10^7	0.9930

TABLE A2 CYLINDRICAL THROAT VENTURI NOZZLE DISCHARGE COEFFICIENT

Reynolds Number Re_d	Discharge Coefficient
3.5×10^5	0.9887
5	0.9887
2×10^6	0.9887
3	0.9890
5	0.9901
7	0.9907
1×10^7	0.9914
2	0.9925

EQUATIONS FOR CALCULATING A THEORETICAL DISCHARGE COEFFICIENT FOR A TOROIDAL THROAT NOZZLE

(*a*) Assumed laminar flow at the throat (see Reference [2] in Appendix B).

$$C_d = 0.99844 - 3.032\,(\mathrm{Re}_d)^{-0.5}$$

(*b*) Assumed turbulent flow at the throat (see Reference [2] in Appendix B).

$$C_d = 0.99844 - 0.06927\,(\mathrm{Re}_d)^{-0.2}$$

Copyright ASME International
Provided by IHS under license with ASME
No reproduction or networking permitted without license from IHS
Not for Resale

TABLE A3 COMPARISON OF THEORETICAL AND EXPERIMENTAL DISCHARGE COEFFICIENTS FOR THE TOROIDAL THROAT NOZZLE

Throat Reynolds Number	Standard Coefficient	Theoretical Laminar Flow Coefficient	Theoretical Turbulent Flow Coefficient	Percent Diff. Laminar Flow	Percent Diff. Turbulent Flow
1×10^5	0.9887	0.9889	0.9915	0.02	0.29
2	0.9901	0.9917	0.9924	0.16	0.23
3	0.9907	0.9929	0.9929	0.22	0.22
4	0.9911	0.9937	0.9932	0.26	0.21
5	0.9913	0.9942	0.9934	0.28	0.21
6	0.9915	0.9945	0.9936	0.30	0.21
7	0.9917	0.9948	0.9936	0.32	0.21
8	0.9918	0.9951	0.9939	0.33	0.21
9	0.9919	0.9952	0.9940	0.34	0.21
1×10^6	0.9919	0.9954	0.9941	0.35	0.21
2	0.9924	0.9963	0.9946	0.39	0.22
3	0.9926	0.9967	0.9949	0.41	0.23
4	0.9927	0.9969	0.9951	0.42	0.24
5	0.9928	0.9971	0.9953	0.43	0.25
6	0.9929	0.9972	0.9954	0.44	0.25
7	0.9929	0.9973	0.9955	0.44	0.26
8	0.9929	0.9974	0.9956	0.44	0.26
9	0.9930	0.9974	0.9956	0.45	0.27
1×10^7	0.9930	0.9975	0.9957	0.45	0.27

Copyright ASME International
Provided by IHS under license with ASME
No reproduction or networking permitted without license from IHS
Not for Resale

APPENDIX B

REFERENCES FROM WHICH STANDARD CRITICAL FLOW VENTURI NOZZLE DISCHARGE COEFFICIENTS WERE OBTAINED

(This Appendix contains supplementary information for the convenience of the reader. It is not a part of ASME/ANSI MFC-7M–1987.)

B1 TOROIDAL THROAT NOZZLES

[1] Brain, T. J. S., and L. M. MacDonald, "Evaluation of the Performance of Small-Scale Critical Flow Venturi Using the NEL Gravimetric Gas Flow Standard Test Facility," *Fluid Flow Measurement in the Mid 1970's,* HMSO, Edinburgh, 1977: 103–125.

[2] Brain, T. J. S., and J. Reid, "Primary Calibration of Critical Flow Venturis in High-Pressure Gas," *Flow Measurement of Fluids,* H. H. Dijstelbergen and E. A. Spencer, eds, North Holland Publishing Co., Amsterdam, 1978: 54–64.

[3] Smith, R. E., and R. J. Matz, "A Theoretical Method of Determining Discharge Coefficients for Venturis Operating at Critical Flow Conditions," *Journal of Basic Engineering,* 84(4) (1962): 434–446.

[4] Arnberg, B. T., C. L. Britton, and W. F. Seidl, "Discharge Coefficient Correlations for Circular Arc Venturi Flowmeters at Critical (Sonic) Flow," Paper No. 73-WA/FM-8, American Society of Mechanical Engineers, New York, 1973.

[5] Brain, T. J. S., and J. Reid, "An Investigation of the Discharge Coefficient Characteristics and Manufacturing Specification of Toroidal Inlet Critical Flow Venturi Nozzles Proposed as Standard ISO Flowmeters," Paper C1 of the International Conference on Advances in Flow Measurement, University of Warwick, BHRA Fluid Engineering, Cranfield, Bedford, 1981.

[6] Spencer, E. A., E. Eujen, H. H. Dijstelbergen, and G. Peignelin, "Intercomparison Campaign on High-Pressure Gas Flow Test Facilities," EEC Document No. EUR 6662, ECSC-EEC-EAEC, Brussels, Luxembourg, 1980.

B2 CYLINDRICAL THROAT NOZZLES

[1] Greiner, P., "Discharge Coefficients of Cylindrical Nozzles Used in Sonic Conditions," Paper No. 1.2 NEL Fluid Mechanics Silver Jubilee Conference, National Engineering Laboratory, East Kilbride, Glasgow, November 1979.

[2] Peignelin, G., and A. Benzoni, "Utilisation des Tuyères Venturi Fonctionnant en Regime d'Écoulement Sonique Comme Étalons de Débit de Gaz Sous Pression," Note from Gaz de France, No. 67842, 1967.

[3] Peignelin, G., and P. Greiner, "Etude du Coefficient de Décharge des Tuyères Fonctionnant en Regime d'Écoulement Sonique au Col Utilisées Comme Étalon Pour le Mesurage de Débit de Gaz Sous Pression," Paper presented at the Association Techniques de Gaz de France Congress, 1978.

[4] Greiner, P., "Etude Statistique du Coefficient de Décharge des Tuyères a Col Cylindrique Fonctionnant en Regime Sonique," Note from Gaz de France, No. 81474, August 1981.

[5] Spencer, E. A., E. Eujen, H. H. Dijstelbergen, and G. Peignelin, "Intercomparison Campaign on High-Pressure Gas Flow Test Facilities," EEC Document No. EUR 6662, ECSC-EEC-EAEC, Brussels, Luxembourg, 1980.

Copyright ASME International
Provided by IHS under license with ASME
No reproduction or networking permitted without license from IHS
Not for Resale

APPENDIX C
EXAMPLE FLOW CALCULATION

(This Appendix contains supplementary information for the convenience of the reader. It is not a part of ASME/ANSI MFC-7M–1987.)

C1 THE FLOW RATE CALCULATION

This Appendix presents an example of how flow through a critical flow nozzle is computed. The nozzle is a toroidal throat design and is installed in a circular conduit as shown in Fig. C1.

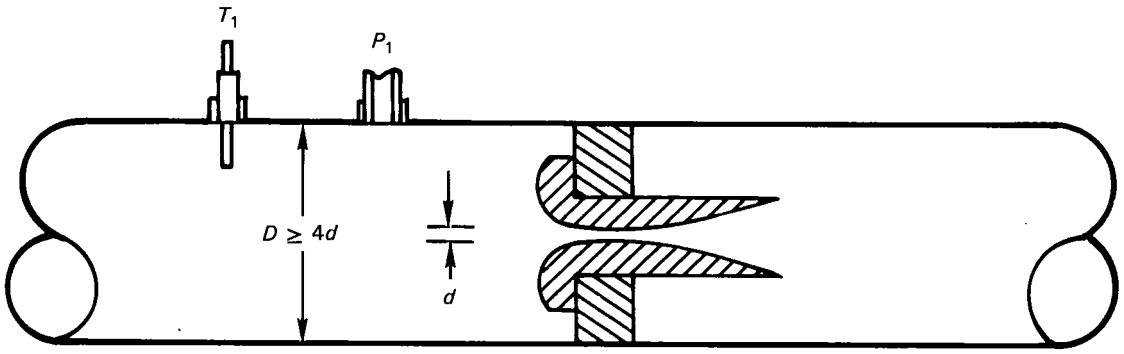

Nozzle throat diameter = 1 in. (2.54 cm)
Conduit diameter = 4 in. (10.16 cm)
Measured pressure (P_1) = 145 lb/in.^{2} (1 MPa)
Measured temperature (T_1) = 77°F (25°C)
Fluid = Methane, M = 16.043 lbm/lbm-mole (kg/kg•mole)
Gas constant (R) = 1.98586 BTU/lbm-mole-°R
= 8314.41 J/kg•mole•K

The throat Reynolds number $\mathrm{Re}_d = \dfrac{4q_m}{\pi d \mu_0}$

FIG. C1 SECTIONAL VIEW OF THE NOZZLE AND PIPE

Copyright ASME International
Provided by IHS under license with ASME
No reproduction or networking permitted without license from IHS
Not for Resale

From para. 7.1 the flow equation is

$$q_m = A^* C\, C_R\, P_0 / \sqrt{(R/M)\, T_0}$$

The equation for the discharge coefficient C is given in para. 7.2.2. Using this expression for C and that for the Reynolds number at the nozzle throat the flow rate may be expressed as follows:

$$q_m = A^* \left[0.9935 - 1.525 \left(\frac{4q_m}{\pi d \mu} \right)^{-1/2} \right] C_R \frac{P_0}{\sqrt{(R/M)\, T_0}}$$

This equation may be solved by first assuming that the Reynolds number is infinite and then iterating the solution using the calculated flow.

For an infinite Reynolds number

$$q_m = \frac{\pi d^2}{4} (0.9935)\, (C_R) \frac{P_0}{\sqrt{(R/M)\, T_0}}$$

(US)

$$= \frac{\pi(1)^2}{4} (0.9935)\, (C_R) \frac{(145)\sqrt{g_c}}{\sqrt{(1.98586)\,(459.67 + 77)\,(778.2)/16.043}}$$

(SI)

$$= \frac{\pi(2.54)^2}{4\,(100)^2} (0.9935)\, (C_R) \frac{1 \times 10^6}{\sqrt{(8314.41)\,(273.15 + 25)/16.043}}$$

where the factor g_c is included for consistency of units.[1]

Using the value of C_R obtained from the tables in Appendix E ($C_R = 0.6754$):

(US)

$$q_m = 1.9064 \text{ lbm/sec}$$

(SI)

$$q_m = 0.8649 \text{ kg/s}$$

[1]The numerical value of g_c is 32.174 lbm-ft/lbf-sec^2.

Copyright ASME International
Provided by IHS under license with ASME
No reproduction or networking permitted without license from IHS
Not for Resale

Substituting this value into the expression for the Reynolds number [using 2.1×10^{-7} $\frac{\text{lbf-sec}}{\text{ft}^2}$ (1.005×10^{-5} Pa•s) for the viscosity]

(US)

$$\text{Re}_d = \frac{(4)\,(1.9064)\,(12)}{(32.174)\,(\pi)\,(1)\,(2.1 \times 10^{-7})} = 4.31 \times 10^6$$

(SI)

$$= \frac{(4)\,(0.8649)\,(100)}{(\pi)\,(2.54)\,(1.005 \times 10^{-5})} = 4.31 \times 10^6$$

(US)

$$q_m = 1.9188\,[0.9935 - 1.525\,(4.31 \times 10^6)^{-1/2}]$$

$$= 1.9049 \text{ lbm/sec}$$

(SI)

$$q_m = (0.8706) = [0.9935 - 1.525\,(4.31 \times 10^6)^{-1/2}]$$

$$= 0.8643 \text{ kg/s}$$

Another iteration would do little to change the answer.

C2 THE EFFECT OF PERFECT GAS CONSUMPTION

It is interesting to find the difference in the calculated flow if it were assumed that the flow was that of a perfect gas. The perfect gas critical flow function is

$$C_{*i} = \sqrt{\gamma\left(\frac{2}{\gamma + 1}\right)^{(\gamma + 1)/(\gamma - 1)}}$$

where $\gamma = 1.321$

$$C_{*i} = 0.6710$$

Copyright ASME International
Provided by IHS under license with ASME
No reproduction or networking permitted without license from IHS
Not for Resale

Using C_{*_i} in place of C_R in the flow rate equation

(*US*)

$$q_m = 1.8925 \text{ lbm/sec}$$

(*SI*)

$$q_m = 0.8587 \text{ kg/s}$$

The percentage difference is

(*US*)

$$\frac{1.9049 - 1.8925}{1.9049} \times 100 = 0.65\%$$

(*SI*)

$$\left(\frac{0.8643 - 0.8587}{0.8643}\right) \times 100 = 0.65\%$$

C3 EFFECT OF TEMPERATURE AND PRESSURE CORRECTIONS ON THE MEASURED PRESSURE AND TEMPERATURE

The equation in para. 7.4 can be used to correct the measured pressure and temperature to stagnation conditions.

Equations from para. 7.4

$$P_0 = P_1 \left(1 + \frac{\varkappa - 1}{2} \text{Ma}_1^2\right)^{\varkappa/(\varkappa - 1)}$$

$$T_0 = T_1 \left(1 + \frac{\varkappa - 1}{2} \text{Ma}_1^2\right), \text{ with } \alpha = 1$$

The flow in the conduit is

$$q_m = \varrho A V$$

Solving for the velocity

$$V = \frac{q_m}{\varrho A_1}$$

Copyright ASME International
Provided by IHS under license with ASME
No reproduction or networking permitted without license from IHS
Not for Resale

For the calculation of the plenum Mach number, assume that the gas is a perfect gas. The density at the plenum

(US)

$$\varrho = \frac{P_1}{(R/M)\,T_1} = \frac{(145)\,(144)\,(16.043)}{(1.98586)\,(536.67)\,(778.2)}$$

$$= 0.40398 \text{ lbm/ft}^3$$

(SI)

$$\varrho = \frac{P_1}{(R/M)\,T_1} = \frac{(1 \times 10^6)\,(16.043)}{(8314.41)\,(273.15 + 25)}$$

$$= 6.472 \text{ kg/m}^3$$

The minimum area of the plenum

$$A_1 = \frac{\pi D^2}{4}, \text{ where } D \text{ must be at least } 4 \times d$$

(US)

$$= \frac{\pi\,(16)\,(1)}{(4)\,(144)} = 0.08727 \text{ ft}^2$$

(SI)

$$= \frac{\pi\,(2.54)^2\,(16)}{(4)\,(100)^2} = 0.008107 \text{ m}^2$$

The maximum velocity in the plenum

(US)

$$V_1 = \frac{(1.9049)}{(0.4039)\,(0.08727)} = 54.04 \text{ ft/sec}$$

(SI)

$$V_1 = \frac{(0.8643)}{(6.472)\,(0.008107)} = 16.47 \text{ m/s}$$

Copyright ASME International
Provided by IHS under license with ASME
No reproduction or networking permitted without license from IHS
Not for Resale

The speed of sound at plenum conditions

(US)

$$V_1^* = \sqrt{\varkappa \frac{R}{M} g_c T_1} = \sqrt{(1.321)\,(96.33)\,(32.174)\,(536.67)}$$

$$= 1482.3 \text{ ft/sec}$$

(SI)

$$V_1^* = \sqrt{(1.321)\,(273.15 + 25)\,(8314.41)\,(16.043)}$$

$$= 451.79 \text{ m/s}$$

The Mach number at the plenum

(US)

$$\text{Ma}_1 = 54.04/1482.3 = 0.03646$$

(SI)

$$\text{Ma}_1 = 16.47/451.79 = 0.03646$$

The corrected pressure

$$P_0 = P_1 \left[1 + \frac{0.321}{2} (0.03646)^2\right]^{\frac{1.321}{0.321}}$$

$$= P_1 (1.000878)$$

(US)

$$P_0 = (145)\,(1.000878) = 145.127 \text{ lbf/in.}^2$$

(SI)

$$P_0 = (1 \times 10^6)\,(1.000878) = 1.000878 \times 10^6 \text{ MPa}$$

Copyright ASME International
Provided by IHS under license with ASME
No reproduction or networking permitted without license from IHS
Not for Resale

The corrected temperature

$$T_0 = T_1\left[1 + \frac{0.321}{2}(0.03646)^2\right] ; \text{with } \alpha = 1$$

(*US*)

$$T_0 = T_1\,(1.0002134) = 536.784\ ^\circ\text{R}$$

(*SI*)

$$T_0 = T_1\,(1.0002134) = 298.22\ \text{K}$$

Substituting these values into the equation for the mass flow

(*US*)

$$q_m = \frac{\pi\,(0.6745)\,[0.9935 - 1.525\,(4.31 \times 10^6)^{-1/2}]\,(145.127)\sqrt{32.174}}{4\sqrt{(96.33)\,(536.784)}}$$

$$= 1.9064\ \text{lbm/sec}$$

(*SI*)

$$q_m = \frac{\pi\,(0.6754)\,[0.9935 - 1.525\,(4.31 \times 10^6)^{-1/2}]\,(1.000878 \times 10^6)\,(2.54)^2}{4\sqrt{(298.22)\,(8314.41)/(16.043)}\quad(100)^2}$$

$$= 0.8650\ \text{kg/s}$$

which gives a percentage difference of

(*US*)

$$\%\text{Error} = \frac{1.9064 - 1.9046}{1.9064} \times 100 = 0.1\%$$

(*SI*)

$$\%\text{Error} = \frac{0.8650 - 0.8641}{0.8650} \times 100 = 0.1\%$$

Copyright ASME International
Provided by IHS under license with ASME
No reproduction or networking permitted without license from IHS
Not for Resale

APPENDIX D
CRITICAL FLOW FUNCTIONS

(This Appendix contains supplementary information for the convenience of the reader. It is not a part of ASME/ANSI MFC-7M–1987.)

D1 GENERAL FLOW EQUATIONS

Critical flow functions are derived by reducing the mass flow equation for a nozzle.

The mass flow through a conduit is

$$q_m = A\varrho V \tag{D1}$$

where

V = average velocity
ϱ = average density
A = cross-sectional area

For a critical flow venturi nozzle the average velocity is the speed of sound of the fluid at local conditions. Thus the mass flow may be written as shown in Eq. (D2).

$$q_m = A^*\varrho^* V^* \tag{D2}$$

D2 PERFECT GAS CRITICAL FLOW FUNCTION

The sonic velocity of a fluid is defined for a perfect gas by Eq. (D3).

$$V^* = \sqrt{\varkappa(R/M)\,T^*} \tag{D3}$$

This velocity is the speed at which a pressure wave will move through the fluid. In the general case, the speed of sound is a function of the frequency of the pressure wave. At very high frequencies this speed is reduced because of the ability of the molecules to transfer energy. However, at low frequencies the speed is the same as the compression rate of the fluid.

In order to calculate the flow for a critical flow venturi nozzle, Eqs. (D2) and (D3) are combined to yield Eq. (D4).

$$q_m = A^*\varrho^* \quad \varkappa\,(R/M)\,T^* \tag{D4}$$

In practice it is difficult to measure the state of the fluid at the throat of the nozzle. To avoid doing this the critical flow function is used. This function is obtained by assuming that the flow is isentropic, one-dimensional, and that the fluid is a perfect gas. None of these assumptions are true for a real fluid.

Isentropic, one-dimensional flow requires the entropy to be equal at the nozzle throat and plenum. These assumptions also allow one to set the change in enthalpy equal to one-half of the average fluid velocity squared. These conditions are expressed mathematically below.

$$s_0 - s^* = 0$$

$$\frac{V^{*2}}{2} = (h_0 - h^*)$$

In addition, for a perfect gas the compressibility factor is 1, and the specific heats and isentropic exponent are all constants. Thus for a perfect gas one can write the following equations:

$$\frac{P^*}{P_0} = \left(\frac{2}{\varkappa+1}\right)^{\varkappa/(\varkappa-1)} \rightarrow P^* = P_0\left(\frac{2}{\varkappa+1}\right)^{\varkappa/(\varkappa-1)}$$

$$\frac{\varrho^*}{\varrho_0} = \left(\frac{2}{\varkappa+1}\right)^{1/(\varkappa-1)} \rightarrow \varrho^* = \varrho_0\left(\frac{2}{\varkappa+1}\right)^{1/(\varkappa-1)}$$

$$\frac{T^*}{T_0} = \frac{2}{\varkappa+1} \rightarrow T^* = T_0\left(\frac{2}{\varkappa+1}\right)$$

Copyright ASME International
Provided by IHS under license with ASME
No reproduction or networking permitted without license from IHS
Not for Resale

Substituting these expressions into Eq. (D4) yields Eq. (D5).

$$q_m = A^* \varrho_0 \left[\varkappa \left(\frac{2}{\varkappa+1}\right)^{(\varkappa+1)/(\varkappa-1)}\right]^{1/2} \sqrt{(R/M)\, T_0} \tag{D5}$$

or

$$q_m = A^* C_{*i} \sqrt{P_0 \varrho_0}$$

with

$$C_{*i} = \left[\varkappa \left(\frac{2}{\varkappa+1}\right)^{(\varkappa+1)/(\varkappa-1)}\right]^{1/2}$$

Equation (D5) is usable on a perfect gas with isentropic, one-dimensional flow.

D3 REAL GAS CRITICAL FLOW FUNCTION

It is often desired to write the flow equations in a form that allows for real gas effects. In a real gas the ratio of the specific heats is not constant and the isentropic exponent $\varkappa$ is defined by Eq. (D6).

$$\varkappa = \frac{\varrho}{P}\left(\frac{\partial P}{\partial \varrho}\right)_s \tag{D6}$$

It is still assumed that the sonic velocity may be described by an adiabatic compression of the fluid which is assumed to be isentropic. Thus the acoustic velocity is defined by Eq. (D7).

$$V^* = \left(\frac{\partial P}{\partial \varrho}\right)_s^{1/2} \tag{D7}$$

Combining Eqs. (D6) and (D7) leads to Eq. (D8), the definition of the sonic velocity in terms of ($\varkappa$, P, ϱ).

$$V^* = \sqrt{\varkappa P/\varrho} \tag{D8}$$

By utilizing the equation of state

$$P = Z(\varrho, T)\, \varrho\, (R/M)\, T$$

the sonic velocity may be written as

$$V^* = \sqrt{\varkappa Z\, (R/M)\, T}$$

where $Z = f(\varrho, T)$

This definition of the sonic velocity may now be substituted into Eq. (D5) with the following results:

$$q_m = A^* \varrho_0 \left[\varkappa \left(\frac{2}{\varkappa+1}\right)^{(\varkappa+1)/(\varkappa-1)}\right]^{1/2} \sqrt{Z\,(R/M)\, T_0} \tag{D9}$$

and by replacing ϱ_0 with $\dfrac{P_0}{Z(R/M)\, T_0}$

$$q_m = A^* \left[\varkappa \left(\frac{2}{\varkappa+1}\right)^{(\varkappa+1)/(\varkappa-1)}\right]^{1/2} \frac{1}{\sqrt{Z}} \frac{P_0}{\sqrt{(R/M)\, T_0}}$$

This leads to the definition of the isentropic real gas critical flow function shown below.

$$C_{Ri} = \left[\frac{\varkappa}{Z}\left(\frac{2}{\varkappa+1}\right)^{(\varkappa+1)/(\varkappa-1)}\right]^{1/2} = \frac{C_{*i}}{\sqrt{Z}}$$

It should be noted that isentropic expansion relations used to translate the equations from the nozzle throat conditions to the upstream plenum assume that the gas is a perfect gas. However, both the equation of state and the expression for the sonic velocity have assumed that the gas is a real gas. Despite this inconsistency, Eq. (D9) may be used in some cases with acceptable error.

D4 REAL GAS CRITICAL FLOW COEFFICIENT

To extend the range of application and to improve the accuracy of the computed flow the critical flow function presented thus far can be replaced with a factor called the critical flow coefficient. This coefficient may be thought of as a factor in the flow rate equation which accounts for the real gas effects of fluid. The coefficient still assumes that the flow is isentropic and one-dimensional.

The isentropic critical flow coefficient is defined by Eq. (D10).

$$C_R = \frac{q_m \sqrt{(R/M)\, T_0}}{A^* P_0} \tag{D10}$$

The value of this factor is obtained by integrating thermodynamic functions for the entropy and enthalpy of the fluid from the plenum to the nozzle throat conditions along constant temperature and constant density paths. These integrations are performed until the entropy at both points is equal and the change in enthalpy is equal to one-half the sonic velocity at the throat squared. A further description of this procedure, along with suggested references, is presented in Appendix E. The nonisentropic multidimensional effects of the flow field are accounted for by the discharge coefficient.

Copyright ASME International
Provided by IHS under license with ASME
No reproduction or networking permitted without license from IHS
Not for Resale

APPENDIX E
THE CRITICAL FLOW COEFFICIENT

(This Appendix contains supplementary information for the convenience of the reader. It is not a part of ASME/ANSI MFC-7M–1987.)

E1 CALCULATION OF THE CRITICAL FLOW COEFFICIENT

E1.1 Governing Equations

The critical flow coefficient C_R is defined as the normalized sonic mass flux for inviscid, one-dimensional, steady, isentropic flow.

$$C_R = (\varrho^* V^*/P_0)\,[(R/M)\,T_0]^{1/2} \qquad \text{(E1)}$$

where

ϱ^* = sonic flow density
V^* = sonic flow velocity (at throat)
P_0 = stagnation absolute pressure
T_0 = stagnation absolute temperature
R = universal gas constant
M = molecular mass

Critical or choked flow occurs when the flow velocity V at the throat of a nozzle or venturi reaches the local soundspeed ($V = V^*$). Euler's equation of motion under these conditions relates the drop in enthalpy h to the local soundspeed.

Euler's equation

$$h_0 - h^* = \frac{(V^*)^2}{2} \qquad \text{(E2)}$$

The flow Mach number Ma is given as the ratio of the flow velocity to the local soundspeed. Hence,

$$\text{Ma} = V/V^* = 1 \text{ for sonic or critical flow} \qquad \text{(E3)}$$

Since the flow process has been defined to be isentropic:

Isentropic condition

$$s_0 = s^* \qquad \text{(E4)}$$

Equations (E2, 3) and (E4) must be satisfied to determine the sonic flow state.

For the general case of a real gas, the (thermal) equation of state is typically given by an equation explicit in pressure.

Equation of state

$$P = P(\varrho, T) \quad \text{or} \quad Z = Z(\varrho, T) \qquad \text{(E5)}$$

The equation of state, combined with the ideal-gas heat capacity function $c_p^0\,(T)$, provides a complete thermodynamic description of the gas.

E1.2 Calculation Procedure

The calculation procedure to find the sonic flow state is outlined below.

(*a*) Calculate the stagnation properties P_0, ϱ_0, T_0, h_0, s_0, and $\varkappa_0$.

(*b*) Estimate the sonic flow state (ϱ^*, T^*) using suitable approximations. For example, the polytropic model yields

$$T^* = T_0[2/(\varkappa_0 + 1)]$$

$$\varrho^* = \varrho_0(T^*/T_0)^{1/(\varkappa_0 - 1)}$$

(*c*) Calculate s^* and correct either T^* or ϱ^* (or both) to satisfy the isentropic condition (E4).

(*d*) Determine the error in satisfying Euler's equation (E2) or the flow Mach number (E3). Use this error to correct T^* or ϱ^* (or both).

Error,

$$e = h_0 - h^* - \frac{(V^*)^2}{2}$$

Copyright ASME International
Provided by IHS under license with ASME
No reproduction or networking permitted without license from IHS
Not for Resale

or

$$e = \text{Ma} - 1 = [2(h_0 - h^*)]^{1/2}/V^*$$

Steps 3 and 4 must be repeated until conditions (E2), (E3), and (E4) are satisfied to within desired tolerances.

(*e*) Once the sonic state has been determined, then Eq. (E1) is used to calculate the critical flow coefficient C_R.

Additional information on the calculation procedure is given in references [32, 33, 34].

Additional information on methods of estimating critical flow properties based on approximate isentropic models is given in reference [35].

E2 EQUATIONS OF STATE FOR THE THERMODYNAMIC PROPERTIES OF SOME INDUSTRIALLY IMPORTANT PURE GASES

Numbers in brackets indicate references listed at the end of this Appendix which provide state equations for the gas shown.

Ammonia [1]
Argon [2–5]
Butane [8]
Carbon dioxide [2–5]
Carbon monoxide [3]
Ethane [8, 11, 27]
Ethylene [2, 7]
Helium [3]
Heptane [10, 11]
Hexane [10, 11]
Hydrogen (para) [2, 3, 21]
Isobutane [10, 11]
Isopentane [10, 11]
Methane [3, 5, 22, 26, 29]
Neon [3, 23]
Nitrogen [2–6, 9]
Octane [10, 11]
Oxygen [2–6, 9]
Pentane [10, 11]
Propane [8, 10, 11, 28]
Propylene [7, 10, 11]
Refrigerant 11 [14, 15]
Refrigerant 12 [14, 25]
Refrigerant 13 [25]
Refrigerant 14 [14, 25]
Refrigerant 22 [14, 16]
Refrigerant 23 [14, 25]
Refrigerant 114 [14, 19, 25]
Refrigerant 115 [25]
Refrigerant C-318 [14, 20, 25]
Refrigerant 500 [14]
Refrigerant 502 [14, 17]
Refrigerant 503 [14, 18]
Refrigerant 846 [25]
Water [12, 13]
Additional gases [24]

E3 EQUATIONS OF STATE FOR THE THERMODYNAMIC PROPERTIES OF SOME INDUSTRIALLY IMPORTANT GAS MIXTURES

Natural Gas Mixtures — corresponding state equation [10, 11, 29, 31]
Air [4, 9, 33, 36]

E4 SAMPLE VALUES OF THE CRITICAL FLOW COEFFICIENTS FOR SOME SELECTED FLUIDS

The tables provided in this section are intended to provide the reader with some general information on the magnitude and variation of the critical flow coefficient. These are not recommended values and no guarantee is provided concerning their accuracy.

E5 REFERENCES

[1a] Haar, L., and J. S. Gallagher, "Thermodynamic Properties of Ammonia," *Journal of Physics and Chemical Reference Data,* 7 (30) (1978): 635.

[1b] Haar, L., "Thermodynamic Properties of Ammonia as an Ideal Gas," *Iowa State Journal of Research, 72A, 207,* 207, 1968.

[2] Younglove, B. A., "Thermophysical Properties of Fluids. I. Argon, Ethylene, Parahydrogen, Nitrogen Trifluoride and Oxygen," *Journal of Physics and Chemical Reference Data,* 11, Suppl. 1, 1982.

[3] Hendricks, R. C., A. K. Baron, and I. C. Peller, "GASP — A Computer Code for Calculating the Thermodynamic and Transport Properties for Ten Fluids: Parahydrogen, Helium, Neon, Methane, Nitrogen, Carbon Monoxide, Oxygen, Fluorine, Argon and Carbon Dioxide," NASA TN D-7808, 1975.

[4] Bender, E., *The Calculation of Phase Equilibria from a Thermal Equation of State Applied to the Pure Fluids Argon, Nitrogen, Oxygen and Their Mixtures,* Verlag C. F. Mueller, Karlsruhe, 1973.

[5] Bender, E., "Equations of State Exactly Representing the Phase Behavior of Pure Substances," *Proceedings of the 5th Symposium on Thermophysical Properties,* ASME, New York, 1970: 277.

[6] Bender, E., "An Equation of State for Predicting Vapour-Liquid Equilibria of the System N_2-Ar-O_2," *Cryogenics* 13 (1) (1973): 11–18.

[7] Bender, E., "Equations of State for Ethylene and Propylene," *Cryogenics* 15 (1975): 667–673.

[8] Teja, A. S., and A. Singh, "Equations of State for Ethane, Propane and n-Butane," *Cryogenics* 17 (11) (1977): 591–596.

[9] Jacobsen, R. T., R. B. Stewart, and A. F. Myers, "An Equation of State for Oxygen and Nitrogen," *Advances in Cryogenic Engineering* 18 (1978): 248.

[10] Starling, K. E., *Fluid Thermodynamic Properties for Light Petroleum Substances,* Gulf Publ., Houston, 1973.

[11] Starling, K. E., K. H. Kumar, R. T. Ellington, et al., "Development of Improved Capabilities for Computation of Gas Supercompressibility Factors and Other Properties," GRI Report 84/0224, NTIS# TB85-188316, Gas Research Institute, Chicago, 1984.

Copyright ASME International
Provided by IHS under license with ASME
No reproduction or networking permitted without license from IHS
Not for Resale

[12] *NBS/NRC Steam Tables,* 1984.

[13] Keenan, J. H., F. G. Keyes, P. C. Hill, and J. G. Moore, *Steam Tables,* John Wiley and Sons, New York, 1978.

[14] Downing, R. C., "Refrigerant Equations," ASHRAE Paper 2313, *Transactions of ASHRAE,* 80II (1974): 158.

[15] E. I. DuPont de Nemours & Co., Bulletin T-11, November 1972.

[16] E. I. DuPont de Nemours & Co., Bulletin T-22, November 1972.

[17] E. I. DuPont de Nemours & Co., Bulletin T-502, August 1969.

[18] E. I. DuPont de Nemours & Co., Bulletin T-503, June 1968.

[19] Martin, J. J., "Thermodynamic Properties of Dichlorotetrafluoromethane," *Journal of Chemical Engineering Data* 5 (3) (1960): 334.

[20] Martin, J. J., "Thermodynamic Properties of Perfluorocyclobutane," *Journal of Chemical Engineering Data* 7 (1) (1962): 68.

[21] Roder, H. M., and R. D. McCarty, "A Modified Benedict-Webb-Rubin Equation of State for Parahydrogen-2," NBSIR 75-814, 1975.

[22] McCarty, R. D., "A Modified Benedict-Webb-Rubin Equation of State for Methane Using Recent Experimental Data," *Cryogenics* 14 (1974): 276.

[23] McCarty, R. D., and R. B. Stewart, "Thermodynamic Properties of Neon From 25 to 300 K Between 0.1 and 200 Atmospheres," *3rd Symposium on Thermophysical Properties,* ASME, New York, (1965): 84.

[24] Reynolds, W. C., *Thermodynamic Properties in SI,* Stanford University, 1979.

[25] Morsy, T. E., "Extended Benedict-Webb-Rubin Equation of State: Application to Eight Fluorine Compounds," *Journal of Chemical Engineering Data* 15 (2) (1970): 256-265.

[26] Goodwin, R. D., "The Thermophysical Properties of Methane from 90 to 500 K at Pressures to 700 Bar," NBS TN 653, 1974.

[27] Goodwin, R. D., H. M. Roder, and G. C. Straty, "Thermophysical Properties of Ethane, From 90 to 600 K at Pressures to 700 Bar," NBS TN 684, 1976.

[28] Goodwin, R. D., "Provisional Thermodynamic Functions of Propane, From 85 to 700 K at Pressures to 700 Bar," NBSIR 77-860, 1977.

[29] Vennix, A. J., and R. Kobayashi, "An Equation of State for Methane in the Gas and Liquid Phases," *AICHE Journal,* 15 (6) (1969): 926-431.

[30] Reid, R. C., J. Prausnitz, and T. Sherwood, *The Properties of Gases and Liquids,* 3rd Edition, McGraw-Hill, New York, 1977.

[31] Benedict, M., G. B. Webb, and L. C. Rubin, "An Empirical Equation for Thermodynamic Properties of Light Hydrocarbons and Their Mixtures. I. Methane, Ethan, Propane and n-Butane, *Journal of Chemical Physics* 8 (4) (1940): 334-345.

[32] Johnson, R. C., "Calculations of Real-Gas Effects in Flow Through Critical-Flow Nozzles," *Journal of Basic Engineering* 86 (3) (1964): 519-526.

[33] Johnson, R. C., "Real-Gas Effects in Critical Flow Through Nozzles and Tabulated Thermodynamic Properties," NASA TN D-2565, 1965.

[34] Johnson, R. C., "Tables of Critical Flow Functions and Thermodynamic Properties for Methane and Computation Procedures for both Methane and Natural Gas," NASA SP 3074, 1972.

[35] Sullivan, D. A., "Historical Review of Real-Fluid Isentropic Flow Models," *Journal of Fluids Engineering* 103 (2) (1981): 258-267.

[36] Hilsenrath J., et al., *Tables of Thermodynamic and Transport Properties of Air, Argon, Carbon Dioxide, Carbon Monoxide, Hydrogen, Oxygen, and Steam,* Pergamon Press, New York, 1960.

Copyright ASME International
Provided by IHS under license with ASME
No reproduction or networking permitted without license from IHS
Not for Resale

TABLE E1 TABLE OF FLUIDS FOR VARIOUS EQUATIONS OF STATE

Fluid	Reference Numbers				
	[30, 31]	[10]	[11]	[2][1]	[3][2]
Alkanes					
Methane	x	x	x	x	x
Ethane	x	x	x	—	x
Propane	x	x	x	—	x
n-Butane	x	x	x	—	x
i-Butane	x	x	x	—	x
n-Pentane	x	x	x	—	—
i-Pentane	x	x	x	—	—
neo-Pentane	x	x	x	—	—
n-Hexane	x	x	x	—	—
n-Heptane	x	x	x	—	—
n-Octane	x	x	x	—	—
Pentanes (ave)	—	—	x	—	—
Hexane + (ave)	—	—	x	—	—
Other Hydrocarbons					
Ethylene	x	x	—	x	x
Propylene	x	x	—	—	x
Isobutylene	x	—	—	—	—
Nonhydrocarbons					
Argon	x	—	—	x	x
Nitrogen	x	x	x	x	x
Oxygen	x	—	—	x	x
Carbon monoxide	x	—	—	—	x
Carbon dioxide	x	x	x	—	x
Water	—	—	x	—	—
Helium	x	—	x	—	x
Parahydrogen	x	x	—	x	x
Hydrogen sulfide	—	x	x	—	—
Neon	—	—	—	—	x
Fluorine	—	—	—	—	x
Mixtures	Yes	Yes	Yes	No	Some
Year published	1940	1973	1984	1980	1971/5
No. of constants	8	11	43	33	20/24

NOTES:

(1) Series of NBS publications based on a modified BWR equation of state. Most, but not all, are contained in revised publications based on "Fluids Pack" software developed by McCarty. Most recent version given in reference [2].

(2) Bender equation of state has been the basis for the correlation of pure fluid data (by Bender and others). This equation of state is the starting point for the GASP software package.

Copyright ASME International
Provided by IHS under license with ASME
No reproduction or networking permitted without license from IHS
Not for Resale

Copyright ASME International
Provided by IHS under license with ASME
No reproduction or networking permitted without license from IHS

TABLE E2 CRITICAL FLOW COEFFICIENTS FOR NITROGEN

	Stagnation Conditions Pressure, MPa											
Temp., °C	0.0	0.5	1.0	2.0	3.0	4.0	5.0	6.0	7.0	8.0	9.0	10.0
−50	0.6840	0.6878	0.6908	0.6970	0.7035	0.7102	0.7171	0.7243	0.7315	0.7389	0.7462	0.7536
−25	0.6848	0.6869	0.6891	0.6934	0.6978	0.7023	0.7069	0.7115	0.7161	0.7208	0.7254	0.7299
0	0.6848	0.6863	0.6879	0.6910	0.6941	0.6972	0.7004	0.7035	0.7067	0.7097	0.7128	0.7158
25	0.6848	0.6859	0.6870	0.6893	0.6915	0.6938	0.6960	0.6982	0.7004	0.7025	0.7046	0.7066
50	0.6847	0.6855	0.6864	0.6880	0.6896	0.6913	0.6928	0.6944	0.6959	0.6974	0.6989	0.7003
75	0.6846	0.6853	0.6859	0.6871	0.6882	0.6894	0.6905	0.6916	0.6927	0.6938	0.6948	0.6958
100	0.6845	0.6850	0.6854	0.6863	0.6871	0.6880	0.6888	0.6895	0.6903	0.6910	0.6917	0.6924

TABLE E3 CRITICAL FLOW COEFFICIENT FOR OXYGEN

	Stagnation Conditions Pressure, MPa											
Temp., °C	0.0	0.5	1.0	2.0	3.0	4.0	5.0	6.0	7.0	8.0	9.0	10.0
−50	0.6846	0.6886	0.6927	0.7013	0.7104	0.7201	0.7304	0.7413	0.7528	0.7650	0.7779	0.7914
−25	0.6845	0.6875	0.6905	0.6966	0.7030	0.7096	0.7164	0.7234	0.7307	0.7381	0.7457	0.7535
0	0.6844	0.6866	0.6889	0.6934	0.6981	0.7028	0.7076	0.7125	0.7175	0.7225	0.7276	0.7326
25	0.6842	0.6859	0.6876	0.6911	0.6946	0.6981	0.7016	0.7052	0.7087	0.7123	0.7159	0.7194
50	0.6839	0.6852	0.6865	0.6892	0.6919	0.6945	0.6972	0.6999	0.7025	0.7051	0.7078	0.7103
75	0.6835	0.6845	0.6855	0.6876	0.6897	0.6917	0.6938	0.6958	0.6978	0.6998	0.7017	0.7037
100	0.6829	0.6837	0.6845	0.6861	0.6877	0.6893	0.6909	0.6925	0.6940	0.6955	0.6970	0.6984

TABLE E4 CRITICAL FLOW COEFFICIENT FOR ARGON

	Stagnation Conditions Pressure, MPa											
Temp., °C	0.0	0.5	1.0	2.0	3.0	4.0	5.0	6.0	7.0	8.0	9.0	10.0
−50	0.7262	0.7310	0.7358	0.7460	0.7567	0.7679	0.7797	0.7922	0.8053	0.8191	0.8335	0.8484
−25	0.7262	0.7297	0.7333	0.7407	0.7482	0.7560	0.7639	0.7720	0.7803	0.7888	0.7975	0.8062
0	0.7262	0.7289	0.7316	0.7372	0.7427	0.7484	0.7540	0.7598	0.7655	0.7713	0.7772	0.7830
25	0.7262	0.7283	0.7304	0.7347	0.7389	0.7432	0.7474	0.7517	0.7559	0.7601	0.7643	0.7684
50	0.7262	0.7279	0.7295	0.7329	0.7362	0.7395	0.7427	0.7460	0.7492	0.7523	0.7555	0.7585
75	0.7262	0.7275	0.7289	0.7315	0.7342	0.7367	0.7393	0.7418	0.7443	0.7467	0.7491	0.7515
100	0.7262	0.7273	0.7284	0.7305	0.7326	0.7347	0.7367	0.7387	0.7406	0.7426	0.7444	0.7463

Not for Resale

Copyright ASME International
Provided by IHS under license with ASME
No reproduction or networking permitted without license from IHS

TABLE E5 CRITICAL FLOW COEFFICIENTS FOR METHANE

	Stagnation Conditions Pressure, MPa											
Temp., °C	0.0	0.5	1.0	2.0	3.0	4.0	5.0	6.0	7.0	8.0	9.0	10.0
−50	0.6726	0.6798	0.6875	0.7048	0.7254	0.7506	0.7827	0.8249	0.8824	0.9576	1.0418	1.1179
−25	0.6719	0.6771	0.6825	0.6943	0.7075	0.7223	0.7390	0.7581	0.7799	0.8047	0.8324	0.8623
0	0.6708	0.6747	0.6787	0.6872	0.6963	0.7061	0.7167	0.7281	0.7404	0.7536	0.7676	0.7823
25	0.6694	0.6724	0.6754	0.6817	0.6884	0.6953	0.7026	0.7102	0.7182	0.7266	0.7352	0.7441
50	0.6678	0.6701	0.6724	0.6772	0.6822	0.6873	0.6925	0.6980	0.7036	0.7093	0.7151	0.7211
75	0.6659	0.6677	0.6695	0.6732	0.6770	0.6808	0.6848	0.6888	0.6929	0.6970	0.7012	0.7054
100	0.6639	0.6653	0.6667	0.6696	0.6725	0.6755	0.6784	0.6815	0.6845	0.6876	0.6907	0.6938

TABLE E6 CRITICAL FLOW COEFFICIENTS FOR CARBON DIOXIDE

	Stagnation Conditions Pressure, MPa											
Temp., °C	0.0	0.5	1.0	2.0	3.0	4.0	5.0	6.0	7.0	8.0	9.0	10.0
−50	0.6739	...	...	...	...	...	...	...	...	...	...	...
−25	0.6713	0.6864	...	...	...	...	...	...	...	...	...	...
0	0.6689	0.6797	0.6918	...	...	...	...	...	...	...	...	...
25	0.6668	0.6748	0.6834	0.7032	0.7277	...	...	...	...	...	...	...
50	0.6649	0.6709	0.6774	0.6915	0.7077	0.7267	0.7497	0.7783	0.8162	...	...	...
75	0.6632	0.6679	0.6728	0.6833	0.6949	0.7078	0.7222	0.7386	0.7575	0.7795	0.8056	0.8360
100	0.6616	0.6653	0.6692	0.6772	0.6859	0.6952	0.7053	0.7163	0.7282	0.7412	0.7555	0.7713

Not for Resale

STANDARDS FOR MEASUREMENT OF FLUID IN CLOSED CONDUITS

(Published by the American Society of Mechanical Engineers)

TITLE OF STANDARD

Glossary of Terms Used in the Measurement of Fluid Flow in Pipes MFC-1M–1979 (R1986)
Measurement Uncertainty for Fluid Flow in Closed Conduits MFC-2M–1983
Measurement of Fluid Flow in Pipes Using Orifice, Nozzle, and Venturi MFC-3M–1985
Measurement of Gas by Turbine Meters MFC-4M–1986
Measurement of Liquid Flow in Closed Conduits Using Transit-Time Ultrasonic Flowmeters MFC-5M–1985
Measurement of Fluid Flow in Pipes Using Vortex Flow Meters MFC-6M–1987
Measurement of Gas Flow by Means of Critical Flow Venturi Nozzles MFC-7M–1987

The ASME Publications Catalog shows a complete list of all the Standards published by the Society.

The catalog and binders for holding these Standards are available upon request.

K00119

Copyright ASME International
Provided by IHS under license with ASME
No reproduction or networking permitted without license from IHS
Not for Resale