F-57-09

AN AMERICAN NATIONAL STANDARD

Measurement of Liquid Flow in Closed Conduits Using Transit-Time Ultrasonic Flowmeters

ANSI/ASME MFC-5M–1985

SPONSORED AND PUBLISHED BY

THE AMERICAN SOCIETY OF MECHANICAL ENGINEERS

United Engineering Center 345 East 47th Street New York, N. Y. 10017

Copyright ASME International
Provided by IHS under license with ASME
No reproduction or networking permitted without license from IHS

Not for Resale

Date of Issuance: July 15, 1985

This Standard will be revised when the Society approves the issuance of a new edition. There will be no addenda or written interpretations of the requirements of this Standard issued to this Edition.

This code or standard was developed under procedures accredited as meeting the criteria for American National Standards. The Consensus Committee that approved the code or standard was balanced to assure that individuals from competent and concerned interests have had an opportunity to participate. The proposed code or standard was made available for public review and comment which provides an opportunity for additional public input from industry, academia, regulatory agencies, and the public-at-large.

ASME does not "approve," "rate," or "endorse" any item, construction, proprietary device, or activity.

ASME does not take any position with respect to the validity of any patent rights asserted in connection with any items mentioned in this document, and does not undertake to insure anyone utilizing a standard against liability for infringement of any applicable Letters Patent, nor assume any such liability. Users of a code or standard are expressly advised that determination of the validity of any such patent rights, and the risk of infringement of such rights, is entirely their own responsibility.

Participation by federal agency representative(s) or person(s) affiliated with industry is not to be interpreted as government or industry endorsement of this code or standard.

ASME accepts responsibility for only those interpretations issued in accordance with governing ASME procedures and policies which preclude the issuance of interpretations by individual volunteers.

No part of this document may be reproduced in any form,
in an electronic retrieval system or otherwise,
without the prior written permission of the publisher.

Copyright © 1985 by
THE AMERICAN SOCIETY OF MECHANICAL ENGINEERS
All Rights Reserved
Printed in U.S.A.

Copyright ASME International
Provided by IHS under license with ASME
No reproduction or networking permitted without license from IHS

Not for Resale

FOREWORD

(This Foreword is not part of ANSI/ASME MFC-5M-1985.)

The need for a document describing measurement of liquid flows by means of transit-time ultrasonic flowmeters has been recognized for many years. This document represents the first formal attempt to establish common ground between the users and manufacturers of these meters. Doppler flowmeters are not covered by this document.

This Standard, which was approved by the ASME Standards Committee on Measurement of Fluid Flow in Closed Conduits, was approved and designated as an American National Standard by the American National Standards Institute on April 12, 1985.

Copyright ASME International
Provided by IHS under license with ASME
No reproduction or networking permitted without license from IHS
Not for Resale

ASME STANDARDS COMMITTEE
Measurement of Fluid Flow in Closed Conduits

(The following is the roster of the Committee at the time of approval of this Standard.)

OFFICERS

R. W. Miller, *Chairman*
W. F. Z. Lee, *Vice Chairman*
K. Wessely, *Secretary*

COMMITTEE PERSONNEL

R. B. Abernethy, Pratt & Whitney Aircraft, West Palm Beach, Florida
J. W. Adam, Houston, Texas
N. A. Alston, Diederich Standard Corp., Boulder, Colorado
H. P. Bean, El Paso, Texas
S. R. Beitler, The Ohio State University, Columbus, Ohio
M. Bradner, The Foxboro Co., Foxboro, Massachusetts
E. E. Buxton, St. Albans, West Virginia
J. S. Castorina, Naval Ship System Engineering Station, Philadelphia, Pennsylvania
G. P. Corpron, Rosemount Inc., Eden Prairie, Minnesota
C. F. Cusick, Philadelphia, Pennsylvania
L. A. Dodge, Richmond Heights, Ohio
R. B. Dowdell, University of Rhode Island, Kingston, Rhode Island
R. L. Galley, Antioch, California
D. Halmi, D. Halmi & Associates Inc., Pawtucket, Rhode Island
R. M. Hickox, S.O.R., Inc., Olathe, Kansas
H. S. Hillbrath, Boeing Aerospace Co., Santa Clara, California
E. H. Jones, Jr., Gulf Research and Development Co., Houston, Texas
L. J. Kemp, Palos Verdes Estates, California
D. R. Keyser, Aero-Mechanical Branch, Warminster, Pennsylvania
C. P. Kittredge, Princeton, New Jersey
W. F. Z. Lee, Rockwell International, Pittsburgh, Pennsylvania
E. D. Mannherz, Fischer & Porter Co., Warminster, Pennsylvania
G. E. Mattingly, National Bureau of Standards, Washington, D.C.
R. W. Miller, The Foxboro Co., Foxboro, Massachusetts
R. V. Moorse, Union Carbide Corp., Tonawanda, New York
L. C. Neale, Jefferson, Massachusetts
M. H. November, Hacienda Heights, California
W. M. Reese, Jr., Fluidic Techniques Inc., Mansfield, Texas
P. G. Scott, *Observer*, The Foxboro Co., Foxboro, Massachusetts
H. E. Snider, AWWA Standards Committee, Kansas City, Missouri
D. A. Sullivan, Fern Engineering, Bourne, Massachusetts
R. G. Teyssandier, Daniel Industries Inc., Houston, Texas
J. S. Yard, Fischer & Porter Co., Warminster, Pennsylvania

Copyright ASME International
Provided by IHS under license with ASME
No reproduction or networking permitted without license from IHS
Not for Resale

SUBCOMMITTEE 9 – ULTRASONIC FLOWMETERS

R. G. Teyssandier, *Chairman*, Daniel Industries, Inc., Houston, Texas
R. W. Burdett, Kennecott Minerals Co., Salt Lake City, Utah
C. G. Clyde, Utah State University, Logan, Utah
G. P. Corpron, Rosemount Inc., Eden Prairie, Minnesota
L. D. DiNapoli, Leeds & Northrup Co., North Wales, Pennsylvania
D. J. Grant, NASA, Greenbelt, Maryland
D. Halmi, D. Halmi & Associates Inc., Pawtucket, Rhode Island
R. E. Johnson, BC Hydro & Power Authorities, Surrey, British Columbia, Canada
L. J. Kemp, Palos Verdes Estates, California
R. B. Kimball, Technical Sales Development Co., San Francisco, California
F. C. Lowell, Ferranti ORE Inc., Falmouth, Massachusetts
L. C. Neale, Jefferson, Massachusetts
P. H. Nelson, Bureau of Reclamation, Denver, Colorado
W. E. VanOver, Transducers Inc., Cerritos, California
J. H. Vignos, The Foxboro Co., Foxboro, Massachusetts
E. M. Zacharias, Jr., MAPCO Controls Co., Tulsa, Oklahoma

Copyright ASME International
Provided by IHS under license with ASME
No reproduction or networking permitted without license from IHS
Not for Resale

CONTENTS

Foreword iii
Committee Roster v

1 General 1
2 Flowmeter Description 1
3 Error Sources and Their Reduction 6
4 Application Guidelines 8
5 Meter Factor Determination and Verification 9

Figures

1 Wetted Transducer Configuration 4
2 Protected Configuration With Cavities 4
3 Protected Configuration With Protrusions 4
4 Protected Configuration With Smooth Bore 4
5 Acoustic Path Configurations 5
6 A Typical Cross Path Ultrasonic Flowmeter Configuration (Paths May Be Multipath Diametric or Chordal) 7

Appendices

A Acoustic Transit Time in a Nonuniform Fluid Velocity Field 11
B Selection Guidelines 14

Copyright ASME International
Provided by IHS under license with ASME
No reproduction or networking permitted without license from IHS
Not for Resale

ANSI/ASME MFC-5M-1985
AN AMERICAN NATIONAL STANDARD

AN AMERICAN NATIONAL STANDARD

MEASUREMENT OF LIQUID FLOW IN CLOSED CONDUITS USING TRANSIT-TIME ULTRASONIC FLOWMETERS

1 GENERAL

1.1 Scope

This Standard applies only to ultrasonic flowmeters that base their operation on the measurement of transit times of acoustic signals. Further, this Standard concerns only the application of such meters when used to measure the volumetric flow rate of a liquid exhibiting homogeneous acoustic properties and flowing in a completely filled closed conduit.

Not covered by this Standard are ultrasonic flowmeters that derive volumetric flow rate from measurements of the deviation, scattering (Doppler flowmeter), or correlation of acoustic signals.

1.2 Purpose

This Standard provides:

(*a*) a description of the operating principles employed by the ultrasonic flowmeters covered in this Standard;

(*b*) a description of error sources and performance verification procedures;

(*c*) a common set of terminology, symbols, definitions, and specifications.

1.3 Terminology, Symbols, and Definitions

Terminology and symbols used in this Standard, except for those defined below, are in accordance with ANSI/ASME MFC-1M, Glossary of Terms Used in the Measurement of Fluid Flow in Pipes.

acoustic path – the path that the acoustic signals follow as they propagate through the measurement section between the transducer elements

axial flow velocity (V_{ax}) – the component of liquid flow velocity at a point in the measurement section that is parallel to the measurement section's axis and in the direction of the flow being measured

cross flow velocity – the component of liquid flow velocity at a point in the measurement section that is perpendicular to the measurement section's axis

measurement section – the section of conduit in which the volumetric flow rate is sensed by the acoustic signals. The measurement section is bounded at both ends by planes perpendicular to the axis of the section and located at the extreme upstream and downstream transducer positions.

nonrefractive system – an ultrasonic flowmeter in which the acoustic path crosses the solid/process liquid interfaces at a right angle

refractive system – an ultrasonic flowmeter in which the acoustic path crosses the solid/process liquid interfaces at other than a right angle

transducer – the combination of the transducer element and passive materials

transducer element – an active component that produces either acoustic output in response to an electric stimulus and/or an electric output in response to an acoustic stimulus

transit time (t) – the time required for an acoustic signal to traverse an acoustic path

velocity profile correction factor (S) – a dimensionless factor based on measured knowledge of the velocity profile used to adjust the meter output

2 FLOWMETER DESCRIPTION

The transit-time ultrasonic flowmeter being considered in this Standard is a complete system composed of the *primary device*, which is a measurement section with one or more pairs of transducers, and the *secondary device*, which is the electronic equipment necessary to operate the transducers, make the measurements, process the measured data, and display or record results.

Copyright ASME International
Provided by IHS under license with ASME
No reproduction or networking permitted without license from IHS
Not for Resale

2.1 Operating Principles

2.1.1 Introduction. At any given instant, the difference between the apparent speed of sound in a moving liquid and the speed of sound in that same liquid at rest is directly proportional to the liquid's instantaneous velocity. As a consequence, a measure of the average velocity of the liquid along a path can be obtained by transmitting an acoustic pulse along the path and subsequently measuring its transit time.

The volumetric flow rate of a liquid flowing in a completely filled closed conduit is defined as the average velocity of the liquid over a cross section multiplied by the area of the cross section. Thus, by measuring the average velocity of a liquid along one or more acoustic paths and combining the measurements with knowledge of the cross-sectional area and the velocity profile over the cross section, it is possible to obtain an estimate of the volumetric flow rate of the liquid in the conduit.

The theoretical considerations involved in implementing these concepts is the subject of this section.

2.1.2 Fluid Velocity Measurement. Several techniques can be used to obtain a measure of the average effective speed of propagation of an acoustic pulse in a moving liquid in order to determine the average axial flow velocity ($\bar{V}_{ax}$) along an acoustic path. Two approaches, transit-time difference and frequency difference, will be discussed here.

2.1.2.1 Transit-Time Difference. The basis of this technique is the direct measurement of the transit time of acoustic signals as they propagate between a transmitter and a receiver, both of which are assumed (see para. 2.1.3) to be in direct contact with the liquid. Different transmitter/receiver arrangements are described in para. 2.1.3 below. For an acoustic signal traveling upstream, the apparent sound speed at any point along the line of transmission, assuming only axial flow, is

$$C_{up} = C_o \sqrt{1 - \left(\frac{V_{ax}}{C_o}\right)^2 \sin^2\theta} - V_{ax}\cos\theta \qquad (1)$$

where C_o is the speed of sound in the liquid at rest, θ is the angle between the acoustic path and V_{ax}, and V_{ax} is the axial flow velocity at the point in question (see Fig. 1). For a downstream pulse,

$$C_{down} = C_o \sqrt{1 - \left(\frac{V_{ax}}{C_o}\right)^2 \sin^2\theta} + V_{ax}\cos\theta \qquad (2)$$

In the ideal case of plug flow, V_{ax} is constant throughout the liquid and the acoustic path is a straight line, i.e., θ = constant = θ_o (path angle for fluid at rest). Consequently, C_{up} and C_{down} are both constants along the acoustic path. In this case the upstream and downstream transit times (t_{up}, t_{down}) are given respectively by:

$$t_{up} = \frac{l_o}{C_o \sqrt{1 - \left(\frac{V_{ax}}{C_o}\right)^2 \sin^2\theta_o} - V_{ax}\cos\theta_o} \qquad (3)$$

and

$$t_{down} = \frac{l_o}{C_o \sqrt{1 - \left(\frac{V_{ax}}{C_o}\right)^2 \sin^2\theta_o} + V_{ax}\cos\theta_o} \qquad (4)$$

where l_o is the straight line distance between the centers of the faces of the acoustic transmitter and receiver. Taking the difference between the reciprocals of these transit times leads to

$$\frac{1}{t_{down}} - \frac{1}{t_{up}} = \frac{2V_{ax}\cos\theta_o}{l_o}$$

and, on rearranging, to

$$V_{ax} = \frac{l_o}{2\cos\theta_o}\left(\frac{1}{t_{down}} - \frac{1}{t_{up}}\right)$$

$$= \frac{l_o}{2\cos\theta_o}\,\frac{\Delta t}{t_{up}\,t_{down}}$$

where $\Delta t = t_{up} - t_{down}$. Since V_{ax} is constant, $V_{ax} = \bar{V}_{ax}$ (the average flow velocity).

This analysis becomes more complicated in the absence of plug flow. Nevertheless, to the degree that $(V_{ax}/C_o)^2_{max.} \ll 1$, the result for the average of the axial liquid velocity along the acoustic path ($\bar{V}_{ax}$) is identical (see Appendix A), i.e.,

$$\bar{V}_{ax} = \frac{l_o}{2\cos\theta_o}\,\frac{\Delta t}{t_{up}\,t_{down}} \qquad (5)$$

2.1.2.2 Frequency Difference. In a frequency difference measurement approach, the reception of an acoustic signal at the receiver is used as a reference for generating a subsequent acoustic signal at the transmitter. Assuming no delays other than the propagation time of the acoustic pulses in the liquid, the frequency at which the pulses are generated or received is proportional to the reciprocal of their transit time. The equations derived in the previous paragraph are equally valid in this case, the

Copyright ASME International
Provided by IHS under license with ASME
No reproduction or networking permitted without license from IHS
Not for Resale

transit time being replaced by the reciprocal of a constant (K_f) times the frequencies, i.e.,

$$\bar{V}_{ax} = \frac{K_f l_o}{2 \cos \theta_o} (f_{\text{down}} - f_{\text{up}}) \tag{6}$$

2.1.3 Transducer Considerations. In the preceding paragraph it was assumed that the transducer element was in direct contact with the liquid and that the acoustic signal was propagated normal to the transducer/liquid interface. In most cases it is desirable to protect the transducer element from the process liquid by using intervening materials (see Figs. 2 and 3). If such an arrangement is employed, Eq. (5) takes the following form:

$$\bar{V}_{ax} = \frac{l_o}{2 \cos \theta_o} \left[\frac{1}{(t_{\text{down}} - t_o)} - \frac{1}{(t_{\text{up}} - t_o)} \right]$$

$$= \frac{l_o}{2 \cos \theta_o} \left[\frac{\Delta t}{(t_{\text{down}} - t_o)(t_{\text{up}} - t_o)} \right] \tag{7}$$

where t_o, a function of temperature, is the transit time of the acoustic signals in the intervening materials.

The equation appropriate to the frequency difference technique must also be modified:

$$\bar{V}_{ax} = \frac{K_f l_o}{2 \cos \theta_o} \left[\frac{(f_{\text{down}} - f_{\text{up}})}{\left(1 - \frac{f_{\text{down}}}{f_o}\right)\left(1 - \frac{f_{\text{up}}}{f_o}\right)} \right] \tag{8}$$

where f_o is equal to $1/t_o$.

Use of an intervening material also allows the possibility of acoustic signals entering and leaving the liquid along a path that is not normal to the solid/liquid interface. For example, the intervening material could be flush with the inside surface of the conduit as in Fig. 4. This further complicates the acoustic analysis since not only the corrections mentioned above, but also corrections for the refraction of the acoustic signals at the solid/liquid interface must be introduced. This refraction takes place according to Snell's Law, i.e.,

$$\sin \phi / C = \sin \phi_p / C_p \tag{9}$$

where C is the sound speed in the liquid and C_p is the sound speed in the intervening material. As a consequence, θ and t_o (f_o) in Eqs. (7) and (8) now become functions of the sound speeds (C, C_p), and hence, in general, of the temperature, pressure, and composition of the process fluid and intervening materials.

2.1.4 Estimating Volumetric Flow. Once the average axial flow velocity along an acoustic path has been found, the volumetric flow rate can be calculated from the following equation:

$$Q = S A \sum_{i=1}^{n} W_i \bar{V}_{axi} \tag{10}$$

where:

A = the average cross-sectional area of the measurement section (L^2)

Q = the volumetric flow rate in the measurement section (L^3/t)

S = a velocity profile correction factor (dimensionless)

$\bar{V}_{axi}$ = the average axial flow velocity along acoustic path i(L/t)

W_i = a weighting factor for acoustic path i that is dependent on measurement section geometry and acoustic path location (dimensionless)

n = the number of acoustic paths

Note that increasing n can reduce the sensitivity of S to flow profile variations.

2.2 Implementation

2.2.1 Primary Device. The primary device consists of a separate spool piece with transducers installed, or an existing section of conduit to which transducers are installed in the field.

2.2.1.1 Measurement Section. The section of conduit in which the volumetric flow rate is sensed by the acoustic signals is called the *measurement section.* This section is bounded at both ends by planes perpendicular to the axis of the section located at the extreme upstream and downstream transducer positions. The measurement section is usually circular in cross section; however, it may be square, rectangular, elliptical, or some other shape.

2.2.1.2 Transducers. The transducers transmit and receive acoustic energy. They may be factory mounted or field mounted by clamping, threading, or bonding. Transducers may be wetted by the liquid or be nonwetted. Wetted transducers may be flush mounted, recessed, or protrude into the flow stream. Some nonwetted transducers may be removed while the line is in service.

2.2.1.3 Acoustic Paths. There may be one (single path) or more (multipath) acoustic paths in the measurement section, each having a pair of transducers. Common

Copyright ASME International
Provided by IHS under license with ASME
No reproduction or networking permitted without license from IHS

Not for Resale

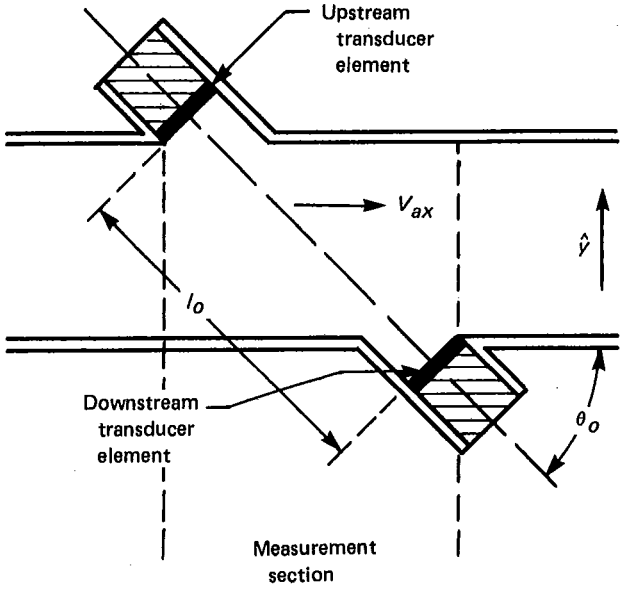

FIG. 1 WETTED TRANSDUCER CONFIGURATION

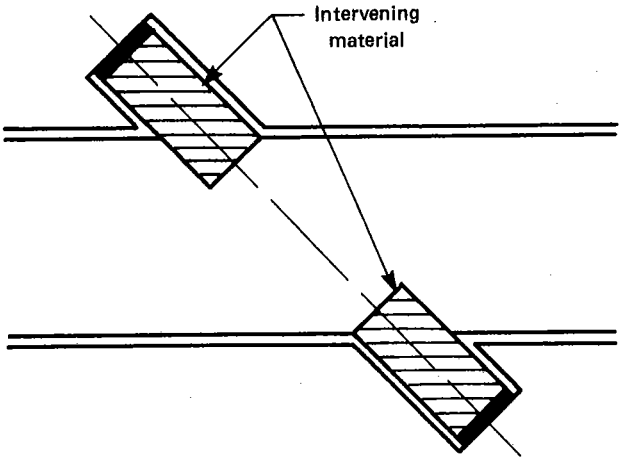

FIG. 3 PROTECTED CONFIGURATION WITH PROTRUSIONS

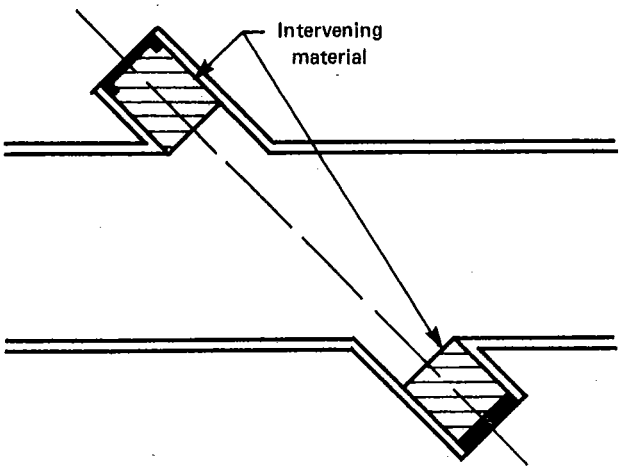

FIG. 2 PROTECTED CONFIGURATION WITH CAVITIES

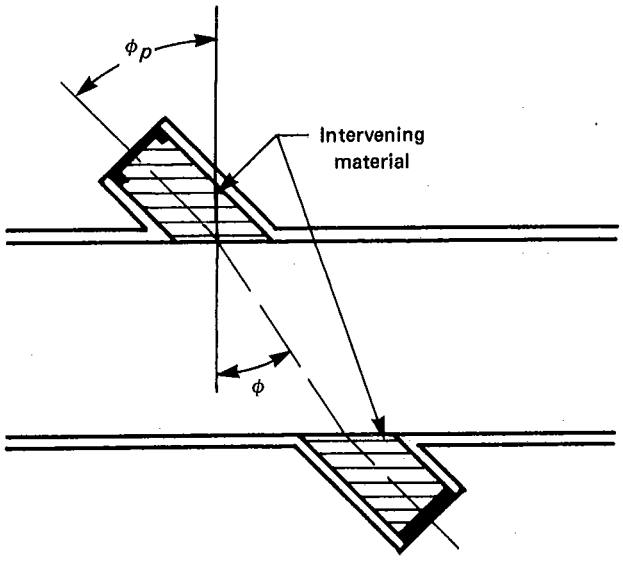

FIG. 4 PROTECTED CONFIGURATION WITH SMOOTH BORE

Copyright ASME International
Provided by IHS under license with ASME
No reproduction or networking permitted without license from IHS
Not for Resale

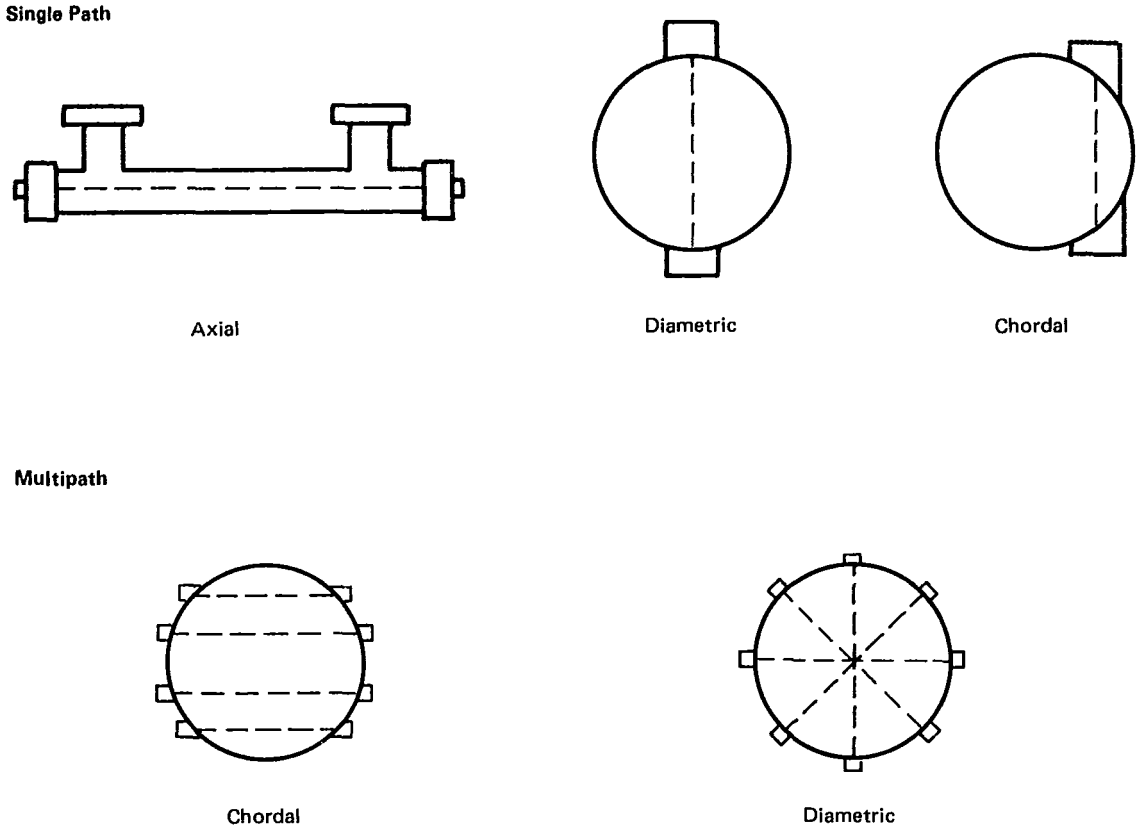

FIG. 5 ACOUSTIC PATH CONFIGURATIONS

types are axial, diametric, and chordal, as shown in Fig. 5.

2.2.2 Secondary Device. The secondary device comprises the electronic equipment required to operate the transducers, make the measurements, process the measured data, and display or record the results.

2.2.2.1 Operation of Transducers. Transducers may be excited simultaneously or alternately with one or more transmissions in each direction. The acoustic frequency and pulse repetition rate may vary. The interconnecting cable lengths between the secondary and primary devices are an important consideration, and their maximum length is usually defined by the manufacturer.

2.2.2.2 Measurement Method. The transit time of an acoustic pulse is usually taken to be the time interval between initial excitation of the transmitter and some characteristic point of the received signal. Exact details vary from one manufacturer to another.

2.2.2.3 Processing of Data. The processing section, in addition to estimating the flow rate from measured transit times, should be capable of rejecting invalid measurements, noise, etc. The indicated flow rate may be the result of one or more individual flow velocity determinations.

2.2.2.4 Displays and Outputs. Most meters have several outputs available, either as standard features or as optional additions to the equipment. Displays may show flow rate, integrated flow volume and/or direction, and may be analog or digital. Signal outputs usually include one or more of the following: current, voltage, digital, and a pulse rate proportional to flow. These outputs may or may not be electrically isolated. Flowmeters may also include alarms and diagnostic aids.

Copyright ASME International
Provided by IHS under license with ASME
No reproduction or networking permitted without license from IHS

Not for Resale

3 ERROR SOURCES AND THEIR REDUCTION

The purpose of this Section is to describe possible error sources for the ultrasonic flowmeters covered by this Standard. Although these errors may not be significant in some cases, they should all be addressed in detail when analyzing the error for a particular flowmeter.

3.1 Axial Velocity Estimate

Axial velocity errors are those errors that are made in the determination of $\bar{V}_{ax}$ across an acoustic path [see Eqs. (5)-(8)].

3.1.1 Acoustic Path Length and Angle. The determination of axial flow velocity ($\bar{V}_{ax}$) is based on the acoustic path length (l_o) and angle (θ). The error in $\bar{V}_{ax}$ is in direct proportion to the uncertainty in the acoustic path length and angle. Acoustic path length and angle errors may be static due to inaccuracies in the initial measurements, or they may be dynamic due to changes in the measurement section or, in the case of refractive systems, changes in the index of refraction of the materials in the acoustic path.

Errors in the acoustic path length or angle for nonrefractive systems can be reduced by accurate geometric and acoustic measurements. For flowmeters in which sound energy undergoes refraction, errors in acoustic path length or angle can be reduced by design and/or compensation based upon knowledge of the speed of sound in the process liquid and intervening materials between the transducer element and the process liquid.

In certain applications, compensation for changes in acoustic path length and angle which result from temperature or pressure induced pipe deformation may be provided for in either refractive or nonrefractive systems.

Systems where the transducers are field mounted can achieve accuracies comparable to systems where the transducers are factory mounted if precise postinstallation measurements are made and the scaling of the electronics is adjusted to reflect these as-built dimensions.

3.1.2 Transit Time

3.1.2.1 Timing. Uncertainty in the transit-time measurement due to limits in internal timing accuracy and resolution lead to a corresponding uncertainty in $\bar{V}_{ax}$.

Errors in the measurement of transit time may be reduced by the use of stable and accurate high frequency oscillators and averaging many individual transit-time measurements. Transit-time measurement errors are the most amenable of all potential errors to analysis.

Transit-time measurement errors due to differences between upstream to downstream and downstream to upstream electronic signal paths may be reduced by using the same detection electronics and transducer pairs for both directions of propagation.

3.1.2.2 Signal Detection. Acoustic transit-time measurements may be affected by inconsistencies in recognition of the received acoustic signal caused by variations in received signal level or waveform and noise.

(*a*) Variations in received signal level or waveform can occur as the acoustic properties of the liquid in the measurement section change because of excessive amounts of entrained air, suspended solids, temperature, pressure, etc., or as transducer fouling occurs. These variations may result in uncertainty in determining the transit time, thus causing uncertainty in $\bar{V}_{ax}$.

(*b*) Noise can affect the accuracy of the transit-time measurement. Noise sources may be either electrical or acoustic, and either external or self-generated. Generally, externally generated electronic or acoustic noise is random with respect to the received signal. Self-generated acoustic noise, however, is usually synchronized with the received signal and is therefore much harder to compensate for in the secondary device.

Signal detection errors are reduced by operating with high signal-to-noise ratios. Methods can be provided that will reject those signals which are excessively attenuated or which are distorted by noise.

If the background noise is caused by external sources, the signal-to-noise ratio can be improved by increasing the transmitted signal level. However, in many cases, the most troublesome noise is self-generated acoustic noise. This noise generally increases as the level of the transmitted signal is increased. The signal-to-noise ratio, in these cases, may be improved by acoustically isolating the transducers from the measurement section by application of damping materials and/or other suitable techniques.

3.1.3 Sound Speed Dependency. The speed of sound in the liquid and in any intervening materials along the acoustic path varies with composition, temperature, and pressure. Depending upon a particular ultrasonic flowmeter's design, l_o, θ, and t_o (f_o) [Eqs. (7) and (8)] may be affected.

In nearly all cases, the errors caused by sound speed variations in the liquid are negligible for a properly implemented, nonrefractive, wetted transducer system. Changes in the speed of sound in the intervening material may, however, require compensation for nonwetted transducer systems.

In refractive systems, changes in the speed of sound in intervening materials and the process liquid affect the acoustic path length and angle. It is possible to compensate for these effects. In rare cases, changes in the speed

Copyright ASME International
Provided by IHS under license with ASME
No reproduction or networking permitted without license from IHS
Not for Resale

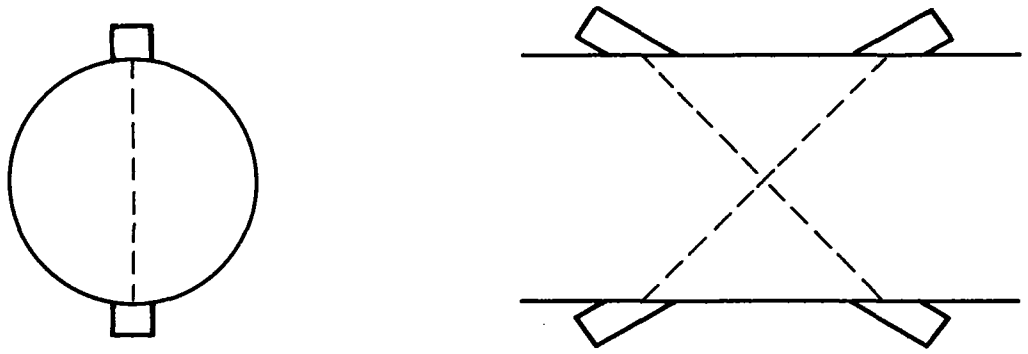

FIG. 6 A TYPICAL CROSS PATH ULTRASONIC FLOWMETER CONFIGURATION (PATHS MAY BE MULTIPATH DIAMETRIC OR CHORDAL)

of sound in the liquid may refract the beam so much that it misses the opposing transducer. Accurate knowledge of the speed of sound in a particular liquid can reduce this possibility.

3.1.4 Secondary Flow. Secondary flow can produce an error in the determination of $\bar{V}_{ax}$ since it is normally assumed in the calculations that all flow is in the axial direction. Secondary flow is a result of flow perturbations occurring upstream or downstream of the measurement section because of devices such as elbows, valves, and pumps. Secondary flow may result in an error in determining the transit time which ultimately affects $\bar{V}_{ax}$.

The most effective way to reduce secondary flow errors is to avoid installations where severe secondary flow exists. Reduction of secondary flow may require long, straight runs of pipe and/or the use of flow straighteners, depending upon the nature of the secondary flow source and the accuracy required. Secondary flow errors can also be reduced by the use of an appropriate acoustic path orientation or by computing line velocities on appropriate multiple acoustic paths, i.e., crossed paths as illustrated in Fig. 6, and averaging.

3.2 Integration

Integration error is the error in the flow rate estimate which occurs in the computation of the flow rate from $\bar{V}_{ax}$, A, S, and W_i as shown in Eq. (10).

3.2.1 Cross Section Dimensional Errors. Error in the assumed cross-sectional area of the measurement section causes an error in the flow rate estimate. This error may be due to initial measurement section shape irregularities, such as out-of-roundness; or it may be due to changes in the initial shape caused by temperature, pressure, or structural loading. It may also be due to the formation of deposits or growths, such as algae, in the measurement section. Usually it is due to combinations of the items mentioned above.

Cross section dimensional errors can be reduced by manufacturing or choosing a measurement section which has constant dimensions along its length, can be accurately measured, and has a stable surface so that cross section changes with time due to corrosion, material buildup, or loss of protective coatings will be small. Additionally, if temperatures or pressures are expected to be substantially different from reference conditions, it may be necessary to adjust the measured dimensions to compensate for dimensional changes that may occur under operating conditions.

In circular pipes, cross section dimensional errors can be reduced by minimizing the effects of out-of-roundness through averaging of diameter measurements made at the upstream, middle, and downstream ends of the measurement section.

The measurement section should be inspected periodically to determine if the dimensional factor should be adjusted to compensate for observed changes.

3.2.2 Acoustic Path Location. The acoustic path location, particularly in multipath flowmeters, is an important contributor to overall flowmeter accuracy. The uncertainty in the position of the acoustic path can cause errors through improper assignment of a weighting factor (W_i) and by causing unnecessary sensitivity of $\bar{V}_{ax}$ to the velocity profile through nonoptimum placement of transducers.

Errors due to acoustic path location can be reduced by suitable manufacturing techniques in the case of a prefabricated measurement section or by accurately determining the acoustic path for systems where the transducers are field mounted. Path locations can be

Copyright ASME International
Provided by IHS under license with ASME
No reproduction or networking permitted without license from IHS

Not for Resale

determined in a variety of ways, but probably the most accurate involves optical determination of both the acoustic path location and angle within the measurement section.

3.2.3 Velocity Profile. Ultrasonic flowmeters are affected by variations in flow profile because uncertainty in the velocity profile causes an error in $\bar{V}_{ax}$ that may not be compensated for by the velocity profile correction factor S. This error may affect both the linearity and the value of the flow rate estimate. Velocity profile variations can be caused by changes in flow rate (both transient and steady state), wall roughness, temperature, viscosity, upstream or downstream hydraulic conditions, transducer projections, and transducer cavities. In the absence of upstream and downstream hydraulic effects, the Reynolds number and friction factor of the measurement section would be sufficient to determine the velocity profile correction factor S.

There usually is a difference between the actual velocity profile and that assumed in the flowmeter's computations. Since most flowmeter computations assume a fully developed velocity profile, errors can be reduced by placing the measurement section as far as possible from bends, valves, tees, transitions, etc. These errors can also be reduced by using a more accurate model of the actual velocity profile, or in general, by increasing the number of acoustic paths.

3.3 Computation

There is a degree of error associated with the computations made by the electronic circuits because of the finite limits in processing accuracies. However, this error will normally be negligible.

Computation errors due to electronics malfunction can be reduced by using built-in, self-checking features in the processor.

3.4 Calibration

Calibration is an alternative means for reducing errors resulting from uncertainties in path length and angle, cross section, and path location. Velocity profile errors can be corrected with *in situ* calibration or by properly simulated laboratory calibrations.

There is an uncertainty in the flow rate estimate that results from errors involved in the procedure used to calibrate an ultrasonic flowmeter. To reduce calibration uncertainty, calibration should be conducted according to national (ANSI) or international (ISO) standards.

3.5 Equipment Degradation

Performance errors may arise due to fouling or physical degradation of the equipment. Equipment design should include reasonable tolerance to changes in component values and process conditions. The equipment should also indicate when degradation of flowmeter performance occurs. The probability of error can be reduced considerably by including suitable self-test or diagnostic circuits in the equipment.

4 APPLICATION GUIDELINES

4.1 Performance Parameters

By evaluating the performance parameters listed below, a user should be better able to predict the performance of a given ultrasonic flowmeter in a specific application, as well as compare its performance to other ultrasonic flowmeters. These parameters are limited to those which can be substantiated by test or well-established computational methods. (It should be emphasized that the following performance parameters are normally determined by the manufacturer under specific reference conditions that will, in general, differ from the user's actual conditions.) Subjective or nonperformance parameters, such as convenience of installation, reliability, and cost, are left to the individual user for evaluation. In each case below, the range and conditions applicable to each parameter should be specified.

4.1.1 Accuracy. Accuracy describes the uncertainty of a measured value as compared to its true value and is commonly reported as a percentage of actual flow, span, or full scale. The preferred method is to specify the maximum deviation (in percent) between measured flow and actual flow (see also ANSI/ASME MFC-1M, Glossary of Terms Used in the Measurement of Fluid Flow in Pipes).

4.1.2 Linearity. The data obtained by test of any instrument consists of points scattered around a smooth curve that represents the nominal characteristic of the instrument. Linearity is the maximum deviation, at any flow rate, of that smooth curve from a least squares linear fit to the data and should be reported as a percentage of that flow rate.

4.1.3 Repeatability. Repeatability is the ability of a flowmeter to return to a previously indicated flow rate after a deviation in either direction from and return to the flow conditions which caused that indicated flow rate. It also includes readout variations under constant flow conditions. Repeatability should be reported as the maximum expected deviation between these indicated flow rates expressed as a percentage of the flow rate

Copyright ASME International
Provided by IHS under license with ASME
No reproduction or networking permitted without license from IHS
Not for Resale

indication (see also ANSI/ASME MFC-1M, Glossary of Terms Used in the Measurement of Fluid Flow in Pipes).

4.1.4 Stability. Stability is a measure of change in accuracy with time. It should be reported as the maximum deviation in accuracy, as a percentage of actual flow, which can be expected to occur over a specified time period (subject to constant hydraulic conditions).

4.1.5 Resolution. Resolution is the minimum change in actual flow required to produce an observable change in the output of the equipment.

4.1.6 Rangeability. Rangeability is the maximum and minimum flow rates over which the performance is specified (see also ANSI/ASME MFC-1M, Glossary of Terms Used in the Measurement of Fluid Flow in Pipes).

4.1.7. Response Time. Response time is the time it takes, following a step change in the flow rate, for the flowmeter's output to indicate a change in flow rate equal to 63% of the step change.

4.1.8 Power Requirements. The power requirements of the flowmeter, including voltage and frequency tolerances necessary for proper performance, as well as the flowmeter's power consumption, should be clearly specified.

4.2 Installation Considerations

4.2.1 Introduction. Many of the error sources listed in Section 3 can be reduced or eliminated by proper installation. Errors the user should address during the design phase of a project are listed below.

4.2.2 Acoustic Path Length and Angle. Changes in acoustic path length and angle can be caused by significant temperature or pressure changes as well as external loading of the meter section. The installation location should be chosen to minimize these effects.

4.2.3 Signal Detection. Suspended solids, fouling, entrained air, or cavitation (caused by upstream equipment or even the meter itself) may degrade accuracy or prevent operation by attenuating the acoustic signal. Electrical interference and acoustic noise caused by mechanical vibration or cavitation can also interfere with the meter's operation.

4.2.4 Multiple Fluids. Metering fluids with widely differing acoustic properties may require multiple primary devices (spool pieces) due to excessive acoustic beam angular variations in refractive systems and/or excessive signal loss due to acoustic mismatch or attenuation. Under these conditions the manufacturer should be consulted.

4.2.5 Secondary Flow. Secondary flow directly affects a meter's performance and should be considered in the design of the installation and in the selection and orientation of a meter. In general, the meter should be placed as far as possible from upstream elbows, transitions, valves, etc.

4.2.6 Integration. Flow profile changes and dimensional changes in the measurement section, including those caused by corrosion, erosion, or material buildup, directly affect meter performance and should be considered in the selection, location, and orientation of a meter.

The measurement section should be inspected periodically to determine if the cross section area factor K or profile correction factor S should be adjusted to compensate for observed changes.

4.2.7 Calibration. Installation considerations and the required installed accuracy usually determine the method of calibration.

5 METER FACTOR DETERMINATION AND VERIFICATION

There are three principal methods of meter factor determination:

(*a*) laboratory calibration
(*b*) field calibration
(*c*) analytical procedures

The first two can be used to verify meter performance.

5.1 Laboratory Calibration

Laboratory calibrations should be conducted at facilities where the procedures are in accordance with national or international standards.

The calibration tests should generally be run using water that is free from acoustically interfering entrained air or solid particles. Standard calibrations should be conducted using flows that are as free as possible from swirl, nonaxisymmetric flow, and pulsation. Generally, these conditions have been achieved by using sufficient lengths of straight pipe upstream and downstream of the measurement section and, if necessary, by installing upstream flow conditioners.

The extent to which the above conditions have been achieved can be determined by noting the sensitivity of the meter factor to rotation and translation of the primary device.

A statistically significant number of runs should be made over a range of flow rates. Flowmeter accuracy,

Copyright ASME International
Provided by IHS under license with ASME
No reproduction or networking permitted without license from IHS

Not for Resale

within the uncertainty of the laboratory standards, should be determined by the combined random and systematic errors in the measurement of the volumetric flow rate.

Special calibration tests may also be performed for those cases where the piping in the final installation may produce nonaxisymmetric flow or where other flow irregularities are suspected. This will require appropriate modeling of upstream and downstream piping.

5.2 Field Calibration

Field calibration, as opposed to laboratory calibration, has the advantage that true operating conditions are encountered. The major disadvantage may be a greater degree of uncertainty in the accuracy of the standards that are employed. In some cases, these secondary standards may be considerably less accurate than the ultrasonic flowmeter being calibrated.

5.3 Analytical Procedures

Analytical procedures are often the only available technique for meter factor determination. This is particularly true for very high flow rates and large line sizes. These procedures require physical measurements as well as instructions and data supplied by the manufacturer. The uncertainty in the meter performance should reflect uncertainties associated with these procedures as well as those error sources outlined in Section 3.

Copyright ASME International
Provided by IHS under license with ASME
No reproduction or networking permitted without license from IHS

Not for Resale

APPENDIX A
ACOUSTIC TRANSIT TIME IN A NONUNIFORM FLUID VELOCITY FIELD

(This Appendix is not an integral part of ANSI/ASME MFC-5M-1985 and is included for information purposes only.)

In the case of a nonuniform axial flow field, it can be shown that the length l of the acoustic path, which in this case is not a straight line, is given to second order by:

$$l = l_o(1 + a)$$

where l_o is the straight line distance connecting the centers of the faces of the acoustic transmitter and receiver (see Fig. 1) and

$$a = \frac{1}{2\sin^2\theta_o}\left(\frac{\bar{V}_{ax}^2 - \bar{V}_{ax}^2}{C_o^2}\right)$$

where θ_o is the angle of l_o with respect to the pipe axis, and $\bar{V}_{ax}$ and $\bar{V}_{ax}^2$ are averages of the liquid axial velocity profile. To the degree that $a \ll 1$, the effective path of the acoustic ray can be taken to be a straight line equal to l_o. This being the case, the apparent speed of sound at any given point, for an acoustic pulse traveling upstream along this straight line path, is given by

$$C_{\text{up}} \simeq C_o\sqrt{1 - \left(\frac{V_{ax}}{C_o}\right)^2 \sin^2\theta_o} - V_{ax}\cos\theta_o$$

while that for the downstream pulse is given by

$$C_{\text{down}} \simeq C_o\sqrt{1 - \left(\frac{V_{ax}}{C_o}\right)^2 \sin^2\theta_o} + V_{ax}\cos\theta_o$$

The transit times for upstream and downstream acoustic pulses (t_{up}, t_{down}) are given respectively by:

$$t_{\text{up}} \simeq \int_o^{l_o} \frac{dl}{C_{\text{up}}} = \frac{1}{C_o}\int_o^{l_o} \frac{dl}{\sqrt{1 - \left(\frac{V_{ax}}{C_o}\right)^2 \sin^2\theta_o} - \frac{V_{ax}}{C_o}\cos\theta_o}$$

$$t_{\text{up}} \simeq \frac{1}{C_o}\int_o^{l_o} \frac{\sqrt{1 - \left(\frac{V_{ax}}{C_o}\right)^2 \sin^2\theta_o} + \frac{V_{ax}}{C_o}\cos\theta_o}{\left[1 - \left(\frac{V_{ax}}{C_o}\right)^2\right]} dl$$

Copyright ASME International
Provided by IHS under license with ASME
No reproduction or networking permitted without license from IHS
Not for Resale

and

$$t_{\text{down}} \simeq \frac{1}{C_o} \int_o^{l_o} \frac{\sqrt{1 - \left(\frac{V_{ax}}{C_o}\right)^2 \sin^2 \theta_o} - \frac{V_{ax}}{C_o} \cos \theta_o}{\left[1 - \left(\frac{V_{ax}}{C_o}\right)^2\right]} \, dl$$

To the extent that $(V_{ax}/C_o)^2 \ll 1$, these equations reduce to

$$t_{\text{up}} \simeq \frac{l_o}{C_o} \left(1 + \frac{\bar{V}_{ax}}{C_o} \cos \theta_o\right)$$

and

$$t_{\text{down}} \simeq \frac{l_o}{C_o} \left(1 - \frac{\bar{V}_{ax}}{C_o} \cos \theta_o\right)$$

where

$$\bar{V}_{ax} = \frac{1}{l_o} \int_o^{l_o} V_{ax} \, dl \simeq \frac{1}{l_o} \int_o^D \frac{V_{ax}(y) \, dy}{\sin \theta_o}$$

$$= \frac{1}{D} \int_o^D V_{ax}(y) \, dy$$

Taking the difference of the reciprocal of these transit times leads to

$$\frac{1}{t_{\text{down}}} - \frac{1}{t_{\text{up}}} \simeq \frac{C_o}{l_o \left(1 - \frac{\bar{V}_{ax}}{C_o} \cos \theta_o\right)} - \frac{C_o}{l_o \left(1 + \frac{\bar{V}_{ax}}{C_o} \cos \theta_o\right)}$$

$$\simeq \frac{2 \bar{V}_{ax} \cos \theta_o}{l_o \left[1 - \cos^2 \theta_o \left(\frac{\bar{V}_{ax}}{C_o}\right)^2\right]}$$

To the extent that $\cos^2 \theta_o (\bar{V}_{ax}/C_o)^2 \ll 1$, this result reduces to

$$\bar{V}_{ax} \simeq \frac{l_o}{2 \cos \theta_o} \left(\frac{\Delta t}{t_{\text{down}} \, t_{\text{up}}}\right)$$

where $\Delta t = t_{\text{up}} - t_{\text{down}}$.

The above relationship is valid to the degree that the following three conditions are met:

(*a*) $$a = \frac{1}{2 \sin^2 \theta_o} \left(\frac{\bar{V}_{ax}{}^2 - \bar{V}_{ax}{}^2}{C_o{}^2}\right) \ll 1$$

(*b*) $$\left(\frac{V_{ax}}{C_o}\right)^2 \ll 1$$

Copyright ASME International
Provided by IHS under license with ASME
No reproduction or networking permitted without license from IHS
Not for Resale

(*c*) $$\cos^2 \theta_o \left(\frac{\bar{V}_{ax}}{C_o}\right)^2 \ll 1$$

Assuming the worst case, i.e., that velocity profile which results in the most stringent conditions, these inequalities reduce to:

(*a*) $$\frac{1}{2 \sin^2 \theta_o} \left(\frac{V_{ax}}{C_o}\right)^2_{\text{max.}} \ll 1$$

(*b*) $$\left(\frac{V_{ax}}{C_o}\right)^2_{\text{max.}} \ll 1$$

(*c*) $$\cos^2 \theta_o \left(\frac{V_{ax}}{C_o}\right)^2_{\text{max.}} \ll 1$$

In most practical cases the middle condition is the limiting one.

Copyright ASME International
Provided by IHS under license with ASME
No reproduction or networking permitted without license from IHS
Not for Resale

APPENDIX B
SELECTION GUIDELINES

(This Appendix is not an integral part of ANSI/ASME MFC-5M-1985 and is included for information purposes only.)

This Appendix is intended to assist in selecting the most appropriate ultrasonic flowmeter for a particular application. Since there are many variations and differences even among the same types of flowmeters, this Appendix addresses itself only to the major differences between the types. It is suggested that the application conditions be discussed with the manufacturers prior to a decision on a particular type of flowmeter.

B1 SINGLE PATH VERSUS MULTIPATH INSTRUMENTS

Single path instruments are usually lower in cost than multipath instruments. They are also less complex, and therefore usually somewhat simpler to install. Multipath flowmeters can exhibit better performance than single path meters under the variable and/or nonideal velocity profile distribution conditions caused by changing Reynolds number, changes in friction factor, and the effects caused by upstream and downstream elbows, valves, or other sources of flow disturbance. The choice of path orientations varies among manufacturers. It can be either crossed or parallel, either chordal or diametric. Choice of the most appropriate path distribution should be made after a full discussion of the application conditions with the various manufacturers.

B2 EXTERNALLY MOUNTED VERSUS INSERT-TYPE TRANSDUCERS

Externally mounted transducers are the simplest to install on existing pipe and, since they do not require any extensive pipe preparation, are less expensive to install than insert systems. Since the pipe inner wall is undisturbed, there is no flow disturbance in the vicinity of the transducers. They can also be easily removed without requiring shutdown of the process. Since these systems utilize a beam that refracts into the liquid, they may be affected by variations in the sonic properties of the liquid and the pipe. The manufacturer should be contacted to ensure that the expected application conditions can be handled with satisfactory performance.

Insert type systems can be of two types – those using wetted transducers and those where the transducers are installed in a protective well. Where the transducer faces and protective surfaces are orthogonal to the acoustic path, these systems can offer greater immunity to changes in the sonic velocity of the liquid since refraction of the beam does not take place. Since these systems usually either have the transducer recessed in a cavity or protruding into the liquid beyond the pipe wall, a local flow disturbance results which may affect the meters performance. Although reportedly rare, the transducer cavity could collect debris.

Those insert systems where this well is filled with a protective window result in refraction of the beam through the liquid and require either relatively constant sonic velocity or compensation in the secondary device.

NOTE: If very large changes in sonic velocity occur, refraction may cause the sonic beam to miss the opposing transducer.

Insert type systems may provide greater acoustic power since they avoid the transmission loss through the pipe wall. They may also, in some cases, offer a greater signal-to-noise ratio since they avoid some of the pipe borne, self-generated noise which may affect externally installed systems.

Copyright ASME International
Provided by IHS under license with ASME
No reproduction or networking permitted without license from IHS
Not for Resale