ASME MFC-4M 86 ■ 0759670 0049442 9 ■

F-57-03

AN AMERICAN NATIONAL STANDARD

Measurement of Gas Flow by Turbine Meters

ANSI/ASME MFC-4M–1986

SPONSORED AND PUBLISHED BY

THE AMERICAN SOCIETY OF MECHANICAL ENGINEERS

United Engineering Center 345 East 47th Street New York, N. Y. 10017

Copyright ASME International
Provided by IHS under license with ASME
No reproduction or networking permitted without license from IHS

Not for Resale

Date of Issuance: July 15, 1986

This Standard will be revised when the Society approves the issuance of a new edition. There will be no addenda or written interpretations of the requirements of this Standard issued to this Edition.

This code or standard was developed under procedures accredited as meeting the criteria for American National Standards. The Consensus Committee that approved the code or standard was balanced to assure that individuals from competent and concerned interests have had an opportunity to participate. The proposed code or standard was made available for public review and comment which provides an opportunity for additional public input from industry, academia, regulatory agencies, and the public-at-large.

ASME does not "approve," "rate," or "endorse" any item, construction, proprietary device, or activity.

ASME does not take any position with respect to the validity of any patent rights asserted in connection with any items mentioned in this document, and does not undertake to insure anyone utilizing a standard against liability for infringement of any applicable Letters Patent, nor assume any such liability. Users of a code or standard are expressly advised that determination of the validity of any such patent rights, and the risk of infringement of such rights, is entirely their own responsibility.

Participation by federal agency representative(s) or person(s) affiliated with industry is not to be interpreted as government or industry endorsement of this code or standard.

ASME accepts responsibility for only those interpretations issued in accordance with governing ASME procedures and policies which preclude the issuance of interpretations by individual volunteers.

No part of this document may be reproduced in any form,
in an electronic retrieval system or otherwise,
without the prior written permission of the publisher.

Copyright © 1986 by
THE AMERICAN SOCIETY OF MECHANICAL ENGINEERS
All Rights Reserved
Printed in U.S.A.

Copyright ASME International
Provided by IHS under license with ASME
No reproduction or networking permitted without license from IHS

Not for Resale

FOREWORD

(This Foreword is not part of ANSI/ASME MFC-4M–1986.)

The purpose of this Standard is to provide guidance and recommendation in the application of turbine meters for gas measurement.

This Standard was prepared by Subcommittee No. 8 — Turbine Meters, of the ASME Standards Committee on Measurement of Fluid Flow in Closed Conduits. It represents current practice.

This Standard on gas turbine meters complements the following two published American National Standards on liquid turbine meters:

(*a*) ANSI Z11.299-1971 (API Standard 2534), Measurement of Liquid Hydrocarbons by Turbine Meter Systems

(*b*) ANSI/ISA-RP31.1-1977, Recommended Practice — Specification, Installation, and Calibration of Turbine Flowmeters

This Standard was approved as an American National Standard on April 14, 1986.

Copyright ASME International
Provided by IHS under license with ASME
No reproduction or networking permitted without license from IHS
Not for Resale

ASME STANDARDS COMMITTEE
Measurement of Fluid Flow in Closed Conduits

(The following is the roster of the Committee at the time of approval of this Standard.)

OFFICERS

R. W. Miller, *Chairman*
W. F. Z. Lee, *Vice Chairman*
K. Wessely, *Secretary*

COMMITTEE PERSONNEL

R. B. Abernathy, Pratt & Whitney Aircraft, West Palm Beach, Florida
J. W. Adam, Houston, Texas
N. A. Alston, Dieterich Standard Corporation, Boulder, Colorado
H. P. Bean, El Paso Natural Gas Company, El Paso, Texas
S. R. Beitler, The Ohio State University, Columbus, Ohio
M. Bradner, The Foxboro Company, Foxboro, Massachusetts
E. E. Buxton, Flow Measurement Consultant, St. Albans, West Virginia
J. Castorina, U.S. Navy, Philadelphia, Pennsylvania
G. P. Corpron, Rosemount Inc., Eden Prairie, Minnesota
C. F. Cusick, Philadelphia, Pennsylvania
L. A. Dodge, Richmond Heights, Ohio
R. L. Galley, Flow Measurement Consultant, Antioch, California
L. J. Kemp, South California Gas Company, Los Angeles, California
D. R. Keyser, U.S. Navy, Warminster, Pennsylvania
C. P. Kittredge, Princeton, New Jersey
W. F. Z. Lee, Rockwell International, Pittsburgh, Pennsylvania
E. D. Mannherz, Fischer & Porter Company, Warminster, Pennsylvania
G. E. Mattingly, National Bureau of Standards, Washington, DC
R. W. Miller, The Foxboro Company, Foxboro, Massachusetts
R. V. Moorse, Union Carbide Corporation, Tonawanda, New York
W. M. Reese, Jr., Arlington, Texas
H. E. Snider, AWWA Standards, Kansas City, Missouri
D. A. Sullivan, Fern Engineering, Bourne, Massachusetts
R. G. Teyssandier, Daniel Industries, Inc., Houston, Texas
J. S. Yard, Fischer & Porter Company, Warminster, Pennsylvania

SUBCOMMITTEE NO. 8 — TURBINE METERS

W. F. Z. Lee, *Chairman,* Municipal & Utility Division, Rockwell International
J. W. Adam,* Dresser Measurement Division, Dresser Industries, Inc.
J. S. Castorina, Naval Ship Engineering Center, Philadelphia Division
R. B. Crawford,* Diatech
D. F. Kee,* American Meter Division, Singer Company
L. J. Kemp,* Southern California Gas Company
G. G. Less,* Natural Gas Pipeline Company of America
M. H. November, ITT – Barton
W. O. Strohmeier, Fischer and Porter Company
R. G. Teyssandier, Daniel Industries, Inc.
E. L. Upp,* Daniel Industries, Inc.
C. R. Varner, Pratt & Whitney Aircraft
M. P. Wilson, Jr., University of Rhode Island

*former members

Copyright ASME International
Provided by IHS under license with ASME
No reproduction or networking permitted without license from IHS
Not for Resale

CONTENTS

Foreword iii
Standards Committee Roster v

Introduction 1
1 Scope 3
2 Symbols and Definitions 3
3 Construction 4
4 Installation 6
5 Operation 10
6 Performance Characteristics 11
7 Data Computation and Presentation 13
8 Calibration Methods 16
9 Field Checks 17

Figures
1 Schematic Drawings of Axial Flow Gas Turbine Meters 5
2 Recommended Installation of an In-Line Gas Turbine Meter (Minimum Lengths) 8
3 Short Coupled Installation of an In-Line Gas Turbine Meter (Minimum Lengths) 8
4 Close Coupled Installation of an In-Line Gas Turbine Meter With Integral Straightening Vanes 9
5 Recommended Installation of an Angle Body Gas Turbine Meter (Minimum Lengths) 9
6 Accuracy Curve of a High Pressure Gas Turbine Meter Plotted Against Reynolds Number (Linear Scale) at Various Line Pressures Where Rotor Slip Due to Nonfluid Drag Is Insignificant 14

Tables
1 Symbols 4
2 Blowdown Valve Sizing 7

Copyright ASME International
Provided by IHS under license with ASME
No reproduction or networking permitted without license from IHS
Not for Resale

ANSI/ASME MFC-4M-1986
AN AMERICAN NATIONAL STANDARD

AN AMERICAN NATIONAL STANDARD

MEASUREMENT OF GAS FLOW BY TURBINE METERS

INTRODUCTION

The axial flow type turbine meter is a velocity measuring device in which the flow is parallel to the rotor axis and the speed of rotation is proportional to the rate of flow. The volume of gas measured is determined by counting the revolutions of the rotor.

The gas turbine meter is used in all phases of natural gas operations: production, transmission, and distribution. It has also been used on a variety of industrial and commercial gases.

This Standard is produced to provide guidance to the designer, the operator, and others concerned with the use of the turbine meter for gas measurement.

Copyright ASME International
Provided by IHS under license with ASME
No reproduction or networking permitted without license from IHS
Not for Resale

AN AMERICAN NATIONAL STANDARD

MEASUREMENT OF GAS FLOW BY TURBINE METERS

1 SCOPE

(*a*) This Standard applies to:

(*1*) axial full-flow turbine meters with mechanical and/or electrical outputs whose rotating member is driven by a compressible fluid;

(*2*) the measurement of gas by a turbine meter; the meter's construction, installation, operation, performance characteristics, data computation and presentation, calibration, field checking, and other related considerations of the meter.

(*b*) This Standard does not apply to:

(*1*) accessory equipment used to measure pressure and temperature, and/or density for the accurate determination of mass or base volumes, or those accessories used to automatically compute mass or base volumes;

(*2*) steam metering or two-phase flow measurement;

(*3*) applications involving pulsating flow or fluctuating flows where adverse effects on meter accuracy can be anticipated.

2 SYMBOLS AND DEFINITIONS

Much of the vocabulary and many of the symbols used in this Standard are defined in ANSI/ASME MFC-1M-1979, Glossary of Terms Used in the Measurement of Fluid Flow in Pipes. Others that are unique in the field under consideration or with special technical meanings are given in Table 1, and in para. 2.1. Where a term has been adequately defined in the main text, reference is made to the appropriate clause or paragraph.

2.1 Definitions

base flow rate — flow rate calculated from flowing conditions to base conditions of pressure and temperature

base pressure — a specified reference pressure to which a gas volume at flowing conditions is reduced for the purpose of billing and transfer accounting. It is generally taken as 14.73 psia (101.560 kPa) by the gas industry in the USA.

base temperature — a specified reference temperature to which a gas volume at flowing conditions is reduced for the purpose of billing and transfer accounting. It is generally taken as 60°F (15.56°C) by the gas industry in the USA.

base volume — volume of the fluid at base pressure and temperature

flowing pressure — static pressure of the fluid at the turbine rotor in actual operation

flowing temperature — the temperature of the fluid when passing through the turbine rotor in actual operation

meter pressure tap — the pressure tap provided and identified by the manufacturer on the meter body to enable the metering static pressure at the turbine rotor to be measured

rated conditions — conditions of pressure, temperature, and gas composition as specified by manufacturer that rates the meter

Reynolds number — a dimensionless parameter expressing the ratio between inertia and viscous forces. It is given by the formula

$$Re = \frac{V\ell}{\upsilon}$$

where

V = the average spatial fluid velocity
ℓ = a characteristic dimension of the system in which the flow occurs
υ = the kinematic viscosity of the fluid

pipe Reynolds number — expressed by the formula

$$Re_p = \frac{V_p D}{\upsilon}$$

where

D = diameter of the inlet pipe which is of the same nominal size as the meter
V_p = average fluid velocity in the inlet pipe

Copyright ASME International
Provided by IHS under license with ASME
No reproduction or networking permitted without license from IHS
Not for Resale

TABLE 1 SYMBOLS

Symbol	Quantity	Dimensions [Note (1)]	U.S. Units	SI Units
F_{pb}	Pressure base factor	Dimensionless	. . .	. . .
F_{pf}	Flowing pressure factor	Dimensionless	. . .	. . .
F_{pv}	Supercompressibility factor	Dimensionless	. . .	. . .
F_{tb}	Temperature base factor	Dimensionless	. . .	. . .
F_{tf}	Flowing temperature factor	Dimensionless	. . .	. . .
G	Specific gravity of gas (dry air = 1.00)	Dimensionless	. . .	. . .
K	Calibration factor	L^{-3}	pulses/ft^3	pulses/m^3
N	Number of moles of gas	M	lbm-mole	mole
p	Static absolute pressure	$ML^{-1}T^{-2}$	lbf/ft^2 abs	Pa abs
P	Static gage pressure	$ML^{-1}T^{-2}$	lbf/ft^2 gage	Pa gage
ΔP	Meter pressure loss	$ML^{-1}T^{-2}$	lbf/ft^2	Pa
Q	Volume flow rate	L^3T^{-1}	ft^3/hr	m^3/s
R	Universal gas constant	$L^2T^{-2}\theta^{-1}$	ft · lbf/(lbm-mole · °R)	J/(mole · K)
s	Compressibility ratio	Dimensionless		
T	Absolute temperature	θ	°R	K
V	Gas volume passed	L^3	ft^3	m^3
M	Gas mass passed	M	lbm	kg
Z	Compressibility factor	Dimensionless		
ρ	Mass density of gas	ML^{-3}	lbm/ft^3	kg/m^3

Subscript	Description
a	Atmospheric conditions
b	Base conditions of temperature, pressure, and gas composition
f	Flowing conditions of temperature, pressure, and gas composition
r	Rated conditions of temperature, pressure, and gas composition as specified by manufacturer

NOTE:
(1) Fundamental dimensions: M = mass; L = length; T = time; θ = temperature

turbine meter — velocity measuring device in which the primary device is an axial flow type turbine whose rotating member is driven by the fluid and essentially all the fluid passes through the rotating member

3 CONSTRUCTION

3.1 General

The axial flow type gas turbine meter consists of three basic components:

(*a*) the body
(*b*) the measuring mechanism
(*c*) the output and readout device

Schematics of axial flow gas turbine meters are shown in Fig. 1. The flow enters the meter and is directed to the annular passage formed by the inlet nose cone and the interior wall of the body. The fluid enters the rotor and, due to the angle of the blades, imparts a force to rotate the blading. The ideal speed of the rotor is directly proportional to the flow rate. The actual rotational speed of the rotor is a function of the passageway size and shape, and the rotor design. It is also dependent upon the load that is imposed on the rotor system due to internal mechanical friction, fluid drags, external loading, and fluid density.

3.2 Body

The body and all other parts comprising the fluid-containing structure of a turbine meter are designed to handle the pressures and temperatures for which they are rated.

Body connections should be designed in accordance with ANSI flange standards or appropriate threaded connection standards. Other accepted standards could be used. Bodies should be constructed of any material suitable for the service conditions to be encountered.

All components forming the pressure vessel will be hydrostatically pressure tested to a minimum of 1.5 × the maximum allowable operating pressure. The duration of the test shall be in accordance with ANSI B16.5 or other recognized, applicable standards.

Bodies should be badged or marked to show the manufacturer's name or trademark, serial number, pressure rating, and maximum capacity in actual volume flow rate units.

Copyright ASME International
Provided by IHS under license with ASME
No reproduction or networking permitted without license from IHS

Not for Resale

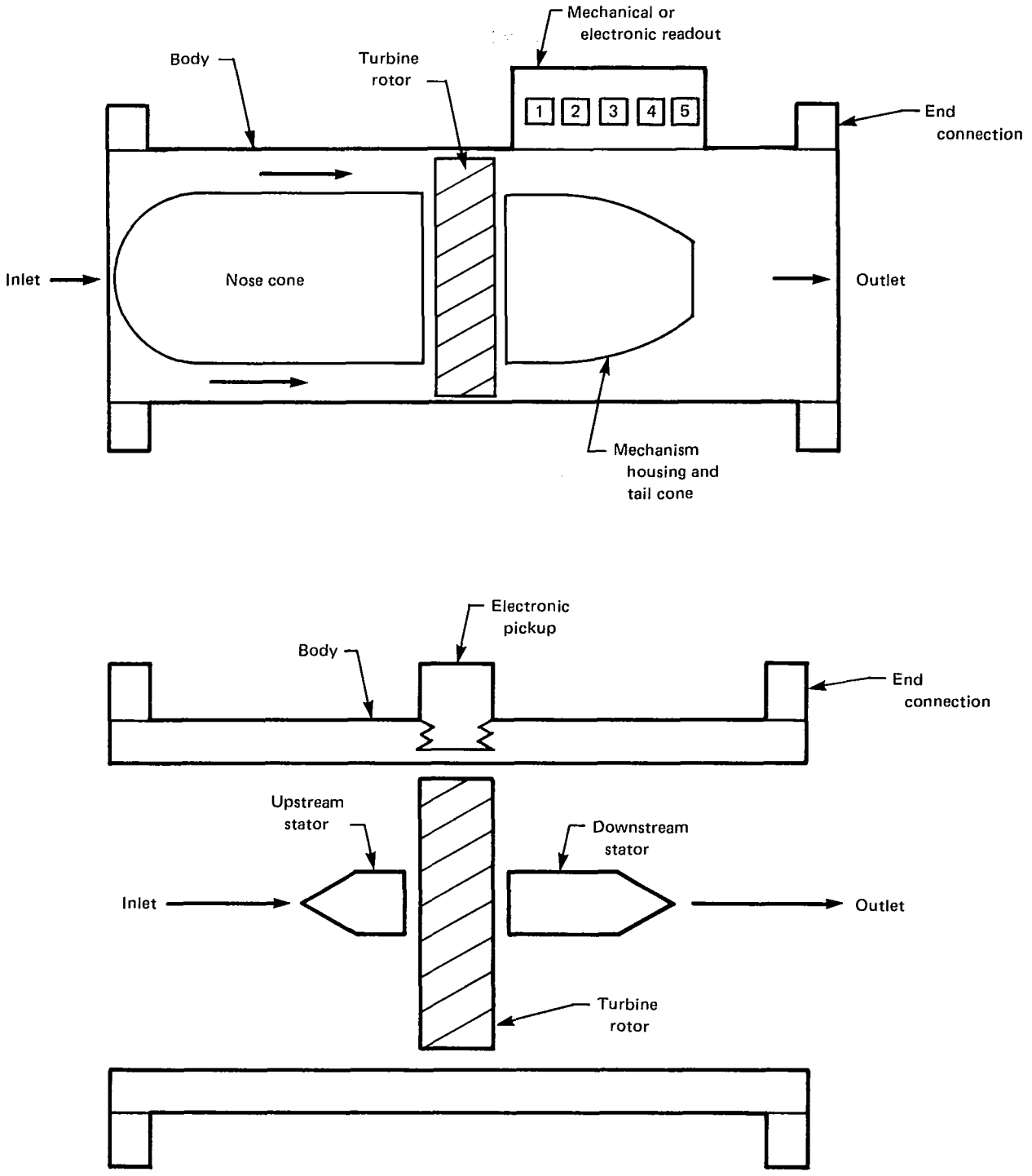

FIG. 1 SCHEMATIC DRAWINGS OF AXIAL FLOW GAS TURBINE METERS

Copyright ASME International
Provided by IHS under license with ASME
No reproduction or networking permitted without license from IHS

Not for Resale

The body should be clearly and permanently marked with the word INLET on the inlet connection end or an arrow on the body side pointing the direction of flow.

3.3 Measuring Mechanism

The measuring mechanism consists of the rotor, rotor shafting, bearings, and the necessary supporting structure.

There are two general mechanism configurations categorized by the way they are installed in the meter body:

(*a*) *Top or Side Entry Type* — the measuring mechanism is removable, as a unit, through a top or side flange without disturbing the end connections

(*b*) *End Entry Type* — the measuring mechanism is removable, either as a unit or as separate pieces, through the end connections

The measuring mechanism should be permanently identified if it is removable as a unit with the following information:

(*a*) mechanism serial number

(*b*) direction of flow if module mounting is reversible

3.4 Output and Readout Device

Turbine meters are available with mechanical drive and/or electrical pulse outputs.

For mechanical drive output meters, the output consists of shafting, gearing, and other drive components needed to transmit the indicated rotor revolutions outside the body for uncorrected (line) volume registration. Meters should be marked near the output shaft to indicate the direction of rotation and the nominal uncorrected volume per revolution. The intermediate gearing should be marked with the basic gear ratio, not including the change gears. If used, change gears should be stamped with the size, and the number of teeth.

For electrical pulse output meters, the output includes the pulse detector system and all electrical connections necessary to transmit the indicated rotor revolutions outside the body for uncorrected volume registration. Meters should be marked to indicate the proper electrical connections and the number of pulses per unit of uncorrected volume.

The readout devices may be of any form suitable for the application.

4 INSTALLATION

4.1 General

The turbine meter is a velocity measuring device. The piping configuration immediately upstream of the meter should be such that the flow profile entering the meter has a uniform distribution and is without jetting or swirl. Since the turbine meter construction is designed to direct the flow to the annular passage upstream of the rotor, it effectively tends to average the velocity profile of most normal flow conditions, thus minimizing the influence of minor flow distortions on meter performance. Straightening vanes are recommended; however, regardless of location they will not eliminate the effect of strong jetting. Integral straightening vanes installed in the entrance to a meter and a part of the meter design will eliminate minor swirl conditions. Straightening vanes located in the upstream meter piping in accordance with piping configurations (para. 4.2) will eliminate most normal flow swirl conditions.

The installation of a throttling device such as a regulator or partially closed valve is not recommended in close proximity to the meter. Where such installations are necessary, the throttling device should be placed an additional eight nominal pipe diameters upstream or an additional two nominal pipe diameters downstream of the installation configuration in Fig. 2, illustrated in para. 4.2. When used in the configurations illustrated in Figs. 3, 4, and 5, the additional pipe diameters should be added upstream or downstream of the vertical riser. Placement of such a device in closer proximity to the meter may result in accuracy degradation and/or reduced bearing life.

4.2 Installation Configurations

4.2.1 Recommended Installation for In-Line Meters. The recommended installation requires a length of 10 nominal pipe diameters upstream with straightening vane outlet located at 5 nominal pipe diameters from meter inlet as shown in Fig. 2. A length of 5 nominal pipe diameters is recommended downstream of the meter. Both inlet and outlet pipe should be of the same nominal size as the meter.

4.2.2 Optional Installations for In-Line Meters. The use of optional installations may result in some degradation in meter accuracy. The meter manufacturer should be consulted for performance accuracies that could be expected when using an optional installation configuration.

(*a*) *Short Coupled Installation.* In those instances where the required space for the recommended installation of Fig. 2 is not available, a short coupled installation may be employed. This configuration utilizes about 4 nominal pipe diameters upstream with straightening vanes located at the inlet of the piping. A typical installation is shown in Fig. 3. The distance between the straightening vane outlet and the meter inlet should

Copyright ASME International
Provided by IHS under license with ASME
No reproduction or networking permitted without license from IHS
Not for Resale

be a minimum of 2 nominal pipe diameters. The meter should be mounted between vertical risers using a standard tee or elbow with the block valves, filters, or strainers mounted on the risers. The maximum pipe reduction to the risers is 1 nominal pipe size.

(*b*) *Close Coupled Installation.* Close coupled installation of a gas turbine meter is shown in Fig. 4. The meter design must incorporate integral straightening vanes upstream of the rotor. This installation would be used where the available space for a meter installation is critical and design considerations have eliminated jetting and abnormal swirl conditions. The meter is connected to the vertical risers using a standard tee or elbow. The maximum pipe reduction to the risers is 1 nominal pipe size. Valving, filters, or strainers may be installed on the risers.

4.2.3 Recommended Installation for Angle Body Meters. Recommended installation for angle body meter is shown in Fig. 5. A 90 deg. turn into the meter run is recommended as illustrated. Ten nominal pipe diameters upstream from the meter are required if straightening vanes are not used. With the use of straightening vanes, the length of upstream pipe may be reduced to 5 nominal pipe diameters. When straightening vanes are used, they should be placed at the inlet end of the upstream pipe. There is no restriction on the downstream piping except that the companion flange attached to the meter outlet must be full size.

Vertical installation may be used where desired, but the same basic piping configuration as used in the horizontal set is required.

4.3 Straightening Vanes or Tubes

The straightening vanes or tubes should be constructed in accordance with the recommendation given by Fig. A-3 of ANSI Z11.299-1971, American National Standard for Measurement of Liquid Hydrocarbons by Turbine Meter System.

4.4 Filters or Strainers

Foreign substances in a pipeline will cause serious damage to turbine meters. In order to provide maximum protection, a filter or strainer with provisions for sensing differential pressure should be installed immediately upstream of the inlet piping.

Strainers can be used when fine dirt is not a problem and it is only necessary to protect the meter from large particles. Dry type filters or filter-separators should be used when fine dirt and/or liquid could be present.

TABLE 2 BLOWDOWN VALVE SIZING

Meter Size	Valve Size
2 in. (50 mm)	¼ in. (6 mm)
3 in. (80 mm)	½ in. (13 mm)
4 in. (100 mm)	½ in. (13 mm)
6 in. (150 mm)	1 in. (25 mm)
8 in. (200 mm)	1 in. (25 mm)
12 in. (300 mm)	1 in. (25 mm)

4.5 Overrange Protection

Sudden rotor overspeeding caused by extreme gas velocities encountered during pressuring, venting, or purging can cause severe damage. Some meters and readout devices may be damaged when they are run backwards. Therefore, the pressure blowdown valve should be located downstream of the meter.

While turbine meters can be operated up to 150% of rated capacity with no damaging effects for short periods of time, oversized blowdown valves can cause rotational speeds greatly in excess of this amount. Therefore, the blowdown valve should be sized as specified in Table 2. As a rule of thumb, the blowdown valve should not be larger than ⅙ of the meter size.

In those installations where adequate pressure is available, either a critical flow orifice or sonic venturi nozzle may be installed in the piping downstream of the meter and should be sized to limit the meter to approximately 120% of its rated capacity. A critical flow orifice so designed will result in a permanent 25% pressure loss and a sonic venturi nozzle will result in a permanent 5–10% pressure loss at 100% of the rated capacity of the meter.

4.6 Bypass

It is good practice to provide a bypass so the meter can be maintained and calibrated without a service interruption. This should include proper valving relative to the type of calibrating equipment to be used.

4.7 Additional Installation Requirements

The meter and meter piping should be installed so as to

(*a*) reduce strain due to pipeline stresses;

(*b*) obtain a concentric alignment of the pipe flange with the meter inlet and outlet connections; and

(*c*) prevent gasket protrusion into the bore or flow pattern at the meter connections.

Copyright ASME International
Provided by IHS under license with ASME
No reproduction or networking permitted without license from IHS

Not for Resale

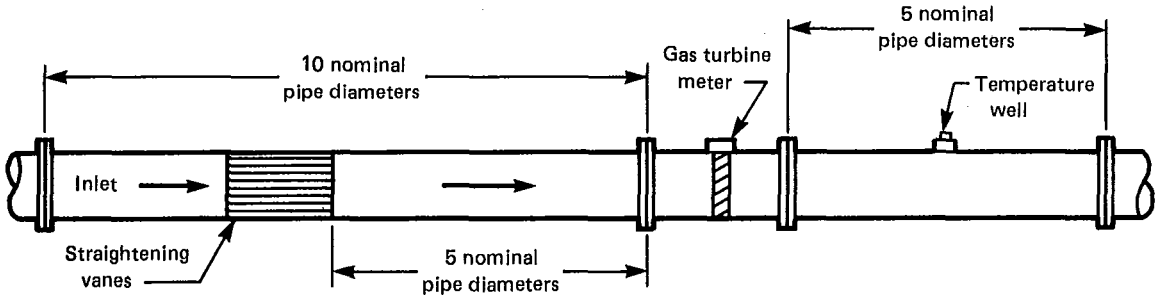

FIG. 2 RECOMMENDED INSTALLATION OF AN IN-LINE GAS TURBINE METER (MINIMUM LENGTHS)

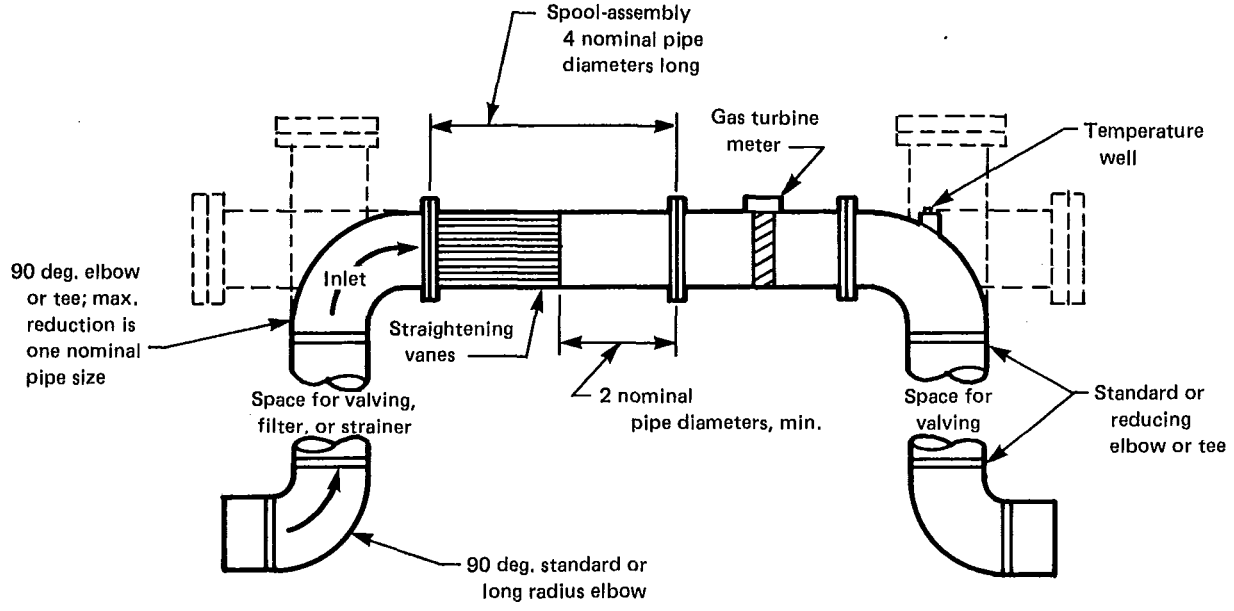

FIG. 3 SHORT COUPLED INSTALLATION OF AN IN-LINE GAS TURBINE METER (MINIMUM LENGTHS)

Copyright ASME International
Provided by IHS under license with ASME
No reproduction or networking permitted without license from IHS
Not for Resale

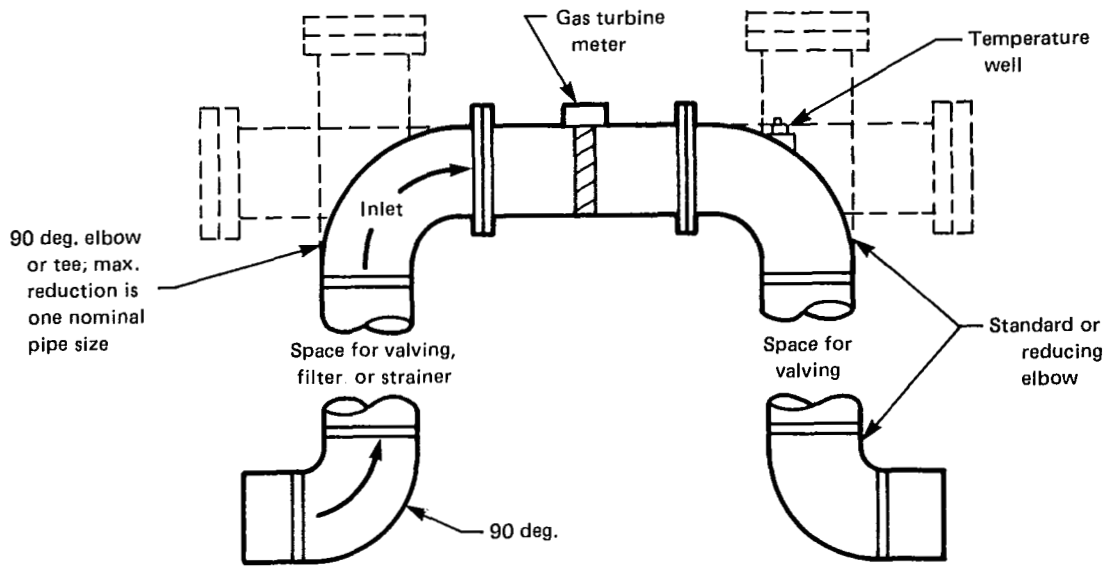

FIG. 4 CLOSE COUPLED INSTALLATION OF AN IN-LINE GAS TURBINE METER WITH INTEGRAL STRAIGHTENING VANES

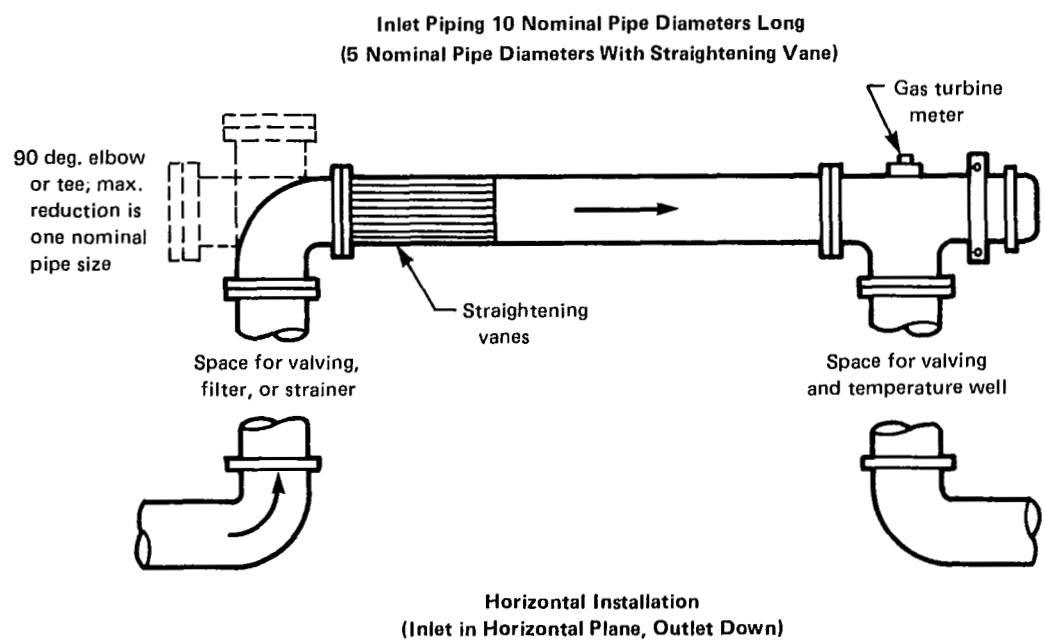

FIG. 5 RECOMMENDED INSTALLATION OF AN ANGLE BODY GAS TURBINE METER (MINIMUM LENGTHS)

Copyright ASME International
Provided by IHS under license with ASME
No reproduction or networking permitted without license from IHS

Not for Resale

The pipe interior should be of commercial roughness, and the flange I.D. should be the same I.D. as the pipe. Welds on piping at the meter inlet and outlet should be ground to the I.D. of the pipe.

Installations where liquid can be encountered should be designed to prevent liquid accumulation in the meter.

No welding should be done in the immediate area of the meter to prevent possible damage to the meter internals.

4.8 Accessories Installation

Accessory devices used for integrating uncorrected volume to base conditions or for recording operating parameters must be properly installed and the connections made as specified herein.

4.8.1 Temperature Measurement. Since upstream disturbances should be kept to a minimum, the recommended location for a thermometer well is downstream of the meter. It should be located from 1 to 5 pipe diameters from the meter outlet and upstream of any outlet valve or flow restrictions. The thermometer well should be installed to insure that the temperature measured is the stream temperature and is not influenced by heat transfer from the piping and well attachment.

4.8.2 Pressure Measurement. A pressure tap as provided and identified by the manufacturer on the meter body should be used as the point of pressure sensing for recording or integrating instruments.

4.8.3 Density Measurement. When densitometers are used, although it is desirable to sample the gas as close as possible to the rotor conditions, care must be exercised not to disturb the meter inlet flow or the pressure sensing line, or to create an unmetered bypass. References should be made to manuals on the various densitometers for further information.

4.8.4 Accessory Instruments. Any accessory driven by the meter should have a low friction torque requirement. Meters can drive high torque loads, but these loads may degrade meter accuracy at low flows and accelerate gear train wear.

5 OPERATION

5.1 General

Turbine meters should be operated within the specified flow range and operating conditions to produce the desired accuracy and secure normal life. They are subject to premature wear and damage by excessive rotor overspeeding and pipeline debris. Key considerations in operation are proper meter sizing for the intended flow, proper installation, and proper operation and maintenance procedures.

5.2 Prevention of Meter Overloading

Most turbine meters are capable of operating at modest overloads (approximately 20%) for short periods of time without loss in accuracy. Continual overloading will lead to premature bearing failure and must be avoided by proper meter sizing.

Meters on loads where the flow may significantly exceed rating for short periods can be protected by placing a restricting orifice or venturi downstream of the meter. (Refer to para. 4.5.) It should be noted that these restrictions will cause a considerable loss in line pressure.

5.3 Caution Against Quick Opening Valves

As with all meters, turbine meters should be pressured and placed in service slowly. Shock loading by opening valves quickly will usually result in rotor damage. The installation of a small bypass line around the upstream meter isolating valve can be utilized to safely pressure the meter to its operating pressure.

5.4 Start-Up Recommendation for New Lines

Before placing a new meter installation in service, particularly on new lines, the line should be blown to remove any collection of welding beads, rust accumulation, and other pipeline debris. The meter mechanism must be removed during all hydrostatic testing and such line blowing operations to prevent serious damage to the meter measuring element.

Filters or strainers can be used to remove any remaining foreign material during normal operation. (Refer to para. 4.4.)

5.5 Maintenance and Inspection Frequency

In addition to sound design and installation procedures, turbine meter accuracy is dependent on good maintenance practice and an adequate frequency of inspection. Basically, the time between meter inspection periods is dependent on the gas condition and the contract specifications. Meters used in dirty gas applications will require more frequent attention than those used with clean gas, and inspection periods should reflect this aspect. When strainers or filters are installed, scheduled visual inspections should be made as required and the pressure differential across the strainer or filter should be checked.

Copyright ASME International
Provided by IHS under license with ASME
No reproduction or networking permitted without license from IHS

Not for Resale

6 PERFORMANCE CHARACTERISTICS

6.1 Repeatability

The repeatability of a meter is the ability of the meter to duplicate a given output or performance for test runs with an identical set of input conditions. There are two types of repeatability: (1) repeatability on successive identical test runs, and (2) repeatability over a longer time basis such as daily, monthly, or yearly (also under identical operating conditions).

Disregarding random errors due to the proving system employed, most gas turbine meters under normal conditions are capable of ±0.10% repeatability or better at 95% confidence level for successive calibration test points and ±0.15% or better on a day-to-day basis. Good repeatability over longer periods depends on possible changes in the physical conditions of the meter. Measurement system control charts such as those shown in Fig. B-3 of ANSI Z11.299-1971 may be used for long-term repeatability analysis.

6.2 Accuracy

The accuracy of a meter is the degree of conformity of the indicated value of the meter to the true value of the measured quantity. The accuracy of a gas turbine meter as indicated by the meter readout device is generally specified as within ±1% of the true volume over a certain specified flow rate range and pressure range using air as calibration flow medium. The true volume generally refers to the test volume indicated by the prover used to calibrate the meter. For accuracy better than ±1%, manufacturers should be consulted for the specific application or meters should be calibrated, against an acceptable or approved secondary standard, under conditions near the meter's eventual operating condition.

6.3 Uncertainties in the Measurement of Flow Rate and Volume Throughput

Reference shall be made to ANSI/ASME MFC-2M-1983, Measurement Uncertainty for Fluid Flow in Closed Conduits, for determining measurement uncertainties for flow rate and volume throughput.

6.4 Pressure Loss

The pressure loss of a turbine meter is determined by the energy required for driving the meter, the losses due to the internal passage friction, and changes in flow velocity and direction. The pressure loss is usually measured at a point upstream and a point downstream of the meter on piping of the same size as the meter. These locations are specified by the manufacturer (usually one pipe diameter upstream and downstream). Care should be taken to choose points where flow pattern distortions do not affect the pressure readings.

The meter pressure loss ΔP_f for other conditions than that ΔP_r for rated conditions specified by manufacturer can be calculated, since the pressure loss basically follows the turbulent flow loss relationship (except at very low flow rate):

$$\Delta P_f \propto \rho_f Q_f^2$$

In terms of pressure loss at rated conditions and from the equation of state of a real gas, it follows that

$$\Delta P_f = \Delta P_r \frac{\rho_f}{\rho_r}\left(\frac{Q_f}{Q_r}\right)^2$$

$$= \Delta P_r \frac{G_f}{G_r}\frac{p_f}{p_r}\frac{T_r}{T_f}\frac{Z_r}{Z_f}\left(\frac{Q_f}{Q_r}\right)^2$$

6.5 Maximum Flow Rate

Gas turbine meters are generally designed for a maximum flow rate $Q_{r_{max}}$ (or maximum capacity rating) not to exceed a certain rotor speed and normal pressure loss. This maximum flow rate of the meter remains the same (unless stated otherwise) for all line pressures within the stated maximum operating pressure, i.e.,

$$Q_{f_{max}} = Q_{r_{max}}$$

The corresponding maximum base flow rate $Q_{b_{max}}$ can be expressed as

$$Q_{b_{max}} = Q_{r_{max}} \frac{\rho_f}{\rho_b}$$

$$= Q_{r_{max}} \frac{p_f}{p_b}\frac{T_b}{T_f}\frac{Z_b}{Z_f}$$

6.6 Minimum Flow Rate

The minimum flow rate (or minimum capacity rating) for a turbine meter is the lowest flow rate at which the meter will operate within some specified accuracy limits. Obviously, the minimum flow rate depends on the accuracy limits chosen. Usually, this accuracy limit is

Copyright ASME International
Provided by IHS under license with ASME
No reproduction or networking permitted without license from IHS
Not for Resale

set at $\pm 1\%$. Generally, the minimum flow rate depends on the magnitude of the nonfluid drag and the density of the measured gas. For a given meter, the meter will achieve the required accuracy at a lower line flow rate (thus a lower value of minimum line flow rate) as the gas density increases. The minimum line flow rate may be approximated as inversely proportional to the square root of the gas density through the meter, i.e.,

$$Q_{f\min} \propto \frac{1}{\sqrt{\rho_f}}$$

In terms of rated conditions of minimum flow rate, pressure, temperature, and fluid composition as specified by manufacturer, the minimum line flow rate may be approximated by

$$Q_{f\min} \simeq Q_{r\min} \sqrt{\frac{\rho_r}{\rho_f}}$$

$$\simeq Q_{r\min} \sqrt{\frac{G_r}{G_f} \frac{p_r}{p_f} \frac{T_f}{T_r} \frac{Z_f}{Z_r}}$$

and the corresponding minimum base flow rate by

$$Q_{b\min} \simeq Q_{r\min} \left(\sqrt{\frac{\rho_r}{\rho_f}} \right) \frac{\rho_f}{\rho_b}$$

$$\simeq Q_{r\min} \sqrt{\frac{G_r}{G_f} \frac{p_f}{p_b} \frac{p_r}{p_b} \frac{T_b}{T_f} \frac{T_b}{T_r} \frac{Z_b}{Z_f} \frac{Z_b}{Z_r}}$$

Generally, the rated temperatures and pressures are close to the base temperatures and pressures. In this case,

$$Q_{b\min} \simeq Q_{r\min} \sqrt{\frac{G_r}{G_f} \frac{p_f}{p_r} \frac{T_r}{T_f} \frac{Z_r}{Z_f}}$$

6.7 Rangeability

The rangeability of a meter is the ratio of the maximum flow rate to the minimum flow rate of a meter operating within specified accuracy limits and operating conditions of pressure and temperature. For a gas turbine meter, the rangeability increases essentially with the square root of gas density. This is because the minimum line flow rate decreases essentially as the square root of gas density increases, while the maximum line flow rate is independent of gas density and remains fixed by other design considerations as stated above. Therefore,

$$\text{Rangeability} = \frac{Q_{f\max}}{Q_{f\min}} = \frac{Q_{b\max}}{Q_{b\min}}$$

$$\simeq \frac{Q_{r\max}}{Q_{r\min}} \sqrt{\frac{G_f}{G_r} \frac{p_f}{p_r} \frac{T_r}{T_f} \frac{Z_r}{Z_f}}$$

The rangeability of a gas turbine meter for accurate flow measurement increases approximately as the square root of the static absolute pressure ratio p_f/p_r.

6.8 Swirl Effect

The gas turbine meter is designed for, and calibrated under, a condition which approaches purely axial flow at the rotor inlet. If the fluid at the rotor inlet has significant swirl (mainly tangential components), the rotor speed at a given flow rate will be different from that for purely axial flow. A swirl in the direction of rotor rotation will increase the rotor speed, whereas a swirl in the opposite direction will decrease the rotor speed. For high accuracy flow measurement, such a swirl effect must be reduced to an insignificant level through proper installation practices as described previously.

6.9 Velocity Profile Effect

Meter designs and piping installation configurations considered in this report attempt to condition the flow to achieve a symmetric, uniform velocity distribution at the rotor inlet. In those cases where there is a distortion of the velocity profile at the rotor inlet, the rotor speed at a given flow rate will be affected. For a given average flow rate, generally a nonuniform velocity profile results in a higher rotor speed than a uniform velocity profile.

6.10 Fluid Drag or Reynolds Number Effect

Fluid retarding torques on the rotor system (e.g., fluid drag on the rotor blades, blade tips, and rotor hub) cause the rotor to slip from its ideal speed. The amount of this fractional rotor slip due to the overall fluid drag is approximately equal to the ratio of the overall fluid drag actually exerted on the rotor system to the maximum available driving torque which the given rotor can possibly possess under the existing flow rate and gas density (fluid driving torque if rotor were stalled). It is

Copyright ASME International
Provided by IHS under license with ASME
No reproduction or networking permitted without license from IHS

Not for Resale

predominantly a function of Reynolds number of flow through the meter, and therefore is frequently called the *Reynolds number effect.*

6.11 Nonfluid Drag or Density Effect

Nonfluid retarding torques on the rotor system (e.g., bearing friction, mechanical readout drag, electrical readout drag) also cause the rotor to slip from its ideal speed. The amount of this fractional rotor slip due to the overall nonfluid drag is approximately equal to the ratio of the overall nonfluid drag to the maximum available driving torque which the given rotor can possibly possess under the existing flow rate and gas density. For a given overall nonfluid drag, the fractional rotor slip is inversely proportional to the product of the first power of gas density (or line pressure) and the second power of line flow rate and, therefore, is not a unique function of Reynolds number. When plotting against Reynolds number, the fractional rotor slip due to nonfluid drag will be a family of curves depending upon the value of gas density (or line pressure) and is directly proportional to the gas density (or line pressure) and inversely proportional to the square of the Reynolds number.

For a given gas turbine meter measuring a given line flow rate, the fractional rotor slip due to nonfluid drag depends only on the density of the gas being measured. Therefore, this nonfluid drag effect is also called *density effect.* However, for a gas turbine meter, this effect is usually significant only at very low line flow rates. The higher the gas density or line pressure, the lower these flow rates.

6.12 Gas Turbine Meter Accuracy Curve

For a gas turbine meter with proper installation, the meter accuracy curve is determined by unity (corresponding to ideal rotor speed) less fractional rotor slip due to overall fluid drag and fractional rotor slip due to overall nonfluid drag. When plotting against line flow rate, the meter accuracy curves for various line pressures would be generally a family of distinct curves. When plotting against Reynolds number or base flow rate (which is practically proportional to the Reynolds number for a given meter), the meter accuracy curves for various line pressures tend to approach a single characteristic curve determined by the Reynolds number effect of the meter, except at low line flow rates where the curves branch off individually (depending upon line pressure), downward from the characteristic curve determined by the individual nonfluid or density effect of the meter. However, within the operating range of flow rates and line pressures of the meter where the nonfluid drag effect is insignificant, the meter accuracy curves for various line flow rates and line pressures approach a single characteristic curve in terms of Reynolds number predominantly determined by the Reynolds number effect on the meter. Fig. 6 shows an example of such a curve for a high pressure gas turbine meter, plotted against Reynolds number (linear scale) at various line pressures.

6.13 Pulsation Effect

In a number of measurement applications (e.g., compressor stations), the flow may be pulsating instead of steady. Where possible, this can be rectified by placing the meter further from the pulsation source or by adding a pulsation dampener. Thus it may be important to know whether the magnitude of the error due to pulsating flow conditions is significant. The solution of the problem is complex, but the error is usually positive since the rotor responds better at high flow than at low flow (i.e., the rotor overruns more during the low velocity portion of the flow cycle than it underruns during the high velocity portion). Major factors affecting the meter error due to pulsation flow are the amplitude, frequency, and wave shape of the pulsating flow and the rotor response time (which includes rotor inertia and mass flow rate). It is important to note that the pulsation error depends on the variation in flow velocity and not on the variation in line pressure (which may or may not be related). Of practical use in determining whether the pulsation error is significant, is the pulsation threshold. A peak-to-peak flow variation of 10% of the average flow will generally result in a meter pulsation error of less than 0.25% and can be considered as a pulsation threshold.

6.14 Temperature and Pressure Effects on Change of Meter Dimensions

When the operating temperature and pressure are much different from those at meter calibration conditions, the temperature and pressure effects on change of meter dimensions should be checked by the method described in Appendix E of ANSI Z11.299-1971.

7 DATA COMPUTATION AND PRESENTATION

7.1 Calculation Equations for Volumetric Flow

The turbine meter is a velocity measuring device. The turbine meter rotor speed is proportional to the gas velocity, and since the effective flow area is defined, the rotor revolution is proportional to the gas volume pass-

Copyright ASME International
Provided by IHS under license with ASME
No reproduction or networking permitted without license from IHS
Not for Resale

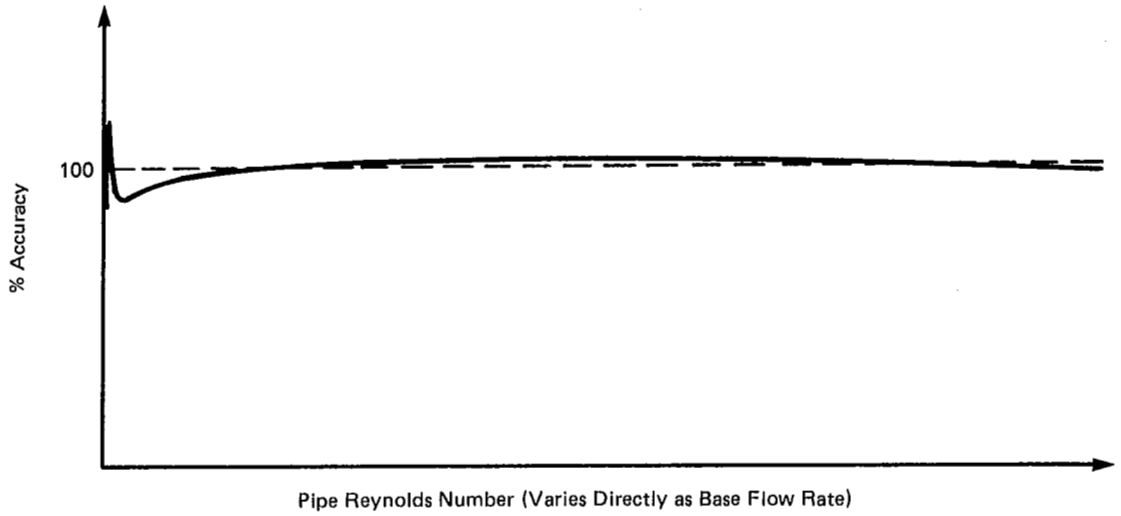

FIG. 6 ACCURACY CURVE OF A HIGH PRESSURE GAS TURBINE METER PLOTTED AGAINST REYNOLDS NUMBER (LINEAR SCALE) AT VARIOUS LINE PRESSURES WHERE ROTOR SLIP DUE TO NONFLUID DRAG IS INSIGNIFICANT

ing through the meter at line conditions. The usual gas industry practice is to relate volumes to a base condition for billing and transfer accounting. The following are calculation equations to convert the gas volume at line conditions as registered by the gas turbine meter to gas volume at specified base conditions (base pressure and base temperature). Flow rate may be determined by timing meter output over a specific volume and reducing this line flow rate to flow rate at base conditions by the same calculations.

Since the turbine meter measures volumes at line or flowing conditions, the equation of state of real gases may be applied to change the register volume to base volume.

$$p_f V_f = Z_f N R T_f \qquad \text{(for flowing conditions)}$$

and

$$p_b V_b = Z_b N R T_b \qquad \text{(for base conditions)}$$

where

p = absolute pressure
V = volume
Z = compressibility factor
N = number of moles of gas
T = absolute temperature
R = universal gas constant
f = subscript for flowing conditions
b = subscript for base conditions

Since R is a constant for the gas regardless of pressure and temperature, and for the same number of moles of gas N, the two equations can be combined to yield

$$V_b = V_f \frac{p_f}{p_b} \frac{T_b}{T_f} \frac{Z_b}{Z_f}$$

The above equation can be calculated for the specific conditions at the meter, or tables can be employed.

The following is an expansion of the above equation that includes factors to calculate V_b for any pressure or temperature base other than 14.73 psia (101.56 kPa) and 60°F (15.56°C). The equation is in a form similar to that used in orifice metering, and certain factors are the same:

$$V_b = V_f F_{pf} F_{pb} F_{tf} F_{tb} s$$

7.2 Flowing Pressure Factor F_{pf}

Flowing pressure factor F_{pf} is defined as the ratio of static absolute pressure in psia at flowing condition to a pressure base of 14.73 psig (101.56 kPa), or

$$F_{pf} = \frac{p_f}{14.73}$$

and

$$p_f = P_f + p_a$$

Copyright ASME International
Provided by IHS under license with ASME
No reproduction or networking permitted without license from IHS
Not for Resale

ASME MFC-4M 86 0759670 0049460 0

where

p_f = static absolute pressure in psia at flowing condition
P_f = static gage pressure in psig at flowing condition
p_a = atmospheric pressure in psia

7.3 Pressure Base Factor F_{pb}

Pressure base factor F_{pb} is defined as the ratio of the pressure base of 14.73 psia (101.56 kPa) to the actual contract base pressure p_b in psia, or

$$F_{pb} = \frac{14.73}{p_b}$$

This factor is used to change the base pressure from 14.73 psia (101.56 kPa) to an actual contract pressure base p_b in psia.

7.4 Flowing Temperature Factor F_{tf}

Flowing temperature factor F_{tf} is defined as the ratio of the temperature base of 60°F (15.56°C) or 519.67°R (288.71 K) to the actual flowing temperature of the gas T_f in degrees Rankine, or

$$F_{tf} = \frac{519.67}{T_f}$$

7.5 Temperature Base Factor F_{tb}

Temperature base factor F_{tb} is defined as the ratio of the actual contract base temperature T_b in degrees Rankine to the assumed temperature base of 519.67°R (288.71 K), or

$$F_{tb} = \frac{T_b}{519.67}$$

This factor is used to change from the assumed temperature base of 60°F (15.56°C) to the actual contract base temperature.

7.6 Compressibility Ratio s

The compressibility ratio s is defined as

$$s = \frac{Z_b}{Z_f}$$

where

Z_b = compressibility factor at base conditions
Z_f = compressibility factor at flowing conditions

For natural gas, the compressibility ratio s can be evaluated from the supercompressibility factor F_{pv}, which is defined as

$$s = (F_{pv})^2$$

The numerical values of the supercompressibility factor F_{pv} given in AGA Report NX-19 or ANSI/API 2530 (1978) are not exactly equal to $F_{pv} = \sqrt{s} = \sqrt{Z_b/Z_f}$ as defined above. F_{pv} given by AGA Report NX-19 is made equal to unity at a pressure of 14.7 psia (101.35 kPa) and at all temperatures, whereas F_{pv} defined by $F_{pv} = \sqrt{Z_b/Z_f}$ can have the value of unity at only one temperature for a given pressure. The discrepancy between $(F_{pv})^2$ given by AGA Report NX-19, Manual for the Determination of Supercompressibility Factors for Natural Gas (1962), and $(F_{pv})^2 = s = Z_b/Z_f$, depends upon the flowing temperature, the base temperature and base pressure, and the composition of gas. However, this discrepancy is generally small (e.g., within ±0.1% for a 0.6 sp gr hydrocarbon gas with base conditions of 14.73 psia, 60°F, and flowing temperature between 0°F and 140°F).

For gases other than natural gas, the values of the compressibility ratio $s = (Z_b/Z_f)$ at various pressures and temperatures can be determined from published tables of their thermodynamic and transport properties. For example, Tables of Thermodynamic and Transport Properties of Air, Argon, Carbon Dioxide, Carbon Monoxide, Hydrogen, Nitrogen, Oxygen and Steam (by J. Helsenrath, H. Hoge, et al., Pergamon Press, 1960) can be used to determine the values of s for air and the seven other gases listed.

7.7 Calculation Equations for Mass Flow

Mass flow measurement is determined by computing the product of the flowing volume V_f registered by the turbine meter and the gas density ρ_f at flowing conditions:

$$M = V_f \rho_f$$

where M is the total mass through the meter.
The gas density ρ_f at flowing conditions may be determined by an on-line densitometer. The densitometer needs to determine the gas density at the pressure tap location of the turbine meter.

Since the mass at flowing conditions equals the mass at base conditions, it can be stated that

$$V_b \rho_b = V_f \rho_f = M$$

Copyright ASME International
Provided by IHS under license with ASME
No reproduction or networking permitted without license from IHS

Not for Resale

or

$$V_b = V_f \frac{\rho_f}{\rho_b} = M/\rho_b$$

The above equation shows that the base volume V_b can be determined by knowing the gas density at both flowing and base conditions. The gas density at base conditions can be calculated from the density of dry air at base conditions and the specific gravity G of the gas, i.e.,

$$\rho_b = \rho_{b\,\text{air}}\, G$$

The specific gravity G of the gas can be determined by a gravitometer.

For pure gases or known gas mixtures, the specific gravity G can be calculated from their molecular weights and composition with proper correction for difference in compressibility factor Z between gas and air. The ratio of the molecular weight of gas to the molecular weight of dry air gives the ideal specific gravity G_i which, in turn, gives the (real) specific gravity G when multiplied by the correction factor $(Z_{b\,\text{air}}/Z_{b\,\text{gas}})$, or

$$G = G_i \frac{Z_{b\,\text{air}}}{Z_{b\,\text{gas}}}$$

$$= \left(\frac{\text{molecular weight of gas}}{\text{molecular weight of air}}\right) \frac{Z_{b\,\text{air}}}{Z_{b\,\text{gas}}}$$

where Z_b is the compressibility factor at base conditions.

The molecular weight of a gas mixture is determined by computing the sum of the products of the molecular weights of the components and their known mole fractions:

$$\text{molecular weight} = X_a A + X_b B + \ldots$$

where

$X_a, X_b, \ldots$ = mole fractions of various components of the gas mixture

$A, B, \ldots$ = molecular weights of the component gases

7.8 Determination of Calibration Factor

It is a general practice and most convenient to use a fixed meter calibration factor over the whole range of flow rates. This will be a calibration factor K (pulses per unit volume) for an electrical output. For mechanical output meters, the factor is set by choosing "change gears" that make each meter output shaft revolution represent a definite volume, e.g., 10,000 or 1000 cu ft (100 or 10 m^3) at flowing conditions.

Most manufacturers of gas turbine meters perform routine factory calibrations to determine the calibration factor for each meter using air at pressures below 100 psig (690 kPa gage). These are also the conditions during many field calibrations. Arrangements can be made for factory calibration at higher pressures. Field tests can also be made at higher pressures by using sonic nozzles or calibrated transfer meters.

Turbine meter manufacturers normally will guarantee an accuracy of $\pm 1\%$ at any operating pressure. Turbine meters are capable of $\pm 0.25\%$ accuracy for operation at a particular pressure, if they are individually calibrated against an acceptable high pressure standard. Therefore, the most accurate turbine meter calibrations are obtained when each meter is calibrated under pressure conditions near the meter's eventual operating pressure in the actual application.

If high pressure calibrations are impractical, it is necessary to rely on the manufacturer's prediction of the calibration shift to be expected between the calibrating and operating conditions. Such predictions can usually be relied on to about $\pm 1\%$.

7.9 Presentation of Calibration Data

For near constant line pressure operation, plotting the meter accuracy curve as a function of the line flow rate for the calibration pressure at or near the operating pressure is preferred for maximum accuracy. However, for situations where the operating pressure and operating flow rate may vary considerably, it may be preferred to plot the calibrated meter accuracy curve as a function of base flow rate or Reynolds number (either blade chord or pipe diameter). The meter accuracy at any particular combination of operating pressures and operating flow rates may then be more precisely determined from the calibrated accuracy curve at its equivalent base flow rate or Reynolds number than from the calibration curve plotted in terms of line flow rate for a single or a few calibration line pressures.

8 CALIBRATION METHODS

8.1 General

The term *calibration methods* as used here encompasses those procedures that are used for initial calibration by the manufacturer, for checking the accuracy of the turbine meter by the user, and for recalibrating the meter if major repairs are necessary. The techniques are applied to field, shop, or laboratory installations. The

Copyright ASME International
Provided by IHS under license with ASME
No reproduction or networking permitted without license from IHS

Not for Resale

major difference is the fluid used for testing — air or line gas. The procedures and techniques are recognized methods that have been in use for many years. This discussion will identify precautions of particular interest. However, reference should be made to instruction manuals and reports covering the particular device used to perform the calibration.

8.2 Bell Prover

The bell prover is widely used as a primary standard and, when properly instrumented, can be one of the most accurate and repeatable of all low pressure standards. (Reference ANSI B109.2, 6.5.5.)

Meters tested against a bell prover are usually operated near the bell pressure (a few inches of water); however, it is possible to test the meter at several times the atmospheric pressure. This is accomplished by expanding the gas from the meter, through a throttling valve, to the bell pressure before entering the bell.

8.3 Transfer Prover

The principle of transfer proving consists of testing a meter against a master or reference meter of known accuracy. AGA Report No. 6, Part III, 1975, describes the general technique of transfer proving.

Although direct calibration of a turbine meter against a bell prover is limited, as mentioned in para. 8.2, it is still possible to develop a turbine meter as an accurate high pressure reference meter traceable to the bell prover. To accomplish this, the accuracy curve of a large turbine meter can be established using two or more smaller turbine meters which have been calibrated against a bell prover. A series of alternating transfer proving tests between the larger and smaller meters, in a high pressure flow facility, can be conducted to gradually extend the calibration of the meters, based on Reynolds number concept, to higher pressures and those flow rates where the nonfluid drag effect is insignificant.

8.4 Critical Flow Orifice Prover and Sonic Nozzle Prover

Critical flow orifice provers and sonic nozzle provers are devices that operate with a pressure drop above a specified (critical) pressure ratio. The critical flow orifice prover requires that the exit pressure be less than 50% of the inlet pressure and the gas or air vented to atmosphere. AGA Report No. 6, Part IV, 1975, provides a description of the critical flow orifice and methods for performing a general field calibration.

The major difference between the critical flow orifice and the sonic nozzle is that the sonic nozzle will operate correctly at a lower overall pressure drop. The discharge section of the sonic nozzle is designed similar to a venturi where a large part of the pressure loss is recovered. To operate correctly, the discharge pressure must be less than 85% of the inlet pressure. With this minimal pressure drop, the gas discharge can be placed into a lower pressure system eliminating the need to discharge to atmosphere. Proving methods and calculation descriptions are given in American Meter Bulletin AIM-211.1, Sonic Flow Nozzle Prover.

Both the critical flow orifice and the sonic nozzle are capable of calibrating a meter at operating conditions with an accuracy as high as $\pm 0.25\%$ of actual flow rate. To obtain this high degree of accuracy requires accurate determination of the basic orifice or nozzle coefficient, upstream pressure, temperature, and gas composition.

These provers are fixed flow devices. This means that a nozzle or an orifice of a given throat (bore) diameter will give only one volumetric flow rate. To achieve a proof curve over the operating range of the turbine flowmeter, several nozzles or orifices of different throat size must be used.

8.5 In-Line Orifice Meter

Differential pressure meters using thin-plate squared-edged orifices are frequently utilized by the gas industry for checking turbine meters. Tables of factors and calculation methods are given in AGA Report No. 3. For a high level of accuracy, it is preferable that the basic orifice and Reynolds number factors for each plate be established by actual calibration. Orifice meters are inferential devices and require knowledge of the gas specific gravity if used for testing in natural gas. The control and accurate measurement of temperature, pressure, and differential pressure are very important if accurate results are to be obtained.

9 FIELD CHECKS

9.1 General

The most commonly applied field checks are visual inspection and spin time test. Meters in operation can often yield information by observing their generated sounds or vibrations. Severe meter vibrations usually indicate damage and subsequent unbalance of the rotor which will ultimately lead to complete rotor failure. Rotor rubbing and damaged bearings can often be heard at relatively low flow rates where such noises are not masked by normal flow noise.

Copyright ASME International
Provided by IHS under license with ASME
No reproduction or networking permitted without license from IHS

Not for Resale

ASME MFC-4M 86 0759670 0049463 6

9.2 Visual Inspection

During visual inspection, the rotor should be inspected for missing blades, an accumulation of solids, erosion, or other damage that would affect the rotor balance and blade configuration. Meter internals should also be checked to insure there is no accumulation of debris. Flow passageways, drains, breather holes, and lubrication systems should also be checked to insure there are no accumulations of debris.

9.3 Spin Time Test

The spin time test determines the relative level of mechanical friction present in the meter. If the mechanical friction has not significantly changed, the meter area remains clean, and the internal portions of the meter show no damage, the meter should display no change in accuracy. If the mechanical friction has increased significantly, this indicates that the accuracy characteristic of the meter at low flow rates has degraded. Spin times for individual meters are provided by the manufacturer.

The spin time test must be conducted in a draft-free area with the measuring mechanism in its normal operating position. The rotor is set into rotation and is timed from the initial motion until the rotor stops. Spin time tests should be repeated at least three times and the mean average time taken.

The usual cause for a change in spin time is increased rotor shaft bearing friction. It should be noted, however, that there are other points where mechanical friction affects spin time. The spin times at various stages of disassembly will help to identify the problem area.

Additional conditions which affect the spin time are heavily lubricated bearings, low ambient temperature, drafts, and attached accessories.

Copyright ASME International
Provided by IHS under license with ASME
No reproduction or networking permitted without license from IHS

Not for Resale