ASME MFC-3M–2004
[Revision of ASME MFC-3M–1989 (R1995)]

Measurement of Fluid Flow in Pipes Using Orifice, Nozzle, and Venturi

AN AMERICAN NATIONAL STANDARD



The American Society of Mechanical Engineers

Copyright ASME International
Provided by IHS under license with ASME
No reproduction or networking permitted without license from IHS

Not for Resale

ASME MFC-3M–2004

[Revision of ASME MFC-3M–1989 (R1995)]

Measurement of Fluid Flow in Pipes Using Orifice, Nozzle, and Venturi

AN AMERICAN NATIONAL STANDARD



The American Society of Mechanical Engineers

Three Park Avenue • New York, NY 10016

Copyright ASME International
Provided by IHS under license with ASME
No reproduction or networking permitted without license from IHS

Not for Resale

Date of Issuance: August 15, 2005

The 2004 edition of this Standard is being issued with an automatic addenda subscription service. The use of addenda allows revisions made in response to public review comments or committee actions to be published as necessary. This Standard will be revised when the Society approves the issuance of a new edition.

ASME issues written replies to inquiries concerning interpretations of technical aspects of this Standard. Interpretations are published on the ASME Web site under the Committee Pages at http://www.asme.org/codes/ as they are issued.

ASME is the registered trademark of The American Society of Mechanical Engineers.

This code or standard was developed under procedures accredited as meeting the criteria for American National Standards. The Standards Committee that approved the code or standard was balanced to assure that individuals from competent and concerned interests have had an opportunity to participate. The proposed code or standard was made available for public review and comment that provides an opportunity for additional public input from industry, academia, regulatory agencies, and the public-at-large.

ASME does not "approve," "rate," or "endorse" any item, construction, proprietary device, or activity.

ASME does not take any position with respect to the validity of any patent rights asserted in connection with any items mentioned in this document, and does not undertake to insure anyone utilizing a standard against liability for infringement of any applicable letters patent, nor assumes any such liability. Users of a code or standard are expressly advised that determination of the validity of any such patent rights, and the risk of infringement of such rights, is entirely their own responsibility.

Participation by federal agency representative(s) or person(s) affiliated with industry is not to be interpreted as government or industry endorsement of this code or standard.

ASME accepts responsibility for only those interpretations of this document issued in accordance with the established ASME procedures and policies, which precludes the issuance of interpretations by individuals.

No part of this document may be reproduced in any form,
in an electronic retrieval system or otherwise,
without the prior written permission of the publisher.

The American Society of Mechanical Engineers
Three Park Avenue, New York, NY 10016-5990

Copyright © 2005 by
THE AMERICAN SOCIETY OF MECHANICAL ENGINEERS
All rights reserved
Printed in U.S.A.

--`,,```,,,,````-`-`,,`,,`,`,,`---

Copyright ASME International
Provided by IHS under license with ASME
No reproduction or networking permitted without license from IHS

Not for Resale

CONTENTS

Foreword v
Committee Roster vi
Correspondence With the MFC Committee vii

Part 1 General 1
1-1 Scope and Application 1
1-2 References and Related Documents 1
1-3 Symbols and Definitions 2
1-4 Principles of the Method of Measurement and Computation 5
1-5 General Requirements for Measurement 6
1-6 Installation Requirements 7
1-7 Uncertainties in the Measurement of Flow Rate 9

Figure
1-1 "Triple-T" Arrangement 6

Table
1-1 Symbols 3

Nonmandatory Appendices
1A Iterative Computations 11
1B Examples of Values of Pipe Wall Uniform Equivalent Roughness, k 12
1C Flow Conditioners and Flow Straighteners 13

Part 2 Orifice Plates 18
2-1 Scope and Field of Application 18
2-2 References and Related Documents 18
2-3 Principles of the Method of Measurement and Computation 19
2-4 Orifice Plates 19
2-5 Installation Requirements 26

Figures
2-1 Standard Orifice Plate 19
2-2 Orifice Plate Flatness Measurement 20
2-3 Spacing of Pressure Taps for Orifice Plates with D and $D/2$ Pressure Taps or Flange Taps 22
2-4 Corner Taps 23
2-5 Layout Including a Full Bore Valve for $\beta = 0.6$ 28
2-6 Examples of Acceptable Installations 30
2-7 19-Tube Bundle Flow Straightener 31
2-8 Examples of Installations With a 19-Tube Bundle Flow Straightener Downstream of a Single Bend 33
2-9 Zanker Flow Conditioner Plate 34

Tables
2-1 Maximum Value of $10^4 R_a/D$ 24
2-2 Minimum Value of $10^4 R_a/D$ (When Required) 24
2-3 Required Straight Lengths Between Orifice Plates and Fittings Without Flow Conditioners 27

Copyright ASME International
Provided by IHS under license with ASME
No reproduction or networking permitted without license from IHS
Not for Resale

2-4 Permitted Range of Straight Lengths Between Orifice Plate and 19-Tube Bundle Flow Straightener (1998) Downstream of Fittings Located at Distance, L_f, From the Orifice Plate 32

Nonmandatory Appendix
2A Tables of Discharge Coefficients and Expansibility Factors 37

Part 3 Nozzles and Venturi Nozzles 49
3-1 Scope and Field of Application 49
3-2 References and Related Documents 49
3-3 Principles of the Method of Measurement and Computation 49
3-4 Nozzles and Venturi Nozzles 50
3-5 Installation Requirements 59

Figures
3-1 ISA 1932 Nozzle 50
3-2 Long Radius Nozzles 54
3-3 Venturi Nozzle 56
3-4 Venturi Nozzle, Pressure Taps 58
3-5 Pressure Loss Across a Venturi Nozzle 59
3-6 Layout Including a Full Bore Valve for $\beta = 0.6$ 62
3-7 Examples of Acceptable Installations 63

Tables
3-1 Upper Limits of Relative Roughness of the Upstream Pipe for ISA 1932 Nozzles . . . 52
3-2 Upper Limits of Relative Roughness of the Upstream Pipe for Venturi Nozzles 58
3-3 Required Straight Lengths for Nozzles and Venturi Nozzles 60

Nonmandatory Appendix
3A Tables of Discharge Coefficients and Expansibility Factors 65

Part 4 Venturi Meters 68
4-1 Scope and Field of Application 68
4-2 References and Related Documents 68
4-3 Principles of the Method of Measurement and Computation 68
4-4 ASME Venturi Tubes 69
4-5 Installation Requirements 74

Figures
4-1 Geometric Profile of the ASME Venturi Tube 70
4-2 Pressure Loss Across an ASME Venturi Tube 74
4-3 Layout Including a Full Bore Valve for $\beta = 0.6$ 76
4-4 Examples of Acceptable Installations 77

Table
4-1 Required Straight Lengths for Classical Venturi Tubes 75

Nonmandatory Appendices
4A Tables of Expansibility Factors 79
4B ASME Venturi Meters Used Outside the Scope of MFC-3M–2004 80
4C Pressure Loss in ASME Venturi Meters 82

Copyright ASME International
Provided by IHS under license with ASME
No reproduction or networking permitted without license from IHS
Not for Resale

FOREWORD

The purpose of this Standard is to provide guidance and recommendations in the applications of fluid flow in pipes using orifice, nozzle, and venturi meters. This Standard was prepared by MFC Subcommittee 2 of the American Society of Mechanical Engineers Standards Committee on Measurement of Fluid Flow in Closed Conduits.

As of the publication of this Standard, differential producers are the single most-used method of full-pipe flow measurement in the United States and worldwide. By utilizing simple physical laws, differential-producing flow meters are capable of providing reliable flow measurement within established uncertainty bands.

The first edition of this Standard was approved by the ASME MFC Standards Committee in 1985. The MFC Standards Committee approved the second edition of this Standard in 1989, and reaffirmed it in 1995. This revision, approved by the MFC Standards Committee in 2004, includes extensive changes to content and format from the MFC-3M–1989 (R1995) edition.

Given the global nature of the flow measurement market, this Standard is as consistent and technically equivalent with ISO 5167 as practical. There are, however, technical and editorial differences made in consideration of recent technical insights and operational practices common in the United States.

This Standard provides information in both SI (metric) units and U.S. Customary units. For reference, U.S. Customary units are shown in parentheses.

Suggestions for improvement to this Standard are welcome. They should be sent to Secretary, ASME MFC Standards Committee, Three Park Avenue, New York, NY, 10016-5990.

This edition of the Standard was approved by the American National Standards Institute on April 30, 2004.

Copyright ASME International
Provided by IHS under license with ASME
No reproduction or networking permitted without license from IHS
Not for Resale

ASME MFC COMMITTEE
Measurement of Fluid Flow in Closed Conduits

(The following is the roster of the Committee at the time of approval of this Standard.)

OFFICERS

Z. D. Husain, *Chair*
R. J. DeBoom, *Vice Chair*
R. L. Crane, *Secretary*

COMMITTEE PERSONNEL

C. J. Blechinger, Consultant
R. W. Caron, Visteon Corp.
G. P. Corpron, Consultant
R. L. Crane, The American Society of Mechanical Engineers
R. J. DeBoom, Consultant
P. G. Espina, Controlotron Corp.
D. Faber, Badger Meter, Inc.
R. H. Fritz, Lonestar Measurement
F. D. Goodson, Emerson Process
Z. D. Husain, Chevron Texaco
E. H. Jones, Jr., *Alternate,* Chevron Petroleum Technologies
C. G. Langford, Cullen G. Langford, Inc.
W. M. Mattar, Invensys / Foxboro Co.
G. E. Mattingly, National Institute of Standards and Technology
D. R. Mesnard, FMC Measurement Solutions
R. W. Miller, R. W. Miller and Associates, Inc.
A. M. Quraishi, American Gas Association
B. K. Rao, Consultant
W. F. Seidl, Colorado Engineering Experiment Station, Inc.
T. M. Kegel, *Alternate,* Colorado Engineering Experiment Station, Inc.
D. W. Spitzer, Copperhill and Pointer, Inc.
R. N. Steven, McCrometer
D. H. Strobel, Consultant
J. H. Vignos, Consultant
D. E. Wiklund, Rosemount, Inc.
D. C. Wyatt, Wyatt Engineering and Design

SUBCOMMITTEE 3—PRESSURE DIFFERENTIAL DEVICES

D. C. Wyatt, *Chair,* Wyatt Engineering
R. L. Crane, *Secretary,* The American Society of Mechanical Engineers
R. M. Bough, Allison Engine Co.
R. H. Fritz, Lonestar Measurement
F. G. Goodson, Emerson Process
Z. D. Husain, Chevron Texaco
M. P. McHale, McHale and Associates Inc.
R. J. W. Peters, McCrometer
A. M. Quraishi, American Gas Association
W. F. Seidl, Colorado Engineering
D. W. Spitzer, Copperhill and Pointer, Inc.
R. N. Steven, McCrometer
J. W. Stuart, Stuart Gas Measurement Consulting
S. H. Taha, Experflow Measurement, Inc.
D. E. Wiklund, Rosemount, Inc.

Copyright ASME International
Provided by IHS under license with ASME
No reproduction or networking permitted without license from IHS
Not for Resale

CORRESPONDENCE WITH THE MFC COMMITTEE

General. ASME Standards are developed and maintained with the intent to represent the consensus of concerned interests. As such, users of this Standard may interact with the Committee by requesting interpretations, proposing revisions, and attending committee meetings. Correspondence should be addressed to:

Secretary, MFC Standards Committee
The American Society of Mechanical Engineers
Three Park Avenue
New York, NY 10016-5990

Proposing Revisions. Revisions are made periodically to the Standard to incorporate changes that appear necessary or desirable, as demonstrated by the experience gained from the application of the Standard. Approved revisions will be published periodically.

The Committee welcomes proposals for revisions to this Standard. Such proposals should be as specific as possible, citing the paragraph number(s), the proposed wording, and a detailed description of the reasons for the proposal, including any pertinent documentation.

Interpretations. Upon request, the MFC Committee will render an interpretation of any requirement of the Standard. Interpretations can only be rendered in response to a written request sent to the Secretary of the MFC Standards Committee.

The request for interpretation should be clear and unambiguous. It is further recommended that the inquirer submit his/her request in the following format:

Subject:	Cite the applicable paragraph number(s) and the topic of the inquiry.
Edition:	Cite the applicable edition of the Standard for which the interpretation is being requested.
Question:	Phrase the question as a request for an interpretation of a specific requirement suitable for general understanding and use, not as a request for an approval of a proprietary design or situation. The inquirer may also include any plans or drawings that are necessary to explain the question; however, they should not contain proprietary names or information.

Requests that are not in this format will be rewritten in this format by the Committee prior to being answered, which may inadvertently change the intent of the original request.

ASME procedures provide for reconsideration of any interpretation when or if additional information that might affect an interpretation is available. Further, persons aggrieved by an interpretation may appeal to the cognizant ASME Committee or Subcommittee. ASME does not "approve," "certify," "rate," or "endorse" any item, construction, proprietary device, or activity.

Attending Committee Meetings. The MFC Standards Committee regularly holds meetings, which are open to the public. Persons wishing to attend any meeting should contact the Secretary of the MFC Standards Committee.

Copyright ASME International
Provided by IHS under license with ASME
No reproduction or networking permitted without license from IHS
Not for Resale

--`,,```,,,,````-`-`,,`,,`,`,,`---

Copyright ASME International
Provided by IHS under license with ASME
No reproduction or networking permitted without license from IHS
Not for Resale

MEASUREMENT OF FLUID FLOW IN PIPES USING ORIFICE, NOZZLE, AND VENTURI

Part 1 General

1-1 SCOPE AND APPLICATION

This Standard specifies the geometry and method of use (installation and operating conditions) for pressure differential devices (including, but not limited to, orifice plates, flow nozzles, and venturi tubes) when installed in a closed conduit running full and used to determine the flow-rate of the fluid flowing in the conduit. This Standard applies to pressure differential devices in which the flow remains subsonic throughout the measuring section and where the fluid is considered as single-phase. The Standard is limited to single-phase Newtonian fluid flow in which the flow can be considered sufficiently free from pulsation effects. It gives information for calculating the flow-rate and the associated uncertainty when each of these devices is used within specified limits of pipe size and Reynolds number.

This Standard covers flow meters that operate on the principle of a local change in flow velocity and/or flow parameters caused by meter geometry, resulting in a corresponding change of pressure between two set locations. Although there are several types of differential pressure meters available, it is the purpose of this Standard to address the applications of each meter and not to endorse any specific meter. The operating principle of a pressure differential flow meter is based on two physical laws: conservation of energy and conservation of mass, realized when changes in flow cross-sectional area and/or flow path result in a change of pressure. This differential pressure, in turn, is a function of the flow velocity, fluid path, and fluid properties.

Included within the scope of this Standard are devices for which direct calibration experiments have been made, sufficient in number and data coverage, to enable valid systems of application to be based on their results and coefficients to be given with known uncertainties.

The devices installed in the pipe are referred to as *primary devices*, *primary elements*, or simply, *primaries*. The primary device may also include the associated upstream and downstream piping. The other instruments required for the flow measurement are often referred to as *secondary devices* or *secondaries*. For further information on secondary instrumentation, see ASME/ANSI MFC-8M.

The different primary elements covered in this Standard are as follows:

(a) orifice plates (Part 2) that can be used with the following pressure tap arrangements:
- *(1)* flange pressure taps
- *(2)* corner pressure taps
- *(3)* D and $D/2$ pressure taps

(b) nozzles (Part 3), each of which differs in the following shape and position of the pressure taps:
- *(1)* ASME long radius nozzles
- *(2)* Venturi nozzles
- *(3)* ISA 1932 nozzles

(c) ASME venturi tubes (Part 4), also known as Herschel or classical venturi tubes

Part 1 of this Standard contains general material such as definitions, symbols, and principles that apply to all the devices covered in Parts 2, 3, and 4 of this Standard with respect to the flow measurement of any single phase fluid.

This Standard does not apply to ASME Performance Test Code measurements. This Standard does not address those devices that operate on the principle of critical or choked flow condition of fluids. This Standard does not address issues of safety. It is the responsibility of the user to ensure that all systems conform to applicable safety requirements and regulations.

1-2 REFERENCES AND RELATED DOCUMENTS

Unless indicated otherwise, the latest issue of a reference standard shall be used.

ASME B36.10, Welded and Seamless Wrought Steel Pipe

ASME MFC-1M, Glossary of Terms Used in the Measurement of Fluid Flow in Pipes

ASME MFC-2M, Measurement of Uncertainty for Fluid Flow in Closed Conduits

ASME MFC-8M, Fluid Flow in Closed Conduits—Connections for Pressure Signal Transmission Between Primary and Secondary Devices

ASME PTC 6, Steam Turbines

ASME PTC 19.5, Flow Measurement

Publisher: The American Society of Mechanical Engineers (ASME), Three Park Avenue, New York, NY 10016-5990; Order Department: 22 Law Drive, Box 2300, Fairfield, NJ 07007-2300

ISO 3313, The Effect of Flow Pulsation on Flow Measuring Instruments: Orifice Plates, Nozzles, or Venturi Tubes, Turbine and Vortex Flow Meters

Copyright ASME International
Provided by IHS under license with ASME
No reproduction or networking permitted without license from IHS
Not for Resale

ISO 4006, Measurement of Fluid Flow in Closed Conduits—Vocabulary and Symbols

ISO 4288, Geometrical Product Specification—Surface Texture: Profile Method—Rules and Procedures for the Assessment of Surface Texture

ISO 5167, Measurement of Fluid Flow by Means of Pressure Differential Devices Inserted in Circular Cross-Section Conduits Running Full

ISO 5168, Measurement of Fluid Flow—Evaluation of Uncertainties

ISO 8316, Measurement of Liquid Flow in Closed Conduits—Method by Collection of the Liquid in a Volumetric Tank

ISO 9464, Guidelines for the Use of ISO 5167-1

Publisher: International Organization for Standardization (ISO), 1 rue de Varemebe, Case Postale 56, CH-1211, Geneve 20, Switzerland/Suisse

Niazi, A. and Thalayasingam, S., "Temperature Changes Across Orifice Meters," Proceedings of 19th North Sea Flow Measurement Workshop, Paper 13, Norway, October 2001.

Reader-Harris, M.J., "Pipe Roughness and Reynolds Number Limits for the Orifice Plate Discharge Coefficient Equation," Proceedings of 2nd International Symposium on Fluid Flow Measurement, Calgary, Canada, June 1990.

Reader-Harris, M.J., Sattary, J.A., and Spearman, E. P., "The Orifice Plate Discharge Coefficient Equation, *Progress Report No. PR14: EUEC/17 (EEC005),* East Kilbride, Glasgow, National Engineering Laboratory Executive Agency, May 1992.

Schlichting, H., *Boundary Layer Theory,* New York, McGraw-Hill, 1960.

Shen, J.J.S., "Characterization of Swirling Flow and its Effects on Orifice Metering," SPE 22865, Society of Petroleum Engineers, 1991.

Studzinski, W. and Bowen, J., White Paper on "Dynamic Effects on Orifice Measurement," American Petroleum Institute, Washington D.C., 1997.

Studzinski, W., Karnik, U., Lanasa, P., Morrow, T., Goodson, D., Husain, Z., and Gallagher, J., White Paper on "Orifice Meter Installation Configurations with and without Flow Conditioners," American Petroleum Institute, Washington D.C., 1997.

1-3 SYMBOLS AND DEFINITIONS

The symbols and terms used in this Standard are defined below and in ASME MFC-1M.

Both metric units (SI) and U.S. Customary units are used throughout this Standard. The SI units given first and the U.S. Customary units follow in parentheses. Equations are presented in both SI and U.S. Customary formulations and are labeled accordingly.

Table 1-1 outlines the symbols and subscripts that are used in this Standard.

1-3.1 Pressure Measurement

differential pressure, Δp (h_w): the static pressure difference generated by the primary device for the same elevation between the high pressure and low pressure taps used in the flow measurement.

pressure ratio, τ: the absolute static pressure at the low pressure metering tap divided by the absolute static pressure at the high pressure metering tap.

static pressure of a fluid flowing through a primary device, P: pressure measured at a wall pressure tap in the plane of a differential pressure tap (only the value of the static pressure is considered in the equations given in this Standard).

wall pressure tap: annular slot or circular hole drilled in the wall of a conduit in such a way that the edge of the hole is flush with the internal surface of the conduit (the hole is usually circular, but can be an annular slot).

1-3.2 Primary Devices

diameter ratio of a primary device used in a given pipe, β: ratio of the diameter of the orifice, bore, or throat of the primary device to the internal diameter of the pipe immediately upstream of the primary device. When the primary device has a cylindrical inlet section with the same diameter as that of the upstream pipe (as in the case of the classical venturi tube), the diameter ratio is the ratio of the throat diameter to the diameter of this cylindrical section at the plane of the high pressure taps.

nozzle: a primary device consisting of a convergent, curved profile having no discontinuities leading to a cylindrical section generally called the *throat*.

orifice plate: a plate, the thickness of which is small in comparison to the diameter of the pipe in which it is installed, and that contains a circular aperture concentric with the pipe axis.

NOTE: Standard orifice plates are described as "thin plate" because the thickness of the plate is small compared with the diameter of the pipe into which it is installed. Standard orifice plates are also described as "sharp square-edged" because the upstream edge of the orifice is sharp and square.

orifice, throat, or bore: opening of minimum cross-sectional area of a primary device.

NOTE: Standard primary device orifices are circular and coaxial with the pipeline.

venturi nozzle: a venturi tube consisting of a nozzle and a conical expanding section called the *divergent* or *recovery*.

venturi tube: a primary device that consists of a cylindrical entrance section, followed by a conical converging section, connected to a cylindrical section called the *throat*, and a conical expanding section called the *divergent* or *recovery*.

1-3.3 Flow

arithmetic mean deviation of the (roughness) profile, R_a: arithmetic mean deviation from the mean line of the pro-

Copyright ASME International
Provided by IHS under license with ASME
No reproduction or networking permitted without license from IHS

Not for Resale

Table 1-1 Symbols

Symbol	Quantity	Dimension [Note (1)]	SI Units	U.S. Customary Units
C	Coefficient of discharge	Dimensionless	...	...
$C_{m,P}$	Molar-heat capacity at constant pressure	$ML^2T^{-2}\,\theta^{-1}\,\text{mol}^{-1}$	J/(mol·K)	BTU/(mol·°R)
c_p	Heat capacity at constant pressure	$ML^2T^{-2}\,\theta^{-1}\,\text{mol}^{-1}$	J/(mol·K)	BTU/(mol·°R)
d	Diameter of orifice (or throat) of primary device at flowing conditions	L	mm	in.
D	Upstream internal pipe diameter (entrance diameter for classical venturi tube) at flowing conditions	L	mm	in.
H	Enthalpy	$ML^2T^{-2}\,\text{mol}^{-1}$	J/mol	BTU/mol
k	Uniform equivalent roughness	L	m	in.
K	Pressure loss coefficient	Dimensionless	...	...
l	Pressure tap spacing	L	m	in.
L	Relative pressure tap spacing, $L = l/D$	Dimensionless	...	...
P	Absolute static pressure of the fluid	$ML^{-1}T^{-2}$	Pa	$\text{lb}_\text{f}/\text{in.}^2$
q_m	Mass rate of flow	MT^{-1}	kg/s	$\text{lb}_\text{m}/\text{s}$
q_v	Volume rate of flow	L^3T^{-1}	m^3/s	ft^3/s
R	Radius	L	m	in.
R_a	Arithmetical mean deviation of the (roughness) profile	L	m	in.
R_g	Universal gas constant	$ML^2T^{-2}\,\theta^{-1}\,\text{mol}^{-1}$	J/(mol·K)	BTU/(mol·°R)
R_D	Reynolds number referred to D	Dimensionless	...	...
R_d	Reynolds number referred to d	Dimensionless	...	...
t	Temperature of the fluid	θ	°C	°F
T	Absolute temperature of the fluid	θ	K	°R
U	Relative uncertainty	Dimensionless	...	...
V	Mean axial velocity of the fluid in the pipe	LT^{-1}	m/s	ft/s
Z	Compressibility factor	Dimensionless	...	...
β	Diameter ratio, $\beta = d/D$	Dimensionless	...	...
γ	Ratio of specific heat capacities [Note (2)]	Dimensionless	...	...
δ	Absolute uncertainty	[Note (3)]	[Note (3)]	[Note (3)]
$\Delta p\ (h_w)$	Differential pressure [Note (4)]	$ML^{-1}T^{-2}$	Pa	$(\text{in. H}_2\text{O})_{\text{g,T}}$
$\Delta\varpi\ (h)$	Pressure loss	$ML^{-1}T^{-2}$	Pa	$\text{lb}_\text{f}/\text{in.}^2$
$\varepsilon\ (Y)$	Expansibility factor	Dimensionless	...	...
κ	Isentropic exponent [Note (2)]	Dimensionless	...	...
λ	Friction factor	Dimensionless	...	...
μ	Absolute viscosity of line fluid	$ML^{-1}T^{-2}$	Pa s	g cm/s^2 [Note (5)]
μ_{JT}	Joule-Thomson coefficient	$ML^{-1}T^{-2}\theta$	K/Pa	°R/ $\text{lb}_\text{f}/\text{in.}^2$
ν	Kinematic viscosity of line fluid, $\nu = \mu/\rho$	L^2T^{-1}	m^2/s	ft^2/s
ξ	Relative pressure loss	Dimensionless	...	...
ρ	Density of the fluid	ML^{-3}	kg/m^3	$\text{lb}_\text{m}/\text{ft}^3$
τ	Pressure ratio	Dimensionless	...	...
ϕ	Total angle of the divergent section	Dimensionless	...	...

GENERAL NOTES:

(a) Subscript 1 refers to conditions at upstream (high pressure) tap plane.

(b) Subscript 2 refers to conditions at downstream (low pressure) tap plane.

NOTES:

(1) Fundamental dimensions: M = mass, L = length, T = time, θ = temperature

(2) γ is the ratio of the specific heat capacity at constant pressure to the specific heat capacity at constant volume. For ideal gases, γ and the isentropic exponent, κ have the same value (see para. 1-3.2.3). These values depend on the nature of the gas.

(3) The dimensions and units are those of the corresponding quantity.

(4) In the U.S. Customary system, the pressure unit (inches $\text{H}_2\text{O})_{\text{g,T}}$ is equal to the difference between the pressure at the bottom of a column of water one inch high, at a temperature of 68°F, at a standard gravity of 32.17405 ft/s^2, and the standard atmospheric pressure of 14.696 $\text{lb}_\text{f}/\text{in.}^2$ on top of the water. One (inches $\text{H}_2\text{O})_{\text{g,T}}$ = 248.64107 Pa.

(5) In this Standard for U.S. practice, the unit centipoise is used for absolute viscosity and replaces the previous U.S. customary unit, 1 $\text{lb}_\text{m}/\text{ft-s}$ = 1 488.164 μ_cP.

Copyright ASME International
Provided by IHS under license with ASME
No reproduction or networking permitted without license from IHS

Not for Resale

file being measured. The mean line is such that the sum of the squares of the distances between the effective surface and the mean line is a minimum. In practice, R_a can be measured with standard equipment for machined surfaces, but can only be estimated for rougher surfaces of pipes (see ISO 4288). For pipes, the uniform equivalent roughness, k, can also be used. This value can be determined experimentally [see para. 1-6.1(e)] or taken from tables (see Appendix 1B).

discharge coefficient, C: coefficient defined for an incompressible fluid flow that relates the actual flow rate to the theoretical flow rate through a primary device. It is a dimensionless value given by the equation:

(SI Units)

$$C = \frac{\text{Actual } q_m}{\text{Theoretical } q_m} = \frac{q_m\sqrt{1-\beta^4}}{\frac{\pi}{4}d^2\sqrt{2\Delta p\rho_1}} \qquad (1\text{-}1)$$

(U.S. Customary Units)

$$C = \frac{\text{Actual } q_m}{\text{Theoretical } q_m} = \frac{q_m}{0.09970190d^2\sqrt{\frac{h_w\rho_1}{1-\beta^4}}}$$

NOTE: Calibrations by means of incompressible fluids of the primary devices in this Standard have shown that the discharge coefficient is dependent only on the Reynolds number for a given primary device in a given installation. The numerical value of C is the same for different installations whenever such installations are geometrically similar and the flow rates are characterized by identical Reynolds numbers.

The numerical values of C given in this Standard are based on experimental data. The uncertainty in the value of C can be reduced by flow calibration in an appropriate flow calibration facility.

NOTE: The quantity $[1/(1-\beta^4)^{0.5}]$ is often called the *velocity of approach factor* and $[C/(1-\beta^4)^{0.5}]$ is sometimes referred to as the *flow coefficient.*

expansibility factor, $\varepsilon(Y)$: Coefficient used to take into account the compressibility of the fluid. It is a dimensionless value given by the equation:

(SI Units)

$$\varepsilon = \frac{q_m\sqrt{1-\beta^4}}{\frac{\pi}{4}d^2C\sqrt{2\Delta p\rho_1}} \qquad (1\text{-}2)$$

(U.S. Customary Units)

$$Y = \frac{q_m}{0.09970190d^2C\sqrt{\frac{h_w\rho_1}{1-\beta^4}}}$$

Calibration of a given primary device using a compressible fluid (gas) shows that the above ratio is largely dependent on the values of the pressure ratio, beta ratio, and the isentropic exponent of the gas, and to a lesser degree, the value of the Reynolds number.

The method for representing these variations consists of multiplying the discharge coefficient C of the primary device (as determined by direct calibration using liquids for the same value of the Reynolds number) by the expansibility factor.

The expansibility factor is equal to unity when the fluid is incompressible and is less than unity when the fluid is compressible. This method is possible because experiments show that $\varepsilon(Y)$ is practically independent of the Reynolds number and, for a given diameter ratio of a given primary device, the expansibility factor depends only on the differential pressure, static pressure, and the isentropic exponent.

The numerical values of $\varepsilon(Y)$ for orifice plates given in this Standard are based on data determined experimentally. For nozzles and Venturi tubes, they are based on isentropic expansion properties.

isentropic exponent, κ: ratio of the relative variation in pressure to the corresponding relative variation in mass density under reversible and adiabatic transformation conditions.

NOTE: The isentropic exponent appears in the different equations for the expansibility factor and varies with the nature of the gas and with its temperature and pressure. There are many gases and vapors for which values of κ have not been published, particularly over a wide range of pressure and temperature. In such a case, for the purposes of this Standard, the ratio of the specific heat capacities of ideal gases can be used in place of the isentropic exponent.

Joule-Thomson coefficient, μ_{JT}: isenthalpic temperature-pressure coefficient that relates the rate of change of temperature with respect to pressure at constant enthalpy

$$\mu_{JT} = \left.\frac{\partial T}{\partial P}\right|_H \text{ or } \mu_{JT} = \frac{R_g T^2}{P C_{m,P}} \left.\frac{\partial Z}{\partial T}\right|_P \qquad (1\text{-}3)$$

where

T = absolute temperature
P = static pressure of a fluid flowing through a pipeline
H = enthalpy
R_g = universal gas constant
$C_{m,P}$ = molar-heat capacity at constant pressure
Z = compressibility factor

rate of flow of fluid passing through a primary device, q: quantity of fluid (mass or volume) passing through a cross section of a primary device per unit time.

NOTE: In all cases, it is necessary to state explicitly whether mass flow rate units, q_m or volumetric flow rate units, q_v are being used.

Reynolds number: dimensionless parameter expressing the ratio between the inertia and viscous forces. In this Standard, it is referred to either as

(a) the upstream condition of the fluid and the upstream diameter of the pipe

$$R_D = \frac{V_1 D}{\nu_1} = \frac{4q_m}{\pi\mu_1 D} \qquad (1\text{-}4)$$

Copyright ASME International
Provided by IHS under license with ASME
No reproduction or networking permitted without license from IHS

Not for Resale

or

(b) the bore or throat diameter of the primary device

$$R_d = \frac{R_D}{\beta} \tag{1-5}$$

1-4 PRINCIPLES OF THE METHOD OF MEASUREMENT AND COMPUTATION

1-4.1 Principle of the Method of Measurement

The principle of the method of measurement is based on the installation of the primary device into a pipeline that is running full. The installation of the primary device causes a pressure difference between the upstream side and the throat or downstream side of the device. The rate of flow can be determined from the measured value of this pressure difference, from knowledge of the characteristics of the flowing fluid, and the circumstances in which the device is being used.

The mass rate of flow can be determined since it is related to the differential pressure within the uncertainty limits stated in this Standard, by the following equation:

(SI Units)

$$q_m = \frac{\varepsilon \pi d^2}{4} \frac{C\sqrt{2\Delta p \rho_1}}{\sqrt{1-\beta^4}} \tag{1-6}$$

(U.S. Customary Units)

$$q_m = 0.09970190 C Y d^2 \sqrt{\frac{h_w \rho_1}{1-\beta^4}}$$

Similarly, the value of the volume rate of flow can be calculated, since

$$q_v = \frac{q_m}{\rho} \tag{1-7}$$

where ρ is the fluid density at the temperature and pressure for which the volume is stated.

1-4.2 Method of Determination of the Diameter Ratio of the Selected Standard Primary Device

In practice, when determining the diameter ratio of a primary element to be installed in a given pipeline, C and $\varepsilon\,(Y)$ used in the basic Eq. (1-6) are, in general, not known. Hence the following shall be selected:

(a) the type of primary device to be used

(b) a rate of flow

(c) corresponding value of the differential pressure.

The related values of q_m and Δp (h_w) are then inserted in the basic equation rewritten in the form:

(SI Units)

$$\frac{C\varepsilon\beta^2}{\sqrt{1-\beta^4}} = \frac{4q_m}{\pi D^2 \sqrt{2\Delta p \rho_1}} \tag{1-8}$$

(U.S. Customary Units)

$$\frac{CY\beta^2}{\sqrt{1-\beta^4}} = \frac{4q_m}{\pi D^2 \sqrt{h_w \rho_1}}$$

in which the diameter ratio of the primary device is determined by iteration (see Nonmandatory Appendix 1A).

1-4.3 Computation of Flow Rate

Computation for mass flow rate is performed by utilizing Eq. (1-6). It is necessary to know the density of the fluid at the working conditions. Since the value of the discharge coefficient (and its uncertainty) of some primary devices can be a function of Reynolds number, knowledge of the viscosity of the fluid at the working conditions is necessary also. In the case of a compressible fluid, it is also necessary to know the isentropic exponent of the fluid at the working conditions.

C may be dependent on R_D or R_d, both of which are dependent on q_m. In such cases, the final value of C, and therefore q_m, must be obtained by iteration. See Appendix 1A for guidance regarding the choice of the iteration procedure and initial estimates.

NOTE: The diameters d and D are the values of the diameters at the working conditions. Measurements taken at any other conditions must be corrected for any expansion or contraction of the primary device and the pipe due to the temperature and pressure of the process during measurement.

1-4.4 Determination of Density, Pressure, and Temperature

1-4.4.1 General. Any method of determining reliable values of the static pressure, temperature, and density of the fluid is acceptable if it does not interfere with the distribution of the flow at the measuring cross section.

1-4.4.2 Density. It is necessary to know the density of the fluid at the upstream pressure tap. It can either be measured directly or be calculated from an appropriate equation of state from knowledge of the absolute static pressure, absolute temperature, and composition of the fluid.

1-4.4.3 Static Pressure. The static pressure of the fluid shall be measured by means of an individual pipe-wall pressure tap, multiple interconnected pipe-wall pressure taps, or by means of piezometer ring taps (provided piezometer ring taps are permitted for the measurement of differential pressure in that tap plane for the particular primary device).

Where four pressure taps are interconnected to provide pressure measurements, it is best that they be connected together in a "Triple-T" arrangement as shown in Fig. 1-1.

The lengths of pipe or tubing for each pressure connection should be equal and the interconnection of each tap pair should be symmetric.

The static pressure tap can be separate from the taps provided for measuring the differential pressure. It is permissible to interconnect one pressure tap with a differential pressure measuring device and a static pressure measuring device, provided it is verified that this

Copyright ASME International
Provided by IHS under license with ASME
No reproduction or networking permitted without license from IHS Not for Resale

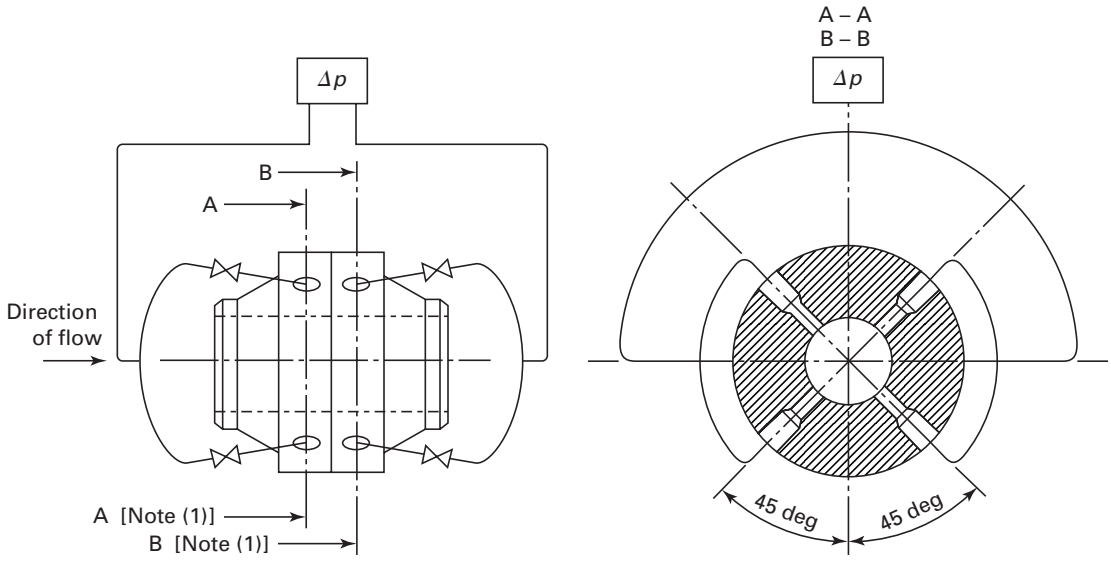

NOTE:
(1) Section A-A upstream also typical for Section B-B (downstream).

Fig. 1-1 "Triple-T" Arrangement

double connection does not lead to any errors in the measurements.

1-4.4.4 Temperature

(a) The temperature of the fluid at the primary device and that of the fluid upstream of the primary device are assumed to be the same [see para. 1-6.1(g)].

(b) The temperature of the fluid shall preferably be measured downstream of the primary device. The thermometer well or pocket shall be as small as possible. If the thermowell is located downstream, it shall be located between 5*D* and 15*D* downstream and shall be in accordance with the values given in Parts 2, 3, or 4 of this Standard.

NOTE: In the case of a Venturi tube, this distance is measured from the plane of the throat pressure tap. The pocket must also be at least 2*D* downstream from the downstream end of the diffuser section.

Within the limits of this Standard, it can be assumed that the downstream and upstream temperatures of the fluid are the same at the differential pressure taps. If the highest accuracy is required, the fluid is not an ideal gas, and there is a large pressure loss between the upstream pressure tap and the temperature sensation location downstream of the primary device, then it is necessary to calculate the upstream temperature from the downstream temperature. This is done assuming an isenthalpic expansion between the sensing two points. The corresponding temperature drop from the upstream tap to the downstream temperature location, ΔT, can be evaluated using the Joule-Thomson coefficient:

(SI Units)

$$\Delta T = \mu_{JT} \Delta \varpi \tag{1-9}$$

(U.S. Customary Units)

$$\Delta T = \mu_{JT} h$$

Experimental work has shown that this is an appropriate method for orifice plates, but additional work is necessary to prove its correctness for other primary devices.

Gas temperature measurement at pipe velocities higher than approximately 50 m/s (164 ft/s) can lead to additional uncertainty associated with the temperature recovery factor. An isenthalpic expansion is assumed between the upstream pressure tap and the downstream temperature tap. This assumption is consistent with there being an isentropic expansion between the upstream tap and the vena contracta or throat.

1-5 GENERAL REQUIREMENTS FOR MEASUREMENT

1-5.1 Primary Device

(a) The primary device shall be manufactured, installed, and used in accordance with this Standard.

When the manufacturing characteristics or conditions of use of the primary devices are outside the limits given in this Standard, it may be necessary to calibrate the primary device separately under the actual conditions of use.

(b) The condition of the primary device shall be checked after each measurement or after each series of measurements, or at intervals close enough to each other so that conformity with this Standard is maintained.

It should be noted that many fluids form deposits or scale on primary devices. Changes in discharge coeffi-

Copyright ASME International
Provided by IHS under license with ASME
No reproduction or networking permitted without license from IHS
Not for Resale

cient can occur over a period of time and can lead to values outside the uncertainties given in this Standard.

(c) The primary device shall be manufactured from materials for which the coefficient of expansion is known.

1-5.2 Nature of the Fluid

(a) The fluid can be either compressible or incompressible.

(b) The fluid shall be such that it can be considered as being physically and thermally homogeneous and single-phase. Colloidal solutions with a high degree of dispersion can be considered to behave as single-phase fluids.

(c) For measurement, it is necessary to know the density and viscosity of the fluid at the working conditions. In the case of a compressible fluid it is also necessary to know the isentropic exponent of the fluid at the working conditions.

1-5.3 Flow Conditions

1-5.3.1 Pulsating Flow. This Standard does not provide for the measurement of pulsating flow (see ISO 3313 for reference). The flow is considered sufficiently steady for this Standard to apply when

(SI Units)

$$\frac{\Delta p'_{rms}}{\Delta p} \leq 0.10 \qquad (1\text{-}10)$$

(U.S. Customary Units)

$$\frac{h'_{w\text{-}rms}}{h_w} \leq 0.10$$

where

$\overline{\Delta p}$ ($\overline{h_w}$) = time-mean value of the differential pressure

$\Delta p'_{rms}$ ($h'_{w\text{-}rms}$) = root-mean-square value of $\Delta p'$ (h'_w), the fluctuating component of the pressure

$\Delta p'_{rms}$ ($h'_{w\text{-}rms}$) can be measured accurately only by using a differential pressure sensor with sufficiently fast response (see ISO 3313 for reference). Furthermore, the whole secondary system should conform to the design recommendations specified in ASME MFC-8M.

1-5.3.2 Phase Change of Metered Fluid. The uncertainties specified in this Standard are valid only when there is no change of phase through the primary device. Increasing the bore or throat of the primary element will reduce the differential pressure and may prevent a change of phase. For liquids, the pressure in the throat section must not fall below the vapor pressure of the liquid (otherwise, cavitation will result). For gases, it is only necessary to calculate the temperature at the throat if the gas is in the vicinity of its dew point. The temperature in the throat can be calculated assuming an isentropic expansion from the upstream conditions (the upstream temperature may need to be calculated in accordance with the Eq. (1-8) such that the fluid is in the single-phase region.

1-5.3.3 Pressure Ratio. If the line fluid is a gas, the pressure ratio (throat pressure to upstream pressure ratio, P_2/P_1) shall be between 0.80 and 1.00. If the fluid is a liquid, there is no limit to the pressure ratio, provided there is no phase change in the process fluid, and the primary element does not deform or deflect excessively. For detailed information, refer to Parts 2, 3, or 4 of this Standard as appropriate for specific primary devices.

1-6 INSTALLATION REQUIREMENTS

1-6.1 General

(a) The method of measurement applies only to fluids flowing through a pipeline of circular cross section.

(b) The pipe shall run full at the measurement section.

(c) The primary device shall be fitted between two straight sections of cylindrical pipe of constant diameter and of specified minimum lengths in which there is no obstruction or branch connection other than those specified in Parts 2, 3, or 4 of this Standard as appropriate for specific primary devices.

The pipe is considered to be straight when the deviation from a straight line does not exceed 0.4% over its length. Flanges in the straight sections of pipe upstream and downstream of the primary device shall be at 90 deg ($\pm$ $^1/_2$ deg) to the pipe itself. The minimum straight lengths of pipe conforming to the above requirement necessary for a particular installation vary with the type and specification of the primary device and the nature of the pipe fittings involved.

(d) The pipe bore shall be circular over the entire minimum length of straight pipe required. The cross section can be considered circular if it appears so by visual inspection. The circularity of the outside of the pipe can be used as a guide, except in the immediate vicinity ($2D$) of the primary device where special requirements shall apply according to the type of primary device used.

Seamed pipe can be used, provided the internal weld bead is parallel to the pipe axis throughout the entire length of the pipe required to satisfy the installation requirements for the primary device being used. The seam must not be situated within 30 deg of any pressure tap used in conjunction with the primary device; no weld bead shall have a height greater than the permitted step in diameter according to the requirements of the primary device used. If spirally wound pipe is used then it must be honed or machined smooth.

(e) The interior of the pipe shall be clean at all times. Dirt that can readily detach from the pipe shall be removed. Any metallic pipe defects must be removed.

The acceptable value of pipe roughness depends on the primary device. In each case there are limits on the value of the arithmetic mean deviation of the roughness

Copyright ASME International
Provided by IHS under license with ASME
No reproduction or networking permitted without license from IHS Not for Resale

profile, R_a [see paras. 2-4.3.1, 3-4.1.2(i), 3-4.1.6.1, 3-4.2.2(f), 3-4.2.6.1, and 3-4.3.4.1 or para. 4-5.4.2). The internal surface roughness of the pipe shall be measured at approximately the same axial locations as those used to determine and verify the pipe internal diameter. A minimum of four roughness measurements shall be made to define the pipe internal surface roughness. In measuring R_a, an averaging-type surface roughness instrument with a cut-off value of not less than 0.75 mm (0.03 in.) shall be used. The roughness can change with time as stated in para. 1-5.1(b), and this should be taken into account in establishing the frequency of cleaning the pipe or checking the value of R_a.

An approximate value of R_a can be obtained by assuming that R_a is equal to k/π, where k is the uniform equivalent roughness as given in a Moody diagram. The value of k is given directly by a pressure loss test of a sample length of pipe, using the Colebrook-White Equation given in para. 1-6.4.1(e) to calculate the value of k from the measured value of friction factor, λ. Approximate values of k for different materials can also be obtained from the various tables given in reference literature, and Table 1B-1 gives values of k for a variety of materials.

(f) The pipe can be provided with drain holes and/or vent holes to permit the removal of solid deposits and entrained fluids. There shall be no flow through either drain holes or vent holes, however, during the flow measurement process. In many custody transfer applications, drain holes or vent holes are explicitly prohibited.

Drain and vent holes should not be located at the primary device. When it is not possible to conform to this requirement, the diameter of the vent or drain hole shall be less than 8% of the pipe inside diameter. The centerline of a pressure tap and the centerline of a drain or vent hole shall be offset from each other by at least 30 deg azimuthally (i.e., in the plane perpendicular to the axis of the pipe) and they shall be located no closer than $0.5D$ from each other.

(g) Insulation of the meter may be required if the temperature difference between ambient conditions and the flowing fluid are significant given the desired measurement uncertainty. This is particularly important if the fluid being metered is near its critical point: small temperature changes result in major density changes. It can be important at low flow rates, where heat transfer effects can cause distorted temperature profiles, and a change in the mean temperature value from the upstream to the downstream side of the meter run, as well as stratification of temperature layers from top to bottom. A temperature difference between the upstream and the downstream sides of the meter run can also occur.

1-6.2 Minimum Upstream and Downstream Straight Lengths of Pipe

(a) The primary device shall be installed in the pipeline at a position such that the flow conditions immediately upstream of the primary device approximate those of swirl-free, fully developed pipe flow. Conditions meeting this requirement are specified in para. 1-6.3.

(b) The required minimum upstream and downstream straight lengths required for installation between various fittings and the primary device depend on the primary device. For some commonly used fittings as specified in paras. 2-5, 3-5, and 4-5 of this Standard, the minimum straight lengths of pipe indicated can be used. Flow conditioners, such as those described in para. 1-6.4, however, often permit the use of shorter upstream pipe lengths. Such flow conditioners must be installed upstream of the primary device for fittings not covered by paras. 2-5, 3-5, and 4-5 of this Standard, or where sufficient straight lengths to achieve the desired level of uncertainty are not available.

1-6.3 General Requirement for Flow Conditions at the Primary Device

1-6.3.1 Requirement. If the specified conditions given in paras. 2-5, 3-5, and 4-5 of this Standard cannot be met, but the flow conditions immediately upstream of the primary device can be demonstrated to conform to swirl-free fully developed flow (as defined in paras. 1-6.3.2 and 1-6.3.3) over the entire Reynolds number range of the flow measurement application, the applicable sections of this Standard remain valid.

1-6.3.2 Swirl-Free Conditions. Swirl-free conditions can be taken to exist when the swirl angle at all points over the pipe cross-section is less than 2 deg.

1-6.3.3 Acceptable Flow Conditions. Acceptable velocity profile conditions can be presumed to exist when, at each point across the pipe cross-section, the ratio of the local axial velocity to the maximum axial velocity at the cross-section is within 5% of that which would be achieved in swirl-free flow at the same radial position at a cross-section located at the end of a very long (over $100D$) straight length of similar pipe with fully developed flow.

1-6.4 Flow Conditioners

Some additional material regarding flow conditioners is given in Nonmandatory Appendix 1C.

1-6.4.1 Compliance Testing

(a) If a given flow conditioner passes the compliance tests outlined in paras. 1-6.4.1(b) to 1-6.4.1(f) for a particular primary device, the flow conditioner can be used with the same type of primary device with any value of diameter ratio up to 0.67 downstream of any fitting. If the distance between the flow conditioner and the primary device, and that between the upstream installation and the flow conditioner, are in accordance with para. 1-6.4.1(e), and the downstream straight length of pipe is in accordance with the requirements for the particular primary device, it is not necessary to increase the

Copyright ASME International
Provided by IHS under license with ASME
No reproduction or networking permitted without license from IHS

Not for Resale

uncertainty of the discharge coefficient to take account of the installation.

(b) Using a primary device of diameter ratio 0.67, the shift in discharge coefficient from that obtained in a long straight pipe shall be less than 0.23% when the flow conditioner is installed in each of the following situations:

(1) in good flow conditions

(2) downstream of a 50% closed gate valve (or a segmental orifice plate)

(3) downstream of a device producing a high swirl (a maximum swirl angle across the pipe of 24 deg measured 18*D* downstream from the device, or at least 20 deg 30*D* downstream from it).

The length of straight pipe upstream of these fittings shall be sufficiently long so the primary device is not affected by any fittings further upstream.

These tests are required to establish that a flow conditioner does not have an adverse effect on good flow conditions, is effective on highly asymmetric flow, and is effective on highly swirling flow. The use of this test does not imply that flow measurement should be carried out downstream of control valves; rather, flow control should be performed downstream of the primary device.

(c) Using a primary device of diameter ratio 0.4, the shift in discharge coefficient from that obtained in a long straight pipe shall be less than 0.23% when the flow conditioner is installed downstream of the same fitting that generates a swirl as outlined in para. 1-6.4.1(b). This test is included in case there is still swirl downstream of the conditioner.

(d) To determine the acceptability of both the test facility and the primary devices with which the test is being conducted, the baseline discharge coefficient for a particular primary device, as determined in a long straight pipe by the test facility, shall lie within the uncertainty limits of the discharge coefficient (or discharge coefficient equation) for an uncalibrated primary device given by the applicable portions of this Standard. For these tests, the flow calibration facility must first verify that no swirl is present, then have sufficient straight pipe upstream of the primary device.

(e) If the flow conditioner is to be acceptable at any Reynolds number, then it is necessary to establish that it not only meets paras. 1-6.4.1(b) and (c) at one Reynolds number, but that it meets para. 1-6.4.1(b) at a second Reynolds number. If the two pipe Reynolds numbers are $R_{d\text{-low}}$ and $R_{d\text{-high}}$, then they shall meet the following criteria:

(1) $10^4 \le R_{d\text{-low}} \le 10^6$ and $R_{d\text{-high}} \ge 10^6$

(2) $\lambda(R_{d\text{-low}}) - \lambda(R_{d\text{-high}}) \ge 0.0036$

where λ is the pipe friction factor that can be obtained graphically from the Moody diagram, or from the Colebrook-White equation

$$\frac{1}{\sqrt{\lambda}} = 1.74 - 2\log_{10}\left(\frac{2k}{D} + \frac{18.7}{R_D\sqrt{\lambda}}\right) \qquad (1\text{-}10)$$

with k evaluated as πR_a.

If it is desired to use the flow conditioner only for $R_D > 3(10^6)$, it is sufficient to carry out the test in para. 1-6.4.1(e) at a single value of $R_D > 3(10^6)$.

If the flow conditioner is to be acceptable for any pipe size, then it is necessary to establish that it not only meets the requirements of paras. 1-6.4.1(b) and (c) at one pipe size, but that it meets the requirements of para. 1-6.4.1(b) at a second pipe size. If the two pipe diameters are D_{small} and D_{large}, then they shall meet the following criteria:

(1) $D_{\text{small}} \le 110$ mm (4 in.) (nominal)

(2) $D_{\text{large}} \le 180$ mm (8 in.) (nominal)

(f) The range of distances that are considered during the test between the flow conditioner and the primary device, and the range of distances between the upstream fitting and the flow conditioner, will determine the acceptable ranges of distances when the flow meter is used. The distances shall be expressed in terms of numbers of pipe diameters.

(g) If it is desired to carry out compliance testing for a flow conditioner for use with primary elements with $\beta > 0.67$, then it must be shown to meet the requirements of paras. 1-6.4.1(b) through (e). Then the test described in paras. 1-6.4.1(b), (d), and (e) shall be carried out at the maximum value of β over which the conditioner is to be used, $\beta_{\max}$. The permitted shift in discharge coefficient is increased to $(0.63\beta_{\max} - 0.192)\%$. In the case outlined in para. 1-6.4.1(e),

$$\lambda(R_{d\text{-low}}) - \lambda(R_{d\text{-high}}) \ge \frac{0.00241\beta_{\max} - 0.000735}{\beta_{\max}^{3.5}} \qquad (1\text{-}11)$$

Provided that the conditioner meets all the compliance tests outlined above, it has then passed the compliance test for $\beta \le \beta_{\max}$. The acceptable ranges of distances between the flow conditioner and the primary device and between the upstream fitting and the flow conditioner are determined as given in para. 1-6.4.1(f).

1-6.4.2 Specific Test. If a compliance test has not been carried out to permit the use of a flow conditioner downstream of any upstream fitting, it may be necessary to carry out a flow test specifically for the installation in question. The test will be deemed satisfactory if it shows that the shift in discharge coefficient from that obtained in a long straight pipe is less than 0.23%. The permitted shift in discharge coefficient can be increased to $(0.63\ \beta_{\max} - 0.192)\%$ for $0.67 < \beta \le 0.75$ (for orifice plates and venturi tubes), $0.67 < \beta \le 0.80$ (for flow nozzles), or $0.67 < \beta \le 0.775$ (for venturi nozzles). In this situation it is not necessary to increase the uncertainty of the discharge coefficient to take account of the installation.

1-7 UNCERTAINTIES IN THE MEASUREMENT OF FLOW RATE

Broader and more detailed information for calculation of the uncertainty in flow measurement is given in ASME MFC-2M and ISO/TR 5168.

Copyright ASME International
Provided by IHS under license with ASME
No reproduction or networking permitted without license from IHS
Not for Resale

1-7.1 Definition of Uncertainty

(a) For the purposes of this Standard the uncertainty is defined as a range of values within which the value of the measurement could reasonably be expected to lie providing a level of confidence of approximately 95%.

(b) The uncertainty in the measurement of the flow rate shall be calculated and given whenever a measurement is claimed to be in conformity with this Standard.

(c) The uncertainty can be expressed in absolute or relative terms and the result of the flow measurement can then be given in one of the following forms:

$$\begin{aligned}\text{flow rate} &= q \pm \delta q \\ &= q(1 \pm U'_q) \\ &= q \text{ within } (100\ U'_q)\%\end{aligned}$$

where the uncertainty δq shall have the same dimensions as q while $U'_q = \delta q/q$ and is dimensionless.

(d) A distinction is made between the uncertainties associated with measurements made by the user and those associated with quantities specified in this Standard. Uncertainties associated with quantities specified in this Standard are on the discharge coefficient and the expansibility factor, $\varepsilon(Y)$ and occur because variations in geometry are allowed, and because the investigations on which the values are based were made with some uncertainty as well.

1-7.2 Practical Computation of the Uncertainty

(a) The basic equation of computation of the mass flow rate, q_m, is

(SI Units)

$$q_m = \frac{C}{\sqrt{1-\beta^4}}\ \varepsilon\ \frac{\pi}{4}\ d^2\ \sqrt{2\Delta p \rho_1} \qquad (1\text{-}12)$$

(U.S. Customary Units)

$$q_m = 0.09970190 C Y d^2 \sqrt{\frac{h_w \rho_1}{1-\beta^4}}$$

The various quantities that appear on the right-hand side of this formula are not independent, so it is not correct to compute the uncertainty of q_m directly from the uncertainties of these quantities. C, for instance, is a function of d, D, V_1, ν_1, and ρ_1, while $\varepsilon(Y)$ is a function of d, D, $\Delta p\,(h_w)$, P, and κ.

(1) For most practical purposes, however, it is sufficient to assume that the uncertainties of C, $\varepsilon(Y)$, d, $\Delta p\,(h_w)$, and ρ_1 are independent of each other.

(2) A practical working formula for δq_m that takes into account the interdependence of C on d, and D (which enters into the calculation as a consequence of the dependence of C on β) can then be derived. Note that C may also be dependent on the Reynolds number. The deviations of C due to these influences, however, are of a second order and are included in the uncertainty on C.

Similarly, the deviations of $\varepsilon(Y)$ that are due to uncertainties in the value of β, the pressure ratio, and the isentropic exponent are also of a second order and are included in the uncertainty on $\varepsilon(Y)$. The contribution to the uncertainty due to the covariance terms can be considered as negligible.

(3) The uncertainties that will be included in a practical working equation for δq_m are, therefore, those of the quantities C, $\varepsilon(Y)$, d, D, $\Delta p\,(h_w)$, and ρ_1.

The practical working equation for the uncertainty, δq_m, of the mass rate of flow is as follows:

(SI Units)

$$\frac{\delta q_m}{q_m} = \left[\left(\frac{\delta C}{C}\right)^2 + \left(\frac{\delta \varepsilon}{\varepsilon}\right)^2 + \left(\frac{2\beta^4}{1-\beta^4}\right)^2\left(\frac{\delta D}{D}\right)^2 + \left(\frac{2}{1-\beta^4}\right)^2\left(\frac{\delta d}{d}\right)^2 + \frac{1}{4}\left(\frac{\delta \Delta p}{\Delta p}\right)^2 + \frac{1}{4}\left(\frac{\delta \rho_1}{\rho_1}\right)^2\right]^{\frac{1}{2}} \qquad (1\text{-}13)$$

(U.S. Customary Units)

$$\frac{\delta q_m}{q_m} = \left[\left(\frac{\delta C}{C}\right)^2 + \left(\frac{\delta Y}{Y}\right)^2 + \left(\frac{2\beta^4}{1-\beta^4}\right)^2\left(\frac{\delta D}{D}\right)^2 + \left(\frac{2}{1-\beta^4}\right)^2\left(\frac{\delta d}{d}\right)^2 + \frac{1}{4}\left(\frac{\delta h_w}{h_w}\right)^2 + \frac{1}{4}\left(\frac{\delta \rho_1}{\rho_1}\right)^2\right]^{\frac{1}{2}}$$

In this equation, some of the uncertainties, such as those on the discharge coefficient and expansibility factor, are given in this Standard [see paras. 1-7.2(a)(3)(a) and (a)(3)(b)], while others must be determined by the user [see paras. 1-6.2(a)(3)(c) and (d)].

(a) In Eq. (1-13), the values of $\delta C/C$ and of $\delta\varepsilon/\varepsilon$ ($\delta Y/Y$) shall be taken from the appropriate clauses of this Standard.

(b) When the straight pipe lengths are such that an additional uncertainty of 0.5% is considered, this additional uncertainty shall be added arithmetically in accordance with the requirements given in this Standard, and not root-mean-square as with the other uncertainties in Eq. (1-12). Other uncertainties shall be added arithmetically in the same way.

(c) In Eq. (1-13), the maximum values of $\delta D/D$ and $\delta d/d$ can be adopted or alternately, the smaller actual values can be calculated by the user. (The maximum value for $\delta D/D$ will not exceed 0.4% whereas the maximum value for $\delta d/d$ will not exceed 0.1%.)

(d) The values of $\delta\Delta p/\Delta p$ ($\delta h_w/h_w$) and $\delta\rho_1/\rho_1$ shall be determined by the user because this Standard does not specify the method of measurement of the quantities $\Delta p\,(h_w)$ and $\delta\rho_1$. The uncertainties in the measurement of both quantities may include components stated by manufacturers as a percentage of full scale. Calculation of percentage uncertainty below full scale must reflect this increased percentage uncertainty.

(e) In order to give an overall uncertainty of q_m providing a level of confidence of approximately 95%, the user-determined uncertainties must also be obtained to provide the same level of confidence.

Copyright ASME International
Provided by IHS under license with ASME
No reproduction or networking permitted without license from IHS

Not for Resale

NONMANDATORY APPENDIX 1A
ITERATIVE COMPUTATIONS

An iterative computation procedure is required when a problem cannot be solved by direct calculation methods (see para. 1-4.3).

In the case for orifice plates, for instance, iterative computations are always required to calculate

(a) the flow-rate q_m at given values of μ_1, ρ_1, D, $\Delta p\,(h_w)$, and d

(b) the orifice diameter d and β at given values of μ_1, ρ_1, D, $\Delta p\,(h_w)$, and q_m

(c) the differential pressure $\Delta p\,(h_w)$ at given values of μ_1, ρ_1, D, and q_m

(d) the diameters D and d at given values of μ_1, ρ_1, β, $\Delta p\,(h_w)$, and q_m

The principle is to regroup all known values of the basic flow-rate equation:

(SI Units)

$$q_m = \frac{C}{\sqrt{1-\beta^4}}\ \varepsilon\ \frac{\pi}{4}\ d^2\ \sqrt{2\Delta p \rho_1} \qquad \text{(1A-1)}$$

(U.S. Customary Units)

$$q_m = 0.09970190 C Y d^2 \sqrt{\frac{h_w \rho_1}{1-\beta^4}}$$

and the unknown values in the other member. The known member is then the "invariant" of the problem.

A first guess, X_1, is introduced into the unknown member and results in a difference, δ_1, between the two members. Iterative computation enables a second guess, X_2, to be substituted to obtain δ_2. Then X_1, X_2, δ_1, and δ_2 are entered into a linear algorithm that computes $X_3 \ldots X_n$ and $\delta_3 \ldots \delta_n$ until $|\delta_n|$ is smaller than a given value, or until two successive values of X or of δ are seen to be "equal" for a given precision.

An example of a linear algorithm with rapid convergence is

$$X_n = X_{n-1} - \delta_{n-1}\ \frac{X_{n-1} - X_{n-2}}{\delta_{n-1} - \delta_{n-2}} \qquad \text{(1A-2)}$$

If the computations are carried out using a programmable calculator, the use of a linear algorithm reduces only slightly the resulting calculations by successive substitutions in the case of computations found in applications relative to this part of this Standard.

The values of d, D, and β to be introduced in the calculations are those prevailing under the working conditions.

For orifice plates, if the plate and the metering tube are made of different materials, it is possible that the variation in β due to the working temperature is significant. Examples of full schemes for iterative computations are given in Table 1A-1.

Table 1A-1 Methods for Iterative Computation

Problem	$q =$	$d =$	$\Delta p =$	$D =$
At Given Values	μ_1, ρ_1, D, d, Δp	μ_1, ρ_1, D, q_m, Δp	μ_1, ρ_1, D, d, q_m	μ_1, ρ_1, d, q_m, Δp
Please Find	q_m and q_v	d and β	Δp	D and d
Invariant	$A_1 = \dfrac{\varepsilon d^2 \sqrt{2\Delta p \rho_1}}{\mu_1 D \sqrt{1-\beta^4}}$	$A_2 = \dfrac{\mu_1 R_D}{D\sqrt{2\Delta p \rho_1}}$	$A_3 = \dfrac{8(1-\beta^4)}{\rho_1}\left(\dfrac{q_m}{C\pi d^2}\right)^2$	$A_4 = \dfrac{4\varepsilon\beta^2 q_m \sqrt{2\Delta p \rho_1}}{\pi {\mu_1}^2 \sqrt{1-\beta^4}}$
Iteration Equation	$\dfrac{R_D}{C} = A_1$	$\dfrac{C\,\varepsilon\beta^2}{\sqrt{1-\beta^4}} = A_2$	$\dfrac{\Delta p}{\varepsilon^{-2}} = A_3$	$\dfrac{R_D^2}{C} = A_4$
Variable in Linear Algorithm	$X_1 = R_D = CA_1$	$X_2 = \dfrac{\beta^2}{\sqrt{1-\beta^4}} = \dfrac{A_2}{C}$	$X_3 = \Delta p = \varepsilon^{-2} A_3$	$X_4 = R_D = \sqrt{CA_1}$
Precision Criterion [Note (1)]	$\left\lvert \dfrac{A_1 - \dfrac{X_1}{C}}{A_1} \right\rvert < 1 \times 10^{-n}$	$\left\lvert \dfrac{A_2 - X_2 C\varepsilon}{A_2} \right\rvert < 1 \times 10^{-n}$	$\left\lvert \dfrac{A_3 - \dfrac{X_3}{\varepsilon^{-2}}}{A_3} \right\rvert < 1 \times 10^{-n}$	$\left\lvert \dfrac{A_4 - \dfrac{{X_4}^2}{C}}{A_4} \right\rvert < 1 \times 10^{-n}$
First Guess	$C = C_\infty$	$C = 0.606$ (Orifice plate) $C = 1$ (Other primaries) $\varepsilon = 1$	$\varepsilon = 1$	$C = C_\infty$ $D = D_\infty$ (if flange tap)
Second Guess	$q_m = \dfrac{\pi}{4}\mu_1 D X_1$ $q_v = \dfrac{q_m}{\rho_1}$	$d = D\left(\dfrac{{X_2}^2}{1+{X_2}^2}\right)^{0.25}$ $\beta = \dfrac{d}{D}$	$\Delta p = X_3$ [Note (2)]	$D = \dfrac{4q_m}{\pi\mu_1 X_4}$ $d = \beta D$

NOTES:
(1) Where n is chosen by the user.
(2) If the fluid is considered incompressible, Δp is obtained in first loop.

--`,,```,,,,````-`-`,,`,,`,`,,`---
Copyright ASME International
Provided by IHS under license with ASME
No reproduction or networking permitted without license from IHS
Not for Resale

NONMANDATORY APPENDIX 1B
EXAMPLES OF VALUES OF PIPE WALL UNIFORM EQUIVALENT ROUGHNESS, *k*

Table 1B-1 Values of *k*

Material	Condition	*k*	R_a	
			mm	in.
Brass, Copper, Aluminum, Plastics, Glass	Smooth, without sediment	< 0.03	< 0.01	< 0.0004
	New, stainless	< 0.03	< 0.01	< 0.0004
	New, seamless, cold drawn	< 0.03	< 0.01	< 0.0004
	New, seamless, hot drawn	0.05 to 0.10	0.015 to 0.030	0.0006 to 0.0012
	New, seamless, rolled	0.05 to 0.10	0.015 to 0.030	0.0006 to 0.0012
	New, welded longitudinally	0.05 to 0.10	0.015 to 0.030	0.0006 to 0.0012
	New, welded spirally	0.10	0.03	0.0012
	Slightly rusted	0.10 to 0.20	0.03 to 0.06	0.0012 to 0.0024
Steel	Rusty	0.20 to 0.30	0.06 to 0.10	0.0024 to 0.0039
	Encrusted	0.50 to 2	0.15 to 0.60	0.0059 to 0.0236
	Heavy encrustation	> 2	> 0.6	> 0.0236
	Bituminized, new	0.03 to 0.05	0.010 to 0.015	0.0004 to 0.0006
	Bituminized, normal	0.10 to 0.20	0.03 to 0.06	0.0012 to 0.0024
	Galvanized	0.13	0.04	0.0016
Cast Iron	New	0.25	0.08	0.0031
	Rusty	1.0 to 1.5	0.3 to 0.5	0.0118 to 0.0197
	Rust encrusted	> 1.5	> 0.5	> 0.0197
	Bituminized, new	0.03 to 0.05	0.010 to 0.015	0.0004 to 0.0006
Asbestos Cement	New	< 0.03	< 0.01	< 0.0004
	Typical, uncoated	0.05	0.015	0.0006

GENERAL NOTE: For this table, R_a has been calculated on the basis that $R_a \approx (k/\pi)$.

Copyright ASME International
Provided by IHS under license with ASME
No reproduction or networking permitted without license from IHS
Not for Resale

NONMANDATORY APPENDIX 1C
FLOW CONDITIONERS AND FLOW STRAIGHTENERS

1C-1 GENERAL

Flow conditioners can be classified as either true flow conditioners or flow straighteners. In this Standard, but beyond this Appendix, the term "flow conditioner" is used to describe both true flow conditioners and flow straighteners.

Inclusion in this Appendix does not imply that a flow conditioner or flow straightener has passed the compliance test in para. 1-6.4.1 with any particular primary device at any particular location.

The descriptions of flow straighteners and flow conditioners given here does not limit the use of other designs that have been tested and proved to provide sufficiently small shifts in discharge coefficient when compared with discharge coefficients obtained in a long straight pipe.

1C-2 FLOW STRAIGHTENERS

1C-2.1 General Description

A flow straightener is a device that removes or significantly reduces swirl, but may not simultaneously produce the flow conditions specified in para. 1-6.3.3. The tube bundle (see Fig. 1C-1), the Étoile (see Fig. 1C-2), and the AMCA (see Fig. 1C-3) are all examples of flow straighteners.

1C-2.2 Examples

1C-2.2.1 The Tube Bundle Flow Straightener. The tube bundle flow straightener consists of a bundle of parallel and tangential tubes fixed together and held rigidly in the pipe (see Fig. 1C-1). It is important to ensure that the various tubes are parallel to each other and to the pipe axis since, if this requirement is not met, the straightener itself might introduce swirl to the flow.

There shall be at least nineteen tubes. Their length shall be greater than or equal to $10d_t$, where d_t is shown on Fig. 1C-1. The tubes shall be joined together and the bundle shall rest against the pipe.

The pressure loss coefficient, K, for the tube bundle flow straightener depends on the number of the tubes and their wall thickness, but is approximately equal to 0.75, where K is given by the following equation:

$$K = \frac{\Delta p_c}{\frac{1}{2}\rho V^2} \qquad \text{(1C-1)}$$

where

Δp_c = pressure loss across the flow straightener or flow conditioner

V = mean axial velocity of the fluid in the pipe

A special case (the 19-tube bundle flow straightener) is described in para. 2-5.3.2 of this Standard.

1C-2.2.2 The Étoile Straightener. The Étoile straightener (see Fig. 1C-2) consists of eight radial vanes at equal angular spacing with a length equal to twice the diameter of the pipe (see Fig. 1C-4). The vanes shall be as thin as possible but shall provide adequate strength. The pressure loss coefficient, K, for the Étoile straightener is approximately equal to 0.25.

1C-2.2.3 The AMCA Straightener. The AMCA straightener consists of a honeycomb with square meshes, the dimensions of which are shown in Figure 1C-3. The vanes shall be as thin as possible but shall provide adequate strength. The pressure loss coefficient, K, for the AMCA straightener is approximately equal to 0.25.

1C-3 FLOW CONDITIONERS

1C-3.1 General Description

A flow conditioner is a device that, in addition to meeting the requirements of removing or significantly reducing swirl, will redistribute the velocity profile to produce conditions close to those of para. 1-6.3.3.

Many flow conditioners either are or include a perforated plate. Several such devices are now described in technical literature, and they are in general easier to manufacture, install, and accommodate than the tube bundle flow straightener. They have the advantage that their thickness is typically around $D/8$ as compared to a length of at least $2D$ for the tube bundle. Moreover, since they can be drilled from the solid rather than fabricated, a more robust device is produced offering repeatable performance.

In these devices swirl is reduced and the profile simultaneously redistributed by a suitable arrangement of hole and plate depth. A number of different designs are available as indicated in Nonmandatory Appendix 2B. The geometry of the plate is critical in determining the performance, effectiveness, and pressure loss across the plate. The NEL (Spearman), Sprenkle, and Zanker flow conditioners are examples of flow conditioners.

Copyright ASME International
Provided by IHS under license with ASME
No reproduction or networking permitted without license from IHS
Not for Resale

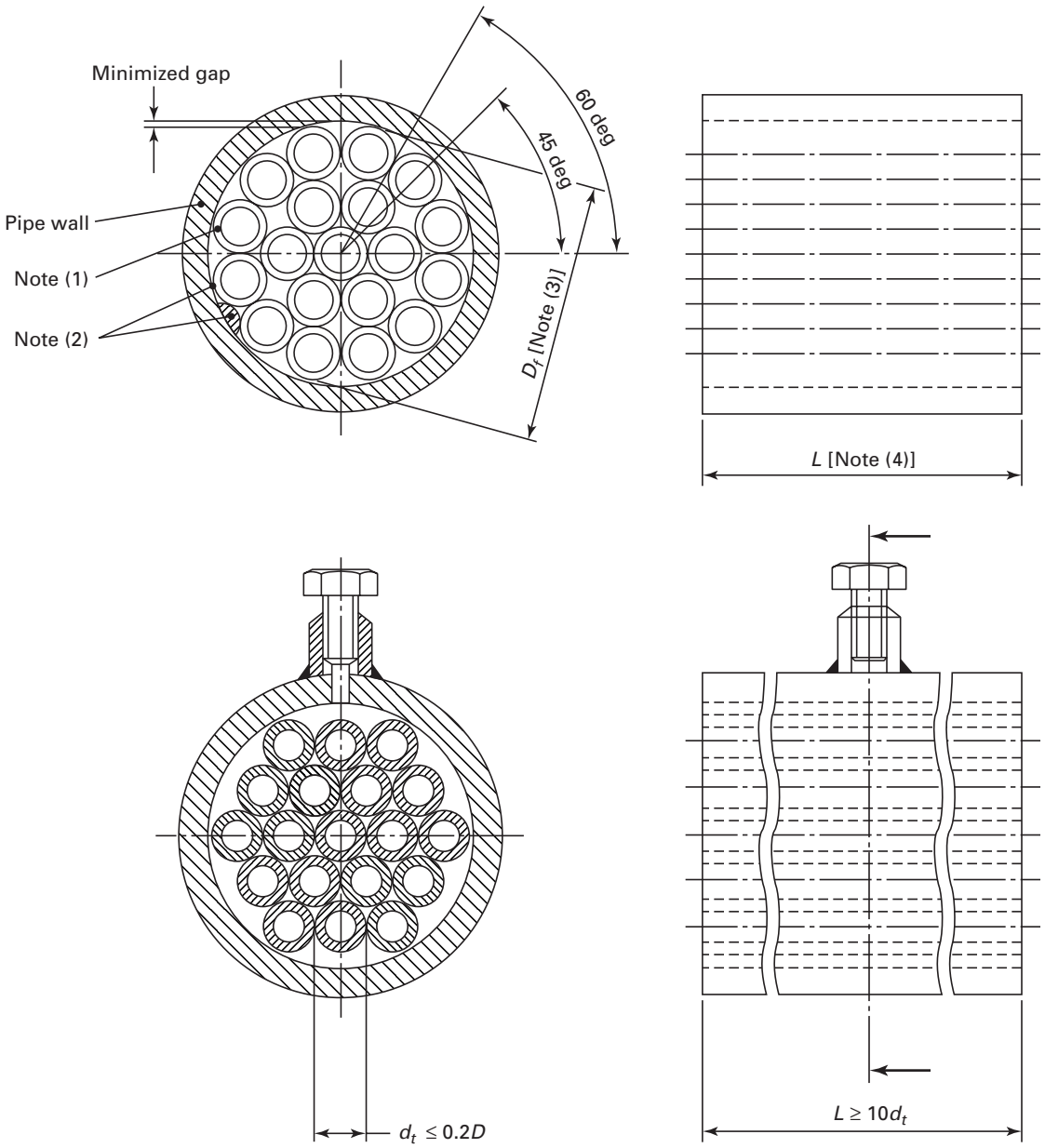

NOTES:
(1) Tube wall thickness, $<0.025D$.
(2) Centering spacer locations, typically four locations.
(3) D_f = flow straightener outside diameter, $0.95D \leq D_f \leq D$.
(4) Length, L, of the tubes, $2D \leq L \leq 3D$, as close to $2D$ as possible.

Fig. 1C-1 Tube Bundle Flow Straightener

1C-3.2 Examples

1C-3.2.1 The NEL (Spearman) Flow Conditioner. The NEL (Spearman) flow conditioner is shown in Fig. 1C-4. The NEL (Spearman) flow conditioner is shown in Fig. 1C-4. The dimensions of the holes are a function of the pipe inside diameter, D. The pressure loss coefficient, K, for the NEL (Spearman) flow conditioner is approximately equal to 3.2.

1C-3.2.2 Sprenkle Conditioner. The Sprenkle conditioner consists of three perforated plates in series with a length equal to $D \pm 0.1D$ between successive plates.

Copyright ASME International
Provided by IHS under license with ASME
No reproduction or networking permitted without license from IHS
Not for Resale

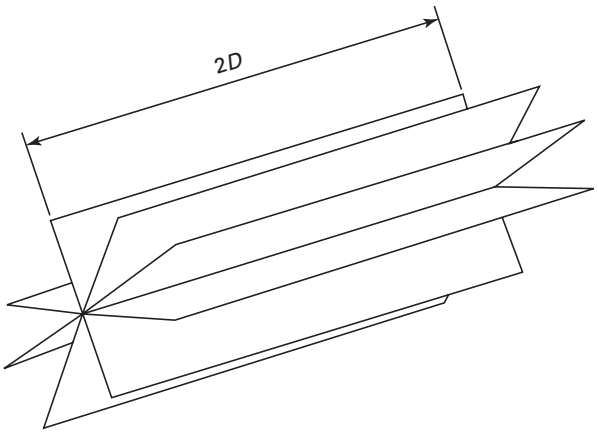

Fig. 1C-2 Étoile Straightener

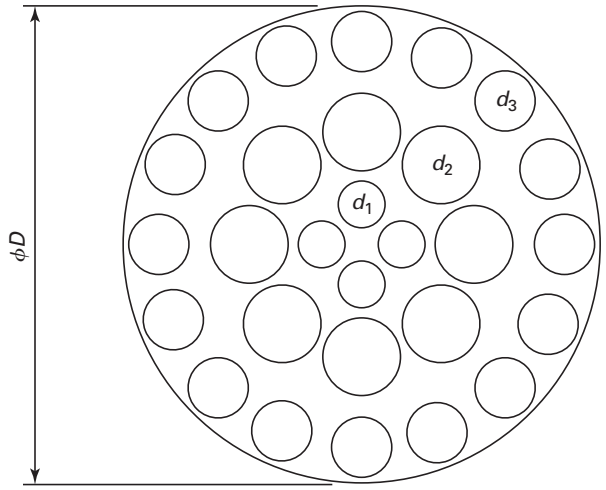

GENERAL NOTES:
(a) For d_1, hole diameter = 0.10D, pitch circle diameter = 0.18D, 4 holes.
(b) For d_2, hole diameter = 0.16D, pitch circle diameter = 0.48D, 8 holes.
(c) For d_3, hole diameter = 0.12D, pitch circle diameter = 0.86D, 16 holes.
(d) The perforated plate thickness is 0.12D.

Fig. 1C-4 NEL (Spearman) Flow Conditioner

The holes should be chamfered at 45 deg on the upstream side to reduce the pressure loss, and the total area of the holes in each plate shall be greater than 40% of the cross-sectional area of the pipe. The ratio of plate thickness to hole diameter shall be at least 1 and the diameter of the holes shall be less than or equal to 0.05D (see Fig. 1C-5).

The three plates are held together by bars or studs that are located around the periphery of the pipe bore and should be as small a diameter as possible, but shall provide the required strength.

The pressure loss coefficient, K, for the Sprenkle conditioner is approximately equal to 11 if there is an inlet bevel, or 14 if there is no inlet bevel.

1C-3.2.4 The Zanker Conditioner. The Zanker conditioner consists of a perforated plate with holes of certain specified sizes followed by a number of channels (one for each hole) formed by the intersection of a number of plates (see Fig. 1C-6). The various plates shall be as thin as possible but shall provide adequate strength. The pressure loss coefficient, K, for the Zanker flow conditioner is approximately equal to 5.

1C-3.2.5 Zanker Flow Conditioner Plate. The Zanker flow conditioner plate described here is a development of the Zanker conditioner described in para. 1C-3.2.4.

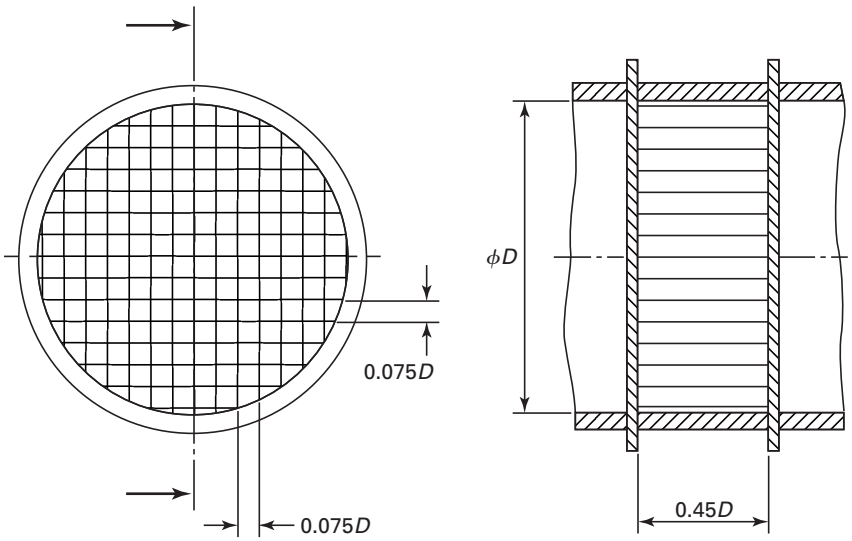

Fig. 1C-3 AMCA Straightener

Copyright ASME International
Provided by IHS under license with ASME
No reproduction or networking permitted without license from IHS
Not for Resale

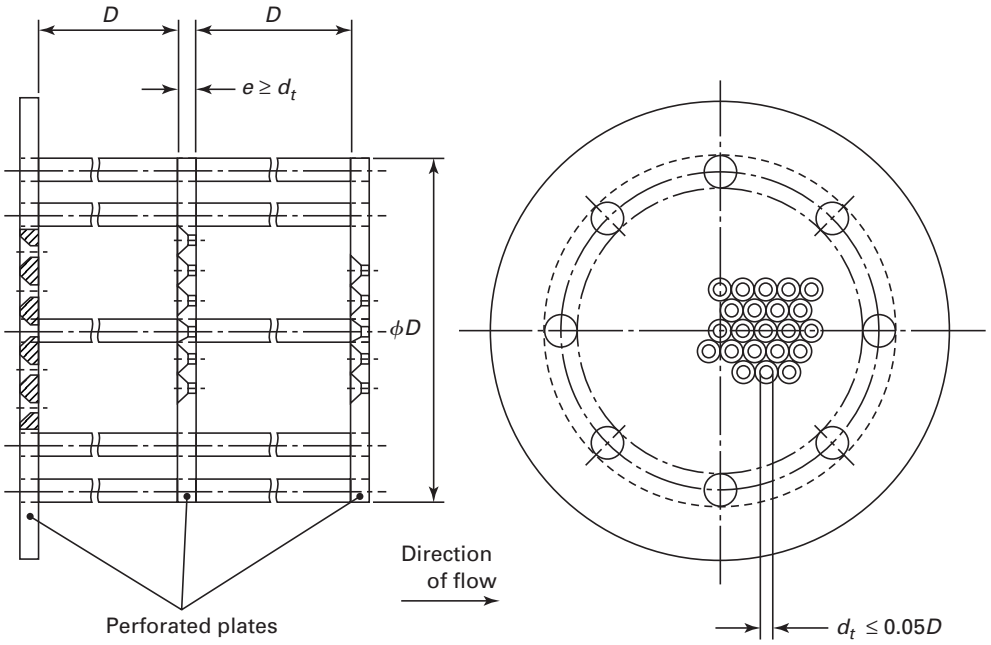

Fig. 1C-5 Sprenkle Flow Conditioner

The Zanker flow conditioner plate has the same distribution of holes in a plate but does not have the egg-box honeycomb attached to the plate; instead the plate thickness has been increased to $D/8$.

The Zanker flow conditioner plate is illustrated in Fig. 1C-7 and consists of 32 bored holes arranged in a symmetrical circular pattern. The dimensions of the holes are a function of the pipe inside diameter D. The tolerance on the diameter of each hole is $\pm$ 0.1 mm ($\pm$ 0.004 in.) for $D < 100$ mm (4 in.).

The perforated plate thickness, t_c, is such that $0.12D \leq t_c \leq 0.15D$. The flange thickness depends on the application; the outer diameter and flange face surfaces depend on the flange type and application. The pressure loss coefficient, K, for the Zanker flow conditioner plate is approximately equal to 3.

Copyright ASME International
Provided by IHS under license with ASME
No reproduction or networking permitted without license from IHS
Not for Resale

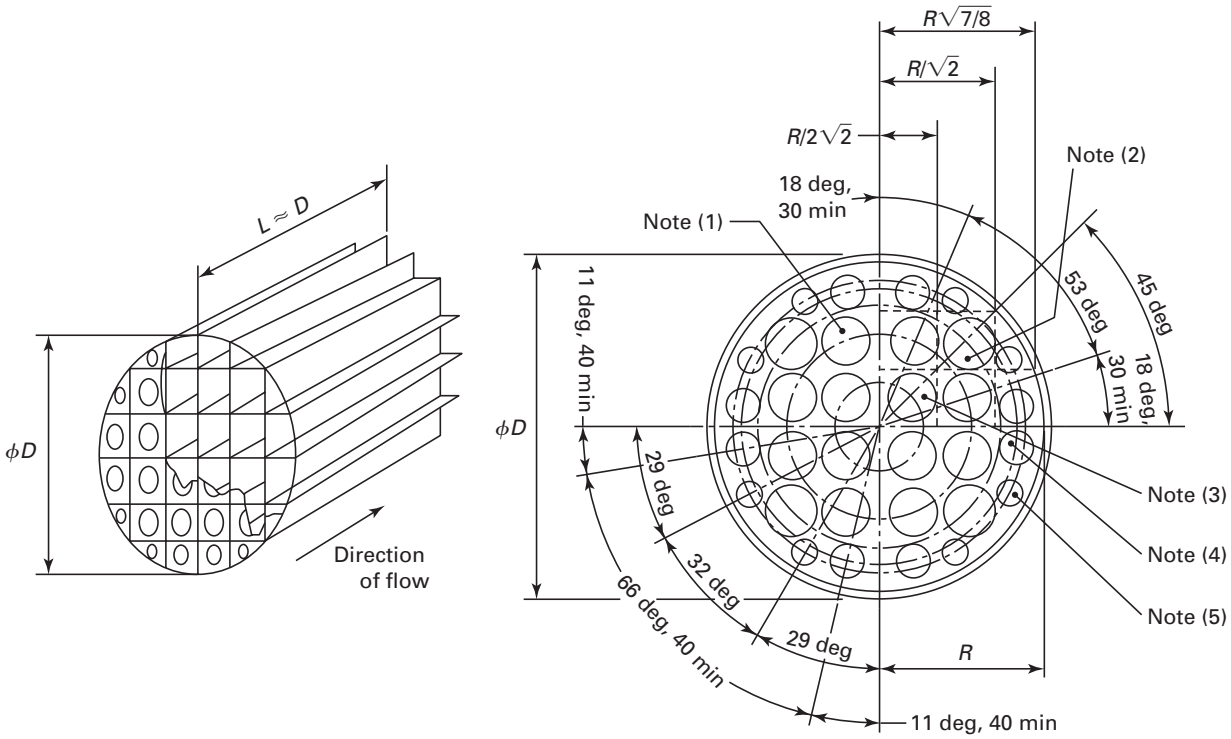

NOTES:
(1) Hole diameter = 0.139*D*, pitch circle diameter = 0.56*D*, 8 holes.
(2) Hole diameter = 0.1365*D*, pitch circle diameter = 0.75*D*, 4 holes.
(3) Hole diameter = 0.141*D*, pitch circle diameter = 0.25*D*, 4 holes.
(4) Hole diameter = 0.110*D*, pitch circle diameter = 0.85*D*, 8 holes.
(5) Hole diameter = 0.077*D*, pitch circle diameter = 0.90*D*, 4 holes.

Fig. 1C-6 Zanker Flow Conditioner

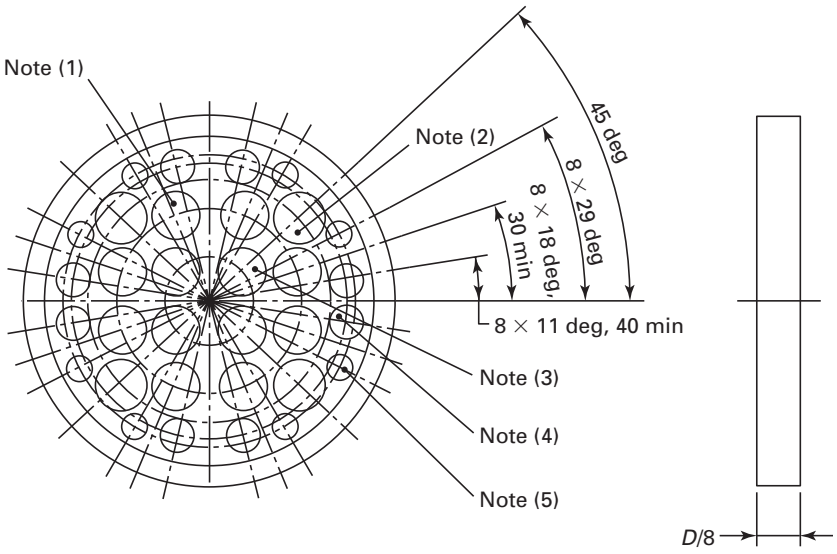

NOTES:
(1) Hole diameter = 0.139*D*, pitch circle diameter = 0.56*D* ± 0.0056*D*, 8 holes.
(2) Hole diameter = 0.1365*D*, pitch circle diameter = 0.75*D* ± 0.0075*D*, 4 holes.
(3) Hole diameter = 0.141*D*, pitch circle diameter = 0.25*D* ± 0.0025*D*, 4 holes.
(4) Hole diameter = 0.110*D*, pitch circle diameter = 0.85*D* ± 0.0085*D*, 8 holes.
(5) Hole diameter = 0.077*D*, pitch circle diameter = 0.90*D* ± 0.009*D*, 8 holes.

Fig. 1C-7 Zanker Flow Conditioner Plate

Copyright ASME International
Provided by IHS under license with ASME
No reproduction or networking permitted without license from IHS
Not for Resale

Part 2
Orifice Plates

2-1 SCOPE AND FIELD OF APPLICATION

Part 2 specifies the geometry and method of use (installation and operating conditions) of orifice plates when they are inserted in a conduit running full to determine the flow rate of the fluid flowing in the conduit.

It also provides background information for calculating the flow rate and should be applied in conjunction with the requirements given in Part 1 of this Standard, which contains general material and applies to all the devices covered by this Standard, that is, orifice plates, nozzles, and venturi tubes.

The primary device dealt with in Part 2 is an orifice plate used with flange pressure taps, with corner pressure taps, or with D and $D/2$ pressure taps. Other pressure taps that have been used with orifice plates, such as vena contracta and pipe taps, are not covered by this Standard. This Part applies only to a flow that remains subsonic throughout the measuring section and is steady or varies only slowly with time and where the fluid is considered as single-phase. It does not apply to the measurement of pulsating flow. It does not cover the use of orifice plates in nominal pipe sizes less than 50 mm (2 in.) or more than 1 000 mm (40 in.), or for pipe Reynolds numbers below 5,000.

2-2 REFERENCES AND RELATED DOCUMENTS

Normative references and definitions used within this document are contained in Part 1 of this Standard as are the associated symbols, subscripts, and definitions. References and related documents for this Part are listed below.

ISO/TR 3313:1998, Measurement of Fluid Flow in Closed Conduits—Guidelines on the Effects of Flow Pulsations on Flow-Measurement Instruments.

ISO 4288:1996, Geometrical Product Specification (GPS) — Surface Texture: Profile Method—Rules and Procedures for the Assessment of Surface Texture.

ISO/TR 5168:1998, Measurement of Fluid Flow—Evaluation of Uncertainties

ISO/TR 9464:1998, Guidelines for the Use of ISO 5167-1:1991

Publisher: International Organization for Standardization (ISO), 1 rue de Varembe, Case Postale 56, CH-1211, Geneve 20, Switzerland/Suisse

Hobbs, J.M. and Humphreys, J.S., "The Effect of Orifice Plate Geometry upon Discharge Coefficient," *Flow Measurement and Instrumentation,* April 1990: 133–140.

Karnik, U., "A Compact Orifice Meter/Flow Conditioner Package," Proceedings of 3rd International Symposium on Fluid Flow Measurement, San Antonio, Texas, March 1995.

Karnik, U., Studzinski, W., Geerligs, J., and Kowch, R., "Scale up Tests on the NOVA Flow Conditioner for Orifice Meter Applications," Proceedings of 4th International Symposium on Fluid Flow Measurement, Denver, Colorado, June 1999.

Morrow, T.B., "Metering Research Facility Program Orifice Meter Installation Effects: Ten-Inch Sliding Flow Conditioner Tests," *Technical Memorandum GRI Report No. GRI-96/0391,* Southwest Research Institute, November 1996.

Morrow, T.B. and Morrison, G.L., "Effect of Meter Tube Roughness on Orifice Cd," Proceedings of 4th International Symposium on Fluid Flow Measurement, Denver, Colorado, June 1999.

Reader-Harris, M.J. and Brunton, W.C., "The Effect of Diameter Steps in Upstream Pipework on Orifice Plate Discharge Coefficients," Proceedings of 5th International Symposium on Fluid Flow Measurement, Washington, D.C., April 2002.

Reader-Harris, M.J., "Pipe Roughness and Reynolds Number Limits for the Orifice Plate Discharge Coefficient Equation," Proceedings of 2nd International Symposium on Fluid Flow Measurement, Calgary, Canada, June 1990: 29–43.

Reader-Harris, M.J., "The Equation for the Expansibility Factor for Orifice Plates," Proceedings of FLOMEKO 98, Lund, Sweden, June 1998: 209–214.

Reader-Harris, M.J. and Sattary, J.A., "The Orifice Plate Discharge Coefficient Equation—the Equation for ISO 5167-1," Proceedings of 14th North Sea Flow Measurement Workshop, Peebles, Scotland, October 1996: 24.

Reader-Harris, M.J., Sattary, J.A., and Spearman, E.P., "The Orifice Plate Discharge Coefficient Equation," *Progress Report No. PR14: EUEC/17 (EEC005),* East Kilbride, Glasgow, National Engineering Laboratory Executive Agency, May 1992.

Studzinski, W., Karnik, U., LaNasa, P., Morrow, T., Goodson, D., Husain, Z., and Gallagher, J. White Paper on "Orifice Meter Installation Configurations with and without Flow Conditioners," American Petroleum Institute, Washington, D.C., 1997.

Studzinski, W., Weiss, M., Attia, J., and Geerligs, J., "Effect of Reducers, Expanders, a Gate Valve, and Two Elbows in Perpendicular Planes on Orifice Meter Performance," Proceedings of Flow Measurement 2001 International Conference, Paper 3.1, Peebles, Scotland, May 2001.

Urner, G., "Pressure Loss of Orifice Plates According to

Copyright ASME International
Provided by IHS under license with ASME
No reproduction or networking permitted without license from IHS

Not for Resale

ISO 5167," *Flow Measurement and Instrumentation,* March 1997: 39–41.

Weiss, M., Studzinski, W., and Attia, J., "Performance Evaluation of Orifice Meter Standards for Selected T-Junction and Elbow Installations," Proceedings of 5th International Symposium on Fluid Flow Measurement, Washington, D.C., April 2002.

Zanker, K.J. and Goodson, D., "Qualification of a Flow Conditioning Device According to the New API 14.3 Procedure," *Flow Measurement and Instrumentation,* June 2000: 79–87.

2-3 PRINCIPLES OF THE METHOD OF MEASUREMENT AND COMPUTATION

The principle of the method of measurement is based on the installation of an orifice plate into a pipeline in which a fluid is running full. The presence of the orifice plate causes a static pressure difference to exist between the upstream section and downstream sides of the plate. The mass rate of flow can be determined by Eq. (2-1):

(SI Units)

$$q_m = \frac{C}{\sqrt{1-\beta^4}}\ \varepsilon\ \frac{\pi}{4}\ d^2\ \sqrt{2\Delta p \rho_1} \qquad (2\text{-}1)$$

(U.S. Customary Units)

$$q_m = 0.09970190 C Y d^2 \sqrt{\frac{h_w \rho_1}{1-\beta^4}}$$

Δp (h_w) represents the differential pressure, as defined in Part 1 of this Standard. The diameters d and D mentioned in the equations are the values of the diameters at the working conditions. Measurements taken at any other conditions must be corrected for any possible expansion or contraction of the primary device and the pipe due to the temperature and pressure of the fluid during measurement.

The value of the volume rate of flow can be simply calculated since

$$q_v = \frac{q_m}{\rho} \qquad (2\text{-}2)$$

where

ρ = fluid density at the temperature and pressure for which the volume is stated

The uncertainty limits can be calculated using the procedure given in para. 1-7 of this Standard. Broader and more detailed information for calculation of the uncertainty in flow measurement is given in ASME MFC-2M and ISO/TR 5168.

Computation for flow rate is performed by utilizing Eq. (2-1). It is necessary to know the density and the viscosity of the fluid at the working conditions. In the case of a compressible fluid, it is necessary to know the isentropic exponent of the fluid at the working conditions.

2-4 ORIFICE PLATES

The various types of standard orifice plates are similar and therefore only a single description is needed. Each type of standard orifice meter is characterized by the arrangement of the pressure taps.

All types of orifice plate shall conform to the following description under working conditions. Limits of use are given in para. 2-4.3.1.

2-4.1 Description

The axial plane cross-section of a standard orifice plate is shown in Fig. 2-1. The letters given in the following refer to the corresponding references in Fig. 2-1.

2-4.1.1 General Shape

(a) The part of the plate inside the pipe shall be circular and concentric with the pipe centerline. The faces of the plate shall always be flat and parallel.

(b) Unless otherwise stated, the following requirements apply only to that part of the plate located within the pipe.

(c) Care shall be taken in the design of the orifice plate and its installation to ensure that plastic buckling and elastic deformation of the plate, due to the magnitude of the differential pressure or of any other stress, do not cause the slope of the straight line defined in para. 2-4.1.2(a) to exceed 1% under working conditions.

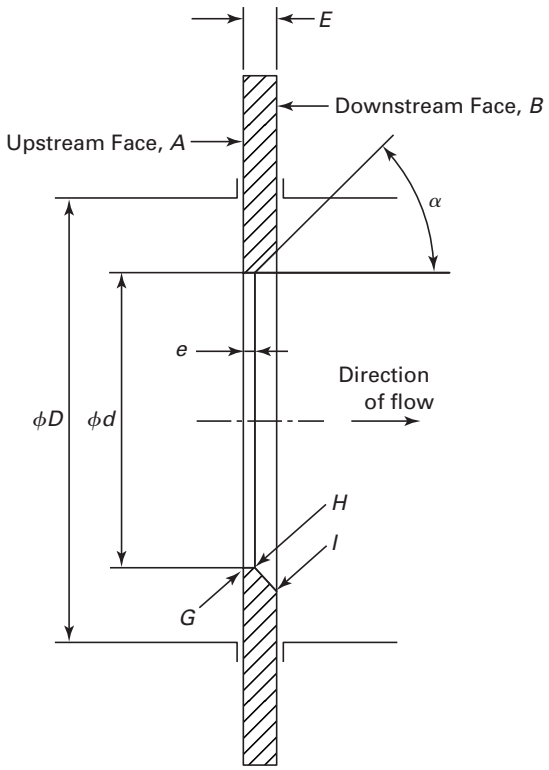

Fig. 2-1 Standard Orifice Plate

Copyright ASME International
Provided by IHS under license with ASME
No reproduction or networking permitted without license from IHS
Not for Resale

2-4.1.2 Upstream Face, *A*

(a) The upstream face, *A*, of the plate shall be flat when the plate is installed in the pipe with zero differential pressure across it. Provided it can be shown that the method of mounting does not distort the plate, this flatness can be measured with the plate removed from the pipe. Under these circumstances, the plate can be considered to be flat when the maximum gap between the plate and a straight edge of length D laid across any diameter of the plate (see Fig. 2-2) is less than $[0.005(D - d)/2]$, i.e., the slope is less than 0.5%, when the orifice plate is examined prior to insertion into the pipeline. As can be seen from Fig. 2-2 the critical area is in the vicinity of the orifice bore. The uncertainty requirements for this dimension can be met using feeler gauges.

(b) The upstream face of the orifice plate shall have a roughness criterion $R_a < 10^{-4}d$ within a circle of diameter not less than D concentric with the orifice bore. If in the working conditions the plate does not fulfill the specified conditions, it shall be polished or cleaned to a diameter of at least D.

(c) Where possible, it is useful to provide a distinctive mark that is visible when the orifice plate is installed to show that the upstream face of the orifice plate is correctly installed relative to the direction of flow.

2-4.1.3 Downstream Face, *B*

(a) The downstream face, *B* shall be flat and parallel with the upstream face [see requirements of para. 2-4.1.4(d)].

(b) Although it may be convenient to manufacture the orifice plate with the same surface finish on each face, it is unnecessary to provide the same high quality finish for the downstream face as for the upstream face (see para. 2-4.1.8).

(c) The flatness and surface condition of the downstream face can be judged by visual inspection.

2-4.1.4 Thickness, *E* and *e*

(a) The thickness, *e*, of the orifice shall be between $0.005D$ and $0.02D$.

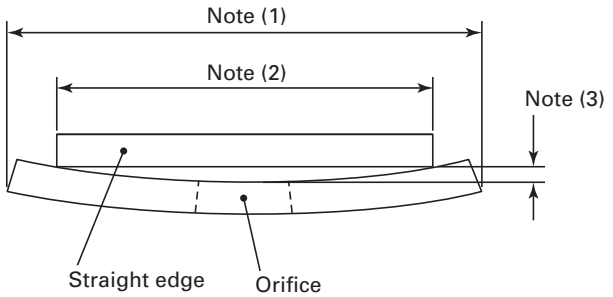

NOTES:
(1) Orifice plate outside diameter.
(2) Pipe inside diameter.
(3) Departure from flatness.

Fig. 2-2 Orifice Plate Flatness Measurement

(b) The difference between the values of *e* measured at any point on the orifice shall not be greater than $0.001D$.

(c) The thickness *E* of the plate shall be between *e* and $0.05D$. When 50 mm $\leq D \leq$ 64 mm (2 in. $\leq D \leq$ 2.5 in.), however, a thickness *E* up to 3.2 mm (0.125 in.) is acceptable. It must also meet the requirements of para. 2-4.1.1(c).

(d) If $D \geq$ 200 mm (7.875 in.), the difference between the values of *E* measured at any point of the plate shall not be greater than $0.001D$. If $D <$ 200 mm (7.875 in.), the difference between the values of *E* measured at any point of the plate shall not be greater than 0.2 mm (0.008 in.).

2-4.1.5 Angle of Bevel, *F*

(a) If the thickness *E* of the plate exceeds the thickness, *e* of the orifice, the plate shall be beveled on the downstream side. The beveled surface shall be finished to a roughness $R_a < 10^{-4}d$.

(b) The angle of bevel, *F* shall be 45 deg ± 15 deg.

2-4.1.6 Edges, *G*, *H*, and *I*

(a) The upstream edge, *G* shall not have wire-edges, burrs, or any peculiarities visible to the naked eye.

(b) The upstream edge, *G* shall be sharp. It is considered so if the edge radius is not greater than $0.0004d$.

If $d \geq$ 25 mm (1 in.), this requirement can generally be considered as satisfied by visual inspection by checking that the edge does not seem to reflect a beam of light when viewed with the naked eye. If $d <$ 25 mm (1 in.), visual inspection is not sufficient. If there is any doubt as to whether this requirement is met, the edge radius shall be measured.

(c) The upstream edge shall be square. It is considered to be so when the angle between the orifice bore and the upstream face of the orifice plate is 90 deg ± 0.3 deg.

(d) The downstream edges, *H* and *I* are within the separated flow region. Consequently, the requirements for their quality are less stringent than those for edge, *G*. This being the case, small defects (e.g., a single nick not crossing the upstream edge) are acceptable.

2-4.1.7 Diameter of Orifice, *d*

(a) The diameter, *d* shall in all cases be greater than or equal to 12.5 mm (0.5 in.). The diameter ratio ($\beta = d/D$) shall be between 0.10 and 0.75. It should be noted, however, that the uncertainty statements given in this Standard favor diameter ratios between 0.20 and 0.60.

(b) The value, *d* of the diameter of the orifice shall be taken as the mean of the measurements of at least four diameters at approximately equal angles to each other. Care shall be taken that the edge and throat are not damaged when making these measurements.

The orifice plate temperature shall be recorded at the time the bore diameter measurements are made. These measurements shall be made under thermally stable conditions: during the measurement, the temperature should be constant within ± 0.5°C (± 1°F). For the purpose of flow calculation, the orifice bore diameter shall be corrected for the temperature difference between the

Copyright ASME International
Provided by IHS under license with ASME
No reproduction or networking permitted without license from IHS
Not for Resale

reference temperature of the bore measurement and the operating temperature under flowing conditions.

(c) The bore shall be cylindrical, concentric, and perpendicular to the upstream face.

No diameter shall differ by more than 0.05% from the value of the mean diameter. In all cases, the roughness of the orifice bore cylindrical section shall not be such that it affects the edge sharpness measurement.

The bore of the orifice plate shall be concentric with the axis of the adjacent pipe. Lack of concentricity is caused by the offset between the center of the bore and the center of the pipe. As stated in para. 2-5.3.3, this Part gives no information by which to predict the value of any additional uncertainty due to lack of concentricity.

2-4.1.8 Bidirectional Plates

(a) If the orifice plate is to be used for measuring reverse flows, the additional requirements of paras. 2-4.1.8(a)(1) through 2-4.1.8(a)(4) shall be fulfilled.

(1) The plate shall not be beveled.

(2) The two faces shall comply with the specifications for the upstream face given in para. 2-4.1.2.

(3) The thickness, E of the plate shall be equal to the thickness, e of the orifice specified in para. 2-4.1.4. Consequently, it may be necessary to limit the differential pressure to prevent plate distortion [see para. 2-4.1.1(c)].

(4) The two edges of the orifice shall comply with the specifications for the upstream edge specified in para. 2-4.1.6.

(b) For orifice plates with D and $D/2$ taps (see para. 2-4.2), two sets of upstream and downstream pressure taps shall be provided and used according to the direction of the flow.

2-4.1.9 Material and Manufacture. The plate can be manufactured from any material and in any way, provided that it is and remains in accordance with the foregoing description during the flow measurements.

2-4.2 Pressure Taps

For each orifice plate, at least one upstream pressure tap and one downstream pressure tap shall be installed in one of the standard locations: D and $D/2$, flange, or corner taps.

A single orifice plate can be used with several sets of pressure taps suitable for different types of standard orifice meters. To avoid interference, multiple taps (either upstream or downstream) shall be offset by at least 30 deg. The location of the pressure taps characterizes the type of orifice meter.

2-4.2.1 Details of Pressure Taps for D and $D/2$ Tap Orifice Meters and Flange Tap Orifice Meters

(a) The spacing, l of a pressure tap is the distance between the centerline of the pressure tap and the plane of a specified face of the orifice plate (see Fig. 2-3). When installing the pressure taps, the thickness of the gaskets and/or sealing material shall be considered.

For orifice plates with D and $D/2$ taps, the spacing, l_1 of the upstream pressure tap is equal to

$$l_1 = D \pm 0.1D$$

The spacing, l_2 of the downstream pressure tap is equal to

(1) $l_2 = 0.5D \pm 0.02D$ for $\beta \leq 0.6$

(2) $l_2 = 0.5D \pm 0.01D$ for $\beta > 0.6$

Both l_1 and l_2 dimensions are measured from the upstream face of the orifice plate.

(b) For orifice plates with flange taps (see Fig. 2-3), the spacing, l_1 of the upstream pressure tap is nominally 25.4 mm (1 in.) and is measured from the upstream face of the orifice plate.

The spacing (l'_2) of the downstream pressure tap is nominally 25.4 mm (1.00 in.) and is measured from the downstream face of the orifice plate.

These upstream and downstream dimensions (l_1 and l'_2) shall be within the following ranges:

(1) 25.4 mm $\pm$ 0.5 mm, for $\beta > 0.6$ and $D < 150$ mm (1.00 in. $\pm$ 0.02 in., for $\beta > 0.6$ and $D < 6$ in.)

(2) 25.4 mm $\pm$ 1 mm, for $\beta \leq 0.6$ or $\beta > 0.6$ and 1000 mm $\leq D \leq$ 150 mm (1.00 in. $\pm$ 0.04 in., for $\beta \leq 0.6$ or $\beta > 0.6$ and 40 in. $\leq D \leq$ 6 in.)

(c) The centerline of the tap shall intersect the pipe centerline at an angle of 90 deg $\pm$ 3 deg.

(d) The hole on the inside wall of the pipe shall be circular. The edges shall be flush with the internal surface of the pipe wall and as sharp as possible. To ensure the elimination of all burrs or wire edges at the inner edge, rounding is permitted, but shall have a radius less than one-tenth of the pressure tap diameter. No irregularity shall appear inside the connecting hole, on the edges of the hole drilled in the pipe wall, or on the pipe wall close to the pressure tap.

(e) Conformity of the pressure taps with the requirements specified in paras. 2-4.2.1(c) and (d) can be judged by visual inspection.

(f) The diameter of pressure taps shall be less than $0.13D$ and less than 13 mm (0.5 in.). No restriction is placed on the minimum diameter, which is determined by the need to prevent blockage and to give satisfactory dynamic performance. The upstream and downstream taps shall have the same diameter.

(g) The pressure taps shall be circular and cylindrical over a length of at least 2.5 times the internal diameter of the tap, measured from the inside wall of the pipe.

(h) The centerlines of the pressure taps can be located in any axial plane of the pipeline.

(i) The axes of the upstream and downstream taps shall be located in the same axial plane.

2-4.2.2 Orifice Plate With Corner Taps

(a) The spacing between the centerlines of the taps and the respective faces of the plate is equal to half the diameter or to half the width of the taps themselves, so that the tap holes break through the wall flush with the faces of the plate [see Fig. 2-4 and para. 2-4.2.2(e)].

Copyright ASME International
Provided by IHS under license with ASME
No reproduction or networking permitted without license from IHS Not for Resale

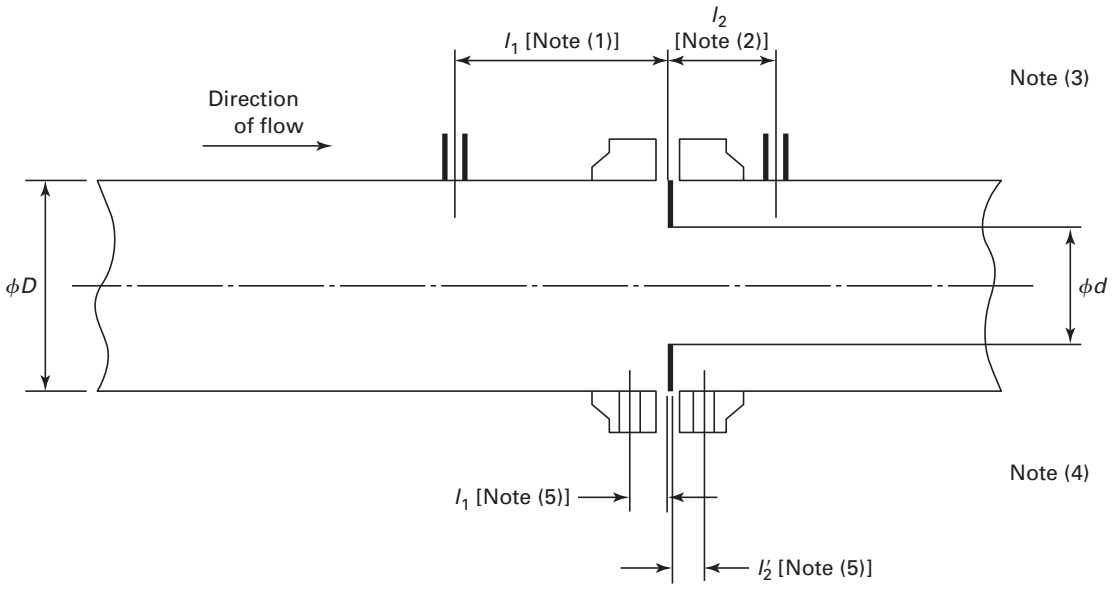

NOTES:
(1) $l_1 = D \pm 0.1D$.
(2) $l_2 = 0.5D \pm 0.02D$ for $\beta > 0.6$.
$= 0.5D \pm 0.01D$ for $\beta > 0.6$.
(3) D and $D/2$ pressure tap arrangement.
(4) Flange tap arrangement.
(5) $l_1 = l_2' =$ 25.4 mm ± 0.5 mm (1.00 in. ± 0.02 in.) for $\beta > 0.6$ and $D <$ 150 mm (6 in.)
= 25.4 mm ± 1 mm (1.00 in. ± 0.04 in.) for $\beta \leq 0.6$
= 25.4 mm ± 1 mm (1.00 in. ± 0.04 in.) for $\beta > 0.6$ and 150 mm $\leq D \leq$ 1000 mm (6 in. $\leq D \leq$ 40 in.)

Fig. 2-3 Spacing of Pressure Taps for Orifice Plates With *D* and *D*/2 Pressure Taps or Flange Taps

(b) The pressure taps can be either single taps or annular slots. Both types of taps can be located either in the pipe or its flanges or in carrier rings as shown in Fig. 2-4.

(c) The diameter of a single tap and the width of annular slots are specified below. The minimum diameter is determined in practice by the need to prevent blockage and to give satisfactory dynamic performance.

For clean fluids and gases

(1) $0.005D \leq a \leq 0.03D$ for $\beta \leq 0.65$

(2) $0.01D \leq a \leq 0.02D$ for $\beta > 0.65$

If $D <$ 100 mm (4 in.), a value of a up to 2 mm (0.08 in) is acceptable for any β.

For any value of β

(3) for clean fluids: 1 mm (0.04 in.) $\leq a \leq$ 10 mm (0.40 in.)

(4) for gases, in the case of annular chambers: 1 mm (0.04 in.) $\leq a \leq$ 10 mm (0.40 in.)

(5) for gases and for liquefied gases, in the case of single taps: 4 mm (0.16 in.) $\leq a \leq$ 10 mm (0.40 in.)

(d) The annular slots shall break through the inside wall of the pipe over the entire perimeter, with no break in continuity. If this is not possible, each annular chamber shall connect with the inside of the pipe by at least four openings, the axes of which are at equal angles to one another and the individual opening area of which is least 12 mm^2 (0.019 in.^{2}).

(e) If individual pressure taps are used, the centerline of the taps shall meet the centerline of the pipe at an angle of 90 deg ± 3 deg.

If there are several discrete pressure taps in the same upstream or downstream plane, their centerlines shall form equal angles to each other. The diameters of individual pressure taps are specified in para. 2-4.2.2(c).

The pressure taps shall be circular and cylindrical over a length of at least 2.5 times the internal diameter of the taps measured from the inner wall of the pipeline. The upstream and downstream pressure taps shall have the same diameter.

(f) The internal diameter, b, of the carrier ring shall be greater than or equal to the diameter, D, of the pipe, to ensure that they do not protrude into the pipe, but shall be less than or equal to $1.04D$. Furthermore, the following condition shall be met:

$$\frac{b - D}{D} \times \frac{c}{D} \times 100 \leq \frac{0.1}{0.1 + 2.3\beta^4} \qquad (2\text{-}3)$$

The lengths, c and c', of the upstream and downstream rings shall not be greater than $0.5D$. The thickness, f, of the slot shall be greater than or equal to twice the width of the annular slot, a. The area of the cross section of the annular chamber, gh, shall be greater than

Copyright ASME International
Provided by IHS under license with ASME
No reproduction or networking permitted without license from IHS
Not for Resale

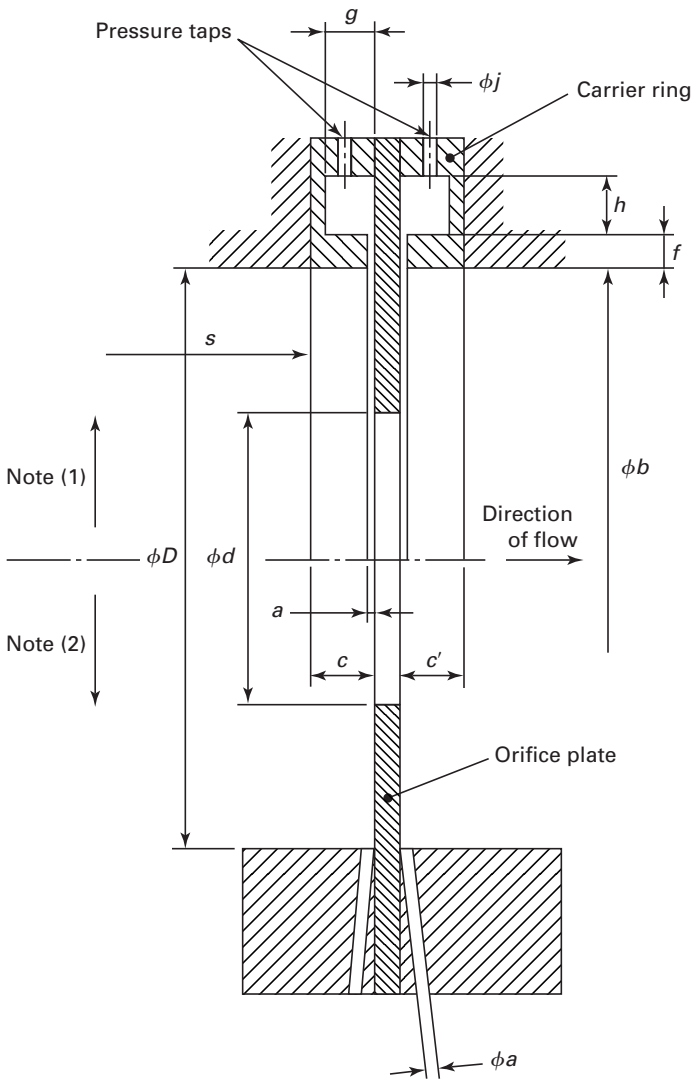

a = width of annular set
ϕa = diameter of sink top
b = inside diameter of carrier ring
c = length of upstream ring
c' = length of downstream ring
f = slot depth
g = annular chamber dimensions
h = annular chamber dimensions
s = distance from upstream step to carrier ring
ϕ_j = chamber tap diameter

NOTES:
(1) Carrier ring with annular slot.
(2) Individual taps.

Fig. 2-4 Corner Taps

--`,,```,,,,````-`-`,,`,,`,`,,`---

Copyright ASME International
Provided by IHS under license with ASME
No reproduction or networking permitted without license from IHS

Not for Resale

Table 2-1 Maximum Value of 10^4 R_a/D

	Pipe Reynolds Number								
β	$\leq 10^4$	3 (10^4)	10^5	3 (10^5)	10^6	3 (10^6)	10^7	3 (10^7)	10^8
≤ 0.20	15	15	15	15	15	15	15	15	15
0.30	15	15	15	15	15	15	15	14	13
0.40	15	15	10	7.2	5.2	4.1	3.5	3.1	2.7
0.50	11	7.7	4.9	3.3	2.2	1.6	1.3	1.1	0.9
0.60	5.6	4.0	2.5	1.6	1.0	0.7	0.6	0.5	0.4
≥ 0.65	4.2	3.0	1.9	1.2	0.6	0.6	0.4	0.3	0.3

or equal to half the total area of the opening connecting this chamber to the inside of the pipe.

(g) All surfaces of the ring that are in contact with the measured fluid shall be clean and shall have a well-machined finish. The surface finish shall meet the pipe roughness requirements (see para. 2-4.3.1).

(h) The pressure taps connecting the annular chambers to the secondary devices are pipe-wall taps, circular at the point of breakthrough and with a diameter, *j*, between 4 mm and 10 mm (0.16 in. and 0.40 in.) [see para. 2-4.2.1(d)].

(i) The upstream and downstream carrier rings need not be identical to each other, but they shall both conform to the preceding requirements.

(j) The diameter of the pipe shall be measured as specified in para. 2-5.4(b), the carrier ring being regarded as part of the primary device. This also applies to the distance requirement given in para. 2-5.4(d) so that *s* shall be measured from the upstream edge of the recess formed by the carrier ring.

2-4.3 Coefficients and Corresponding Uncertainties of Orifice Plates

2-4.3.1 Limits of Use. Standard orifice plates shall only be used in accordance with Part 2 under the following conditions:

(a) For orifice plates with corner or with D and $D/2$ pressure taps

(1) $d \geq 12.5$ mm (0.5 in.)

(2) 50 mm (2 in.) $\leq D \leq$ 1 000 mm (40 in.)

(3) $0.10 \leq \beta \leq 0.75$

(4) $R_D \geq 5000$ for $0.10 \leq \beta \leq 0.56$

(5) $R_D \geq 16000\beta^2$ for $\beta > 0.56$

(b) For orifice plates with flange taps

(1) $d \geq 12.5$ mm (0.5 in.)

(2) 50 mm (2 in.) $\leq D \leq$ 1000 mm (40 in.)

(3) $0.10 \leq \beta \leq 0.75$

(4) $R_D \geq 5000$ and $R_D \geq 170\beta^2 D$, (D, mm)

(5) $R_D \geq 5000$ and $R_D \geq 4318\beta^2 D$, (D, in.)

(c) The pipe internal roughness satisfies the following: the value of the arithmetical mean deviation of the roughness, R_a, must be such that 10^4 R_a/D is less than the maximum value given in Table 2-1 and greater than the minimum value given in Table 2-2.

The discharge coefficient equation (Eq. 2-4) was determined from a database collected using pipes whose roughness is known. The limits on R_a/D were determined so that the shift in discharge coefficient due to using a pipe of a different roughness will not be so great that the uncertainty value in para. 2-4.3.3.1 is no longer met. Information regarding pipe roughness can be found in para. 1-6.1(e) of this Standard.

The roughness shall meet requirements given in Tables 2-1 and 2-2 for 10D upstream of the orifice plate. The roughness requirements relate to the orifice fitting and the upstream pipe work. The downstream roughness is not as critical.

The requirements of this section are satisfied in either of the following cases:

(1) 1 μm (40 μin.) $\leq R_a \leq$ 6 μm (240 μin.), $D \geq$ 150 mm (6 in.), $\beta \leq 0.6$ and $R_D \leq 5$ (10^7)

(2) 1.5 μm (60 μin.) $\leq R_a \leq$ 6 μm (240 μin.), $D \geq$ 150 mm, $\beta > 0.6$ and $R_D \leq 1.5$ (10^7)

When $D <$ 150 mm (6 in.), it is necessary to calculate the maximum and minimum values of R_a using Tables 2-1 and 2-2.

(d) If the line fluid is a gas, the pressure ratio (throat pressure to upstream pressure ratio, P_2/P_1) shall be between 0.80 and 1.00. If the fluid is a liquid, there is no limit to the pressure ratio, provided there is no phase change in the process fluid; the plate does not deflect beyond that allowed in para. 2-4.1.2(a).

(e) The differential pressure does not exceed 250 kPaD (1,005 inches H_2O).

2-4.3.2 Coefficients

2-4.3.2.1 Discharge Coefficient, *C*. The discharge coefficient, C, is given by the Reader-Harris/Gallagher (1998) equation.

Table 2-2 Minimum Value of 10^4 R_a/D (When Required)

	Pipe Reynolds Number			
β	$\leq$ 3 (10^6)	10^7	3 (10^7)	10^8
≤ 0.50	0.0	0.0	0.0	0.0
0.60	0.0	0.0	0.003	0.004
≥ 0.65	0.0	0.013	0.016	0.012

Copyright ASME International
Provided by IHS under license with ASME
No reproduction or networking permitted without license from IHS
Not for Resale

$$C = 0.5961 + 0.0261\beta^2 - 0.216\beta^8 + 0.000521\left(\frac{10^6\beta}{R_D}\right)^{0.7} + (0.0188 + 0.0063A)\beta^{3.5}\left(\frac{10^6}{R_D}\right)^{0.3} + (0.043 + 0.080e^{-10L_1} - 0.123e^{-7L_1})(1 - 0.11A)\frac{\beta^4}{1-\beta^4} - 0.031(M_2' - 0.8M_2'^{1.1})\beta^{1.3} \quad (2\text{-}4)$$

When $D < 71.12$ mm (2.8 in.), the following term shall be added to Eq. (2-4):

(SI Units)

$$+0.011(0.75 - \beta)\left(2.8 - \frac{D}{25.4}\right) \quad (2\text{-}5)$$

(U.S. Customary Units)

$$+0.11(0.75 - \beta)(2.8 - D)$$

where

$\beta = d/D$
= diameter ratio
R_D = pipe Reynolds number
$L_1 = l_1/D$
= quotient of the distance of the upstream tap from the upstream face of the plate and the pipe diameter
$L_2' = l_2'/D$
= quotient of the distance of the downstream tap from the downstream face of the plate, and the pipe diameter (L_2' denotes the reference of the downstream spacing from the downstream face, while L_2 would denote the reference of the downstream spacing from the upstream face)

$$M_2' = \frac{2L_2'}{1-\beta}$$

$$A = \left(\frac{19000\beta}{R_D}\right)^{0.8}$$

The values of L_1 and L_2' to be used in this equation, when the dimensions are in accordance with the requirements of paras. 2-4.2.1(a) and (b) or para. 2-4.2.2 are as follows:

(a) for Corner taps

$$L_1 = L_2' = 0$$

(b) for D and $D/2$ taps

$$L_1 = 1$$
$$L_2' = 0.47$$

(c) for Flange taps

(1) for D, mm: $L_1 = L_2' = (25.4/D)$

(2) for D, in.: $L_1 = L_2' = (1/D)$

Equation (2-4) is valid only for the tap arrangements defined in paras. 2-4.2.1 or 2-4.2.2. It is not permitted to enter into the equation pairs of values of L_1 and L_2' that do not match one of these three tap arrangements.

This equation, as well as the uncertainties given in 2-4.3.3, is only valid when the measurement meets all the limits of use specified in para. 2-4.3.1 and the general installation requirements specified in para. 2-5, and in Part 1 of this Standard.

Values of C in the functions of β, R_D, and D are given for convenience in Tables 2A-1 to 2A-11. These values are not intended for precise interpolation and extrapolation is not permitted.

2-4.3.2.2 Expansibility Factor, $\varepsilon(Y)$. For the three types of tap arrangement, the empirical formula for computing the expansibility factor, $\varepsilon(Y)$, is as follows:

$$\varepsilon = 1 - (0.351 + 0.256\beta^4 + 0.93\beta^8)\left[1 - \left(\frac{P_2}{P_1}\right)^{\frac{1}{\kappa}}\right] \quad (2\text{-}6)$$

Eq. 2-6 is applicable only within the range of the limits of use specified in para. 2-4.3.1 and only if $P_2/P_1 \geq 0.80$.

Test results for the determination of $\varepsilon(Y)$ are only known for air, steam, and natural gas. There is no known objection, however, to using the same formula for other gases for which the isentropic exponent is known.

Values of the expansibility factor as a function of the isentropic exponent, the pressure ratio, and the diameter ratio are given for convenience in Table 2A-12. These values are not intended for precise interpolation and extrapolation is not permitted.

2-4.3.3 Uncertainties

2-4.3.3.1 Uncertainty of Discharge Coefficient, *C*. For all three tapping arrangements, when β, R_D, D, and R_a/D are assumed to be known without error, the relative uncertainty of the value of C is equal to

(a) $\pm$ $(0.7 - \beta)$% for $0.1 \leq \beta < 0.2$
(b) $\pm$ 0.5% for $0.2 \leq \beta \leq 0.6$
(c) $\pm$ $(1.667\beta - 0.5)$% for $0.6 < \beta \leq 0.75$

Where $D < 71.12$ mm (2.8 in.), the following relative uncertainty shall be added to the above values:

(SI Units)

$$\pm\ 0.9(0.75 - \beta)\left(2.8 - \frac{D}{25.4}\right)\% \quad (2\text{-}7)$$

(U.S. Customary Units)

$$\pm\ 0.9(0.75 - \beta)(2.8 - D)\%$$

Where $\beta > 0.5$ and $R_D < 10\,000$, 0.5% shall be added to the above values.

2-4.3.3.2 Uncertainty of Expansibility Factor, $\varepsilon(Y)$. When β, $\Delta p/p_1$, and κ are assumed to be known without error, the relative uncertainty, %, of the value of $\varepsilon(Y)$ is equal to

(SI Units)

$$\pm\ 3.5\ \frac{\Delta p}{\kappa p_1}\ \% \quad (2\text{-}8)$$

(U.S. Customary Units)

$$\pm\ 3.5\ \frac{0.03606 h_w}{\kappa p_1}\ \%$$

Copyright ASME International
Provided by IHS under license with ASME
No reproduction or networking permitted without license from IHS Not for Resale

2-4.4 Pressure Loss, $\Delta\varpi\,(h)$

(a) The pressure loss, $\Delta\varpi\,(h)$, for the orifice plates described in Part 2 is approximately related to the differential pressure $\Delta p\,(h_w)$ by the following equation:

(SI Units)

$$\Delta\varpi = \frac{\sqrt{1-\beta^4(1-C^2)}-C\beta^2}{\sqrt{1-\beta^4(1-C^2)}+C\beta^2}\,\Delta p \qquad (2\text{-}9)$$

(U.S. Customary Units)

$$h = \frac{\sqrt{1-\beta^4(1-C^2)}-C\beta^2}{\sqrt{1-\beta^4(1-C^2)}+C\beta^2}\,(0.03606h_w)$$

This pressure loss is the difference in static pressure between the pressure measured at the wall on the upstream side of the orifice plate at a section where the influence of the approach impact pressure adjacent to the plate is still negligible (approximately 1D upstream of the orifice plate) and that measured on the downstream side of the orifice plate where the static pressure recovery by expansion of the jet may be considered as just completed (approximately 6D downstream of the orifice plate).

(b) Another approximate value of $\Delta\varpi/\Delta p\,(h/h_w)$ is $1-\beta^{1.9}$.

(c) The pressure loss coefficient, K, for the orifice plate is

$$K = \left[\frac{\sqrt{1-\beta^4(1-C^2)}}{C\beta^2}-1\right]^2 \qquad (2\text{-}10)$$

where K is defined by the following Eq. (2-11):

(SI Units)

$$K = \frac{\Delta\varpi}{\frac{1}{2}\rho_1 V_1{}^2} \qquad (2\text{-}11)$$

(U.S. Customary Units)

$$K = \frac{h}{\frac{1}{2}\rho_1 V_1{}^2}$$

2-5 INSTALLATION REQUIREMENTS

2-5.1 General

General installation requirements for pressure differential devices are contained in para. 1-6 of this Standard and shall be followed in conjunction with the additional installation requirements for nozzles and venturi nozzles given in this section. The general requirements for flow conditions at the primary device are given in para. 1-6.3 of this Standard. The requirements for use of a flow conditioner are given in para. 1-6.4 of this Standard. For some commonly used fittings shown in Table 2-3, the minimum straight lengths of pipe indicated can be used. Detailed requirements are given in para. 2-5.2. A flow conditioner (as in para. 2-5.3), however, will permit the use of a shorter upstream pipe length. Furthermore, a flow conditioner must be installed upstream of the orifice plate where sufficient straight length to achieve the desired level of uncertainty is not available. Downstream of a header, the use of a flow conditioner is strongly recommended.

2-5.2 Minimum Upstream and Downstream Straight Pipe Requirements

(a) The minimum straight lengths of pipe to be installed upstream and downstream of the orifice plate for various fittings in the installation without flow conditioners are given in Table 2-3.

(b) When a flow conditioner is not used, the lengths specified in Table 2-3 must be regarded as the minimum values. For research and calibration work, it is recommended that the upstream values specified in Table 2-3 be increased as much as reasonably possible.

(c) When the straight lengths used are equal to or longer than the values specified in each Column A and General Note (d) of Table 2-3 for "zero additional uncertainty," it is not necessary to increase the uncertainty in discharge coefficient to take account of the effect of the particular installation. Although termed "uncertainty" in this instance, using upstream lengths shorter than those given in each Column A of Table 2-3 will result in flow measurement bias errors. Furthermore, orientation of the pressure taps with respect to the various fittings can affect the magnitude of the bias error.

(d) For a given fitting, when the upstream straight length is greater than or equal to the "0.5% Additional Uncertainty" value shown in each Column B of Table 2-3 and/or shorter than the value corresponding to "Zero Additional Uncertainty" (as shown in each Column A), an additional uncertainty of 0.5% shall be added arithmetically to the uncertainty in the discharge coefficient. As detailed in para. 2-5.2(c), although termed *uncertainty* in this instance, when using upstream straight length greater than or equal to the value shown in each Column B of Table 2-3 and shorter than the value corresponding to shown in each Column A of Table 2-3, a flow measurement bias error less than 0.5% will be introduced. Since both the direction (positive or negative) and the magnitude of this error are specific to the installation in question, this Standard addresses this unknown bias error as an increase in the uncertainty band.

(e) Part 2 of this Standard cannot be used to predict the value of any additional uncertainty when the upstream straight length is shorter than the "0.5% Additional Uncertainty" values specified in each column B of Table 2-3, or when both the upstream and downstream straight lengths are shorter than the "Zero Additional Uncertainty" values specified in each Column A of Table 2-3 are used.

(f) The valves included in Table 2-3 shall be fully open during the flow measurement process. It is recommended that control of the flow rate be achieved by valves located downstream of the orifice plate. Isolating

Copyright ASME International
Provided by IHS under license with ASME
No reproduction or networking permitted without license from IHS

Not for Resale

Table 2-3 Required Straight Lengths Between Orifice Plates and Fittings Without Flow Conditioners

Diameter Ratio β	Upstream (Inlet) Side of Orifice Plate: Single 90 deg Bend, Two 90 deg Bends in Any Plane ($S > 30D$) [Note (1)]		Two 90 deg Bends in Same Plane: S-Configuration ($30D \geq S > 10D$) [Note (1)]		Two 90 deg Bends in Same Plane: S-Configuration ($10D \geq S$) [Note (1)]		Two 90 deg Bends in Perpendicular Planes ($30D \geq S \geq 5D$) [Note (1)]		Two 90 deg Bends in Perpendicular Planes ($5D < S$) [Notes (1,2)]		Single 90 deg Tee With or Without Extension Mitre 90 deg Bend		Single 45 deg Bend, Two 45 deg Bends in Same Plane: S-Configuration ($S \geq 2D$) [Note (1)]		Concentric Reducer $2D$ to D Over Length of $1.5D$ to $3D$		Concentric Expander $0.5D$ to D Over Length of D to $2D$		Full Bore Ball Valve or Gate Valve Fully Open		Abrupt Symmetrical Reduction		Thermometer Pocket or Well of Diameter $\leq 0.03D$ [Notes (3,4)]		Downstream (outlet) Side of the Orifice Plate: Fittings (Columns 2 to 11) and Densitometer Pocket	
1	2		3		4		5		6		7		8		9		10		11		12		13		14	
...	A	B	A	B	A	B	A	B	A	B	A	B	A	B	A	B	A	B	A	B	A	B	A	B	A	B
≤ 0.20	6	3	10	Note (5)	10	Note (5)	19	18	34	17	3	Note (5)	7	Note (5)	5	Note (5)	6	Note (5)	12	6	30	15	5	3	4	2
0.40	16	3	10	Note (5)	10	Note (5)	44	18	50	25	Note (5)	3	30	Note (5)	5	Note (5)	12	8	12	6	30	15	5	3	6	3
0.50	22	9	18	10	22	10	44	18	75	34	19	9	30	18	8	5	20	9	12	6	30	15	5	3	6	3
0.60	42	13	30	18	42	18	44	18	65 (6)	25	29	18	30	18	9	5	26	11	14	7	30	15	5	3	7	3.5
0.67	44	20	44	18	44	20	44	20	60	18	36	18	44	18	12	6	28	14	18	9	30	15	5	3	7	3.5
0.75	44	20	44	18	44	22	44	20	75	18	44	18	44	18	13	8	36	18	24	12	30	15	5	3	8	4

GENERAL NOTES:

(a) Values expressed as multiples of internal diameter, D.

(b) The minimum straight lengths required are the lengths between various fittings located upstream or downstream of the orifice plate and the orifice plate itself. Straight lengths shall be measured from the downstream end of the curved portion of the nearest (or only) bend or of the tee or the downstream end of the curved or conical portion of the reducer or the expander.

(c) Most of the bends on which the lengths in this table are based had a radius of curvature equal to $1.5D$.

(d) Column A for each fitting gives lengths corresponding to "zero additional uncertainty" values [see para. 2-5.2(c)].

(e) Column B for each fitting gives lengths corresponding to "0.5% additional uncertainty" values [see para. 2-5.2(d)].

NOTES:

(1) S is the separation between the two bands measured from the downstream end of the curved portion of the upstream bend to the upstream end of the curved portion of the downstream bend.

(2) This is not a good upstream installation; a flow conditioner should be used where possible.

(3) The installation of thermometer pockets or wells will not alter the required minimum upstream straight lengths for the other fittings.

(4) A thermometer pocket or well of diameter between $0.03D$ and $0.13D$ may be installed provided that the values in each Column A and B are increased to 20 and 10 respectively. Such an installation is not, however, recommended.

(5) The straight length in each Column A gives zero additional uncertainty; data are not available for shorter straight lengths which could be used to give the required straight lengths for each Column B.

(6) $95D$ is required for $Re_D \times 10^6$ if $S < 2D$.

Copyright ASME International
Provided by IHS under license with ASME
No reproduction or networking permitted without license from IHS
Not for Resale

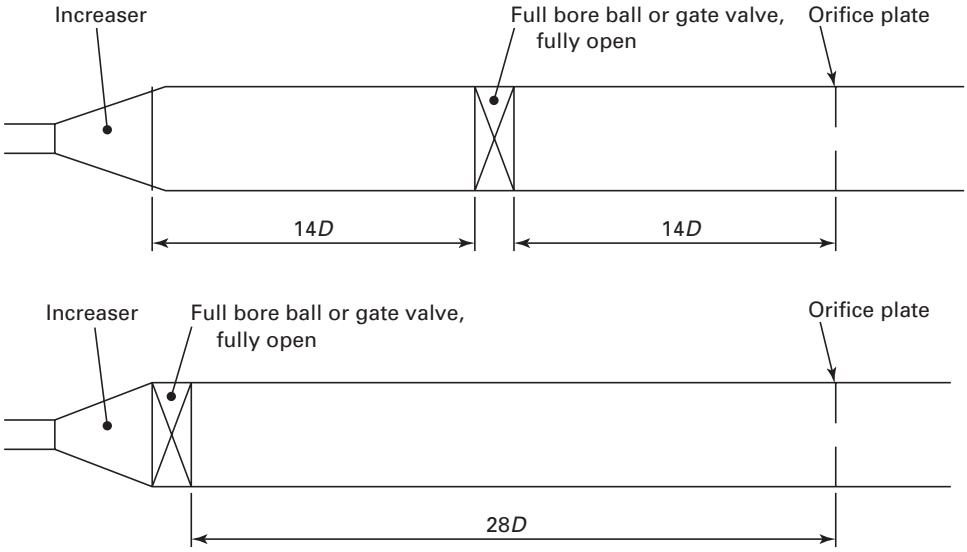

Fig. 2-5 Layout Including a Full Bore Valve for $\beta = 0.6$

valves located upstream of the orifice plate shall be fully open, and these valves must be full bore. The valve should be fitted with stops for alignment of the ball or gate in the open position.

(g) Upstream valves that are bored to match the inside diameter of the adjacent pipe and are designed in such a manner that in the fully opened condition there are no steps, can be regarded as part of the upstream pipe length and do not need to have added lengths as in Table 2-3. Other valves should not be included upstream of the orifice plate. It is recommended that control of the flow rate be achieved by valves located downstream of the orifice plate.

(h) The values given in Table 2-3 were determined experimentally with fully developed and swirl-free flow upstream of the subject fitting. Since in practice such conditions are difficult to achieve, the following information can be used as a guide for normal installation practice.

(1) If several fittings of the type covered by Table 2-3 (other than the combinations of 90 deg bends already covered by this Table) are placed in series upstream of the orifice plate, the following paragraphs shall apply.

(a) Between the fitting immediately upstream of the orifice plate (Fitting 1) and the orifice plate itself, there shall be a straight length at least equal to the minimum length given in Table 2-3 appropriate for the specific orifice plate diameter ratio in conjunction with Fitting 1.

(b) Between Fitting 1 and the next fitting further upstream (Fitting 2), a minimum straight length equal to the product of the diameter of the pipe between Fitting 1 and Fitting 2 and the number of diameters given in Table 2-3 for an orifice plate of diameter ratio 0.67 used in conjunction with Fitting 2 shall be included between Fittings 1 and 2, irrespective of the actual β for the orifice plate used. If either of the minimum straight lengths is selected from Column B, a 0.5% additional uncertainty shall be added arithmetically to the discharge coefficient uncertainty.

(c) If the upstream metering section has a full bore valve preceded by another fitting, then the valve can be installed at the outlet of the Fitting 2 from the orifice plate. The length between the valve and the Fitting 2 shall be added to the length between the orifice plate and the Fitting 1, specified in Table 2-3 (see also Fig. 2-5). Paragraph 2-5.2(h)(3) must also be satisfied (as it is in Fig. 2-5).

(2) In addition to the rule in para. 2-5.2(h)(1), a given fitting (treating any two consecutive 90 deg bends as a single fitting) must be located at a distance from the orifice plate at least as great as that given in Table 2-3. This is regardless of the number of fittings between the fitting in question and the orifice plate.

The distance between the orifice plate and the fitting shall be measured along the pipe axis. If the distance meets this requirement using the number of diameters in each Column B but not that in each Column A, then a 0.5% additional uncertainty shall be added arithmetically to the discharge coefficient uncertainty. This additional uncertainty shall not be added more than once under the provisions of this paragraph and para. 2-5.2(h)(1).

(3) It is strongly recommended that a flow conditioner (see para. 1-6.4 of this Standard) be installed downstream of a metering system header (i.e., one whose cross section area is approximately equal to 1.5 times the cross sectional area of the operating flow meter tubes) since there will always be distortion of the flow profile and a high probability of swirl. When the second (or more distant) fitting from the orifice is a combination of bends, then in applying Table 2-3 the separation between the bends is calculated as a multiple of the diameter of the bends themselves.

Copyright ASME International
Provided by IHS under license with ASME
No reproduction or networking permitted without license from IHS

Not for Resale

(i) Two cases of the application of paras. 2-5.2(h)(1) and 2-5.2(h)(2) are considered. In each case, the second fitting from the orifice plate is a two-bend combination in perpendicular planes (the separation between the bends is ten times the diameter of the bends) and the orifice plate has diameter ratio 0.4.

(1) If the first fitting is a full bore ball valve fully open (see Fig. 2-6a), the distance between the valve and the orifice plate must be at least 12D (from Table 2-3). Furthermore, between the two-bend combination in perpendicular planes and the valve, there must be at least 22D [from para. 2-5.2(h)(1)], and the distance between the two-bend combination in perpendicular planes and the orifice plate, there must be at least 44D [from para. 2-5.2(h)(2)]. If the valve has a laying length of 1D, an additional length of 9D is required. This length can be upstream, downstream, or partly upstream and partly downstream of the valve. Paragraph 2-5.2(h)(1)(c) could also be used to move the valve to be adjacent to the two-bend combination in perpendicular planes, provided that there is at least 44D from the two-bend combination in perpendicular planes to the orifice plate (see Fig. 2-6, sketch (b)).

(2) If the first fitting is a reducer from 2D to D over a length of 2D (see Fig. 2-6, sketch (c), the distance between the reducer and the orifice plate must be at least 5D (from Table 2-3) and that between the two-bend combination in perpendicular planes and the reducer must be at least $22 \times 2D$ [from para. 2-5.2(h)(1)]; the distance between the two-bend combination in perpendicular planes and the orifice plate must be at least 44D [from para. 2-5.2(h)(2)]. So no additional length is required because of para. 2-5.2(h)(3).

(3) If the first fitting is an increaser from 0.5D to D over a length of 2D (see Fig. 2-6, sketch (d)), the distance between the increaser and the orifice plate must be at least 12D (from Table 2-3). Furthermore, between the two-bend combination in perpendicular planes and the increaser, there must be at least $22 \times 0.5D$ [from para. 2-5.2(h)(1)], and the distance between the two-bend combination in perpendicular planes and the orifice plate must be at least 44D [from para. 2-5.2(h)(2)]. So an additional length of 19D is required. This length can be upstream, downstream, or partly upstream and partly downstream of the expander.

2-5.3 Flow Conditioners

2-5.3.1 General. A flow conditioner can be used to reduce upstream straight lengths. See paras. 1-6.4.1 and 1-6.4.2 of this Standard for additional information.

Paragraphs 2-5.3.2 and 2-5.3.3 give the situations in which the 19-tube bundle flow straightener and the Zanker flow conditioner plate can be used upstream of orifice plates. Paragraphs 2-5.3.2.2 and 2-5.3.2.3 describe the situations in which the 19-tube bundle flow straightener and the Zanker flow conditioner plate can be used downstream of any fitting. Paragraph 2-5.3.2.3 describes some additional situations in which the 19-tube bundle flow straightener can be used to reduce the required upstream length. Nonmandatory Appendix 2B describes some flow conditioners that can be used upstream of orifice plates and the requirements for straight pipe lengths associated with them. It is not intended that the inclusion of the flow conditioners described there limit the use of other flow conditioner designs that have been tested and proved to provide sufficiently small shifts in discharge coefficient.

2-5.3.2 The 19-Tube Bundle Flow Straightener

2-5.3.2.1 Description

2-5.3.2.1.1 Design. The 19-tube bundle flow straightener shall consist of nineteen (19) tubes arranged in a cylindrical pattern as shown in Fig. 2-7.

In order to reduce the swirl that can occur between the exterior tubes of the tube bundle flow straightener and the wall of the pipe, the maximum outside diameter of the flow straightener, D_f, must satisfy $0.95D \leq D_f \leq D$. The length, L, of the tubes shall be between 2D and 3D, preferably as close to 2D as possible.

2-5.3.2.1.2 Tubing of the 19-Tube Bundle Flow Straightener. It is necessary for all the tubes in the tube bundle to be of uniform smoothness, outer diameter and wall thickness. The individual tube wall thickness of the 19-tube bundle flow straightener shall be thin. All tubes shall have an internal chamfer on both ends. The wall thickness shall be less than 0.025D; this value is based on the wall thickness of the tubes used to collect the data on which Part 2 is based.

2-5.3.2.1.3 Fabrication of the 19-Tube Bundle Flow Straightener. The 19-tube bundle flow straightener must be fabricated to withstand the loads to which it will be subjected. Individual tubes should be welded together at the points of contact, at least at both ends of the tube bundle. It is important to ensure that the tubes are parallel to each other and to the pipe axis since, if this requirement is not adhered to, the straightener itself can introduce swirl into the flow. Centering spacers can be provided on the outside of the assembly to assist the installer in centering the device in the pipe; these can take the form of small lugs or small rods parallel to the pipe axis. After being inserted in the pipe, the tube bundle shall be securely fastened in place. Secure fastening, however, must not distort the tube bundle assembly with respect to symmetry within the pipe.

2-5.3.2.1.4 Pressure Loss. The pressure loss coefficient, K, for the 19-tube bundle flow straightener is approximately equal to 0.75, where K is given by Eq. (2-12):

$$K = \frac{\Delta p_c}{\frac{1}{2}\rho V^2} \tag{2-12}$$

where

Δp_c = pressure loss across the 19-tube bundle flow straightener
V = mean axial velocity of the fluid in the pipe
ρ = the fluid density.

All units must be consistent.

--`,,```,,,,````-`-`,,`,,`,`,,`---
Copyright ASME International
Provided by IHS under license with ASME
No reproduction or networking permitted without license from IHS
Not for Resale

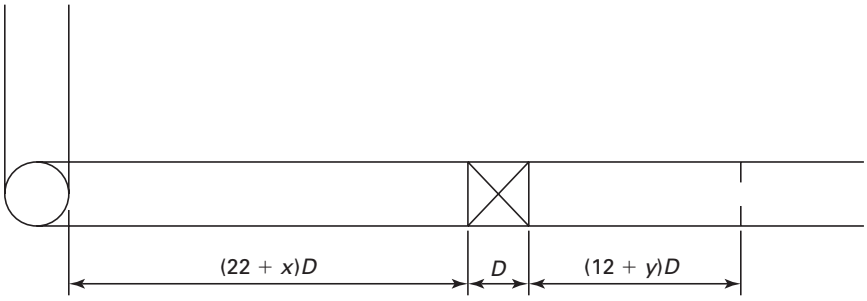

(a) $x \geq 0$, $y \geq 0$, $x + y \geq 9$

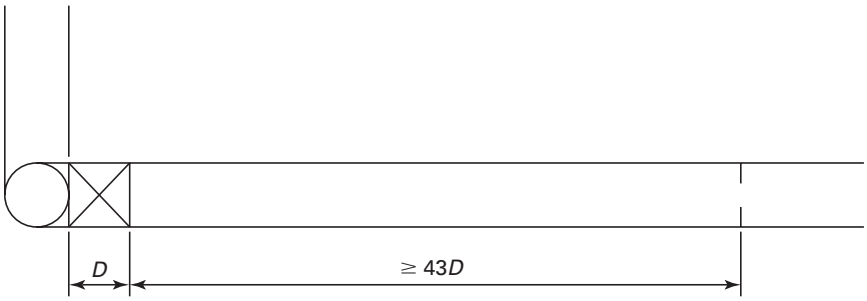

(b)

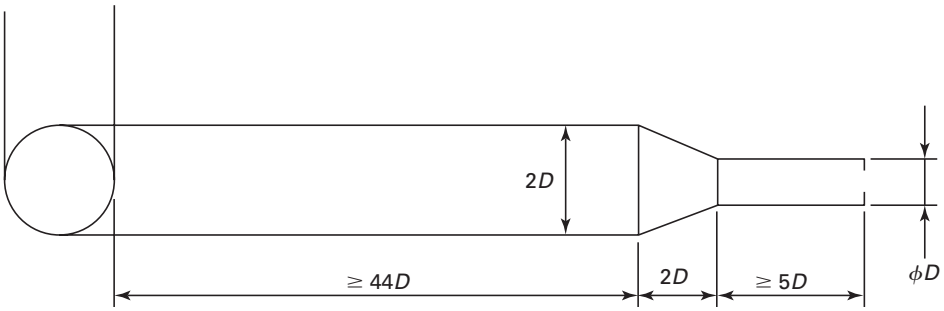

(c)

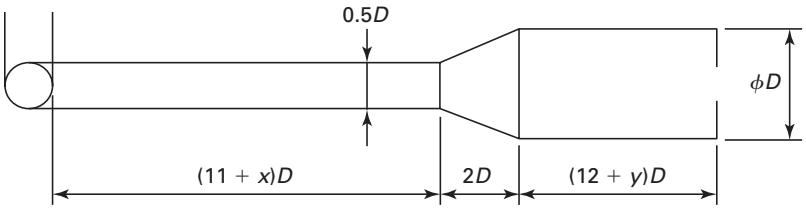

(d) $x \geq 0$, $y \geq 0$, $x + y \geq 19$

Fig. 2-6 Examples of Acceptable Installations

Copyright ASME International
Provided by IHS under license with ASME
No reproduction or networking permitted without license from IHS

Not for Resale

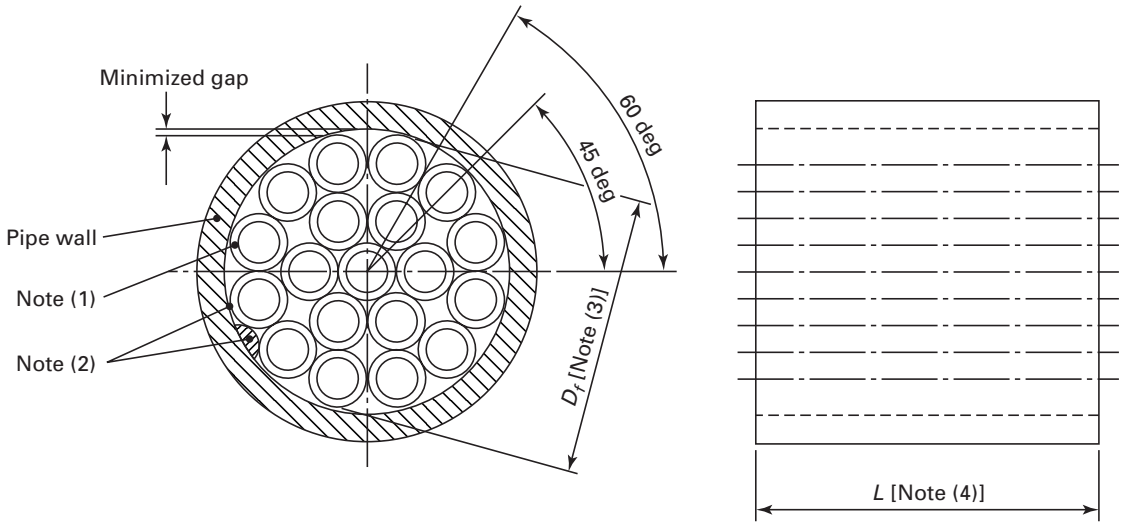

NOTES:
(1) Tube wall thickness, $< 0.025D$.
(2) Centering spacer options, typically four locations.
(3) $D_f =$ flow straightener outside diameter, $0.95 \leq D_f \leq D$.
(4) Length, L, of the tubes, $2D \leq L \leq 3D$, as close to $2D$ as possible.

Fig. 2-7 19-Tube Bundle Flow Straightener

2-5.3.2.2 Installation Downstream of Any Fitting

(a) The 19-tube bundle flow straightener shown in Fig. 2-7 can be used downstream of any upstream fitting with an orifice plate whose diameter ratio is 0.67 or smaller provided that it meets the manufacturing specification in para. 2-5.3.2.1 and is installed in accordance with para. 2-5.3.2.2(b).

(b) The 19-tube bundle flow straightener shall be installed so that there is at least $30D$ between the orifice plate and the upstream fitting. The 19-tube bundle flow straightener shall be installed so that the distance between the downstream end of the 19-tube bundle flow straightener and the orifice plate is equal to $13D \pm 0.25D$.

2-5.3.2.3 Additional Options

(a) A 19-tube bundle flow straightener can also be used to reduce the required upstream straight length in situations outside the situation described in para. 2-5.3.2.2. The 19-tube bundle flow straightener shall be as described in para. 2-5.3.2.1.

The permissible locations for the 19-tube bundle flow straightener depend on L_f, the distance from the orifice plate to the nearest upstream fitting, measured to the downstream end of the curved portion of the nearest (or only) bend or of the tee or the downstream end of the conical portion of the reducer or expander.

Table 2-4 provides the allowable location range and the recommended location for the 19-tube bundle flow straightener for two ranges of L_f:

(1) $30D > L_f \geq 18D$

(2) $L_f \geq 30D$

L_f must be greater than or equal to $18D$. The locations for the 19-tube bundle flow straightener are described in Table 2-4 in terms of the straight lengths between the downstream end of the 19-tube bundle flow straightener and the orifice plate.

If, for a given upstream fitting, orifice plate diameter ratio, and value of L_f, there is no location shown in Table 2-4 for a 19-tube bundle flow straightener, an installation with this fitting, β, and L_f is not recommended: an increase in L_f and/or a reduction in β is necessary.

The length required downstream of the orifice plate shall be as given in Table 2-3. An example of the use of Table 2-4 is given in para. 2-5.3.2.4.

(b) When the straight length between the orifice plate and the 19-tube bundle flow straightener is in accordance with the values specified in each column A of Table 2-4, and the downstream straight length is in accordance with each column A of Table 2-3 for "zero additional uncertainty," it is not necessary to increase the uncertainty in discharge coefficient to take account of the effect of the particular installation.

(c) For a given fitting, an additional uncertainty of 0.5% shall be added arithmetically to the uncertainty in the discharge coefficient when either paras. 2-5.3.2.3(c)(1) or 2-5.3.2.3(c)(2) apply.

(1) The straight length between the orifice plate and the 19-tube bundle flow straightener is not in accordance with the value corresponding to "Zero Additional Uncertainty" shown in each Column A, but is in accordance with the value corresponding to

Copyright ASME International
Provided by IHS under license with ASME
No reproduction or networking permitted without license from IHS Not for Resale

Copyright ASME International
Provided by IHS under license with ASME
No reproduction or networking permitted without license from IHS

Not for Resale

Table 2-4 Permitted Range of Straight Lengths Between Orifice Plate and 19-Tube Bundle Flow Straightener (1998) Downstream of Fittings Located at a Distance, L_f, From the Orifice Plate

Diameter Ratio, β	Single 90 deg Bend [Note (1)]				Two 90 deg Bends in Perpendicular Plates ($2D \geq S$) [Notes (1),(2)]				Single 90 deg Tee				Any Fitting			
	$30 > L_f \geq 18$		$L_f \geq 30$		$30 > L_f \geq 18$		$L_f \geq 30$		$30 > L_f \geq 18$		$L_f \geq 30$		$30 > L_f \geq 18$		$L_f \geq 30$	
1	2	3	4	5	6	7	8	9								
—	A	B	A	B	A	B	A	B	A	B	A	B	A	B	A	B
≤ 0.2	5 to 14.5	1 to n (3)	5 to 25	1 to n (3)	5 to 14.5	1 to n (3)	5 to 25	1 to n (3)	5 to 14.5	1 to n (3)	1 to 25	1 to n (3)	5 to 11	1 to n (3)	5 to 13	1 to n (3)
0.4	5 to 14.5	1 to n (3)	5 to 25	1 to n (3)	5 to 14.5	1 to n (3)	5 to 25	1 to n (3)	5 to 14.5	1 to n (3)	1 to 25	1 to n (3)	5 to 11	1 to n (3)	5 to 13	1 to n (3)
0.5	11.5 to 14.5	3 to n (3)	11.5 to 25	3 to n (3)	9.5 to 14.5	1 to n (3)	9 to 25	1 to n (3)	11 to 13	1 to n (3)	9 to 23	1 to n (3)	Notes (4,5)	3 to n (3)	11.5 to 14.5	3 to n (3)
0.6	12 to 13	5 to n (3)	12 to 25	5 to n (3)	13.5 to 14.5	6 to n (3)	9 to 25	1 to n (3)	Notes (4,6)	7 to n (3)	11 to 16	1 to n (3)	Note (4)	7 to n (3)	12 to 16	6 to n (3)
0.67	13	7 to n (3)	13 to 16.5	7 to n (3)	13 to 14.5	7 to n (3)	10 to 16	5 to n (3)	Note (4)	8 to n (3)	11 to 13	6 to n (3)	Note (4)	8 to 10	13	7 to $n-1.5$ (3)
0.75	14	8 to n (3)	14 to 16.5	8 to n (3)	Note (4)	9.5 to n (3)	12 to 12.5	8 to n (3)	Note (4)	9 to n (3)	12 to 14	7 to n (3)	Note (4)	9.5	Note (4)	8 to 22
Recommended	13 for $\beta \leq$ 0.67	13 for $\beta \leq$ 0.75	14 to 16.5 for $\beta \leq 0.75$	14 to 16.5 for $\beta \leq 0.75$	13.5 to 14.5 for $\beta \leq 0.67$	13.5 to 14.5 for $\beta \leq 0.75$	12 to 12.5 for $\beta \leq 0.75$	12 to 12.5 for $\beta \leq 0.75$	13 for $\beta \leq 0.54$	13 for $\beta \leq 0.75$	12 to 13 for $\beta \leq 0.75$	12 to 13 for $\beta \leq 0.75$	9.5 for $\beta \leq 0.46$	9.5 for $\beta \leq 0.75$	13 for $\beta \leq 0.67$	13 for $\beta \leq$ 0.75

GENERAL NOTES:

(a) Values expressed as multiples of internal diameter, D.

(b) The straight lengths given in the table are the permitted lengths between the downstream end of a 19-tube bundle flow straightener (1998) (as described in para. 2-5.3.2.3) and the orifice plate given that a particular sitting is installed upstream of the 19-tube bundle flow straightener (1998) at a distance L_f from the orifice plate. The distance L_f from the orifice plate is measured to the downstream end of the curved portion of the nearest (or only) bend or of the tee or the downstream end of the curved or conical portion of the reducer or expander. The recommended values give tube bundle locations that are applicable over a specified range of β.

(c) Column A for each fitting gives lengths corresponding to “zero additional uncertainty” values (see para. 2-5.3.2.3(b)).

(d) Column B for each fitting gives lengths corresponding to “0.5% additional uncertainty” values (see para. 2-5.3.2.3(c)).

NOTES:

(1) Bends should have a radius of curvature equal to 1.50.

(2) S is the separation between the two bends measured from the downstream end of the curved portion of the upstream bend to the upstream end of the curved portion of the downstream bend.

(3) n is the number of diameters such that the upstream end of the 19-tube bundle flow straightener (1998) is situated $1D$ from the downstream end of the curved or conical portion of the nearest fitting. It is desirable that the length between the upstream end of the 19-tube bundle flow straightener (1998) and the downstream end of the curved or conical portion of the nearest fitting should be at least $2.5D$, except where this would not give an acceptable value for the distance between the orifice plate and the downstream end of the 19-tube bundle flow straightener (1998).

(4) It is not possible to find an acceptable location for a 19-tube bundle flow straightener (1998) downstream of the particular fitting for all values of L_f to which the column applies.

(5) If $\beta = 0.46$ a value of 9.5 is possible.

(6) If $\beta = 0.54$ a value of 13 is possible.

"0.5% Additional Uncertainty" shown in each column B of Table 2-4.

(2) The downstream straight length is shorter than the value corresponding to "Zero Additional Uncertainty" shown in each Column A, but is either equal to or greater than the "0.5% Additional Uncertainty" value shown in each Column B of Table 2-3.

(d) Part 2 cannot be used to predict the value of any additional uncertainty when

(1) the straight length between orifice plate and 19-tube bundle flow straightener is not in accordance with the value corresponding to "0.5% Additional Uncertainty" shown in each Column B of Table 2-4.

(2) the downstream straight length is shorter than the "0.5% Additional Uncertainty" value specified in each Column B of Table 2-3.

(3) both the straight length between orifice plate and 19-tube bundle flow straightener is not in accordance with the value corresponding to "Zero Additional Uncertainty" shown in each Column A of Table 2-4 and the downstream straight length is shorter than the "Zero Additional Uncertainty" value specified in each Column A of Table 2-3.

(e) In the metering system, upstream valves that are bored to match the adjacent pipe and are designed in such a manner that in the fully opened condition there are no steps, can be regarded as part of the metering pipe length and do not need to be regarded as an upstream fitting, provided that when flow is being measured they are fully open. It is recommended that control of the flow rate be achieved by valves located downstream of the orifice plate.

(f) The values given in Table 2-3 were determined experimentally with fully developed and swirl-free flow upstream of the subject fitting. Since in practice such conditions are difficult to achieve, there shall be at least 15*D* of straight pipe between the fitting listed in Table 2-4 and the nearest fitting beyond that one, unless the columns relating to any fitting are used.

2-5.3.2.4 Example. If it is necessary to install a single bend upstream of an orifice plate of diameter ratio 0.6, there are two options using a 19-tube bundle flow straightener that will reduce the upstream length in comparison to the 44*D* required (see Table 2-3) if no flow conditioner is used. One approach is to permit an installation as in para. 2-5.3.2.2(b) (see Fig. 2-8, sketch (a)), which has the advantage that any fitting can be placed at any distance upstream of the single bend. Alternately, an installation as in Table 2-4 is permissible (see Fig. 2-8, sketch (b)), which gives a shorter straight length required down-

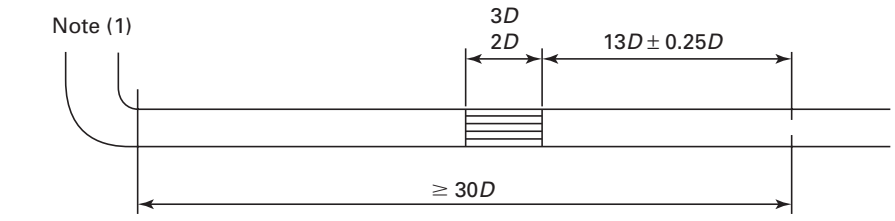

(a) Using Para. 2-5.3.2.2(b)

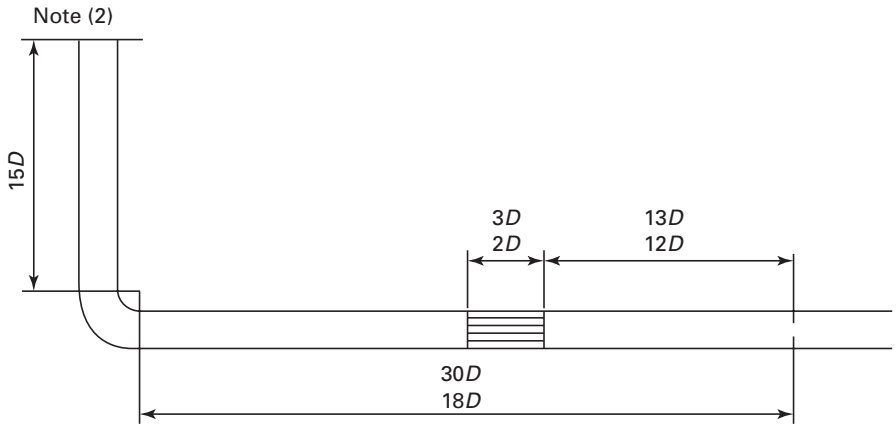

(b) Using Table 2-4

NOTES:
(1) Position of any fitting placed at any distance upstream of the single bend.
(2) Position of previous fitting placed before straight length upstream of the single bend.

Fig. 2-8 Examples of Installations With a 19-Tube Bundle Flow Straightener Downstream of a Single Bend

Copyright ASME International
Provided by IHS under license with ASME
No reproduction or networking permitted without license from IHS Not for Resale

stream of the bend but a straight length required upstream of the bend. If the upstream straight length to the bend is greater than or equal to $30D$, Table 2-4 can also be used to provide a wider range of tube bundle locations (since these locations will rarely be required when designing installations, these options are not shown in Fig. 2-8).

2-5.3.3 The Zanker Flow Conditioner Plate. The Zanker Conditioner Plate described here is a development of the Zanker conditioner described in para. 1C-3.2.5 of Part 1 of this Standard. The Zanker Conditioner Plate has the same distribution of holes in a plate, but does not have the egg-box honeycomb attached to the plate. Instead, the plate thickness has been increased to $D/8$. It is not patented.

The Zanker Conditioner Plate shown in Fig. 2-9 meets the compliance test requirements given in para. 1-6.4.1(b) and 1-6.4.1(c) of this Standard, provided it meets the manufacturing specification in para. 5.3.2.3 and is installed in accordance with para. 5.3.2.3(a) and 5.3.2.3(b).

The Zanker flow conditioner plate consists of 32 bored holes arranged in a symmetrical circular pattern. The dimensions of the holes are a function of the pipe inside diameter D. The tolerance on the diameter of each hole is $\pm$ 0.1 mm ($\pm$ 0.004 in.) for $D < 100$ mm (4 in.).

The perforated plate thickness, t_c, is such that $0.12D \leq t_c \leq 0.15D$. The flange thickness depends on the application; the outer diameter and flange face surfaces depend on the flange type and application.

The pressure loss coefficient, K, for Zanker Conditioner Plate is approximately equal to 3, where K is given by the following equation:

$$K = \frac{\Delta p_c}{\frac{1}{2}\rho V^2} \tag{2-13}$$

where

Δp_c = pressure loss across the Zanker Conditioner Plate
V = mean axial velocity of the fluid in the pipe

2-5.3.3.1 Installation. Provided that $L_f \geq 18D$, it is acceptable to install the Zanker Conditioner Plate so that L_s, the distance between the downstream face of the Zanker Conditioner Plate and the orifice plate is such that $7.5D \leq L_s \leq (L_f - 8.5)D$, provided that $\beta \leq 0.67$.

This location is acceptable downstream of any fitting. A wider range of locations for the Zanker Conditioner Plate is permissible if the range of upstream fittings is restricted, if the overall length between the upstream fitting and the orifice plate is increased, or if the diameter ratio of the orifice plate is decreased. The distance to a bend (or bend combination) or a tee is measured to the downstream end of the curved portion of the nearest (or only) bend or of the tee. The distance to a reducer or expander is measured to the downstream end of the conical portion of the reducer or increaser.

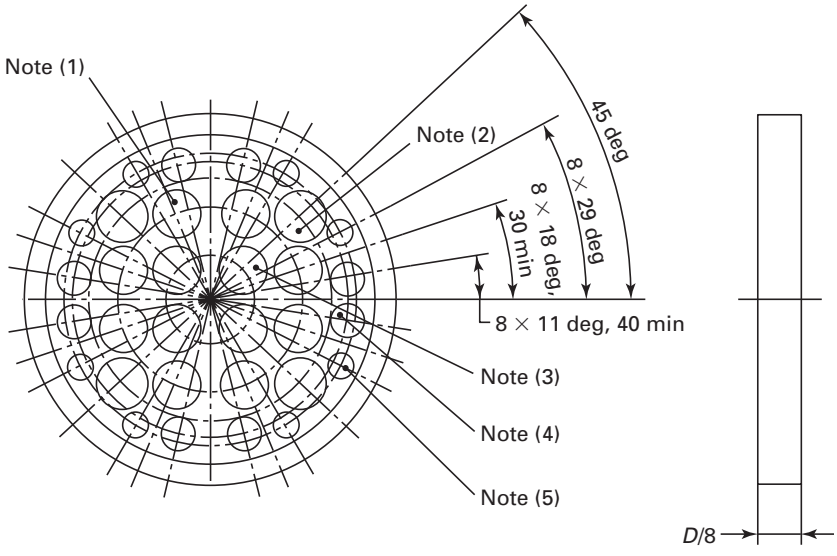

NOTES:
(1) Hole diameter $0.139D$, pitch circle diameter $0.56D \pm 0.0056D$, 8 holes.
(2) Hole diameter $0.1365D$, pitch circle diameter $0.75D \pm 0.0075D$, 4 holes.
(3) Hole diameter $0.141D$, pitch circle diameter $0.25D \pm 0.0025D$, 4 holes.
(4) Hole diameter $0.110D$, pitch circle diameter $0.85D \pm 0.0085D$, 8 holes.
(5) Hole diameter $0.077D$, pitch circle diameter $0.90D \pm 0.009D$, 8 holes.

Fig. 2-9 Zanker Flow Conditioner Plate

Copyright ASME International
Provided by IHS under license with ASME
No reproduction or networking permitted without license from IHS
Not for Resale

2-5.4 Circularity of the Pipe

(a) The length of the upstream pipe section adjacent to the orifice plate (or to the carrier ring if there is one) shall be at least 2*D* and cylindrical. The pipe is said to be cylindrical when no diameter in any plane differs by more than 0.3% from the mean value of *D* obtained from the measurements specified in para. 2-5.4(b).

(b) The value for the pipe diameter, *D* shall be the mean of the internal diameters over a length of 0.5*D* upstream of the upstream pressure tap. The mean internal diameter shall be the arithmetic mean of measurements of at least twelve diameters: four diameters (positioned at approximately equal angles to each other) and distributed in each of at least three cross sectional planes. These planes shall be evenly distributed over a length of 0.5*D*. Two of these planes shall be 0*D* and 0.5*D* from the upstream tap, and one shall be in the plane of the weld (in the case of a weld-neck construction). If there is a carrier ring (see Fig. 2-4), this value of 0.5*D* shall be measured from the upstream edge of the carrier ring.

(c) Beyond 2*D* from the orifice plate, the upstream pipe run between the orifice plate and the first upstream fitting or disturbance can be made up of one or more sections of pipe.

Between 2*D* and 10*D* from the orifice plate, no additional uncertainty in the discharge coefficient is incurred if the diameter step (the difference between the diameters) between any two sections does not exceed 0.3% of the mean value of *D* obtained from the measurements specified in para. 2-5.4(b). Moreover, the actual step caused by misalignment and/or change in diameter must not exceed 0.3% of *D* at any point on the internal circumference of the pipe. Mating flanges, therefore, require the bores to be matched and the flanges aligned on installation. Dowels or self-centering gaskets can be used.

Beyond 10*D* from the orifice plate, no additional uncertainty in the discharge coefficient is involved provided that the diameter step (the difference between the diameters) between any two sections does not exceed 2% of the mean value of *D* obtained from the measurements specified in para. 2-5.4(b). Moreover, the actual step caused by misalignment and/or change in diameter must not exceed 2% of *D* at any point of the internal circumference of the pipe. If the pipe diameter upstream of the step is greater than that downstream of it, the permitted diameter and actual steps are increased from 2% to 6% of *D*. On each side of the step, the pipe shall have a diameter between 0.98*D* and 1.06*D*. Beyond 10*D* from the orifice plate, the use of gaskets between sections will not violate this requirement provided that in use they are no thicker than 3.2 mm (0.125 in.) and they do not protrude into the flow.

At a location that is both beyond 10D from the orifice plate and beyond the first location where an increaser could be fitted in accordance with Column 10A of Table 2-3, no additional uncertainty in the discharge coefficient is involved provided that the diameter step (the difference between the diameters) between any two sections does not exceed 6% of the mean value of *D* obtained from the measurements specified in para. 2-5.4(b). Moreover, the actual step caused by misalignment and/or change in diameter shall not exceed 6% of *D* at any point of the internal circumference of the pipe. On each side of the step, the pipe shall have a diameter between 0.94*D* and 1.06*D*. The first location where an expander could be fitted in accordance with Column 10A of Table 2-3 depends on the diameter ratio of the orifice plate, for example, it is 26*D* from the orifice plate if $\beta = 0.6$.

(d) An additional uncertainty of 0.2% shall be added arithmetically to the uncertainty for the discharge coefficient if the diameter step ΔD between any two sections exceeds the limits given in para. 2-5.4(c), but complies with the following relationships:

$$\frac{\Delta D}{D} \le 0.002\left(\frac{\frac{s}{D} + 0.4}{0.1 + 2.3\beta^4}\right) \tag{2-14}$$

$$\frac{\Delta D}{D} \le 0.05 \tag{2-15}$$

where

s = distance of the step from the upstream pressure tap or, if a carrier ring is used, from the upstream edge of the recess formed by the carrier ring

(e) If a step is greater than any one of the limits given in the inequalities above, the installation is not in accordance with Part 2. For further guidance refer to para. 1-5.1(a) of this Standard.

(f) No diameter of the downstream straight length considered along a length of at least 2*D* from the upstream face of the orifice plate shall differ from the mean diameter of the upstream straight length by more than 3%. This can be judged by checking a single diameter of the downstream straight length. Mating flanges would require the bores to be matched and the flanges aligned on installation. Dowels or self-centering gaskets can be used.

2-5.5 Location of Orifice Plate and Carrier Rings

(a) The orifice plate shall be placed in the pipe in such a way that the fluid flows toward the upstream face and away from the downstream face.

(b) The orifice plate shall be perpendicular to the centerline of the pipe to within 1 deg.

(c) The orifice plate shall be centered in the pipe. The distance, e_c, between the centerline of the orifice and the centerlines of the pipe on the upstream and downstream sides shall be measured and minimized.

At each tap cross section, the distance between the centerline of the orifice and the centerline of the pipe (in which the tap is located) shall be determined. The distance shall be broken into components that are parallel to and perpendicular to the axis of the pressure tap.

Copyright ASME International
Provided by IHS under license with ASME
No reproduction or networking permitted without license from IHS
Not for Resale

e_{cl}, the component in the direction parallel to the pressure tap, shall for each pressure tap be such that

$$e_{cl} \leq \frac{0.0025D}{0.1 + 2.3\beta^4} \tag{2-16}$$

e_{cn}, the component in the direction perpendicular to the pressure tap, shall for each pressure tap be such that

$$e_{cn} \leq \frac{0.005D}{0.1 + 2.3\beta^4} \tag{2-17}$$

If for one or more pressure taps

$$\frac{0.0025D}{0.1 + 2.3\beta^4} < e_{cl} \leq \frac{0.005D}{0.1 + 2.3\beta^4} \tag{2-18}$$

an additional uncertainty of 0.3% shall be added arithmetically to the uncertainty on the discharge coefficient, C. This additional uncertainty shall only be added once even if the above inequality holds for several pressure taps.

In the case where for any pressure tap either

$$e_{cl} \text{ or } e_{cn} > \frac{0.005D}{0.1 + 2.3\beta^4} \tag{2-19}$$

Part 2 gives no information by which to predict the value of any additional uncertainty due to lack of concentricity to be taken into account.

(d) When carrier rings are used, they shall be centered such that they do not protrude into the pipe at any point.

2-5.6 Method of Fixing and Gaskets

(a) The method of fixing and tightening shall be such that once the orifice plate has been installed in the proper position, it remains so. When holding the orifice plate between flanges, it is necessary, to allow for its free thermal expansion and to avoid buckling and distortion.

(b) Gaskets or sealing rings shall be made and inserted in such a way that they do not protrude at any point inside the pipe or across the pressure taps (or slots when corner taps are used). They shall be as thin as possible, with due consideration taken in maintaining the relationship as defined in para. 2-4.2.

(c) If gaskets are used between the orifice plate and the annular chamber rings, they shall not protrude inside the annular chamber.

Copyright ASME International
Provided by IHS under license with ASME
No reproduction or networking permitted without license from IHS

Not for Resale

NONMANDATORY APPENDIX 2A
TABLES OF DISCHARGE COEFFICIENTS AND EXPANSIBILITY FACTORS

Table 2A-1 Orifice Plate With Corner Taps: Discharge Coefficient, C, for $D \leq 71.12$ mm (2.8 in.)

Diameter Ratio, β	Discharge Coefficient, C, for R_D Equal to											
	5 (10^3)	1 (10^4)	2 (10^4)	3 (10^4)	5 (10^4)	7 (10^4)	1 (10^5)	3 (10^5)	1 (10^6)	1 (10^7)	1 (10^8)	∞
0.10	0.6006	0.5990	0.5980	0.5976	0.5972	0.5970	0.5969	0.5966	0.5965	0.5964	0.5964	0.5964
0.12	0.6014	0.5995	0.5983	0.5979	0.5975	0.5973	0.5971	0.5968	0.5966	0.5965	0.5965	0.5965
0.14	0.6021	0.6000	0.5987	0.5982	0.5977	0.5975	0.5973	0.5969	0.5968	0.5966	0.5966	0.5966
0.16	0.6028	0.6005	0.5991	0.5985	0.5980	0.5978	0.5976	0.5971	0.5969	0.5968	0.5968	0.5968
0.18	0.6036	0.6011	0.5995	0.5989	0.5983	0.5981	0.5978	0.5974	0.5971	0.5970	0.5970	0.5969
0.20	0.6045	0.6017	0.6000	0.5993	0.5987	0.5984	0.5981	0.5976	0.5974	0.5972	0.5972	0.5971
0.22	0.6053	0.6023	0.6005	0.5998	0.5991	0.5987	0.5985	0.5979	0.5976	0.5974	0.5974	0.5974
0.24	0.6062	0.6030	0.6010	0.6002	0.5995	0.5991	0.5988	0.5982	0.5979	0.5977	0.5976	0.5976
0.26	0.6072	0.6038	0.6016	0.6007	0.5999	0.5996	0.5992	0.5986	0.5982	0.5980	0.5979	0.5979
0.28	0.6083	0.6046	0.6022	0.6013	0.6004	0.6000	0.5997	0.5990	0.5986	0.5983	0.5982	0.5981
0.30	0.6095	0.6054	0.6029	0.6019	0.6010	0.6005	0.6001	0.5994	0.5989	0.5986	0.5985	0.5984
0.32	0.6107	0.6063	0.6036	0.6026	0.6016	0.6011	0.6006	0.5998	0.5993	0.5990	0.5988	0.5987
0.34	0.6120	0.6073	0.6044	0.6033	0.6022	0.6017	0.6012	0.6003	0.5998	0.5993	0.5992	0.5991
0.36	0.6135	0.6084	0.6053	0.6040	0.6029	0.6023	0.6018	0.6008	0.6002	0.5997	0.5996	0.5994
0.38	0.6151	0.6096	0.6062	0.6049	0.6036	0.6030	0.6024	0.6013	0.6007	0.6001	0.5999	0.5998
0.40	0.6168	0.6109	0.6072	0.6058	0.6044	0.6037	0.6031	0.6019	0.6012	0.6006	0.6003	0.6001
0.42	0.6187	0.6122	0.6083	0.6067	0.6052	0.6044	0.6038	0.6025	0.6017	0.6010	0.6007	0.6005
0.44	0.6207	0.6137	0.6094	0.6077	0.6061	0.6052	0.6045	0.6031	0.6022	0.6014	0.6011	0.6008
0.46	0.6228	0.6152	0.6106	0.6087	0.6070	0.6061	0.6053	0.6037	0.6027	0.6019	0.6015	0.6012
0.48	0.6251	0.6169	0.6118	0.6098	0.6079	0.6069	0.6061	0.6043	0.6033	0.6023	0.6019	0.6015
0.50	0.6276	0.6186	0.6131	0.6109	0.6088	0.6078	0.6069	0.6050	0.6038	0.6027	0.6022	0.6018
0.51	0.6289	0.6195	0.6138	0.6115	0.6093	0.6082	0.6073	0.6053	0.6040	0.6029	0.6024	0.6019
0.52	0.6302	0.6204	0.6144	0.6121	0.6098	0.6087	0.6077	0.6056	0.6043	0.6030	0.6025	0.6020
0.53	0.6316	0.6213	0.6151	0.6126	0.6103	0.6091	0.6080	0.6059	0.6045	0.6032	0.6026	0.6021
0.54	0.6330	0.6223	0.6158	0.6132	0.6108	0.6095	0.6084	0.6061	0.6047	0.6033	0.6027	0.6021
0.55	0.6344	0.6232	0.6165	0.6138	0.6112	0.6099	0.6088	0.6064	0.6049	0.6034	0.6028	0.6022
0.56	. . .	0.6242	0.6172	0.6143	0.6117	0.6103	0.6091	0.6066	0.6050	0.6035	0.6028	0.6022
0.57	. . .	0.6252	0.6179	0.6149	0.6121	0.6107	0.6095	0.6069	0.6052	0.6036	0.6028	0.6022
0.58	. . .	0.6262	0.6185	0.6155	0.6126	0.6111	0.6098	0.6070	0.6053	0.6036	0.6028	0.6021
0.59	. . .	0.6272	0.6192	0.6160	0.6130	0.6114	0.6101	0.6072	0.6054	0.6036	0.6028	0.6020
0.60	. . .	0.6282	0.6198	0.6165	0.6134	0.6117	0.6103	0.6073	0.6054	0.6035	0.6027	0.6019
0.61	. . .	0.6292	0.6205	0.6170	0.6137	0.6120	0.6106	0.6074	0.6054	0.6034	0.6025	0.6017
0.62	. . .	0.6302	0.6211	0.6175	0.6140	0.6123	0.6108	0.6075	0.6054	0.6033	0.6023	0.6014
0.63	. . .	0.6312	0.6217	0.6179	0.6143	0.6125	0.6109	0.6075	0.6052	0.6030	0.6021	0.6011
0.64	. . .	0.6321	0.6222	0.6183	0.6145	0.6126	0.6110	0.6074	0.6051	0.6028	0.6017	0.6007
0.65	. . .	0.6331	0.6227	0.6186	0.6147	0.6127	0.6110	0.6073	0.6048	0.6024	0.6013	0.6002
0.66	. . .	0.6340	0.6232	0.6189	0.6148	0.6128	0.6110	0.6071	0.6045	0.6020	0.6008	0.5997
0.67	. . .	0.6348	0.6236	0.6191	0.6149	0.6127	0.6108	0.6068	0.6041	0.6014	0.6002	0.5990
0.68	. . .	0.6357	0.6239	0.6193	0.6149	0.6126	0.6106	0.6064	0.6036	0.6008	0.5995	0.5983
0.69	. . .	0.6364	0.6242	0.6193	0.6147	0.6124	0.6104	0.6059	0.6030	0.6001	0.5987	0.5974
0.70	. . .	0.6372	0.6244	0.6193	0.6145	0.6121	0.6100	0.6053	0.6023	0.5992	0.5978	0.5964
0.71	. . .	0.6378	0.6245	0.6192	0.6142	0.6117	0.6094	0.6046	0.6014	0.5982	0.5967	0.5953
0.72	. . .	0.6383	0.6244	0.6189	0.6138	0.6111	0.6088	0.6038	0.6005	0.5971	0.5955	0.5940
0.73	. . .	0.6388	0.6243	0.6186	0.6132	0.6104	0.6080	0.6028	0.5993	0.5958	0.5942	0.5926
0.74	. . .	0.6391	0.6240	0.6181	0.6125	0.6096	0.6071	0.6016	0.5980	0.5943	0.5926	0.5910
0.75	. . .	0.6394	0.6236	0.6174	0.6116	0.6086	0.6060	0.6003	0.5965	0.5927	0.5909	0.5892

GENERAL NOTE: This table is given for convenience. The values given are not intended for precise interpolation and extrapolation is not permitted.

Copyright ASME International
Provided by IHS under license with ASME
No reproduction or networking permitted without license from IHS
Not for Resale

Table 2A-2 Orifice Plate With D and $D/2$ Taps: Discharge Coefficient, C, for $D \leq 71.12$ mm (2.8 in.)

Diameter Ratio, β	Discharge Coefficient, C, for R_D Equal to											
	5 (10^3)	1 (10^4)	2 (10^4)	3 (10^4)	5 (10^4)	7 (10^4)	1 (10^5)	3 (10^5)	1 (10^6)	1 (10^7)	1 (10^8)	∞
0.10	0.6003	0.5987	0.5977	0.5973	0.5969	0.5967	0.5966	0.5963	0.5962	0.5961	0.5961	0.5960
0.12	0.6010	0.5991	0.5979	0.5975	0.5971	0.5969	0.5967	0.5964	0.5962	0.5961	0.5961	0.5961
0.14	0.6016	0.5995	0.5982	0.5977	0.5972	0.5970	0.5968	0.5965	0.5963	0.5962	0.5961	0.5961
0.16	0.6023	0.6000	0.5985	0.5980	0.5974	0.5972	0.5970	0.5966	0.5964	0.5962	0.5962	0.5962
0.18	0.6029	0.6004	0.5989	0.5982	0.5977	0.5974	0.5971	0.5967	0.5965	0.5963	0.5963	0.5963
0.20	0.6037	0.6009	0.5992	0.5985	0.5979	0.5976	0.5974	0.5969	0.5966	0.5964	0.5964	0.5964
0.22	0.6044	0.6015	0.5996	0.5989	0.5982	0.5979	0.5976	0.5971	0.5968	0.5966	0.5965	0.5965
0.24	0.6053	0.6021	0.6001	0.5993	0.5985	0.5982	0.5979	0.5973	0.5970	0.5967	0.5967	0.5966
0.26	0.6062	0.6027	0.6006	0.5997	0.5989	0.5985	0.5982	0.5975	0.5972	0.5969	0.5969	0.5968
0.28	0.6072	0.6034	0.6011	0.6002	0.5993	0.5989	0.5985	0.5978	0.5975	0.5972	0.5971	0.5970
0.30	0.6082	0.6042	0.6017	0.6007	0.5998	0.5993	0.5989	0.5982	0.5978	0.5974	0.5973	0.5973
0.32	0.6094	0.6051	0.6024	0.6013	0.6003	0.5998	0.5994	0.5986	0.5981	0.5977	0.5976	0.5975
0.34	0.6107	0.6060	0.6031	0.6020	0.6009	0.6004	0.5999	0.5990	0.5985	0.5981	0.5979	0.5978
0.36	0.6121	0.6071	0.6040	0.6027	0.6016	0.6010	0.6005	0.5995	0.5989	0.5984	0.5983	0.5981
0.38	0.6137	0.6082	0.6049	0.6035	0.6023	0.6016	0.6011	0.6000	0.5994	0.5988	0.5986	0.5985
0.40	0.6153	0.6095	0.6059	0.6044	0.6031	0.6024	0.6018	0.6006	0.5999	0.5993	0.5991	0.5989
0.42	0.6172	0.6109	0.6070	0.6054	0.6039	0.6032	0.6025	0.6012	0.6005	0.5998	0.5995	0.5993
0.44	0.6192	0.6124	0.6082	0.6065	0.6049	0.6041	0.6034	0.6019	0.6011	0.6003	0.6000	0.5997
0.46	0.6214	0.6140	0.6094	0.6076	0.6059	0.6050	0.6042	0.6027	0.6017	0.6008	0.6005	0.6002
0.48	0.6238	0.6157	0.6108	0.6088	0.6070	0.6060	0.6052	0.6035	0.6024	0.6014	0.6010	0.6006
0.50	0.6264	0.6176	0.6123	0.6101	0.6081	0.6071	0.6062	0.6043	0.6031	0.6020	0.6016	0.6011
0.51	0.6278	0.6186	0.6131	0.6108	0.6087	0.6076	0.6067	0.6047	0.6035	0.6023	0.6019	0.6014
0.52	0.6292	0.6197	0.6139	0.6115	0.6093	0.6082	0.6072	0.6052	0.6039	0.6027	0.6021	0.6016
0.53	0.6307	0.6207	0.6147	0.6123	0.6100	0.6088	0.6078	0.6056	0.6043	0.6030	0.6024	0.6019
0.54	0.6322	0.6218	0.6155	0.6130	0.6106	0.6094	0.6083	0.6061	0.6047	0.6033	0.6027	0.6021
0.55	0.6337	0.6229	0.6164	0.6138	0.6113	0.6100	0.6089	0.6065	0.6050	0.6036	0.6030	0.6024
0.56	...	0.6241	0.6173	0.6145	0.6119	0.6106	0.6095	0.6070	0.6054	0.6039	0.6032	0.6026
0.57	...	0.6253	0.6182	0.6153	0.6126	0.6112	0.6100	0.6075	0.6058	0.6042	0.6035	0.6028
0.58	...	0.6265	0.6191	0.6161	0.6133	0.6119	0.6106	0.6079	0.6062	0.6045	0.6038	0.6030
0.59	...	0.6277	0.6200	0.6169	0.6140	0.6125	0.6112	0.6084	0.6066	0.6048	0.6040	0.6032
0.60	...	0.6290	0.6210	0.6177	0.6147	0.6131	0.6118	0.6088	0.6070	0.6051	0.6042	0.6034
0.61	...	0.6303	0.6219	0.6186	0.6154	0.6138	0.6124	0.6093	0.6073	0.6053	0.6044	0.6036
0.62	...	0.6316	0.6229	0.6194	0.6161	0.6144	0.6129	0.6097	0.6077	0.6056	0.6046	0.6037
0.63	...	0.6329	0.6238	0.6202	0.6168	0.6150	0.6135	0.6102	0.6080	0.6058	0.6048	0.6039
0.64	...	0.6343	0.6248	0.6210	0.6175	0.6156	0.6140	0.6106	0.6083	0.6060	0.6050	0.6039
0.65	...	0.6356	0.6258	0.6219	0.6182	0.6162	0.6146	0.6109	0.6086	0.6062	0.6051	0.6040
0.66	...	0.6370	0.6268	0.6227	0.6188	0.6168	0.6151	0.6113	0.6088	0.6063	0.6051	0.6040
0.67	...	0.6384	0.6277	0.6235	0.6195	0.6174	0.6156	0.6116	0.6090	0.6064	0.6052	0.6040
0.68	...	0.6398	0.6287	0.6243	0.6201	0.6179	0.6161	0.6120	0.6092	0.6065	0.6052	0.6039
0.69	...	0.6411	0.6296	0.6250	0.6207	0.6185	0.6165	0.6122	0.6094	0.6065	0.6051	0.6038
0.70	...	0.6425	0.6305	0.6258	0.6213	0.6189	0.6169	0.6125	0.6095	0.6065	0.6051	0.6037
0.71	...	0.6439	0.6315	0.6265	0.6218	0.6194	0.6173	0.6127	0.6096	0.6064	0.6049	0.6035
0.72	...	0.6453	0.6323	0.6272	0.6223	0.6198	0.6176	0.6128	0.6096	0.6063	0.6047	0.6032
0.73	...	0.6467	0.6332	0.6279	0.6228	0.6202	0.6179	0.6129	0.6096	0.6061	0.6045	0.6029
0.74	...	0.6480	0.6340	0.6285	0.6233	0.6206	0.6182	0.6130	0.6095	0.6059	0.6042	0.6025
0.75	...	0.6494	0.6349	0.6291	0.6237	0.6209	0.6184	0.6130	0.6094	0.6056	0.6038	0.6021

GENERAL NOTE: This table is given for convenience. The values given are not intended for precise interpolation and extrapolation is not permitted.

Copyright ASME International
Provided by IHS under license with ASME
No reproduction or networking permitted without license from IHS
Not for Resale

Table 2A-3 Orifice Plate With Flange Taps: Discharge Coefficient, C, for $D = 50$ mm (2 in.)

Diameter Ratio, β	Discharge Coefficient, C, for R_D Equal to											
	5 (10^3)	1 (10^4)	2 (10^4)	3 (10^4)	5 (10^4)	7 (10^4)	1 (10^5)	3 (10^5)	1 (10^6)	1 (10^7)	1 (10^8)	∞
0.25	0.6102	0.6069	0.6048	0.6040	0.6032	0.6029	0.6025	0.6019	0.6016	0.6014	0.6013	0.6012
0.26	0.6106	0.6071	0.6050	0.6041	0.6033	0.6029	0.6026	0.6020	0.6016	0.6014	0.6013	0.6012
0.28	0.6114	0.6076	0.6053	0.6044	0.6035	0.6031	0.6028	0.6021	0.6017	0.6014	0.6013	0.6012
0.30	0.6123	0.6082	0.6057	0.6047	0.6038	0.6034	0.6030	0.6022	0.6018	0.6015	0.6014	0.6013
0.32	0.6132	0.6089	0.6062	0.6052	0.6042	0.6037	0.6032	0.6024	0.6019	0.6016	0.6014	0.6013
0.34	0.6143	0.6097	0.6068	0.6056	0.6045	0.6040	0.6035	0.6026	0.6021	0.6017	0.6016	0.6014
0.36	0.6155	0.6105	0.6074	0.6062	0.6050	0.6044	0.6039	0.6029	0.6023	0.6019	0.6017	0.6016
0.38	0.6169	0.6115	0.6081	0.6068	0.6055	0.6049	0.6043	0.6032	0.6026	0.6021	0.6019	0.6017
0.40	0.6184	0.6125	0.6089	0.6075	0.6061	0.6054	0.6048	0.6036	0.6029	0.6023	0.6021	0.6019
0.42	0.6200	0.6137	0.6098	0.6082	0.6068	0.6060	0.6054	0.6041	0.6033	0.6026	0.6023	0.6021
0.44	0.6219	0.6150	0.6108	0.6091	0.6075	0.6067	0.6060	0.6045	0.6037	0.6029	0.6026	0.6023
0.46	0.6239	0.6164	0.6119	0.6100	0.6083	0.6074	0.6067	0.6051	0.6041	0.6033	0.6029	0.6026
0.48	0.6260	0.6180	0.6130	0.6110	0.6092	0.6082	0.6074	0.6057	0.6046	0.6036	0.6032	0.6028
0.50	0.6284	0.6196	0.6143	0.6121	0.6101	0.6091	0.6082	0.6063	0.6051	0.6040	0.6036	0.6031
0.51	0.6297	0.6205	0.6149	0.6127	0.6106	0.6095	0.6086	0.6066	0.6054	0.6042	0.6037	0.6033
0.52	0.6310	0.6214	0.6156	0.6133	0.6111	0.6100	0.6090	0.6069	0.6056	0.6044	0.6039	0.6034
0.53	0.6324	0.6224	0.6163	0.6139	0.6116	0.6105	0.6094	0.6073	0.6059	0.6046	0.6041	0.6035
0.54	0.6338	0.6234	0.6171	0.6145	0.6122	0.6109	0.6099	0.6076	0.6062	0.6048	0.6042	0.6037
0.55	0.6352	0.6244	0.6178	0.6152	0.6127	0.6114	0.6103	0.6080	0.6065	0.6050	0.6044	0.6038
0.56	0.6367	0.6254	0.6186	0.6159	0.6133	0.6119	0.6108	0.6083	0.6067	0.6052	0.6045	0.6039
0.57	0.6383	0.6265	0.6194	0.6165	0.6138	0.6124	0.6112	0.6087	0.6070	0.6054	0.6047	0.6040
0.58	0.6399	0.6276	0.6202	0.6172	0.6144	0.6130	0.6117	0.6090	0.6073	0.6056	0.6048	0.6041
0.59	0.6416	0.6287	0.6210	0.6179	0.6150	0.6135	0.6122	0.6093	0.6075	0.6058	0.6050	0.6042
0.60	0.6433	0.6299	0.6218	0.6186	0.6155	0.6140	0.6126	0.6097	0.6078	0.6059	0.6051	0.6043
0.61	0.6450	0.6310	0.6227	0.6193	0.6161	0.6145	0.6131	0.6100	0.6080	0.6060	0.6051	0.6043
0.62	0.6468	0.6322	0.6235	0.6200	0.6167	0.6150	0.6135	0.6103	0.6082	0.6062	0.6052	0.6043
0.63	0.6486	0.6334	0.6243	0.6207	0.6173	0.6155	0.6139	0.6106	0.6084	0.6062	0.6053	0.6043
0.64	0.6505	0.6347	0.6252	0.6214	0.6178	0.6160	0.6144	0.6109	0.6086	0.6063	0.6053	0.6043
0.65	0.6524	0.6359	0.6260	0.6221	0.6184	0.6164	0.6148	0.6111	0.6088	0.6064	0.6053	0.6042
0.66	0.6544	0.6371	0.6269	0.6228	0.6189	0.6169	0.6152	0.6114	0.6089	0.6064	0.6052	0.6041
0.67	0.6564	0.6384	0.6277	0.6234	0.6194	0.6173	0.6155	0.6116	0.6090	0.6063	0.6051	0.6039
0.68	0.6584	0.6396	0.6285	0.6241	0.6199	0.6177	0.6158	0.6117	0.6090	0.6062	0.6050	0.6037
0.69	0.6604	0.6409	0.6293	0.6247	0.6204	0.6181	0.6161	0.6119	0.6090	0.6061	0.6048	0.6035
0.70	0.6625	0.6421	0.6301	0.6253	0.6208	0.6185	0.6164	0.6120	0.6090	0.6060	0.6045	0.6032
0.71	0.6646	0.6434	0.6309	0.6259	0.6212	0.6188	0.6166	0.6120	0.6089	0.6057	0.6043	0.6028
0.72	0.6667	0.6446	0.6316	0.6265	0.6216	0.6190	0.6168	0.6120	0.6088	0.6055	0.6039	0.6024
0.73	0.6689	0.6459	0.6323	0.6270	0.6219	0.6193	0.6170	0.6120	0.6086	0.6051	0.6035	0.6019
0.74	0.6710	0.6471	0.6330	0.6275	0.6222	0.6195	0.6171	0.6119	0.6084	0.6047	0.6030	0.6014
0.75	0.6732	0.6483	0.6337	0.6279	0.6224	0.6196	0.6171	0.6117	0.6081	0.6043	0.6025	0.6008

GENERAL NOTE: This table is given for convenience. The values given are not intended for precise interpolation and extrapolation is not permitted.

Copyright ASME International
Provided by IHS under license with ASME
No reproduction or networking permitted without license from IHS
Not for Resale

Table 2A-4 Orifice Plate With Flange Taps: Discharge Coefficient, C, for $D = 75$ mm (3 in.)

Diameter Ratio, β	Discharge Coefficient, C, for R_D Equal to											
	5 (10^3)	1 (10^4)	2 (10^4)	3 (10^4)	5 (10^4)	7 (10^4)	1 (10^5)	3 (10^5)	1 (10^6)	1 (10^7)	1 (10^8)	∞
0.17	0.6027	0.6003	0.5988	0.5982	0.5977	0.5974	0.5972	0.5967	0.5965	0.5964	0.5964	0.5963
0.18	0.6031	0.6005	0.5990	0.5984	0.5978	0.5975	0.5973	0.5968	0.5966	0.5964	0.5964	0.5964
0.20	0.6038	0.6011	0.5994	0.5987	0.5981	0.5977	0.5975	0.5970	0.5967	0.5966	0.5965	0.5965
0.22	0.6046	0.6016	0.5998	0.5990	0.5984	0.5980	0.5977	0.5972	0.5969	0.5967	0.5967	0.5966
0.24	0.6054	0.6022	0.6002	0.5994	0.5987	0.5983	0.5980	0.5974	0.5971	0.5969	0.5969	0.5968
0.26	0.6064	0.6029	0.6007	0.5999	0.5991	0.5987	0.5984	0.5977	0.5974	0.5971	0.5970	0.5970
0.28	0.6074	0.6036	0.6013	0.6004	0.5995	0.5991	0.5987	0.5980	0.5976	0.5974	0.5973	0.5972
0.30	0.6084	0.6044	0.6019	0.6009	0.6000	0.5995	0.5991	0.5984	0.5979	0.5976	0.5975	0.5974
0.32	0.6096	0.6053	0.6026	0.6015	0.6005	0.6000	0.5996	0.5988	0.5983	0.5979	0.5978	0.5977
0.34	0.6109	0.6062	0.6033	0.6022	0.6011	0.6006	0.6001	0.5992	0.5987	0.5983	0.5981	0.5980
0.36	0.6123	0.6073	0.6042	0.6029	0.6017	0.6012	0.6007	0.5997	0.5991	0.5986	0.5984	0.5983
0.38	0.6139	0.6084	0.6051	0.6037	0.6025	0.6018	0.6013	0.6002	0.5995	0.5990	0.5988	0.5986
0.40	0.6155	0.6097	0.6060	0.6046	0.6032	0.6025	0.6020	0.6008	0.6000	0.5994	0.5992	0.5990
0.42	0.6174	0.6110	0.6071	0.6055	0.6041	0.6033	0.6027	0.6014	0.6006	0.5999	0.5996	0.5994
0.44	0.6194	0.6125	0.6083	0.6066	0.6050	0.6042	0.6035	0.6020	0.6012	0.6004	0.6001	0.5998
0.46	0.6216	0.6141	0.6095	0.6077	0.6059	0.6051	0.6043	0.6027	0.6018	0.6009	0.6005	0.6002
0.48	0.6239	0.6158	0.6108	0.6089	0.6070	0.6060	0.6052	0.6035	0.6024	0.6014	0.6010	0.6006
0.50	0.6264	0.6176	0.6123	0.6101	0.6081	0.6070	0.6061	0.6042	0.6031	0.6020	0.6015	0.6011
0.51	0.6278	0.6186	0.6130	0.6107	0.6086	0.6075	0.6066	0.6046	0.6034	0.6022	0.6017	0.6013
0.52	0.6292	0.6196	0.6138	0.6114	0.6092	0.6081	0.6071	0.6050	0.6037	0.6025	0.6020	0.6015
0.53	0.6306	0.6206	0.6145	0.6121	0.6098	0.6086	0.6076	0.6054	0.6041	0.6028	0.6022	0.6017
0.54	0.6321	0.6216	0.6153	0.6128	0.6104	0.6092	0.6081	0.6058	0.6044	0.6030	0.6024	0.6019
0.55	0.6336	0.6227	0.6161	0.6135	0.6110	0.6097	0.6086	0.6062	0.6047	0.6033	0.6027	0.6021
0.56	0.6352	0.6238	0.6170	0.6142	0.6116	0.6103	0.6091	0.6066	0.6051	0.6035	0.6029	0.6022
0.57	0.6368	0.6249	0.6178	0.6149	0.6122	0.6108	0.6096	0.6070	0.6054	0.6038	0.6031	0.6024
0.58	0.6385	0.6261	0.6186	0.6156	0.6128	0.6114	0.6101	0.6074	0.6057	0.6040	0.6032	0.6025
0.59	0.6402	0.6273	0.6195	0.6164	0.6134	0.6119	0.6106	0.6078	0.6060	0.6042	0.6034	0.6026
0.60	0.6419	0.6284	0.6203	0.6171	0.6140	0.6125	0.6111	0.6082	0.6063	0.6044	0.6035	0.6027
0.61	0.6437	0.6296	0.6212	0.6178	0.6146	0.6130	0.6116	0.6085	0.6065	0.6045	0.6036	0.6028
0.62	0.6455	0.6309	0.6221	0.6186	0.6152	0.6135	0.6120	0.6088	0.6067	0.6047	0.6037	0.6028
0.63	...	0.6321	0.6229	0.6193	0.6158	0.6140	0.6125	0.6091	0.6069	0.6048	0.6038	0.6028
0.64	...	0.6333	0.6238	0.6200	0.6164	0.6145	0.6129	0.6094	0.6071	0.6048	0.6038	0.6028
0.65	...	0.6346	0.6246	0.6207	0.6169	0.6150	0.6133	0.6097	0.6073	0.6049	0.6038	0.6027
0.66	...	0.6358	0.6255	0.6213	0.6174	0.6154	0.6137	0.6099	0.6074	0.6048	0.6037	0.6026
0.67	...	0.6370	0.6263	0.6220	0.6179	0.6158	0.6140	0.6100	0.6074	0.6048	0.6036	0.6024
0.68	...	0.6382	0.6270	0.6226	0.6184	0.6162	0.6143	0.6102	0.6074	0.6046	0.6034	0.6021
0.69	...	0.6395	0.6278	0.6232	0.6188	0.6165	0.6145	0.6102	0.6074	0.6045	0.6031	0.6018
0.70	...	0.6407	0.6285	0.6237	0.6191	0.6168	0.6147	0.6102	0.6073	0.6042	0.6028	0.6014
0.71	...	0.6418	0.6292	0.6242	0.6194	0.6170	0.6148	0.6102	0.6071	0.6039	0.6024	0.6010
0.72	...	0.6430	0.6298	0.6246	0.6197	0.6171	0.6149	0.6101	0.6068	0.6035	0.6019	0.6004
0.73	...	0.6441	0.6304	0.6250	0.6199	0.6172	0.6149	0.6099	0.6065	0.6030	0.6014	0.5998
0.74	...	0.6451	0.6310	0.6253	0.6200	0.6173	0.6149	0.6096	0.6061	0.6025	0.6008	0.5991
0.75	...	0.6462	0.6314	0.6256	0.6201	0.6172	0.6147	0.6093	0.6056	0.6018	0.6000	0.5983

GENERAL NOTE: This table is given for convenience. The values given are not intended for precise interpolation and extrapolation is not permitted.

Copyright ASME International
Provided by IHS under license with ASME
No reproduction or networking permitted without license from IHS
Not for Resale

Table 2A-5 Orifice Plate With Flange Taps: Discharge Coefficient, C, for $D = 100$ mm (4 in.)

Diameter Ratio, β	Discharge Coefficient, C, for R_D Equal to											
	5 (10^3)	1 (10^4)	2 (10^4)	3 (10^4)	5 (10^4)	7 (10^4)	1 (10^5)	3 (10^5)	1 (10^6)	1 (10^7)	1 (10^8)	∞
0.13	0.6014	0.5994	0.5982	0.5977	0.5973	0.5971	0.5969	0.5966	0.5964	0.5963	0.5962	0.5962
0.14	0.6018	0.5997	0.5984	0.5979	0.5974	0.5972	0.5970	0.5966	0.5964	0.5963	0.5963	0.5963
0.16	0.6025	0.6001	0.5987	0.5981	0.5976	0.5974	0.5972	0.5968	0.5965	0.5964	0.5964	0.5964
0.18	0.6032	0.6006	0.5991	0.5985	0.5979	0.5976	0.5974	0.5969	0.5967	0.5965	0.5965	0.5965
0.20	0.6039	0.6012	0.5995	0.5988	0.5982	0.5979	0.5976	0.5971	0.5969	0.5967	0.5966	0.5966
0.22	0.6047	0.6017	0.5999	0.5992	0.5985	0.5981	0.5979	0.5973	0.5970	0.5969	0.5968	0.5968
0.24	0.6056	0.6024	0.6004	0.5996	0.5988	0.5985	0.5982	0.5976	0.5973	0.5970	0.5970	0.5969
0.26	0.6065	0.6030	0.6009	0.6000	0.5992	0.5988	0.5985	0.5979	0.5975	0.5973	0.5972	0.5971
0.28	0.6075	0.6038	0.6014	0.6005	0.5997	0.5992	0.5989	0.5982	0.5978	0.5975	0.5974	0.5974
0.30	0.6086	0.6046	0.6021	0.6011	0.6002	0.5997	0.5993	0.5985	0.5981	0.5978	0.5977	0.5976
0.32	0.6098	0.6054	0.6028	0.6017	0.6007	0.6002	0.5998	0.5989	0.5985	0.5981	0.5980	0.5979
0.34	0.6111	0.6064	0.6035	0.6024	0.6013	0.6007	0.6003	0.5994	0.5988	0.5984	0.5983	0.5982
0.36	0.6125	0.6075	0.6043	0.6031	0.6019	0.6013	0.6008	0.5998	0.5993	0.5988	0.5986	0.5985
0.38	0.6141	0.6086	0.6052	0.6039	0.6026	0.6020	0.6015	0.6004	0.5997	0.5992	0.5990	0.5988
0.40	0.6157	0.6099	0.6062	0.6048	0.6034	0.6027	0.6021	0.6009	0.6002	0.5996	0.5994	0.5992
0.42	0.6176	0.6112	0.6073	0.6057	0.6042	0.6035	0.6029	0.6015	0.6008	0.6001	0.5998	0.5996
0.44	0.6196	0.6127	0.6084	0.6067	0.6051	0.6043	0.6036	0.6022	0.6013	0.6005	0.6002	0.6000
0.46	0.6217	0.6142	0.6097	0.6078	0.6061	0.6052	0.6044	0.6029	0.6019	0.6010	0.6007	0.6003
0.48	0.6241	0.6159	0.6110	0.6090	0.6071	0.6061	0.6053	0.6036	0.6025	0.6015	0.6011	0.6007
0.50	0.6266	0.6177	0.6124	0.6102	0.6081	0.6071	0.6062	0.6043	0.6031	0.6020	0.6016	0.6011
0.51	0.6279	0.6187	0.6131	0.6108	0.6087	0.6076	0.6067	0.6047	0.6034	0.6023	0.6018	0.6013
0.52	0.6293	0.6197	0.6138	0.6115	0.6092	0.6081	0.6071	0.6051	0.6038	0.6025	0.6020	0.6015
0.53	0.6307	0.6207	0.6146	0.6121	0.6098	0.6086	0.6076	0.6054	0.6041	0.6028	0.6022	0.6017
0.54	0.6322	0.6217	0.6153	0.6128	0.6104	0.6091	0.6081	0.6058	0.6044	0.6030	0.6024	0.6018
0.55	. . .	0.6227	0.6161	0.6135	0.6109	0.6097	0.6085	0.6062	0.6047	0.6032	0.6026	0.6020
0.56	. . .	0.6238	0.6169	0.6141	0.6115	0.6102	0.6090	0.6065	0.6050	0.6034	0.6028	0.6021
0.57	. . .	0.6249	0.6177	0.6148	0.6121	0.6107	0.6095	0.6069	0.6052	0.6036	0.6029	0.6022
0.58	. . .	0.6260	0.6185	0.6155	0.6127	0.6112	0.6100	0.6072	0.6055	0.6038	0.6031	0.6023
0.59	. . .	0.6271	0.6193	0.6162	0.6132	0.6117	0.6104	0.6076	0.6058	0.6040	0.6032	0.6024
0.60	. . .	0.6283	0.6201	0.6169	0.6138	0.6122	0.6108	0.6079	0.6060	0.6041	0.6033	0.6025
0.61	. . .	0.6294	0.6209	0.6176	0.6143	0.6127	0.6113	0.6082	0.6062	0.6042	0.6033	0.6025
0.62	. . .	0.6306	0.6218	0.6182	0.6149	0.6132	0.6117	0.6085	0.6064	0.6043	0.6033	0.6024
0.63	. . .	0.6318	0.6226	0.6189	0.6154	0.6136	0.6120	0.6087	0.6065	0.6043	0.6033	0.6024
0.64	. . .	0.6329	0.6233	0.6195	0.6159	0.6140	0.6124	0.6089	0.6066	0.6043	0.6033	0.6022
0.65	. . .	0.6341	0.6241	0.6201	0.6163	0.6144	0.6127	0.6091	0.6067	0.6042	0.6031	0.6021
0.66	. . .	0.6353	0.6249	0.6207	0.6168	0.6148	0.6130	0.6092	0.6067	0.6041	0.6030	0.6019
0.67	. . .	0.6364	0.6256	0.6212	0.6172	0.6151	0.6132	0.6092	0.6066	0.6040	0.6028	0.6016
0.68	. . .	0.6375	0.6263	0.6218	0.6175	0.6153	0.6134	0.6093	0.6065	0.6037	0.6025	0.6012
0.69	. . .	0.6387	0.6269	0.6222	0.6178	0.6155	0.6135	0.6092	0.6063	0.6034	0.6021	0.6008
0.70	. . .	0.6397	0.6275	0.6226	0.6180	0.6157	0.6136	0.6091	0.6061	0.6031	0.6016	0.6003
0.71	. . .	0.6408	0.6280	0.6230	0.6182	0.6157	0.6136	0.6089	0.6058	0.6026	0.6011	0.5997
0.72	. . .	0.6418	0.6285	0.6233	0.6183	0.6157	0.6135	0.6086	0.6054	0.6020	0.6005	0.5990
0.73	. . .	0.6428	0.6290	0.6235	0.6183	0.6157	0.6133	0.6083	0.6049	0.6014	0.5998	0.5982
0.74	. . .	0.6437	0.6293	0.6236	0.6183	0.6155	0.6131	0.6078	0.6043	0.6006	0.5989	0.5973
0.75	. . .	0.6445	0.6296	0.6237	0.6181	0.6153	0.6127	0.6072	0.6036	0.5998	0.5980	0.5962

GENERAL NOTE: This table is given for convenience. The values given are not intended for precise interpolation and extrapolation is not permitted.

Copyright ASME International
Provided by IHS under license with ASME
No reproduction or networking permitted without license from IHS
Not for Resale

Table 2A-6 Orifice Plate With Flange Taps: Discharge Coefficient, C, for $D = 150$ mm (6 in.)

Diameter Ratio, β	Discharge Coefficient, C, for R_D Equal to											
	5 (10^3)	1 (10^4)	2 (10^4)	3 (10^4)	5 (10^4)	7 (10^4)	1 (10^5)	3 (10^5)	1 (10^6)	1 (10^7)	1 (10^8)	∞
0.10	0.6005	0.5988	0.5978	0.5974	0.5971	0.5969	0.5967	0.5965	0.5963	0.5962	0.5962	0.5962
0.12	0.6012	0.5993	0.5981	0.5977	0.5973	0.5971	0.5969	0.5966	0.5964	0.5963	0.5963	0.5963
0.14	0.6018	0.5998	0.5985	0.5980	0.5975	0.5973	0.5971	0.5967	0.5965	0.5964	0.5964	0.5964
0.16	0.6025	0.6002	0.5988	0.5982	0.5977	0.5975	0.5973	0.5969	0.5966	0.5965	0.5965	0.5965
0.18	0.6033	0.6007	0.5992	0.5986	0.5980	0.5977	0.5975	0.5970	0.5968	0.5967	0.5966	0.5966
0.20	0.6041	0.6013	0.5996	0.5989	0.5983	0.5980	0.5977	0.5972	0.5970	0.5968	0.5968	0.5967
0.22	0.6049	0.6019	0.6000	0.5993	0.5986	0.5983	0.5980	0.5975	0.5972	0.5970	0.5969	0.5969
0.24	0.6057	0.6025	0.6005	0.5997	0.5990	0.5986	0.5983	0.5977	0.5974	0.5972	0.5971	0.5971
0.26	0.6067	0.6032	0.6011	0.6002	0.5994	0.5990	0.5987	0.5980	0.5977	0.5974	0.5974	0.5973
0.28	0.6077	0.6039	0.6016	0.6007	0.5998	0.5994	0.5991	0.5984	0.5980	0.5977	0.5976	0.5975
0.30	0.6088	0.6048	0.6023	0.6013	0.6003	0.5999	0.5995	0.5987	0.5983	0.5980	0.5979	0.5978
0.32	0.6100	0.6056	0.6030	0.6019	0.6009	0.6004	0.6000	0.5991	0.5987	0.5983	0.5982	0.5981
0.34	0.6113	0.6066	0.6037	0.6026	0.6015	0.6009	0.6005	0.5996	0.5990	0.5986	0.5985	0.5984
0.36	0.6127	0.6077	0.6045	0.6033	0.6021	0.6015	0.6010	0.6000	0.5995	0.5990	0.5988	0.5987
0.38	0.6143	0.6088	0.6054	0.6041	0.6028	0.6022	0.6017	0.6006	0.5999	0.5994	0.5992	0.5990
0.40	0.6160	0.6101	0.6064	0.6050	0.6036	0.6029	0.6023	0.6011	0.6004	0.5998	0.5996	0.5994
0.42	0.6178	0.6114	0.6075	0.6059	0.6044	0.6037	0.6030	0.6017	0.6009	0.6002	0.6000	0.5997
0.44	0.6198	0.6128	0.6086	0.6069	0.6053	0.6045	0.6038	0.6023	0.6015	0.6007	0.6004	0.6001
0.46	...	0.6144	0.6098	0.6079	0.6062	0.6053	0.6046	0.6030	0.6020	0.6011	0.6008	0.6005
0.48	...	0.6160	0.6111	0.6091	0.6072	0.6062	0.6054	0.6036	0.6026	0.6016	0.6012	0.6008
0.50	...	0.6178	0.6124	0.6102	0.6082	0.6071	0.6062	0.6043	0.6031	0.6021	0.6016	0.6012
0.51	...	0.6187	0.6131	0.6108	0.6087	0.6076	0.6067	0.6047	0.6034	0.6023	0.6018	0.6013
0.52	...	0.6197	0.6138	0.6114	0.6092	0.6081	0.6071	0.6050	0.6037	0.6025	0.6020	0.6015
0.53	...	0.6206	0.6145	0.6121	0.6097	0.6086	0.6075	0.6054	0.6040	0.6027	0.6021	0.6016
0.54	...	0.6216	0.6153	0.6127	0.6103	0.6090	0.6080	0.6057	0.6042	0.6029	0.6023	0.6017
0.55	...	0.6226	0.6160	0.6133	0.6108	0.6095	0.6084	0.6060	0.6045	0.6031	0.6024	0.6018
0.56	...	0.6237	0.6167	0.6140	0.6113	0.6100	0.6088	0.6063	0.6047	0.6032	0.6025	0.6019
0.57	...	0.6247	0.6175	0.6146	0.6119	0.6105	0.6092	0.6066	0.6050	0.6034	0.6026	0.6020
0.58	...	0.6258	0.6182	0.6152	0.6124	0.6109	0.6096	0.6069	0.6052	0.6035	0.6027	0.6020
0.59	...	0.6269	0.6190	0.6159	0.6129	0.6114	0.6100	0.6072	0.6054	0.6036	0.6028	0.6020
0.60	...	0.6280	0.6198	0.6165	0.6134	0.6118	0.6104	0.6074	0.6055	0.6036	0.6028	0.6020
0.61	...	0.6290	0.6205	0.6171	0.6138	0.6122	0.6107	0.6076	0.6056	0.6037	0.6028	0.6019
0.62	...	0.6301	0.6212	0.6177	0.6143	0.6126	0.6111	0.6078	0.6057	0.6036	0.6027	0.6018
0.63	...	...	0.6219	0.6182	0.6147	0.6129	0.6114	0.6080	0.6058	0.6036	0.6026	0.6016
0.64	...	...	0.6226	0.6188	0.6151	0.6132	0.6116	0.6081	0.6058	0.6035	0.6024	0.6014
0.65	...	...	0.6233	0.6193	0.6155	0.6135	0.6118	0.6081	0.6057	0.6033	0.6022	0.6011
0.66	...	...	0.6239	0.6197	0.6158	0.6138	0.6120	0.6081	0.6056	0.6031	0.6019	0.6008
0.67	...	...	0.6245	0.6202	0.6160	0.6139	0.6121	0.6081	0.6054	0.6028	0.6016	0.6004
0.68	...	...	0.6251	0.6205	0.6162	0.6140	0.6121	0.6079	0.6052	0.6024	0.6011	0.5999
0.69	...	...	0.6256	0.6209	0.6164	0.6141	0.6121	0.6077	0.6049	0.6019	0.6006	0.5993
0.70	...	...	0.6260	0.6211	0.6165	0.6141	0.6120	0.6074	0.6044	0.6014	0.6000	0.5986
0.71	...	...	0.6264	0.6213	0.6165	0.6140	0.6118	0.6071	0.6039	0.6007	0.5993	0.5978
0.72	...	...	0.6267	0.6214	0.6164	0.6138	0.6115	0.6066	0.6033	0.6000	0.5984	0.5969
0.73	...	...	0.6269	0.6214	0.6162	0.6135	0.6111	0.6060	0.6026	0.5991	0.5975	0.5959
0.74	...	...	0.6271	0.6213	0.6159	0.6131	0.6106	0.6053	0.6017	0.5981	0.5964	0.5947
0.75	...	...	0.6271	0.6211	0.6154	0.6125	0.6100	0.6044	0.6007	0.5969	0.5951	0.5934

GENERAL NOTE: This table is given for convenience. The values given are not intended for precise interpolation and extrapolation is not permitted.

Copyright ASME International
Provided by IHS under license with ASME
No reproduction or networking permitted without license from IHS
Not for Resale

Table 2A-7 Orifice Plate With Flange Taps: Discharge Coefficient, C, for $D = 200$ mm (8 in.)

Diameter Ratio, β	Discharge Coefficient, C, for R_D Equal to											
	5 (10^3)	1 (10^4)	2 (10^4)	3 (10^4)	5 (10^4)	7 (10^4)	1 (10^5)	3 (10^5)	1 (10^6)	1 (10^7)	1 (10^8)	∞
0.10	0.6005	0.5989	0.5979	0.5975	0.5971	0.5969	0.5968	0.5965	0.5963	0.5963	0.5962	0.5962
0.12	0.6012	0.5993	0.5982	0.5977	0.5973	0.5971	0.5969	0.5966	0.5964	0.5963	0.5963	0.5963
0.14	0.6019	0.5998	0.5985	0.5980	0.5975	0.5973	0.5971	0.5967	0.5966	0.5964	0.5964	0.5964
0.16	0.6026	0.6003	0.5989	0.5983	0.5978	0.5975	0.5973	0.5969	0.5967	0.5966	0.5965	0.5965
0.18	0.6033	0.6008	0.5993	0.5986	0.5981	0.5978	0.5975	0.5971	0.5969	0.5967	0.5967	0.5967
0.20	0.6041	0.6014	0.5997	0.5990	0.5984	0.5981	0.5978	0.5973	0.5971	0.5969	0.5968	0.5968
0.22	0.6050	0.6020	0.6001	0.5994	0.5987	0.5984	0.5981	0.5976	0.5973	0.5971	0.5970	0.5970
0.24	0.6058	0.6026	0.6006	0.5998	0.5991	0.5987	0.5984	0.5978	0.5975	0.5973	0.5972	0.5972
0.26	0.6068	0.6033	0.6011	0.6003	0.5995	0.5991	0.5988	0.5981	0.5978	0.5975	0.5975	0.5974
0.28	0.6078	0.6041	0.6017	0.6008	0.6000	0.5995	0.5992	0.5985	0.5981	0.5978	0.5977	0.5976
0.30	0.6089	0.6049	0.6024	0.6014	0.6005	0.6000	0.5996	0.5988	0.5984	0.5981	0.5980	0.5979
0.32	0.6101	0.6058	0.6031	0.6020	0.6010	0.6005	0.6001	0.5992	0.5988	0.5984	0.5983	0.5982
0.34	0.6114	0.6067	0.6038	0.6027	0.6016	0.6011	0.6006	0.5997	0.5992	0.5987	0.5986	0.5985
0.36	0.6128	0.6078	0.6047	0.6034	0.6022	0.6017	0.6012	0.6002	0.5996	0.5991	0.5989	0.5988
0.38	0.6144	0.6089	0.6056	0.6042	0.6029	0.6023	0.6018	0.6007	0.6000	0.5995	0.5993	0.5991
0.40	. . .	0.6102	0.6065	0.6051	0.6037	0.6030	0.6024	0.6012	0.6005	0.5999	0.5997	0.5995
0.42	. . .	0.6115	0.6076	0.6060	0.6045	0.6038	0.6031	0.6018	0.6010	0.6003	0.6001	0.5998
0.44	. . .	0.6129	0.6087	0.6070	0.6054	0.6045	0.6038	0.6024	0.6015	0.6008	0.6004	0.6002
0.46	. . .	0.6145	0.6099	0.6080	0.6063	0.6054	0.6046	0.6030	0.6021	0.6012	0.6008	0.6005
0.48	. . .	0.6161	0.6111	0.6091	0.6072	0.6062	0.6054	0.6037	0.6026	0.6016	0.6012	0.6009
0.50	. . .	0.6179	0.6124	0.6102	0.6082	0.6071	0.6062	0.6043	0.6032	0.6021	0.6016	0.6012
0.51	. . .	0.6188	0.6131	0.6108	0.6087	0.6076	0.6067	0.6047	0.6034	0.6023	0.6018	0.6013
0.52	. . .	0.6197	0.6138	0.6114	0.6092	0.6081	0.6071	0.6050	0.6037	0.6025	0.6019	0.6014
0.53	. . .	0.6206	0.6145	0.6120	0.6097	0.6085	0.6075	0.6053	0.6039	0.6026	0.6021	0.6015
0.54	. . .	0.6216	0.6152	0.6126	0.6102	0.6090	0.6079	0.6056	0.6042	0.6028	0.6022	0.6016
0.55	. . .	. . .	0.6159	0.6132	0.6107	0.6094	0.6083	0.6059	0.6044	0.6030	0.6023	0.6017
0.56	. . .	. . .	0.6166	0.6138	0.6112	0.6099	0.6087	0.6062	0.6046	0.6031	0.6024	0.6018
0.57	. . .	. . .	0.6174	0.6145	0.6117	0.6103	0.6091	0.6065	0.6048	0.6032	0.6025	0.6018
0.58	. . .	. . .	0.6181	0.6151	0.6122	0.6107	0.6094	0.6067	0.6050	0.6033	0.6025	0.6018
0.59	. . .	. . .	0.6188	0.6156	0.6127	0.6111	0.6098	0.6070	0.6051	0.6033	0.6025	0.6018
0.60	. . .	. . .	0.6195	0.6162	0.6131	0.6115	0.6101	0.6072	0.6052	0.6034	0.6025	0.6017
0.61	. . .	. . .	0.6202	0.6168	0.6135	0.6119	0.6104	0.6073	0.6053	0.6033	0.6024	0.6016
0.62	. . .	. . .	0.6209	0.6173	0.6139	0.6122	0.6107	0.6075	0.6053	0.6033	0.6023	0.6014
0.63	. . .	. . .	0.6216	0.6178	0.6143	0.6125	0.6109	0.6076	0.6053	0.6032	0.6022	0.6012
0.64	. . .	. . .	0.6222	0.6183	0.6147	0.6128	0.6111	0.6076	0.6053	0.6030	0.6019	0.6009
0.65	. . .	. . .	0.6228	0.6188	0.6150	0.6130	0.6113	0.6076	0.6052	0.6028	0.6016	0.6006
0.66	. . .	. . .	0.6234	0.6192	0.6152	0.6132	0.6114	0.6075	0.6050	0.6025	0.6013	0.6002
0.67	. . .	. . .	0.6239	0.6195	0.6154	0.6133	0.6114	0.6074	0.6047	0.6021	0.6009	0.5997
0.68	. . .	. . .	0.6244	0.6198	0.6155	0.6133	0.6114	0.6072	0.6044	0.6016	0.6003	0.5991
0.69	. . .	. . .	0.6248	0.6201	0.6156	0.6133	0.6112	0.6069	0.6040	0.6011	0.5997	0.5984
0.70	. . .	. . .	0.6252	0.6202	0.6155	0.6131	0.6110	0.6065	0.6035	0.6004	0.5990	0.5976
0.71	. . .	. . .	0.6255	0.6203	0.6154	0.6129	0.6107	0.6060	0.6028	0.5996	0.5982	0.5967
0.72	. . .	. . .	0.6257	0.6203	0.6152	0.6126	0.6103	0.6054	0.6021	0.5988	0.5972	0.5957
0.73	. . .	. . .	0.6258	0.6202	0.6149	0.6122	0.6098	0.6047	0.6012	0.5977	0.5961	0.5945
0.74	. . .	. . .	0.6258	0.6199	0.6145	0.6116	0.6092	0.6038	0.6002	0.5966	0.5949	0.5932
0.75	. . .	. . .	0.6256	0.6196	0.6139	0.6110	0.6084	0.6028	0.5991	0.5953	0.5935	0.5917

GENERAL NOTE: This table is given for convenience. The values given are not intended for precise interpolation and extrapolation is not permitted.

Copyright ASME International
Provided by IHS under license with ASME
No reproduction or networking permitted without license from IHS
Not for Resale

Table 2A-8 Orifice Plate With Flange Taps: Discharge Coefficient, C, for $D = 250$ mm (10 in.)

Diameter Ratio, β	Discharge Coefficient, C, for R_D Equal to											
	5 (10^3)	1 (10^4)	2 (10^4)	3 (10^4)	5 (10^4)	7 (10^4)	1 (10^5)	3 (10^5)	1 (10^6)	1 (10^7)	1 (10^8)	∞
0.10	0.6005	0.5989	0.5979	0.5975	0.5971	0.5969	0.5968	0.5965	0.5964	0.5963	0.5963	0.5963
0.12	0.6012	0.5994	0.5982	0.5977	0.5973	0.5971	0.5970	0.5966	0.5965	0.5964	0.5963	0.5963
0.14	0.6019	0.5998	0.5985	0.5980	0.5976	0.5973	0.5971	0.5968	0.5966	0.5965	0.5965	0.5964
0.16	0.6026	0.6003	0.5989	0.5983	0.5978	0.5976	0.5974	0.5969	0.5967	0.5966	0.5966	0.5966
0.18	0.6034	0.6009	0.5993	0.5987	0.5981	0.5978	0.5976	0.5971	0.5969	0.5968	0.5967	0.5967
0.20	0.6042	0.6014	0.5997	0.5990	0.5984	0.5981	0.5979	0.5974	0.5971	0.5969	0.5969	0.5969
0.22	0.6050	0.6020	0.6002	0.5994	0.5988	0.5984	0.5981	0.5976	0.5973	0.5971	0.5971	0.5971
0.24	0.6059	0.6027	0.6007	0.5999	0.5991	0.5988	0.5985	0.5979	0.5976	0.5974	0.5973	0.5973
0.26	0.6068	0.6034	0.6012	0.6004	0.5996	0.5992	0.5988	0.5982	0.5978	0.5976	0.5975	0.5975
0.28	0.6079	0.6041	0.6018	0.6009	0.6000	0.5996	0.5992	0.5985	0.5981	0.5979	0.5978	0.5977
0.30	0.6090	0.6049	0.6025	0.6015	0.6005	0.6001	0.5997	0.5989	0.5985	0.5982	0.5981	0.5980
0.32	0.6102	0.6058	0.6032	0.6021	0.6011	0.6006	0.6002	0.5993	0.5988	0.5985	0.5984	0.5983
0.34	0.6115	0.6068	0.6039	0.6028	0.6017	0.6011	0.6007	0.5998	0.5992	0.5988	0.5987	0.5986
0.36	...	0.6079	0.6047	0.6035	0.6023	0.6017	0.6012	0.6002	0.5997	0.5992	0.5990	0.5989
0.38	...	0.6090	0.6056	0.6043	0.6030	0.6024	0.6018	0.6007	0.6001	0.5996	0.5994	0.5992
0.40	...	0.6102	0.6066	0.6051	0.6038	0.6031	0.6025	0.6013	0.6006	0.6000	0.5997	0.5995
0.42	...	0.6116	0.6076	0.6061	0.6046	0.6038	0.6032	0.6019	0.6011	0.6004	0.6001	0.5999
0.44	...	0.6130	0.6087	0.6070	0.6054	0.6046	0.6039	0.6025	0.6016	0.6008	0.6005	0.6002
0.46	...	0.6145	0.6099	0.6081	0.6063	0.6054	0.6047	0.6031	0.6021	0.6012	0.6009	0.6006
0.48	...	0.6162	0.6112	0.6091	0.6072	0.6063	0.6055	0.6037	0.6026	0.6017	0.6013	0.6009
0.50	...	...	0.6125	0.6103	0.6082	0.6072	0.6063	0.6044	0.6032	0.6021	0.6016	0.6012
0.51	...	...	0.6131	0.6108	0.6087	0.6076	0.6067	0.6047	0.6034	0.6023	0.6018	0.6013
0.52	...	...	0.6138	0.6114	0.6092	0.6081	0.6071	0.6050	0.6037	0.6024	0.6019	0.6014
0.53	...	...	0.6145	0.6120	0.6097	0.6085	0.6075	0.6053	0.6039	0.6026	0.6021	0.6015
0.54	...	...	0.6152	0.6126	0.6102	0.6089	0.6079	0.6056	0.6041	0.6028	0.6022	0.6016
0.55	...	...	0.6159	0.6132	0.6107	0.6094	0.6083	0.6059	0.6044	0.6029	0.6023	0.6017
0.56	...	...	0.6166	0.6138	0.6112	0.6098	0.6086	0.6061	0.6045	0.6030	0.6023	0.6017
0.57	...	...	0.6173	0.6144	0.6116	0.6102	0.6090	0.6064	0.6047	0.6031	0.6024	0.6017
0.58	...	...	0.6180	0.6150	0.6121	0.6106	0.6093	0.6066	0.6049	0.6032	0.6024	0.6017
0.59	...	...	0.6187	0.6155	0.6125	0.6110	0.6097	0.6068	0.6050	0.6032	0.6024	0.6016
0.60	...	...	0.6194	0.6161	0.6130	0.6114	0.6100	0.6070	0.6051	0.6032	0.6023	0.6015
0.61	...	...	0.6201	0.6166	0.6134	0.6117	0.6103	0.6071	0.6051	0.6031	0.6023	0.6014
0.62	...	...	0.6207	0.6171	0.6138	0.6120	0.6105	0.6072	0.6051	0.6031	0.6021	0.6012
0.63	...	...	0.6214	0.6176	0.6141	0.6123	0.6107	0.6073	0.6051	0.6029	0.6019	0.6010
0.64	...	...	0.6220	0.6181	0.6144	0.6125	0.6109	0.6073	0.6050	0.6027	0.6017	0.6006
0.65	...	...	0.6226	0.6185	0.6147	0.6127	0.6110	0.6073	0.6048	0.6024	0.6013	0.6003
0.66	...	...	0.6231	0.6189	0.6149	0.6128	0.6110	0.6072	0.6046	0.6021	0.6009	0.5998
0.67	...	...	0.6236	0.6192	0.6150	0.6129	0.6110	0.6070	0.6043	0.6017	0.6004	0.5993
0.68	...	...	0.6240	0.6194	0.6151	0.6129	0.6109	0.6067	0.6039	0.6012	0.5999	0.5986
0.69	...	...	...	0.6196	0.6151	0.6128	0.6107	0.6064	0.6035	0.6005	0.5992	0.5979
0.70	...	...	...	0.6197	0.6150	0.6126	0.6105	0.6059	0.6029	0.5998	0.5984	0.5970
0.71	...	...	...	0.6197	0.6148	0.6123	0.6101	0.6054	0.6022	0.5990	0.5975	0.5961
0.72	...	...	...	0.6196	0.6145	0.6119	0.6096	0.6047	0.6014	0.5980	0.5965	0.5950
0.73	...	...	...	0.6194	0.6141	0.6114	0.6090	0.6039	0.6004	0.5969	0.5953	0.5937
0.74	...	...	...	0.6191	0.6136	0.6108	0.6083	0.6029	0.5994	0.5957	0.5940	0.5923
0.75	...	...	...	0.6187	0.6130	0.6100	0.6074	0.6018	0.5981	0.5943	0.5925	0.5908

GENERAL NOTE: This table is given for convenience. The values given are not intended for precise interpolation and extrapolation is not permitted.

Copyright ASME International
Provided by IHS under license with ASME
No reproduction or networking permitted without license from IHS
Not for Resale

Table 2A-9 Orifice Plate With Flange Taps: Discharge Coefficient, C, for $D = 375$ mm (15 in.)

Diameter Ratio, β	Discharge Coefficient, C, for R_D Equal to											
	5 (10^3)	1 (10^4)	2 (10^4)	3 (10^4)	5 (10^4)	7 (10^4)	1 (10^5)	3 (10^5)	1 (10^6)	1 (10^7)	1 (10^8)	∞
0.10	0.6006	0.5989	0.5979	0.5975	0.5971	0.5970	0.5968	0.5965	0.5964	0.5963	0.5963	0.5963
0.12	0.6013	0.5994	0.5982	0.5978	0.5974	0.5972	0.5970	0.5967	0.5965	0.5964	0.5964	0.5964
0.14	0.6020	0.5999	0.5986	0.5981	0.5976	0.5974	0.5972	0.5968	0.5966	0.5965	0.5965	0.5965
0.16	0.6027	0.6004	0.5990	0.5984	0.5979	0.5976	0.5974	0.5970	0.5968	0.5967	0.5966	0.5966
0.18	0.6035	0.6009	0.5994	0.5987	0.5982	0.5979	0.5977	0.5972	0.5970	0.5968	0.5968	0.5968
0.20	0.6042	0.6015	0.5998	0.5991	0.5985	0.5982	0.5979	0.5974	0.5972	0.5970	0.5970	0.5969
0.22	0.6051	0.6021	0.6003	0.5995	0.5988	0.5985	0.5982	0.5977	0.5974	0.5972	0.5972	0.5971
0.24	0.6060	0.6028	0.6008	0.6000	0.5992	0.5989	0.5986	0.5980	0.5977	0.5974	0.5974	0.5973
0.26	0.6069	0.6035	0.6013	0.6005	0.5997	0.5993	0.5989	0.5983	0.5979	0.5977	0.5976	0.5976
0.28	0.6080	0.6042	0.6019	0.6010	0.6001	0.5997	0.5993	0.5986	0.5983	0.5980	0.5979	0.5978
0.30	...	0.6051	0.6026	0.6016	0.6006	0.6002	0.5998	0.5990	0.5986	0.5983	0.5982	0.5981
0.32	...	0.6060	0.6033	0.6022	0.6012	0.6007	0.6003	0.5994	0.5990	0.5986	0.5985	0.5984
0.34	...	0.6069	0.6040	0.6029	0.6018	0.6013	0.6008	0.5999	0.5994	0.5989	0.5988	0.5987
0.36	...	0.6080	0.6049	0.6036	0.6024	0.6019	0.6014	0.6004	0.5998	0.5993	0.5991	0.5990
0.38	...	0.6091	0.6058	0.6044	0.6031	0.6025	0.6020	0.6009	0.6002	0.5997	0.5995	0.5993
0.40	...	...	0.6067	0.6053	0.6039	0.6032	0.6026	0.6014	0.6007	0.6001	0.5999	0.5997
0.42	...	...	0.6078	0.6062	0.6047	0.6039	0.6033	0.6020	0.6012	0.6005	0.6002	0.6000
0.44	...	...	0.6089	0.6071	0.6055	0.6047	0.6040	0.6026	0.6017	0.6009	0.6006	0.6003
0.46	...	...	0.6100	0.6082	0.6064	0.6055	0.6048	0.6032	0.6022	0.6013	0.6010	0.6007
0.48	...	...	0.6113	0.6092	0.6073	0.6064	0.6055	0.6038	0.6027	0.6018	0.6013	0.6010
0.50	...	...	0.6125	0.6103	0.6083	0.6072	0.6063	0.6044	0.6032	0.6021	0.6017	0.6012
0.51	...	...	0.6132	0.6109	0.6088	0.6077	0.6067	0.6047	0.6035	0.6023	0.6018	0.6014
0.52	...	...	0.6139	0.6115	0.6092	0.6081	0.6071	0.6050	0.6037	0.6025	0.6019	0.6015
0.53	...	...	0.6145	0.6121	0.6097	0.6085	0.6075	0.6053	0.6039	0.6026	0.6021	0.6015
0.54	...	...	0.6152	0.6126	0.6102	0.6090	0.6079	0.6056	0.6041	0.6028	0.6022	0.6016
0.55	...	...	0.6159	0.6132	0.6107	0.6094	0.6082	0.6058	0.6043	0.6029	0.6022	0.6017
0.56	...	...	0.6166	0.6138	0.6111	0.6098	0.6086	0.6061	0.6045	0.6030	0.6023	0.6017
0.57	...	...	...	0.6144	0.6116	0.6102	0.6089	0.6063	0.6047	0.6030	0.6023	0.6017
0.58	...	...	...	0.6149	0.6120	0.6106	0.6093	0.6065	0.6048	0.6031	0.6023	0.6016
0.59	...	...	...	0.6155	0.6124	0.6109	0.6096	0.6067	0.6049	0.6031	0.6023	0.6015
0.60	...	...	...	0.6160	0.6128	0.6112	0.6098	0.6069	0.6049	0.6030	0.6022	0.6014
0.61	...	...	...	0.6165	0.6132	0.6116	0.6101	0.6070	0.6050	0.6030	0.6021	0.6012
0.62	...	...	...	0.6170	0.6136	0.6118	0.6103	0.6070	0.6049	0.6028	0.6019	0.6010
0.63	...	...	...	0.6174	0.6139	0.6121	0.6105	0.6071	0.6048	0.6026	0.6017	0.6007
0.64	...	...	...	0.6178	0.6141	0.6122	0.6106	0.6070	0.6047	0.6024	0.6014	0.6003
0.65	...	...	...	0.6182	0.6143	0.6124	0.6106	0.6069	0.6045	0.6021	0.6010	0.5999
0.66	...	...	...	0.6185	0.6145	0.6124	0.6106	0.6068	0.6042	0.6017	0.6005	0.5994
0.67	...	...	...	0.6188	0.6146	0.6124	0.6106	0.6065	0.6039	0.6012	0.6000	0.5988
0.68	...	...	...	0.6190	0.6146	0.6124	0.6104	0.6062	0.6034	0.6006	0.5993	0.5981
0.69	...	...	...	...	0.6145	0.6122	0.6102	0.6058	0.6029	0.6000	0.5986	0.5973
0.70	...	...	...	...	0.6144	0.6120	0.6098	0.6053	0.6022	0.5992	0.5977	0.5964
0.71	...	...	...	...	0.6141	0.6116	0.6094	0.6046	0.6015	0.5982	0.5968	0.5953
0.72	...	...	...	...	0.6138	0.6111	0.6088	0.6039	0.6006	0.5972	0.5956	0.5941
0.73	...	...	...	...	0.6133	0.6105	0.6081	0.6029	0.5995	0.5960	0.5944	0.5928
0.74	...	...	...	...	0.6126	0.6098	0.6073	0.6019	0.5983	0.5946	0.5929	0.5913
0.75	...	...	...	...	0.6119	0.6089	0.6063	0.6007	0.5969	0.5931	0.5913	0.5896

GENERAL NOTE: This table is given for convenience. The values given are not intended for precise interpolation and extrapolation is not permitted.

Copyright ASME International
Provided by IHS under license with ASME
No reproduction or networking permitted without license from IHS
Not for Resale

Table 2A-10 Orifice Plate With Flange Taps: Discharge Coefficient, C, for $D = 760$ mm (30 in.)

Diameter Ratio, β	Discharge Coefficient, C, for R_D Equal to											
	5 (10^3)	1 (10^4)	2 (10^4)	3 (10^4)	5 (10^4)	7 (10^4)	1 (10^5)	3 (10^5)	1 (10^6)	1 (10^7)	1 (10^8)	∞
0.10	0.6006	0.5990	0.5979	0.5975	0.5972	0.5970	0.5969	0.5966	0.5964	0.5963	0.5963	0.5963
0.12	0.6013	0.5994	0.5983	0.5978	0.5974	0.5972	0.5970	0.5967	0.5965	0.5964	0.5964	0.5964
0.14	0.6020	0.5999	0.5986	0.5981	0.5977	0.5974	0.5972	0.5969	0.5967	0.5966	0.5966	0.5965
0.16	0.6028	0.6005	0.5990	0.5985	0.5979	0.5977	0.5975	0.5971	0.5969	0.5967	0.5967	0.5967
0.18	0.6035	0.6010	0.5994	0.5988	0.5982	0.5980	0.5977	0.5973	0.5970	0.5969	0.5969	0.5968
0.20	...	0.6016	0.5999	0.5992	0.5986	0.5983	0.5980	0.5975	0.5973	0.5971	0.5971	0.5970
0.22	...	0.6022	0.6004	0.5996	0.5989	0.5986	0.5983	0.5978	0.5975	0.5973	0.5973	0.5972
0.24	...	0.6029	0.6009	0.6001	0.5993	0.5990	0.5987	0.5981	0.5978	0.5976	0.5975	0.5975
0.26	...	0.6036	0.6014	0.6006	0.5998	0.5994	0.5991	0.5984	0.5981	0.5978	0.5977	0.5977
0.28	...	...	0.6020	0.6011	0.6003	0.5998	0.5995	0.5988	0.5984	0.5981	0.5980	0.5980
0.30	...	...	0.6027	0.6017	0.6008	0.6003	0.5999	0.5992	0.5987	0.5984	0.5983	0.5982
0.32	...	...	0.6034	0.6023	0.6013	0.6008	0.6004	0.5996	0.5991	0.5987	0.5986	0.5985
0.34	...	...	0.6042	0.6030	0.6020	0.6014	0.6010	0.6000	0.5995	0.5991	0.5990	0.5988
0.36	...	...	0.6050	0.6038	0.6026	0.6020	0.6015	0.6005	0.5999	0.5995	0.5993	0.5992
0.38	...	...	0.6059	0.6046	0.6033	0.6027	0.6021	0.6010	0.6004	0.5999	0.5997	0.5995
0.40	...	...	...	0.6054	0.6041	0.6034	0.6028	0.6016	0.6009	0.6003	0.6000	0.5998
0.42	...	...	...	0.6064	0.6049	0.6041	0.6035	0.6022	0.6014	0.6007	0.6004	0.6002
0.44	...	...	...	0.6073	0.6057	0.6049	0.6042	0.6027	0.6019	0.6011	0.6008	0.6005
0.46	...	...	...	0.6084	0.6066	0.6057	0.6049	0.6034	0.6024	0.6015	0.6012	0.6008
0.48	...	...	...	0.6094	0.6075	0.6065	0.6057	0.6040	0.6029	0.6019	0.6015	0.6011
0.50	...	...	...	...	0.6084	0.6074	0.6065	0.6046	0.6034	0.6023	0.6018	0.6014
0.51	...	...	...	...	0.6089	0.6078	0.6069	0.6049	0.6036	0.6025	0.6020	0.6015
0.52	...	...	...	...	0.6094	0.6082	0.6073	0.6052	0.6039	0.6026	0.6021	0.6016
0.53	...	...	...	...	0.6099	0.6087	0.6076	0.6054	0.6041	0.6028	0.6022	0.6017
0.54	...	...	...	...	0.6103	0.6091	0.6080	0.6057	0.6043	0.6029	0.6023	0.6017
0.55	...	...	...	...	0.6108	0.6095	0.6084	0.6060	0.6044	0.6030	0.6024	0.6018
0.56	...	...	...	...	0.6112	0.6099	0.6087	0.6062	0.6046	0.6031	0.6024	0.6018
0.57	...	...	...	...	0.6117	0.6103	0.6090	0.6064	0.6047	0.6031	0.6024	0.6017
0.58	...	...	...	...	0.6121	0.6106	0.6093	0.6066	0.6048	0.6031	0.6024	0.6017
0.59	...	...	...	...	0.6125	0.6110	0.6096	0.6068	0.6049	0.6031	0.6023	0.6016
0.60	...	...	...	...	0.6129	0.6113	0.6099	0.6069	0.6050	0.6031	0.6022	0.6014
0.61	...	...	...	...	0.6132	0.6116	0.6101	0.6070	0.6050	0.6030	0.6021	0.6012
0.62	...	...	...	...	0.6136	0.6118	0.6103	0.6070	0.6049	0.6028	0.6019	0.6010
0.63	...	...	...	...	...	0.6120	0.6104	0.6070	0.6048	0.6026	0.6016	0.6006
0.64	...	...	...	...	...	0.6122	0.6105	0.6069	0.6046	0.6023	0.6013	0.6003
0.65	...	...	...	...	...	0.6123	0.6105	0.6068	0.6044	0.6020	0.6009	0.5998
0.66	...	...	...	...	...	0.6123	0.6105	0.6066	0.6041	0.6015	0.6004	0.5992
0.67	...	...	...	...	...	0.6123	0.6104	0.6063	0.6037	0.6010	0.5998	0.5986
0.68	...	...	...	...	...	0.6122	0.6102	0.6060	0.6032	0.6004	0.5991	0.5979
0.69	...	...	...	...	...	0.6119	0.6099	0.6055	0.6026	0.5996	0.5983	0.5970
0.70	...	...	...	...	...	0.6116	0.6095	0.6049	0.6019	0.5988	0.5974	0.5960
0.71	...	...	...	...	...	0.6112	0.6090	0.6042	0.6010	0.5978	0.5963	0.5949
0.72	...	...	...	...	...	0.6107	0.6084	0.6034	0.6001	0.5967	0.5951	0.5936
0.73	...	...	...	...	...	0.6100	0.6076	0.6024	0.5989	0.5954	0.5938	0.5922
0.74	...	...	...	...	...	...	0.6067	0.6012	0.5976	0.5940	0.5923	0.5906
0.75	...	...	...	...	...	...	0.6056	0.5999	0.5962	0.5923	0.5906	0.5888

GENERAL NOTE: This table is given for convenience. The values given are not intended for precise interpolation and extrapolation is not permitted.

Copyright ASME International
Provided by IHS under license with ASME
No reproduction or networking permitted without license from IHS
Not for Resale

Table 2A-11 Orifice Plate With Flange Taps: Discharge Coefficient, C, for $D = 1\,000$ mm (40 in.)

Diameter Ratio, β	Discharge Coefficient, C, for R_D Equal to											
	5 (10^3)	1 (10^4)	2 (10^4)	3 (10^4)	5 (10^4)	7 (10^4)	1 (10^5)	3 (10^5)	1 (10^6)	1 (10^7)	1 (10^8)	∞
0.10	0.6006	0.5990	0.5980	0.5976	0.5972	0.5970	0.5969	0.5966	0.5964	0.5963	0.5963	0.5963
0.12	0.6013	0.5994	0.5983	0.5978	0.5974	0.5972	0.5970	0.5967	0.5966	0.5965	0.5964	0.5964
0.14	0.6020	0.5999	0.5987	0.5981	0.5977	0.5974	0.5973	0.5969	0.5967	0.5966	0.5966	0.5966
0.16	0.6028	0.6005	0.5990	0.5985	0.5980	0.5977	0.5975	0.5971	0.5969	0.5967	0.5967	0.5967
0.18	. . .	0.6010	0.5995	0.5988	0.5983	0.5980	0.5977	0.5973	0.5971	0.5969	0.5969	0.5969
0.20	. . .	0.6016	0.5999	0.5992	0.5986	0.5983	0.5980	0.5975	0.5973	0.5971	0.5971	0.5971
0.22	. . .	0.6022	0.6004	0.5996	0.5990	0.5986	0.5984	0.5978	0.5975	0.5973	0.5973	0.5973
0.24	. . .	0.6029	0.6009	0.6001	0.5994	0.5990	0.5987	0.5981	0.5978	0.5976	0.5975	0.5975
0.26	. . .	. . .	0.6015	0.6006	0.5998	0.5994	0.5991	0.5984	0.5981	0.5979	0.5978	0.5977
0.28	. . .	. . .	0.6021	0.6012	0.6003	0.5999	0.5995	0.5988	0.5984	0.5981	0.5981	0.5980
0.30	. . .	. . .	0.6027	0.6017	0.6008	0.6004	0.6000	0.5992	0.5988	0.5985	0.5983	0.5983
0.32	. . .	. . .	0.6035	0.6024	0.6014	0.6009	0.6005	0.5996	0.5992	0.5988	0.5987	0.5986
0.34	. . .	. . .	0.6043	0.6031	0.6020	0.6015	0.6010	0.6001	0.5996	0.5991	0.5990	0.5989
0.36	. . .	. . .	. . .	0.6038	0.6027	0.6021	0.6016	0.6006	0.6000	0.5995	0.5994	0.5992
0.38	. . .	. . .	. . .	0.6046	0.6034	0.6027	0.6022	0.6011	0.6005	0.5999	0.5997	0.5995
0.40	. . .	. . .	. . .	0.6055	0.6041	0.6034	0.6028	0.6016	0.6009	0.6003	0.6001	0.5999
0.42	. . .	. . .	. . .	0.6064	0.6049	0.6042	0.6035	0.6022	0.6014	0.6007	0.6005	0.6002
0.44	. . .	. . .	. . .	. . .	0.6058	0.6050	0.6043	0.6028	0.6019	0.6012	0.6009	0.6006
0.46	. . .	. . .	. . .	. . .	0.6067	0.6058	0.6050	0.6034	0.6024	0.6016	0.6012	0.6009
0.48	. . .	. . .	. . .	. . .	0.6076	0.6066	0.6058	0.6040	0.6030	0.6020	0.6016	0.6012
0.50	. . .	. . .	. . .	. . .	0.6085	0.6075	0.6065	0.6046	0.6035	0.6024	0.6019	0.6015
0.51	. . .	. . .	. . .	. . .	0.6090	0.6079	0.6069	0.6049	0.6037	0.6025	0.6020	0.6016
0.52	. . .	. . .	. . .	. . .	0.6095	0.6083	0.6073	0.6052	0.6039	0.6027	0.6022	0.6017
0.53	. . .	. . .	. . .	. . .	0.6099	0.6087	0.6077	0.6055	0.6041	0.6028	0.6023	0.6017
0.54	. . .	. . .	. . .	. . .	0.6104	0.6091	0.6081	0.6058	0.6043	0.6030	0.6024	0.6018
0.55	. . .	. . .	. . .	. . .	. . .	0.6096	0.6084	0.6060	0.6045	0.6031	0.6024	0.6018
0.56	. . .	. . .	. . .	. . .	. . .	0.6099	0.6088	0.6063	0.6047	0.6031	0.6025	0.6018
0.57	. . .	. . .	. . .	. . .	. . .	0.6103	0.6091	0.6065	0.6048	0.6032	0.6025	0.6018
0.58	. . .	. . .	. . .	. . .	. . .	0.6107	0.6094	0.6067	0.6049	0.6032	0.6024	0.6017
0.59	. . .	. . .	. . .	. . .	. . .	0.6110	0.6097	0.6068	0.6050	0.6032	0.6024	0.6016
0.60	. . .	. . .	. . .	. . .	. . .	0.6113	0.6099	0.6069	0.6050	0.6031	0.6023	0.6015
0.61	. . .	. . .	. . .	. . .	. . .	0.6116	0.6102	0.6070	0.6050	0.6030	0.6021	0.6013
0.62	. . .	. . .	. . .	. . .	. . .	0.6119	0.6103	0.6071	0.6049	0.6029	0.6019	0.6010
0.63	. . .	. . .	. . .	. . .	. . .	0.6121	0.6105	0.6070	0.6048	0.6026	0.6016	0.6007
0.64	. . .	. . .	. . .	. . .	. . .	0.6122	0.6106	0.6070	0.6047	0.6023	0.6013	0.6003
0.65	. . .	. . .	. . .	. . .	. . .	. . .	0.6106	0.6068	0.6044	0.6020	0.6009	0.5998
0.66	. . .	. . .	. . .	. . .	. . .	. . .	0.6105	0.6066	0.6041	0.6016	0.6004	0.5993
0.67	. . .	. . .	. . .	. . .	. . .	. . .	0.6104	0.6063	0.6037	0.6010	0.5998	0.5986
0.68	. . .	. . .	. . .	. . .	. . .	. . .	0.6102	0.6060	0.6032	0.6004	0.5991	0.5979
0.69	. . .	. . .	. . .	. . .	. . .	. . .	0.6099	0.6055	0.6026	0.5997	0.5983	0.5970
0.70	. . .	. . .	. . .	. . .	. . .	. . .	0.6095	0.6049	0.6019	0.5988	0.5974	0.5960
0.71	. . .	. . .	. . .	. . .	. . .	. . .	0.6090	0.6042	0.6010	0.5978	0.5963	0.5949
0.72	. . .	. . .	. . .	. . .	. . .	. . .	0.6084	0.6033	0.6000	0.5967	0.5951	0.5936
0.73	. . .	. . .	. . .	. . .	. . .	. . .	0.6076	0.6024	0.5989	0.5954	0.5938	0.5922
0.74	. . .	. . .	. . .	. . .	. . .	. . .	0.6066	0.6012	0.5976	0.5939	0.5922	0.5906
0.75	. . .	. . .	. . .	. . .	. . .	. . .	0.6055	0.5999	0.5961	0.5923	0.5905	0.5887

GENERAL NOTE: This table is given for convenience. The values given are not intended for precise interpolation and extrapolation is not permitted.

Copyright ASME International
Provided by IHS under license with ASME
No reproduction or networking permitted without license from IHS
Not for Resale

Table 2A-12 Orifice Plates: Expansibility Factor, ε (Y)

Diameter Ratio		Expansibility Factor, ε (Y), for p_2/p_1 Equal to								
β	β^4	1.00	0.98	0.96	0.94	0.92	0.90	0.85	0.80	0.75
					for $\kappa = 1.2$					
0.0000	0.0000	1.0000	0.9941	0.9883	0.9824	0.9764	0.9705	0.9555	0.9404	0.9252
0.5623	0.1000	1.0000	0.9936	0.9871	0.9806	0.9741	0.9676	0.9511	0.9345	0.9177
0.6687	0.2000	1.0000	0.9927	0.9853	0.9779	0.9705	0.9631	0.9443	0.9254	0.9063
0.7401	0.3000	1.0000	0.9915	0.9829	0.9743	0.9657	0.9570	0.9352	0.9132	0.8910
0.7500	0.3164	1.0000	0.9912	0.9824	0.9736	0.9648	0.9559	0.9335	0.9109	0.8881
					for $\kappa = 1.3$					
0.0000	0.0000	1.0000	0.9946	0.9891	0.9837	0.9782	0.9727	0.9588	0.9446	0.9303
0.5623	0.1000	1.0000	0.9940	0.9881	0.9821	0.9760	0.9700	0.9547	0.9391	0.9234
0.6687	0.2000	1.0000	0.9932	0.9864	0.9796	0.9727	0.9658	0.9484	0.9307	0.9128
0.7401	0.3000	1.0000	0.9921	0.9842	0.9762	0.9682	0.9602	0.9399	0.9193	0.8985
0.7500	0.3164	1.0000	0.9919	0.9838	0.9756	0.9674	0.9591	0.9383	0.9172	0.8958
					for $\kappa = 1.4$					
0.0000	0.0000	1.0000	0.9950	0.9899	0.9848	0.9797	0.9746	0.9615	0.9483	0.9348
0.5623	0.1000	1.0000	0.9945	0.9889	0.9833	0.9777	0.9720	0.9577	0.9431	0.9283
0.6687	0.2000	1.0000	0.9937	0.9874	0.9810	0.9746	0.9681	0.9518	0.9353	0.9184
0.7401	0.3000	1.0000	0.9927	0.9853	0.9779	0.9704	0.9629	0.9439	0.9246	0.9050
0.7500	0.3164	1.0000	0.9925	0.9849	0.9773	0.9696	0.9619	0.9424	0.9226	0.9025
					for $\kappa = 1.66$					
0.0000	0.0000	1.0000	0.9958	0.9915	0.9872	0.9828	0.9784	0.9673	0.9559	0.9442
0.5623	0.1000	1.0000	0.9953	0.9906	0.9859	0.9811	0.9763	0.9640	0.9515	0.9386
0.6687	0.2000	1.0000	0.9947	0.9893	0.9839	0.9785	0.9730	0.9590	0.9447	0.9301
0.7401	0.3000	1.0000	0.9938	0.9876	0.9813	0.9749	0.9685	0.9523	0.9357	0.9186
0.7500	0.3164	1.0000	0.9936	0.9872	0.9808	0.9743	0.9677	0.9510	0.9340	0.9164

Copyright ASME International
Provided by IHS under license with ASME
No reproduction or networking permitted without license from IHS
Not for Resale

Part 3
Nozzles and Venturi Nozzles

3-1 SCOPE AND FIELD OF APPLICATION

Part 3 specifies the geometry and method of use (installation and operating conditions) of nozzles and venturi nozzles when they are inserted in a conduit running full to determine the flow-rate of the fluid flowing in the conduit.

It also provides background information for calculating the flow rate and should be applied in conjunction with the requirements given in Part 1 of this Standard, which contains general material applying to all the devices covered by this Standard, orifice plates, nozzles, and venturi tubes.

Part 3 applies only to nozzles and venturi nozzles in which the flow can be considered as single phase and remains subsonic throughout the measuring section and is steady or varies only slowly with time. It does not apply to the measurement of pulsating flow. In addition, each of these devices can only be used within specified limits of pipe size and Reynolds number. Thus Part 3 cannot be used for nominal pipe sizes less than 50 mm (2 in.), or more than 1 200 mm (48 in.), or for pipe Reynolds numbers below 10 000.

Part 3 addresses the ISA 1932 nozzle and the long radius nozzle, as well as with the venturi nozzle. The ISA 1932 and the long radius nozzles are fundamentally different and are described separately in this document. The venturi nozzle has the same upstream face as the ISA 1932 nozzle, but has a divergent section and, therefore, a different location for the downstream pressure taps. This design has a lower pressure loss than a nozzle with a similar geometry. For both of these nozzle types and for the venturi nozzle, direct calibration experiments have been made of sufficient quality, number, and data coverage to allow provision of coefficients within predictable limits of uncertainty and coherent systems of application.

3-2 REFERENCES AND RELATED DOCUMENTS

Normative references and definitions used within this document are contained in Part 1 of this Standard as are the associated symbols, subscripts, and definitions. References for this Part are listed below.

ISO/TR 3313:1998, Measurement of Fluid Flow in Closed Conduits—Guidelines on the Effects of Flow Pulsations on Flow-Measurement Instruments

ISO 4288:1996, Geometrical Product Specification (GPS)—Surface Texture: Profile Method—Rules and Procedures for the Assessment of Surface Texture

ISO/TR 5168:1998, Measurement of Fluid Flow—Evaluation of Uncertainties

ISO/TR 9464:1998, Guidelines for the Use of ISO 5167-1:1991

Publisher: International Organization for Standardization (ISO), 1 rue de Varembe, Case Postale 56, CH-1211, Geneve 20, Switzerland/Suisse

3-3 PRINCIPLES OF THE METHOD OF MEASUREMENT AND COMPUTATION

The principle of the method of measurement is based on the installation of a nozzle or venturi nozzle into a pipeline in which a fluid is running full. The installation of the primary device causes a static pressure difference between the upstream side and the throat. Given the same conditions of use, whenever the device is geometrically similar to one on which direct calibration has been made, the rate of flow can be determined from the measured value of this pressure difference and from a knowledge of the fluid conditions.

The mass rate of flow can be determined by the following equation:

(SI Units)

$$q_m = \frac{C}{\sqrt{1-\beta^4}}\ \varepsilon\ \frac{\pi}{4}\ d^2\ \sqrt{2\Delta p \rho_1} \tag{3-1}$$

(U.S. Customary Units)

$$q_m = 0.09970190 C Y d^2 \sqrt{\frac{h_w \rho_1}{1-\beta^4}}$$

Δp (h_w) represents the differential pressure, as defined in Part 1 of this Standard. The diameters d and D mentioned in Eq. (3-1) are the values of the diameters at the working conditions. Measurements taken at any other conditions must be corrected for any expansion or contraction of the primary device and the pipe due to the temperature and pressure of the fluid during measurement.

The value of the volume rate of flow can be simply calculated since

$$q_v = \frac{q_m}{\rho} \tag{3-2}$$

where

ρ = fluid density at the temperature and pressure for which the volume is stated

Copyright ASME International
Provided by IHS under license with ASME
No reproduction or networking permitted without license from IHS
Not for Resale

The uncertainty limits can be calculated using the procedure given in para. 1-7 of this Standard.

Computation for flow rate is performed by replacing the different terms on the right-hand side of Eq. (3-1) by their numeric values. It is necessary to know the density and the viscosity of the fluid at the working conditions. In the case of a compressible fluid, it is also necessary to know the isentropic exponent of the fluid at the working conditions. Tables 3A-1 through 3A-3 give the values of C as a function of β. Table 3A-4 gives expansibility factors, ε (Y), for different working conditions. These tables are not intended for precise interpolation and extrapolation is not permitted. The coefficient of discharge, C, may be dependent on R_D, which is itself dependent on q_m and is obtained by iteration (see Part 1 of this Standard for guidance regarding the choice of the iteration procedure and initial estimates).

3-4 NOZZLES AND VENTURI NOZZLES

This Standard addresses three nozzle designs:

(a) the ISA 1932 nozzle (given in para. 3-4.1)

(b) the long radius nozzle (given in para. 3-4.2)

(c) the Venturi nozzle (given in para. 3-4.3)

The ISA 1932 nozzle and the long radius nozzle are fundamentally different; the Venturi nozzle has the

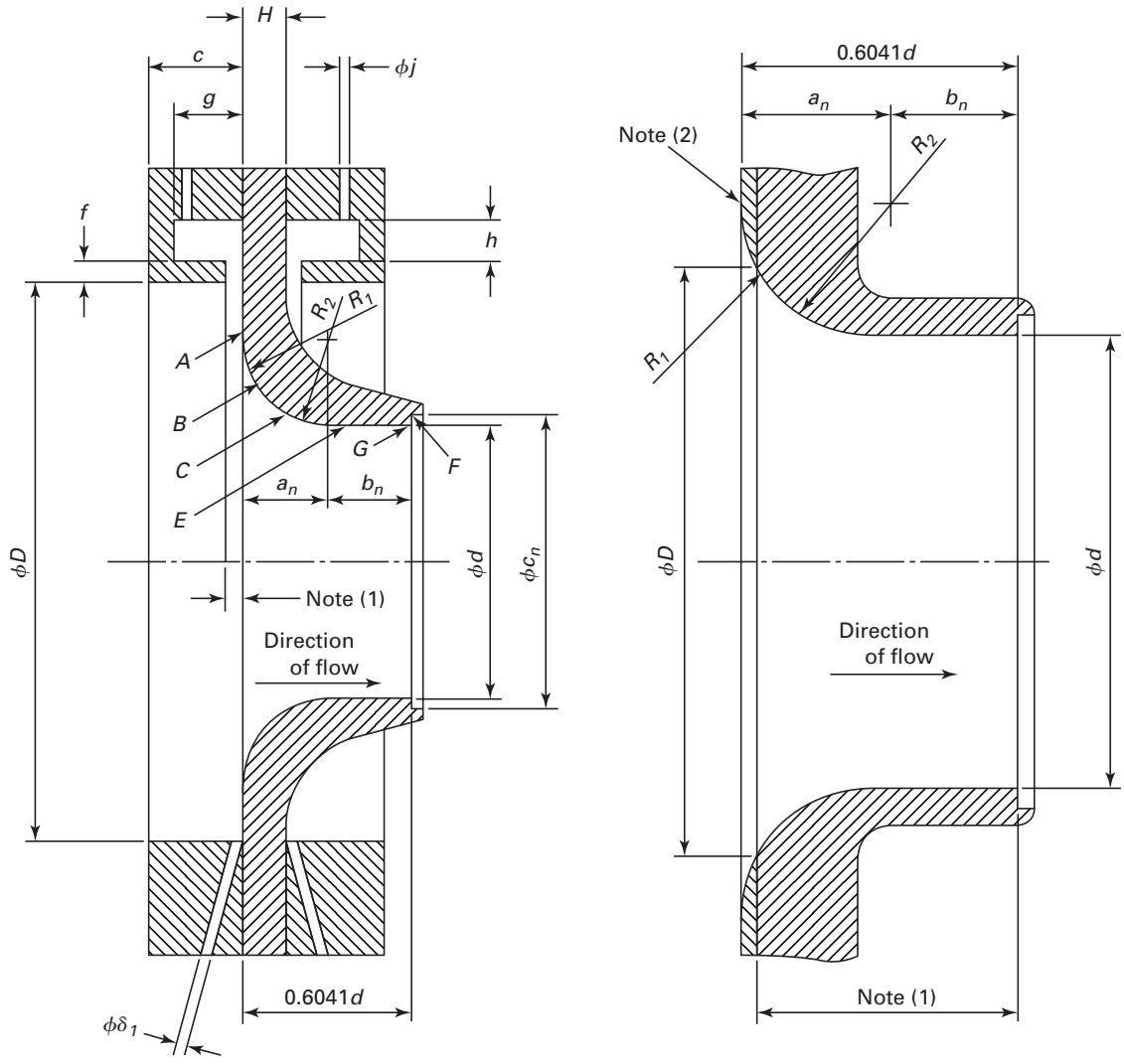

(a) $d \leq (2/3)D$ **(b) $d > (2/3)D$**

NOTES:
(1) See para. 3-4.1.2(g).
(2) Portion to be machined off.

Fig. 3-1 ISA 1932 Nozzle

Copyright ASME International
Provided by IHS under license with ASME
No reproduction or networking permitted without license from IHS
Not for Resale

same inlet design as the ISA 1932 nozzle, but has a divergent section and, therefore, a different location for the downstream pressure taps. This design has a lower pressure loss than the ISA 1932 nozzle and the long radius nozzle. Limits of use for all three types are given in paras. 3-4.1.6.1, 3-4.2.6.1 and 3-4.3.4.1.

3-4.1 ISA 1932 Nozzle

3-4.1.1 General Shape. The part of the nozzle inside the pipe is circular. The nozzle consists of a convergent section, rounded profile, and a cylindrical throat. Figure 3-1 shows the cross-section of an ISA 1932 nozzle at a plane passing through the centerline of the throat. The letters in the following text refer to those shown on Fig. 3-1.

3-4.1.2 Nozzle Profile

(a) The profile of the nozzle can be characterized by a flat inlet part, A, perpendicular to the centerline; a convergent section defined by two arcs of circumference, B and C; a cylindrical throat, E; and a recess, F. The recess, F is optional; in some instances, it may prevent damage to the edge, G.

(b) The flat inlet part, A is limited by a circumference centered on the axis of revolution, with a diameter of $1.5d$, and by the inside circumference of the pipe, of diameter D. When $d = 0.6667D$, the radial width of this flat part is zero.

When d is greater than $0.6667D$, the upstream face of the nozzle does not include a flat inlet part within the pipe. In this case, the nozzle is manufactured as if D is greater than $1.5d$ and the inlet flat part is then faced off so that the largest diameter of the convergent profile is just equal to D [see para. 3-4.1.2(g) and Fig. 4-1, sketch (b)].

(c) The arc of circumference, B is tangential to the flat inlet part, A when $d < 0.6667D$, while its radius,

(1) $R_1 = 0.2d \pm 0.02d$ for $\beta < 0.5$

(2) $R_1 = 0.2d \pm 0.006d$ for $\beta \geq 0.5$

Its center is located $0.2d$ from the inlet plane and $0.75d$ from the axial centerline.

(d) The arc of circumference, C is tangential to the arc of circumference, B and to the throat, E. Its radius,

(1) $R_2 = d/3 \pm 0.033d$ for $\beta < 0.5$

(2) $R_2 = d/3 \pm 0.01d$ for $\beta \geq 0.5$

Its center is located $5d/6$ (i.e., $d/2 + d/3$) from the axial centerline and at

$$a_n = \frac{12 + \sqrt{39}}{60}\, d = 0.3041d \qquad (3\text{-}3)$$

from the flat inlet part, A.

(e) The throat, E has a diameter, d, and a length $b_n = 0.3d$.

The value of the diameter of the throat shall be taken as the mean of the measurements of at least four diameters distributed in axial planes and at approximately equal angles to each other. The throat shall be cylindrical. No diameter of any cross-section shall differ by more than 0.05% from the value of the mean diameter.

(f) The recess, F has a diameter c_n equal to at least $1.06d$ and a length no greater than $0.03d$. The ratio of the height $(c_n - d)/2$ of the recess to its axial length shall not be greater than 1.2.

The outlet edge, G shall be sharp.

(g) The total length of the nozzle, excluding the recess, F, as a function of β is equal to $0.6041d$ for $0.3 \leq \beta \leq 0.6667$ and for $0.6667 < \beta \leq 0.8$

$$\left[0.4041 + \left(\frac{0.75}{\beta} - \frac{0.25}{\beta^2} - 0.5225\right)^{0.5}\right]d \qquad (3\text{-}4)$$

(h) The profile of the convergent inlet shall be checked by means of a template. Two diameters of the convergent inlet in the same plane perpendicular to the axial centerline shall not differ from each other by more than 0.1% of their mean value.

(i) The surface of the upstream face and the throat shall be polished such that they have a roughness criterion, $R_a \leq 10^{-4}\, d$.

3-4.1.3 Downstream Face

(a) The thickness, H shall not exceed $0.1D$.

(b) Apart from the above condition, the profile and the surface finish of the downstream face are not specified (see para. 3-4.1.1).

3-4.1.4 Material and Manufacture. The ISA 1932 nozzle can be manufactured from any material and in any way, provided that it remains in accordance with the foregoing description during flow measurement.

3-4.1.5 Pressure Taps

(a) Corner pressure taps shall be used upstream of the nozzle. The upstream pressure taps can be either single taps or annular slots. Both types of tap can be located either in the pipe or its flanges or in carrier rings as shown in Fig. 3-1.

The spacing between the centerlines of individual upstream taps and face, A is equal to half the diameter of the taps themselves, so that the tap holes break through the wall flush with face, A. The centerline of individual upstream taps shall meet the centerline of the primary device at an angle of 90 deg ± 3 deg.

The diameter, δ_1, of a single upstream tap and the width, a, of annular slots are specified below. The minimum diameter is determined in practice by the need to prevent blockage and to give satisfactory performance.

(1) clean fluids and gases

(a) for $\beta \leq 0.65$, $0.005D \leq a$ or $\delta_1 \leq 0.03D$

(b) for $\beta > 0.65$, $0.01D \leq a$ or $\delta_1 \leq 0.02D$

(2) any value of β

(a) for clean fluids, 1 mm (0.04 in.) $\leq a$ or $\delta_1 \leq 10$ mm (0.40 in.)

(b) for gases, in the case of annular chambers, 1 mm (0.04 in.) $\leq a \leq 10$ mm (0.40 in.)

(c) for gases and for liquefied gases, in the case of single taps, 4 mm (0.15 in.) $\leq \delta_1 \leq 10$ mm (0.40 in.)

The annular slots shall break through the inside wall of the pipe over the entire perimeter, with no break in continuity. If this is not possible, each annular chamber

Copyright ASME International
Provided by IHS under license with ASME
No reproduction or networking permitted without license from IHS Not for Resale

shall connect with the inside of the pipe by at least four openings, the axes of which are at equal angles to one another, and the individual opening area of which is least 12 mm^2 (0.019 in.^{2}).

The internal diameter, b, of the carrier ring shall be greater than or equal to the diameter, D, of the pipe, to ensure that they do not protrude into the pipe, but shall be less than or equal to $1.04D$. Furthermore, the following condition shall be met:

$$\frac{b - D}{D} \times \frac{c}{D} \times 100 \leq \frac{0.1}{0.1 + 2.3\beta^4} \tag{3-5}$$

The length, c, of the upstream ring (see Fig. 3-1) shall not be greater than $0.5D$. The thickness, f, of the slot shall be greater than or equal to twice the width, a, of the annular slot. The area of the cross-section of the annular chamber, gh, shall be greater than or equal to half the total area of the opening connecting this chamber to the inside of the pipe.

All surfaces of the ring that are in contact with the measured fluid shall be clean and shall have a well-machined finish. The pressure taps connecting the annular chambers to the secondary devices are pipe wall taps, circular at the point of breakthrough and with a diameter, j, between 4 mm and 10 mm (0.015 in. and 0.39 in.).

The upstream and downstream carrier rings need not necessarily be symmetrical in relation to each other, but they shall both conform to the preceding requirements. The diameter of the pipe shall be measured as specified in para. 3-5.4(b), the carrier ring being regarded as part of the primary device. This also applies to the distance requirement given in para. 3-5.4(d) so that s shall be measured from the upstream edge of the recess formed by the carrier ring.

(b) The downstream pressure taps can either be corner taps as described in para. 3-4.1.5(a), or as described in the remainder of this section. The distance between the center of the tap and the upstream face of the nozzle shall be

(1) $\leq 0.15D$ for $\beta \leq 0.67$

(2) $\leq 0.20D$ for $\beta > 0.67$

When installing the pressure taps, the thickness of the gaskets and/or sealing material must be taken into account.

The centerline of the tap shall meet the pipe centerline and be at an angle of 90 deg ± 3 deg to it. The hole on the inside wall of the pipe shall be circular. The edges shall be flush with the internal surface of the pipe wall and as sharp as possible. To ensure the elimination of all burrs or wire edges at the inner edge, rounding is permitted, but shall have a radius less than one-tenth of the pressure tap diameter. No irregularity shall appear inside the connecting hole, on the edges of the hole drilled in the pipe wall, or on the pipe wall close to the pressure tap. Conformity of the pressure taps with the requirements of this paragraph can be judged by visual inspection.

The diameter of pressure taps shall be less than $0.13D$ and less than 13 mm (0.5 in.). No restriction is placed on the minimum diameter, which is determined by the need to prevent blockage and to give satisfactory dynamic performance. The upstream and downstream taps shall have the same diameter.

The pressure taps shall be circular and cylindrical over a length of at least 2.5 times the internal diameter of the tap, measured from the inner wall of the pipeline. The centerlines of the pressure taps can be located in any axial plane of the pipeline. The axis of the upstream tap and that of the downstream tap can be located in different axial planes.

3-4.1.6 Coefficients of ISA 1932 Nozzles

3-4.1.6.1 Limits of Use. The ISA 1932 Nozzle shall be used in accordance with this Part when

(a) 50 mm (2 in.) $\leq D \leq$ 500 mm (20 in.)

(b) $0.30 \leq \beta \leq 0.80$

(c) 7 (10^4) $\leq R_D \leq$ 1 (10^7) for $0.30 \leq \beta < 0.44$

(d) 2 (10^4) $\leq R_D \leq$ 1 (10^7) for $0.44 \leq \beta \leq 0.80$

In addition, the relative roughness of the pipe shall conform to the values given in Table 3-1.

Most of the experiments on which the values of the discharge coefficient, C, given in this Part are based, were carried out in pipes with a relative roughness $R_a/D \leq 1.2\ (10^{-4})$. Pipes with higher relative roughness can be used if the roughness for a distance of at least $10D$ upstream of the nozzle is within the limits given in Table 3-1. Information as to how to determine R_a is given in Part 1 of this Standard.

3-4.1.6.2 Discharge Coefficient, *C*. The discharge coefficient, C, is given by the following equation:

$$C = 0.9900 - 0.2262\beta^{4.1} - (0.00175\beta^2 - 0.0033\beta^{4.15})\left(\frac{10^6}{R_D}\right)^{1.15} \tag{3-6}$$

Values of C as a function of β and R_D are given for convenience in Table 3A-1. These values are not intended for precise interpolation and extrapolation is not permitted.

Table 3-1 Upper Limits of Relative Roughness of the Upstream Pipe for ISA 1932 Nozzles

β	$10^4\ R_a/D$
≤0.35	8.0
0.36	5.9
0.38	4.3
0.40	3.4
0.42	2.8
0.44	2.4
0.46	2.1
0.48	1.9
0.50	1.8
0.60	1.4
0.70	1.3
0.77	1.2
0.80	1.2

GENERAL NOTE: Most of the data on which this table is based were collected at $R_D \leq 1\ (10^6)$. At higher R_D, more stringent limits on pipe roughness are likely required.

Copyright ASME International
Provided by IHS under license with ASME
No reproduction or networking permitted without license from IHS

Not for Resale

3-4.1.6.3 Expansibility Factor, $\varepsilon(Y)$. The expansibility factor, $\varepsilon(Y)$, is calculated by means of Eq. (3-7):

$$\varepsilon(\mathrm{Y}) = \left\{\left(\frac{\kappa\tau^{2/\kappa}}{\kappa-1}\right)\left(\frac{1-\beta^4}{1-\beta^4\tau^{2/\kappa}}\right)\left[\frac{1-\tau^{(\kappa-1)/\kappa}}{1-\tau}\right]\right\}^{0.5} \quad (3\text{-}7)$$

where

τ = pressure ratio (p_2/p_1)
κ = isentropic exponent

This equation is applicable only for values of D, β, and R_D as specified in para. 3-4.1.6.1. Test results for determination of $\varepsilon(Y)$ are known for air, steam, and natural gas. There is no known objection to using the same equation for other gases for which the isentropic exponent is known. The equation is applicable, however, only if the flow is not choked and $p_2/p_1 \geq 0.80$.

Values of the expansibility factor $\varepsilon(Y)$ for a range of isentropic exponents, pressure ratios, and diameter ratios are given for convenience in Table 3A-4 in Appendix 3A. This table is not intended for precise interpolation and extrapolation is not permitted.

3-4.1.7 Uncertainties

3-4.1.7.1 Uncertainty of Discharge Coefficient, C. When D, β, R_D, and R_a/D are assumed to be known without error, the relative uncertainty of the value of C is equal to

(a) $\pm$ 0.80% for $\beta \leq 0.60$
(b) $\pm$ $(2\beta - 0.4)$% for $\beta > 0.60$

3-4.1.7.2 Uncertainty of Expansibility Factor, $\varepsilon(Y)$. The relative uncertainty, %, of $\varepsilon(Y)$ is equal to

(SI Units)

$$\pm\ (4 + 100\beta^8)\ \frac{\Delta p}{p_1} \quad (3\text{-}8)$$

(U.S. Customary Units)

$$\left[\pm\ (4 + 100\beta^8)\ \frac{0.03606247 h_w}{p_1}\right]$$

This uncertainty assumes that β, $\Delta p\ (h_w)$, p_1, and κ (the isentropic exponent of the line fluid) are known without error.

3-4.1.8 Pressure Loss, $\Delta\varpi$. The pressure loss, $\Delta\varpi\ (h)$, for the ISA 1932 nozzle is approximately related to the differential pressure $\Delta p\ (h_w)$ by the Eq. (3-9)

(SI Units)

$$\Delta\varpi = \frac{\sqrt{1-\beta^4(1-C^2)} - C\beta^2}{\sqrt{1-\beta^4(1-C^2)} + C\beta^2}\ \Delta p \quad (3\text{-}9)$$

(U.S. Customary Units)

$$h = \frac{\sqrt{1-\beta^4(1-C^2)} - C\beta^2}{\sqrt{1-\beta^4(1-C^2)} + C\beta^2}\ (0.03606247 h_w)$$

This pressure loss is the difference in static pressure between the pressure measured at the wall on the upstream side of the primary device at a section where the influence of the approach impact pressure adjacent to the device is still negligible (approximately 1D upstream of the primary device) and that measured on the downstream side of the primary device where the static pressure recovery by expansion of the jet can be considered as just completed (approximately 6D downstream from the discharge of the primary device).

The pressure loss coefficient, K, for the ISA 1932 nozzle is

$$K = \left[\frac{\sqrt{1-\beta^4(1-C^2)}}{C\beta^2} - 1\right]^2 \quad (3\text{-}10)$$

where K is defined by the following equation:

(SI Units)

$$K = \frac{\Delta\varpi}{\frac{1}{2}\rho_1 V_1^2} \quad (3\text{-}11)$$

(U.S. Customary Units)

$$K = \frac{h}{\frac{1}{2}\rho_1 V_1^2}$$

3-4.2 Long Radius Nozzles

3-4.2.1 General. There are two types of long radius nozzle.

(a) High-Beta nozzles ($0.25 \leq \beta \leq 0.8$)
(b) Low-Beta nozzles ($0.20 \leq \beta \leq 0.5$)

For β values between 0.25 and 0.50, either design can be used. Figure 3-2 illustrates the geometric shapes of long radius nozzles, showing cross-sections passing through the throat centerlines. The reference letters used in the text refer to those shown on Fig. 3-2. Both types of nozzle consist of a convergent inlet, whose shape is a quarter ellipse, and a cylindrical throat.

That part of the nozzle that is inside the pipe shall be circular in cross-section, with the possible exception of the holes of the pressure taps.

3-4.2.2 Profile of High-Beta Nozzle

(a) The inner face can be characterized by a convergent section, A, a cylindrical throat, B, and a plain end, C.

(b) The convergent section, A has the shape of a quarter ellipse. The center of the ellipse is at a distance $D/2$ from the axial centerline. The major centerline of the ellipse is parallel to the axial centerline. The value of half the major axis is $D/2$. The value of half the minor axis is $(D - d)/2$.

The profile of the convergent section shall be checked by means of a template. Any two diameters of the convergent section measured in the same plane perpendicular to the centerline shall not differ from each other by more than 0.1% of their mean value.

(c) The throat, B has a diameter, d, and a length $0.6d$.

The value d of the diameter of the throat shall be taken as the mean of the measurements of at least four diame-

Copyright ASME International
Provided by IHS under license with ASME
No reproduction or networking permitted without license from IHS Not for Resale

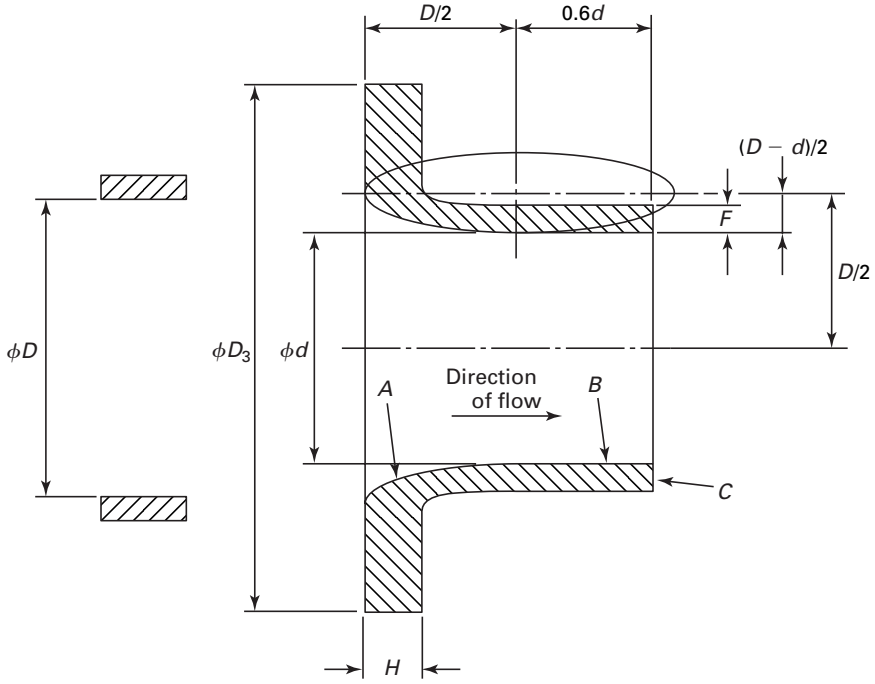

(a) High Ratio 0.25 ≤ β ≤ 0.8

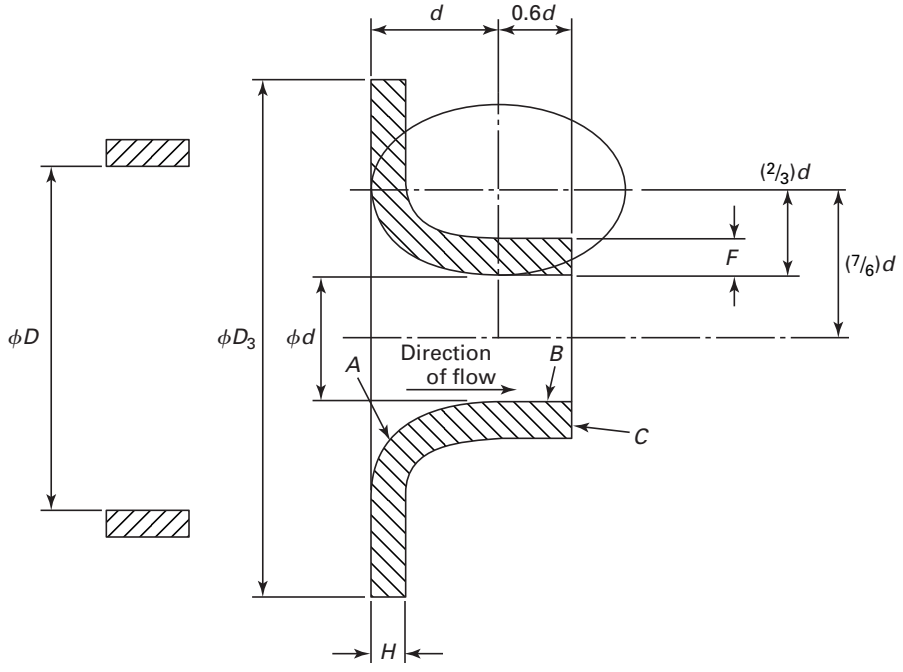

(b) Low Ratio 0.2 ≤ β ≤ 0.5

Fig. 3-2 Long Radius Nozzles

Copyright ASME International
Provided by IHS under license with ASME
No reproduction or networking permitted without license from IHS
Not for Resale

ters distributed in axial planes and at approximately equal angles to each other. The throat shall be cylindrical. Any diameter of any cross-section shall not differ by more than 0.05% from the value of the mean diameter. Measurement at a sufficient number of cross sections shall be made to determine that the throat does not diverge in the direction of flow. Within the stated uncertainty limits, however, the throat can be slightly convergent.

(d) The distance between the pipe wall and the outside face of the throat shall be no less than 3 mm (0.12 in.).

(e) The thickness, H shall be greater than or equal to 3 mm (0.12 in.) and less than or equal to $0.15D$. The thickness of the throat, F shall be greater than or equal to between 3 mm unless $D \leq 65$ mm (2.5 in.), in which case, F shall be no less than 2 mm (0.08 in.). The thickness shall be sufficient to prevent distortion due to fabrication and/or machining.

(f) The surface of the inner face shall have a roughness criterion $R_a \leq 10^{-4}\ d$.

(g) The shape of the downstream (outside) face is not specified but shall comply with paras. 3-4.2.2(d) and (e), and the last sentence of para. 3-4.2.1.

3-4.2.3 Profile of Low-Beta Nozzle

(a) The requirements given in para. 3-4.2.2 for the high-beta nozzle apply also to the low-beta nozzle with the exception of the shape of the ellipse, which is given in para. 3-4.2.3(b).

(b) The convergent inlet, A has the shape of a quarter ellipse. The center of the ellipse shall be $7d/6$ (i.e., $d/2 + 2d/3$) from the axial centerline. The major axis of the ellipse is parallel to the axial centerline. The value of half the major axis is d. The value of half the minor axis is $2d/3$.

3-4.2.4 Material and Manufacture. The long radius nozzle can be manufactured from any material and in any way, provided that it remains in accordance with the foregoing description during flow measurement.

3-4.2.5 Pressure Taps

(a) The centerline of the upstream tap shall be at $1D$ $(+0.2D, -0.1D)$ from the inlet face of the nozzle. The centerline of the downstream tap shall be at $0.50D \pm 0.01D$ from the inlet face of the nozzle, except in the case of a low ratio nozzle with $\beta < 0.3188$. For a low ratio nozzle with $\beta < 0.3188$, the centerline of the downstream tap shall be at $1.6d$ $(+0, -0.02D)$ from the inlet face of the nozzle. Under no circumstances shall the downstream tap be located further downstream than the nozzle outlet. When installing the pressure taps, the thickness of the gaskets and/or sealing material shall be accounted for.

(b) The centerline of the tap shall meet the pipe centerline and be at an angle of 90 deg ± 3 deg. The hole on the inside wall of the pipe shall be circular. The edges shall be flush with the internal surface of the pipe wall and as sharp as possible. To ensure the elimination of all burrs or wire edges at the inner edge, rounding is permitted, but shall have a radius less than one-tenth of the pressure tap diameter. No irregularity shall appear inside the connecting hole, on the edges of the hole drilled in the pipe wall, or on the pipe wall close to the pressure tap.

The diameter of pressure taps shall be less than $0.13D$ and less than 13 mm (0.5 in.). No restriction is placed on the minimum diameter, which is determined in practice by the need to prevent blockage and to give satisfactory dynamic performance. The upstream and downstream taps shall have the same diameter.

The pressure taps shall be circular and cylindrical over a length of at least 2.5 times the internal diameter of the tap, measured from the inner wall of the pipeline. The centerlines of the pressure taps can be located in any axial plane of the pipeline. The axes of the upstream and downstream taps can be located in different axial planes, but are typically located in the same axial plane.

3-4.2.6 Coefficients of Long Radius Nozzles

3-4.2.6.1 Limits of Use. The long radius nozzles shall only be used in accordance with this Part 3 when

(a) 50 mm (2 in.) $\leq D \leq$ 630 mm (25 in.)

(b) 1 $(10^4) \leq R_D \leq 1\ (10^7)$

(c) $R_a/D \leq 3.2\ (10^{-4})$ in the upstream pipe

Pipes with higher relative roughness can be used if the roughness for a distance of at least $10D$ upstream of the nozzle is within the limit given above. Information as to how to determine R_a is given in Part 1 of this Standard. Most of the data on which this roughness limit is based were collected at $R_D \leq 1\ (10^6)$. At higher R_D, more stringent limits on pipe roughness are likely required.

3-4.2.6.2 Discharge Coefficient, *C*. The discharge coefficient is the same for both types of long radius nozzle when the taps are in accordance with para. 3-4.2.5.

The discharge coefficient, C, is given by the following equation, when referring to the upstream pipe Reynolds number R_D:

$$C = 0.9965 - 0.00653\beta^{0.5}\left(\frac{10^6}{R_D}\right)^{0.5} \tag{3-12}$$

When referring to the Reynolds number at the throat R_d, this equation becomes

$$C = 0.9965 - 0.00653\left(\frac{10^6}{R_d}\right)^{0.5} \tag{3-13}$$

and in this case, C is independent of the diameter ratio, β. Values of C as a function of β and R_D are given for convenience in Table 3A-2. These values are not intended for precise interpolation and extrapolation is not permitted.

3-4.2.6.3 Expansibility Factor, *ε* (*Y*). The indications given in para. 3-4.1.6.3 apply also to the expansibility factor for long radius nozzles, but within the limits of use specified in para. 3-4.2.6.1.

3-4.2.7 Uncertainties

3-4.2.7.1 Uncertainty of Discharge Coefficient, *C*. When β and R_d are assumed to be known without error, the relative uncertainty of the value of C is 2.0% for all values of β between 0.2 and 0.8.

Copyright ASME International
Provided by IHS under license with ASME
No reproduction or networking permitted without license from IHS Not for Resale

3-4.2.7.2 Uncertainty of Expansibility Factor, $\varepsilon(Y)$. The relative uncertainty, in percent, of $\varepsilon(Y)$ is equal to

(SI Units)

$$\pm (4 + 100\beta^8) \frac{\Delta p}{p_1} \tag{3-14}$$

(U.S. Customary Units)

$$\left[\pm (4 + 100\beta^8) \frac{0.03606247 h_w}{p_1}\right]$$

This uncertainty assumes that β, Δp (h_w), p_1, and κ (the isentropic exponent of the line fluid) are known without error.

3-4.2.8 Pressure Loss, $\Delta\varpi(h)$. Paragraph 3-4.1.8 applies equally to the pressure loss of long radius nozzles.

3-4.3 Venturi Nozzles

3-4.3.1 General Shape

(a) The profile of the venturi nozzle (see Fig. 3-3) is axisymmetric. It consists of a convergent section, with a rounded profile, a cylindrical throat, and a divergent section.

(b) The upstream face is identical with that of an ISA 1932 nozzle (see Fig. 3-1).

(c) The flat inlet part, A is limited by a circumference centered on the axis of revolution, with a diameter of $1.5d$, and by the inside circumference of the pipe, of diameter D. When $d = 0.6667D$, the radial width of this flat portion is zero.

When d is greater than $0.6667D$, the upstream face of the nozzle does not include a flat inlet part within the pipe. In

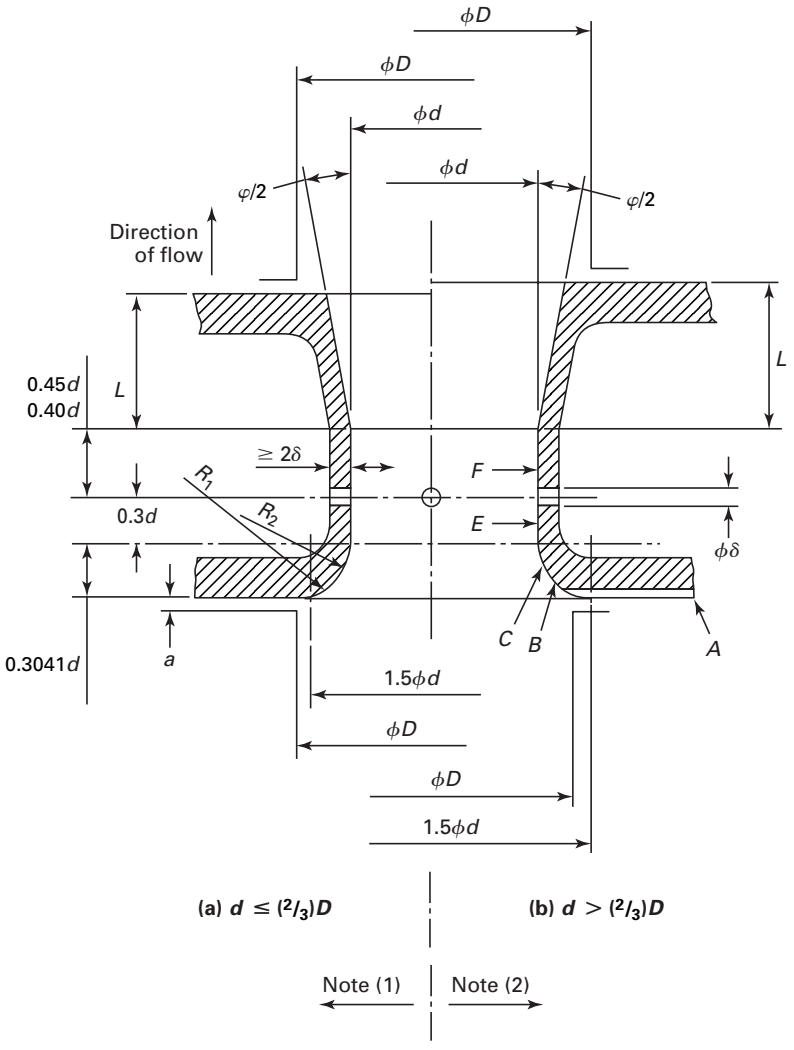

NOTES:
(1) Truncated divergent section.
(2) Nontruncated divergent section.

Fig. 3-3 Venturi Nozzle

Copyright ASME International
Provided by IHS under license with ASME
No reproduction or networking permitted without license from IHS
Not for Resale

this case, the nozzle is manufactured as if D is greater than $1.5d$ and the inlet flat part is then faced off so that the largest diameter of the convergent profile is just equal to D.

(d) The arc of circumference, B is tangential to the flat inlet part, A when $d < 0.6667D$, while its radius,

(1) $R_1 = 0.2d \pm 0.02d$ for $\beta < 0.5$

(2) $R_1 = 0.2d \pm 0.006d$ for $\beta \geq 0.5$

Its center of the arc of circumference, B is located $0.2d$ from the inlet plane and $0.75d$ from the axial centerline.

(e) The arc of circumference, C is tangential to the arc of circumference, B and to the throat, E. Its radius,

(1) $R_2 = d/3 \pm 0.033d$ for $\beta < 0.5$

(2) $R_2 = d/3 \pm 0.01d$ for $\beta \geq 0.5$

Its center is located $5d/6$ (i.e., $d/2 + d/3$) from the axial centerline and at

$$a_n = \frac{12 + \sqrt{39}}{60}\, d = 0.3041d \qquad (3\text{-}15)$$

from the flat inlet portion, A.

(f) The throat (see Fig. 3-3) consists of that portion upstream of the tap, E of length $0.3d$ and the portion downstream of the tap, F of a length $0.40d$ to $0.45d$. The value of the diameter of the throat shall be taken as the mean of the measurements of at least four diameters distributed in axial planes and at approximately equal angles to each other. The throat shall be cylindrical. No diameter of any cross section shall differ by more than 0.05% from the value of the mean diameter.

(g) The divergent section (see Fig. 3-3) shall be connected with the portion downstream, F of the tap of the throat without a rounded part, but any burrs shall be removed. The length, L of the divergent section has practically no influence on the discharge coefficient. The included angle of the divergent section, and hence the length, does influence the pressure loss. The included angle of the divergent section, ϕ shall be less than or equal to 30 deg.

(h) A venturi nozzle is called *truncated* when the outlet diameter of the divergent section is less than the diameter D and *not truncated* or *full* when the outlet diameter is equal to diameter D. The divergent portion may be truncated up to 35% of its length. Such truncation will increase the pressure loss of the device.

(i) The internal surfaces of the venturi nozzle shall have a roughness criterion $R_a \leq 10^{-4}d$.

3-4.3.2 Material and Manufacture

(a) The venturi nozzle can be manufactured from any material provided that it is in accordance with the description in para. 3-4.3.1 and will remain so during use. In particular, the venturi nozzle shall be clean when the flow measurements are made.

(b) The venturi nozzle is usually made of metal and shall be erosion and corrosion proof against the fluid with which it is to be used.

3-4.3.3 Pressure Taps

3-4.3.3.1 Angular Position of the Pressure Taps. The centerlines of the pressure taps can be located in any axial sector of the pipe. Consideration should be given to tap position, however, if contaminants, liquid droplets, or gas bubbles are likely to be present. In these cases, the invert and crown of the pipe should be avoided.

3-4.3.3.2 Upstream Pressure Taps. The upstream pressure taps shall be corner taps [see para. 3-4.1.5(a)]. The taps can be located either in the pipe or its flanges or in carrier rings as shown in Fig. 3-4.

3-4.3.3.3 Throat Pressure Taps. The throat pressure taps shall comprise at least four single pressure taps leading into an annular chamber, or piezometer ring or, if there are four taps, a "Triple-T" arrangement (see para. 1-4.4.3). Annular slots or interrupted slots shall not be used. The centerlines of the pressure taps shall meet the centerline of the venturi nozzle and shall be at equal angles to each other. The centerlines of the throat pressure taps shall lie in the plane perpendicular to the centerline of the venturi nozzle.

The diameter, δ_2, of the individual taps in the throat of venturi nozzles shall be less than or equal to 0.04d but shall be between 2 mm and 10 mm (0.08 in. and 0.39 in.). The pressure taps shall be circular and cylindrical over a length of at least 2.5 times the internal diameter of the taps, measured from the inner wall of the venturi nozzle.

The hole on the inside wall of the pipe shall be circular. The edges shall be flush with the internal surface of the pipe wall and as sharp as possible. To ensure the elimination of all burrs or wire edges at the inner edge, rounding is permitted, but shall have a radius less than one-tenth of the pressure tap diameter. No irregularity shall appear inside the connecting hole, on the edges of the hole drilled in the pipe wall, or on the pipe wall close to the pressure tap. Conformity of the pressure taps with the requirements specified can be judged by visual inspection.

3-4.3.4 Coefficients

3-4.3.4.1 Limits of Use. Venturi nozzles shall only be used in accordance with Part 3 when

(a) 65 mm (2.5 in.) $\leq D \leq$ 500 mm (20 in.)

(b) $d \geq$ 50 mm (2 in.)

(c) $0.316 \leq \beta \leq 0.775$

(d) $1.5\ (10^5) \leq R_D \leq 2\ (10^6)$

The roughness of the pipe shall conform to the values given in Table 3-2. Most of the experiments on which the values of the discharge coefficient are based were carried out on pipes with a relative roughness $R_a/D < 1.2\ (10^{-4})$. Pipes with higher relative roughness can be used if the roughness over a distance of at least $10D$ upstream of the venturi nozzle is within the limits of Table 3-2. Information as to how to determine R_a is given in Part 1 of this Standard.

3-4.3.4.2 Discharge Coefficient, *C*. The discharge coefficient, C, is given by the following equation:

$$C = 0.9858 - 0.196\beta^{4.5} \qquad (3\text{-}16)$$

Within the limits specified in 3-4.3.4.1, C is independent of the Reynolds number and of the pipe di-

Copyright ASME International
Provided by IHS under license with ASME
No reproduction or networking permitted without license from IHS Not for Resale

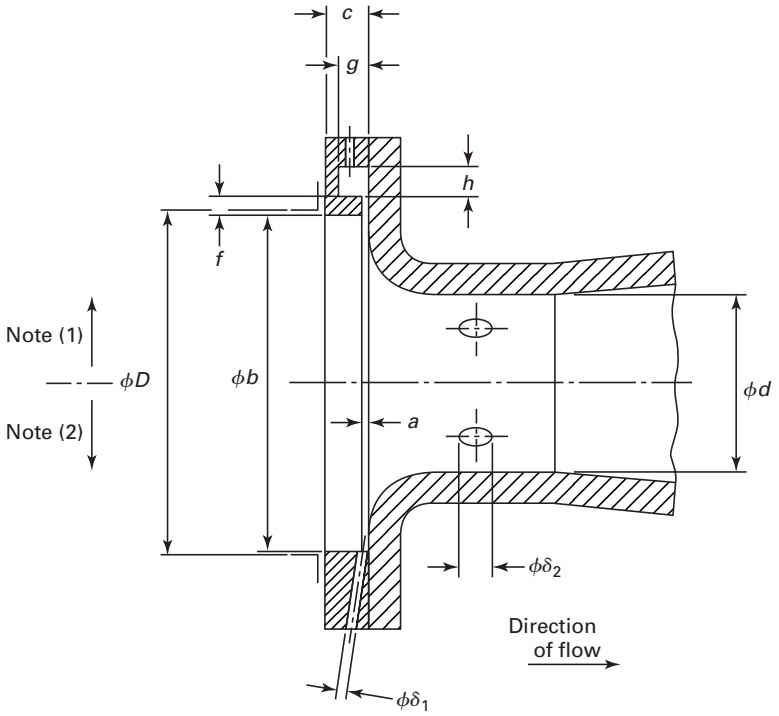

NOTES:
(1) With annular slot.
(2) With discrete corner taps.

Fig. 3-4 Venturi Nozzle, Pressure Taps

ameter D. Values of C as a function of β are given for convenience in Table 3A-3. This table is not intended for precise interpolation and extrapolation is not permitted.

3-4.3.4.3 Expansibility Factor, $\varepsilon(Y)$. The indications given in para. 3-4.1.6.3 apply also to the expansibility factor for venturi nozzles, but within the limits of use specified in para. 3-4.3.4.1.

Table 3-2 Upper Limits of Relative Roughness of the Upstream Pipe for Venturi Nozzles

β	$10^4\ R_a/D$
≤0.35	8.0
0.36	5.9
0.38	4.3
0.40	3.4
0.42	2.8
0.44	2.4
0.46	2.1
0.48	1.9
0.50	1.8
0.60	1.4
0.70	1.3
0.775	1.2

3-4.3.5 Uncertainties

3-4.3.5.1 Uncertainty of Discharge Coefficient. Within the limits of use specified in 3-4.3.4.1 and when β is assumed to be known without error, the relative uncertainty of the values of the discharge coefficient C, %, is equal to $(1.2 + 1.5\beta^4)$.

3-4.3.5.2 Uncertainty of Expansibility Factor, $\varepsilon(Y)$. The relative uncertainty, in percent, of $\varepsilon(Y)$ is equal to

(SI Units)

$$\pm (4 + 100\beta^8)\ \frac{\Delta p}{p_1} \qquad (3\text{-}17)$$

(U.S. Customary Units)

$$\left[\pm (4 + 100\beta^8)\ \frac{0.03606247 h_w}{p_1}\right]$$

This uncertainty assumes that β, Δp (h_w), p_1, and k (the isentropic exponent of the line fluid) are known without error.

3-4.3.6 Pressure Loss. The indications given in this paragraph apply to venturi nozzles when the included angle of the divergent is not greater than 15 deg.

3-4.3.6.1 Definition of the Pressure Loss. The pressure loss caused by a venturi nozzle can be determined

Copyright ASME International
Provided by IHS under license with ASME
No reproduction or networking permitted without license from IHS
Not for Resale

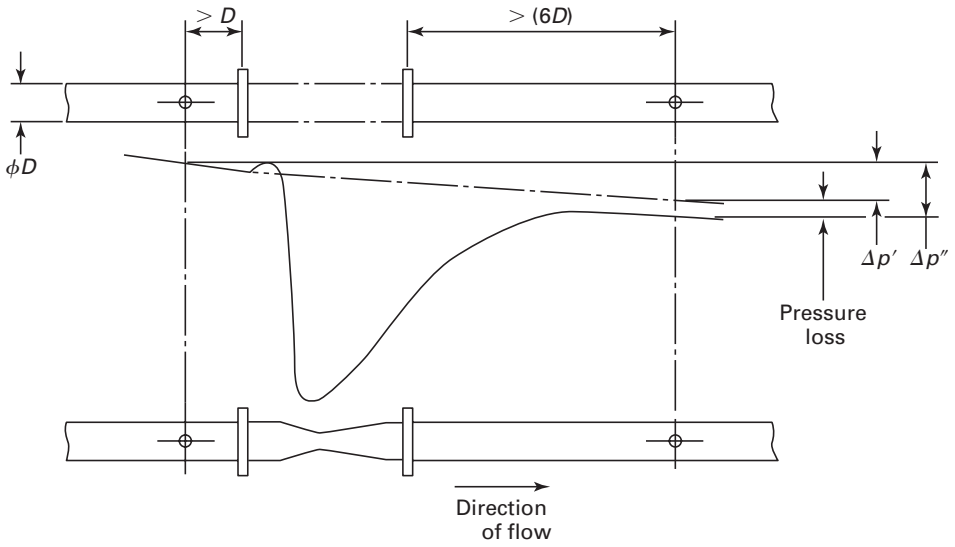

Fig. 3-5 Pressure Loss Across a Venturi Nozzle

by pressure measurements made prior and subsequent to the installation of the venturi nozzle in a pipe through which there is a given flow.

In Fig. 3-5, $\Delta p'$ is the pressure difference measured between a point at least 1D upstream from the upstream end of the venturi nozzle and a point 6D downstream from the downstream end of the venturi nozzle, prior to installation of the venturi nozzle. $\Delta p''$ is the difference in pressure measured between the same pressure taps after installation of the venturi nozzle. The pressure loss caused by the venturi nozzle is given by $\Delta p'' - \Delta p'$.

3-4.3.6.2 Relative Pressure Loss. The relative pressure loss, ξ, is the ratio value of the pressure loss $\Delta p'' - \Delta p'$ related to the differential pressure Δp (h_w):

(SI Units)

$$\xi = \frac{\Delta p'' - \Delta p'}{\Delta p} \tag{3-18}$$

(U.S. Customary Units)

$$\xi = \frac{\Delta p'' - \Delta p'}{h_w}$$

The relative pressure loss depends on:

(a) the diameter ratio (ξ decreases when β increases)

(b) the Reynolds number (ξ decreases when R_D increases)

(c) the gross and fine geometry of the venturi nozzle, e.g., angle of the divergent

(d) manufacturing of the convergent, surface finish of the different parts, etc. (ξ increases when ϕ and R_a/D increase)

(e) the installation conditions (good alignment, roughness of the upstream conduit, etc).

When the divergent angle is not greater than 15 deg, the relative value of the pressure loss can be accepted as being generally between 5% and 20%.

3-5 INSTALLATION REQUIREMENTS

3-5.1 General

General installation requirements for pressure differential devices are contained in para. 1-6 of this Standard and shall be followed in conjunction with the additional installation requirements for nozzles and venturi nozzles given in this section. The general requirements for flow conditions at the primary device are given in para. 1-6.3 of this Standard. The requirements for use of a flow conditioner are given in para. 1-6.4 of this Standard. For some commonly used fittings shown in Table 3-3, the minimum straight lengths of pipe indicated shall be used. Detailed requirements are given in para. 3-5.2.

3-5.2 Minimum Upstream and Downstream Straight Pipe Requirements

(a) The minimum straight lengths of pipe to be installed upstream and downstream of the primary device for various fittings in the installation without flow conditioners or straighteners are given in Table 3-3.

(b) When a flow conditioner is not used, the lengths specified in Table 3-3 must be regarded as the minimum values. For research and calibration work, it is recommended that the upstream values specified in Table 3-3 be increased as much as reasonably possible.

(c) When the straight lengths used are equal to or longer than the values specified in each Column A of Table 3-3 for "Zero Additional Uncertainty," it is not necessary to increase the uncertainty in discharge coefficient to take account of the effect of the particular installation. Although termed "uncertainty" in this instance, using upstream lengths shorter than those given in each Column A of Table 3-3 will result in flow measurement bias errors. Furthermore, orientation of the

Copyright ASME International
Provided by IHS under license with ASME
No reproduction or networking permitted without license from IHS
Not for Resale

Copyright ASME International
Provided by IHS under license with ASME
No reproduction or networking permitted without license from IHS

Table 3-3 Required Straight Lengths for Nozzles and Venturi Nozzles

	Upstream (Inlet) Side of the Primary Device																				Downstream (Outlet) Side of Primary Device	
Diameter Ratio, β [Note (1)]	Single 90 deg Bend or Tee (flow from one branch only)		Two or More 90 deg Bends in Same Plane		Two or More 90 deg Bends in Different Planes		Reducer $2D$ to D Over Length of $1.5D$ to $3D$		Expander $0.5D$ to D Over Length of D to $2D$		Globe Valve Fully Open		Full Bore Ball or Gate Valve Fully Open		Abrupt Symmetrical Reduction		Thermometer Pocket or Well of Diameter $\leq 0.03D$ [Note (2)]		Thermometer Pocket or Well of Diameter Between $0.03D$ and $0.13D$ [Note (2)]		Fittings (Columns 2 to 8)	
1	2		3		4		5		6		7		8		9		10		11		12	
	A	B	A	B	A	B	A	B	A	B	A	B	A	B	A	B	A	B	A	B	A	B
0.20	10	6	14	7	34	17	5	Note (3)	16	8	18	9	12	6	30	15	5	3	20	10	4	2
0.25	10	6	14	7	34	17	5	Note (3)	16	8	18	9	12	6	30	15	5	3	20	10	4	2
0.30	10	6	16	8	34	17	5	Note (3)	16	8	18	9	12	6	30	15	5	3	20	10	5	2.5
0.35	12	6	16	8	36	18	5	Note (3)	16	8	18	9	12	6	30	15	5	3	20	10	5	2.5
0.40	14	7	18	9	36	18	5	Note (3)	16	8	20	10	12	6	30	15	5	3	20	10	6	3
0.45	14	7	18	9	38	19	5	Note (3)	17	9	20	10	12	6	30	15	5	3	20	10	6	3
0.50	14	7	20	10	40	20	6	5	18	9	22	11	12	6	30	15	5	3	20	10	6	3
0.55	16	8	22	11	44	22	8	5	20	10	24	12	14	7	30	15	5	3	20	10	6	3
0.60	18	9	26	13	48	24	9	5	22	11	26	13	14	7	30	15	5	3	20	10	7	3.5
0.65	22	11	32	16	54	27	11	6	25	13	28	14	16	8	30	15	5	3	20	10	7	3.5
0.70	28	14	36	18	62	31	14	7	30	15	32	16	20	10	30	15	5	3	20	10	7	3.5
0.75	36	18	42	21	70	35	22	11	38	19	36	18	24	12	30	15	5	3	20	10	8	4
0.80	46	23	50	25	80	40	30	15	54	27	44	22	30	15	30	15	5	3	20	10	8	4

GENERAL NOTES:

(a) Values expressed as multiples of internal diameter, D.

(b) The minimum straight lengths required are the lengths between various fittings located upstream or downstream of the primary device and the primary device itself. All straight lengths shall be measured from the upstream face of the primary device.

(c) These lengths are not based on modern data.

(d) Column A for each fitting gives lengths corresponding to “zero additional uncertainty” values [see para. 3-5.2(c)].

(e) Column B for each fitting gives lengths corresponding to “0.5% additional uncertainty” values [see para. 3-5.2(d)].

NOTES:

(1) For some types of primary device not all values of β are permissible.

(2) The installation of thermometer pockets or wells will not alter the required minimum upstream straight lengths for the other fittings.

(3) The straight length in each Column A gives zero additional uncertainty; data are not available for shorter straight lengths which could be used to give the required straight lengths for each Column B.

Not for Resale

--`,,```,,,,````-`-`,,`,,`,`,,`---

pressure taps with respect to the various fittings can affect the magnitude of the bias error.

(d) For a given fitting, when the upstream straight length is greater than or equal to the "0.5% Additional Uncertainty" value shown in each Column B of Table 3-3 and shorter than the value corresponding to "Zero Additional Uncertainty" (as shown in each Column A), an additional uncertainty of 0.5% shall be added arithmetically to the uncertainty in the discharge coefficient. As detailed in para. 3-5.2.3, although termed "uncertainty" in this instance, when using upstream straight length greater than or equal to the value shown in each Column B of Table 3-3 and shorter than the value corresponding to each Column A of Table 3-3, a flow measurement bias error less than 0.5% will be introduced. Since both the direction (positive or negative) and the magnitude of this error are specific to the installation in question, this Standard addresses this unknown bias error as an increase in the uncertainty band.

(e) Part 3 of this Standard cannot be used to predict the value of any additional uncertainty when the upstream straight length is shorter than the "0.5% Additional Uncertainty" values specified in each Column B of Table 3-3, nor when both the upstream and downstream straight lengths are shorter than the "Zero Additional Uncertainty" values specified in each Column A of Table 3-3 are used.

(f) The valves included in Table 3-3 shall be fully open during the flow measurement process. It is recommended that control of the flow rate be achieved by valves located downstream of the primary element. Isolating valves located upstream of the primary element shall be fully open, and these valves must be full bore. The valve should be fitted with stops for alignment of the ball or gate in the open position.

(g) Upstream valves that are bored to match the inside diameter of the adjacent pipe and are designed in such a manner that in the fully opened condition there are no steps, can be regarded as part of the upstream pipe length, and do not need to have added lengths as in Table 3-3. Other valves should not be included upstream of the primary element. It is recommended that control of the flow rate be achieved by valves located downstream of the primary element.

(h) The values given in Table 3-3 were determined experimentally with fully developed and swirl-free flow upstream of the subject fitting. Since such conditions are difficult to achieve, the following information can be used as a guide for normal installation practice:

(1) If the nozzle or venturi nozzle is installed in a pipe leading from an upstream open space or large vessel, either directly or through any other fittings covered by Table 3-3, the total length of pipe between the open space and the primary device shall never be less than 30*D*. If a fitting covered by Table 3-3 is installed then the straight lengths specified in the table shall also apply between this fitting and the primary device.

NOTE: A metering system header is not an open space or large vessel in this instance. A large vessel must have a cross-section area of at least ten times that of the metering tube. In the case of a normal header (cross-sectional area is typically 1.5 times the cross-sectional area of the operating flow meter tubes), it is strongly recommended that a flow conditioner be installed downstream of the header (see para. 1-6.4 of this Standard) since there will always be distortion of the flow profile and a high probability of swirl.

(2) If several fittings of the type covered by Table 3-3 (other than the combinations of 90 deg bends already covered by this Table) are placed in series upstream of the primary device, the following paragraphs shall apply:

(a) Between the fitting immediately upstream of the primary device (Fitting 1) and the primary device itself, there shall be a straight length at least equal to the minimum length given in Table 3-3 appropriate for the specific nozzle or venturi nozzle diameter ratio in conjunction with Fitting 1.

(b) Between Fitting 1 and the next fitting further from the nozzle or venturi nozzle (Fitting 2): Irrespective of the actual β of the primary device used, a minimum straight length equal to half the number of diameters given in Table 3-3 for a 0.7 diameter ratio primary device used in conjunction with Fitting 2 must be included between Fittings 1 and 2.

If either of the minimum straight lengths is selected from each Column B of Table 3-3, a 0.5% additional uncertainty shall be added arithmetically to the discharge coefficient uncertainty. If the length between two or more consecutive 90 deg bends is more than 15*D*, these shall be treated as a single fitting in accordance with Table 3-3, Column 1.

(c) If the upstream metering section has a full bore valve preceded by another fitting, then the valve can be installed at the outlet of the second fitting from the primary device. The length between the valve and the second fitting shall be added to the length between the primary device and the first fitting, specified in Table 3-3 (see also Fig. 3-6). Note that para. 3-5.2(h)(3) must also be satisfied.

(3) In addition to the rule in para. 3-5.2(h)(2), any fitting (treating any two consecutive 90 deg bends as a single fitting) must be located at a distance from the primary device at least as great as that given in Table 3-3. This is regardless of the number of fittings between the fitting in question and the primary device.

The distance between the nozzle or venturi nozzle and the fitting shall be measured along the pipe axis. If the distance meets this requirement using the number of diameters in each Column B but not that in each Column A, then a 0.5% additional uncertainty shall be added arithmetically to the discharge coefficient uncertainty. This additional uncertainty shall not be added more than once under the provisions of paras. 3-5.2(h)(2) and 3-5.2(h)(3).

(i) Two cases of the application of paras. 3-5.2(h)(2) and 3-5.2(h)(3) are considered. In each case, the second

Copyright ASME International
Provided by IHS under license with ASME
No reproduction or networking permitted without license from IHS Not for Resale

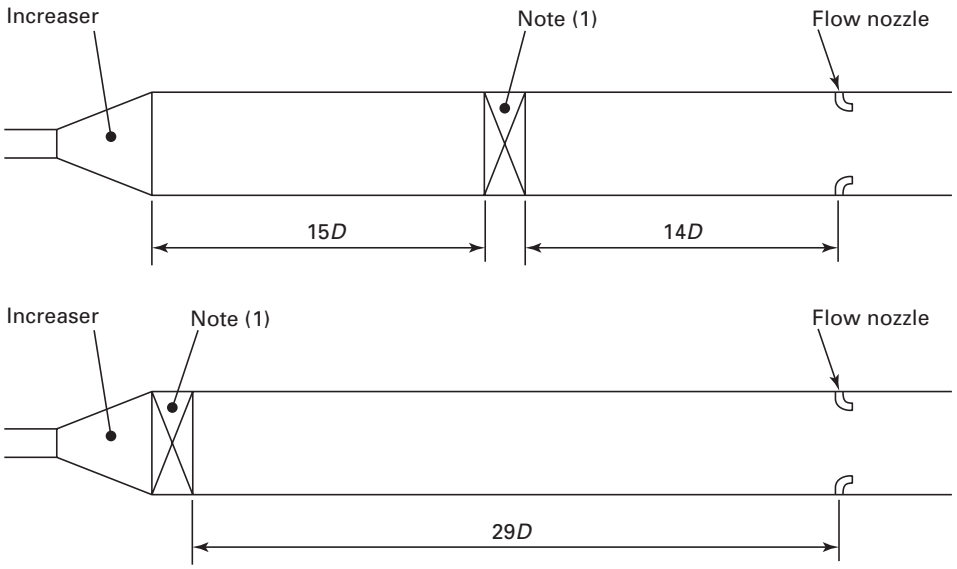

NOTE:
(1) Full bore ball or gate valve, fully open.

Fig. 3-6 Layout Including a Full Bore Valve for $\beta = 0.6$

fitting from the nozzle or venturi nozzle is a two-bend combination in perpendicular planes and the nozzle or venturi nozzle has diameter ratio 0.65.

If the first fitting is a full bore ball valve fully open (see Fig. 3-7, sketch (a)), the distance between the valve and the primary device must be at least 16*D* (from Table 3-3). Furthermore, between the two-bend combination in perpendicular planes and the valve, there must be at least 31*D* [from para. 3-5.2(h)(2)], and the distance between the two-bend combination in perpendicular planes and the primary device, there must be at least 54*D* [from 3-5.2(h)(3)]. If the valve has length 1*D*, an additional length of 6*D* is required. This length can be upstream, downstream, or partly upstream and partly downstream of the valve. Paragraph 3-5.2(h)(2)(c) could also be used to move the valve to be adjacent to the two-bend combination in perpendicular planes provided that there is at least 54*D* from the two-bend combination in perpendicular planes to the primary device [see Fig. 3-7, sketch (b)].

If the first fitting is a reducer from 2*D* to *D* over a length of 2*D* [see Fig. 3-7, sketch (c)] the distance between the reducer and the nozzle must be at least 11*D* (from Table 3-3) and that between the two-bend combination in perpendicular planes and the reducer must be at least 31 × 2*D* [from para. 3-5.2(h)(2)]; the distance between the two-bend combination in perpendicular planes and the nozzle must be at least 54*D* [from para. 3-5.2(h)(3)]. No additional length is required because of para. 3-5.2(h)(3).

If the first fitting is an expander from 0.5*D* to *D* over a length of 2*D* [see Fig. 3-7, sketch (d)], the distance between the expander and the nozzle or venturi nozzle must be at least 25*D* (from Table 3-3). Furthermore, between the two-bend combination in perpendicular planes and the expander, there must be at least 31 × 0.5*D* [from para. 3-5.2(h)(2)], and the distance between the two-bend combination in perpendicular planes and the primary device must be at least 54*D* [from para. 3-5.2(h)(3)]. An additional length of 11.5*D* is required. This length can be upstream, downstream, or partly upstream and partly downstream of the expander.

3-5.3 Flow Conditioners

A flow conditioner can be used to reduce upstream straight lengths. See paras. 1-6.4.1 and 1-6.4.2 for additional information. All test work shall be carried out using the same type of nozzle as is being used for the measurement of flow.

3-5.4 Circularity of Pipe Cross-Section

(a) The length of the upstream pipe section adjacent to the primary device (or to the carrier ring if there is one) shall be at least 2*D* and cylindrical. The pipe is said to be cylindrical when no diameter in any plane differs by more than 0.3% from the mean value of *D* obtained from the measurements specified in para. 3-5.4(b).

(b) The value for the pipe diameter *D* shall be the mean of the internal diameters over a length of 0.5*D* upstream of the upstream pressure tap. The mean internal diameter shall be the arithmetic mean of measurements of at least twelve diameters: four diameters (positioned at approximately equal angles to each

Copyright ASME International
Provided by IHS under license with ASME
No reproduction or networking permitted without license from IHS
Not for Resale

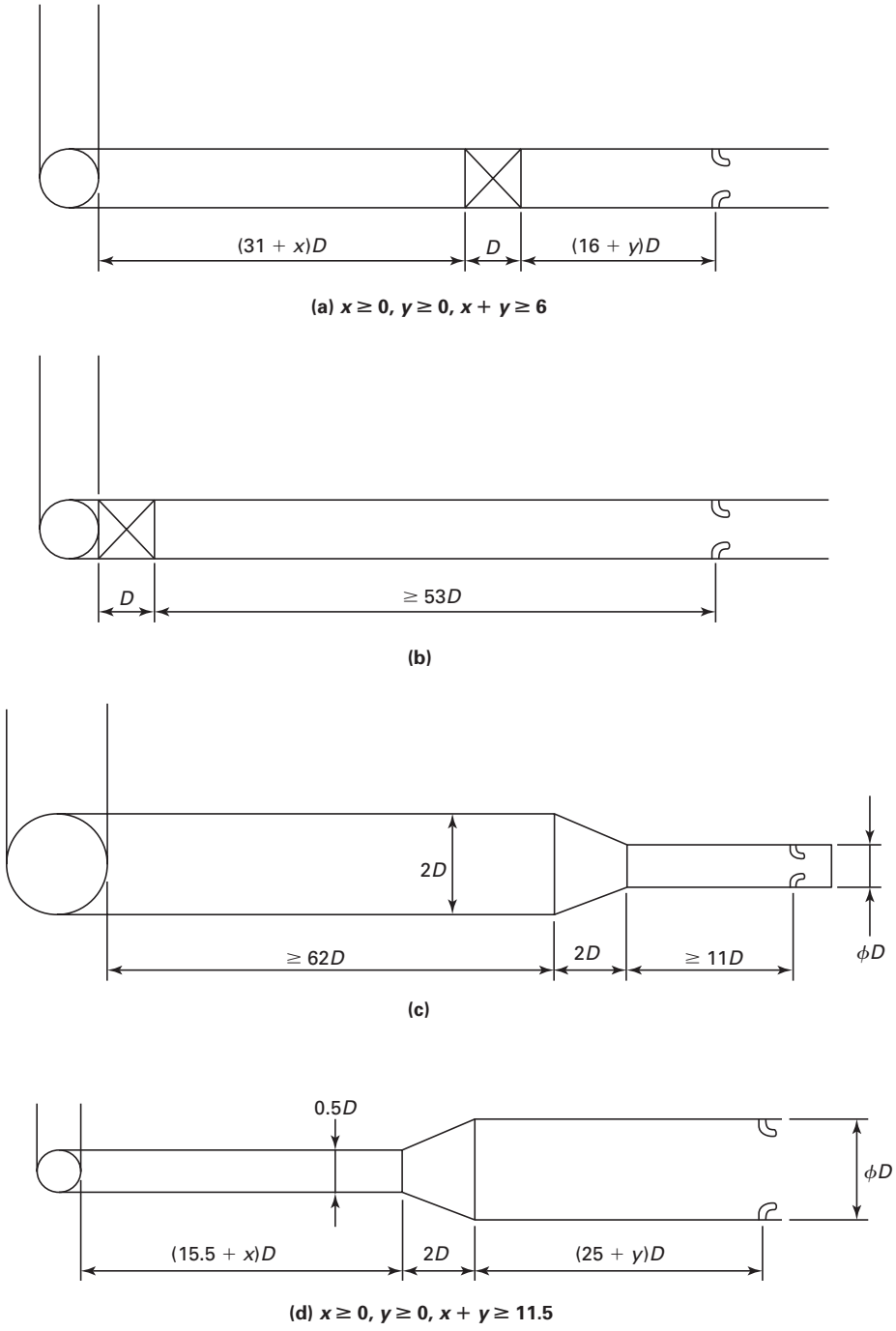

GENERAL NOTE: See para. 3-5.2(i).

Fig. 3-7 Examples of Acceptable Installations

other) and distributed in each of at least three cross sectional planes. These planes shall be evenly distributed over a length of 0.5*D*. Two of these planes shall be 0 and 0.5*D* from the upstream tap, and one shall be in the plane of the weld (in the case of a weld-neck construction). If there is a carrier ring (see Fig. 3-4), this value of 0.5*D* shall be measured from the upstream edge of the carrier ring.

(c) Beyond 2*D* from the primary device, the upstream pipe run between the primary device and the first upstream fitting or disturbance can be made up of one or more sections of pipe.

Copyright ASME International
Provided by IHS under license with ASME
No reproduction or networking permitted without license from IHS
Not for Resale

Between 2D and 10D from the nozzle, no additional uncertainty in the discharge coefficient is incurred if the diameter step (the difference between the diameters) between any two sections does not exceed 0.3% of the mean value of D obtained from the measurements specified in para. 3-5.4(b). Moreover, the actual step caused by misalignment and/or change in diameter must not exceed 0.3% of D at any point on the internal circumference of the pipe. Mating flanges, therefore, require the bores to be matched and the flanges aligned on installation. Dowels or self-centering gaskets can be used.

Beyond 10D from the nozzle, no additional uncertainty in the discharge coefficient is involved provided that the diameter step (the difference between the diameters) between any two sections does not exceed 2% of the mean value of D obtained from the measurements specified in para. 3-5.4(b). Moreover, the actual step caused by misalignment and/or change in diameter must not exceed 2% of D at any point of the internal circumference of the pipe. If the pipe diameter upstream of the step is greater than that downstream of it, the permitted diameter and actual steps are increased from 2% to 6% of D. On each side of the step, the pipe shall have a diameter between 0.98D and 1.06D. Beyond 10D from the nozzle, the use of gaskets between sections will not violate this requirement provided that in use they are no thicker than 3.2 mm (0.125 in.), and they do not protrude into the flow.

Beyond the first location where an expander could be fitted in accordance with Column 6A of Table 3-3, no additional uncertainty in the discharge coefficient is incurred provided the diameter step (the difference between the diameters) between any two sections does not exceed 10% of the mean value of D obtained from the measurements specified in para. 3-5.4(b). Moreover, the actual step caused by misalignment and/or change in diameter must not exceed 10% of D at any point of the internal circumference of the pipe. The first location where an expander could be fitted in accordance with Column 6A of Table 3-3 depends on the diameter ratio of the primary device, e.g., it is 22D from the primary device if $\beta = 0.6$.

(d) An additional uncertainty of 0.2% shall be added arithmetically to the uncertainty for the discharge coefficient if the diameter step ΔD between any two sections exceeds the limits given in para. 3-5.4(c), but complies with the following relationships:

$$\frac{\Delta D}{D} \le 0.002 \left(\frac{\frac{s}{D} + 0.4}{0.1 + 2.3\beta^4} \right) \tag{3-19}$$

$$\frac{\Delta D}{D} \le 0.05 \tag{3-20}$$

where s is the distance of the step from the upstream pressure tap or, if a carrier ring is used, from the upstream edge of the recess formed by the carrier ring.

(e) If a step is greater than any one of the limits given in the inequalities above, the installation is not in accordance with Part 3. For further guidance refer to para. 1-5.1(a) of this Standard.

(f) No diameter of the downstream straight length, considered along a length of a least 2D from the upstream face of an ISA 1932 nozzle or a long radius nozzle, shall differ from the mean diameter of the upstream straight length by more than 3%. This can be judged by checking a single diameter of the downstream straight length.

The diameter of the pipe immediately downstream of an untruncated venturi nozzle shall not be less than 90% of the diameter at the end of the divergent section. This means that, in most cases, pipes having the same nominal bore as that of the venturi nozzle tube can be used.

3-5.5 Location of Primary Device and Carrier Rings

(a) The primary device shall be placed in the pipe in such a way that the fluid flows from the upstream face towards the throat.

(b) The primary device shall be perpendicular to the centerline of the pipe to within 1 deg.

(c) The primary device shall be centered in the pipe. The distance e_x between the centerline of the throat and the centerlines of the pipe on the upstream and downstream sides shall be

$$e_x \le \frac{0.005D}{0.1 + 2.3\beta^4} \tag{3-21}$$

If e_x does not conform to Eq. (3-21), then it falls beyond the scope of this Standard.

(d) When carrier rings are used, they shall be centered such that they do not protrude into the pipe at any point.

3-5.6 Method of Fixing and Gaskets

(a) The method of fixing and tightening shall be such that once the primary device has been installed in the proper position, it remains so. When holding the primary device between flanges, it is necessary to allow for its free thermal expansion and to avoid buckling and distortion.

(b) Gaskets or sealing rings shall be made and inserted in such a way that they do not protrude at any point inside the pipe or across the pressure taps or slots when corner taps are used. They shall be as thin as possible, with due consideration taken in maintaining the relationship as defined in paras. 3-4.1.5(b) or 3-4.2.5(a) as appropriate.

(c) If gaskets are used between the primary device and the annular chamber rings, they shall not protrude inside the annular chamber.

Copyright ASME International
Provided by IHS under license with ASME
No reproduction or networking permitted without license from IHS

Not for Resale

NONMANDATORY APPENDIX 3A
TABLES OF DISCHARGE COEFFICIENTS AND EXPANSIBILITY FACTORS

Table 3A-1 ISA 1932 Nozzle: Discharge Coefficient, C

Diameter Ratio, β	Discharge Coefficient, C, for R_D Equal to								
	2 (10^4)	3 (10^4)	5 (10^4)	7 (10^4)	1 (10^5)	3 (10^5)	1 (10^6)	2 (10^6)	1 (10^7)
0.30	. . .	. . .	. . .	0.9855	0.9865	0.9878	0.9882	0.9883	0.9884
0.32	. . .	. . .	. . .	0.9847	0.9858	0.9873	0.9877	0.9878	0.9879
0.34	. . .	. . .	. . .	0.9838	0.9850	0.9866	0.9871	0.9872	0.9873
0.36	. . .	. . .	. . .	0.9828	0.9840	0.9859	0.9864	0.9865	0.9866
0.38	. . .	. . .	. . .	0.9816	0.9830	0.9849	0.9855	0.9856	0.9857
0.40	. . .	. . .	. . .	0.9803	0.9818	0.9839	0.9845	0.9846	0.9847
0.42	. . .	. . .	. . .	0.9789	0.9805	0.9827	0.9833	0.9834	0.9835
0.44	0.9616	0.9692	0.9750	0.9773	0.9789	0.9813	0.9820	0.9821	0.9822
0.45	0.9604	0.9682	0.9741	0.9764	0.9781	0.9805	0.9812	0.9813	0.9814
0.46	0.9592	0.9672	0.9731	0.9755	0.9773	0.9797	0.9804	0.9805	0.9806
0.47	0.9579	0.9661	0.9722	0.9746	0.9763	0.9788	0.9795	0.9797	0.9797
0.48	0.9567	0.9650	0.9711	0.9736	0.9754	0.9779	0.9786	0.9787	0.9788
0.49	0.9554	0.9638	0.9700	0.9726	0.9743	0.9769	0.9776	0.9777	0.9778
0.50	0.9542	0.9626	0.9689	0.9715	0.9733	0.9758	0.9766	0.9767	0.9768
0.51	0.9529	0.9614	0.9678	0.9703	0.9721	0.9747	0.9754	0.9756	0.9757
0.52	0.9516	0.9602	0.9665	0.9691	0.9709	0.9735	0.9743	0.9744	0.9745
0.53	0.9503	0.9589	0.9653	0.9678	0.9696	0.9722	0.9730	0.9731	0.9732
0.54	0.9490	0.9576	0.9639	0.9665	0.9683	0.9709	0.9717	0.9718	0.9719
0.55	0.9477	0.9562	0.9626	0.9651	0.9669	0.9695	0.9702	0.9704	0.9705
0.56	0.9464	0.9548	0.9611	0.9637	0.9655	0.9680	0.9688	0.9689	0.9690
0.57	0.9451	0.9534	0.9596	0.9621	0.9639	0.9664	0.9672	0.9673	0.9674
0.58	0.9438	0.9520	0.9581	0.9606	0.9623	0.9648	0.9655	0.9656	0.9657
0.59	0.9424	0.9505	0.9565	0.9589	0.9606	0.9630	0.9638	0.9639	0.9640
0.60	0.9411	0.9490	0.9548	0.9572	0.9588	0.9612	0.9619	0.9620	0.9621
0.61	0.9398	0.9474	0.9531	0.9554	0.9570	0.9593	0.9600	0.9601	0.9602
0.62	0.9385	0.9458	0.9513	0.9535	0.9550	0.9573	0.9579	0.9580	0.9581
0.63	0.9371	0.9442	0.9494	0.9515	0.9530	0.9551	0.9558	0.9559	0.9560
0.64	0.9358	0.9425	0.9475	0.9495	0.9509	0.9529	0.9535	0.9536	0.9537
0.65	0.9345	0.9408	0.9455	0.9473	0.9487	0.9506	0.9511	0.9512	0.9513
0.66	0.9332	0.9390	0.9434	0.9451	0.9464	0.9481	0.9487	0.9487	0.9488
0.67	0.9319	0.9372	0.9412	0.9428	0.9440	0.9456	0.9460	0.9461	0.9462
0.68	0.9306	0.9354	0.9390	0.9404	0.9414	0.9429	0.9433	0.9434	0.9435
0.69	0.9293	0.9335	0.9367	0.9379	0.9388	0.9401	0.9405	0.9405	0.9406
0.70	0.9280	0.9316	0.9343	0.9353	0.9361	0.9372	0.9375	0.9375	0.9376
0.71	0.9268	0.9296	0.9318	0.9326	0.9332	0.9341	0.9344	0.9344	0.9344
0.72	0.9255	0.9276	0.9292	0.9298	0.9303	0.9309	0.9311	0.9311	0.9312
0.73	0.9243	0.9256	0.9265	0.9269	0.9272	0.9276	0.9277	0.9277	0.9278
0.74	0.9231	0.9235	0.9238	0.9239	0.9240	0.9241	0.9242	0.9242	0.9242
0.75	0.9219	0.9213	0.9209	0.9208	0.9207	0.9205	0.9205	0.9205	0.9205
0.76	0.9207	0.9192	0.9180	0.9176	0.9172	0.9168	0.9166	0.9166	0.9166
0.77	0.9195	0.9169	0.9150	0.9412	0.9136	0.9128	0.9126	0.9126	0.9215
0.78	0.9184	0.9147	0.9118	0.9107	0.9099	0.9088	0.9084	0.9084	0.9803
0.79	0.9173	0.9123	0.9086	0.9071	0.9060	0.9045	0.9041	0.9040	0.9040
0.80	0.9162	0.9100	0.9053	0.9034	0.9020	0.9001	0.8996	0.8995	0.8994

GENERAL NOTE: The values given are not intended for precise interpolation. Extrapolation is not permitted.

Copyright ASME International
Provided by IHS under license with ASME
No reproduction or networking permitted without license from IHS
Not for Resale

Table 3A-2 Long Radius Nozzle: Discharge Coefficient, C

Diameter Ratio, β	Discharge Coefficient, C, for R_D Equal to								
	1 (10^4)	2 (10^4)	5 (10^4)	1 (10^5)	2 (10^5)	5 (10^5)	1 (10^6)	5 (10^6)	1 (10^7)
0.20	0.9673	0.9759	0.9834	0.9873	0.9900	0.9924	0.9936	0.9952	0.9956
0.22	0.9659	0.9748	0.9828	0.9868	0.9897	0.9922	0.9934	0.9951	0.9955
0.24	0.9645	0.9739	0.9822	0.9864	0.9893	0.9920	0.9933	0.9951	0.9955
0.26	0.9632	0.9730	0.9816	0.9860	0.9891	0.9918	0.9932	0.9950	0.9954
0.28	0.9619	0.9721	0.9810	0.9856	0.9888	0.9916	0.9930	0.9950	0.9954
0.30	0.9607	0.9712	0.9834	0.9852	0.9885	0.9914	0.9929	0.9949	0.9954
0.32	0.9596	0.9704	0.9828	0.9848	0.9882	0.9913	0.9928	0.9948	0.9953
0.34	0.9584	0.9696	0.9822	0.9845	0.9880	0.9911	0.9927	0.9948	0.9953
0.36	0.9573	0.9688	0.9816	0.9841	0.9877	0.9910	0.9926	0.9947	0.9953
0.38	0.9562	0.9680	0.9810	0.9838	0.9875	0.9908	0.9925	0.9947	0.9952
0.40	0.9552	0.9673	0.9805	0.9834	0.9873	0.9907	0.9924	0.9947	0.9952
0.42	0.9542	0.9666	0.9800	0.9831	0.9870	0.9905	0.9923	0.9946	0.9952
0.44	0.9532	0.9659	0.9795	0.9828	0.9868	0.9904	0.9922	0.9946	0.9951
0.46	0.9523	0.9652	0.9790	0.9825	0.9866	0.9902	0.9921	0.9945	0.9951
0.48	0.9513	0.9645	0.9785	0.9822	0.9864	0.9901	0.9920	0.9945	0.9951
0.50	0.9503	0.9639	0.9759	0.9819	0.9862	0.9900	0.9919	0.9944	0.9950
0.51	0.9499	0.9635	0.9756	0.9818	0.9861	0.9899	0.9918	0.9944	0.9950
0.52	0.9494	0.9632	0.9754	0.9816	0.9860	0.9898	0.9918	0.9944	0.9950
0.53	0.9490	0.9629	0.9752	0.9815	0.9859	0.9898	0.9917	0.9944	0.9950
0.54	0.9485	0.9626	0.9750	0.9813	0.9858	0.9897	0.9917	0.9944	0.9950
0.55	0.9481	0.9623	0.9748	0.9812	0.9857	0.9897	0.9917	0.9943	0.9950
0.56	0.9476	0.9619	0.9746	0.9810	0.9856	0.9896	0.9916	0.9943	0.9950
0.57	0.9472	0.9616	0.9745	0.9809	0.9855	0.9895	0.9916	0.9943	0.9949
0.58	0.9468	0.9613	0.9743	0.9808	0.9854	0.9895	0.9915	0.9943	0.9949
0.59	0.9463	0.9610	0.9741	0.9806	0.9853	0.9894	0.9915	0.9943	0.9949
0.60	0.9459	9.9607	0.9739	0.9805	0.9852	0.9893	0.9914	0.9942	0.9949
0.61	0.9455	0.9604	0.9737	0.9804	0.9851	0.9893	0.9914	0.9942	0.9949
0.62	0.9451	0.9601	0.9735	0.9802	0.9850	0.9892	0.9914	0.9942	0.9949
0.63	0.9447	0.9599	0.9733	0.9801	0.9849	0.9892	0.9913	0.9942	0.9949
0.64	0.9443	0.9596	0.9731	0.9800	0.9848	0.9891	0.9913	0.9942	0.9948
0.65	0.9439	0.9593	0.9730	0.9799	0.9847	0.9891	0.9912	0.9941	0.9948
0.66	0.9435	0.9590	0.9728	0.9797	0.9846	0.9890	0.9912	0.9941	0.9948
0.67	0.9430	0.9587	0.9726	0.9796	0.9845	0.9889	0.9912	0.9941	0.9948
0.68	0.9427	0.9584	0.9724	0.9795	0.9845	0.9889	0.9911	0.9941	0.9948
0.69	0.9423	0.9581	0.9722	0.9793	0.9844	0.9888	0.9911	0.9941	0.9948
0.70	0.9419	0.9579	0.9721	0.9792	0.9843	0.9888	0.9910	0.9941	0.9948
0.71	0.9415	0.9576	0.9719	0.9791	0.9842	0.9887	0.9910	0.9940	0.9948
0.72	0.9411	0.9573	0.9717	0.9790	0.9841	0.9887	0.9910	0.9940	0.9947
0.73	0.9407	0.9570	0.9715	0.9789	0.9840	0.9886	0.9909	0.9940	0.9947
0.74	0.9403	0.9568	0.9714	0.9787	0.9839	0.9886	0.9909	0.9940	0.9947
0.75	0.9399	0.9565	0.9712	0.9786	0.9839	0.9885	0.9908	0.9940	0.9947
0.76	0.9396	0.9562	0.9710	0.9875	0.9838	0.9884	0.9908	0.9940	0.9947
0.77	0.9392	0.9560	0.9709	0.9784	0.9837	0.9884	0.9908	0.9939	0.9947
0.78	0.9388	0.9557	0.9707	0.9783	0.9836	0.9883	0.9907	0.9939	0.9947
0.79	0.9385	0.9555	0.9705	0.9781	0.9835	0.9883	0.9907	0.9939	0.9947
0.80	0.9381	0.9552	0.9704	0.9780	0.9834	0.9882	0.9907	0.9939	0.9947

GENERAL NOTE: The values given are not intended for precise interpolation. Extrapolation is not permitted.

Copyright ASME International
Provided by IHS under license with ASME
No reproduction or networking permitted without license from IHS
Not for Resale

Table 3A-3 Venturi Nozzles: Discharge Coefficient, C

Diameter Ratio, β	Discharge Coefficient, C	Diameter Ratio, β	Discharge Coefficient, C
0.316	0.9847	0.550	0.9725
0.320	0.9846	0.560	0.9714
0.330	0.9845	0.570	0.9702
0.340	0.9843	0.580	0.9689
0.350	0.9841	0.590	0.9676
0.360	0.9838	0.600	0.9661
0.370	0.9836		
0.380	0.9833	0.610	0.9646
0.390	0.9830	0.620	0.9630
0.400	0.9826	0.630	0.9613
		0.640	0.9595
0.410	0.9823	0.650	0.9576
0.420	0.9818	0.660	0.9556
0.430	0.9814	0.670	0.9535
0.440	0.9809	0.680	0.9512
0.450	0.9804	0.690	0.9489
0.460	0.9798	0.700	0.9464
0.470	0.9792		
0.480	0.9786	0.710	0.9438
0.490	0.9779	0.720	0.9411
0.500	0.9771	0.730	0.9382
		0.740	0.9352
0.510	0.9763	0.750	0.9321
0.520	0.9755	0.760	0.9288
0.530	0.9745	0.770	0.9253
0.540	0.9736	0.775	0.9236

GENERAL NOTE: The values given are not intended for precise interpolation. Extrapolation is not permitted.

Table 3A-4 Nozzles and Venturi Nozzles: Expansibility Factor, ε (Y)

Diameter Ratio		Expansibility Factor, ε (Y), for p_2/p_1 Equal to								
β	β^4	1.00	0.98	0.96	0.94	0.92	0.90	0.85	0.80	0.75
					for $\kappa = 1.2$					
0.5623	0.1000	1.0000	0.9856	0.9712	0.9568	0.9423	0.9278	0.8913	0.8543	0.8169
0.6687	0.2000	1.0000	0.9834	0.9669	0.9504	0.9341	0.9178	0.8773	0.8371	0.7970
0.7401	0.3000	1.0000	0.9805	0.9613	0.9424	0.9238	0.9053	0.8602	0.8163	0.7733
0.7953	0.4000	1.0000	0.9767	0.9541	0.9320	0.9105	0.8895	0.8390	0.7909	0.7448
0.8000	0.4096	1.0000	0.9763	0.9533	0.9309	0.9091	0.8878	0.8367	0.7882	0.7418
					for $\kappa = 1.3$					
0.5623	0.1000	1.0000	0.9867	0.9734	0.9600	0.9466	0.9331	0.8990	0.8645	0.8294
0.6687	0.2000	1.0000	0.9846	0.9693	0.9541	0.9389	0.9237	0.8859	0.8481	0.8102
0.7401	0.3000	1.0000	0.9820	0.9642	0.9466	0.9292	0.9120	0.8697	0.8283	0.7875
0.7953	0.4000	1.0000	0.9785	0.9575	0.9369	0.9168	0.8971	0.8495	0.8039	0.7599
0.8000	0.4096	1.0000	0.9781	0.9567	0.9358	0.9154	0.8955	0.8473	0.8013	0.7570
					for $\kappa = 1.4$					
0.5623	0.1000	1.0000	0.9877	0.9753	0.9628	0.9503	0.9377	0.9058	0.8733	0.8402
0.6687	0.2000	1.0000	0.9857	0.9715	0.9573	0.9430	0.9288	0.8933	0.8577	0.8219
0.7401	0.3000	1.0000	0.9832	0.9667	0.9503	0.9340	0.9178	0.8780	0.8388	0.8000
0.7953	0.4000	1.0000	0.9800	0.9604	0.9411	0.9223	0.9038	0.8588	0.8154	0.7733
0.8000	0.4096	1.0000	0.9796	0.9597	0.9401	0.9210	0.9022	0.8567	0.8129	0.7705
					for $\kappa = 1.66$					
0.5623	0.1000	1.0000	0.9896	0.9791	0.9685	0.9578	0.9471	0.9197	0.8917	0.8629
0.6687	0.2000	1.0000	0.9879	0.9759	0.9637	0.9516	0.9394	0.9088	0.8778	0.8464
0.7401	0.3000	1.0000	0.9858	0.9718	0.9577	0.9438	0.9299	0.8953	0.8609	0.8265
0.7953	0.4000	1.0000	0.9831	0.9664	0.9499	0.9336	0.9176	0.8782	0.8397	0.8020
0.8000	0.4096	1.0000	0.9827	0.9658	0.9490	0.9325	0.9162	0.8763	0.8374	0.7994

GENERAL NOTE: The values given are not intended for precise interpolation. Extrapolation is not permitted. For some types of primary device, not all values of β are permissible.

Copyright ASME International
Provided by IHS under license with ASME
No reproduction or networking permitted without license from IHS
Not for Resale

Part 4
Venturi Meters

4-1 SCOPE AND FIELD OF APPLICATION

Part 4 specifies the geometry and method of use (installation and operating conditions) of venturi tubes when they are inserted in a conduit running full to determine the flow rate of the fluid flowing in the conduit.

Part 4 also provides background information for calculating the flow-rate and should be applied in conjunction with the requirements given in Part 1, which contains general material that applies to all the devices covered by the Standard, i.e., orifice plates, nozzles, and venturi tubes.

Part 4 applies only to venturi tubes in which the flow remains subsonic throughout the measuring section and is steady or varies only slowly with time and where the fluid can be considered as single-phase. It does not apply to the measurement of pulsating flow. In addition, these devices can only be used within specific limits of pipe size, roughness, diameter ratio, and Reynolds number. Thus, Part 4 cannot be used for nominal pipe sizes less than 50 mm (2 in.) or more than 1 200 mm (48 in.) or for pipe Reynolds numbers below 200 000.

Part 4 addresses the three types of ASME venturi tubes (as-cast, machined inlet, and fabricated weldment) and not venturi nozzles that differ in shape and in the position of the pressure taps. A venturi tube is a device that consists of a cylindrical entrance section, followed by a conical convergent inlet, connected to a cylindrical section called the *throat*, and a conical expanding section called the *divergent*. If the convergent inlet is a standardized ISA 1932 nozzle, the device is called a *venturi nozzle* (for more information on venturi nozzles, refer to Part 3 of this Standard). The differences in uncertainty values of the discharge coefficient for the three types of ASME venturi tube indicate typical manufacturing tolerances for each method of manufacture and the quantity of data for each type.

ASME venturi tubes as defined by this Standard are also known as Herschel venturi tubes or classical venturi tubes.

NOTE: Research into the use of venturi tubes in high-pressure gas [$p \geq 1$ MPa (145 psi)] is currently being carried out. In many cases, venturi tubes with machined convergent sections have been found to have discharge coefficients that lie outside the range predicted by this Standard by 2% or more. For optimum accuracy, venturi tubes used in gas applications should be calibrated over the required flow rate range.

4-2 REFERENCES AND RELATED DOCUMENTS

Normative references and definitions used within this document are contained in Part 1 of this Standard as are the associated symbols, subscripts, and definitions. References and related documents for this Part are listed below.

Jamieson, A.W., Johnson, P.A., Spearman, E.P., and Sattary, J.A., "Unpredicted Behaviour of Venturi Flowmeter in Gas at High Reynolds Numbers," Proceedings 14th North Sea Flow Measurement Workshop, Paper 5, Peebles, Scotland, 1996.

Van Weers, T., Van Der Beek, M.P., and Landheer, I.J., "Cd-Factor of Classical Venturi's [sic]: Gaming Technology?," Proceedings 9th International Conference on Flow Measurement (Flomeko), Lund, Sweden, June 1998: 203–207.

Reader-Harris, M.J., Brunton, W.C., Gibson, J.J., Hodges, D., and Nicholson, I.G., "Venturi Tube Discharge Coefficients," Proceedings 4th International Symposium on Fluid Flow Measurement, Denver, Colorado, June 1999.

Reader-Harris, M.J., Brunton, W.C., and Sattary, J.A., "Installation Effects on Venturi Tubes," Proceedings of ASME Fluids Engineering Division Summer Meeting, FEDSM97-3016, Vancouver, Canada, June 1997.

ISO/TR 3313:1998, Measurement of Fluid Flow in Closed Conduits—Guidelines on the Effects of Flow Pulsations on Flow-Measurement Instruments

ISO 4288:1996, Geometrical Product Specification (GPS)—Surface Texture: Profile Method—Rules and Procedures for the Assessment of Surface Texture

ISO/TR 5168:1998, Measurement of Fluid Flow—Evaluation of Uncertainties

ISO/TR 9464:1998, Guidelines for the Use of ISO 5167-1:1991

Publisher: International Organization for Standardization (ISO), 1 rue de Varembe, Case Postale 56, CH-1211, Geneve 20, Switzerland/Suisse

4-3 PRINCIPLES OF THE METHOD OF MEASUREMENT AND COMPUTATION

The principle of the method of measurement is based on the installation of the venturi tube into a pipeline in which a fluid is running full. In a venturi tube, a static

Copyright ASME International
Provided by IHS under license with ASME
No reproduction or networking permitted without license from IHS

Not for Resale

pressure difference exists between the upstream section and the throat section of the device. Given the same conditions of use, whenever the device is geometrically similar to one on which direct calibration has been made, the rate of flow can be determined from the measured value of this pressure difference and from a knowledge of the fluid conditions.

The mass rate of flow can be determined by the following equation:

(SI Units)

$$q_m = \frac{C}{\sqrt{1-\beta^4}}\ \varepsilon\ \frac{\pi}{4}\ d^2\ \sqrt{2\Delta p \rho_1} \qquad (4\text{-}1)$$

(U.S. Customary Units)

$$q_m = 0.09970190 C Y d^2 \sqrt{\frac{h_w \rho_1}{1-\beta^4}}$$

Δp (h_w) represents the differential pressure, as defined in Part 1 of this Standard. The diameters d and D mentioned in the equations are the values of the diameters at the working conditions. Measurements taken at any other conditions must be corrected for any possible expansion or contraction of the primary device and the pipe due to the temperature and pressure of the fluid during measurement.

The value of the volume rate of flow can be simply calculated since

$$q_v = \frac{q_m}{\rho} \qquad (4\text{-}2)$$

where ρ is the fluid density at the temperature and pressure for which the volume is stated.

The uncertainty limits can be calculated using the procedure given in para. 1-7 of this Standard.

Computation for flow rate is performed by replacing the different terms on the right-hand side of the Eq. (4-1) by their numeric values. It is necessary to know the density and the viscosity of the fluid at the working conditions. In the case of a compressible fluid, it is also necessary to know the isentropic exponent of the fluid at the working conditions. Table 4A-1 of this Standard provides venturi tube expansibility factors, ε (Y), for different working conditions. This table is not intended for precise interpolation and extrapolation is not permitted.

4-4 ASME VENTURI TUBES

4-4.1 Application

The application of the ASME venturi tubes dealt with in this part of this Standard depends on their method of manufacture.

Three types of standard ASME venturi tube are defined according to the method of manufacture of the internal surface of the entrance cone and the profile at the intersection of the entrance cone and the throat. These three methods of manufacture are described in paras. 4-4.1.1 to 4-4.1.3 and have different characteristics. There are also limits to the surface roughness and Reynolds number for each type that must be addressed.

4-4.1.1 ASME Venturi Tube With an "As-Cast" Convergent Section. This is an ASME venturi tube made by casting in a sand mold or by other methods that leave a finish on the surface of the convergent section similar to that produced by sand casting. The throat is machined and the junctions between the cylinders and cones are rounded. These ASME venturi tubes can be used in pipes of diameter between 100 mm (4 in.) and 1 200 mm (48 in.) and having diameter ratios between 0.30 and 0.75, inclusive.

4-4.1.2 ASME Venturi Tube With a Machined Convergent Section. This is an ASME venturi tube in which the convergent section is machined, as are the throat and the cylindrical entrance. The junctions between the cylinders and cones are rounded. These ASME venturi tubes can be used in pipes of diameter between 50 mm (2 in.) and 250 mm (10 in.) and having diameter ratios between 0.30 and 0.75, inclusive.

4-4.1.3 ASME Venturi Tube With a Rough-Welded Convergent Section. This is an ASME venturi tube normally fabricated by welding. Machining of the contour is not necessary provided the tolerances outlined in paras. 4-4.2 through 4-4.2.6 and 4-4.2.9. These ASME venturi tubes can be used in pipes of diameter between 100 mm (4 in.) and 1 200 mm (48 in.) and having diameter ratios between 0.30 and 0.75, inclusive.

4-4.2 Geometric Profile for the ASME Venturi Tube

Figure 4-1 shows a section through the centerline of the throat of an ASME venturi tube. The letters used in the text refer to those shown on Fig. 4-1. The ASME venturi tube is made up of an entrance cylinder, A connected to a conical convergent section, B, a cylindrical throat, C, and a conical divergent section, E. The internal surface of the device is cylindrical and concentric with the pipe centerline. All sections are concentric and coaxial with the centerline of the venturi tube as assessed by visual inspection.

4-4.2.1 Entrance Section. The entrance section, A, shall have an inside diameter D that shall not differ from the pipe inside diameter by more than $0.01D$. The length of the entrance section is typically no less than D when measured from the plane containing the intersection of the cone frustum, B, with the entrance section, A. The length, however, can vary as a result of the manufacturing process (see paras. 4-4.2.7 to 4-4.2.9).

The entrance cylinder diameter, D, shall be measured in the plane of the upstream pressure taps. The measurements shall be equally spaced. The number of measurements shall be at least equal to the number of pressure taps, with a minimum of four.

The diameters shall be measured near each pair of pressure taps, and also between these pairs. The arithmetic

Copyright ASME International
Provided by IHS under license with ASME
No reproduction or networking permitted without license from IHS
Not for Resale

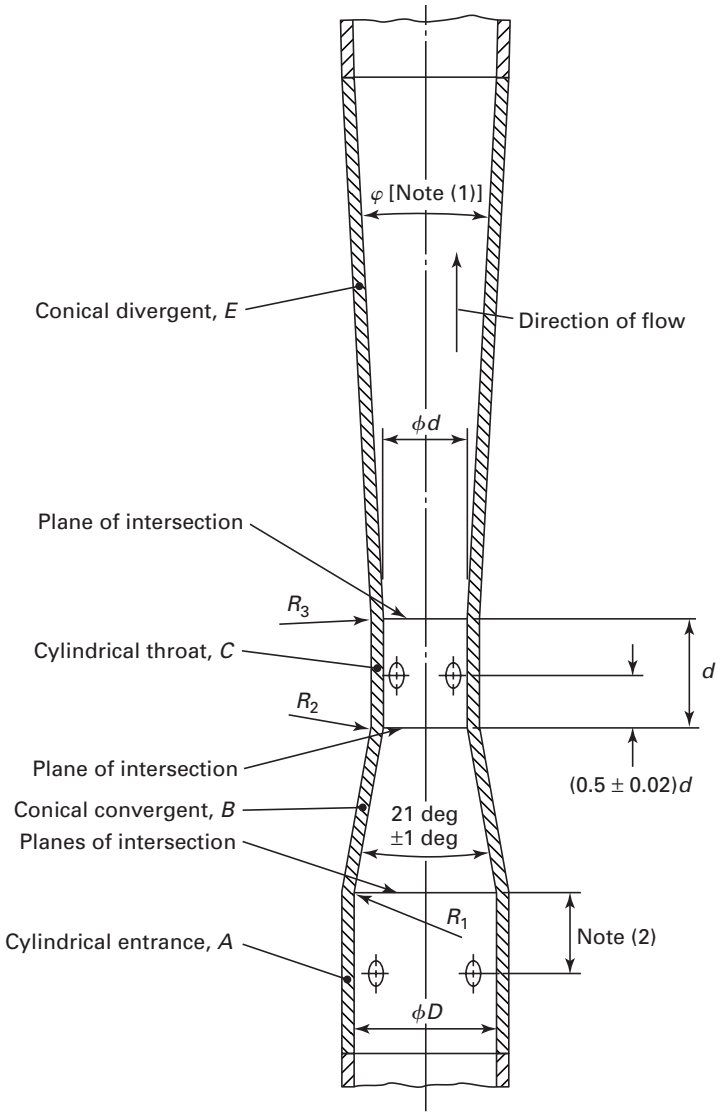

NOTES:
(1) 7 deg ≤ φ ≤ 15 deg.
(2) See para. 4-4.4.7.

Fig. 4-1 Geometric Profile of the ASME Venturi Tube

mean value of these measurements shall be taken as the value of D in the calculations. Diameters shall also be measured in planes other than the plane of the pressure taps. No diameter along the entrance cylinder shall differ by more than 0.4% from the value of the mean diameter.

4-4.2.2 The Convergent Section. The convergent section, B shall be conical and shall have an included angle, ϕ, of 21 deg ± 1 deg for all types of ASME venturi tube. It is limited upstream by the plane containing the intersection (or prolongations) of the cone frustum, B with the entrance cylinder, A, and downstream by the plane containing the intersection (or prolongations) of the cone frustum, B, with the throat, C.

The overall length of the convergent B measured parallel to the centerline of the venturi tube is approximately equal to $2.7(D - d)$. The convergent section, B is blended to the entrance cylinder, A, by a curvature of radius R_1, the value of which depends on the type of ASME venturi tube. The profile of the convergent section shall be checked by means of a template. The deviation between the template and the conical section of the convergent section shall not exceed, in any place, 0.5% of D.

Copyright ASME International
Provided by IHS under license with ASME
No reproduction or networking permitted without license from IHS
Not for Resale

The internal surface of the conical section of the convergent section is taken as being a surface of revolution if two diameters situated in the same plane perpendicular to the axis of revolution do not differ from the value of the mean diameter by more than 0.4%. It shall be checked in the same way that the joining curvature with a radius R_1 is a surface of revolution.

4-4.2.3 The Throat Section. The throat, C, shall be cylindrical with an inside diameter, d. It is limited upstream by the plane containing the intersection (or prolongations) of the cone frustum, B, with the throat, C and downstream by the plane containing the intersection (or prolongations) of the throat, C, with the cone frustum, E. The length of the throat, C, shall be equal to $d \pm 0.03d$ regardless of method of manufacture.

The throat, C is connected to the convergent section, B, by a curvature of radius R_2 and to the divergent section, E by a curvature of radius R_3. The values of R_2 and R_3 depend on the type of ASME venturi tube.

The diameter, d shall be measured in the plane of the throat pressure taps in such a manner as to minimize the uncertainty of the measurement. The number of measurements shall be at least equal to the number of pressure taps (with a minimum of four). The diameters shall be measured near each pair of pressure taps and also between these pairs. The arithmetic mean value of all these measurements shall be taken as the value of d in the calculations.

Diameters shall also be measured in planes other than the plane of the pressure taps. No diameter along the throat shall differ by more than 0.1% of the value of the mean diameter.

The throat of the ASME venturi tube shall be machined or be of equivalent smoothness over the whole of its length to the surface roughness specified in para. 4-4.2.6. The throat shall be checked that the joining curvatures into the throat with radii R_2 and R_3 are surfaces of revolution as described in para. 4-4.2.2. This requirement is satisfied when two diameters, situated in the same plane perpendicular to the axis of revolution, do not differ from the value of the mean diameter by more than 0.1%.

The values of the radii of curvature R_2 and R_3 shall be checked by means of a template. The deviation between the template and the ASME venturi tube shall evolve in a regular way for each curvature so that the single maximum deviation that is measured occurs at approximately midway along the template profile. The value of this maximum deviation shall not exceed $0.02d$.

4-4.2.4 The Divergent Section. The divergent section, E, shall be conical and shall have an included angle between 7 deg and 15 deg. Its smallest diameter shall not be less than the throat diameter. This Standard provides pressure loss values for meters with divergent section included angles of 7 deg and 15 deg only; no information is given for intermediate angles.

4-4.2.5 Truncation. An ASME venturi tube is called *truncated* when the outlet diameter of the divergent section is less than the diameter, D and *not truncated* or *full* when the outlet diameter is equal to diameter, D. The divergent portion can be truncated up to 35% of its length without altering the value or tolerance of the discharge coefficient. Such truncation, however, will increase the pressure loss of the device. This Standard provides pressure loss values for divergent sections without truncation; no information is given for truncated recovery sections.

4-4.2.6 Roughness. The roughness criterion R_a of the throat and that of the adjacent radii shall be as small as possible and shall always be less than $10^{-4}d$. The divergent section is typically unmachined. Its internal surface shall be clean and smooth. Other parts of the ASME venturi tube have specified roughness limits depending on the type considered.

4-4.2.7 Characteristics of an ASME Venturi Tube With an "As-Cast" Convergent Section. The internal surface of the convergent section, B, is sand-cast. It shall be free from cracks, fissures, depressions, irregularities, and impurities. The roughness criterion R_a for the convergent surface shall be less than $10^{-4}D$.

The minimum length of the entrance cylinder, A, shall be equal to the smaller of the following two values: D and $0.25D + 250$ mm (10 in.) (see para. 4-4.2.1). The internal surface of the entrance cylinder, A, may be left "as-cast" provided that it has the same surface finish as the convergent section, B.

The radius of curvature R_1 shall be equal to $1.375D \pm 0.275D$. The radius of curvature R_2 shall be equal to $3.625d \pm 0.125d$.

The length of the cylindrical part of the throat shall be not less than $d/3$. In addition, the length of the cylindrical part between the end of the radius R_2 and the plane of the pressure taps, as well as the length of the cylindrical part between the plane of the throat pressure taps and the beginning of the radius R_3, shall be not less than $d/6$ (see also para. 4-4.2.3 for the throat length).

The radius of curvature R_3 shall lie between $5d$ and $15d$. Its value increases as the divergent angle decreases. A value of approximately $10d$ is recommended.

4-4.2.8 Characteristics of an ASME Venturi Tube With a Machined Convergent Section. The minimum length of the entrance cylinder, A, shall be equal to D. The entrance cylinder and the convergent section shall have a surface finish equal to that of the throat (see para. 4-4.2.6).

The radius of curvature R_1 shall be $0.25D \pm 0.05D$. The radius of curvature R_2 shall be $0.25d \pm 0.05d$. The length of the cylindrical throat, C, shall be equal to $d \pm 0.03d$.

In addition, the length of the cylindrical part between the end of the radius R_2 and the plane of the pressure taps, as well as the length of the cylindrical part between the plane of the throat pressure taps and the beginning

Copyright ASME International
Provided by IHS under license with ASME
No reproduction or networking permitted without license from IHS
Not for Resale

of the radius R_3, shall be no less than $0.5d \pm 0.015d$ (see also para. 4-4.2.3 for the throat length). The radius of curvature R_3 shall be $0.25d \pm 0.05d$.

4-4.2.9 Characteristics of an ASME Venturi Tube With a Rough-Welded Convergent Section. The minimum length of the entrance cylinder, *A*, shall be equal to *D*. There shall be no joining curvature between the entrance cylinder, *A*, and the convergent section, *B*, other than that resulting from welding. There shall be no joining curvature between the convergent section, *B*, and the throat, *C*, other than that resulting from welding. There shall be no joining curvature between the throat, *C*, and the divergent section, *E*. The internal surface of the entrance cylinder, *A*, and the convergent section, *B* shall be clean and free from encrustation and welding deposits. The roughness criterion R_a for the surface shall be about 5 $(10^{-4})D$. The internal welded seams shall be flush with the surrounding surfaces. They shall not be located in the vicinity of the pressure taps.

4-4.3 Materials and Manufacture

(a) Materials. The ASME venturi tube can be manufactured from any material, provided that it is in accordance with the foregoing description and will remain so during use.

(b) It is recommended that the convergent section, *B*, and the throat, *C*, be joined as one part. It is recommended that in the case of a machined convergent, the throat and the convergent section be manufactured from one piece of material. If made in two separate parts they shall be assembled before the internal surface is finally machined.

(c) Particular care shall be given to the centering of the divergent section, *E*, on the throat, *C*. There shall be no step in diameters between the two parts. This can be established either visually or by touch.

4-4.4 Pressure Taps

4-4.4.1 The upstream and throat pressure taps shall be made in the form of separate pipe wall pressure taps interconnected by annular chambers or piezometer rings or, if there are four taps, a "Triple-T" arrangement (see para. 1-4.4.3 of this Standard).

4-4.4.2 Tap Size. If *d* is greater than or equal to 33.3 mm (1.30 in.), the diameter of these taps shall be between 4 mm (0.15 in.) and 10 mm (0.40 in.), but shall never be greater than $0.1D$ for the upstream taps and $0.13d$ for the throat pressure taps. If *d* is less than 33.3 mm (1.30 in.), the diameter of the throat pressure taps shall be between $0.1d$ and $0.13d$ and the diameter of the upstream pressure taps shall be between $0.1d$ and $0.1D$. It is recommended that pressure taps as small as compatible with the fluid be used, e.g., viscosity and clarity.

4-4.4.3 Number of Pressure Taps. At least four pressure taps shall be provided for the upstream and throat pressure measurements. The centerlines of the pressure taps shall meet the centerline of the ASME venturi tube, shall form equal angles with each other and shall be contained in planes perpendicular to the centerline of the ASME venturi tube.

4-4.4.4 Quality of Pressure Taps. The hole on the inside wall of the pipe shall be circular. The edges shall be flush with the internal surface of the pipe wall and as sharp as possible. To ensure the elimination of all burrs or wire edges at the inner edge, rounding is permitted, but shall have a radius less than one-tenth of the pressure tap diameter. No irregularity shall appear inside the connecting hole, on the edges of the hole drilled in the pipe wall, or on the pipe wall close to the pressure tap.

4-4.4.5 Length of Pressure Taps. The pressure taps shall be cylindrical over a length at least 2.5 times the internal diameter of the tap measured from the inner wall of the pipeline.

4-4.4.6 Location of Pressure Taps. The location of a pressure tap is the distance, measured on a straight line parallel to the centerline of the ASME venturi tube, between the centerline of the pressure tap and the reference planes defined below.

For the ASME venturi tube with an "as-cast" convergent section, the spacing between the upstream pressure taps situated on the entrance cylinder (A) and the plane of intersection between the entrance cylinder (A) and the prolongation of convergent section (B) shall be:

(a) $0.5D \pm 0.25D$ for 100 mm (4 in.) $\leq D \leq$ 150 mm (6 in.)

(b) $0.5D$ $(+\ 0.0D, -\ 0.25D)$ for 150 mm (6 in.) $< D \leq$ 1 200 mm (48 in.)

For ASME venturi tubes with a machined convergent section and with a rough-welded convergent, the spacing between the upstream pressure taps and the plane of intersection between the entrance cylinder, *A*, and the convergent section, *B* (or their prolongations) shall be $0.5D \pm 0.05D$.

For all types of ASME venturi tube, the spacing between the plane containing the axes of the points of breakthrough of the throat pressure taps and the intersection plane of the convergent section, *B*, and the throat, *C* (or their prolongations) shall be $0.5d \pm 0.02d$.

4-4.4.7 Pressure Taps With Annular Chambers. The area of the free cross-section of the annular chamber of the pressure taps shall be greater than or equal to half the total area of the tap holes connecting the chamber to the pipe. It is recommended, however, that the chamber section mentioned above shall be doubled when the ASME venturi tube is used with a minimum upstream straight length from a fitting causing asymmetric flow.

4-4.5 Discharge Coefficient, *C*

4-4.5.1 Limits of Use. Whatever the type of ASME venturi tube, a simultaneous use of extreme values for *D*,

Copyright ASME International
Provided by IHS under license with ASME
No reproduction or networking permitted without license from IHS

Not for Resale

β, and R_D should be avoided because the uncertainties given in para. 4-4.7 will likely be greater. For installations outside the limits defined in paras. 4-4.5.2, 4-4.5.3, and 4-4.5.4 for D, β, and R_D, it remains necessary to calibrate separately the primary element in its actual conditions of service. The effects of D, β, and R_a/D on C are not yet sufficiently known for it to be possible to give reliable values of C outside the limits defined for each type of ASME venturi tube (See Nonmandatory Appendix 4B).

4-4.5.2 Discharge Coefficient of the ASME Venturi Tube With an "As-Cast" Convergent Section. ASME venturi tubes with an "as-cast" convergent section can only be used in accordance with this Part of this Standard when

(a) 100 mm (4 in.) $\leq D \leq$ 1 200 mm (48 in.)
(b) $0.30 \leq \beta \leq 0.75$
(c) 2 (10^5) $\leq R_D \leq$ 6 (10^6)

Under these conditions, the value of the discharge coefficient, $C = 0.984$.

4-4.5.3 Discharge Coefficient of the ASME Venturi Tube With a Machined Convergent Section. ASME venturi tubes with a machined convergent section can only be used in accordance with Part 4 when

(a) 50 mm (2 in.) $\leq D \leq$ 250 mm (10 in.)
(b) $0.30 \leq \beta \leq 0.75$
(c) 2 (10^5) $\leq R_D \leq$ 6 (10^6)

Under these conditions, the value of the discharge coefficient, $C = 0.995$.

4-4.5.4 Discharge Coefficient of the ASME Venturi Tube With a Rough-Welded Convergent Section. ASME venturi tubes with a rough-welded convergent section can only be used in accordance with Part 4 when

(a) 100 mm (4 in.) $\leq D \leq$ 1 200 mm (48 in.)
(b) $0.30 \leq \beta \leq 0.75$
(c) 2 (10^5) $\leq R_D \leq$ 6 (10^6)

Under these conditions, the value of the discharge coefficient, $C = 0.985$.

4-4.6 Expansibility Factor

The expansibility factor, $\varepsilon(Y)$, is calculated by means of the following equation:

$$\varepsilon(Y) = \left\{\left(\frac{\kappa\tau^{2/\kappa}}{\kappa - 1}\right)\left(\frac{1 - \beta^4}{1 - \beta^4\tau^{2/\kappa}}\right)\left[\frac{1 - \tau^{(\kappa-1)/\kappa}}{1 - \tau}\right]\right\}^{0.5} \quad (4\text{-}3)$$

where

τ = pressure ratio (P_2/P_1)
κ = isentropic exponent

This equation is applicable only for values of D, β, and R_D as specified in 4-4.5.2, 4-4.5.3, or 4-4.5.4, as appropriate. Test results for determination of $\varepsilon(Y)$ are only known for air, steam, and natural gas. There is no known objection to using the same equation for other gases for which the isentropic exponent is known. The equation is applicable, however, only if $P_2/P_1 \geq 0.80$.

Values of the expansibility factor $\varepsilon(Y)$ for a range of isentropic exponents, pressure ratios, and diameter ratios are given for convenience in Table 4A-1 of this Standard. This table is not intended for precise interpolation and extrapolation is not permitted.

4-4.7 Uncertainty of the Discharge Coefficient, *C*

4-4.7.1 ASME Venturi Tube With an "As-Cast" Convergent Section. The relative uncertainty of the discharge coefficient as given in para. 4-4.5.2 is equal to 0.75%.

4-4.7.2 ASME Venturi Tube With a Machined Convergent Section. The relative uncertainty of the discharge coefficient as given in para. 4-4.5.3 is equal to 1.0%.

4-4.7.3 ASME Venturi Tube With a Rough-Welded Convergent Section. The relative uncertainty of the discharge coefficient as given in para. 4-4.5.4 is equal to 1.5%.

4-4.8 Uncertainty of the Expansibility Factor, $\varepsilon(Y)$

The relative uncertainty, in percent, of $\varepsilon(Y)$ is equal to

(SI Units)

$$\pm (4 + 100\,\beta^8)(\Delta p/p_1) \quad (4\text{-}4)$$

(U.S. Customary Units)

$$\pm (4 + 100\,\beta^8)(0.03606247 h_w/p_1)$$

This uncertainty assumes that β, Δp (h_w), p_1, and κ (the isentropic exponent of the line fluid) are known without error.

4-4.9 Pressure Loss

4-4.9.1 Definition of the Pressure Loss. The pressure loss caused by an ASME venturi tube can be determined by pressure measurements made prior and subsequent to the installation of the venturi tube in a pipe through which there is a given flow.

In Fig. 4-2, $\Delta p'$ is the pressure difference measured between a point at least 1D upstream from the upstream end of the venturi and a point 6D downstream from the downstream end of the venturi, prior to installation of the venturi tube. $\Delta p''$ is the difference in pressure measured between the same pressure taps after installation of the venturi. The pressure loss caused by the venturi tube is given by $\Delta p'' - \Delta p'$.

4-4.9.2 Relative Pressure Loss. The relative pressure loss, ξ, is the ratio value of the pressure loss $\Delta p'' - \Delta p'$ related to the differential pressure Δp (h_w):

(SI Units)

$$\xi = \frac{\Delta p'' - \Delta p'}{\Delta p} \quad (4\text{-}5)$$

(U.S. Customary Units)

$$\xi = \frac{\Delta p'' - \Delta p'}{h_w}$$

Copyright ASME International
Provided by IHS under license with ASME
No reproduction or networking permitted without license from IHS
Not for Resale

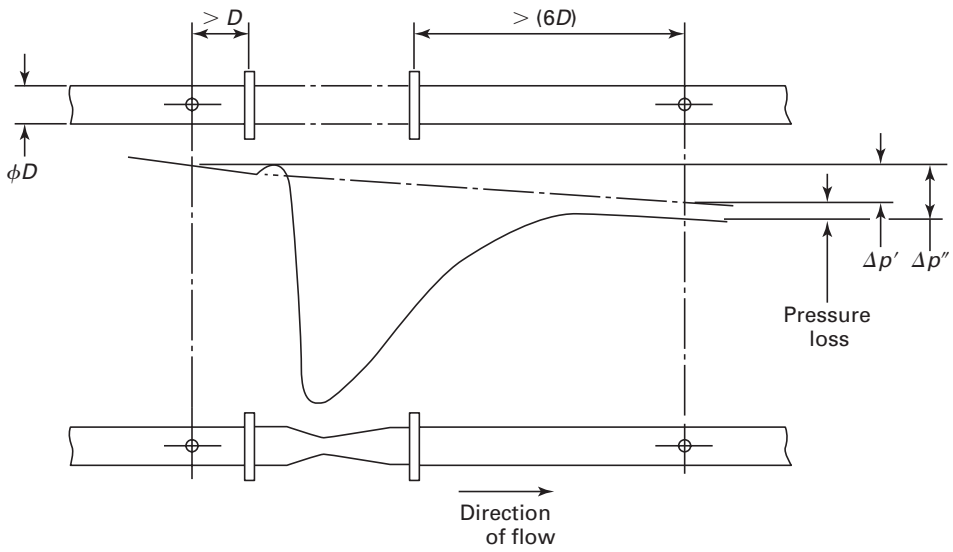

Fig. 4-2 Pressure Loss Across an ASME Venturi Tube

The relative pressure loss depends on

(a) the diameter ratio (ξ decreases when β increases)

(b) the Reynolds number (ξ decreases when R_D increases)

(c) the gross and fine geometry of the venturi tube, e.g., angle of the divergent, manufacturing of the convergent, surface finish of the different parts, etc. (ξ increases when ϕ and R_a/D increase)

(d) the installation conditions (good alignment, roughness of the upstream conduit, etc.)

For guidance, the relative value of the pressure loss can be accepted as being generally between 5% and 20%. Nonmandatory Appendix 4B also provides some information on the effect of these different factors on the pressure loss values.

4-5 INSTALLATION REQUIREMENTS

4-5.1 General

General installation requirements for pressure differential devices are contained in para. 1-6 of this Standard and shall be followed in conjunction with the additional installation requirements for venturi tubes given in this section. The general requirements for flow conditions at the primary device are given in para. 1-6.3 of this Standard. The requirements for use of a flow conditioner are given in para. 1-6.4 of this Standard. For some commonly used fittings shown in Table 4-1, the minimum straight lengths of pipe indicated shall be used. Detailed requirements are given in para. 4-5.2.

4-5.2 Minimum Upstream and Downstream Straight Pipe Length Requirements

(a) The minimum straight lengths of pipe to be installed upstream of the ASME venturi tube and following the various fittings in the installation without flow conditioners or straighteners are given in Table 4-1.

For devices with the same β, the lengths specified in Table 4-1 for ASME venturi tubes are shorter than those specified in Parts 2 and 3 of this Standard for orifice plates, nozzles, and venturi nozzles. This is due to the attenuation of flow nonuniformities taking place within the contraction section of the ASME venturi tube.

(b) When a flow conditioner or straightener is not used, the lengths specified in Table 4-1 must be regarded as the minimum values. For research and calibration work, it is recommended that the upstream values specified in Table 4-1 be increased as much as reasonably possible.

(c) When the straight lengths used are equal to or longer than the values specified in each Column A of Table 4-1 for "zero additional uncertainty," it is not necessary to increase the uncertainty in discharge coefficient to take account of the effect of the particular installation. Although termed "uncertainty" in this instance, using upstream lengths shorter than those given each Column A of Table 3-3 will result in flow measurement bias errors. Furthermore, orientation of the pressure taps with respect to the various fittings can affect the magnitude of the bias error.

(d) For a given fitting, when the upstream straight length is greater than or equal to the "0.5% Additional Uncertainty" value shown in each Column B of Table 4-1 and shorter than the value corresponding to "Zero Additional Uncertainty" (as shown in each Column A), an additional uncertainty of 0.5% shall be added arithmetically to the uncertainty in the discharge coefficient. As detailed in para. 4-5.2(c), although termed "uncertainty" in this instance, when using upstream straight length greater than or equal to the value shown in each Column B of Table 3-3 and shorter than the value corresponding to shown in each Column A of Table 3-3, a

Copyright ASME International
Provided by IHS under license with ASME
No reproduction or networking permitted without license from IHS
Not for Resale

Table 4-1 Required Straight Lengths for Classical Venturi Tubes

Diameter Ratio, β	Single 90 deg Bend [Note (1)]		Two or More 90 deg Bends in Same or Different Planes [Note (1)]		Reducer 1.33D to D Over Length of 2.3D		Expander 0.67D to D Over Length of 2.5D		Reducer 3D to D over Length of 3.5D		Expander 0.75D to D Over Length of D		Full Bore Ball or Gate Valve Fully Open	
1	2		3		4		5		6		7		8	
	A	B	A	B	A	B	A	B	A	B	A	B	A	B
0.30	8	3	8	3	4	Note (2)	4	Note (2)	2.5	Note (2)	2.5	Note (2)	2.5	Note (2)
0.40	8	3	8	3	4	Note (2)	4	Note (2)	2.5	Note (2)	2.5	Note (2)	2.5	Note (2)
0.50	9	3	10	3	4	Note (2)	5	4	5.5	2.5	2.5	Note (2)	3.5	2.5
0.60	10	3	10	3	4	Note (2)	6	4	8.5	2.5	3.5	2.5	4.5	2.5
0.70	14	3	18	3	4	Note (2)	7	5	10.5	2.5	5.5	3.5	5.5	3.5
0.75	16	8	22	8	4	Note (2)	7	6	11.5	3.5	6.5	4.5	5.5	3.5

GENERAL NOTES:

(a) Values expressed as multiples of internal diameter D.

(b) The minimum straight lengths required are the lengths between various fittings located upstream of the classical Venturi tube and the classical Venturi tube itself. Straight lengths shall be measured from the downstream end of the curved portion of the nearest (or only) bend or the downstream end of the curved or conical portion of the reducer or expander to the upstream pressure tapping plane of the classical Venturi tube.

(c) If temperature pockets or wells are installed upstream of the classical Venturi tube, they shall not exceed 0.13D in diameter and shall be located at least 4D upstream of the upstream tapping plane of the Venturi tube.

(d) For downstream straight lengths, fittings or other disturbances (as indicated in this Table) or densitometer pockets situated at least four throat diameters downstream of the throat pressure tapping plane do not affect the accuracy of the measurement (see paras. 4-5.2(c) and 4-5.2(e)).

(e) Column A for each fitting gives lengths corresponding to "zero additional uncertainty" values (see para. 4-5.2(c)).

(f) Column B for each fitting gives lengths corresponding to "0.5% additional uncertainty" values (see para. 4-5.2(d)).

NOTES:

(1) The radius of curvature of the bend shall be greater than or equal to the pipe diameter.

(2) The straight length in each Column A gives zero additional uncertainty, data are not available for shorter straight lengths that could be used to give the required straight lengths for each Column B.

flow measurement bias error less than 0.5% will be introduced. Since both the direction (positive or negative) and the magnitude of this error are specific to the installation in question, this Standard addresses this unknown bias error as an increase in the uncertainty band.

(e) Part 4 of this Standard cannot be used to predict the value of any additional uncertainty when the upstream straight length is shorter than the "0.5% Additional Uncertainty" values specified in each Column B of Table 4-1, nor when the downstream straight length is shorter than the value specified in Note (d) of Table 4-1.

(f) The valves included in Table 4-1 shall be set fully open during the flow measurement process. It is recommended that control of the flow rate be achieved by valves located downstream of the venturi tube. Isolating valves located upstream of the venturi tube shall be set fully open, and these valves shall be full bore. The valve should be fitted with stops for alignment of the ball or gate, in the open position.

(g) Upstream valves that are bored to match the inside diameter of the adjacent pipe and are designed in such a manner that in the fully opened condition there are no steps can be regarded as part of the upstream pipe length and do not need to have added lengths as in Table 4-1.

(h) The values given in Table 4-1 were determined experimentally with fully developed and swirl-free flow upstream of the subject fitting. Since in practice such conditions are difficult to achieve, the following information can be used as a guide for normal installation practice.

(1) If several fittings of the type covered by Table 4-1 (other than the combinations of 90 deg bends already covered by this Table) are placed in series upstream of the venturi tube, the following shall be applied:

(a) The minimum length criterion given in Table 4-1 must be adopted for the fitting immediately upstream of the venturi tube (Fitting 1) and the venturi tube itself.

(b) Between Fitting 1 and the Next Fitting Farther From the Venturi Tube (Fitting 2). Irrespective of the actual β of the venturi tube used, a minimum straight length equal to half the number of diameters given in Table 4-1 for a 0.7 diameter ratio venturi tube used in conjunction with Fitting 2 must be included between Fittings 1 and 2.

Copyright ASME International
Provided by IHS under license with ASME
No reproduction or networking permitted without license from IHS
Not for Resale

If either of the minimum straight lengths is selected from each Column B of Table 4-1, a 0.5% additional uncertainty shall be added arithmetically to the discharge coefficient uncertainty. If the length between two or more consecutive 90 deg bends is less than 15*D*, these shall be treated as a single fitting (two-bend combination) in accordance with Table 4-1, Column 1.

(c) If the upstream metering section has a full bore valve preceded by another fitting, then the valve can be installed at the outlet of the second fitting from the primary device. The length between the valve and the second fitting shall be added to the length between the primary device and the first fitting, specified in Table 4-1 (Fig. 4-3). Paragraph 4-5.2(h)(2) must also be satisfied (as it is in Fig. 4-3).

(2) In addition to the rule in para. 4-5.2(h)(1), any fitting (treating any two consecutive 90 deg bends as a single fitting) must be located at a distance from the venturi tube at least as great as that given in Table 4-1. This is regardless of the number of fittings between the fitting in question and the venturi tube.

The distance between the venturi tube and the fitting shall be measured along the pipe axis. If the distance meets this requirement using the number of diameters in each Column B, but not that in each Column A, then a 0.5% additional uncertainty shall be added arithmetically to the discharge coefficient uncertainty. This additional uncertainty shall not be added more than once under the provisions of paras. 4-5.2(h)(1) and 4-5.2(h)(2).

(i) Two examples of the application of paras. 4-5.2(h)(1) and 4-5.2(h)(2) are considered. In each case, the second fitting from the venturi tube is a two-bend combination in perpendicular planes and the nozzle or venturi nozzle has diameter ratio 0.75.

EXAMPLES:

(1) If the first fitting is a full bore ball valve fully open (see Fig. 4-4, sketch (a)), the distance between the valve and the venturi tube must be at least 5.5*D* (from Table 4-1). Furthermore, between the two-bend combination in perpendicular planes and the valve, there must be at least 9.5*D* [from para. 4-5.2(h)(1)], and the distance between the two-bend combination in perpendicular planes and the venturi tube, there must be at least 22*D* [from para. 4-5.2(h)(2)]. If the valve has length 1*D*, an additional length of 6.5*D* is required. This length can be upstream, downstream, or partly upstream and partly downstream of the valve. Paragraph 4-5.2(h)(1)(c) could also be used to move the valve to be adjacent to the two-bend combination in perpendicular planes provided that there is at least 22*D* from the two-bend combination in perpendicular planes to the venturi tube (see Fig. 4-4, sketch (b)).

(2) If the first fitting is an increaser from 0.67*D* to *D* over a length of 2.5*D* (see Fig. 4-4, sketch (c)), the distance between the increaser and the venturi tube must be at least 7*D* (from Table 4-1). Furthermore, between the two-bend combination in perpendicular planes and the increaser, there must be at least $9.5 \times 0.67D$ [from para. 4-5.2(h)(1)], and the distance between the two-bend combination in perpendicular planes and the venturi tube must be at least 22*D* [from para. 4-5.2(h)(2)]. An additional length of 6.5*D* is required. This length can be upstream, downstream, or partly upstream and partly downstream of the increaser.

4-5.3 Flow Conditioners and Flow Straighteners

A flow conditioner can be used to reduce upstream straight lengths. See paras. 1-6.4.1 and 1-6.4.2 of this Standard for additional information.

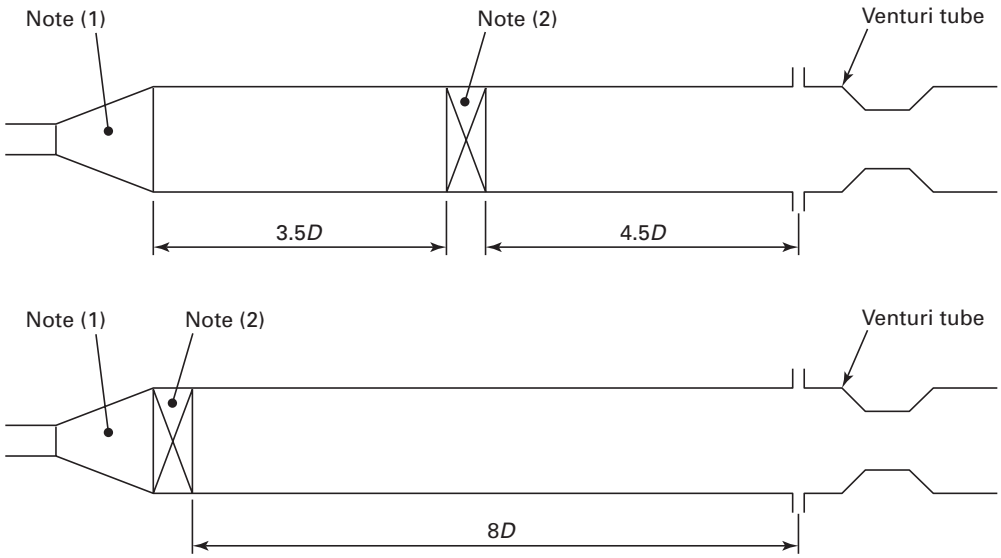

NOTES:
(1) Expander, 0.67*D* to *D* over a length of 2.5*D*.
(2) Full bore ball valve or gate valve fully open.

Fig. 4-3 Layout Including a Full Bore Valve for $\beta = 0.6$

Copyright ASME International
Provided by IHS under license with ASME
No reproduction or networking permitted without license from IHS
Not for Resale

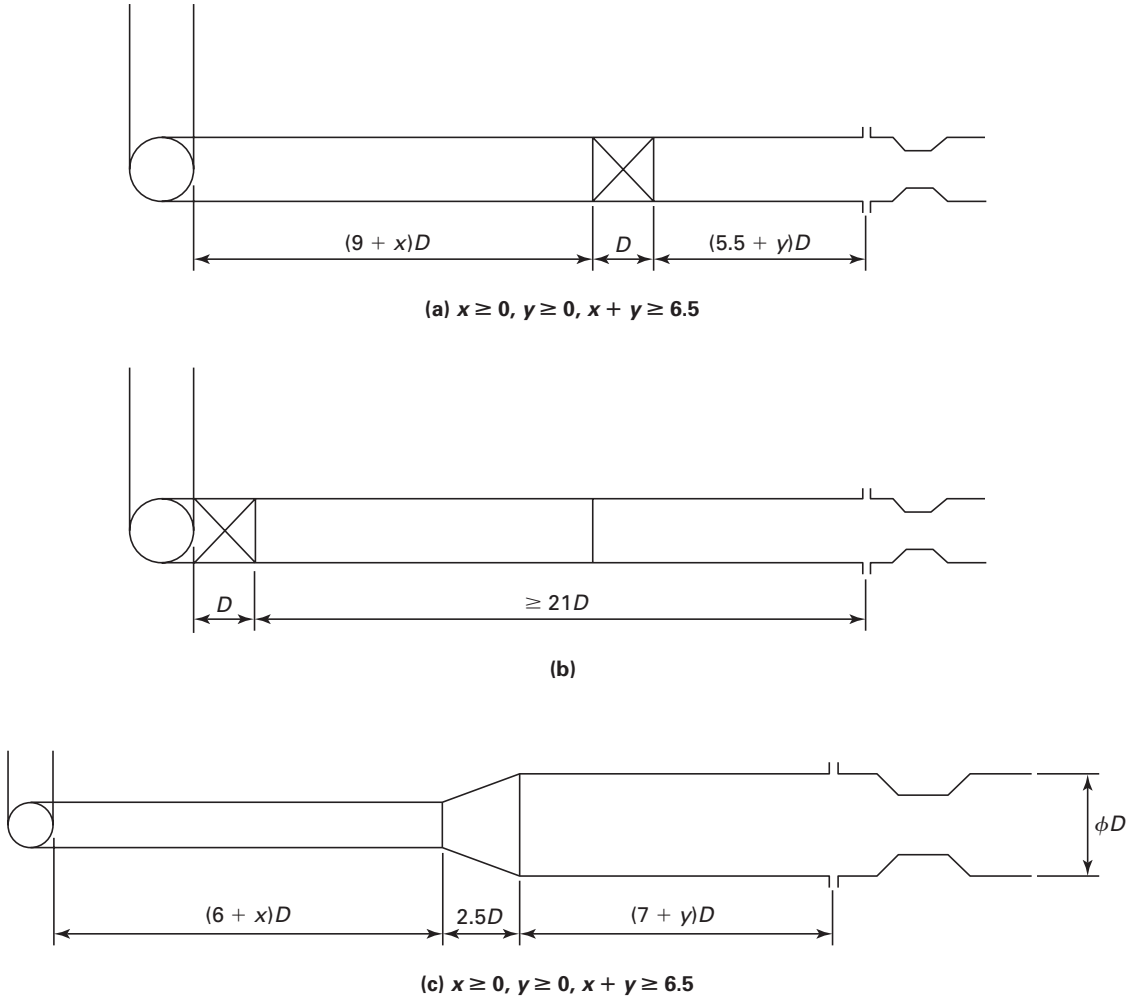

GENERAL NOTE: See para. 4-5.2.9.

Fig. 4-4 Examples of Acceptable Installations

4-5.4 Additional Installation Requirements for ASME Venturi Tubes

4-5.4.1 Circularity of Pipe Cross-Section

(a) Over an upstream length of at least 2*D* measured from the upstream end of the entrance cylinder of the venturi tube, the pipe shall be cylindrical. This pipe is said to be cylindrical when no diameter in any plane differs by more than 2% from the mean measured diameter of the pipe.

(b) The mean diameter of the pipe where it joins the ASME venturi tube shall be within 1% of the ASME venturi tube entrance cylinder diameter *D*, as defined in para. 4-4.2.1.

(c) The diameter of the pipe immediately downstream of the venturi tube shall not less be than 90% of the diameter at the end of the venturi tube divergent section. This means that, in most cases, pipes having the same nominal bore as that of the venturi tube can be used.

4-5.4.2 Roughness of the Upstream Pipe. The upstream pipe shall have a relative roughness of $R_a/D \leq 3.2\ (10^{-4})$ on a length at least equal to 2*D* measured upstream from the upstream pressure tap.

4-5.4.3 Alignment of the ASME Venturi Tube. The offset or distance between the centerlines of the upstream pipe and of the venturi tube, as measured in the connecting plane of the upstream pipe and entrance section A (see para. 4-4.2), shall be less than 0.005*D*. The angular alignment of the venturi tube centerline with respect to the upstream pipe centerline shall be better than 1 deg. The sum of the offset and half the diameter deviation [see para. 4-5.4.1(b)] shall be less than 7.5 $(10^{-3})D$. Mating flanges, therefore, would require the bores to be matched and the flanges aligned on installation. Dowels or self-centering gaskets could be used.

Copyright ASME International
Provided by IHS under license with ASME
No reproduction or networking permitted without license from IHS
Not for Resale

Copyright ASME International
Provided by IHS under license with ASME
No reproduction or networking permitted without license from IHS
Not for Resale

NONMANDATORY APPENDIX 4A
TABLE OF EXPANSIBILITY FACTORS

Table 4A-1 Venturi Tubes: Expansibility Factor, ε (Y)

Diameter Ratio		Expansibility Factor, ε (Y), for p_2/p_1 Equal to								
β	β^4	1.00	0.98	0.96	0.94	0.92	0.90	0.85	0.80	0.75
					for $\kappa = 1.2$					
0.0000	0.0000	1.0000	0.9874	0.9748	0.9620	0.9491	0.9361	0.9029	0.8689	0.8340
0.5623	0.1000	1.0000	0.9856	0.9712	0.9568	0.9423	0.9278	0.8913	0.8543	0.8169
0.6687	0.2000	1.0000	0.9834	0.9669	0.9504	0.9341	0.9178	0.8773	0.8371	0.7970
0.7401	0.3000	1.0000	0.9805	0.9613	0.9424	0.9238	0.9053	0.8602	0.8163	0.7733
0.7953	0.4000	1.0000	0.9767	0.9541	0.9320	0.9105	0.8895	0.8390	0.7909	0.7448
0.8000	0.4096	1.0000	0.9763	0.9533	0.9309	0.9091	0.8878	0.8367	0.7882	0.7418
					for $\kappa = 1.3$					
0.0000	0.0000	1.0000	0.9884	0.9767	0.9649	0.9529	0.9408	0.9100	0.8783	0.8457
0.5623	0.1000	1.0000	0.9867	0.9734	0.9600	0.9466	0.9331	0.8990	0.8645	0.8294
0.6687	0.2000	1.0000	0.9846	0.9693	0.9541	0.9389	0.9237	0.8859	0.8481	0.8102
0.7401	0.3000	1.0000	0.9820	0.9642	0.9466	0.9292	0.9120	0.8697	0.8283	0.7875
0.7953	0.4000	1.0000	0.9785	0.9575	0.9369	0.9168	0.8971	0.8495	0.8039	0.7599
0.8000	0.4096	1.0000	0.9781	0.9567	0.9358	0.9154	0.8955	0.8473	0.8013	0.7570
					for $\kappa = 1.4$					
0.0000	0.0000	1.0000	0.9892	0.9783	0.9673	0.9562	0.9449	0.9162	0.8865	0.8558
0.5623	0.1000	1.0000	0.9877	0.9753	0.9628	0.9503	0.9377	0.9058	0.8733	0.8402
0.6687	0.2000	1.0000	0.9857	0.9715	0.9573	0.9430	0.9288	0.8933	0.8577	0.8219
0.7401	0.3000	1.0000	0.9832	0.9667	0.9503	0.9340	0.9178	0.8780	0.8388	0.8000
0.7953	0.4000	1.0000	0.9800	0.9604	0.9411	0.9223	0.9038	0.8588	0.8154	0.7733
0.8000	0.4096	1.0000	0.9796	0.9597	0.9401	0.9210	0.9022	0.8567	0.8129	0.7705
					for $\kappa = 1.66$					
0.0000	0.0000	1.0000	0.9909	0.9817	0.9724	0.9629	0.9533	0.9288	0.9033	0.8768
0.5623	0.1000	1.0000	0.9896	0.9791	0.9685	0.9578	0.9471	0.9197	0.8917	0.8629
0.6687	0.2000	1.0000	0.9879	0.9759	0.9637	0.9516	0.9394	0.9088	0.8778	0.8464
0.7401	0.3000	1.0000	0.9858	0.9718	0.9577	0.9438	0.9299	0.8953	0.8609	0.8265
0.7953	0.4000	1.0000	0.9831	0.9664	0.9499	0.9336	0.9176	0.8782	0.8397	0.8020
0.8000	0.4096	1.0000	0.9827	0.9658	0.9490	0.9325	0.9162	0.8763	0.8374	0.7994

GENERAL NOTE: The values given are not intended for precise interpolation. Extrapolation is not permitted.

--`,,```,,,,````-`-`,,`,,`,`,,`---

Copyright ASME International
Provided by IHS under license with ASME
No reproduction or networking permitted without license from IHS

Not for Resale

NONMANDATORY APPENDIX 4B
ASME VENTURI METERS USED OUTSIDE THE SCOPE OF MFC-3M–2004

4B-1 GENERAL

As indicated in para. 4-4.5.1 the effects of D, β, and R_a/D on C are not yet sufficiently known to allow standardization outside the limits specified in this Standard.

The scope of this Appendix is to summarize the available data in order to allow an assessment of the rate of flow. The data addresses the values and/or the direction of variation of discharge coefficients and the uncertainties are given in terms of the various parameters (β, R_D, and R_a/D). These various effects are dealt with separately, although some results show that they are not independent.

In particular, the number of tests available on this subject is small, and these tests were mostly carried out on venturi tubes whose geometry was not strictly in accordance with this Standard. As a result, the reliability of the discharge coefficients and their attendant uncertainties is relatively low.

4B-2 EFFECTS OF THE DIAMETER RATIO

From an examination of the results available for venturi tubes with diameter ratios of approximately 0.75 and over, it has been noted that the scatter of measured discharge coefficients is wider than for smaller diameter ratios. An increase in the uncertainty on the discharge coefficient, therefore, should be assumed.

In order to allow an assessment of the uncertainty on the flow rate, it is recommended to double the uncertainty on C when β is greater than the maximum permissible value.

4B-3 INFLUENCE OF PIPE REYNOLDS NUMBER, R_D

4B-3.1 General

The influence of the Reynolds number R_D varies according to the type of ASME venturi tube. It is shown by a variation in the discharge coefficient and by an increase in the uncertainty.

4B-3.2 ASME Venturi Tube With an "As-Cast" Convergent Section

The influence of the Reynolds number is described as follows:

(a) When R_D decreases below 2 (10^5), the discharge coefficient C decreases and the uncertainty increases.

(b) When R_D increases above 2 (10^6), the discharge coefficient does not appear to change with Reynolds number, nor does the uncertainty.

For an estimation of the flow rate, the values of the discharge coefficient, C, and the attendant uncertainty, are given Table 4B-1.

4B-3.3 ASME Venturi Tube With a Machined Convergent Section

The influence of the Reynolds number is as described as follows:

(a) When R_D decreases below 2 (10^5), it is often found that there is a small increase in the discharge coefficient C before there is a steady decrease with decreasing R_D. The uncertainty on C increases slowly at first and then rapidly.

(b) When R_D increases above 1 (10^6), the value of C in the function of Reynolds number is not very predictable. Sometimes there is a slight increase in C with increasing R_D; sometimes there is a substantial but gradual increase in C; and sometimes there is a substantial and sudden increase in C with increasing R_D.

It is believed that there is sufficient evidence available to justify the statement that the discharge coefficient of this type of venturi tube is a function of R_d (throat Reynolds number) and not a function of R_D (pipe Reynolds number). The available data show that better correlation is achieved in terms of R_d than in terms of R_D.

For an estimation of the flow rate, the values of the discharge coefficient, C, and the attendant uncertainty, are given Table 4B-2.

Table 4B-1 Values and Uncertainties of the Discharge Coefficient in the Function of R_D

Pipe Reynolds Number, R_D	Discharge Coefficient, C	Uncertainty, %
4.0 (10^4)	0.957	± 2.5
6.0 (10^4)	0.966	± 2.0
1.0 (10^5)	0.976	± 1.5
1.5 (10^5)	0.982	± 1.0

Copyright ASME International
Provided by IHS under license with ASME
No reproduction or networking permitted without license from IHS
Not for Resale

Table 4B-2 Values and Uncertainties of Discharge Coefficient in the Function of R_d

Throat Reynolds Number, R_d	Discharge Coefficient, C	Uncertainty, % [Note (1)]
5.0 (10^4)	0.970	± 3.0
1.0 (10^5)	0.977	± 2.5
2.0 (10^5)	0.992	± 2.5
3.0 (10^5) [Note (2)]	0.998	± 1.5
5.0 (10^5) to 1.0 (10^6)	0.995	± 1.0
1.0 (10^6) to 2.0 (10^6)	1.000	± 2.0
2.0 (10^6) to 1.0 (10^8)	1.010	± 3.0

NOTES:
(1) For low R_d, the scatter of the data does not result in a normal (Gaussian) distribution.
(2) If $\beta \geq 0.67$, there is a difference between the values of discharge coefficient and uncertainty for $R_d = 3.0\ (10^5)$ recommended in this table and those in paras. 4-4.5.3 and 4-4.7.2.

4B-3.4 ASME Venturi Tube With a Rough-Welded Convergent Section

The influence of the pipe Reynolds number is as described as follows: When R_D decreases below 2 (10^5), the discharge coefficient decreases slightly while the uncertainty on C increases.

Although there is less information on this type of venturi tube, the values of the discharge coefficient and the uncertainty, given as guidance in Table 4B-3, can be used to estimate the rate of flow. The discharge coefficient does not appear to change when R_D is greater than 2 (10^6). Over $R_D = 2\ (10^6)$, it is advisable to take the uncertainty as equal to 2%.

Table 4B-3 Values and Uncertainties of the Discharge Coefficient in the Function of R_D

Pipe Reynolds Number, R_D	Discharge Coefficient, C	Uncertainty, %
4.0 (10^4)	0.96	± 3.0
6.0 (10^4)	0.97	± 2.5
1.0 (10^5)	0.98	± 2.5

Table 4B-4 Values and Uncertainties of Discharge Coefficient in the Function of R_D

Pipe Reynolds Number, R_D	Discharge Coefficient, C	Uncertainty, %
1.0 (10^4)	0.963	± 2.5
6.0 (10^4)	0.978	± 2.0
1.0 (10^5)	0.980	± 1.5
1.5 (10^5)	0.987	± 1.0
2.0 (10^5) to 5.0 (10^5)	0.992	± 1.0
5.0 (10^5) to 3.2 (10^6)	0.995	± 1.0

4B-3.5 ASME Venturi Tube With a Profile Defined as "As-Cast" Convergent Section, But With Machined Entrance and Convergent Sections

This venturi tube has the same geometric profile as defined in para. 4-4.2.7, with the exception that the entrance section, A, and the convergent section, B, are machined so that they have a relative roughness R_a less than both 5 (10^{-5})D and 15 μm (0.0006 in.). The pipe upstream of the meter entrance has the same roughness as the entrance cylinder over a length of at least $2D$ upstream of the entrance cylinder.

In order to allow an assessment of the flow rate, values of the discharge coefficient and the uncertainty, given as guidance in Table 4B-4, can be used.

4B-4 EFFECTS OF THE RELATIVE ROUGHNESS, R_a/D

4B-4.1 Roughness of the ASME Venturi Tube

An increase in the convergent section roughness lowers the value of the discharge coefficient, C. ASME venturi tubes with a machined convergent section seem to be more sensitive to this effect than ASME venturi tubes with an "as-cast" or rough-welded convergent section. The pressure loss of the venturi tube is also increased by an increase in the roughness.

4B-4.2 Roughness of the Upstream Pipe

An increase in the roughness of the upstream pipe produces an increase in the discharge coefficient C of the ASME venturi tube. It appears that this effect becomes all the more marked as β increases.

Copyright ASME International
Provided by IHS under license with ASME
No reproduction or networking permitted without license from IHS
Not for Resale

NONMANDATORY APPENDIX 4C
PRESSURE LOSS IN ASME VENTURI METERS[1]

4C-1 MEAN VALUE OF THE PRESSURE LOSS AND INFLUENCE OF THE RELATIVE ROUGHNESS

For a ASME venturi tube with a total angle of the divergent section equal to 7 deg and a pipe Reynolds number R_D greater than 1 (10^6), the relative pressure loss, $\xi = (\Delta p'' - \Delta p')/\Delta p$ [$\xi = (\Delta p'' - \Delta p')/h_w$], generally lies in the hatched area shown on Fig. 4C-1, sketch (a). The values of ξ close to the upper threshold of this area are for the upper values of the relative roughness R_a/D and, therefore, for a given manufacturing design, for the ASME venturi tubes whose diameters are smallest.

4C-2 INFLUENCE OF THE REYNOLDS NUMBER

For a given venturi tube, the value of ξ decreases when R_D increases, and it seems to reach a limiting value above approximately $R_D = 1$ (10^6). Figure 4C-1, sketch (b) gives an approximation of how the ratio of ξ to its limiting values varies.

4C-3 INFLUENCE OF THE ANGLE OF THE DIVERGENT SECTION

The relative pressure loss increases with the angle of the divergent section. Figure 4C-1, sketch (c) shows (everything else being equal) the ratio of the values of ξ for two venturi tubes having angles of the divergent section ϕ equal to 15 deg and 7 deg.

4C-4 INFLUENCE OF THE TRUNCATION

No precise indication is at present available on the pressure loss of a truncated venturi tube. It is considered, however, that the length of the divergent section can be reduced by about 35% with relatively small increase in the pressure loss.

[1] All values mentioned in this Appendix are given for guidance only (see para. 4-4.9.2).

Copyright ASME International
Provided by IHS under license with ASME
No reproduction or networking permitted without license from IHS
Not for Resale

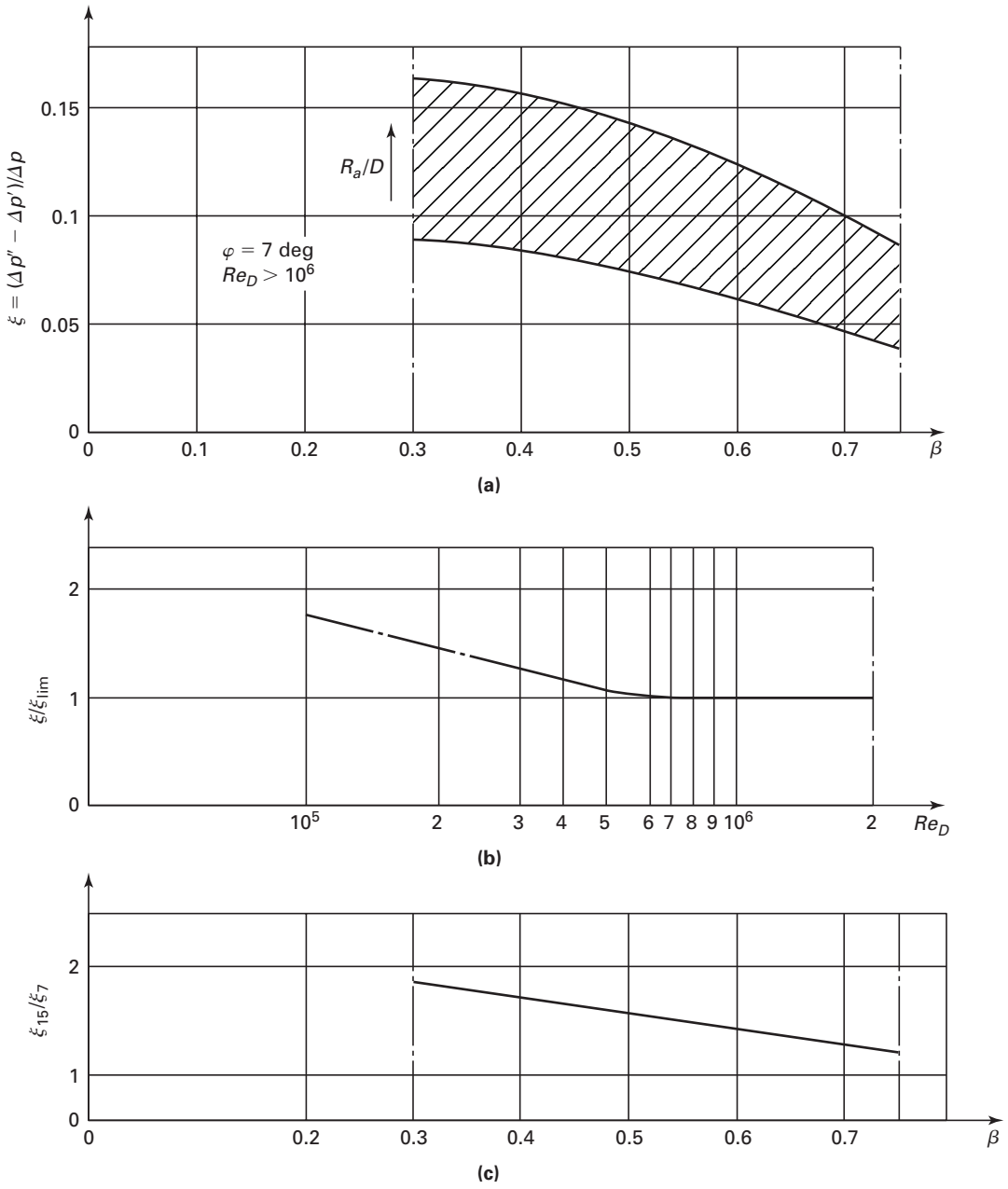

Fig. 4C-1 Values of the Pressure Loss Across an ASME Venturi Tube

--`,,```,,,,````-`-`,,`,,`,`,,`---

Copyright ASME International
Provided by IHS under license with ASME
No reproduction or networking permitted without license from IHS
Not for Resale

Copyright ASME International
Provided by IHS under license with ASME
No reproduction or networking permitted without license from IHS
Not for Resale

ASME MFC-3M–2004

ISBN 0-7918-2928-6





--`,,```,,,,````-`-`,,`,,`,`,,`---

Copyright ASME International
Provided by IHS under license with ASME
No reproduction or networking permitted without license from IHS

Not for Resale