ASME MFC-2M 83 ■ 0759670 0049291 3 ■

E-90-10

AN AMERICAN NATIONAL STANDARD

Measurement Uncertainty for Fluid Flow in Closed Conduits

ANSI/ASME MFC-2M-1983

SPONSORED AND PUBLISHED BY

THE AMERICAN SOCIETY OF MECHANICAL ENGINEERS

United Engineering Center 345 East 47th Street New York, N. Y. 10017

Copyright ASME International
Provided by IHS under license with ASME
No reproduction or networking permitted without license from IHS

Not for Resale

Date of Issuance: August 31, 1984

This Standard will be revised when the Society approves the issuance of a new edition. There will be no addenda or written interpretations of the requirements of this Standard issued to this Edition.

This code or standard was developed under procedures accredited as meeting the criteria for American National Standards. The Consensus Committee that approved the code or standard was balanced to assure that individuals from competent and concerned interests have had an opportunity to participate. The proposed code or standard was made available for public review and comment which provides an opportunity for additional public input from industry, academia, regulatory agencies, and the public-at-large.

ASME does not "approve," "rate," or "endorse" any item, construction, proprietary device, or activity.

ASME does not take any position with respect to the validity of any patent rights asserted in connection with any items mentioned in this document, and does not undertake to insure anyone utilizing a standard against liability for infringement of any applicable Letters Patent, nor assume any such liability. Users of a code or standard are expressly advised that determination of the validity of any such patent rights, and the risk of infringement of such rights, is entirely their own responsibility.

Participation by federal agency representative(s) or person(s) affiliated with industry is not to be interpreted as government or industry endorsement of this code or standard.

ASME does not accept any responsibility for interpretations of this document made by individual volunteers.

No part of this document may be reproduced in any form,
in an electronic retrieval system or otherwise,
without the prior written permission of the publisher.

Copyright © 1984 by
THE AMERICAN SOCIETY OF MECHANICAL ENGINEERS
All Rights Reserved
Printed in U.S.A.

Copyright ASME International
Provided by IHS under license with ASME
No reproduction or networking permitted without license from IHS

Not for Resale

FOREWORD

(This Foreword is not part of American National Standard, Measurement Uncertainty for Fluid Flow in Closed Conduits, ANSI/ASME MFC-2M-1983.)

This Standard was prepared by Subcommittee 1 of the American Society of Mechanical Engineers Standards Committee on Measurement of Fluid Flow in Closed Conduits.

The methodology is consistent with that described in:

Joint Army, Navy, NASA, Air Force Propulsion Committee (JANNAF). ICRPG Handbook for Estimating the Uncertainty in Measurements Made with Liquid Propellant Rocket Engine Systems. CPIA Publication 180. AD 851127. Available from NTIS, 5285 Port Royal Road, Springfield, VA 22161.

U.S. Dept. of the Air Force. Arnold Engineering Development Center. Handbook: Uncertainty in Gas Turbine Measurements. USAF AEDC-TR-73-5. AD 755356. Available from NTIS, 5285 Port Royal Road, Springfield, VA 22161.

The Committee is indebted to the many engineers and statisticians who contributed to this work. Most noteworthy are J. Rosenblatt and H. Ku of the National Bureau of Standards for their helpful discussions and comments. The measurement uncertainty model is based on recommendations by the National Bureau of Standards. D. R. Keyser suggested the alternate model and other changes. B. Ringhiser programmed the Monte Carlo simulations for uncertainty intervals and outliers. Encouragement and constructive criticism were provided by:

G. Adams, *Chairman*, The Society of Automotive Engineers, Committee E33C, USAF, WPAFB, ASD
R. P. Benedict, *Chairman*, The American Society of Mechanical Engineers, Committee PTC19.1, Westinghouse
J. W. Thompson, Jr., ARO, Inc.
R. H. Dieck, Pratt & Whitney Aircraft
J. Ascough, National Gas Turbine Establishment, Great Britain
C. P. Kittredge, Consulting Engineer
R. W. Miller, Foxboro Co.

This Standard was approved by the ASME Standards Committee on Measurement of Fluid Flow in Closed Conduits and subsequently adopted as an American National Standard on March 17, 1983.

Copyright ASME International
Provided by IHS under license with ASME
No reproduction or networking permitted without license from IHS
Not for Resale

ASME STANDARDS COMMITTEE
Measurement of Fluid Flow in Closed Conduits

(The following is the roster of the Committee at the time of approval of this Standard.)

OFFICERS

R. W. Miller, *Chairman*
D. E. Zientara, *Vice Chairman*
W. R. Daisak, *Secretary*

COMMITTEE PERSONNEL

J. W. Adam, Dresser Industries, Inc., Houston, Texas
H. P. Bean, El Paso Natural Gas Company, El Paso, Texas
S. R. Beitler, The Ohio State University, Columbus, Ohio
P. Bliss, Pratt & Whitney Aircraft, E. Hartford, Connecticut
M. Bradner, The Foxboro Company, Foxboro, Massachusetts
T. Breunich, Peerless Nuclear Corporation, Stamford, Connecticut
E. E. Buxton, St. Albans, West Virginia
J. Castorina, U.S. Navy, Philadelphia, Pennsylvania
E. S. Cole, The Pitometer Associates, New York, New York
R. B. Crawford, Oak Harbor, Washington
C. F. Cusick, Philadelphia, Pennsylvania
L. A. Dodge, Richmond Heights, Ohio
R. B. Dowdell, University of Rhode Island, Kingston, Rhode Island
R. L. Galley, Antioch, California
D. J. Grant, Goddard Space Flight Center, NASA, Greenbelt, Maryland
D. Halmi, D. Halmi and Associates, Inc., Pawtucket, Rhode Island
R. N. Hickox, Olathe, Kansas
H. S. Hillbrath, The Boeing Company, Sunnyvale, California
L. K. Irwin, Camden, California
L. J. Kemp, Southern California Gas Company, Los Angeles, California
C. P. Kittredge, Princeton, New Jersey
W. F. Z. Lee, Rockwell International, Pittsburgh, Pennsylvania
E. D. Mannherz, Fisher & Porter Company, Warminster, Pennsylvania
R. W. Miller, The Foxboro Company, Foxboro, Massachusetts
R. V. Moorse, Union Carbide Corporation, Tonawanda, New York
L. C. Neale, Jefferson, Massachusetts
P. H. Nelson, Bureau of Reclamation, Denver, Colorado
M. November, ITT-Barton, City of Industry, California
R. M. Reimer, General Electric Company, Cincinnati, Ohio
H. E. Snider, AWWA Standards, Kansas City, Missouri
D. A. Sullivan, Fern Engineering, Bourne, Massachusetts
R. G. Teyssandier, Daniel Industries, Inc., Houston, Texas
C. R. Varner, Vernon, Connecticut
J. S. Yard, Fischer & Porter Company, Warminster, Pennsylvania
D. E. Zientara, Sybron Corporation, Rochester, New York

Copyright ASME International
Provided by IHS under license with ASME
No reproduction or networking permitted without license from IHS
Not for Resale

SUBCOMMITTEE 1

R. B. Abernethy, Pratt & Whitney Aircraft Group, West Palm Beach, Florida
J. W. Adam, Dresser Industries, Inc., Houston, Texas
R. B. Dowdell, University of Rhode Island, Kingston, Rhode Island
D. Halmi, D. Halmi and Associates, Inc., Pawtucket, Rhode Island
D. M. Keyser, U.S. Navy, Warminster, Pennsylvania
W. F. Z. Lee, Rockwell International, Pittsburgh, Pennsylvania
B. D. Powell, Pratt & Whitney Aircraft Group, West Palm Beach, Florida

Copyright ASME International
Provided by IHS under license with ASME
No reproduction or networking permitted without license from IHS
Not for Resale

CONTENTS

Foreword iii
Standards Committee Roster v

Section 1 — Introduction 1
1.1 Objective 1
1.2 Scope 1
1.3 Nomenclature 1
1.4 Measurement Error 3
1.5 Measurement Error Sources 9
1.6 Dependency of Error Classes on the Defined Measurement Process 11
1.7 Measurement Uncertainty Interval — Combining Bias and Precision 15
1.8 Propagation of Measurement Errors 18
1.9 Measurement Uncertainty Analysis Report 21
1.10 Pretest vs Post-test Measurement Uncertainty Analysis 22
1.11 Measurement Uncertainty Analysis Procedure 22
1.12 List of References on Statistical Quality Control Charts 24

Section 2 — Examples 25
2.1 Introduction 25
2.2 General 25
2.3 Example One — Test Facility 26
2.4 Example Two — Back-to-Back Comparative Test 45
2.5 Example Three — Liquid Flow 47

Figures
1 Measurement Error 4
2 Precision Error 5
3 Bias Error 7
4 Measurement Error (Bias, Precision, and Accuracy) 8
5 Basic Measurement Calibration Hierarchy 10
6 Data Acquisition System 10
7 Trending Error Calibration History — Treat as Precision 12
8 Measurement Uncertainty; Symmetrical Bias 16
9 Measurement Uncertainty; Nonsymmetrical Bias 17
10 Run-to-Run Difference 18
11 Flow Through a Choked Venturi 20
12 Schematic of Critical Venturi Flowmeter Installation Upstream of a Turbine Engine 27
13 Typical Calibration Hierarchy 27
14 Calibration Process Uncertainty Parameter $U_1 = \pm(B_1 + t_{95}S)$ 29
15 Temperature Measurement Calibration Hierarchy 34
16 Typical Thermocouple Channel 36
17 Graph of β vs B 49

Copyright ASME International
Provided by IHS under license with ASME
No reproduction or networking permitted without license from IHS
Not for Resale

A1 Bias in a Random Process 52
A2 Correlation Coefficients 52
C1 Outliers Outside the Range of Acceptable Data 64
C2 a, β Error in Thompson's Outlier Test (Based on 1 Outlier in Each of 100 Samples of Sizes 5, 10, and 40) 67
C3 a, β Error in Grubbs' Outlier Test (Based on 1 Outlier in Each of 100 Samples of Sizes 5, 10, and 40) 68
C4 Results of Outlier Tests 69

Tables

1 Values Associated With the Distribution of the Average Range 6
2 Nonsymmetrical Bias Limits 8
3 Calibration Hierarchy Error Sources 10
4 Data Acquisition Error Sources 11
5 Data Reduction Error Sources 11
6 Uncertainty Intervals Defined by Nonsymmetrical Bias Limits 17
7 Flow Data 21
8 Elemental Error Sources 23
9 Calibration Hierarchy Error Sources 27
10 Pressure Transducer Data Acquisition Error Sources 29
11 Pressure Measurement Data Reduction Error Sources 31
12 Temperature Calibration Hierarchy Elemental Errors 34
13 Airflow Measurement Error Sources 42
14 Error Comparisons of Examples One and Two 47
15 Values of β and B 49
16 Results for d = 14 in. and B = 0.667 50
B1 Results of Monte Carlo Simulation for Theoretical Input $(\sigma_x{}^2, \mu_x, \sigma_y{}^2, \mu_y)$ 61
B2 Results of Monte Carlo Simulation for Theoretical Input $\mu_{xi}, \sigma_{xi}{}^2$ 61
B3 Error Propagation Formulas 62
C1 Rejection Values for Thompson's Tau 65
C2 Rejection Values for Grubbs' Method 66
C3 Sample Values 68
C4 Results of Applying Thompson's τ and Grubbs' Method 68
D1 Two-Tailed Student's t Table 71

Appendices

A Glossary 51
B Propagation of Errors by Taylor Series 57
C Outlier Detection 63
D Student's t Table 71

Copyright ASME International
Provided by IHS under license with ASME
No reproduction or networking permitted without license from IHS
Not for Resale

AN AMERICAN NATIONAL STANDARD

MEASUREMENT UNCERTAINTY FOR FLUID FLOW IN CLOSED CONDUITS

Section 1 — Introduction

1.1 OBJECTIVE

The objective of this Standard is to present a method of treating measurement error or uncertainty for the measurement of fluid flow. The need for a common method is obvious to those who have reviewed the numerous methods currently used. The subject is complex and involves both engineering and statistics. A common standard method is required to produce a well-defined, consistent estimate of the magnitude of uncertainty and to make comparisons between experiments and between facilities. However, it must be recognized that no single method will give a rigorous, scientifically correct answer for all situations. Further, even for a single set of data, the task of finding and proving one method to be correct is almost impossible.

1.2 SCOPE

1.2.1 General

This Standard presents a working outline detailing and illustrating the techniques for estimating measurement uncertainty for fluid flow in closed conduits. The statistical techniques and analytical concepts applied herein are applicable in most measurement processes. Section 2 provides examples of the mathematical model applied to the measurement of fluid flow. Each example includes a discussion of the elemental errors and examples of the statistical techniques.

An effort has been made to use simple prose with a minimum of jargon. The notation and definitions are given in Appendix A and are consistent with ISO 3534, Statistics – Vocabulary and Symbols (1977).

1.2.2 The Problem

All measurements have errors. The errors may be positive or negative and may be of a variable magnitude. Many errors vary with time. Some have very short periods and some vary daily, weekly, seasonally, or yearly. Those which can be observed to vary during the test are called random errors. Those which remain constant or apparently constant during the test are called biases, or systematic errors. The actual errors are rarely known; however, uncertainty intervals can be estimated or inferred as upper bounds on the errors. The problem is to construct an uncertainty interval which models these errors.

1.3 NOMENCLATURE

1.3.1 Statistical Nomenclature

β' = true bias error, i.e., the fixed, systematic, or constant component of the total error δ. [The prime ($'$) is added to avoid confusion with engineering notation.]

δ = total error, i.e., the difference between the observed measurement and the true value

Copyright ASME International
Provided by IHS under license with ASME
No reproduction or networking permitted without license from IHS
Not for Resale

ϵ = the random component of error, sometimes called *repeatability error* or *sampling error* (Note: $\delta = \beta' + \epsilon$)

μ = the true, unknown average

ν = degrees of freedom (see Appendix A)

σ = the true standard deviation of repeated values of the measurement; also, the standard deviation of the error δ. This variation is due to the random error ϵ.

σ^2 = the true variance, i.e., the square of the standard deviation

B = the estimate of the upper limit of the bias error β'

B_{ij} = an estimate of the upper limit of an elemental bias error. The j subscript indicates the process, i.e.:

j = (*1*) calibration
= (*2*) data acquisition
= (*3*) data reduction

The i subscript is the number of the error source within the process. If i is more than a single digit, a comma is used between i and j.

$$B = \sqrt{\sum_i \sum_j B_{ij}^2}$$

N = the number of samples or the sample size

S = an estimate of the standard deviation σ obtained by taking the square root of S^2. It is the precision index.

S_{ij} = the estimate of the precision index from one elemental source. The subscripts are the same as defined under B_{ij} above.

$$S = \sqrt{\sum_i \sum_j S_{ij}^2}$$

S^2 = an unbiased estimate of the variance σ^2

$$= \frac{\sum_{i=1}^{N} (X_i - \bar{X})^2}{N - 1}$$

t_{95} = Student's t = statistical parameter at the 95% confidence level. The degrees of freedom ν of the sample estimate of the standard deviation is needed to obtain the t value from Table D1.

U = an estimate of the error band, centered about the measurement, within which the true value will fall; an upper limit of δ. The interval defined as the measurement plus and minus U should include the true value with high probability.

X_i = an individual measurement

$\bar{X}$ = sample average of measurements

$$= \frac{\sum_{i=1}^{N} X_i}{N}$$

1.3.2 Engineering Nomenclature

The following symbols are used in describing the primary elements and in the equations given for computing rates of flow. Letters used to represent special factors in some equations are defined at the place of use, as are special subscripts.

Copyright ASME International
Provided by IHS under license with ASME
No reproduction or networking permitted without license from IHS
Not for Resale

β (beta) = ratio of diameters = d/D, ratio
Γ (gamma) = isentropic exponent of a real gas, a function of p_1, p_2, and T, number
γ (gamma) = ratio of specific heats of a gas (ideal) = c_p/c_v, ratio
Δp (delta p) = differential pressure = $p_1 - p_2$, psi or pascals (Pa)
ρ (rho) = density, lb_m/ft^3 or kg/m^3
ϕ^* (phi) = sonic-flow function of a real gas, number
ϕ_i^* (phi) = sonic-flow function of an ideal gas, number
a = area of an orifice, flow nozzle, or venturi throat, $in.^2$ or m^2
C = coefficient of discharge, ratio
c_p = specific heat of a fluid at constant pressure, $Btu/lb_m \cdot {}^\circ R$ or $J/kg \cdot K$
c_v = specific heat of a fluid at constant volume, $Btu/lb_m \cdot {}^\circ R$ or $J/kg \cdot K$
D = diameter of pipe or meter tube, in. or m
d = diameter of orifice, flow nozzle throat, or venturi throat in. or m
E = velocity of approach factor = $1/\sqrt{1 - \beta^4}$, number
F = isentropic expansion function of a real gas, ratio
F_a = area thermal expansion factor, ratio
F_i = isentropic expansion function of an ideal gas $\left(\frac{\gamma - 1}{\gamma}\right)$, ratio
g = acceleration due to gravity, local, ft/sec^2 (not required in SI units)
g_c = proportionally constant in the force-mass-acceleration equation = 32.174, number (not required in SI units)
h = effective differential pressure, ft of fluid (SI units not applicable)
h_w = effective differential pressure, in. of water at 68°F (SI units not applicable)
MW = molecular weight of a fluid, number
m = mass rate of flow, lb_m/sec or kg/s
p = pressure, absolute, psia (English units)
Pa = pressure, pascal (N/m^2; SI units)
p_t = total or stagnation pressure, psia or Pa
R = gas constant in $pv = RT$ (here p is lb_f/ft^2), ft × lb_f/lb_m × °R or J/(mol · K)
R_D = Reynolds number based on D, ratio
R_d = Reynolds number based on d, ratio
T = absolute temperature, °R or K
V = velocity, ft/sec or m/s
V_s = velocity of sound (acoustic velocity), ft/sec or m/s
v = specific volume = $1/\rho$, ft^3/lb or m^3/kg
Y = expansion factor for a gas, ratio
Z = compressibility factor for a real gas, ratio

1.4 MEASUREMENT ERROR

1.4.1 General

All measurements have errors. These errors are the differences between the measurements and the true value, as shown in Fig. 1. In some cases, the true value may be arbitrarily defined as the value that would be obtained by the National Bureau of Standards (NBS). Uncertainty is an estimate of the test error which in most cases would not be exceeded. Measurement error δ has two components: a fixed error β' and a random error ϵ.

1.4.2 Precision (Random Error)

Random error is seen in repeated measurements of the same thing. Measurements do not and are not expected to agree exactly. There are numerous small effects which cause disagreements. The precision of a measurement process is determined by the variation between repeated measurements. The standard devia-

Copyright ASME International
Provided by IHS under license with ASME
No reproduction or networking permitted without license from IHS
Not for Resale

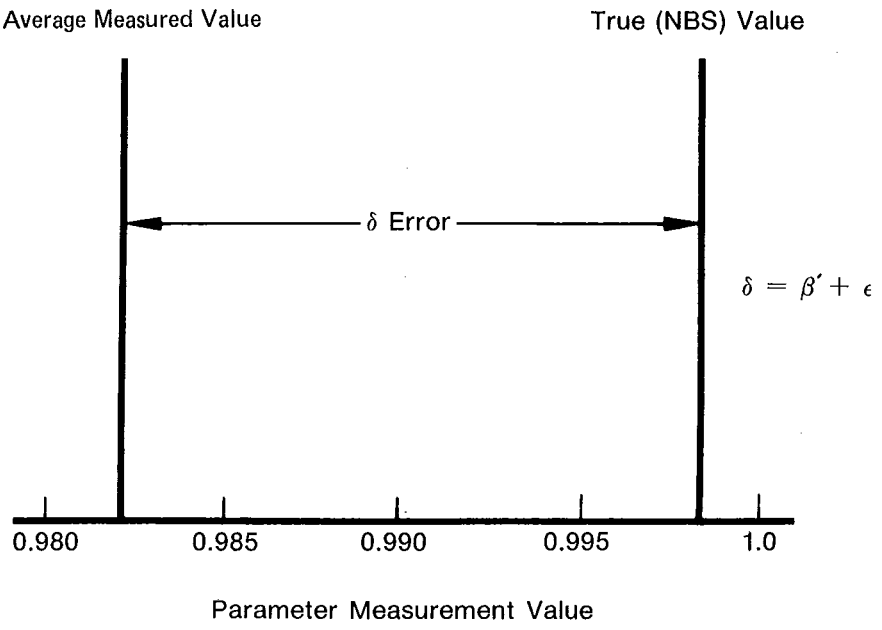

FIG. 1 MEASUREMENT ERROR

tion σ in Fig. 2 is used as a measure of the precision error ϵ. A large standard deviation means large scatter in the measurements. The statistic S is calculated to estimate the standard deviation σ and is called the precision index

$$S = \sqrt{\frac{\sum_{i=1}^{N} (X_i - \bar{X})^2}{N-1}}$$

$$= \sqrt{\frac{\sum_{i=1}^{N} X_i^2 - \frac{\left(\sum_{i=1}^{N} X_i\right)^2}{N}}{N-1}} \qquad (1)$$

where N is the number of measurements made and $\bar{X}$ is the average value of individual measurements X_i.

The effect of the precision error of the measurement can often be reduced by taking several repeated or simultaneous observations and averaging. Averages will have a smaller precision index.

$$\sigma_{\text{average}} = \frac{\sigma_{\text{individuals}}}{\sqrt{N}} \qquad \text{and} \qquad S_{\bar{X}} \cong \frac{S}{\sqrt{N}}$$

Throughout this document, the precision index is the sample standard deviation of the measurement, whether it is a single reading or the average of several readings.

There are many ways to calculate the precision index.

Copyright ASME International
Provided by IHS under license with ASME
No reproduction or networking permitted without license from IHS
Not for Resale

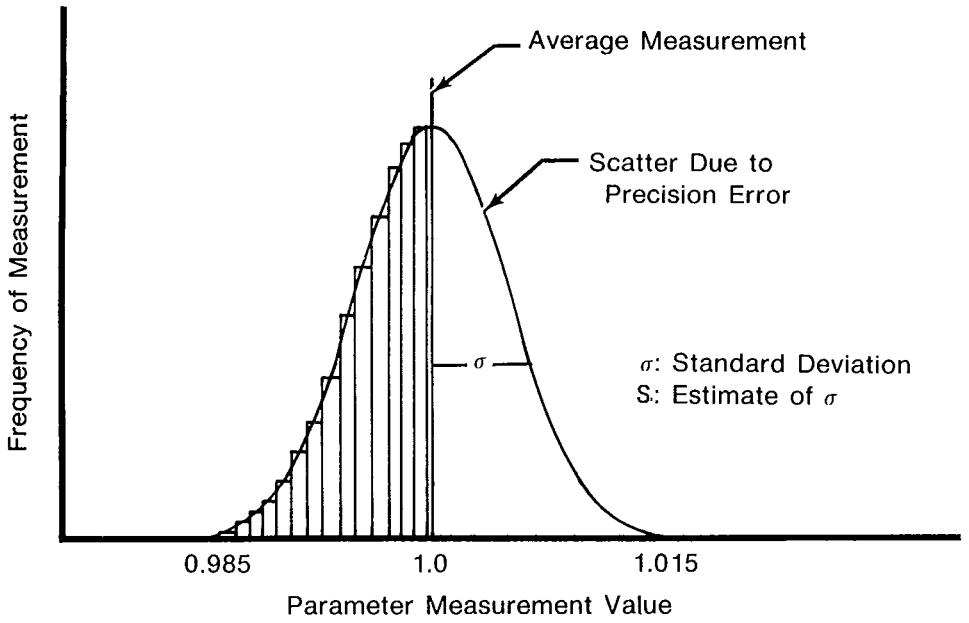

FIG. 2 PRECISION ERROR

(*a*) If the variable to be measured can be held constant, a number of repeated measurements can be used to evaluate Eq. (1).

(*b*) If there are k redundant instruments and the variable to be measured can be held constant to take i repeated readings on each of k instruments, then the following pooled estimate of the precision index should be used:

$$S = \sqrt{\frac{\sum_k \sum_i (X_{ik} - \bar{X}_k)^2}{(k \times i) - k}}$$

(*c*) If a pair of instruments are used to measure a variable that is not constant with time, the difference between the readings may be used to estimate the precision index of the individual instruments as follows:

let $\theta_i = X_{1i} - X_{2i}$

$$S = \frac{S_\theta}{\sqrt{2}} = \sqrt{\sum_i^1 \frac{(\theta_i - \bar{\theta})^2}{2(i-1)}}$$

(*d*) For sample sizes of 10 or less, the range (largest minus smallest) may be used to estimate the precision index. There is a loss of degrees of freedom with this technique, and the estimate of S is less precise than those above, but it is less complex when computers or calculators are not available to evaluate Eq. (1). The procedure is to estimate S by:

$$S = \frac{\bar{R}}{d_2^*}$$

Copyright ASME International
Provided by IHS under license with ASME
No reproduction or networking permitted without license from IHS
Not for Resale

TABLE 1 VALUES ASSOCIATED WITH THE DISTRIBUTION OF THE AVERAGE RANGE

Number of Samples	Number of Observations Per Sample																	
	2		3		4		5		6		7		8		9		10	
	ν	d_2^*	ν	d_2^*	ν	d_2^*	ν	d_2^*	ν	d_2^*	ν	d_2^*	ν	d_2^*	ν	d_2^*	ν	d_2^*
1	1.0	1.41	2.0	1.91	2.9	2.24	3.8	2.48	4.7	2.67	5.5	2.83	6.3	2.96	7.0	3.08	7.7	3.18
2	1.9	1.28	3.8	1.81	5.7	2.15	7.5	2.40	9.2	2.60	10.8	2.77	12.3	2.91	13.8	3.02	15.1	3.13
3	2.8	1.23	5.7	1.77	8.4	2.12	11.1	2.38	13.6	2.58	16.0	2.75	18.3	2.89	20.5	3.01	22.6	3.11
4	3.7	1.21	7.5	1.75	11.2	2.11	14.7	2.37	18.1	2.57	21.3	2.74	24.4	2.88	27.3	3.00	30.1	3.10
5	4.6	1.19	9.3	1.74	13.9	2.10	18.4	2.36	22.6	2.56	26.6	2.73	30.4	2.87	34.0	2.99	37.5	3.10
6	5.5	1.18	11.1	1.73	16.6	2.09	22.0	2.35	27.1	2.56	31.8	2.73	36.4	2.87	40.8	2.99	45.0	3.10
7	6.4	1.17	12.9	1.73	19.4	2.09	25.6	2.35	31.5	2.55	37.1	2.72	42.5	2.87	47.5	2.99	52.4	3.10
8	7.2	1.17	14.8	1.72	22.1	2.08	29.3	2.35	36.0	2.55	42.4	2.72	48.5	2.87	54.3	2.98	59.9	3.09
9	8.1	1.16	16.6	1.72	24.8	2.08	32.9	2.34	40.5	2.55	47.7	2.72	54.5	2.86	61.0	2.98	67.3	3.09
10	9.0	1.16	18.4	1.72	27.6	2.08	36.5	2.34	44.9	2.55	52.9	2.72	60.6	2.86	67.8	2.98	74.8	3.09
11	9.9	1.16	20.2	1.71	30.3	2.08	40.1	2.34	49.4	2.55	58.2	2.72	66.6	2.86	74.6	2.98	82.3	3.09
12	10.8	1.15	22.0	1.71	33.0	2.07	43.7	2.34	53.9	2.55	63.5	2.72	72.7	2.85	81.3	2.98	89.7	3.09
13	11.6	1.15	23.9	1.71	35.7	2.07	47.4	2.34	58.4	2.55	68.8	2.71	78.7	2.85	88.1	2.98	97.2	3.09
14	12.5	1.15	25.7	1.71	38.5	2.07	51.0	2.34	62.8	2.54	74.0	2.71	84.7	2.85	94.8	2.98	104.6	3.08
15	13.4	1.15	27.5	1.71	41.2	2.07	54.6	2.34	67.3	2.54	79.3	2.71	90.8	2.85	101.6	2.98	112.1	3.08
d_2		1.13		1.69		2.06		2.33		2.53		2.70		2.85		2.97		3.08
cd	0.88		1.82		2.74		3.62		4.47		5.27		6.03		6.76		7.45	

SOURCE:
Table 1 is reprinted with permission of author and publisher from Quality Control and Industrial Statistics, 4th ed., by Acheson J. Duncan (Homewood, Ill.: Richard D. Irwin, Inc., 1974), p. 950. © 1974 by Richard D. Irwin, Inc. It first appeared as a whole in the Journal of the American Statistical Association 53 (1958), p. 548.

GENERAL NOTES:
(a) $\nu(\bar{R}/d_2^*)^2$ is distributed approximately as x^2 with ν degrees of freedom; R is the average range of g subgroups, each of size m.
(b) In general, the degrees of freedom will be given approximately by the reciprocal of $[-2 + 2\sqrt{1 + 2(c\nu)^2/g}]$ where $c\nu$ is the coefficient of variation (d_3/d_2) of the range and g is the number of subgroups. Also, d_2^* is given approximately by d_2 (i.e., the infinity value of d_2^*) times $(1 + 1/4\nu)$. Values of ν are also very readily built up from the constant differences. Table 1 is a basic table that may be used whenever the average range is used in lieu of S.
(c) cd = constant difference.

Values of d_2^* and the degrees of freedom ν are taken from Table 1. $\bar{R}$ is the average range based on g samples of size m.

1.4.3 Bias (Fixed Error)

The second component of error, bias β' is the constant or systematic error for the duration of the test (Fig. 3). In repeated measurements, each measurement has the same bias. The bias cannot be determined unless the measurements are compared with the true value of the quantity measured.

Bias is categorized into five classes as follows: (1) known biases – calibrated out; (2) known biases – ignored; (3) unknown biases eliminated by control of the measurement process; and small unknown biases which may have an (4) unknown sign (±) or (5) known sign, and contribute to the uncertainty.

1.4.3.1 Known Biases – Calibrated Out. Known biases are eliminated by comparing the instrument with a standard instrument and obtaining a correction. This process is called *calibration*, which will diminish the bias and introduce a random uncertainty that will be discussed later.

1.4.3.2 Known Biases – Ignored. If known biases are considered to be negligible relative to the test objective, they may be ignored.

Copyright ASME International
Provided by IHS under license with ASME
No reproduction or networking permitted without license from IHS
Not for Resale

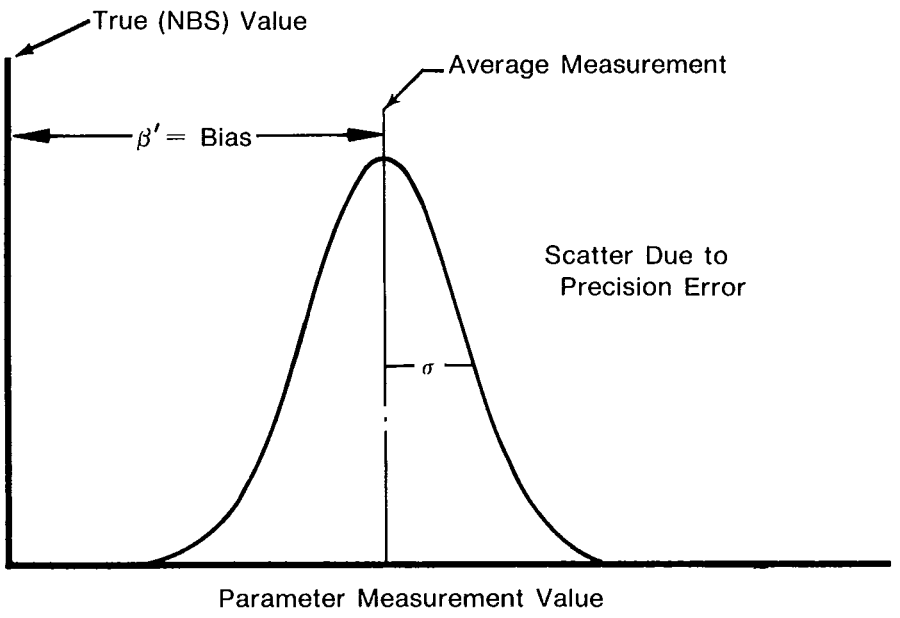

FIG. 3 BIAS ERROR

1.4.3.3 Unknown Biases – Eliminated by Control of the Measurement Process. Unknown biases are not correctable although they may exist. Every effort must be made to eliminate all significant biases in order to secure a properly controlled measurement process. To ensure control, all measurements should be monitored with statistical quality control charts. Drifts, trends, and movements leading to out-of-control situations should be identified and investigated. Histories of data from calibrations are required for effective control. It is assumed herein that these precautions are observed and that the measurement process is in control; if not, the methods described are invalid. It is acceptable to delete obvious mistakes from final uncertainty calculations. References to statistical quality control charts are given at the end of Section 1.

After all obvious mistakes have been corrected or removed, there may remain a few observations which are suspicious solely because of their magnitude. For errors of this nature, the statistical outlier tests given in Appendix C should be used. These tests assume the observations are normally distributed. It is necessary to recalculate the sample standard deviation of the distribution of observations whenever a datum is discarded as a result of the outlier test. Data should not be discarded lightly.

1.4.3.4 Remaining Biases of Unknown Sign and Unknown Magnitude – Contribute to Uncertainty. In most cases, the bias error, though a constant, is equally likely to be plus or minus about the measurement; that is, it is not known if the bias error is positive or negative, and the bias limit reflects this. The bias limit B is estimated as an upper limit on the fixed error β'.

It is both difficult and frustrating to estimate the limit of an unknown bias. To determine the exact bias in a measurement, it would be necessary to compare the true value and the measurements. This is almost always impossible. An effort must be made to obtain special tests or data that will provide bias information. The following examples are in order of preference:

(*a*) interlab, interfacility, independent tests on flow measurement devices, test rigs, and engines. (See proposed ISO Draft 5725, Precision of Test Methods – Determination of Repeatability and Reproducibility.) With these data it is possible to obtain measures of the bias errors between facilities.

(*b*) special comparisons of standards with instruments in the actual test environment;

(*c*) ancillary or concomitant functions that provide information on the same performance paramter, e.g., in a gas turbine test, airflow may be (1) measured with an orifice and/or a bellmouth, (2) estimated

Copyright ASME International
Provided by IHS under license with ASME
No reproduction or networking permitted without license from IHS
Not for Resale

TABLE 2 NONSYMMETRICAL BIAS LIMITS

Bias Limits	Explanation
0, +10 deg.	The bias will range from zero to plus 10 deg.
−5, +15 lb	The bias will range from minus 5 to plus 15 lb.
0, +7 psia	The bias will range from zero to plus 7 psia.
−8, 0 deg.	The bias will range from minus 8 to zero deg.

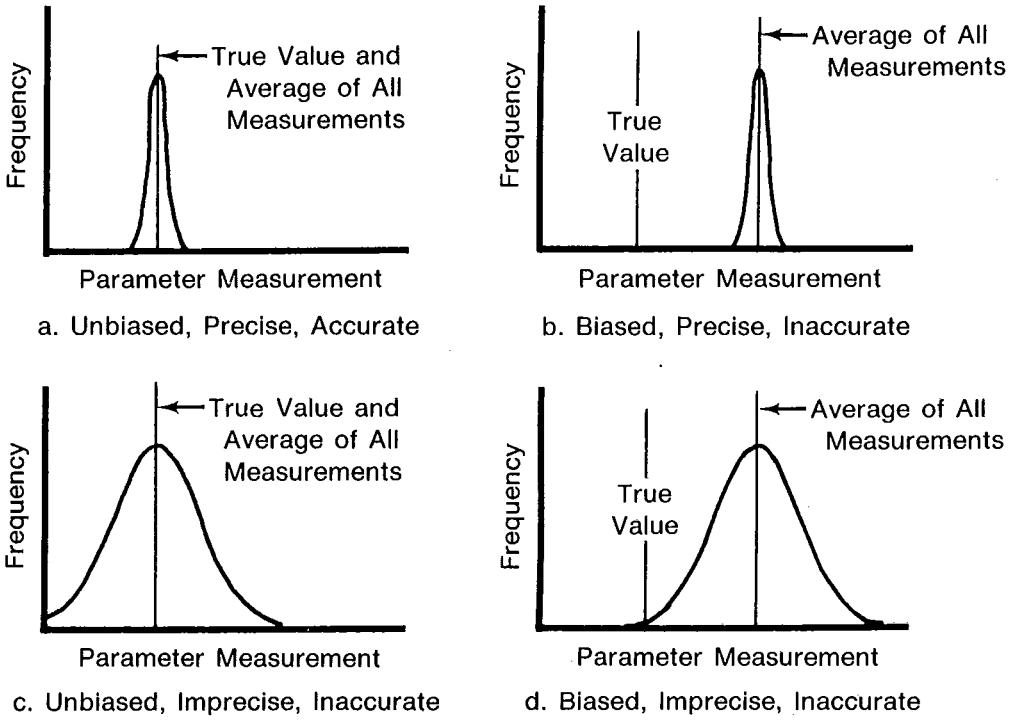

FIG. 4 MEASUREMENT ERROR (BIAS, PRECISION, AND ACCURACY)

from compressor speed-flow rig data, (3) estimated from the turbine flow parameter, and (4) estimated from jet nozzle calibrations;

(*d*) When it is known that a bias results from a particular cause, special calibrations and studies may be performed allowing the cause to perturbate through its complete range to determine the range of bias.

(*e*) If there is no source of data for bias, the estimate must be based on judgment. An estimate of an upper limit on the largest possible bias error is needed. (Largest is intended to imply the equivalent of three standard deviations for a normal distribution.) Instrumentation manufacturers' reports and other references may provide information.

1.4.3.5 Remaining Biases of Known Sign and Unknown Magnitude — Nonsymmetrical. Sometimes the physics of the measurement system provides knowledge of the sign but not the magnitude of the bias. For example, hot thermocouples radiate and conduct energy to indicate lower temperatures. The bias limits which result are *nonsymmetrical*, i.e., not of the form $\pm B$. They are of the form $^{+b}_{-c}$ where both limits may be positive or negative, or the limits may be of mixed sign as indicated. Table 2 lists several nonsymmetrical bias limits for illustration.

In summary, measurement systems are subject to two types of errors: bias and precision error (Fig. 4).

Copyright ASME International
Provided by IHS under license with ASME
No reproduction or networking permitted without license from IHS
Not for Resale

One sample standard deviation is used as the precision index S. The bias limit B is estimated as an upper limit of the fixed error β and is determined using the judgment of the experts. An accurate measurement is one that has both small precision error and small bias error.

1.5 MEASUREMENT ERROR SOURCES

For purposes of illustration, the elemental error sources for a basic measurement will be treated in this section. These error sources fall into three categories:

(*1*) calibration
(*2*) data acquisition
(*3*) data reduction

To decide if a given elemental source contributes to bias, precision, or both, we adopt the following recommendation: "The uncertainty of a measurement should be put into one of two categories depending on how the uncertainty is derived. A random uncertainty is derived by a statistical analysis of repeated measurements while a systematic uncertainty usually must be estimated by nonstatistical methods."[1] (See 1.4.3.4 of this Standard.) This recommendation avoids a complex decision and keeps the statistical estimates separate from the judgment estimates as long as possible.

This categorization may be changed later in the analysis when we consider the defined measurement process. For example, with some test programs, calibration precision errors become bias errors. This will be discussed in 1.6.

1.5.1 Calibration Errors

In recent years the demanding requirements of military and commercial contracts have led to the establishment of extensive hierarchies of standards laboratories within industry. In the USA, the NBS is at the apex of these hierarchies, providing the ultimate reference for each standards laboratory. It has become commonplace for government contracting agencies to require contractors to establish and prove traceability of their measurement standards to the NBS. This requirement has created even more extensive hierarchies of standards within the individual standards laboratories.

Each calibration in the hierarchy, including NBS, constitutes an error source. Fig. 5 is a typical transducer calibration hierarchy. Associated with each comparison in the calibration hierarchy is a pair of elemental errors. These errors are the known bias and the precision index in each process. Note that these elemental errors are not cumulative, e.g., B_{21} is not a function of B_{11}. The error sources are listed in Table 3.

To avoid confusion it seems prudent to give some explanation here of the elemental error subscripts. Each subscript contains two digits. The second digit indicates the error category, i.e., (1) calibration, (2) data acquisition, and (3) data reduction. The first digit is the number arbitrarily assigned to the position of a particular error in a list of errors, e.g., "B_{42}" (Table 4) is the bias error associated with the recording device. The first digit is "4" simply because this error source is fourth in the list, and the second digit is "2" because it is a data acquisition error.

1.5.2 Data Acquisition Errors

Figure 6 illustrates some of the error sources associated with a typical data acquisition system. Data are acquired by measuring the electrical output resulting from pressure applied to a strain-gage-type pressure measurement instrument. Other error sources, such as electrical simulation, probe errors, and environmental effects, are also present. The best method to determine the effects of all of these error sources is to perform end-to-end calibrations and compare known applied pressures with measured values. However, it is not always possible to do this, and then it is necessary to evaluate each of the elemental errors and combine them

[1] National Physical Laboratory, Teddington, England. 1973. A Code of Practice for the Detailed Statement of Accuracy. Campion, P. J., Burns, J. E., and Williams, A. Section 5 Recommendations. London: H. M. Stationary Office.

Copyright ASME International
Provided by IHS under license with ASME
No reproduction or networking permitted without license from IHS
Not for Resale

TABLE 3 CALIBRATION HIERARCHY ERROR SOURCES

Calibration	Bias Limit	Precision Index	Degrees of Freedom
NBS-ILS	B_{11}	S_{11}	df_{11}
ILS-TS	B_{21}	S_{21}	df_{21}
TS-WS	B_{31}	S_{31}	df_{31}
WS-MI	B_{41}	S_{41}	df_{41}

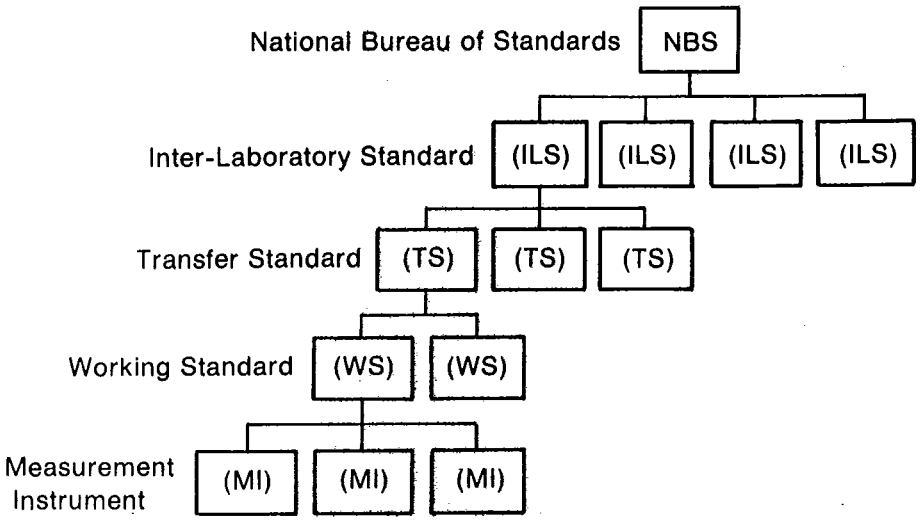

FIG. 5 BASIC MEASUREMENT CALIBRATION HIERARCHY

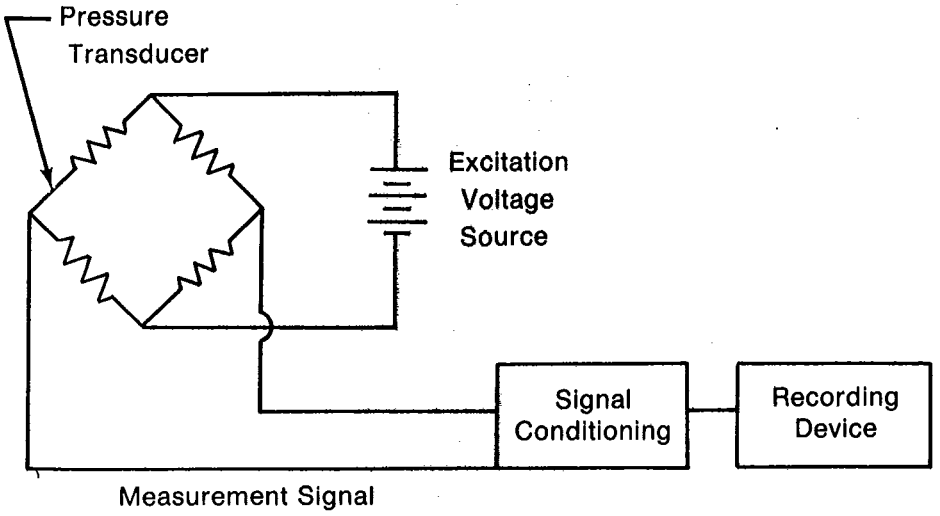

FIG. 6 DATA ACQUISITION SYSTEM

Copyright ASME International
Provided by IHS under license with ASME
No reproduction or networking permitted without license from IHS
Not for Resale

TABLE 4 DATA ACQUISITION ERROR SOURCES

Error Source	Bias Limit	Precision Index	Degrees of Freedom
Excitation Voltage	B_{12}	S_{12}	ν_{12}
Electrical Simulation	B_{22}	S_{22}	ν_{22}
Signal Conditioning	B_{32}	S_{32}	ν_{32}
Recording Device	B_{42}	S_{42}	ν_{42}
Pressure Transducer	B_{52}	S_{52}	ν_{52}
Probe Errors	B_{62}	S_{62}	ν_{62}
Environmental Effects	B_{72}	S_{72}	ν_{72}

TABLE 5 DATA REDUCTION ERROR SOURCES

Error Source	Bias Limit	Precision Index	Degrees of Freedom
Curve Fit	B_{13}	S_{13}	ν_{13}
Computer Resolution	B_{23}	S_{23}	ν_{23}

to determine the overall error. (An end-to-end calibration applies a known or standard pressure to the pressure transducer and records the system response through the data acquisition and data reduction systems.)

Some of the data acquisition error sources are listed in Table 4. Symbols for the elemental bias and precision errors and for the degrees of freedom are shown.

1.5.3 Data Reduction Errors

Computers operate on raw data to produce output in engineering units. Typical errors in this process stem from curve fits and computer resolution.

Symbols for the data reduction error sources are listed in Table 5. These errors are often negligible.

1.6 DEPENDENCY OF ERROR CLASSES ON THE DEFINED MEASUREMENT PROCESS

In making uncertainty analyses, definition of the measurement process is of utmost importance. Uncertainty statements must be based on a well-defined measurement process. A typical process is the measurement of airflow for a gas turbine engine at a given test facility (2.3). The uncertainty of this measurement process will contain errors due to variations between calibrations, test stands, and measurement instruments. The uncertainty analysis will be different from the uncertainty analysis for a back-to-back comparative test to measure airflow on a single test stand for a single engine, which is a different measurement process (2.4). Biases may be ignored in comparative testing in that the same equipment must be used for all testing, and biases do not affect the comparison of one test with another (the test objective being to determine if a design change is beneficial). In the two examples, 2.3 and 2.4, the same engine, instrumentation, and test stand might be used; the difference in uncertainty is due to the difference in test objectives and test duration.

The planned instrumentation, type, and number is also part of the definition of the measurement process. If the end measurement is an average of (a) a series of individual repeat points, or (b) a number of simultaneous readings, or (c) a combination of both, this must also be specified, as the precision index depends on this information. Significant reductions in the effect of precision error can be obtained if averaging can be used. (Averaging can be used with repeated single measurements if the measured variable is constant or if redundant instruments can be recorded simultaneously.)

Copyright ASME International
Provided by IHS under license with ASME
No reproduction or networking permitted without license from IHS
Not for Resale

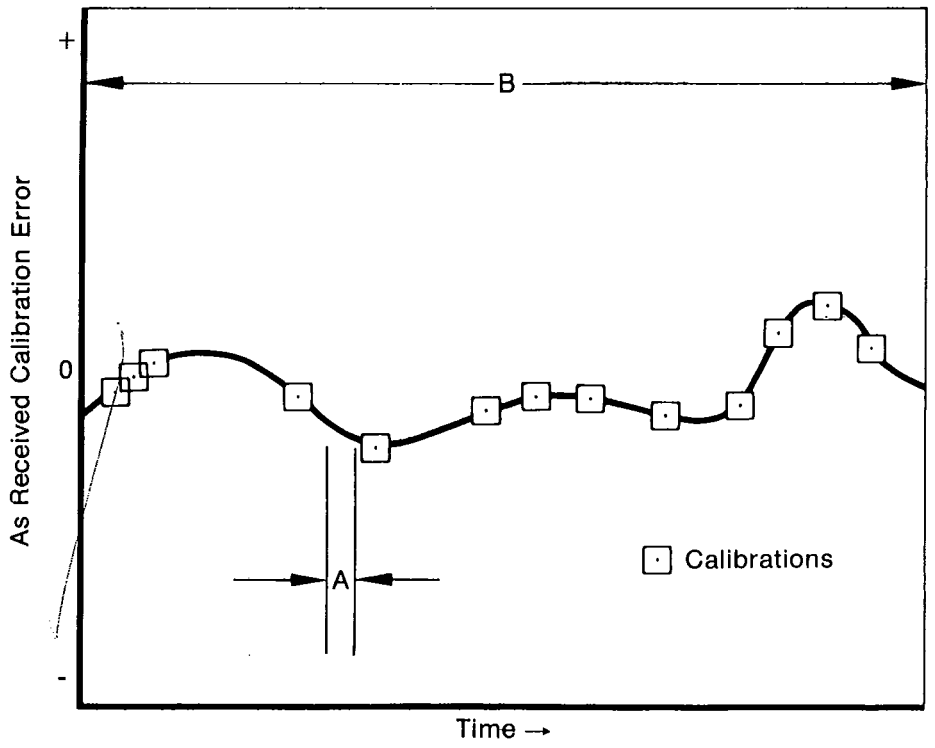

FIG. 7 TRENDING ERROR CALIBRATION HISTORY – TREAT AS PRECISION

1.6.1 Combining Elemental Precision Indices

The precision index S is the root-sum-square of the elemental precision indices from all sources.

$$S = \sqrt{\sum_j \sum_i S_{ij}^2} \tag{2}$$

where j defines the processes: (1) calibration, (2) data acquisition, and (3) data reduction; and i defines the sources within the process.

For example, the precision index for the calibration process is the root-sum-square of the elemental precision indices.

$$S_1 = S_{\text{cal}} = \sqrt{S_{11}^2 + S_{21}^2 + S_{31}^2 + S_{41}^2} \tag{3}$$

Precision errors from the calibration process merit special consideration. There are four cases to consider as shown in (a) through (d) below:

(*a*) If the test period is long enough that instrumentation may be calibrated more than once, or several test stands are involved, or both, the precision errors in the calibration hierarchy should be treated as contributing to the overall precision index.

(*b*) For a single set of instrumentation, calibrated only once during the test, all the calibration errors are frozen or fossilized into bias. The uncertainty of the calibration process is all bias.

(*c*) For back-to-back, comparative development tests where the test objective is the difference between two successive tests, the calibration error (bias plus precision) is a constant in both tests and is eliminated by taking the difference. Trending errors are an exception as described in (d), below.

(*d*) Elemental errors that trend with time merit special attention. For example, consider a flowmeter with a calibration history as shown in Fig. 7. The data show some trending characteristics. Every effort

Copyright ASME International
Provided by IHS under license with ASME
No reproduction or networking permitted without license from IHS

Not for Resale

should be made to remove or reduce the trending. If the test process is long, like "B," including many calibrations, this error is a precision error. [See (a), above.]

On the other hand, if the test is short, like "A," an argument can be made that this error is fixed, and therefore a bias. We believe this argument is weak, too complex, and may lead to optimistic uncertainty estimates. We therefore recommend always treating trending errors as precision, in accordance with 1.5.

In back-to-back comparative tests, trending errors should be carefully evaluated, as they may introduce large errors.

In summary, trending errors should (1) be treated as precision (a sample standard deviation can be calculated from the calibration history), (2) never be fossilized into bias, and (3) always be included in all uncertainty estimates. In other words, a trending error will be the exception to both (b) and (c) above, and will always contribute to the precision term of the uncertainty estimate.

The precision index for the data acquisition process is the root-sum-square of the elemental precision indices.

$$S_2 = S_{\text{data acquisition}} = \sqrt{S_{12}^2 + S_{22}^2 + S_{32}^2 + S_{42}^2 + S_{52}^2 + S_{62}^2 + S_{72}^2} \tag{4}$$

The precision index for the data reduction process is the root-sum-square of the elemental precision indices.

$$S_3 = S_{\text{data reduction}} = \sqrt{S_{13}^2 + S_{23}^2} \tag{5}$$

The basic measurement precision index is the root-sum-square of all the elemental precision indices in the measurement system.

$$S = \sqrt{S_1^2 + S_2^2 + S_3^2}$$

$$= \sqrt{S_{11}^2 + S_{21}^2 + S_{31}^2 + S_{41}^2 + S_{12}^2 + S_{22}^2 + S_{32}^2 + S_{42}^2 + S_{52}^2 + S_{62}^2 + S_{72}^2 + S_{13}^2 + S_{23}^2} \tag{6}$$

1.6.2 Combining Elemental Bias Limits

In practice, most measurements will have many sources of bias limits from calibration, data acquisition, and data reduction.[2] As long as none of them are extremely large relative to the others, the quadrature sum (root-sum-square) is a very good approximation of the combination of such errors.[3] This can be shown by both theory and simulation.

$$B = \sqrt{\sum_j \sum_i B_{ij}^2} \tag{7}$$

If there are a few (say four or less) very large bias limits (say 10 times larger than the others), the quadrature sum may underestimate the true bias error. In this case the large, few bias limits should be added to the quadrature sum of the others. For example, if B_{21} and B_{32} are more than 10 times larger than the largest of all the other bias limits:

$$B = B_{21} + B_{32} + \sqrt{\left(\sum_j \sum_i B_{ij}^2\right) - B_{21}^2 - B_{32}^2} \tag{8}$$

[2] "A full breakdown would probably reveal several dozen primary sources of uncertainty in the measurement of efficiency." (Hayward, A. T. J. 1977. Repeatability and Accuracy. London and New York: Mechanical Engineering Publications Ltd., p. 10. Distributed by Mechanical Engineering Publications, Suite 1210, 200 West 57th Street, New York, NY 10019.)

[3] "The real justification for adding uncertainty components in quadrature is that it seems to work. Experience has shown that arithmetic addition of components often leads to a large overestimate of total uncertainty." (Repeatability and Accuracy, p. 19)

Copyright ASME International
Provided by IHS under license with ASME
No reproduction or networking permitted without license from IHS
Not for Resale

This procedure protects against B_{21} and B_{32} having the same sign, as the probability of this event is quite high, i.e., one-half. By the time there are five or more large bias limits, the probability of all the signs being the same is much smaller, and therefore, the linear addition is not required.

If any of the elemental bias limits are nonsymmetrical, separate root-sum-squares are used to obtain B^+ and B^-. For example, assume B_{21} and B_{23} are nonsymmetrical, i.e., B_{21}^+, B_{21}^-, B_{23}^+, and B_{23}^- are available. Then,

$$B^+ = \sqrt{B_{11}^2 + (B_{21}^+)^2 + B_{31}^2 + B_{41}^2 + B_2^2 + B_{13}^2 + (B_{23}^+)^2} \tag{9}$$

$$B^- = \sqrt{B_{11}^2 + (B_{21}^-)^2 + B_{31}^2 + B_{41}^2 + B_2^2 + B_{13}^2 + (B_{23}^-)^2} \tag{10}$$

1.6.3 Combining Degrees of Freedom

In a sample, the number of degrees of freedom ν is the size of the sample. When a statistic is calculated from the sample, the degrees of freedom associated with the statistic are reduced by one for every estimated parameter used in calculating the statistic. For example, from a sample of size N, $\bar{X}$ is calculated:

$$\bar{X} = \sum_{i=1}^{N} X_i/N \tag{11}$$

which has N degrees of freedom and

$$S = \sqrt{\frac{\sum_{i=1}^{N} (X_i - \bar{X})^2}{N-1}} \tag{12}$$

which has $N - 1$ degrees of freedom because $\bar{X}$ (based on the same sample of data) is used to calculate S. In calculating other statistics, more than one degree of freedom may be lost. For example, in calculating the standard error of a curve fit, the number of degrees of freedom which are lost is equal to the number of estimated coefficients for the curve.

The degrees of freedom ν associated with the precision index are calculated using the Welch-Satterthwaite formula. It is a function of the degrees of freedom and magnitude of each elemental precision index.

For example, the degrees of freedom for the calibration precision index S_{cal} are

$$\nu_1 = \frac{\left(\sum_i S_{i1}^2\right)^2}{\sum_i \frac{S_{i1}^4}{\nu_{i1}}}$$

where ν_{ij} is the degrees of freedom of each elemental precision index.

$$\nu_1 = \frac{(S_{11}^2 + S_{21}^2 + S_{31}^2 + S_{41}^2)^2}{\left(\frac{S_{11}^4}{\nu_{11}} + \frac{S_{21}^4}{\nu_{21}} + \frac{S_{31}^4}{\nu_{31}} + \frac{S_{41}^4}{\nu_{41}}\right)} \tag{13}$$

Copyright ASME International
Provided by IHS under license with ASME
No reproduction or networking permitted without license from IHS

Not for Resale

The degrees of freedom for the measurement precision index S are

$$\nu = \frac{(S_{11}^2 + S_{21}^2 + S_{31}^2 + S_{41}^2 + S_{12}^2 + S_{22}^2 + S_{32}^2 + S_{42}^2 + S_{52}^2 + S_{62}^2 + S_{72}^2 + S_{13}^2 + S_{23}^2)^2}{\left(\frac{S_{11}^4}{\nu_{11}} + \frac{S_{21}^4}{\nu_{21}} + \frac{S_{31}^4}{\nu_{31}} + \frac{S_{41}^4}{\nu_{41}} + \frac{S_{12}^4}{\nu_{12}} + \frac{S_{22}^4}{\nu_{22}} + \frac{S_{32}^4}{\nu_{32}} + \frac{S_{42}^4}{\nu_{42}} + \frac{S_{52}^4}{\nu_{52}} + \frac{S_{62}^4}{\nu_{62}} + \frac{S_{72}^4}{\nu_{72}} + \frac{S_{13}^4}{\nu_{13}} + \frac{S_{23}^4}{\nu_{23}}\right)} \quad (14)$$

1.7 MEASUREMENT UNCERTAINTY INTERVAL – COMBINING BIAS AND PRECISION

The measurement uncertainty analysis is largely completed when:

(*a*) all the elemental sources of error have been identified and categorized into bias limits and precision indices;

(*b*) these errors have been propagated to errors in the test result, keeping bias and precision separate;

(*c*) an estimate of the degrees of freedom of the precision index of the test result has been calculated from the Welch-Satterthwaite formula, if less than 30.

However, for simplicity of presentation, a single number (some combination of bias and precision) is needed to express a reasonable limit for total error. The single number must have a simple interpretation (like the largest error reasonably expected) and be useful without complex explanation. It is impossible to define a single rigorous statistic because the bias is an upper limit based on judgment which has unknown characteristics. Any function of these two numbers must be a hybrid combination of an unknown quantity (bias) and a statistic (precision). If both numbers were statistics, a confidence interval would be recommended. Confidence levels of 95% or 99% would be available at the discretion of the analyst. Although rigorous statistical confidence levels are not available, two uncertainty intervals are recommended, analogous to 95% and 99% levels, i.e., intervals which are smaller and larger in size. This analogy is discussed in 1.7.3.

1.7.1 Symmetrical Interval

Uncertainty (Fig. 8) for the symmetrical bias limit case is centered about the measurement, and the interval is defined as $\bar{X} \pm U$
where

$$U_{\text{ADD}} = U_{99} = \pm(B + t_{95}S) \quad (15A)$$

$$U_{\text{RSS}} = U_{95} = \pm\sqrt{B^2 + (t_{95}S)^2} \quad (15B)$$

where B is the bias limit, S is the precision index, and t_{95} is the 95th percentile point for the two-tailed Student's t distribution. The t value is a function of the number of degrees of freedom ν used in calculating S. (See Appendix D.) For small samples, t will be large, and for larger samples, t will be smaller, approaching 1.96 as a lower limit. The use of the t inflates the limit U to reduce the risk of underestimating σ when a small sample is used to calculate S. Since 30 degrees of freedom ν yield a t of 2.04 and infinite degrees of freedom yield a t of 1.96, an arbitrary selection of $t = 2$ for values of ν from 30 to infinity was made, i.e., $U_{99} = (B + 2S)$, when $\nu \geqslant 30$.

The uncertainty interval selected [Eq. (15A) or (15B)] should be provided in the presentation; the components (bias, precision, degrees of freedom) should be available in an appendix or in supporting documentation. These three components may be required (a) to substantiate and explain the uncertainty value, (b) to provide a sound technical base for improved measurements, and (c) to propagate the uncertainty from measured parameters to fluid flow parameters, and from fluid flow parameters to more complex performance parameters [fuel flow to Thrust Specific Fuel Consumption (TSFC), TSFC to aircraft range, etc.].

Copyright ASME International
Provided by IHS under license with ASME
No reproduction or networking permitted without license from IHS
Not for Resale

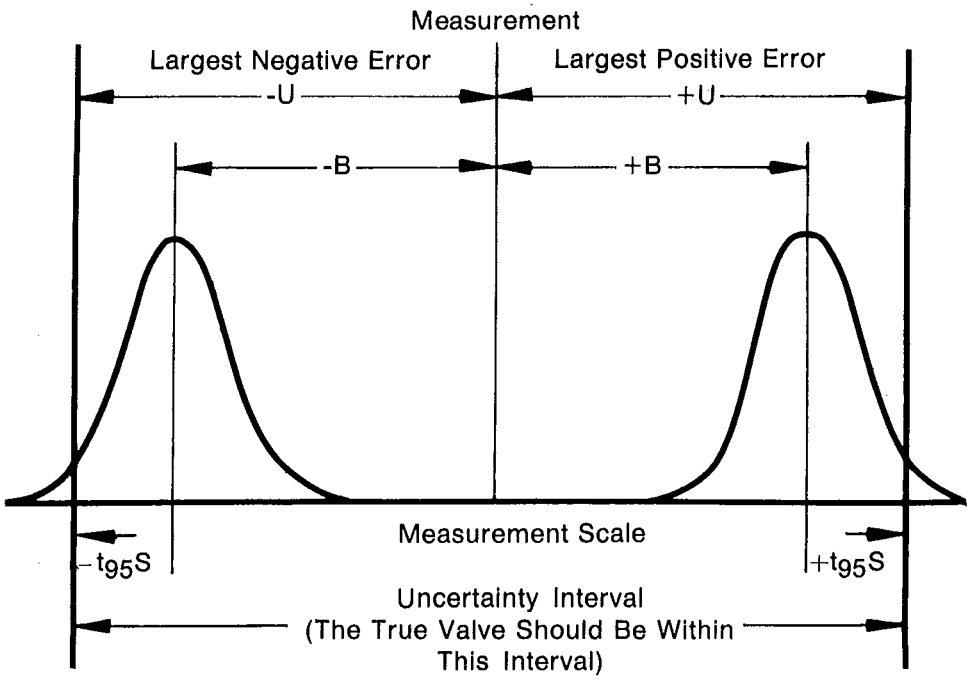

FIG. 8 MEASUREMENT UNCERTAINTY; SYMMETRICAL BIAS

The authors wish to point out that although the 95% confidence interval for the precision error is used throughout this document, the uncertainty model presented here will perform equally well with other confidence intervals. When other confidence intervals are used, the coverage of the resulting uncertainty interval will be changed.

1.7.2 Nonsymmetrical Interval

If there is a nonsymmetrical bias limit (Fig. 9), the uncertainty U is no longer symmetrical about the measurement. The upper limit of the interval is defined by the upper limit of the bias interval B^+. The lower limit is defined by the lower limit of the bias interval B^-. The uncertainty interval U is

$$U_{99}^- = B^- - t_{95}S \text{ to } U_{99}^+ = B^+ + t_{95}S$$

and

$$U_{95}^- = \sqrt{(B^-)^2 + (t_{95}S)^2} \text{ to } U_{95}^+ = \sqrt{(B^+)^2 + (t_{95}S)^2}$$

Table 6 shows the uncertainty U for the nonsymmetrical bias limits of Table 2.

1.7.3 Uncertainty Interval Coverage

1.7.3.1 General. A rigorous calculation of confidence level or the coverage of the true value by the interval is not possible because the distributions of bias errors and limits, based on judgment, cannot be rigorously defined. Monte Carlo simulation of the intervals can provide approximate coverage based on assuming var-

Copyright ASME International
Provided by IHS under license with ASME
No reproduction or networking permitted without license from IHS
Not for Resale

TABLE 6 UNCERTAINTY INTERVALS DEFINED BY NONSYMMETRICAL BIAS LIMITS

B^-	B^+	$t_{95}S$	U^- (Lower limit for U)	U^- (Upper limit for U)
0 deg.	+10 deg.	2 deg.	−2 deg.	−12 deg.
−5 lb	+15 lb	2 lb	−7 lb	−17 lb
0 psia	+7 psia	2 psia	−2 psia	−9 psia
−8 deg.	0 deg.	2 deg.	−10 deg.	+2 deg.

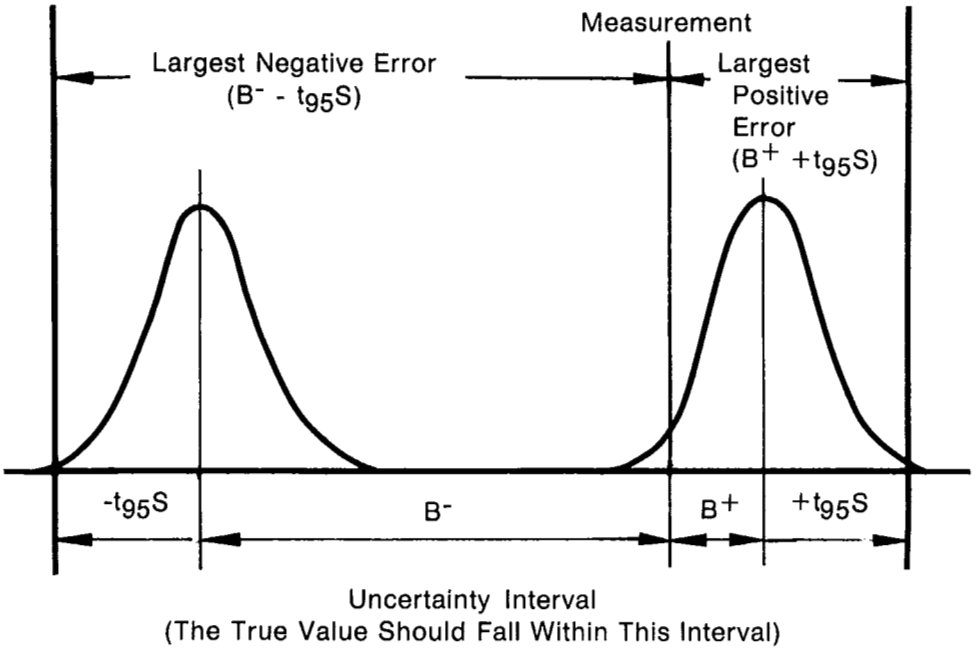

FIG. 9 MEASUREMENT UNCERTAINTY; NONSYMMETRICAL BIAS

ious bias error distributions and bias limits. As the actual bias error and bias limit distributions will probably never be known, the simulation studies were based on a range of assumptions.

1.7.3.2 Results. The results of these studies comparing the two intervals are given in (a) through (d) below:

(*a*) U_{99} averages approximately 99.1% coverage while U_{95} provides 95.0% based on bias limits assumed to be 95%. For 99.7% bias limits, U_{99} averages 99.7% coverage and U_{95}, 97.5%.

(*b*) The ratio of the average U_{99} interval size to U_{95} interval size is 1.35 : 1.

(*c*) If the bias error is negligible, both intervals provide a 95% statistical confidence (coverage).

(*d*) If the precision error is negligible, both intervals provide 95% or 99.7% depending on the assumed bias limit size.

1.7.3.3 Simulation Cases. The following cases are considered:

(*a*) from 3 to 19 error sources, both bias and precision;

(*b*) bias distributed both normally and rectangularly;

(*c*) precision error distributed normally;

(*d*) bias limits at three sigma for the normal and two sigma for the rectangular;

Copyright ASME International
Provided by IHS under license with ASME
No reproduction or networking permitted without license from IHS
Not for Resale

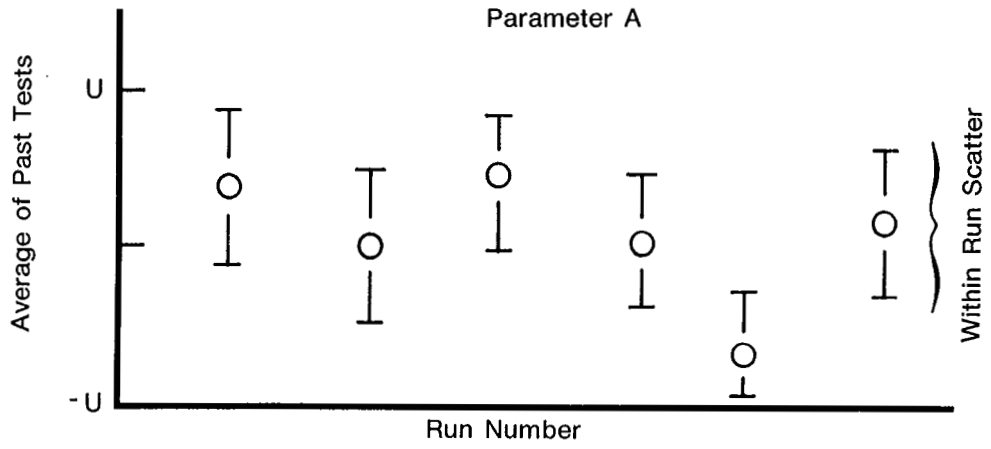

FIG. 10 RUN-TO-RUN DIFFERENCE

(*e*) precision indexes based on sample sizes from 3 to 30;
(*f*) ratio of precision to bias errors at 0.5, 1.0, and 2.0.

If this coverage is considered too conservative (it is the equivalent of plus and minus three standard deviations for the normal distribution), an average coverage of 95% can be obtained by shortening the intervals by multiplying by the ratio of 1.96 to 3.0 or 0.653 *U*. If this approximation is used, it should be clearly indicated in the measurement uncertainty report to avoid confusion with the usual, more conservative intervals.

1.7.4 How to Interpret Uncertainty

Uncertainty is a function of the measurement process. It provides an estimate of the error band within which the true value for that measurement process must fall with high probability.

Errors larger than the uncertainty should rarely occur. On repeated runs within a given measurement process, the parameter values should be within the uncertainty interval. These differences might look like Fig. 10. Run-to-run differences between corresponding values of the parameter should be less than the uncertainty for the parameter.

If a change is to be detected as a result of an experiment, then the uncertainty of the experiment should be a fraction of the predicted change or corrective action should be taken to reduce the uncertainty. Therefore, measurement uncertainty analysis should always be done before the test or experiment. The corrective action to reduce the uncertainty may involve (a) improvements or additions to the instrumentation, (b) selection of a different function to obtain the parameter of interest, (c) repeated testing, or (d) any combination of (a), (b), or (c). Cost and time will dictate the choice. If corrective action cannot be taken, the test should be cancelled as there is a high risk that the real differences will be lost in the uncertainty interval (undetected). If the measurement uncertainty analysis is made after the test, the opportunity for corrective action is lost, and the test may be wasted.

1.8 PROPAGATION OF MEASUREMENT ERRORS

Rarely are fluid flow parameters measured directly; usually more basic quantities such as temperature and pressure are measured, and the fluid flow parameter is calculated as a function of the measurements. Error in the measurements is propagated to the parameter through the function. The effect of the propagation may be approximated with the Taylor series methods (Appendix B). It is convenient to introduce the concept of the sensitivity of a result to a subsidiary quantity as the error propagated to the result due to

Copyright ASME International
Provided by IHS under license with ASME
No reproduction or networking permitted without license from IHS
Not for Resale

unit error in the measurement of the component quantity. The "sensitivity coefficient" of each subsidiary quantity is most easily obtained in one of two ways.

(*a*) *Analytically.* When there is a known mathematical relationship between the result R and subsidiary quantities $Y_1, Y_2, \ldots, Y_k$, the dimensional sensitivity coefficient θ_i of the quantity Y_1 is obtained by partial differentiation.

Thus, if $R = f(Y_1, Y_2, \ldots, Y_k)$, then

$$\theta_i = \frac{\partial R}{\partial Y_i}$$

(*b*) *Numerically.* Where no mathematical relationship is available or when differentiation is difficult, finite increments may be used to evaluate θ_i.

Here, θ_i is given by

$$\theta_i = \frac{\Delta R}{\Delta Y_i}$$

The result is calculated using Y_i to obtain R, and then recalculated using $(Y_i + \Delta Y_i)$ to obtain $(R + \Delta R)$. The value of ΔY_i used should be as small as practicable.

With complex parameters, the same measurement may be used more than once in the formula. This may increase or decrease the error depending on whether the sign of the measurement is the same or opposite, and thus care must be taken in estimating the final error. If the Taylor series relates the most elementary measurements to the ultimate parameter or result, these "linked" relationships will be properly accounted for.

This subject is discussed further with examples in Appendix B.

1.8.1 Airflow Example

In this example, airflow is determined by the use of a choked venturi and measurements of upstream stagnation temperature and stagnation pressure (Fig. 11).

The flow is calculated from

$$m = CaF_a\phi^* \frac{P_{1t}}{\sqrt{T_{1t}}} \qquad (16)^4$$

where

m = the mass flowrate of air
F_a = the factor to account for thermal expansion of the venturi
a = the venturi throat area
P_{1t} = the total (stagnation) pressure upstream
T_{1t} = the total temperature upstream
ϕ^* = the factor to account for the properties of the air (critical flow constant)
C = discharge coefficient
A_{eff} = Ca (may be determined from calibration)

The precision index for the flow S_m is calculated using the Taylor series expansion (this method is derived in Appendix B):

$$S_m = \sqrt{\left(\frac{\partial m}{\partial F_a} S_{F_a}\right)^2 + \left(\frac{\partial m}{\partial \phi^*} S\phi^*\right)^2 + \left(\frac{\partial m}{\partial a} S_a\right)^2 + \left(\frac{\partial m}{\partial P_{1t}} S_{P_{1t}}\right)^2 + \left(\frac{\partial m}{\partial T_{1t}} S_{T_{1t}}\right)^2} \qquad (17)$$

[4] ASME. 1971. Fluid Meters. 6th ed. Edited by H. S. Bean. Available from ASME, United Engineering Center, 345 East 47th St., New York, NY 10017.

Copyright ASME International
Provided by IHS under license with ASME
No reproduction or networking permitted without license from IHS
Not for Resale

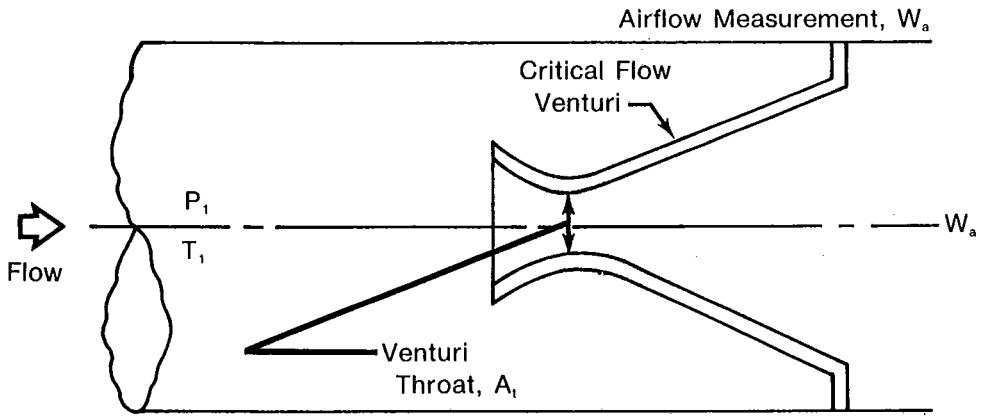

FIG. 11 FLOW THROUGH A CHOKED VENTURI

where, for example,

$\frac{\partial m}{\partial F_a}$ denotes the partial derivative of m with respect to F_a.

Taking the necessary partial derivatives and assuming C constant and with negligible error

$$S_m = C\sqrt{\left(\frac{\phi^* a P_{1t}}{\sqrt{T_{1t}}} S_{F_a}\right)^2 + \left(\frac{F_a a P_{1t}}{\sqrt{T_{1t}}} S\phi^*\right)^2 + \left(\frac{F_a \phi^* P_{1t}}{\sqrt{T_{1t}}} S_a\right)^2 + \left(\frac{F_a \phi^* a}{\sqrt{T_{1t}}} S_{P_{1t}}\right)^2 - \left(\frac{F_a \phi^* a P_{1t}}{-2\sqrt{T_{1t}^3}} S_{T_{1t}}\right)^2} \tag{18}$$

By inserting the values and precision errors from Table 7 into Eq. (18) and assuming $C = 1$, the precision index of 0.37 lb/sec (0.17 kg/s) for airflow is obtained.

The bias limit in the flow calculation is propagated from the bias limits of the measured variables. The general form of the Taylor series formula (see Appendix B) is:

$$B_f = \sqrt{\left(\frac{\partial f}{\partial x_1} B_{x_1}\right)^2 + \left(\frac{\partial f}{\partial x_2} B_{x_2}\right)^2 + \left(\frac{\partial f}{\partial x_3} B_{x_3}\right)^2 + \cdots + \left(\frac{\partial f}{\partial x_n} B_{x_n}\right)^2} \tag{19}$$

For this example, where $m = F_a \phi^* C a P_{1t}/\sqrt{T_{1t}}$:

$$B_m = \sqrt{\left(\frac{\partial m}{\partial F_a} B_{F_a}\right)^2 + \left(\frac{\partial m}{\partial \phi^*} B\phi^*\right)^2 + \left(\frac{\partial m}{\partial a} B_a\right)^2 + \left(\frac{\partial m}{\partial P_{1t}} B_{P_{1t}}\right)^2 + \left(\frac{\partial m}{\partial T_{1t}} B_{T_{1t}}\right)^2} \tag{20}$$

Taking the necessary partial derivatives gives

$$B_m = C\sqrt{\left(\frac{\phi^* a P_{1t}}{\sqrt{T_{1t}}} B_{F_a}\right)^2 + \left(\frac{F_a a P_{1t}}{\sqrt{T_{1t}}} B\phi^*\right)^2 + \left(\frac{F_a \phi^* P_{1t}}{\sqrt{T_{1t}}} B_a\right)^2 + \left(\frac{F_a \phi^* a}{\sqrt{T_{1t}}} B_{P_{1t}}\right)^2 + \left(\frac{F_a \phi^* a P_{1t}}{-2\sqrt{T_{1t}^3}} B_{T_{1t}}\right)^2} \tag{21}$$

Copyright ASME International
Provided by IHS under license with ASME
No reproduction or networking permitted without license from IHS
Not for Resale

TABLE 7 FLOW DATA

Parameter	Units		Nominal Value		Precision Index (One Standard Deviation)		Bias Limit	
	English	SI	English	SI	English	SI	English	SI
F_a			1.00	1.00	0.0	0.0	0.001	0.001
ϕ^*	$\frac{lb_m R^{1/2}}{lb\ sec}$	$\frac{kg\ K^{1/2}}{N \cdot s}$	0.532	0.0404	0.0	0.0	0.000532	4.04×10^{-5}
a	$in.^2$	m^2	296.0	0.191	0.148	9.55×10^{-5}	0.592	3.82×10^{-4}
P_{1t}	psia	Pa	36.8	2.54×10^5	0.05	345.0	0.05	345.0
T_{1t}	°R	K	545.0	303.0	0.3	0.17	0.3	0.17
$\dot{m}$	$\frac{lb_m}{sec}$	kg/s	248.23	112.64	0.37	0.17	0.70	0.32

By inserting the values and bias limits of the measured parameters from Table 6 into Eq. (21), a bias limit of 0.6987 lb/sec (0.32 kg/s) is obtained for a nominal airflow of m = 248.23 lb/sec (112.64 kg/s).

Table 7 contains a summary of the measurement uncertainty analysis for this flow measurement. It should be noted that the error quantities listed only apply at the nominal values.

1.9 MEASUREMENT UNCERTAINTY ANALYSIS REPORT

1.9.1 General

The measurement uncertainty analysis report should include (a) a measurement uncertainty summary and (b) a table of elemental error sources.

1.9.2 Measurement Uncertainty Summary

The definition of the components, bias limit, precision index, and the limit U suggests a summary format for reporting measurement error. The format will describe the components of error, which are necessary to estimate further propagation of the errors, and a single value U which is the largest error expected from the combined errors. Additional information – degrees of freedom for the estimate of S – is required to use the precision index. These summary numbers provide the information necessary to accept or reject the measurement error. The reporting format is:

(*a*) S, the estimate of the precision index, calculated from data;

(*b*) ν, the degrees of freedom associated with the estimate of the precision index S. The degrees of freedom for small samples (less than 30) is obtained from the Welch-Satterthwaite procedure illustrated in the examples. This may be omitted if the alternate model is used and there is no need to further propagate the error.

(*c*) B, the upper limit of the bias error of the measurement process, or B^- and B^+, if the bias limit is nonsymmetrical;

(*d*) The uncertainty interval formula should be stated. $U_{99} = \pm(B + t_{95}S)$ or $U_{95} = \pm\sqrt{B^2 + (t_{95}S)^2}$, the uncertainty limit, within which the error should reasonably fall. The t value is the 95th percentile of the two-tailed Student's t distribution and is taken as two if the sample size is 30 or greater. If the bias limit is nonsymmetrical, $U^-_{99} = B^- - t_{95}S$ and $U^+_{99} = B^+ + t_{95}S$. No more than two significant places should be reported.

NOTE:
The model components, S, ν, B, and U, are required to report the error of any measurement process. For simplification, the first three components may be relegated to the detailed sections of uncertainty reports and presentations. The first three components, S, ν, and B, are necessary to: (a) indicate corrective action if the uncertainty is unacceptably large before the test, (b) propagate the uncertainty to more complex parameters, and (c) substantiate the uncertainty limit.

Copyright ASME International
Provided by IHS under license with ASME
No reproduction or networking permitted without license from IHS
Not for Resale

1.9.3 Table of Elemental Error Sources

To support the measurement uncertainty summary, a table detailing the elemental error sources is needed for several purposes. If corrective action is needed to reduce the uncertainty or to identify data validity problems, the elemental contributions are required. Further, if the uncertainty quoted in the summary appears to be optimistically small, the list of sources considered should be reviewed to identify missing sources. For this reason it is important to list all sources considered, even if negligible.

Note that all errors in Table 8 have been propagated from the basic measurement to the end test result before listing, and therefore they are expressed in units of the test result.

1.10 PRETEST VS POST-TEST MEASUREMENT UNCERTAINTY ANALYSIS

The accuracy of the test is often part of the test requirements. Such requirements are defined by a pretest measurement uncertainty analysis. It allows corrective action to be taken before the test to improve the uncertainties when they are too large. It is based on data and information that exist before the test, such as calibration histories, previous tests with similar instrumentation, prior measurement uncertainty analysis, and expert opinions. With complex tests there are often alternatives to evaluate, such as different test designs, instrumentation layouts, alternate calculation procedures, concomitant variables, etc. Pretest analysis will identify the most accurate test method.

A post-test measurement uncertainty analysis is required to confirm the pretest estimates or to identify problems. Comparison of test results with the pretest analysis is an excellent data validity check. The precision of the repeated points or redundant instruments should not be significantly larger than the pretest estimates. When redundant instrumentation or calculation methods are available, the individual averages should be within the pretest uncertainty interval (for individuals). (See Fig. 10.) The final uncertainty intervals should be based on post-test analysis.

End-to-end, in-place calibration of the data acquisition and data reduction systems may be done before or after the test. Such calibrations provide excellent uncertainty data for both pretest and post-test analysis.

1.11 MEASUREMENT UNCERTAINTY ANALYSIS PROCEDURE

The procedure to follow in performing measurement uncertainty analyses is as follows.

(*a*) Analyze the formula by which the final answer will be obtained to determine which values (measured or constant) must be investigated in the uncertainty analysis.

(*b*) For each measurement, list every source of error, i.e., calibration errors, data acquisition errors, and data reduction errors.

(*c*) "The elemental error of a measurement should be put into one of two categories depending on how the error is derived. A random error is derived by a statistical analysis of repeated measurements while a systematic error usually must be estimated by nonstatistical methods." (A Code of Practice for the Detailed Statement of Accuracy) See 1.4.3.4 of this Standard.

(*d*) Calculate the precision index S and estimate the bias limit B for each measurement.

(*e*) Propagate the precision index to the test result using the Taylor series expansion [see Eqs. (17) and (18)].

(*f*) Propagate the bias limit for the test result using the Taylor series expansion [see Eqs. (20) and (21)].

(*g*) Examine the defined measurement process to determine the final classification of bias and precision (see 1.6).

(*h*) Develop a table similar to Table 7.

(*i*) Evaluate the degrees of freedom for the calculated parameter using the Welch–Satterthwaite formula [see Eqs. (56) and (57)].

(*j*) Calculate the uncertainty of the calculated parameter using Eq. (52), i.e.,

$$U_{99} = \pm(B + t_{95}S) \text{ and/or } U_{95} = \pm\sqrt{B^2 + (t_{95}S)^2}$$

Copyright ASME International
Provided by IHS under license with ASME
No reproduction or networking permitted without license from IHS

Not for Resale

TABLE 8 ELEMENTAL ERROR SOURCES

ij Subscript	Source	Measurement Nominal Value	Precision Index S_{ij}	Degrees of Freedom ν_{ij}	Bias Limit B_{ij}	t_{95}	$U_{ij} = B_{ij} + t_{95}S_{ij}$
Calibration							
11							
21							
31							
...							
...							
...							
Data Acquisition							
12							
22							
32							
42							
...							
...							
...							
Data Reduction							
13							
23							
33							
...							
...							
...							
		Nominal Value	$S = \sqrt{\Sigma S_{ij}^2}$	ν	$B = \sqrt{\Sigma B^2}$	t_{95}	
Results:			$U = B + t_{95}(S)$	or	$U^* = \sqrt{\Sigma U_{ij}^2}$		
*Alternate uncertainty calculation:							

Copyright ASME International
Provided by IHS under license with ASME
No reproduction or networking permitted without license from IHS
Not for Resale

(*k*) Report the following as a minimum:
- (*1*) precision index S;
- (*2*) degrees of freedom ν;
- (*3*) bias limit B;
- (*4*) uncertainty U – state equation used.

1.12 LIST OF REFERENCES ON STATISTICAL QUALITY CONTROL CHARTS

1.12.1 Basic References

ASTM STP 15-C. ASTM Manual on Quality Control of Materials. Available from ASTM, 1916 Race St., Philadelphia, PA 19103.

ASQC Standard B1-1958 and ASQC Standard B2-1958 (Z1.1-1958 and Z1.2-1958). American Standard Guide for Quality Control and American Standard Control Chart Method of Analyzing Data. Available from ANSI, 1430 Broadway, New York, NY 10018.

ASQC Standard B3-1958 (Z1.3-1958). American Standard Control Chart Method of Controlling Quality During Production. Available from ANSI, 1430 Broadway, New York, NY 10018; or from ASQC, 161 West Wisconsin Avenue, Milwaukee, WI 53203.

Duncan, A. J. 1974. Quality Control and Industrial Statistics. 4th ed. Homewood, Ill.: Richard D. Irwin, Inc.

Cowden, D. J. 1957. Statistical Methods in Quality Control. Englewood Cliffs, N.J.: Prentice-Hall, Inc.

Juran, J. M., Seder, L. A., and Gryna, Jr., F. M., eds. 1962. Quality Control Handbook, 2d ed. New York: McGraw-Hill Book Company, Inc.

1.12.2 Examples of Control Charts in Metrology

Ku, H. H. 1967. Statistical Concepts in Metrology. Chapter 2 of Handbook of Industrial Metrology, American Society of Tool and Manufacturing Engineers, pp. 20-50. New York: Prentice-Hall, Inc. (Reprinted in Precision Measurement and Calibration: Statistical Concepts and Procedures, Special Publication 300, vol. 1, pp. 296-330, H. H. Ku, ed. United States Department of Commerce, National Bureau of Standards. Issued February 1969. Available from the Superintendent of Documents, U.S. Government Printing Office, Washington, DC 20402.)

Pontius, P. E. Measurement Philosophy of the Pilot Program for Mass Calibration. NBS Technical Note 288. Available from the Superintendent of Documents, U.S. Government Printing Office, Washington, DC 20402.

Pontius, P. E., and Cameron, J. M. Realistic Uncertainties and the Mass Measurement Process: An Illustrated Review. National Bureau of Standards Monograph 103. Institute for Basic Standards, National Bureau of Standards. Issued August 15, 1967. (Reprinted in Precision Measurement and Calibration: Statistical Concepts and Procedures, Special Publication 300, vol. 1, pp. 1-20, H. H. Ku, ed. United States Department of Commerce, National Bureau of Standards. Issued February 1969. Available from the Superintendent of Documents, U.S. Government Printing Office, Washington, DC 20402.)

Copyright ASME International
Provided by IHS under license with ASME
No reproduction or networking permitted without license from IHS

Not for Resale

Section 2 — Examples

2.1 INTRODUCTION

This section contains three examples of fluid flow measurement uncertainty analysis. The first (2.3) deals with airflow measurement for an entire facility (with several test stands) over a long period. It also applies to a single test with a single set of instruments. The same uncertainty model is used in the second example (2.4) for another single-stand process — the back-to-back comparative test. The second example demonstrates how back-to-back comparative tests can reduce the uncertainty of the first example. These examples will provide, step by step, the entire process of calculating the uncertainty of the airflow parameter. The first step is to understand the defined measurement process and then identify the source of every possible error. For each measurement, calibration errors will be discussed first, then data acquisition errors, data reduction errors, and finally, propagation of these errors to the calculated parameter. These two examples are presented in both SI units (Système International d'Unités) and English units. The third example (2.5) illustrates a liquid flow measurement. Engineering symbols are consistent with Fluid Meters, 6th ed. Statistical symbols are described in Appendix A and are consistent with ISO 3534, Statistics — Vocabulary and Symbols (1977).

2.2 GENERAL

Airflow measurements in gas turbine engine systems are generally made with one of three types of flowmeters: venturis, nozzles, and orifices. Selection of the specific type of flowmeter to use for a given application is contingent upon a trade off between measurement accuracy requirements, allowable pressure drop, and fabrication complexity over cost.

Flowmeters may be further classified into two categories: subsonic flow and critical flow. With a critical flowmeter, in which sonic velocity is maintained at the flowmeter throat, mass flow rate is a function only of the upstream gas properties. With a subsonic flowmeter, where the throat Mach number is less than sonic, mass flow rate is a function of both upstream and downstream gas properties.

Equations for the ideal mass flow rate through nozzles, venturis, and orifices are derived from the continuity equation:

$$m = \rho a V \tag{22}$$

In using the continuity equation as a basis for ideal flow equation derivations, it is normal practice to assume conservation of mass and energy and one-dimensional isentropic flow. Expressions for ideal flow will not yield the actual flow since actual conditions always deviate from ideal. An empirically determined correction factor, the discharge coefficient C, is used to adjust ideal to actual flow:

$$C = \frac{m_{\text{actual}}}{m_{\text{ideal}}} \tag{23}$$

Copyright ASME International
Provided by IHS under license with ASME
No reproduction or networking permitted without license from IHS
Not for Resale

2.3 EXAMPLE ONE – TEST FACILITY

2.3.1 Definition of the Measurement Process

What is the airflow measurement capability for a given industrial or government test facility? This question might relate to a guarantee in a product specification or a research contract. For example, what is the airflow measurement uncertainty for gas turbine engine testing at the U.S. Air Force's Arnold Engineering Development Center, or similarly, for the U.S. Naval Air Propulsion Test Center? Note that this question implies that many test stands, sets of instrumentation, and calibrations over a long period of time should be considered.

It is germane to ask, Does the uncertainty analysis for the entire facility (including many stands and many sets of instrumentation calibrations) apply to the problem of a single-strand, single-test, and single-instrument calibration within that facility? The answer is yes for two reasons. First, the distribution of errors for all the stands is comprised of errors from single stands. The second reason is that a single-standard method is proposed in this Standard to allow comparisons between test facilities, manufacturers, etc. (1.1). If specially tailored modifications are made to the uncertainty model, the subject becomes hopelessly complex and comparisons are meaningless.

2.3.2 Measurement Error Sources

Figure 12 depicts a critical venturi flowmeter installed in the inlet ducting upstream of a turbine engine under test.

When a venturi flowmeter is operated at critical pressure ratios, i.e., P_2/P_1 is a minimum, the flow rate through the venturi is a function of the upstream conditions only and may be calculated from

$$m = \frac{\pi d^2}{4} CF_a\phi^* \frac{P_1}{\sqrt{T_1}} \tag{24}$$

Each of the variables in Eq. (24) must be carefully considered to determine how and to what extent errors in the determination of the variable affect the calculated parameter. A relatively large error in some will affect the final answer very little, whereas small errors in others have a large effect. Particular care should be taken to identify measurements that influence the fluid flow parameter in more than one way. For this reason the Taylor series (Appendix B) should always be used to relate basic measurements to the final parameter.

In Eq. (24), upstream pressure and temperature (P_1 and T_1) are of primary concern. Error sources for each of these measurements are (1) calibration, (2) data acquisition, and (3) data reduction.

2.3.2.1 Pressure Measurement Errors

2.3.2.1.1 Pressure Calibration Errors. Figure 13 illustrates a typical calibration hierarchy. Associated with each comparison in the calibration hierarchy is a pair of elemental errors, a bias limit, and a precision index. Table 9 lists all of the elemental errors. Note that these elemental errors are not cumulative, e.g., B_{21} is not a function of B_{11}.

The bias limits should be based on interlaboratory tests if available. Otherwise, the judgment of the best experts must be used. The precision indices are calculated from calibration history data banks.

The precision index for the calibration process is the root-sum-square of the elemental precision indices, i.e.,

$$S_1 = \pm\sqrt{S_{11}{}^2 + S_{21}{}^2 + S_{31}{}^2 + S_{41}{}^2} \tag{25}$$

$$= \pm\sqrt{0.002^2 + 0.002^2 + 0.002^2 + 0.0053^2}$$

$$= \pm 0.0063 \text{ psi } (\textit{English})$$

$$= \pm\sqrt{13.787^2 + 13.787^2 + 13.787^2 + 36.541^2}$$

$$= \pm 43.65 \text{ Pa } (\textit{SI})$$

Copyright ASME International
Provided by IHS under license with ASME
No reproduction or networking permitted without license from IHS
Not for Resale

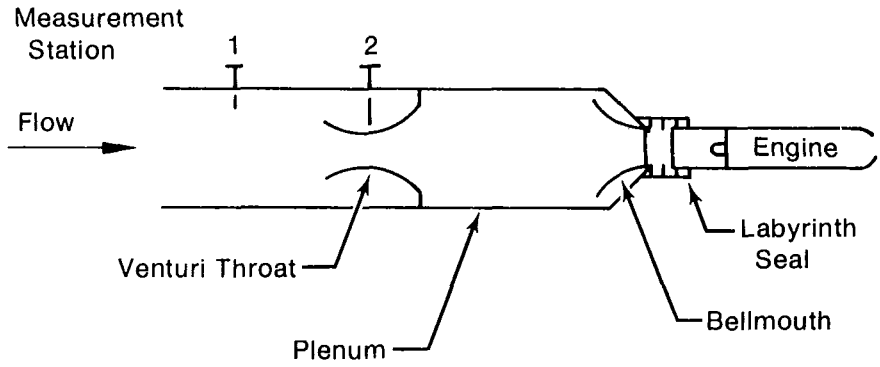

FIG. 12 SCHEMATIC OF CRITICAL VENTURI FLOWMETER INSTALLATION UPSTREAM OF A TURBINE ENGINE

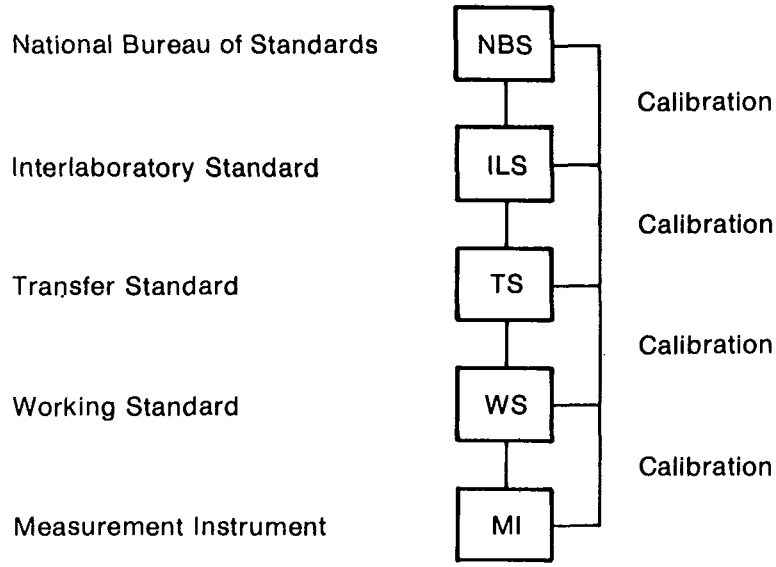

FIG. 13 TYPICAL CALIBRATION HIERARCHY

TABLE 9 CALIBRATION HIERARCHY ERROR SOURCES

Calibration	Bias Limit		Precision Index		Degrees of Freedom
	psi	Pa	psi	Pa	
NBS-ILS	$B_{11} = 0.01$	$B_{11} = 68.953$	$S_{11} = 0.002$	$S_{11} = 13.787$	$\nu_{11} = 10$
ILS-TS	$B_{21} = 0.01$	$B_{21} = 68.953$	$S_{21} = 0.002$	$S_{21} = 13.787$	$\nu_{21} = 15$
TS-WS	$B_{31} = 0.01$	$B_{31} = 68.953$	$S_{31} = 0.002$	$S_{31} = 13.787$	$\nu_{31} = 20$
WS-MI	$B_{41} = 0.018$	$B_{41} = 124.117$	$S_{41} = 0.0053$	$S_{41} = 36.541$	$\nu_{41} = 30$

Copyright ASME International
Provided by IHS under license with ASME
No reproduction or networking permitted without license from IHS

Not for Resale

Degrees of freedom associated with S_1 are calculated from the Welch-Satterthwaite formula as follows:

$$\nu_1 = \frac{(S_{11}{}^2 + S_{21}{}^2 + S_{31}{}^2 + S_{41}{}^2)^2}{\left(\frac{S_{11}{}^4}{\nu_{11}} + \frac{S_{21}{}^4}{\nu_{21}} + \frac{S_{31}{}^4}{\nu_{31}} + \frac{S_{41}{}^4}{\nu_{41}}\right)} \tag{26}$$

(*English*)

$$\nu_1 = \frac{(0.002^2 + 0.002^2 + 0.002^2 + 0.0053^2)^2}{\left(\frac{0.002^4}{10} + \frac{0.002^4}{15} + \frac{0.002^4}{20} + \frac{0.0053^4}{30}\right)} = 54$$

(*SI*)

$$\nu_1 = \frac{(13.787^2 + 13.787^2 + 13.787^2 + 36.541^2)^2}{\left(\frac{13.787^4}{10} + \frac{13.787^4}{15} + \frac{13.787^4}{20} + \frac{36.541^4}{30}\right)} = 54$$

The bias limit for the calibration process is the root-sum-square of the elemental bias limits, i.e.,

$$B_1 = \pm\sqrt{B_{11}{}^2 + B_{21}{}^2 + B_{31}{}^2 + B_{41}{}^2} \tag{27}$$

$$= \pm\sqrt{0.01^2 + 0.01^2 + 0.01^2 + 0.018^2}$$

$$= \pm 0.025 \text{ psi } (\textit{English})$$

$$= \pm\sqrt{68.953^2 + 68.953^2 + 68.953^2 + 124.117^2}$$

$$= \pm 172.2 \text{ Pa } (\textit{SI})$$

Uncertainty for the calibration process is now obtained by a simple combination of the precision index and bias limit.

As indicated in Fig. 14,

$$U_{1_{99}} = \pm(B_1 + t_{95}S_1) \qquad U_{1_{95}} = \pm\sqrt{B_1{}^2 + (t_{95}S_1)^2} \tag{28}$$

$$= \pm(0.025 + 2 \times 0.0063) \qquad = \pm\sqrt{(0.025)^2 + (2 \times 0.0063)^2}$$

$$= \pm 0.0376 \text{ psi } (\textit{English}) \qquad = \pm 0.028 \text{ psi } (\textit{English})$$

$$= \pm(172.246 + 2 \times 43.6519) \qquad = \pm\sqrt{(172.246)^2 + (2 \times 43.6519)^2}$$

$$= \pm 259.6 \text{ Pa } (\textit{SI}) \qquad = \pm 193.1 \text{ Pa } (\textit{SI})$$

Copyright ASME International
Provided by IHS under license with ASME
No reproduction or networking permitted without license from IHS
Not for Resale

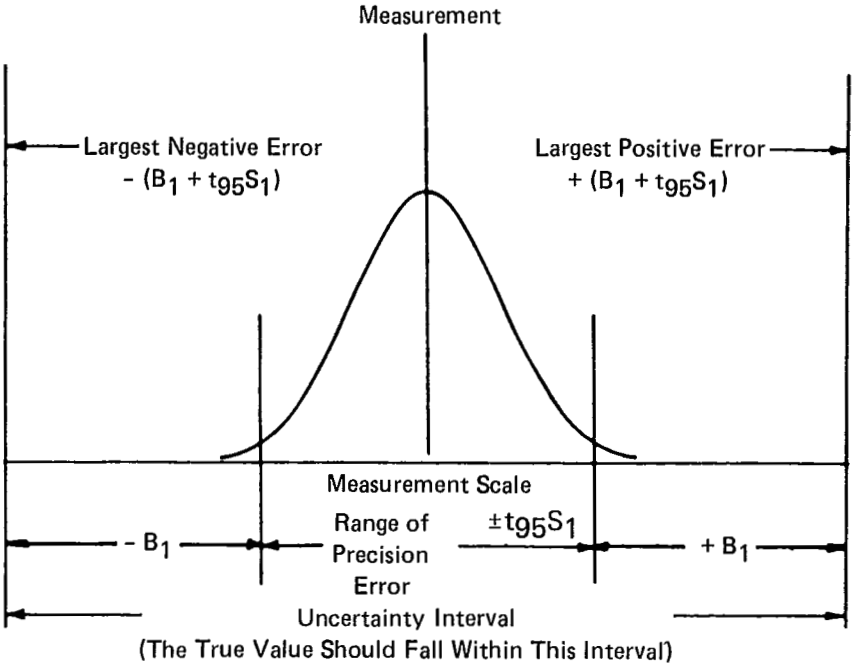

FIG. 14 CALIBRATION PROCESS UNCERTAINTY PARAMETER $U_1 = \pm(B_1 + t_{95}S)$

TABLE 10 PRESSURE TRANSDUCER DATA ACQUISITION ERROR SOURCES

Error Source	Bias Limit		Precision Index		Degrees of Freedom
	psi	Pa	psi	Pa	
Excitation Voltage	$B_{12} = 0.01$	$B_{12} = 68.953$	$S_{12} = \pm 0.005$	$S_{12} = \pm 34.481$	$\nu_{12} = 40$
Electrical Simulation	$B_{22} = 0.01$	$B_{22} = 68.953$	$S_{22} = \pm 0.005$	$S_{22} = \pm 34.481$	$\nu_{22} = 90$
Signal Conditioning	$B_{32} = 0.01$	$B_{32} = 68.953$	$S_{32} = \pm 0.005$	$S_{32} = \pm 34.481$	$\nu_{32} = 200$
Recording Device	$B_{42} = 0.01$	$B_{42} = 68.953$	$S_{42} = \pm 0.005$	$S_{42} = \pm 34.481$	$\nu_{42} = 10$
Pressure Transducer	$B_{52} = 0.01$	$B_{52} = 68.953$	$S_{52} = \pm 0.007$	$S_{52} = \pm 48.270$	$\nu_{52} = 100$
Environmental Effects	$B_{62} = 0.01$	$B_{62} = 68.953$	$S_{62} = \pm 0.01$	$S_{62} = \pm 68.953$	$\nu_{62} = 10$
Probe Errors	$B_{72} = 0.017$	$B_{72} = 117.223$	$S_{72} = \pm 0.007$	$S_{72} = \pm 48.270$	$\nu_{72} = 60$

2.3.2.1.2 Pressure Data Acquisition Errors. Data acquisition error sources for pressure measurement are listed in Table 10.

The precision index for the data acquisition process is

$$S_2 = \pm\sqrt{S_{12}^2 + S_{22}^2 + S_{32}^2 + S_{42}^2 + S_{52}^2 + S_{62}^2 + S_{72}^2} \qquad (29)$$

(*English*)

$$S_2 = \pm\sqrt{0.005^2 + 0.005^2 + 0.005^2 + 0.005^2 + 0.007^2 + 0.01^2 + 0.007^2}$$

$$= \pm 0.0173 \text{ psia}$$

Copyright ASME International
Provided by IHS under license with ASME
No reproduction or networking permitted without license from IHS
Not for Resale

(*SI*)

$$S_2 = \pm\sqrt{34.481^2 + 34.481^2 + 34.481^2 + 34.481^2 + 48.270^2 + 68.953^2 + 48.270^2}$$

$$= \pm 119.039 \text{ Pa}$$

$$\nu_2 = \frac{(S_{12}^2 + S_{22}^2 + S_{32}^2 + S_{42}^2 + S_{52}^2 + S_{62}^2 + S_{72}^2)^2}{\left(\frac{S_{12}^4}{\nu_{12}} + \frac{S_{22}^4}{\nu_{22}} + \frac{S_{32}^4}{\nu_{32}} + \frac{S_{42}^4}{\nu_{42}} + \frac{S_{52}^4}{\nu_{52}} + \frac{S_{62}^2}{\nu_{62}} + \frac{S_{72}^4}{\nu_{72}}\right)} \tag{30}$$

(*English*)

$$\nu_2 = \frac{(0.005^2 + 0.005^2 + 0.005^2 + 0.005^2 + 0.007^2 + 0.01^2 + 0.007^2)^2}{\left(\frac{0.005^4}{40} + \frac{0.005^4}{90} + \frac{0.005^4}{200} + \frac{0.005^4}{10} + \frac{0.007^4}{100} + \frac{0.01^4}{10} + \frac{0.007^4}{60}\right)} = 77$$

(*SI*)

$$\nu_2 = \frac{(34.481^2 + 34.481^2 + 34.481^2 + 34.481^2 + 48.270^2 + 68.953^2 + 48.270^2)^2}{\left(\frac{34.481^4}{40} + \frac{34.481^4}{90} + \frac{34.481^4}{200} + \frac{34.481^4}{10} + \frac{48.270^4}{100} + \frac{68.953^4}{10} + \frac{48.270^4}{60}\right)} = 77$$

The bias limit for the data acquisition process is

$$B_2 = \pm\sqrt{B_{12}^2 + B_{22}^2 + B_{32}^2 + B_{42}^2 + B_{52}^2 + B_{62}^2 + B_{72}^2} \tag{31}$$

(*English*)

$$B_2 = \pm\sqrt{0.01^2 + 0.01^2 + 0.01^2 + 0.01^2 + 0.01^2 + 0.01^2 + 0.017^2}$$

$$= \pm 0.03 \text{ psi}$$

(*SI*)

$$B_2 = \pm\sqrt{68.953^2 + 68.953^2 + 68.953^2 + 68.953^2 + 68.953^2 + 68.953^2 + 117.223^2}$$

$$= \pm 205.6 \text{ Pa}$$

$$U_{299} = \pm(B_2 + 2S_2) \qquad U_{295} = \pm\sqrt{B_2^2 + (t_{95}S_2)^2}$$

(*English*)

$$U_{299} = \pm(0.03 + 2 \times 0.0173)$$

$$= \pm 0.065 \text{ psi}$$

(*English*)

$$U_{295} = \pm\sqrt{(0.03)^2 + (2 \times 0.0173)^2}$$

$$= \pm 0.046 \text{ psi}$$

Copyright ASME International
Provided by IHS under license with ASME
No reproduction or networking permitted without license from IHS

Not for Resale

(*SI*)

$$U_{299} = \pm(205.593 + 2 \times 119.039)$$

$$= \pm 443.7 \text{ Pa}$$

(*SI*)

$$U_{295} = \pm\sqrt{(205.593)^2 + (2 \times 119.039)^2}$$

$$= \pm 314.6 \text{ Pa}$$

2.3.2.1.3 Pressure Data Reduction Errors. A computer operates on raw pressure measurement data to perform the conversion to engineering units. Errors in this process are called *data reduction errors* and stem from calibration curve fits and computer resolution.

Computer resolution is the source of a small elemental error. Some of the smallest computers used in experimental test applications have six-digit resolution. The resolution error is then ±1 in 10^6. Even though this error is probably negligible, consideration should be given to rounding-off and truncating errors. Rounding-off results in a precision error. Truncating *always* results in a bias (assumed in this example).

Table 11 lists data reduction error sources.

TABLE 11 PRESSURE MEASUREMENT DATA REDUCTION ERROR SOURCES

Error Source	Bias Limit		Precision Index	Degrees of Freedom
	psi	Pa		
Calibration Curve Fit	$B_{13} = \pm 0.01$	$B_{13} = \pm 68.953$	$S_{13} = 0$	ν_{13}
Computer Resolution	$B_{23} = \pm 0.001$	$B_{23} = \pm\ 6.894$	$S_{23} = 0$	ν_{23}

The precision index for the data reduction process is

$$S_3 = \pm\sqrt{S_{13}^{\ 2} + S_{23}^{\ 2}} \tag{32}$$

$$= 0.0 \text{ (}\textit{English and SI}\text{)}$$

The bias limit for the data reduction process is

$$B_3 = \pm\sqrt{B_{13}^{\ 2} + B_{23}^{\ 2}} \tag{33}$$

(*English*)

$$B_3 = \pm\sqrt{0.01^2 + 0.001^2}$$

$$= \pm 0.01 \text{ psi}$$

(*SI*)

$$B_3 = \pm\sqrt{68.953^2 + 6.894^2}$$

$$= \pm 69.297 \text{ Pa}$$

Copyright ASME International
Provided by IHS under license with ASME
No reproduction or networking permitted without license from IHS

Not for Resale

2.3.2.1.4 Pressure Measurement Error Summary. The precision index for pressure measurement then is

$$S_p = \pm\sqrt{S_{11}^2 + S_{21}^2 + S_{31}^2 + S_{41}^2 + S_{12}^2 + S_{22}^2 + S_{32}^2 + S_{42}^2 + S_{52}^2 + S_{62}^2 + S_{72}^2 + S_{13}^2 + S_{23}^2} \tag{34}$$

or

$$S_p = \pm\sqrt{S_1^2 + S_2^2 + S_3^2}$$

(*English*)

$$= \pm\sqrt{0.0063^2 + 0.0173^2 + 0^2}$$

$$= \pm 0.018 \text{ psi}$$

(*SI*)

$$= \pm\sqrt{43.6519^2 + 119.039^2 + 0.0^2}$$

$$= \pm 126.790 \text{ Pa}$$

Degrees of freedom associated with the precision index are determined as follows:

$$\nu_p = \frac{(S_{11}^2 + S_{21}^2 + S_{31}^2 + S_{41}^2 + S_{12}^2 + S_{22}^2 + S_{32}^2 + S_{42}^2 + S_{52}^2 + S_{62}^2 + S_{72}^2 + S_{13}^2 + S_{23}^2)^2}{\left(\frac{S_{11}^4}{\nu_{11}} + \frac{S_{21}^4}{\nu_{21}} + \frac{S_{31}^4}{\nu_{31}} + \frac{S_{41}^4}{\nu_{41}} + \frac{S_{12}^4}{\nu_{12}} + \frac{S_{22}^4}{\nu_{22}} + \frac{S_{32}^4}{\nu_{32}} + \frac{S_{42}^4}{\nu_{42}} + \frac{S_{52}^4}{\nu_{52}} + \frac{S_{62}^4}{\nu_{62}} + \frac{S_{72}^4}{\nu_{72}} + \frac{S_{13}^4}{\nu_{13}} + \frac{S_{23}^4}{\nu_{23}}\right)} \tag{35}$$

or

$$\nu_p = \frac{(S_1^2 + S_2^2 + S_3^2)^2}{\left(\frac{S_1^4}{\nu_1} + \frac{S_2^4}{\nu_2} + \frac{S_3^4}{\nu_3}\right)} \tag{36}$$

(*English*)

$$\nu_p = \frac{(0.0063^2 + 0.0173^2 + 0.0^2)^2}{\left(\frac{0.0063^4}{54} + \frac{0.0173^4}{77} + \frac{0.0^4}{0}\right)}$$

$$= 96 \therefore t_{95} = 2$$

Copyright ASME International
Provided by IHS under license with ASME
No reproduction or networking permitted without license from IHS
Not for Resale

(*SI*)

$$\nu_p = \frac{(43.6519^2 + 119.039^2 + 0.0^2)^2}{\left(\frac{43.6519^2}{54} + \frac{119.039^2}{77} + \frac{0.0^4}{0}\right)}$$

$$= 96 \therefore t_{95} = 2$$

The bias limit for the pressure measurement is

$$B_p = \pm\sqrt{B_{11}^2 + B_{21}^2 + B_{31}^2 + B_{41}^2 + B_{12}^2 + B_{22}^2 + B_{32}^2 + B_{42}^2 + B_{52}^2 + B_{62}^2 + B_{72}^2 + B_{13}^2 + B_{23}^2} \quad (37)$$

or

$$B_p = \pm\sqrt{B_1^2 + B_2^2 + B_3^2} \quad (38)$$

(*English*)

$$B_p = \pm\sqrt{0.025^2 + 0.03^2 + 0.01^2}$$

$$= \pm 0.04 \text{ psi}$$

(*SI*)

$$B_p = \pm\sqrt{172.246^2 + 205.593^2 + 69.297^2}$$

$$= \pm 277.018 \text{ Pa}$$

Uncertainty for the pressure measurement is

$$U_{p99} = \pm(B_p + t_{95}S_p) \qquad U_{p95} = \pm\sqrt{B_p^2 + (t_{95}S_p)^2} \quad (39)$$

(*English*)

$$U_{p99} = \pm(0.04 + 2 \times 0.018)$$

$$= \pm 0.08 \text{ psi}$$

(*English*)

$$U_{p95} = \pm\sqrt{(0.04)^2 + (2 \times 0.018)^2}$$

$$= \pm 0.05 \text{ psi}$$

(*SI*)

$$U_{p99} = \pm(277.018 + 2 \times 126.790)$$

$$= \pm 530.6 \text{ Pa}$$

(*SI*)

$$U_{p95} = \pm\sqrt{(277.018)^2 + (2 \times 126.79)^2}$$

$$= \pm 375.6 \text{ Pa}$$

Copyright ASME International
Provided by IHS under license with ASME
No reproduction or networking permitted without license from IHS

Not for Resale

More detailed treatment of pressure measurement considerations and calibration techniques that will minimize errors and simplify determination of the uncertainty parameter may be found in Handbook: Uncertainty in Gas Turbine Measurements, USAF AEDC-TR-73-5.

2.3.2.2 Temperature Measurement Errors

2.3.2.2.1 Temperature Calibration Errors. The calibration hierarchy for temperature measurements is similar to that for pressure measurements. Figure 15 depicts a typical temperature measurement hierarchy. As in the pressure calibration hierarchy, each comparison in the temperature calibration hierarchy produces elemental bias and precision errors. Table 12 lists temperature calibration hierarchy elemental errors.

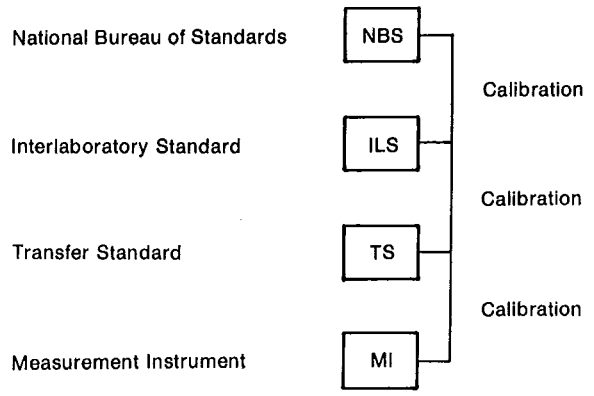

FIG. 15 TEMPERATURE MEASUREMENT CALIBRATION HIERARCHY

TABLE 12 TEMPERATURE CALIBRATION HIERARCHY ELEMENTAL ERRORS

Calibration	Bias Limit		Precision Index		Degrees of Freedom
	°R	K	°R	K	
NBS–ILS	$B_{11} = \pm 0.1$	$B_{11} = \pm 0.056$	$S_{11} = \pm 0.003$	$S_{11} = \pm 0.002$	$\nu_{11} = 2$
ILS–TS	$B_{21} = \pm 0.5$	$B_{21} = \pm 0.278$	$S_{21} = \pm 0.05$	$S_{21} = \pm 0.028$	$\nu_{21} = 10$
TS–WS	$B_{31} = \pm 0.6$	$B_{31} = \pm 0.333$	$S_{31} = \pm 0.05$	$S_{31} = \pm 0.028$	$\nu_{31} = 15$
WS–MI	$B_{41} = \pm 0.68$	$B_{41} = \pm 0.378$	$S_{41} = \pm 0.07$	$S_{41} = \pm 0.039$	$\nu_{41} = 30$

The calibration hierarchy precision index is calculated as

$$S_1 = \pm\sqrt{S_{11}^2 + S_{21}^2 + S_{31}^2 + S_{41}^2} \tag{40}$$

(*English*)

$$S_1 = \pm\sqrt{0.003^2 + 0.05^2 + 0.05^2 + 0.07^2}$$

$$= \pm 0.1°\text{R}$$

Copyright ASME International
Provided by IHS under license with ASME
No reproduction or networking permitted without license from IHS
Not for Resale

(*SI*)

$$S_1 = \pm\sqrt{0.002^2 + 0.028^2 + 0.028^2 + 0.039^2}$$

$$= \pm 0.056 \text{ K}$$

Degrees of freedom associated with S_1 are

$$\nu_1 = \frac{(S_{11}{}^2 + S_{21}{}^2 + S_{31}{}^2 + S_{41}{}^2)^2}{\left(\frac{S_{11}{}^4}{\nu_{11}} + \frac{S_{21}{}^4}{\nu_{21}} + \frac{S_{31}{}^4}{\nu_{31}} + \frac{S_{41}{}^4}{\nu_{41}}\right)} \tag{41}$$

(*English*)

$$\nu_1 = \frac{(0.003^2 + 0.05^2 + 0.05^2 + 0.07^2)^2}{\left(\frac{0.003^4}{2} + \frac{0.05^4}{10} + \frac{0.05^4}{15} + \frac{0.07^4}{30}\right)}$$

$$= 53 > 30, \therefore t_{95} = 2$$

(*SI*)

$$\nu_1 = \frac{(0.002^2 + 0.028^2 + 0.028^2 + 0.039^2)^2}{\left(\frac{0.002^4}{2} + \frac{0.028^4}{10} + \frac{0.028^4}{15} + \frac{0.039^4}{30}\right)}$$

$$= 53$$

The calibration hierarchy bias limit is

$$B_1 = \pm\sqrt{B_{11}{}^2 + B_{21}{}^2 + B_{31}{}^2 + B_{41}{}^2} \tag{42}$$

(*English*)

$$B_1 = \pm\sqrt{0.1^2 + 0.5^2 + 0.6^2 + 0.68^2}$$

$$= \pm 1.04^\circ\text{R}$$

(*SI*)

$$B_1 = \pm\sqrt{0.056^2 + 0.278^2 + 0.333^2 + 0.378^2}$$

$$= \pm 0.578 \text{ K}$$

Copyright ASME International
Provided by IHS under license with ASME
No reproduction or networking permitted without license from IHS
Not for Resale

Uncertainty of the temperature calibration hierarchy is

$$U_{99} = \pm(B_1 + t_{95}S_1) \qquad U_{95} = \pm\sqrt{(B_1)^2 + (t_{95}S_1)^2} \tag{43}$$

(English)

$= \pm(1.04 + 2 \times 0.1)$

$= \pm 1.24°R$

(English)

$= \pm\sqrt{(1.04)^2 + (2 \times 0.1)^2}$

$= \pm 1.06°R$

(SI)

$U_{99} = \pm(0.578 + 2 \times 0.056)$

$= \pm 0.69$ K

(SI)

$U_{95} = \pm\sqrt{(0.578)^2 + (2 \times 0.056)^2}$

$= \pm 0.59$ K

2.3.2.2.2 Temperature Data Acquisition and Reduction Errors. A reference temperature monitoring system will provide an excellent source of data for evaluating both data acquisition and reduction temperature precision errors.

Figure 16 depicts a typical setup for measuring temperatures with Chromel-Alumel thermocouples.

If several calibrated thermocouples are utilized to monitor the temperature of an ice point bath, statistically useful data can be recorded each time test data are recorded. Assuming that those thermocouple data are recorded and reduced to engineering units by processes identical to those employed for test temperature measurements, a stockpile of data will be gathered from which data acquisition and reduction errors may be estimated.

For the purpose of illustration, suppose N calibrated Chromel-Alumel thermocouples are employed to monitor the ice bath temperature of a temperature measuring system similar to that depicted by Fig. 16. If

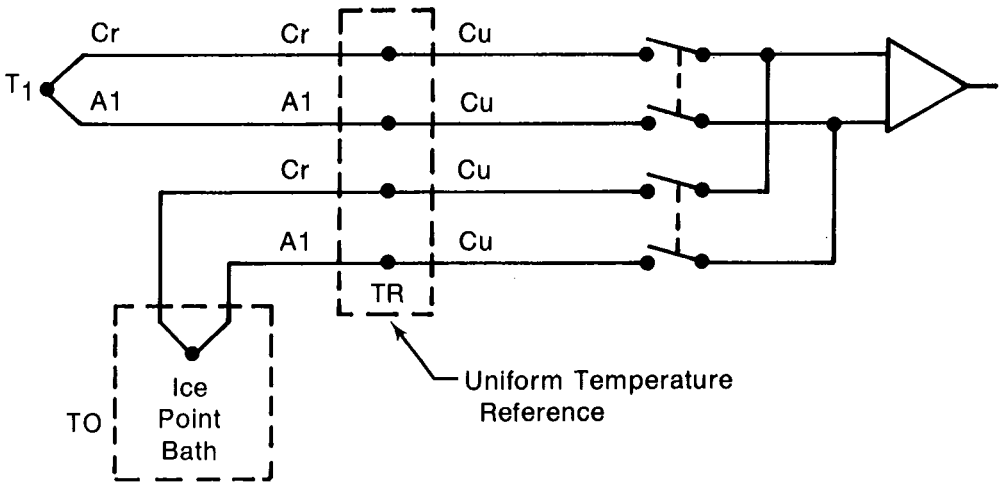

FIG. 16 TYPICAL THERMOCOUPLE CHANNEL

Copyright ASME International
Provided by IHS under license with ASME
No reproduction or networking permitted without license from IHS
Not for Resale

each time test data are recorded, multiple scan recordings are made for each of the thermocouples, and if a multiple scan average X_{ij} is calculated for each thermocouple, then the average $\bar{X}_j$ for all recordings of the jth thermocouple is

$$\bar{X}_j = \frac{\sum_{i=1}^{K_j} X_{ij}}{K_j} \tag{44}$$

where K_j is the number of multiple scan recordings for the jth thermocouple.

The grand average $\bar{X}$ is computed for all monitor thermocouples as

$$\bar{X} = \frac{\sum_{j=1}^{N} \bar{X}_j}{N} \tag{45}$$

The precision index $S_{\bar{X}}$ for the data acquisition and reduction processes is then

$$S_{\bar{X}} = \pm \sqrt{\frac{\sum_{j=1}^{N} \sum_{i=1}^{K_j} (X_{ij} - \bar{X}_j)^2}{\sum_{j=1}^{N} (K_j - 1)}} \tag{46}$$

$$= \pm 0.17^\circ\text{R} \ (\textit{English})$$

$$= \pm 0.094 \text{ K} \ (\textit{SI}) \text{ (assumed for this example)}$$

The degrees of freedom associated with $S_{\bar{X}}$ are

$$\nu_{\bar{X}} = \sum_{i=1}^{N} (K_j - 1) \tag{47}$$

$$= 200 \text{ (assumed for this example)}$$

Data acquisition and reduction bias limits may be evaluated from the same ice bath temperature data if the temperature of the ice bath is continuously measured with a working standard such as a calibrated mercury-in-glass thermometer. There the bias limit is the largest observed difference between $\bar{X}$ and the temperature indicated by the working standard acquisition and reduction process. In this example it is assumed to be $\pm 1.0^\circ$R, 0.56 K, i.e.,

$$B_{\bar{X}} = \pm 1.0^\circ\text{R} \ (\textit{English}) \tag{48}$$

$$= \pm 0.56 \text{ K} \ (\textit{SI})$$

Copyright ASME International
Provided by IHS under license with ASME
No reproduction or networking permitted without license from IHS
Not for Resale

(*a*) Error sources accounted for by this method are:
(*1*) ice point bath reference precision error
(*2*) reference block temperature precision error
(*3*) recording system resolution error
(*4*) recording system electrical noise error
(*5*) analog-to-digital conversion error
(*6*) Chromel-Alumel thermocouple millivolt output vs temperature curve-fit error
(*7*) computer resolution error.

(*b*) Several errors which are not included in the monitoring system statistics are:
(*1*) conduction error (B_C)
(*2*) radiation error (B_R)
(*3*) recovery error (B_Y)
(*4*) calibration error (B_1).

These errors are a function of probe design and environmental conditions. Detailed treatment of these error sources is beyond the scope of this work. Several good references which should provide the background required to complete an error analysis are listed below.

Haig, L. B. A Design Procedure for Thermocouple Probes. SAE Preprint 158C. Engineering Development Dept., Research Laboratories, General Motors Corp., Warren, Mich. Presented at the SAE National Aeronautic Meeting, Hotel Commodore, New York, NY. April 5-8, 1960.

National Advisory Committee for Aeronautics. Jan. 1952. Technical Note 2599. Experimental Determination of Time Constants and Nusselt Numbers for Bare-Wire Thermocouples in High-Velocity Air Streams and Analytic Approximation of Conduction and Radiation Errors. Scadron, M. D., and Warshawsky, I. Lewis Flight Propulsion Laboratory, Cleveland, Ohio.

National Advisory Committee for Aeronautics. Sept. 1954. Research Memorandum E54G22a. Recovery Corrections for Butt-Welded, Straight-Wire Thermocouples in High-Velocity, High-Temperature Gas Streams. Simmons, F. S.

National Advisory Committee for Aeronautics. Oct. 1956. Technical Note 3766. Radiation and Recovery Corrections and Time Constants of Several Chromel-Alumel Thermocouples Probes in High-Temperature, High-Velocity Gas Streams. Glawe, G. E., Simmons, F. S., and Stickney, T. M. Lewis Flight Propulsion Laboratory, Cleveland, Ohio.

National Advisory Committee for Aeronautics. Dec. 1950. Research Memorandum E50129. Performance of Three High-Recovery-Factor Thermocouple Probes for Room-Temperature Operation. Scadron, M. D., Gettelman, C. C., and Pock, G. J.

U.S. Dept. of the Air Force. Arnold Engineering Development Center. April 1971. AEDC-TR-71-68. Recovery Characteristics of a Single-Shielded Self-Aspirating Thermocouple Probe at Low Pressure Levels and Subsonic Speeds. Willbanks, C. E.

2.3.2.2.3 Temperature Measurement Error Summary. The precision index for temperature measurements in this example is

$$S_T = \pm\sqrt{S_1{}^2 + S_{\bar{X}}{}^2} \tag{49}$$

(*English*)

$$S_T = \pm\sqrt{0.1^2 + 0.17^2}$$

$$= \pm 0.2°\text{R}$$

(*SI*)

$$S_T = \pm\sqrt{0.056^2 + 0.094^2}$$

$$= \pm 0.11\ \text{K}$$

Copyright ASME International
Provided by IHS under license with ASME
No reproduction or networking permitted without license from IHS
Not for Resale

where

S_1 = calibration hierarchy precision index
$S_{\bar{X}}$ = data acquisition and reduction precision index.

The degrees of freedom associated with S_T are

$$\nu_T = \frac{(S_1{}^2 + S_{\bar{X}}{}^2)^2}{\left(\frac{S_1{}^4}{\nu_1} + \frac{S_2{}^4}{\nu_2}\right)} \tag{50}$$

(*English*)

$$\nu_T = \frac{(0.1^2 + 0.17^2)^2}{\left(\frac{0.1^4}{53} + \frac{0.17^4}{200}\right)}$$

$$= 250 \therefore t_{95} = 2$$

(*SI*)

$$\nu_T = \frac{(0.056^2 + 0.094^2)^2}{\left(\frac{0.056^4}{53} + \frac{0.094^4}{200}\right)}$$

$$= 250 \therefore t_{95} = 2$$

Bias limits for the measurements are

$$B_T = \pm\sqrt{B_1{}^2 + B_{\bar{X}}{}^2 + B_C{}^2 + B_R{}^2 + B_Y{}^2} \tag{51}$$

where

B_1 = calibration hierarchy bias limits
$B_{\bar{X}}$ = data acquisition and reduction bias limits
B_C = conduction error bias limits (negligible in this example)
B_R = radiation error bias limits (negligible in this example)
B_Y = recovery factor bias limits (negligible in this example)

(*English*)

$$B_T = \pm\sqrt{1.04^2 + 1.0^2}$$

$$= \pm 1.44°\text{R}$$

Copyright ASME International
Provided by IHS under license with ASME
No reproduction or networking permitted without license from IHS
Not for Resale

(*SI*)

$$B_T = \pm\sqrt{0.578^2 + 0.56^2}$$

$$= \pm 0.804 \text{ K}$$

Uncertainty for the temperature measurement is

$$U_{T_{99}} = \pm(B_T + t_{95}S_T) \qquad U_{T_{95}} = \pm\sqrt{B_T{}^2 + (t_{95}S_T)^2} \tag{52}$$

(*English*)

$$U_{T_{99}} = \pm(1.44 + 2 \times 0.2)$$

$$= \pm 1.84°\text{R}$$

(*English*)

$$U_{T_{95}} = \pm\sqrt{(1.44)^2 + (2 \times 0.2)^2}$$

$$= \pm 1.49°\text{R}$$

(*SI*)

$$U_{T_{99}} = \pm(0.804 + 2 \times 0.11)$$

$$= \pm 1.02 \text{ K}$$

(*SI*)

$$U_{T_{95}} = \pm\sqrt{(0.804)^2 + (2 \times 0.11)^2}$$

$$= \pm 0.83 \text{ K}$$

When ν is less than 30, t_{95} is determined from a Student's t table at the value of ν_T. Since here ν_T is greater than 30, use $t_{95} = 2$.

NOTE: Reference is again made to Handbook: Uncertainty in Gas Turbine Measurements, USAF AEDC-TR-73-5 for detailed treatment of temperature measurement and calibration techniques designed to minimize errors and simplify evaluation of the uncertainty parameter.

2.3.2.3 Discharge Coefficient Error. The ASME has cataloged discharge coefficients for a variety of venturis, nozzles, and orifices. Cataloged values are the result of an extremely large number of actual calibrations over a period of many years. The results of this experimental work are documented in the ASME publication entitled Fluid Meters, 6th ed. Discharge coefficients cataloged therein are applicable to all flowmeters that conform to this specification. Detailed engineering comparisons must be exercised to ensure that the flowmeter conforms to one of the groups tested before using the tabulated values for discharge coefficients and error tolerances.

To minimize the uncertainty in the discharge coefficient, it should be calibrated using primary standards in a recognized laboratory. Such a calibration will determine a value for $A_{\text{eff}} = Ca$ and the associated bias limit and precision index.

When an independent flowmeter is used to determine flow rates during a calibration for C, dimensional errors are effectively calibrated out. However, when C is calculated or taken from Fluid Meters, 6th ed., errors in the measurement of pipe and throat diameters will be reflected as bias errors in the flow measurement.

Dimensional errors in large venturis, nozzles, and orifices may be negligible. For example, an error of 0.001 in. in the throat diameter of a 5 in. critical flow nozzle will result in 0.04% bias in airflow. However, these errors can be significant at large diameter ratios.

2.3.2.4 Nonideal Gas Behavior and Variation in Gas Composition. Nonideal gas behavior and changes in gas composition are accounted for by selection of the proper values for compressibility factor Z, molecular weight M, and ratio of specific heats γ for the specific gas flow being measured.

Copyright ASME International
Provided by IHS under license with ASME
No reproduction or networking permitted without license from IHS

Not for Resale

When values of γ and Z are evaluated at the proper pressure and temperature conditions, airflow errors resulting from errors in γ and Z will be negligible.

For the specific case of airflow measurement, the main factor contributing to variation of composition is the moisture content of the air. Though small, the effect of a change in air density due to water vapor on airflow measurement should be evaluated in every measurement process.

2.3.2.5 Thermal Expansion Correction Factor Error. The thermal expansion correction factor F_a corrects for changes in throat area caused by changes in flowmeter temperature.

For steels, a 30°F flowmeter temperature difference between the time of a test and the time of calibration will introduce an airflow error of 0.06% if no correction is made. If flowmeter skin temperature is determined to within ±5°F and the correction factor is applied, the resulting error in airflow will be negligible.

2.3.3 Propagation of Error to Airflow

For an example of propagation of errors in airflow measurement using a critical-flow venturi, consider a venturi (designed according to criteria presented by Smith, R. E., Jr., and Matz, R. J. 1962. A Theoretical Method of Determining Discharge Coefficients for Venturis Operating at Critical Flow Conditions. Transactions of the ASME – Journal of Basic Engineering 84, Series D:434-446) having a throat diameter of 21.81 in. (0.554 m) and operating with dry air at an upstream total pressure of 12.78 psia (88 126 Pa) and an upstream total temperature of 478.7°R (265.9 K). Equation 53 is the flow equation to be analyzed:

$$m = \frac{\pi d^2}{4} C F_a \phi^* \frac{P_1}{\sqrt{T_1}} \tag{53}$$

$$\phi^* = \sqrt{\left(\frac{2}{\gamma + 1}\right)^{(\gamma+1)/(\gamma-1)} \left(\frac{\gamma g M}{Z R}\right)}$$

For this example, assume that the theoretical discharge coefficient C has been determined to be 0.995 using the procedures outlined by Smith and Matz. Further assume that the thermal expansion correction factor F_a and the compressibility factor Z are equal to 1.0. Table 13 lists nominal values, bias limits, precision indices, and degrees of freedom for each error source in the above equation in both English and SI units. (To illustrate the uncertainty methodology we will assume a precision index of ±0.0005 in addition to a bias of ±0.003.)

Note that in Table 13 airflow errors resulting from errors in F_a, Z, k, g, M, and R are considered negligible.

From Eq. (53), airflow is calculated as

(English)

$$m = \frac{3.142}{4} (21.81)^2 \times 0.995$$

$$\times 1.0 \sqrt{\left(\frac{2}{2.401}\right)^{2.401/0.401} \left(\frac{1.401 \times 28.95 \times 32.174}{1545}\right)} \times \frac{12.78}{\sqrt{478.7}}$$

$$= 115.5 \text{ lb}_m/\text{sec}$$

Copyright ASME International
Provided by IHS under license with ASME
No reproduction or networking permitted without license from IHS

Not for Resale

TABLE 13 AIRFLOW MEASUREMENT ERROR SOURCES

Error Source	Nominal Value		Bias Limit		Precision Index		Degrees of Freedom	Uncertainty	
	English	*SI*	*English*	*SI*	*English*	*SI*	ν	*English*	*SI*
P_1	12.78 psi	88 126 Pa	±0.04 psi	±277.02 Pa	±0.018 psi	±126.79 Pa	96	±0.08 psi	±530.60 Pa
T_1	478.7°R	265.9 K	±1.44°R	±0.8 K	±0.20°R	±0.11 K	250	±1.84°R	±1.02 K
d	21.81 in.	0.554 m	±0.001 in.	$\pm 2.54 \times 10^{-5}$m	±0.001 in.	$\pm 2.54 \times 10^{-5}$m	100	±0.003 in.	$\pm 7.62 \times 10^{-5}$m
C	0.995	0.995	±0.003	±0.003	±0.0005	±0.0005	...	±0.003	±0.003
F_a	1.0	1.0	...	...	...	...	...	...	...
Z	1.0	1.0	...	...	...	...	...	...	...
γ	1.401	1.401	...	...	...	...	...	...	...
g	$32.174 \frac{lb_m\text{-ft}}{lb_f\text{-sec}^2}$	...	...	...	...	...	...	...	...
M	28.95 lb_m /lb_m-mole	$28.95 \frac{kg}{kg\text{-mole}}$	...	...	...	...	...	...	...
R	$1545 \frac{lb_f\text{-ft}}{lb_m\text{-mole-°R}}$	$8.314 \frac{J}{kg\text{-mole-K}}$	...	...	...	...	...	...	...

Copyright ASME International
Provided by IHS under license with ASME
No reproduction or networking permitted without license from IHS
Not for Resale

(*SI*)

$$m = \frac{3.142}{4} (0.554)^2 \times 0.995 \times 1.0 \sqrt{\left(\frac{2}{2.401}\right)^{2.401/0.401} \left(\frac{1.401 \times 28.95}{8314}\right)} \times \frac{88\,126}{\sqrt{265.9}}$$

$$= 52.39 \text{ kg/s}$$

Taylor series (Appendix B) expansion of Eq. (53) with the assumptions indicated yields Eqs. (54) and (55), from which the flow measurement precision index and bias limit are calculated.

$$S_m = \pm m \sqrt{\left(\frac{S_{P_1}}{P_1}\right)^2 + \left(\frac{-S_{T_1}}{2T_1}\right)^2 + \left(\frac{S_C}{C}\right)^2 + \left(\frac{2S_d}{d}\right)^2} \tag{54}$$

(*English*)

$$S_m = \pm 115.5 \sqrt{\left(\frac{0.018}{12.78}\right)^2 + \left(\frac{-0.20}{2 \times 478.7}\right)^2 + \left(\frac{0.0005}{0.995}\right)^2 + \left(\frac{2 \times 0.001}{21.8}\right)^2}$$

$$= \pm 115.5 \sqrt{(0.0014)^2 + (-0.0002)^2 + (0.000503)^2 + (0.00009)^2}$$

$$= \pm 0.175 \text{ lb}_m/\text{sec}$$

(*SI*)

$$S_m = \pm 52.39 \sqrt{\left(\frac{126.790}{88\,126}\right)^2 + \left(\frac{-0.11}{2 \times 265.9}\right)^2 + \left(\frac{0.0005}{0.995}\right)^2 + \left(\frac{2 \times 0.000025}{0.554}\right)^2}$$

$$= \pm 52.39 \sqrt{(0.0014)^2 + (-0.0002)^2 + (0.000503)^2 + (0.00009)^2}$$

$$= \pm 0.0787 \text{ kg/s}$$

$$B_m = \pm m \sqrt{\left(\frac{B_{P_1}}{P_1}\right)^2 + \left(\frac{-B_{T_1}}{2T_1}\right)^2 + \left(\frac{B_C}{C}\right)^2 + \left(\frac{2B_d}{d}\right)^2} \tag{55}$$

(*English*)

$$B_m = \pm 115.5 \sqrt{\left(\frac{0.04}{12.78}\right)^2 + \left(\frac{-1.44}{957.4}\right)^2 + \left(\frac{0.003}{0.995}\right)^2 + \left(\frac{0.002}{21.81}\right)^2}$$

$$B_m = \pm 115.5 \sqrt{(0.0031)^2 + (-0.0015)^2 + (0.0030)^2 + (0.00009)^2}$$

$$= \pm 0.53 \text{ lb}_m/\text{sec}$$

Copyright ASME International
Provided by IHS under license with ASME
No reproduction or networking permitted without license from IHS
Not for Resale

(*SI*)

$$B_m = \pm 52.39 \sqrt{\left(\frac{277.02}{88\,126}\right)^2 + \left(\frac{-0.804}{531.8}\right)^2 + \left(\frac{0.003}{0.995}\right)^2 + \left(\frac{0.00005}{0.554}\right)^2}$$

$$= \pm 52.39 \sqrt{(0.0031)^2 + (-0.0015)^2 + (0.0030)^2 + (0.00009)^2}$$

$$= \pm 0.2416 \text{ kg/s}$$

By using the Welch-Satterthwaite formula, the degrees of freedom for the combined precision index is determined from

$$\nu_m = \frac{\left[\left(\frac{\partial m}{\partial P_1} S_{P_1}\right)^2 + \left(\frac{\partial m}{\partial T_1} S_{T_1}\right)^2 + \left(\frac{\partial m}{\partial d} S_d\right)^2 + \left(\frac{\partial m}{\partial C} S_C\right)^2\right]^2}{\frac{\left(\frac{\partial m}{\partial P_1} S_{P_1}\right)^4}{\nu_{P_1}} + \frac{\left(\frac{\partial m}{\partial T_1} S_{T_1}\right)^4}{\nu_{T_1}} + \frac{\left(\frac{\partial m}{\partial d} S_d\right)^4}{\nu_d} + \frac{\left(\frac{\partial m}{\partial C} S_C\right)^4}{\nu_C}} \tag{56}$$

$$= \frac{\left[\left(\frac{S_{P_1}}{P_1}\right)^2 + \left(\frac{-S_{T_1}}{2T_1}\right)^2 + \left(\frac{2S_d}{d}\right)^2 + \left(\frac{S_C}{C}\right)^2\right]^2}{\frac{\left(\frac{S_{P_1}}{P_1}\right)^4}{\nu_{P_1}} + \frac{\left(\frac{-S_{T_1}}{2T_1}\right)^4}{\nu_{T_1}} + \frac{\left(\frac{2S_d}{d}\right)^4}{\nu_d} + \frac{\left(\frac{S_C}{C}\right)^4}{\nu_C}} \tag{57}$$

which results in an overall degrees of freedom >30, and therefore a value for t_{95} of 2.0.

Total airflow uncertainty is then

$$U_{m_{99}} = \pm(B_m + t_{95} S_m) \qquad U_{m_{95}} = \pm\sqrt{B_m{}^2 + (t_{95} S_m)^2} \tag{58}$$

(*English*)

$U_{m_{99}} = \pm[0.53 + 2(0.175)]$

$= \pm 0.88 \text{ lb}_m/\text{sec}$

$= \pm 0.8\%$

(*English*)

$U_{m_{95}} = \pm\sqrt{(0.53)^2 + (2 \times 0.175)^2}$

$= \pm 0.64 \text{ lb}_m/\text{sec}$

$= \pm 0.55\%$

(*SI*)

$U_{m_{99}} = \pm[0.2416 + 2 \times 0.0787]$

$= \pm 0.40 \text{ kg/s}$

$= \pm 0.8\%$

(*SI*)

$U_{m_{95}} = \pm\sqrt{(0.2416)^2 + (2 \times 0.0787)^2}$

$= \pm 0.29 \text{ kg/s}$

$= \pm 0.55\%$

Copyright ASME International
Provided by IHS under license with ASME
No reproduction or networking permitted without license from IHS
Not for Resale

2.4 EXAMPLE TWO – BACK-TO-BACK COMPARATIVE TEST

2.4.1 Definition of the Measurement Process

The objective of a back-to-back test is to determine the net effect of a design change, such as a new part, most accurately, i.e., with the smallest measurement uncertainty. The first test is to run with the standard or baseline configuration. The second test is identical to the first except that the design change is substituted in the baseline configuration. The difference between the results of the two tests is an indication of the effect of the design change.

As long as we consider only the difference or net effect between the two tests, all the fixed, constant bias errors will cancel out. The measurement uncertainty is composed of precision errors only.

For example, assume we are testing the effect on the gas flow of a centrifugal compressor from a change to the inlet inducer. At constant inlet and discharge conditions and constant rotational speed, will the gas flow increase? If we test the compressor with the old and new inducers and take the difference in measured airflow as our defined measurement process, we obtain the smallest uncertainty. All the bias errors cancel. Note that although the back-to-back test provides an accurate net effect, the absolute value (gas flow with the new inducer) is not determined; or if calculated, as in example two, it will be inflated by the bias errors. Also, the small uncertainty of the back-to-back test can be significantly reduced by repeating it several times.

2.4.2 Measurement Error Sources

All errors result from precision errors in data acquisition and data reduction. Bias errors are effectively zero. Precision error values are identical to those in example one (2.3), except that calibration precision errors become biases and, hence, effectively zero.

2.4.2.1 Calibration Errors. Back-to-back tests must use the same test facility and instrumentation for each test. All calibration errors are biases and cancel out in taking the difference between the test results.

$$B_1 = 0$$

and

$$S_1 = 0$$

$$Sc = 0$$

2.4.2.2 Precision Errors

$$S_p = S_2 \qquad \text{[See Eq. (29)]}$$

$$= \pm 0.0173 \text{ psi } (\textit{English})$$

$$= \pm 119.039 \text{ Pa } (\textit{SI})$$

$$\nu_p = \nu_2 = 77 \ (\textit{English and SI}) \qquad \text{[See Eq. (30)]}$$

$$S_T = S_{\bar{X}} \qquad \text{[See Eq. (46)]}$$

Copyright ASME International
Provided by IHS under license with ASME
No reproduction or networking permitted without license from IHS
Not for Resale

$= \pm 0.17°R$ (*English*)

$= \pm 0.094$ K (*SI*)

$\nu_T = \nu_{\bar{X}}$ [See Eq. (47)]

$= 200$

2.4.2.3 Uncertainty of the Flow Measurement (Difference). The test result is the difference in flow between two tests. [See Eq. (58).]

$$\Delta m = m_1 - m_2$$

$$S_{\Delta m} = \pm\sqrt{S_{m_1}{}^2 + (-1)^2 S_{m_2}{}^2} = \pm S_m \sqrt{2}$$

$$U_{\Delta m_{99}} = \pm(B_{\Delta m} + 2S_{\Delta m}) \qquad U_{\Delta m_{95}} = \pm\sqrt{(B_{\Delta m})^2 + (2S_{\Delta m})^2}$$

$$= \pm(0 + 2S_{\Delta m}) \qquad = \pm\sqrt{0^2 + (2S_{\Delta m})^2}$$

$$= \pm 2S_{\Delta m} \qquad = \pm 2S_{\Delta m}$$

$$U_{\Delta m_{99}} = \pm 2S_m \sqrt{2} \qquad U_{\Delta m_{95}} = \pm 2S_m \sqrt{2}$$

From Eq. (54)

(*English*)

$$S_m = \pm 115.5 \sqrt{\left(\frac{0.0173}{12.78}\right)^2 + \left(\frac{-0.17}{2 \times 478.7}\right)^2 + \left(\frac{0.0005}{0.995}\right)^2 + \left(\frac{2 \times 0.001}{21.8}\right)^2}$$

$$S_m = \pm 0.168 \text{ lb}_m/\text{sec} \qquad S_{\Delta m} = \pm 0.238 \text{ lb}_m/\text{sec}$$

$$U_{\Delta m_{99}} = \pm 0.48 \text{ lb}_m/\text{sec} \qquad U_{\Delta m_{95}} = \pm 0.48 \text{ lb}_m/\text{sec}$$

$$= \pm 0.41\% \qquad = \pm 0.41\%$$

(*SI*)

$$S_m = \pm 52.39 \sqrt{\left(\frac{119.037}{88\,126}\right)^2 + \left(\frac{-0.094}{2 \times 265.9}\right)^2 + \left(\frac{0.0005}{0.995}\right)^2 + \left(\frac{0.00005}{0.554}\right)^2}$$

$$S_m = \pm 0.0762 \text{ kg/s} \qquad S_{\Delta m} = \pm 0.1078 \text{ kg/s}$$

Copyright ASME International
Provided by IHS under license with ASME
No reproduction or networking permitted without license from IHS
Not for Resale

TABLE 14 ERROR COMPARISONS OF EXAMPLES ONE AND TWO

	Example One — Facility		Example Two — Back-to-Back	
	English	*SI*	*English*	*SI*
Precision Index (S)(lb_m /sec, kg_m /s)	±0.18	±0.0787	±0.17	±0.0762
Degrees of Freedom (ν)	>30	>30	>30	>30
Bias Limit (B) (lb_m /sec, kg_m /s)	±0.53	±0.2457	0	0
Uncertainty (lb_m /sec, kg_m /s)	±0.88	±40	±0.34	±15

$$U_{\Delta m_{99}} = \pm 0.2155 \text{ kg/s} \qquad U_{\Delta m_{95}} = \pm 0.2155 \text{ kg/s}$$

$$= \pm 0.41\% \qquad = \pm 0.41\%$$

2.4.2.4 Comparison of Examples. Note that the differences shown in Table 14 are due entirely to differences in the measurement process definitions. The same fluid flow measurement system might be used in both examples. The back-to-back test has the smallest measurement uncertainty, but this uncertainty value does not apply to the measurement of absolute level of fluid flow, only to the difference.

2.5 EXAMPLE THREE — LIQUID FLOW

Water flowing at 60°F and 95 psig is to be measured using a 6.000 in. by 4.000 in. venturi tube. Ten readings of differential pressure are taken on a water-over-mercury manometer. The mass flow rate and the associated uncertainty is to be determined.

The applicable formula as taken from Fluid Meters, 6th ed., is

$$m = 0.099702 \frac{CYd^2 F_a \sqrt{\rho h_w}}{\sqrt{1 - \beta^4}}$$

Both Y and F_a will be taken as 1.00, and the above formula becomes

$$m = 0.099702 \frac{Cd^2 \sqrt{\rho h_w}}{\sqrt{1 - \beta^4}}$$

The precision index and bias error in flow rate may then be calculated using a Taylor series expansion as in Appendix B:

$$S_m = \sqrt{\left(\frac{\partial m}{\partial C} S_C\right)^2 + \left(\frac{\partial m}{\partial d} S_d\right)^2 + \left(\frac{\partial m}{\partial \beta} S_\beta\right)^2 + \left(\frac{\partial m}{\partial \rho} S_\rho\right)^2 + \left(\frac{\partial m}{\partial_{h_w}} S_{h_w}\right)^2}$$

and this may be written

$$\frac{S_m}{m} = \sqrt{\left(\frac{S_C}{C}\right)^2 + \left(\frac{2S_d}{d}\right)^2 + \left(\frac{2\beta^4}{1 - \beta^4} \frac{S_\beta}{\beta}\right)^2 + \left(\frac{1}{2} \frac{S_\rho}{\rho}\right)^2 + \left(\frac{1}{2} \frac{S_{h_w}}{h_w}\right)^2}$$

As an exercise let us examine how the bias error in flow rate is affected by a bias in the measurement of throat diameter as the diameter ratio increases.

This involves the terms

Copyright ASME International
Provided by IHS under license with ASME
No reproduction or networking permitted without license from IHS
Not for Resale

$$B = \sqrt{\left(\frac{2B_d}{d}\right)^2 + \left(\frac{2\beta^4}{1-\beta^4}\,\frac{B_\beta}{\beta}\right)^2}$$

Let us assume both inlet diameter D and throat diameter d are measured with a micrometer having a bias of 0.002 in.

Since $\beta = d/D$

$$\frac{B_j}{\beta} = \sqrt{\left(\frac{B_d}{d}\right)^2 + \left(\frac{B_D}{D}\right)^2}$$

$$\frac{B_j}{\beta} = \sqrt{\left(\frac{0.002}{4}\right)^2 + \left(\frac{0.002}{D}\right)^2}$$

and

$$B = \sqrt{\left(\frac{2 \times 0.002}{4}\right)^2 + \left(\frac{2\beta^4}{1-\beta^4}\,\frac{B_\beta}{\beta}\right)^2}$$

If d is held constant, the diameter D changes with β to give the values of Table 15, which are graphed in Fig. 17.

This brief calculation shows the sensitivity of the uncertainty in the flow rate to the diameter ratio, which is one of the reasons it is good practice to use small diameter ratios.

Continuing with our example, the coefficient value is taken from Fluid Meters, 6th ed., as $C = 0.984$ ±0.75%. Since this reference does not distinguish between bias and precision error, we will interpret this to be

$$B_C = 0.006 \quad \text{and} \quad S_C = 0.00075$$

The value of ρ is also taken from Fluid Meters, 6th ed., Table II-I-4, as 63.3707 lb_m/ft^3. We assume the bias and precision error to be negligible.

The differential pressure is read on a mercury manometer using a precision scale divided into 0.05-in. increments. Ten readings are taken as

7.90	7.96
7.95	7.94
7.98	7.98
8.00	7.95
7.92	7.98

giving an average $h_w = 7.96$ in. Hg and $S_{h_w} = 0.030$ in. Hg.

Assuming the conversion to inches of water at 68°F introduces no error, this becomes

$$h_w = 100.06 \text{ in. } H_2O \quad \text{and} \quad S_{h_w} = 0.377 \text{ in. } H_2O$$

The elemental bias error for the differential is assumed to be one-half the least count on the scale or

$$B_{h_w} = 0.025 \text{ in. Hg} = 0.314 \text{ in. } H_2O$$

Copyright ASME International
Provided by IHS under license with ASME
No reproduction or networking permitted without license from IHS
Not for Resale

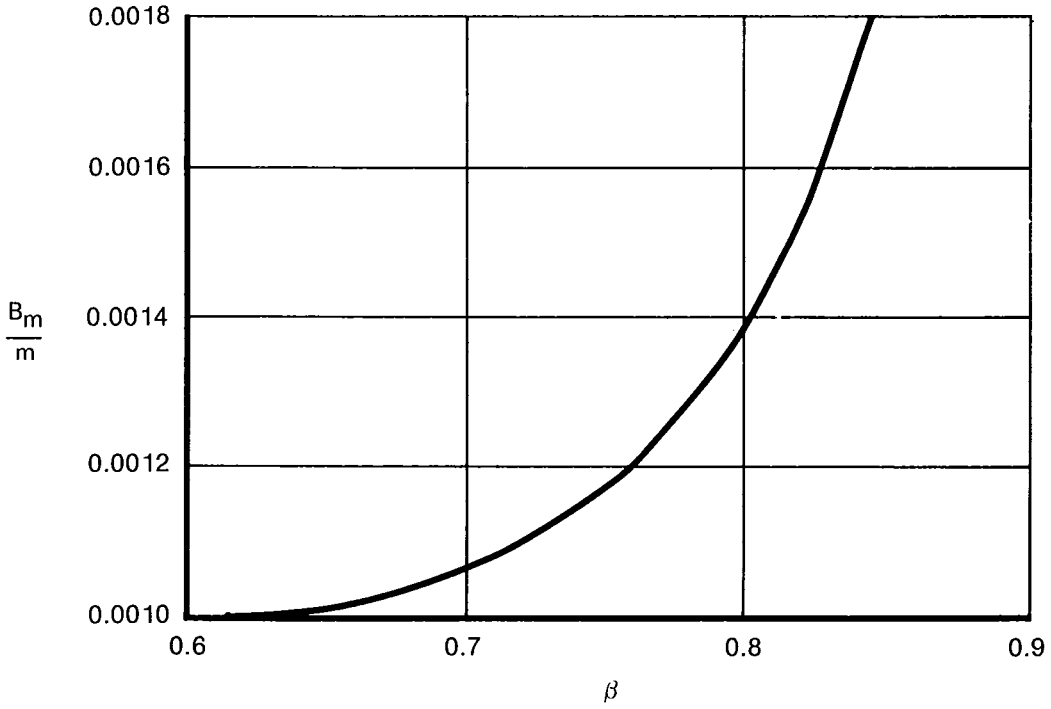

FIG. 17 GRAPH OF β VS B

TABLE 15 VALUES OF β AND B

β	$\frac{B_m}{m}$
0.67	0.00104
0.70	0.00107
0.75	0.00115
0.80	0.00133
0.85	0.00175

Results for $d = 4$ in. and $\beta = 0.667$ are tabulated in Table 16.

Since a large number of values were used in determining the coefficient values, ν_c may be taken to be large, say >100, and this will give a t value of 2.0.

Thus, the uncertainty can be given as

$$U_{m_{99}} = \pm[0.63 + 2(0.20)]\% = \pm(0.63 + 0.40)\% = \pm 1.03\%$$

$$m = 139.53 \text{ lb}_m/\text{sec} \pm 1.03\%$$

Suppose now that the venturi tube had been calibrated in a recognized hydraulic laboratory and the coefficient was given as

$$C = 0.986 \pm 0.25\%$$

Copyright ASME International
Provided by IHS under license with ASME
No reproduction or networking permitted without license from IHS
Not for Resale

TABLE 16 RESULTS FOR d = 4 in. AND β = 0.667

$$\frac{B_d}{d} = 0.0005 \qquad \frac{S_d}{d} = 0.0$$

$$\frac{B_D}{D} = 0.00033 \qquad \frac{S_D}{D} = 0.0$$

$$\frac{B_C}{C} = 0.006 \qquad \frac{S_C}{C} = 0.00075$$

$$\frac{B_\rho}{\rho} = 0.0 \qquad \frac{S_\rho}{\rho} = 0.0$$

$$\frac{B_{h_w}}{h_w} = 0.00314 \qquad \frac{S_{h_w}}{h_w} = 0.00377$$

$$\frac{B_\beta}{\beta} = 0.0006 \qquad \frac{S_\beta}{\beta} = 0.0$$

Combining

$$B_m = m\sqrt{\left(\frac{B_C}{C}\right)^2 + \left(\frac{2B_d}{d}\right)^2 + \left(\frac{2\beta^4}{1-\beta^4}\,\frac{B_\beta}{\beta}\right)^2 + \left(\frac{B_\rho}{2\rho}\right)^2 + \left(\frac{B_{h_w}}{2h_w}\right)^2}$$

$$\frac{B_m}{m} = \sqrt{(0.006)^2 + (2 \times 0.0005)^2 + \left(\frac{2 \times 0.667^4}{1 - 0.667^4}\,(0.0006)\right)^2 + 0.0 + \left(\frac{0.00314}{2}\right)^2}$$

$$\frac{B_m}{m} = 0.0063$$

$$\frac{S_m}{m} = \sqrt{(0.00075)^2 + 0.0 + 0.0 + 0.0 + \left(\frac{0.00377}{2}\right)^2}$$

$$\frac{S_m}{m} = 0.0020$$

This coefficient value was determined using the nominal values of diameter so that it effectively removes all the uncertainty from the values of d and β.

This above uncertainty (±0.25%) will be taken as ±0.20% bias and ±0.025% precision. The new values for the bias and precision indices will be

$$\frac{B_m}{m} = \sqrt{(0.002)^2 + \left(\frac{0.00314}{2}\right)^2} = \pm 0.0025$$

$$\frac{S_m}{m} = \sqrt{(0.00025)^2 + \left(\frac{0.00377}{2}\right)^2} = \pm 0.0019$$

or

$$U_{m_{99}} = \pm[0.25 + 2(0.19)]\% = \pm 0.63\%$$

Copyright ASME International
Provided by IHS under license with ASME
No reproduction or networking permitted without license from IHS
Not for Resale

APPENDIX A – GLOSSARY

Definitions followed by an asterisk (*) are taken from ISO 3534, Statistics – Vocabulary and Symbols (1977).

accuracy – See Fig. 4, p. 8.

average value – the arithmetic mean of N readings; the average value is calculated as:

$$\bar{X} = \text{average value} = \frac{\sum_{i=1}^{N} X_i}{N}$$

bias (β) – the difference between the average of all possible measured values and the true value; the systematic error or fixed error which characterizes every member of a set of measurements (Fig. A1)

bias of estimator – the deviation of the expectation of an estimator of a parameter from the true value of this parameter. This expression may also be used in a wider sense to designate the noncoincidence of the expectation of an estimator with the true value of the parameter.*

bias limit (B) – the estimate of the upper limit of the true bias error δ*

calibration – the process of comparing and correcting the response of an instrument to agree with a standard instrument over the measurement range

calibration, end-to-end – an end-to-end calibration applies a known or standard pressure to the pressure transducer and records the system response through the data acquisition and data reduction systems

calibration hierarchy – the chain of calibrations which link or trace a measuring instrument to the National Bureau of Standards

confidence coefficient; confidence level – the value $1 - \alpha$ of the probability associated with a confidence interval or a statistical tolerance interval. (See *coverage* and *statistical confidence interval*.)*

control chart – a chart on which limits are drawn and on which are plotted values of any statistic computed from successive samples of a production. The statistics which are used (mean, range, percent defective, etc.) define the different kinds of control charts.*

correlation coefficient (r) – a measure of the linear interdependence between two variables. It varies between -1 and $+1$ with the intermediate value of zero indicating the absence of correlation. The limiting values indicate perfect negative (inverse) or positive correlation (Fig. A2).

coverage – the percentage frequency that an interval estimate of a parameter contains the true value. Ninety-five-percent confidence intervals provide 95% coverage of the true value. That is, in repeated sampling when a 95% confidence interval is constructed for each sample, over the long run the intervals will contain the true value 95% of the time.

degrees of freedom (ν) – a sample of N values is said to have N degrees of freedom, and a statistic calculated from it is also said to have N degrees of freedom. But if k functions of the sample values are held constant, the number of degrees of freedom is reduced by k. For example, the statistic

$$\sum_{i=1}^{N} (X_i - \bar{X})^2,$$

where $\bar{X}$ is the sample mean, is said to have $N - 1$ degrees of freedom. The justification for this is that (a) the sample mean is regarded as fixed or (b) in normal variation the N quantities $(X_i - \bar{X})$ are distributed independently of $\bar{X}$ and hence may be regarded as $N - 1$ independent variates or N variates connected by the linear relation $\Sigma (X_i - \bar{X}) = 0$.

Copyright ASME International
Provided by IHS under license with ASME
No reproduction or networking permitted without license from IHS
Not for Resale

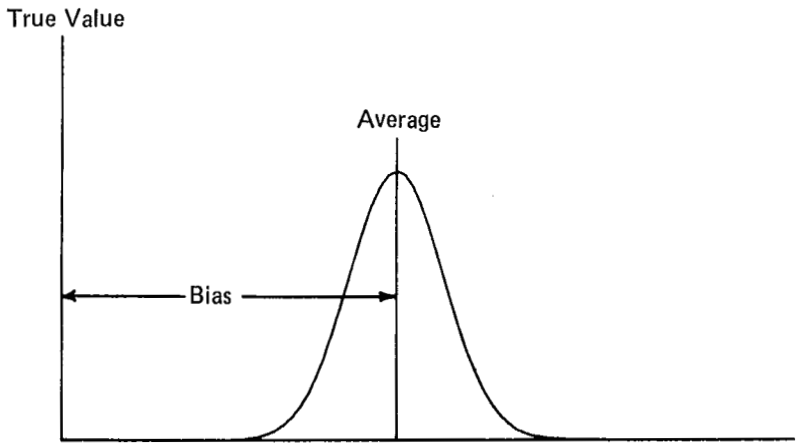

FIG. A1 BIAS IN A RANDOM PROCESS

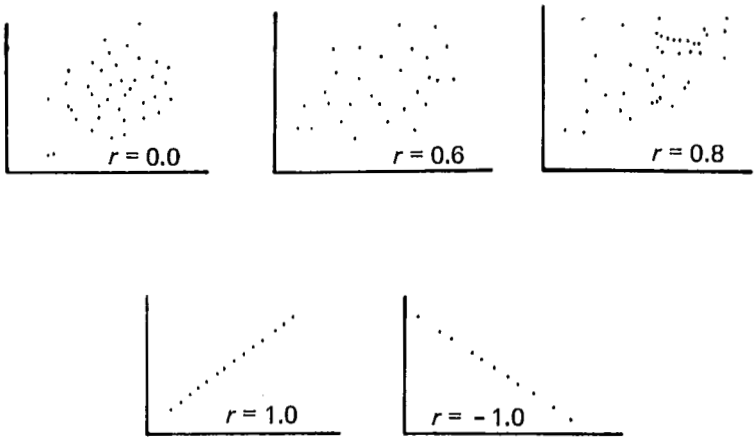

FIG. A2 CORRELATION COEFFICIENTS

elemental error – the bias and/or precision error associated with a single source or process in a chain of sources or processes

estimate – a value calculated from a sample of data as a substitute for an unknown population constant. For example, the sample standard deviation S is the estimate which describes the population standard deviation σ.

estimator – a statistic intended to estimate a population parameter*

frequency distribution – the relationship between the values of a characteristic (variable) and their absolute or relative frequencies. The distribution is often presented as a table with special groupings (classes) if the values are measured on a continuous scale.*

joint distribution function – a function describing the simultaneous distribution of two variables

laboratory standard – an instrument which is calibrated periodically at the NBS. The laboratory standard may also be called an *interlab standard.*

mathematical model – a mathematical description of a system. It may be a formula, a computer program, or a statistical model.

measurement error – the collective term meaning the difference between the true value and the measured

Copyright ASME International
Provided by IHS under license with ASME
No reproduction or networking permitted without license from IHS
Not for Resale

value. Includes both bias and precision error. (See *accuracy* and *uncertainty interval*.) Accuracy implies small measurement error and small uncertainty.

multiple measurement – more than a single concurrent measurement of the same parameter

NBS – National Bureau of Standards; the usual reference or source of the true value for measurements in the United States of America

observed value – the value of a characteristic determined as the result of an observation or test*

one-sided confidence interval – when T is a function of the observed values such that, θ being a population parameter to be estimated, the probabiiity $Pr\ (T \leqslant \theta)$ or the probability $Pr\ (T \geqslant \theta)$ is equal to $1 - \alpha$ (where $1 - \alpha$ is a fixed number, positive and less than 1), the interval from the smallest possible value of θ up to T, or the interval between T and the greatest possible value of θ, is a one-sided $(1 - \alpha)$ confidence interval for θ. The limit T of the confidence interval is a random variable and as such will assume different values in every sample. In a long series of samples, the relative frequency of cases where the interval includes θ would be approximately equal to $1 - \alpha$.*

parameter – an unknown quantity which may vary over a certain set of values. In statistics, it occurs in expressions defining frequency distributions (population parameters). Examples: the mean of a normal distribution; the expected value of a Poisson variable.

population – the totality of items under consideration. Every clearly defined part of a population is called a *subpopulation.* In the case of a random variable, the probability distribution is considered as defining the population of that variable.*

population parameter – a quantity used to describe the distribution of a characteristic in the population

precision – the closeness of agreement between the results obtained by applying the experimental procedure several times under prescribed conditions. The smaller the random part of the experimental errors which affect the results, the more precise is the procedure.*

precision error – the random error observed in a set of repeated measurements. This error is the result of a large number of small effects, each of which is negligible alone. Also known as *repeatability error* and *sampling error.*

precision index – the precision index S defined herein as the computed standard deviation of the measurements

$$S = \sqrt{\frac{\sum_{i=1}^{N} (X_i - \bar{X})^2}{N - 1}}$$

When we combine several elemental precision indices:

$$S = \sqrt{\sum_{i} S_i^2}$$

quality control – the set of operations (programming, coordinating, carrying out) intended to maintain or to improve quality, and to set up the production at the most economical level which allows for customer satisfaction*

range – the difference between the greatest and the smallest observed values of a quantitative characteristic*

repeatability (qualitative) – the closeness of agreement between successive results obtained with the same method on identical test material, under the same conditions (same operator, same apparatus, same laboratory, and short intervals of time)

NOTE: The representative parameters of the dispersion of the population which may be associated with the results are qualified by the term *repeatability*. Example: standard deviation of repeatability; variance of repeatability.*

repeatability (quantitative) – the value below which the absolute difference between two single test results

Copyright ASME International
Provided by IHS under license with ASME
No reproduction or networking permitted without license from IHS
Not for Resale

obtained in the above conditions may be expected to lie with a specified probability. In the absence of other indication, the probability is 95%.*

sample size (N) – the number of sampling units which are to be included in the sample*

sampling error – part of the total estimation error of a parameter due to the random nature of the sample*

standard deviation (σ) – the most widely used measure of dispersion of a frequency distribution. It is the precision index and is the square root of the variance: S is an estimate of σ calculated from a sample of data. It may be shown mathematically that with a Gaussian (normal) distribution the mean plus and minus 1.96 standard deviations will include 95% of the population.

standard error – the standard deviation of an estimator. The standard error provides an estimation of the random part of the total estimation error involved in estimating a population parameter from a sample.*

standard error of estimate (*residual standard deviation*) – the measure of dispersion of the dependent variable (output) about the least-squares line in curve fitting or regression analysis. It is the precision index of the output for any fixed level of the independent variable input. The formula for calculating this is

$$\text{SEE} = \sqrt{\frac{\sum_{i=1}^{N} (y_{\text{OBS}} - y_{\text{CAL}})^2}{N - K}}$$

for a curve fit for N data points in which K constants are estimated for the curve.

standard error of the mean – an estimate of the scatter in a set of sample means based on a given sample of size N. The sample standard deviation S is estimated as

$$S = \sqrt{\frac{\sum_{i} (X_i - \bar{X})^2}{N - 1}}$$

Then the standard error of the mean is

$$\frac{S}{\sqrt{N}}$$

In the limit, as N becomes large, the estimated standard error of the mean converges to zero, while the standard deviation converges to a fixed nonzero value.

statistic – a parameter value based on data. For example, $\bar{X}$ and S are statistics. The bias limit, a judgment, is not a statistic.

-*statistic* – a function of the observed values derived from a sample

statistical confidence interval – an interval estimate of a population parameter based on data. The confidence level establishes the coverage of the interval. That is, a 95% confidence interval would cover or include the true value of the parameter 95% of the time in repeated sampling.

statistical quality control – quality control using statistical methods (such as control charts and sampling plans)*

statistical quality control charts – a plot of the results of repeated sampling versus time. The central tendency and upper and lower limits are marked. Points outside the limits and trends and sequences in the points indicate nonrandom conditions.

Student's t-distribution (t) – the ratio of the difference between the population mean and the sample mean to a sample standard deviation (multiplied by a constant) in samples from a normal population. It is used to set confidence limits for the population mean. It is obtained from tables entered with degrees of freedom and risk level.

Taylor series – a power series to calculate the value of a function at a point in the neighborhood of some reference point. The series expresses the difference or differential between the new point and the reference

Copyright ASME International
Provided by IHS under license with ASME
No reproduction or networking permitted without license from IHS
Not for Resale

point in terms of the successive derivatives of the function. Its form is

$$f(x) - f(a) = \sum_{r=1}^{r=n-1} \frac{(X-a)^r}{r} f^r(a) + R_n$$

where $f^r(a)$ denotes the value of the rth derivative of $f(x)$ at the reference point $x = a$. Commonly, if the series converges, the remainder R_n is made infinitesimal by selecting an arbitrary number of terms, and usually only the first term is used.

test – an operation made in order to measure or classify a characteristic*

total estimation error – in the estimation of a parameter, the difference between the calculated value of the estimator and the true value of this parameter

NOTE: Total estimation of error may be due to sampling error, measurement error, rounding-off of values or subdividing into classes, a bias of the estimator, and other errors.*

traceability – the ability to trace the calibration of a measuring device through a chain of calibrations to the National Bureau of Standards

transducer – a device for converting mechanical stimulation into an electrical signal. It is used to measure quantities such as pressure, temperature, and force.

transfer standard – a laboratory instrument which is used to calibrate working standards and which is periodically calibrated against the laboratory standard

true value – the value which characterizes a quantity perfectly defined in the conditions which exist at the moment when that quantity is observed (or the subject of a determination). It is an ideal value which could be arrived at only if all causes of measurement error were eliminated and the population was infinite.*

true value – within the USA, the reference value of true value is often defined by the National Bureau of Standards and is assumed to be the true value of any measured quantity.

unbiased estimator – an estimator of a parameter such that its expectation equals the true value of this parameter*

uncertainty interval (U) – an estimate of the error band, centered about the measurement, within which the true value must fall with high probability. The measurement process is: $\pm U_{99} = \pm(B + t_{95}S)$, $U_{95} = \pm\sqrt{B^2 + (t_{95}S)^2}$

variance (σ^2) – a measure of scatter or spread of a distribution. It is estimated by

$$S^2 = \frac{\sum(X_i - \bar{X})^2}{N-1}$$

from a sample of data. The variance is the square of the standard deviation.

variance – a measure of dispersion based on the mean square deviation from the arithmetic mean*

working standard – an instrument which is calibrated in a laboratory against an interlab or transfer standard and is used as a standard in calibrating measuring instruments

Copyright ASME International
Provided by IHS under license with ASME
No reproduction or networking permitted without license from IHS
Not for Resale

APPENDIX B – PROPAGATION OF ERRORS BY TAYLOR SERIES

B1 GENERAL

The proofs in this section are shown for two- and three-variable functions. These proofs can be easily extended to functions with more variables, although, because of its length, the general case is not shown here.

B2 TWO INDEPENDENT VARIABLES

If it is assumed that response Z is defined as a function of measured variables x and y, the two restrictions that must be considered are as follows.

(*1*) Z is continuous in the neighborhood of the point (μ_x, μ_y). Both x and y will have error distributions about this point, and the notation (μ_x and μ_y) indicates the mean values of these distributions.

(*2*) Z has continuous partial derivatives in a neighborhood of the point (μ_x, μ_y).

These conditions are satisfied if the functions to be considered are restricted to smooth curves in a neighborhood of the point with no discontinuities (jumps or breaks in the curve). The Taylor series expansion for Z is

$$Z = Z_{\mu_x, \mu_y} + \frac{\partial Z}{\partial x}(x - \mu_x) + \frac{\partial Z}{\partial y}(y - \mu_y) + R_2 \tag{B1}$$

where $\partial Z/\partial x$ and $\partial Z/\partial y$ are evaluated at the point (μ_x, μ_y).

$$R_2 \leqslant \frac{1}{2}\left[\frac{\partial^2 Z}{\partial x^2}(x - \mu_x)^2 + \frac{\partial^2 Z}{\partial y^2}(y - \mu_y)^2\right] \tag{B2}$$

where $\partial^2 Z/\partial x^2$ and $\partial^2 Z/\partial y^2$ are evaluated at (θ_1, θ_2) with θ_1 between x and μ_x, and θ_2 between y and μ_y.

The quantity R_2, the remainder after two terms, is not significant if either:

(*a*) $(x - \mu_x)$ and $(y - \mu_y)$ are small;

(*b*) the second partials $\partial^2 Z/\partial x^2$ and $\partial^2 Z/\partial y^2$ are small or zero. These partials are zero for linear functions.

By assuming R_2 to be small or zero, Eq. (B1) becomes

$$Z \doteq \mu_Z + \frac{\partial Z}{\partial x}(x - \mu_x) + \frac{\partial Z}{\partial y}(y - \mu_y) \tag{B3}$$

or

$$Z - \mu_Z \doteq \frac{\partial Z}{\partial x}(x - \mu_x) + \frac{\partial Z}{\partial y}(y - \mu_y) \tag{B4}$$

By defining μ_Z as the average value of the distribution of Z, the difference $(Z - \mu_Z)$ is the difference of Z about its average value. This difference may be approximated by Eq. (B4).

$$Z - \mu_Z \approx \frac{\partial Z}{\partial x}(x - \mu_x) + \frac{\partial Z}{\partial y}(y - \mu_y) \tag{B5}$$

where the partials are evaluated at the point (μ_x, μ_y).

Copyright ASME International
Provided by IHS under license with ASME
No reproduction or networking permitted without license from IHS
Not for Resale

The variation in Z is defined by

$$\sigma_Z^2 \equiv \int (Z - \mu_Z)^2 p_Z \, dZ$$

where p_Z is the probability density function of Z. Therefore,

$$\sigma_Z^2 \approx \iint \left[\frac{\partial Z}{\partial x}(x - \mu_x) + \frac{\partial Z}{\partial y}(y - \mu_y)\right]^2 p_{xy} \, dx \, dy \tag{B6}$$

$$\approx \iint \left[\frac{\partial Z}{\partial x}(x - \mu_x)\right]^2 p_{xy} \, dy \, dx + \iint \left[\frac{\partial Z}{\partial y}(y - \mu_y)\right]^2 p_{xy} \, dx \, dy$$

$$+ 2 \iint \left[\frac{\partial Z}{\partial x}(x - \mu_x)\right]\left[\frac{\partial Z}{\partial y}(y - \mu_y)\right] p_{xy} \, dx \, dy \tag{B7}$$

where p_{xy} is the joint distribution function of x and y. Integrating the first term of Eq. (B7) with respect to y and second term of Eq. (B7) with respect to x gives

$$\sigma_Z^2 \approx \int \left(\frac{\partial Z}{\partial x}\right)^2 (x - \mu_x)^2 p_x \, dx + \int \left(\frac{\partial Z}{\partial y}\right)^2 (y - \mu_y)^2 p_y \, dy + 2 \iint \frac{\partial Z}{\partial x}(x - \mu_x) \frac{\partial Z}{\partial y}(y - \mu_y) p_{xy} \, dx \, dy \tag{B8}$$

If μ_x and μ_y are the means of the distributions of x and y, then define the following:

$$\sigma_x^2 = \int (x - \mu_x)^2 p_x \, dx \tag{B9}$$

$$\sigma_y^2 = \int (y - \mu_y)^2 p_y \, dy \tag{B10}$$

$$\rho_{xy}\sigma_x\sigma_y = \iint (x - \mu_x)(y - \mu_y) p_{xy} \, dx \, dy \tag{B11}$$

where ρ_{xy} is the coefficient of correlation between x and y. Combining the definitions and Eq. (B8) gives

$$\sigma_Z^2 \approx \left[\left(\frac{\partial Z}{\partial x}\right)^2 \sigma_x^2 + \left(\frac{\partial Z}{\partial y}\right)^2 \sigma_y^2 + 2 \frac{\partial Z}{\partial y} \frac{\partial Z}{\partial x} \rho\sigma_x\sigma_y\right] \tag{B12}$$

If x and y are independent variables, then $\rho = 0$ and

$$\sigma_Z^2 \approx \left(\frac{\partial Z}{\partial x}\right)^2 \sigma_x^2 + \left(\frac{\partial Z}{\partial y}\right)^2 \sigma_y^2 \tag{B13}$$

Copyright ASME International
Provided by IHS under license with ASME
No reproduction or networking permitted without license from IHS
Not for Resale

B3 THREE INDEPENDENT VARIABLES

If it is assumed that Z is a function of variables x, y, and w, two restrictions must be considered:

(*1*) Z is continuous in a neighborhood of the point (μ_x, μ_y, μ_w)

(*2*) Z has continuous partial derivatives in a neighborhood of (μ_x, μ_y, μ_w)

If these restrictions are satisfied, then the Taylor series expansion for Z in the vicinity of (μ_x, μ_y, μ_w) is

$$Z = \mu_Z + \frac{\partial Z}{\partial x}(x - \mu_x) + \frac{\partial Z}{\partial y}(y - \mu_y) + \frac{\partial Z}{\partial w}(w - \mu_w) + R_2 \tag{B14}$$

where

$$\frac{\partial Z}{\partial x}, \frac{\partial Z}{\partial y}, \text{ and } \frac{\partial Z}{\partial w} \text{ are evaluated at } (\mu_x, \mu_y, \mu_w),$$

$$R_2 \leqslant \frac{1}{2}\left[\frac{\partial^2 Z}{\partial x^2}(x - \mu_x)^2 + \frac{\partial^2 Z}{\partial y^2}(y - \mu_y)^2 + \frac{\partial^2 Z}{\partial w^2}(w - \mu_w)^2\right] \tag{B15}$$

These second partials are evaluated at a point $\theta_1, \theta_2, \theta_3$, defined so that θ_1 is between μ_x and x, θ_2 is between μ_y and y, and θ_3 is between μ_w and w. The same restrictions apply to R_2 as defined for two-variable functions.

By assuming R_2 to be small or zero, Eq. (B14) becomes

$$Z - \mu_Z \doteq \frac{\partial Z}{\partial x}(x - \mu_x) + \frac{\partial Z}{\partial y}(y - \mu_y) + \frac{\partial Z}{\partial w}(w - \mu_w) \tag{B16}$$

where the partials are evaluated at the point (μ_x, μ_y, μ_w).

The variation in Z is defined by

$$\sigma_Z^2 \equiv \int (Z - \mu_Z)^2 p_Z \, dZ \tag{B17}$$

where p_Z is the probability density function of Z. Therefore,

$$\sigma_Z^2 \approx \iiint \left[\frac{\partial Z}{\partial x}(x - \mu_x) + \frac{\partial Z}{\partial y}(y - \mu_y) + \frac{\partial Z}{\partial w}(w - \mu_w)\right]^2 p_{x,y,w} \, dx \, dy \, dw \tag{B18}$$

$$\approx \iiint \left[\frac{\partial Z}{\partial x}(x - \mu_x)\right]^2 p_{x,y,w} \, dw \, dy \, dx + \cdots$$

$$+ 2\iiint \frac{\partial Z}{\partial x}\frac{\partial Z}{\partial y}(x - \mu_x)(y - \mu_y) p_{x,y,w} \, dw \, dx \, dy + \cdots \tag{B19}$$

where $p_{x,y,w}$ is the joint distribution function of x, y, and w. Integrating in the proper order produces these results:

$$\sigma_Z^2 \approx \int \left(\frac{\partial Z}{\partial x}\right)^2 (x - \mu_x)^2 p_x \, dx + \cdots + 2\iint \frac{\partial Z}{\partial x}\frac{\partial Z}{\partial y}(x - \mu_x)(y - \mu_y) p_{xy} \, dx \, dy \tag{B20}$$

Copyright ASME International
Provided by IHS under license with ASME
No reproduction or networking permitted without license from IHS
Not for Resale

Therefore,

$$\sigma_Z^2 \approx \left(\frac{\partial Z}{\partial x}\right)^2 \sigma_x^2 + \left(\frac{\partial Z}{\partial y}\right)^2 \sigma_y^2 + \left(\frac{\partial Z}{\partial w}\right)^2 \sigma_w^2 + 2\,\frac{\partial Z}{\partial x}\,\frac{\partial Z}{\partial y}\,\rho_{xy}\sigma_x\sigma_y$$

$$+ 2\,\frac{\partial Z}{\partial x}\,\frac{\partial Z}{\partial w}\,\rho_{xw}\sigma_x\sigma_w + 2\,\frac{\partial Z}{\partial y}\,\frac{\partial Z}{\partial w}\,\rho_{yw}\sigma_y\sigma_w \qquad \text{(B21)}$$

If x, y, and w are independent variables, then $\rho_{xy} = \rho_{xw} = \rho_{yw} = 0$ and

$$\sigma_Z^2 = \left(\frac{\partial Z}{\partial x}\right)^2 \sigma_x^2 + \left(\frac{\partial Z}{\partial y}\right)^2 \sigma_y^2 + \left(\frac{\partial Z}{\partial w}\right)^2 \sigma_w^2 \qquad \text{(B22)}$$

B4 MONTE CARLO SIMULATION

To determine the restrictions that must be placed on applications of the method of partial derivatives, a Monte Carlo Simulator was designed to provide simulation checks for the computation of various functions. Comparative results are listed in Tables B1 and B2.

Table B1 contrasts the results of the Monte Carlo simulation of the functions tabulated, column (7), with the estimates using partial derivatives, column (6). One thousand functional values were obtained in each simulation. Column (1) identifies the function simulated and column (2) gives the number of the simulation run. Column (3) includes the parameters of the populations from which the random numbers were drawn. Column (4) lists the method of partials estimates of variance for the function based on the theoretical input (column 3). Column (5) lists the estimates of variance for the function calculated using the method of partial derivatives from the observed variation of the variables x and y. Column (6) gives column (5) corrected for the observed correlation between the pairs of (x, y) input values. The correction factor is:

$$2\rho\sigma_x^2\sigma_y^2\,\frac{\partial Z}{\partial x}\,\frac{\partial Z}{\partial y}$$

where ρ is the observed correlation between paired values of x and y, σ_x^2 and σ_y^2 are the observed variances of x and y, and $\partial Z/\partial x$ and $\partial Z/\partial y$ are the partial derivatives of the function Z. Column (7) lists the simulator results for the function (column 1) for 1000 data points.

Columns (1) through (3) of Table B2 present the input to the Monte Carlo Simulator. The theoretical input column (3) shows the parameters of the population of random numbers that were used to produce the functional values. Column (5) summarizes the results of the simulation. These results may be compared with the estimates from the method of partials, column (4).

Simulation results have shown that the method of partial derivatives is most accurate for functions involving sums and differences of the observed variables. For these functions, if the variables are mutually independent, the Taylor series is exact for any magnitude of error in the measured parameters. If the variables are not mutually independent, a correction factor can be computed that will ensure exactitude of the method. (The correction factor $[2\rho_{xy}\sigma_x\sigma_y\ (\partial Z/\partial x)\ (\partial Z/\partial y)]$ is the third term in Eq. (B12). If ρ_{xy} is not zero, this term should be included in estimating σ_Z^2. From data, ρ_{xy} may be estimated with

$$r = \frac{S_{xy}}{S_x S_y} = \frac{\Sigma(x_i - \bar{x})\,(y_i - \bar{y})}{\sqrt{\Sigma(x_i - \bar{x})^2\ \Sigma(y_i - \bar{y})^2}}$$

where n pairs of observations are available and $\bar{x}$ and $\bar{y}$ are the average of the x_i and y_i values, respectively.)

Copyright ASME International
Provided by IHS under license with ASME
No reproduction or networking permitted without license from IHS
Not for Resale

TABLE B1 RESULTS OF MONTE CARLO SIMULATION FOR THEORETICAL INPUT (σ_x^2, μ_x, σ_y^2, μ_y)

(1) Function	(2) Simulation Run Number	(3) Theoretical Input σ_x^2	μ_x	σ_y^2	μ_y	(4) Method of Partials Estimated Variance (Theoretical)	(5) Method of Partials Estimated Variance (Actual Input)	(6) Input Variance Corrected for Nonindependence (Method of Partials)	(7) Observed Variance (Simulator Results)
$x+y$	1	1.0	10	4.0	20	5.0	4.9477	4.8496	4.8567
	2	1.0	10	4.0	20	5.0	4.9186	4.8435	4.8506
	3	1.0	10	4.0	20	5.0	5.0786	4.9493	4.9564
	4	1.0	10	4.0	20	5.0	5.1639	5.2444	5.2515
$x-y$	1	1.0	10	4.0	20	5.0	4.9477	5.0358	5.0410
	2	1.0	10	4.0	20	5.0	4.9186	4.9937	4.9885
	3	1.0	10	4.0	20	5.0	5.0786	5.2079	5.2028
	4	1.0	10	4.0	20	5.0	5.1639	5.0834	5.0782
$(x)(y)$	1	1.0	10	4.0	20	800.0	792.81	773.27	768.63
	2	1.0	10	4.0	20	800.0	794.33	779.29	797.48
	3	1.0	10	4.0	20	800.0	802.28	776.41	775.78
	4	1.0	10	4.0	20	800.0	867.67	883.85	883.38
x/y	1	1.0	10	4.0	20	0.005	0.0050	0.0051	0.0054
	2	1.0	10	4.0	20	0.005	0.0050	0.0051	0.0054
	3	1.0	10	4.0	20	0.005	0.0050	0.0052	0.0055
	4	1.0	10	4.0	20	0.005	0.0054	0.0053	0.0057

TABLE B2 RESULTS OF MONTE CARLO SIMULATION FOR THEORETICAL INPUT (μ_{x_I}, $\sigma_{x_I}^2$)

(1) Function Z	(2) Number of Simulations	(3) Theoretical Input μ_{x_I}	$\sigma_{x_I}^2$	(4) Estimated Parameters (Method of Partials) μ_Z	σ_Z^2	(5) Simulation Results μ_Z	σ_Z^2
$(x_1x_2)/x_3$	2	20	1.0	20	3.00	20.2 20.6	2.56 3.24
$(x_1x_2)/(x_3x_4x_5)$	1	20	1.0	0.05	3.12×10^{-5}	0.0505	3.6×10^{-5}
$(x_1x_2x_3x_4)/(x_5x_6x_7)$	2	20	1.0	20	7.00	20.04 20.25	8.41 8.41
$(x_1x_2x_3)\Big/\left(\prod_{i=4}^{9} x_i\right)$	1	20	1.0	1.25×10^{-4}	3.52×10^{-10}	1.29×10^{-4}	4.0×10^{-10}
$\left(\prod_{i=1}^{6} x_i\right)\Big/(x_7x_8x_9)$	2	20	1.0	8000	1.44×10^{6}	8150 8300	1.69×10^{6} 1.82×10^{6}

Copyright ASME International
Provided by IHS under license with ASME
No reproduction or networking permitted without license from IHS
Not for Resale

TABLE B3 ERROR PROPAGATION FORMULAS

Function	Taylor Formula	Coefficient of Variation Formula
$w = f(x, y)$	$S_w^2 \approx \left(\frac{\partial w}{\partial x} S_x\right)^2 + \left(\frac{\partial w}{\partial y} S_y\right)^2$	
$w = Ax + By$	$S_w^2 \approx A^2 S_x^2 + B^2 S_y^2$	$V_w^2 \approx \frac{A^2 x^2 V_x^2 + B^2 y^2 V_y^2}{(Ax + By)^2}$
$w = \frac{1}{y}$	$S_w^2 \approx \frac{S_y^2}{y^4}$	$V_w^2 \approx V_y^2$
$w = \frac{x}{x + y}$	$S_w^2 \approx \left(\frac{yS_x}{(x+y)^2}\right)^2 + \left(\frac{xS_y}{(x+y)^2}\right)^2$	$V_w^2 \approx y^2 (V_x^2 + V_y^2)/(x + y)^2$
$w = \frac{x}{1 + x}$	$S_w^2 \approx \frac{S_x^2}{(1+x)^4}$	$V_w^2 \approx \frac{V_x^2}{(1+x)^2}$
$w = xy$	$S_w^2 \approx (yS_x)^2 + (xS_y)^2$	$V_w^2 \approx V_x^2 + V_y^2$
$w = x^2$	$S_w^2 \approx 4x^2 S_x^2$	$V_w^2 \approx 4V_x^2$
$w = x^{1/2}$	$S_w^2 \approx \frac{S_x^2}{4x}$	$V_w^2 \approx \frac{V_x^2}{4}$
$w = \ln x$	$S_w^2 \approx \frac{S_x^2}{x^2}$	$V_w^2 \approx \left(\frac{V_x}{\ln x}\right)^2$
$w = kx^a y^b$	$S_w^2 \approx (aky^b x^{a-1} S_x)^2 + (bkx^a y^{b-1} S_y)^2$	$V_w^2 \approx (aV_x)^2 + (bV_y)^2$

where

$$V_x = \frac{S_x}{\bar{x}}$$

$$V_y = \frac{S_y}{\bar{y}}$$

$$V_w = \frac{S_w}{\bar{w}}; \bar{w} = f(\bar{x}, \bar{y})$$

Close approximations can be made for errors that exist in functions involving products and quotients of independently varying observed values if the ratio of measured errors to their respective nominal values is small (less than 0.1). The approximation improves as measured errors decrease in relation to their nominals. For all of the functions examined involving two or more independent variables, the approximation is within 10% of the true error. The simulation results are summarized in Tables B1 and B2.

Table B3 shows the Taylor formula for several functions. In addition, the Taylor formula for the coefficient of variation is also listed. The coefficient of variation is easily converted to a percentage variation by multiplying by 100.

Copyright ASME International
Provided by IHS under license with ASME
No reproduction or networking permitted without license from IHS
Not for Resale

APPENDIX C – OUTLIER DETECTION

C1 GENERAL

All measurement systems may produce wild data points. These points may be caused by temporary or intermittent malfunctions of the measurement system, or they may represent actual variations in the measurement. Errors of this type cannot be estimated as part of the uncertainty of the measurement. The points are out-of-control points for the system and are meaningless as steady-state test data. They should be discarded. Figure C1 shows two spurious data points (sometimes called *outliers*).

All data should be inspected for wild data points as a continuing quality control check on the measurement process. Identification criteria should be based on engineering analysis of instrumentation, thermodynamics, flow profiles, and past history with similar data. To ease the burden of scanning large masses of data, computerized routines are available to scan steady-state data and flag suspected outliers. The flagged points should then be subjected to an engineering analysis.

These routines are intended to be used in scanning small samples of data from a large number of parameters at many time slices. The work of paging through volumes of data can be reduced to a manageable job with this approach. The computer will scan the data and flag suspect points. The engineer, relieved of the burden of scanning the data, can closely examine each suspected wild point.

The effect of these outliers is to increase the precision error of the system. A test is needed to determine if a particular point from a sample is an outlier. The test must consider two types of errors in detecting outliers:

(*1*) rejecting a good data point

(*2*) not rejecting a bad data point.

We usually set the probability of error for rejecting a good point at 5%. This means that the odds against rejecting a good point are 20 to 1 (or less). We could increase the odds by setting the probability of (1) lower. However, as we do this we decrease the probability of rejecting bad data points. That is, reducing the probability of rejecting a good point will require that the rejected points be further from the calculated mean and fewer bad data points will be identified. For large sample sizes (several hundred measurements), almost all bad data points can be identified. For small samples (five or ten), bad data points are hard to identify.

Two tests are recommended for determining whether spurious data are outliers: the Thompson's τ and Grubbs' Method (see C6). As will be seen in C4, Thompson's τ is excellent for rejecting outliers, but also rejects a large number of good values. Although Grubbs' Method does not reject as many outliers, the number of good points rejected is small.

Since the advent of automatic rejection of outliers in computer routines, a technique such as Thompson's τ may reject too many good data points. Therefore, Thompson's τ is recommended for flagging possible outliers for further examination and Grubbs' Method for those instances when automatic outlier rejection is necessary without further examination.

C2 THOMPSON'S TAU

Consider a sample X_i of N measurements. We can calculate the mean $\bar{X}$ and a standard deviation S^* of the sample.

$$\bar{X} = \sum_{i=1}^{N} \frac{X_i}{N} \quad \text{and} \quad S^* = \sqrt{\sum_{i=1}^{N} \frac{(X_i - \bar{X})^2}{N}}$$

Suppose that X_j, the jth observation, is the suspected outlier. Then, we calculate the absolute difference of X_j from the mean $\bar{X}$:

Copyright ASME International
Provided by IHS under license with ASME
No reproduction or networking permitted without license from IHS
Not for Resale

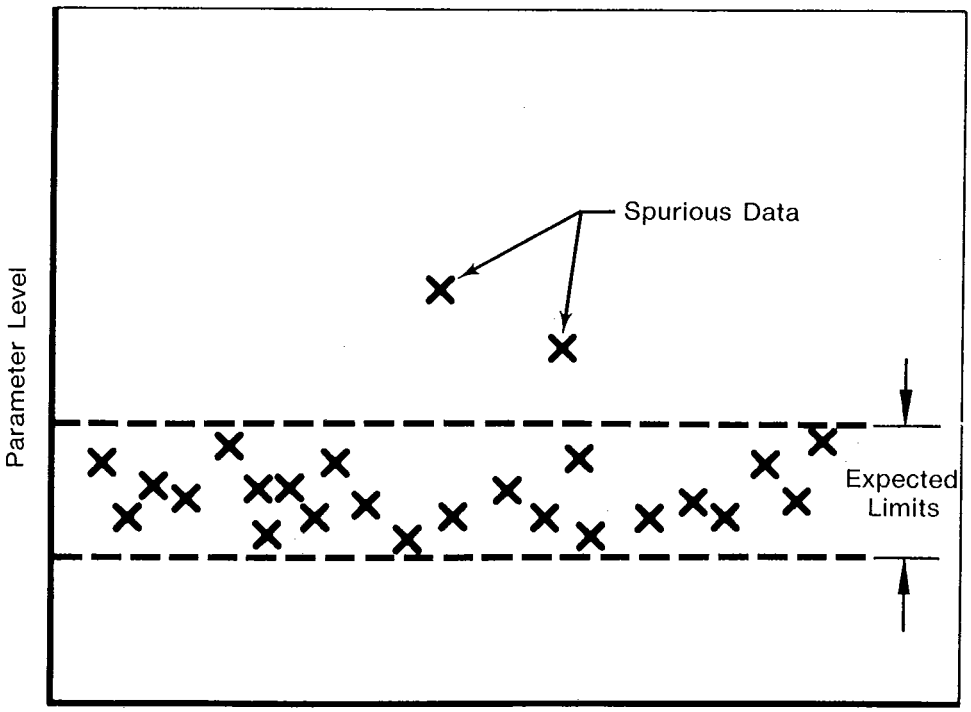

FIG. C1 OUTLIERS OUTSIDE THE RANGE OF ACCEPTABLE DATA

$$\delta = |X_j - \bar{X}|$$

Using Table C1, a value of τ is obtained for the sample size N and the significance level P. Usually, we select a P of 5%. This limits the probability of rejecting a good point to 5%. (The probability of not rejecting a bad data point is not fixed. It will vary as a function of sample size.)

The test for the outlier is to compare the difference δ with the product of the table τ and the calculated S^*.

If δ is larger than or equal to (τ, S^*), we call X_j an outlier.

If δ is smaller than (τ, S^*), we say X_j is not an outlier.

C3 GRUBBS' METHOD

Calculate the mean $\bar{X}$ and standard deviation S of N measurements.

$$\bar{X} = \sum_{i=1}^{N} \frac{X_j}{N} \quad \text{and} \quad S = \sqrt{\frac{\sum_{i=1}^{N} (X_j - \bar{X})^2}{N - 1}}$$

Suppose that X_j, the jth observation, is the suspected outlier. Then, we calculate the statistic:

$$T_n = \left| \frac{X_j - \bar{X}}{S} \right|$$

If T_n exceeds a value from Table C2 for sample size N and significance level P, the point is an outlier and is rejected from the sample.

Copyright ASME International
Provided by IHS under license with ASME
No reproduction or networking permitted without license from IHS
Not for Resale

TABLE C1 REJECTION VALUES FOR THOMPSON'S TAU

Sample Size	Level of Significance			
N	P = 10%	5%	2%	1%
3	1.3968	1.4099	1.41352	1.414039
4	1.559	1.6080	1.6974	1.7147
5	1.611	1.757	1.869	1.9175
6	1.631	1.814	1.973	2.0509
7	1.640	1.848	2.040	2.142
8	1.644	1.870	2.087	2.207
9	1.647	1.885	2.121	2.256
10	1.648	1.895	2.146	2.294
11	1.648	1.904	2.166	2.324
12	1.649	1.910	2.183	2.348
13	1.649	1.915	2.196	2.368
14	1.649	1.919	2.207	2.385
15	1.649	1.923	2.216	2.399
16	1.649	1.926	2.224	2.411
17	1.649	1.928	2.231	2.422
18	1.649	1.931	2.237	2.432
19	1.649	1.932	2.242	2.440
20	1.649	1.934	2.247	2.447
21	1.649	1.936	2.251	2.454
22	1.649	1.937	2.255	2.460
23	1.649	1.938	2.259	2.465
24	1.649	1.940	2.262	2.470
25	1.649	1.941	2.264	2.475
26	1.648	1.942	2.267	2.479
27	1.648	1.942	2.269	2.483
28	1.648	1.943	2.272	2.487
29	1.648	1.944	2.274	2.490
30	1.648	1.944	2.275	2.493
31	1.648	1.945	2.277	2.495
32	1.648	1.945	2.279	2.498
∞	1.64485	1.95996	2.32634	2.57582

C4 MONTE CARLO SIMULATION COMPARISON

A Monte Carlo simulator was designed to compare Thompson's τ and Grubbs' Method outlier tests. The comparison was made on the basis of two criteria:

(*1*) percentage of good points rejected as outliers

(*2*) percentage of actual outliers detected.

To evaluate the tests by the above criteria, a sample of $N - 1$ data points was selected from a table of normal random numbers, $N(0.1)$. Then, an "outlier" (a point K standard deviations from the population mean) was added to the sample and the two tests applied. If a test discarded the outlier, the "correct" counter was indexed. If a good point was discarded, the "incorrect" counter was indexed. Then, another sample was drawn. The simulation was performed 100 times for each value of K.

The sets of 100 simulations were repeated using fixed differences ranging from 2.5 to 5 standard deviations from the average. Samples of $N - 1$ equal to 4, 9, and 39 were simulated. Figures C2 and C3 illustrate

Copyright ASME International
Provided by IHS under license with ASME
No reproduction or networking permitted without license from IHS
Not for Resale

TABLE C2 REJECTION VALUES FOR GRUBBS' METHOD

Sample Size	Level of Significance		
N	*P* = 5%	*P* = 2.5%	*P* = 1%
3	1.15	1.15	1.15
4	1.46	1.48	1.49
5	1.67	1.71	1.75
6	1.82	1.89	1.94
7	1.94	2.02	2.10
8	2.03	2.13	2.22
9	2.11	2.21	2.32
10	2.18	2.29	2.41
11	2.23	2.36	2.48
12	2.29	2.41	2.55
13	2.33	2.46	2.61
14	2.37	2.51	2.66
15	2.41	2.55	2.71
16	2.44	2.59	2.75
17	2.47	2.62	2.79
18	2.50	2.65	2.82
19	2.53	2.68	2.85
20	2.56	2.71	2.88
21	2.58	2.73	2.91
22	2.60	2.76	2.94
23	2.62	2.78	2.96
24	2.64	2.80	2.99
25	2.66	2.82	3.01
30	2.75	2.91	...
35	2.82	2.98	...
40	2.87	3.04	...
45	2.92	3.09	...
50	2.96	3.13	...
60	3.03	3.20	...
70	3.09	3.26	...
80	3.14	3.31	...
90	3.18	3.35	...
100	3.21	3.38	...

the results. The solid curves show the probability of rejecting the single outlier. The dashed lines show the probability of rejecting a good point instead of the outlier. Note that every sample had one outlier.

As shown in Fig. C2, Thompson's τ was able to distinguish a larger proportion of the outliers closer to the sample average than Grubbs' Method. However, the large number of good values rejected might prohibit its use. For this reason, we recommend that Thompson's τ be used only for flagging possible outliers. The following example illustrates this point.

C5 EXAMPLE

Table C3 is a sample of 40 values. Suspected outliers are 334 and -555 (underlined).

If Thompson's τ and Grubbs' Method are applied, automatically eliminating one outlier at a time until no more outliers are rejected, the results of Table C4 are obtained.

Copyright ASME International
Provided by IHS under license with ASME
No reproduction or networking permitted without license from IHS
Not for Resale

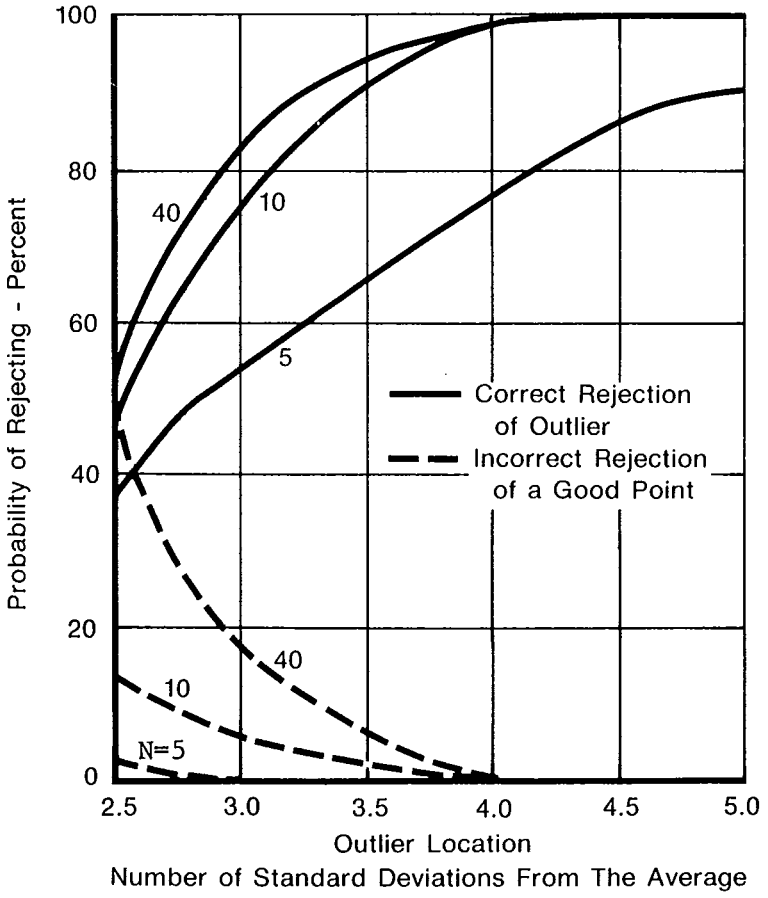

FIG. C2 α, β ERROR IN THOMPSON'S OUTLIER TEST (BASED ON 1 OUTLIER IN EACH OF 100 SAMPLES OF SIZES 5, 10, AND 40)

Copyright ASME International
Provided by IHS under license with ASME
No reproduction or networking permitted without license from IHS
Not for Resale

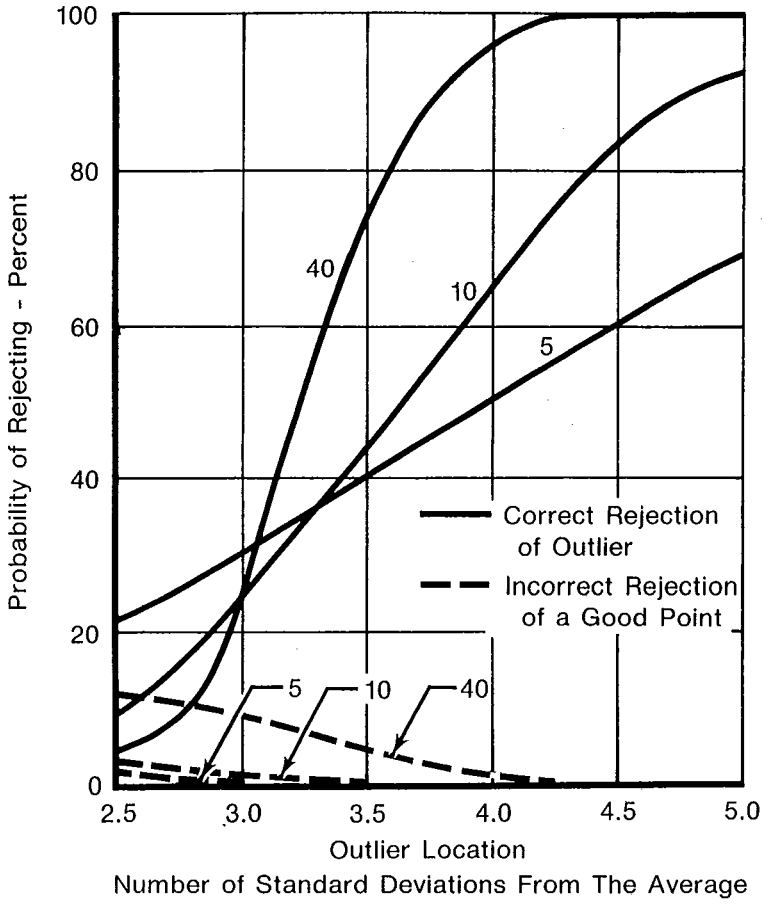

FIG. C3 α, β ERROR IN GRUBBS' OUTLIER TEST (BASED ON 1 OUTLIER IN EACH OF 100 SAMPLES OF SIZES 5, 10, AND 40)

TABLE C3 SAMPLE VALUES

26	79	58	24	1	−103	−121	−220
−11	−137	120	124	129	−38	25	−60
148	−52	−216	12	−56	89	8	−29
−107	20	9	−40	40	2	10	166
126	−72	179	41	127	−35	334	−555

TABLE C4 RESULTS OF APPLYING THOMPSON'S τ AND GRUBBS' METHOD

	Thompson's τ		Grubbs'		
Suspected Outlier	Calculated δ	Table τ $P = 5$	Calculated T_n	Table T_n $P = 5$	Sample Size (N)
−555	3.95	1.96	4.00	2.87	40
334	2.91	1.96	2.95-Stop	2.86	39
−220	2.33	1.96	2.36	2.85	38
−216	2.51-Stop	1.96	...	...	37
179	1.91	1.96	...	...	36

Copyright ASME International
Provided by IHS under license with ASME
No reproduction or networking permitted without license from IHS
Not for Resale

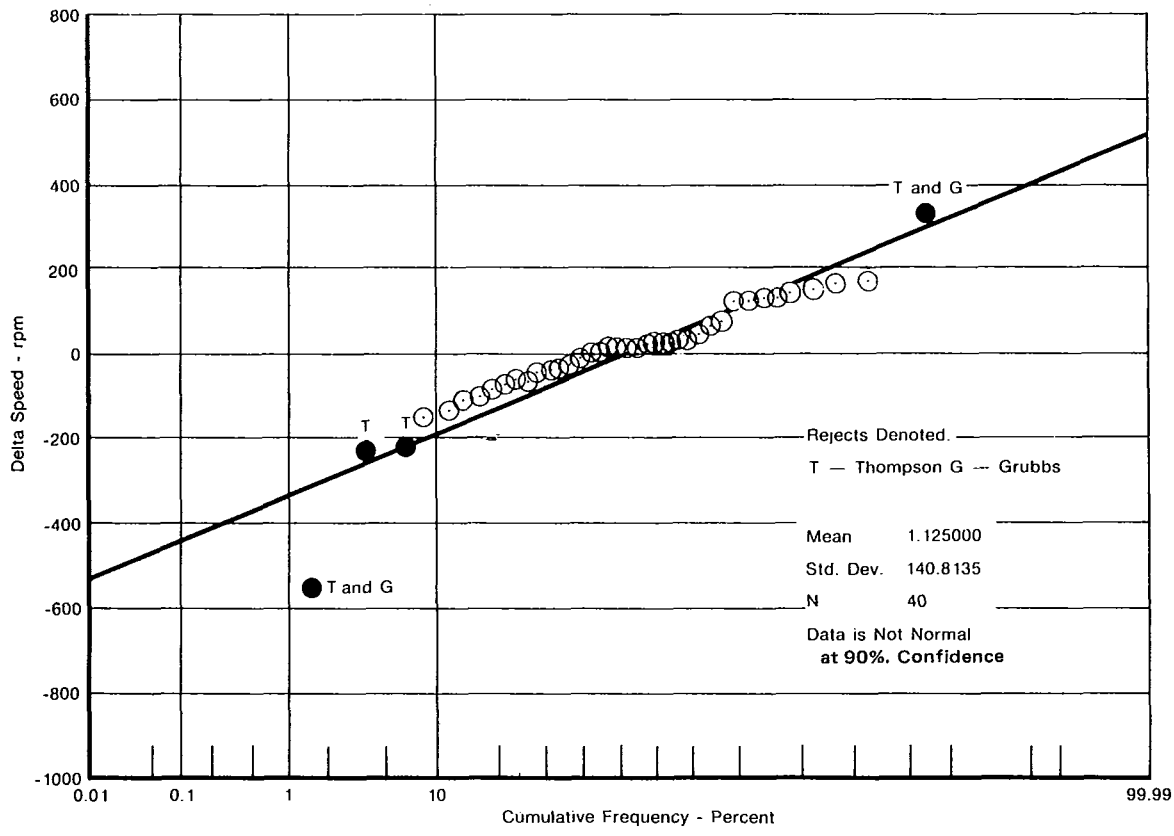

FIG. C4 RESULTS OF OUTLIER TESTS

Figure C4 is a normal probability plot of Table C4 data with the suspected outliers indicated. In this case, the engineer involved agreed that the -555 and 334 readings were outliers, but that -220 and -216 eliminated by Thompson's τ should not be eliminated from the sample.

C6 REFERENCES

Thompson, W. R. 1935. On a Criterion for the Rejection of Observations and the Distribution of the Ratio of the Deviation to Sample Standard Deviation. Annals of Mathematical Statistics 6:214-219.

Grubbs, F. E. 1969. Procedures for Detecting Outlying Observations in Samples. Technometrics 11, no. 1:1-21.

Copyright ASME International
Provided by IHS under license with ASME
No reproduction or networking permitted without license from IHS
Not for Resale

APPENDIX D – STUDENT'S *t* TABLE

The table of Student's *t* distribution (Table D1) presents the two-tailed 95% *t* values for the degrees of freedom from 1 to 30. Above 30, round the value to 2.0.

The table is used to provide an interval estimate of the true value about an observed value. The interval is the measurement plus and minus the standard deviation of the observed value times the *t* value (for the degrees of freedom of that standard deviation):

$$\text{interval} = \text{measurement} \pm t_{95} S$$

The 95% Student's *t* value for a standard deviation of 50 with 17 degrees of freedom is 2.110. The interval is

$$\text{measurement} \pm 2.11 \times 50 = \text{measurement} \pm 105.50$$

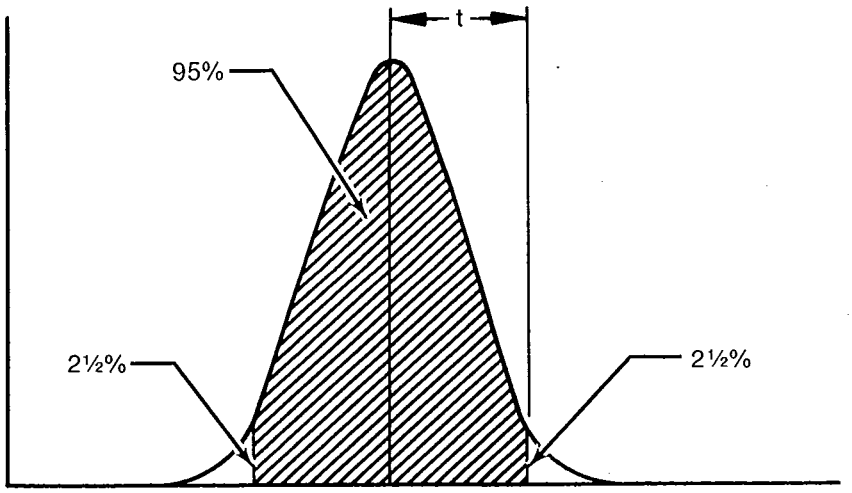

TABLE D1 TWO-TAILED STUDENT'S *t* TABLE

Degrees of Freedom	*t*	Degrees of Freedom	*t*
1	12.706	17	2.110
2	4.303	18	2.101
3	3.182	19	2.093
4	2.776	20	2.086
5	2.571	21	2.080
6	2.447	22	2.074
7	2.365	23	2.069
8	2.306	24	2.064
9	2.262	25	2.060
10	2.228	26	2.056
11	2.201	27	2.052
12	2.179	28	2.048
13	2.160	29	2.045
14	2.145	30	2.042
15	2.131	31 or more use 2.0	
16	2.120		

Copyright ASME International
Provided by IHS under license with ASME
No reproduction or networking permitted without license from IHS
Not for Resale