ASME MFC-1M–2003
[Revision of ASME MFC-1M–1991 (R1997)]

GLOSSARY OF TERMS USED IN THE MEASUREMENT OF FLUID FLOW IN PIPES

AN AMERICAN NATIONAL STANDARD



The American Society of Mechanical Engineers

Copyright ASME International
Provided by IHS under license with ASME
No reproduction or networking permitted without license from IHS

Not for Resale

Copyright ASME International
Provided by IHS under license with ASME
No reproduction or networking permitted without license from IHS
Not for Resale

The American Society of Mechanical Engineers

AN AMERICAN NATIONAL STANDARD

GLOSSARY OF TERMS USED IN THE MEASUREMENT OF FLUID FLOW IN PIPES

ASME MFC-1M–2003
[Revision of ASME MFC-1M–1991 (R1997)]

Copyright ASME International
Provided by IHS under license with ASME
No reproduction or networking permitted without license from IHS
Not for Resale

Date of Issuance: November 10, 2003

The 2003 edition of this Standard is being issued with an automatic addenda subscription service. The use of addenda allows revisions made in response to public review comments or committee actions to be published as necessary. This Standard will be revised when the Society approves the issuance of a new edition.

ASME issues written replies to inquiries concerning interpretations of technical aspects of this Standard. Interpretations are published on the ASME Web site under the Committee Pages at http://www.asme.org/codes/ as they are issued.

ASME is the registered trademark of The American Society of Mechanical Engineers.

This code or standard was developed under procedures accredited as meeting the criteria for American National Standards. The Standards Committee that approved the code or standard was balanced to assure that individuals from competent and concerned interests have had an opportunity to participate. The proposed code or standard was made available for public review and comment that provides an opportunity for additional public input from industry, academia, regulatory agencies, and the public-at-large.

ASME does not "approve," "rate," or "endorse" any item, construction, proprietary device, or activity.

ASME does not take any position with respect to the validity of any patent rights asserted in connection with any items mentioned in this document, and does not undertake to insure anyone utilizing a standard against liability for infringement of any applicable letters patent, nor assumes any such liability. Users of a code or standard are expressly advised that determination of the validity of any such patent rights, and the risk of infringement of such rights, is entirely their own responsibility.

Participation by federal agency representative(s) or person(s) affiliated with industry is not to be interpreted as government or industry endorsement of this code or standard.

ASME accepts responsibility for only those interpretations of this document issued in accordance with the established ASME procedures and policies, which precludes the issuance of interpretations by individuals.

No part of this document may be reproduced in any form,
in an electronic retrieval system or otherwise,
without the prior written permission of the publisher.

The American Society of Mechanical Engineers
Three Park Avenue, New York, NY 10016-5990

Copyright © 2003 by
THE AMERICAN SOCIETY OF MECHANICAL ENGINEERS
All rights reserved
Printed in U.S.A.

Copyright ASME International
Provided by IHS under license with ASME
No reproduction or networking permitted without license from IHS

Not for Resale

CONTENTS

Foreword iv
Standards Committee Roster v
Correspondence With the MFC Committee vi

1 General 1

2 General Terms in Fluid Mechanics 1

3 Uncertainties 5

4 General Terms Related to Flowmeters 10

5 Quantity Meter 11

6 Rate Meter 13

7 Other Types of Meters 22

Figures

1 Bias in a Random Process 6
2 Correlation Coefficients 7
3 Examples of Rotary Displacement Meters 11
4 Piston Provers 12
5 Bell Prover 13
6 Liquid Displacement System 14
7 Piezometer Ring 14
8 Orifice Plates 15
9 Nozzles 16
10 Classical Venturi Tube 16
11 Sonic Venturi Nozzle: Smith and Maltz Type 17
12 Sonic Venturi Nozzle: LMEF Type 17
13 Primary and Secondary at Same Elevation, Preferred Installation 20
14 Three Valve Manifold, Schematic 21
15 Details, Block Valve Interference 22
16 Principle of Operation of the Cross-Correlation Ultrasonic Meter 23
17 Principle of Operation of the Doppler Ultrasonic Meter 23
18 Example of a *K* Factor Curve 23

Table

1 Symbols 2

Indexes

Numerical 25
Alphabetical 28

Copyright ASME International
Provided by IHS under license with ASME
No reproduction or networking permitted without license from IHS
Not for Resale

FOREWORD

The greatest aid to communications, whether verbal or written, is a common vocabulary. Even within a single technical discipline, the same word can have different meanings to different people. In order to help overcome this obstacle in the field of fluid flow measurement, this document consists of a collection of terms and their definitions so that a common base of reference is available — we can speak a common language.

In the preparation of this Standard, an attempt has been made to standardize suitable terms and not to perpetuate unsuitable ones merely because they have been used in the past. Self-evident and irrelevant terms have been excluded, as have those terms that are unique to methods of measurement not widely used in the United States. Also, excluded from this document are those terms that have special meaning only to a particular meter type, and those terms that refer to the analysis of the final measurement.

The draft for international standard vocabulary and symbols concerning the measurement of fluid flow in closed conduits prepared by ISO/TC30/SC6 has been used as the basic reference source. In addition, many other reference sources, both national and international, were used in order to make this glossary as useful as possible to a broad segment of the measurement community.

The first edition of this Standard was approved by the American National Standards Institute on October 15, 1979. It was subsequently reaffirmed, without change, on August 7, 1986.

The previous edition of this Standard was approved by the American National Standards Institute (ANSI) on March 27, 1991. It was subsequently reaffirmed, without change, on April 22, 1997.

Suggestions for improvement of this Standard are welcome. They should be sent to Secretary, ASME MFC Standards Committee, Three Park Avenue, New York, NY 10016-5990.

This edition of the Standard was approved by the American National Standards Institute on September 10, 2003.

Copyright ASME International
Provided by IHS under license with ASME
No reproduction or networking permitted without license from IHS
Not for Resale

ASME MFC COMMITTEE
Measurement of Fluid Flow in Closed Conduits

(The following is the roster of the Committee at the time of approval of this Standard.)

STANDARDS COMMITTEE OFFICERS

Z. D. Husain, *Chair*
R. J. DeBoom, *Vice Chair*
R. L. Crane, *Secretary*

STANDARDS COMMITTEE PERSONNEL

C. J. Blechinger, Consultant
R. W. Caron, Visteon Corp.
G. P. Corpron, Consultant
R. L. Crane, *Secretary,* The American Society of Mechanical Engineers
R. J. DeBoom, *Vice Chair,* Consultant
P. G. Espina, Controlotron Corp.
D. Faber, Badger Meter, Inc.
R. H. Fritz, Saudi Aramco
F. D. Goodson, Daniel Measurement and Control
Z. D. Husain, *Chair,* ChevronTexaco
E. H. Jones, Jr., *Alternate,* ChevronTexaco
C. G. Langford, Cullen G. Langford, Inc.
W. M. Mattar, Invensys/Foxboro Co.
G. E. Mattingly, National Institute of Standards and Technology
D. R. Mesnard, Direct Measurement Corp.
R. W. Miller, R. W. Miller and Associates, Inc.
A. M. Quraishi, American Gas Association
B. K. Rao, Consultant
W. F. Seidl, Colorado Engineering Experiment Station, Inc.
T. M. Kegel, *Alternate,* Colorado Engineering Experiment Station, Inc.
D. W. Spitzer, Copperhill and Pointer, Inc.
R. N. Steven, McCrometer
D. H. Strobel, Consultant
J. H. Vignos, Consultant
D. E. Wiklund, Rosemount, Inc.
D. C. Wyatt, Wyatt Engineering

SUBCOMMITTEE 1 — GLOSSARY OF TERMS

Z. D. Husain, *Chair,* ChevronTexaco
R. L. Crane, *Secretary,* The American Society of Mechanical Engineers
F. D. Goodson, Daniel Measurement and Control
G. E. Mattingly, National Institute of Standards and Technology
R. N. Steven, McCrometer
D. E. Wiklund, Rosemount, Inc.
D. C. Wyatt, Wyatt Engineering

Copyright ASME International
Provided by IHS under license with ASME
No reproduction or networking permitted without license from IHS
Not for Resale

CORRESPONDENCE WITH THE MFC COMMITTEE

General. ASME Standards are developed and maintained with the intent to represent the consensus of concerned interests. As such, users of this Standard may interact with the Committee by requesting interpretations, proposing revisions, and attending committee meetings. Correspondence should be addressed to:

Secretary, MFC Standards Committee
The American Society of Mechanical Engineers
Three Park Avenue
New York, NY 10016-5990

Proposing Revisions. Revisions are made periodically to the Standard to incorporate changes that appear necessary or desirable, as demonstrated by the experience gained from the application of the Standard. Approved revisions will be published periodically.

The Committee welcomes proposals for revisions to this Standard. Such proposals should be as specific as possible, citing the paragraph number(s), the proposed wording, and a detailed description of the reasons for the proposal, including any pertinent documentation.

Interpretations. Upon request, the MFC Committee will render an interpretation of any requirement of the Standard. Interpretations can only be rendered in response to a written request sent to the Secretary of the MFC Standards Committee.

The request for interpretation should be clear and unambiguous. It is further recommended that the inquirer submit his/her request in the following format:

Subject:	Cite the applicable paragraph number(s) and the topic of the inquiry.
Edition:	Cite the applicable edition of the Standard for which the interpretation is being requested.
Question:	Phrase the question as a request for an interpretation of a specific requirement suitable for general understanding and use, not as a request for an approval of a proprietary design or situation. The inquirer may also include any plans or drawings that are necessary to explain the question; however, they should not contain proprietary names or information.

Requests that are not in this format will be rewritten in this format by the Committee prior to being answered, which may inadvertently change the intent of the original request.

ASME procedures provide for reconsideration of any interpretation when or if additional information that might affect an interpretation is available. Further, persons aggrieved by an interpretation may appeal to the cognizant ASME Committee or Subcommittee. ASME does not "approve," "certify," "rate," or "endorse" any item, construction, proprietary device, or activity.

Attending Committee Meetings. The MFC Committee regularly holds meetings, which are open to the public. Persons wishing to attend any meeting should contact the Secretary of the MFC Standards Committee.

Copyright ASME International
Provided by IHS under license with ASME
No reproduction or networking permitted without license from IHS
Not for Resale

GLOSSARY OF TERMS USED IN THE MEASUREMENT OF FLUID FLOW IN PIPES

1 GENERAL

1.1 Scope

This Standard consists of a collection of definitions of those terms that pertain to the measurement of fluid flow in pipes. Only those terms of general usage have been included. Terms having unique meaning when applied to specific meters should be included in a glossary within the specific flowmeter standard.

1.2 Organization

This Standard is organized so that all of the terms peculiar to a particular method of fluid measurement are collected together in a separate section. Terms pertaining to basic fluid flow concepts and properties are defined in para. 2. Terms pertaining to the estimate of uncertainty of a flow rate measurement are defined in para. 3. General terms applying to flowmeters are defined in para. 4. Terms relating to specific types of flowmeters are defined in paras. 5, 6, and 7. Symbols normally applied to various quantities are tabulated in Table 1.

1.3 References

This Standard was compiled from many sources, including various reports and standards from The American Society of Mechanical Engineers (ASME), The American Gas Association (AGA), the American Petroleum Institute (API), the Instrument Society of America (ISA), the British Standards Institute (BSI), and the International Organization for Standardization (ISO).

2 GENERAL TERMS IN FLUID MECHANICS

2.1 Base Pressure

A specified reference pressure to which a fluid volume at flowing conditions is reduced for the purpose of billing and transfer accounting. [It is generally taken as 14.73 psia (101.560 kPa) by the gas industry in the United States.]

2.2 Base Temperature

A specified reference temperature to which a fluid volume at flowing conditions is reduced for the purpose of billing and transfer accounting. [It is generally taken as 60°F (15.56°C) by the gas industry in the United States.]

2.3 Base Volume

Volume of a fluid at base pressure and temperature.

2.4 Cavitation

The implosion of vapor bubbles formed after flashing when the local pressure rises above the vapor pressure of the liquid. See also *flashing* (para. 2.8).

2.5 Coanda Effect

Effect that occurs when a jet of fluid adheres to a nearby solid surface.

2.6 Doppler Effect

Apparent change in the frequency of radiation due to relative motion between a primary or secondary source and the observer.

2.7 Dynamic Pressure

The increase in pressure above the static pressure that results from the complete isentropic transformation of the kinetic energy of the fluid into potential energy. It is equal to the product $\frac{1}{2}\rho v^2$, where ρ is the fluid density and v is the fluid velocity.

2.8 Flashing

The formation of vapor bubbles in a liquid when the local pressure falls to or below the vapor pressure of the liquid, often due to local lowering of pressure because of an increase in the liquid velocity. See also *cavitation* (para. 2.4).

2.9 Flow Conditioner

General term used to describe any one of a variety of devices intended to reduce swirl and/or to regulate the velocity profile.

2.9.1 Flow Straightener. Flow conditioner inserted in a pipe to eliminate or reduce swirl.

2.9.2 Profile Regulator. Flow conditioner inserted in a pipe to reduce the straight length required to achieve fully developed velocity distribution.

2.10 Flow Rate

The quantity of fluid flowing through a cross section of a pipe per unit of time.

Copyright ASME International
Provided by IHS under license with ASME
No reproduction or networking permitted without license from IHS
Not for Resale

Table 1 Symbols

Quantity	Symbol	Dimensions [Note (1)]	Corresponding SI Units
Fluid Mechanics			
Area of venturi nozzle throat	A^*	L^2	m^2
Radial acceleration	a_r	LT^{-2}	m/sec^2
Transverse acceleration	a_t	LT^{-2}	m/sec^2
Discharge coefficient, $C = \alpha/E$	C	...	...
Mechanical stiffness — spring constant	C	MT^{-2}	kg/sec^2
Real gas critical flow coefficient for one-dimensional real gas flow	C_R	...	
Critical flow function for one-dimensional isentropic flow of a real gas	C_{Ri}	...	...
Critical flow function for one-dimensional isentropic flow of a perfect gas	C_{*i}	...	...
Concentration of the tracer [Note (2)]	c	ML^{-2}	kg/m^3
Specific heat capacity at constant pressure	c_p	$L^2T^{-2}\Theta^{-1}$	J/(K·kg)
Specific heat capacity at constant volume	c_v	$L^2T^{-2}\Theta^{-1}$	J/(K·kg)
Diameter, under operating conditions: — of the circular cross section of the conduit — of the measuring conduit upstream of an orifice plate or nozzle — of the inlet cylinder of a classical venturi tube	D	L	m
Orifice diameter or throat of primary elements at operating conditions or diameter of the head of a Pitot tube	d	L	m
Velocity of approach factor, $E = (1 - \beta^4)^{-1/2}$	E	...	...
Coriolis force	F_c	MLT^{-2}	Kg/sec^2
Natural frequency	f_R	T^{-1}	1/sec
Acceleration of gravity	g	LT^{-2}	m/s^2
Equivalent uniform roughness	k	L	m
Length	l	L	m
Molecular mass	M	M	kg/kg·mole
Mach number	Ma (or M)	...	...
Total oscillating mass	m	M	kg
Oscillating mass of measuring tube(s)	m_t	M	kg
Oscillating mass of fluid within the tube(s)	m_{fl}	M	kg
Dilution rate (or ratio)	N	...	...
Number of cyles	N_c	...	...
Absolute stagnation pressure of the gas at nozzle inlet	P_o	$ML^{-1}T^{-2}$	Pa
Absolute static pressure of the fluid	p	$ML^{-1}T^{-2}$	Pa
Mass flow rate	q_m	MT^{-1}	kg/s
Volume flow rate	q_v	L^3T^{-1}	m^3/s
Radius	R	L	m
Universal gas constant	R	$L^2T^{-2}\Theta^{-1}$	J/(kg·mole·K)
Reynolds number	Re	...	...
Reynolds number of upstream conduit referred to D	Re_D	...	...
Reynolds number of upstream conduit referred to d	Re_d	...	...
Hydraulic radius	R_h	L	m
Velocity profile correction factor	S	...	...
Strouhal number	St	...	...
Fluid absolute temperature	T	Θ	K
Period of the tube oscillation	T_f	T	sec
Time	t	T	sec
Time window	t_w	...	...
Mean axial velocity	U	LT^{-1}	m/s
Average spatial velocity	V	LT^{-1}	m/s
Volume of fluid within the tube(s)	V_{fl}	L^3	m^3
Local velocity of the fluid	v	LT^{-1}	m/s
Nondimensional (relative) velocity	v^*	...	...
Differential pressure ratio, $x = \Delta p/p_1$	x	...	...
Acoustic ratio, $X = x/\kappa$	X	...	...
Compressibility factor	Z	...	...
Flow coefficient	α	...	...

Copyright ASME International
Provided by IHS under license with ASME
No reproduction or networking permitted without license from IHS
Not for Resale

Table 1 Symbols (Cont'd)

Quantity	Symbol	Dimensions [Note (1)]	Corresponding SI Units
Diameter ratio, $\beta = d/D$	β	...	...
Ratio of the specific heat capacities, $\gamma = c_p/c_v$	γ	...	...
Differential pressure	Δp	$ML^{-1}T^{-2}$	Pa
Expansibility (expansion) factor	ϵ	...	...
Dynamic viscosity of the fluid	μ (or η)	$ML^{-1}T^{-1}$	Pa·s
Fluid temperature in degrees Celsius	θ	Θ	°C
Isentropic exponent	κ	...	...
Kinematic viscosity of the fluid, $\nu = \mu/\rho$	ν	L^2T^{-1}	m^2/s
Mass density of the fluid	ρ	ML^{-3}	kg/m^3
Density of fluid at operating conditions	ρ_{fl}	ML^{-3}	kg/m^3
Pressure ratio, $\tau = p_2/p_1 = 1 - x$	τ	...	...
Included angle of the divergent	ϕ	...	rad
Uncertainties			
Bias limit	B	...	...
Sample size	N	...	...
Arithmetic mean of normal distribution	m	...	...
Correlation coefficient	r	...	...
Precision index	S	...	...
Sample standard deviation	S	...	...
Standard error of the mean	$S_{\bar{x}}$	...	...
Standard error of estimate (residual standard deviation)	SEE	...	...
Student's t-distribution	t	...	...
Two-tailed Student's t	t_{95}	...	...
Average value	$\bar{X}$	...	...
Uncertainty interval	U	...	...
Confidence coefficient; confidence level	$1 - \alpha$	...	...
Bias	β	...	...
Total error	δ	...	...
Accuracy of the volume measurement	ϵ_v	...	...
Accuracy of the mass measurement	ϵ_m	...	...
Accuracy of the density measurement	ϵ_ρ	...	...
Standard deviation	σ	...	...
Superscript			
Value at the nozzle throat at critical flow	*	...	...
Subscripts			
Stagnation property	0	...	...
Upstream of the primary element	1	...	...
Downstream of the primary element	2	...	...
Isentropic	i	...	...
Mass	m	...	...
Pressure	p	...	...
Volume	v	...	...
Critical flow	*	...	...

NOTES:

(1) Fundamental dimensions: M = mass; L = length; T = time; Θ = temperature.

(2) The concentration can also be expressed as dimensionless.

Copyright ASME International
Provided by IHS under license with ASME
No reproduction or networking permitted without license from IHS
Not for Resale

2.10.1 Base Flow Rate. The flow rate calculated from flowing conditions to base conditions of pressure and temperature.

2.10.2 Mass Flow Rate, q_m. The rate of flow of fluid mass through a cross section of a pipe.

2.10.3 Volume Flow Rate, q_v. The rate of flow of fluid volume through a cross section of a pipe.

2.11 Gage Pressure

The difference between the local absolute pressure of the fluid and the atmospheric pressure at the place of the measurement.

2.12 Hydraulic Diameter

The ratio of four times the cross-sectional area of the flow to the wetted perimeter. For a filled circular pipe, the hydraulic diameter is equal to the inside diameter of the pipe.

2.13 Isentropic Exponent, κ

Ratio of the relative variation of pressure to the corresponding relative variation of mass density under elementary reversible adiabatic (isentropic) transformation conditions. Often, this ratio is assumed constant over the chosen integration interval, and for an ideal gas is equal to the ratio of the specific heat capacities.

2.14 Laminar Flow

Flow under conditions where forces due to viscosity are more significant than forces due to inertia. Flow conditions where adjacent fluid particles move along essentially parallel paths.

NOTE: This flow in a pipe follows the Poiseuille law.

2.15 Mach Number, *Ma* or *M*

The ratio of the fluid velocity to the velocity of sound in the fluid at the same temperature and pressure.

2.16 Nondimensional (Relative) Velocity, v^*

Ratio of the flow velocity at a given point to a reference velocity measured at the same time, which may be the velocity at a particular point (for example, the centerline velocity) or the mean axial fluid velocity.

2.17 Pipe

A tube, usually circular in cross section, used for conveying a fluid. A closed conduit.

2.17.1 Irregularity (of a Pipe). Any element or configuration that differs from a straight length.

2.17.2 Pipe Roughness. The internal surface finish of the pipe characterized by the height of surface irregularities.

2.17.3 Straight Length. A portion of a pipe whose axis is straight, and in which the cross-sectional area and cross-sectional shape are constant.

2.18 Pulsating Flow of Mean Constant Flow Rate

Flow in which the flow rate varies with time, but for which the mean flow rate is constant when it is averaged over a sufficiently long period of time.

NOTE: Two types of pulsating flow are found: periodic pulsating flow and fluctuating (random) pulsating flow.

2.19 Ratio of the Specific Heat Capacities, γ

The ratio of the specific heat capacity at constant pressure to the specific heat capacity at constant volume. This ratio varies with changes in gas temperature and/or pressure.

2.20 Reynolds Number, *Re*

A dimensionless parameter expressing the ratio between inertia and viscous forces. It is given by the formula:

$$Re = Vl/\nu$$

where

V = average spatial fluid velocity
l = characteristic dimension of the system in which the flow occurs
ν = kinematic viscosity of the fluid

NOTE: When specifying a Reynolds number, one should indicate the characteristic dimension on which it has been based [e.g., diameter of the pipe, diameter of the differential pressure device (orifice or throat), and diameter of Pitot tube].

2.20.1 Meter Bore Reynolds Number. The meter bore Reynolds number is a dimensionless ratio of inertial to viscous forces that is used as a correlating parameter that combines the effects of viscosity, density, and pipe line velocity. It is defined as

$$Re_D = \frac{DU_\rho}{\mu}$$

2.20.2 Throat Reynolds Number. The Reynolds number where quantities are those at the throat.

2.21 Stagnation Pressure

Also known as *total pressure*; the pressure corresponding to that obtained when bringing the fluid to a standstill without any increase in entropy.

2.22 Stagnation Temperature of a Gas

The temperature that would exist in the gas if the flowing gas stream were brought to rest by an adiabatic process. Only the value of the absolute stagnation temperature is used in this Standard.

Copyright ASME International
Provided by IHS under license with ASME
No reproduction or networking permitted without license from IHS

Not for Resale

2.23 Static Pressure

The pressure of a fluid that is independent of the kinetic energy of the fluid.

2.24 Static Temperature of a Gas

The actual temperature of the flowing gas. Only the value of the absolute static temperature is used in this Standard.

2.25 Steady Flow

Flow in which the flow rate in a measuring section is constant with the measurement uncertainty and over the time period of interest, aside from variations related to natural turbulence generated within the pipe.

NOTE: The steady flows observed in pipes are, in practice, flows in which quantities such as velocity, pressure, mass, density, and temperature vary in time about mean values that are independent of time; these are actually *statistically steady flows*.

2.26 Strouhal Number, *St*

The Strouhal number, in this Standard, is a dimensionless parameter that is relevant to characterizing flowmeters having a cyclic output such as a turbine meter or vortex shedding device. For vortex meters, the Strouhal number relates the measured vortex shedding frequency to the velocity and the strut characteristic dimension. It is given by

$$St = \frac{fL}{U}$$

where

f = frequency
U = velocity
L = characteristic length

NOTE: In practice, the K factor replaces the Strouhal number as the significant parameter.

2.27 Total Pressure

Also known as *stagnation pressure*; sum of the static pressure and the dynamic pressure. It characterizes the state of the fluid when its kinetic energy is completely transformed into potential energy.

2.28 Transition Flow

Flow between a laminar flow and turbulent flow.

NOTE: For a transition flow, the Reynolds number referred to the pipe diameter is generally between a lower limit of 2,000 and an upper limit that varies between 4,000 and 12,000 according to the pipe roughness and other factors.

2.29 Turbulent Flow

Flow under conditions where forces due to inertia are more significant than forces due to viscosity. Flow conditions where adjacent fluid particles do not move along essentially parallel paths.

2.30 Unsteady Flow

Flow in which the flow rate deviates from a constant outside the measurement uncertainty and over the time period of interest, aside from variations related to natural turbulence generated within the pipe.

2.31 Velocity Distribution

2.31.1 Flow Profile. Graphic representation of the velocity distribution.

2.31.2 Fully Developed Velocity Distribution. A velocity distribution, in a straight length of pipe, that has zero radial and azimuthal fluid velocity components and an axisymmetric axial velocity profile that is independent of axial position along the pipe.

2.31.3 Swirling Flow. Flow that has axial and circumferential velocity components.

3 UNCERTAINTIES

3.1 Accuracy

The degree of freedom from error; the degree of conformity of the indicated value to the true value of the measured quantity.

3.2 Average Value, $\overline{X}$

The arithmetic mean of N readings; the average value is calculated as

$$\overline{X} = \text{average value} = \frac{\sum_{i=1}^{N} X_i}{N}$$

3.3 Bias, β

The difference between the average of all possible measured values and the true value; the systematic error or fixed error that characterizes every member of a set of measurements (see Fig. 1).

3.4 Bias Limit, B

The estimate of the upper limit of the true bias error, δ.

3.5 Bias of Estimator

The deviation of the expectation of an estimator of a parameter from the true value of this parameter. This expression may also be used in a wider sense to designate the noncoincidence of the expectation of an estimator with the true value of the parameter.

3.6 Calibration

The experimental determination of the relationship between the quantity being measured and the device that measures it, usually by comparison with a standard. Also, the act of adjusting the output of a device to bring it to a desired value, within a specified tolerance, for a particular value of the input.

Copyright ASME International
Provided by IHS under license with ASME
No reproduction or networking permitted without license from IHS
Not for Resale

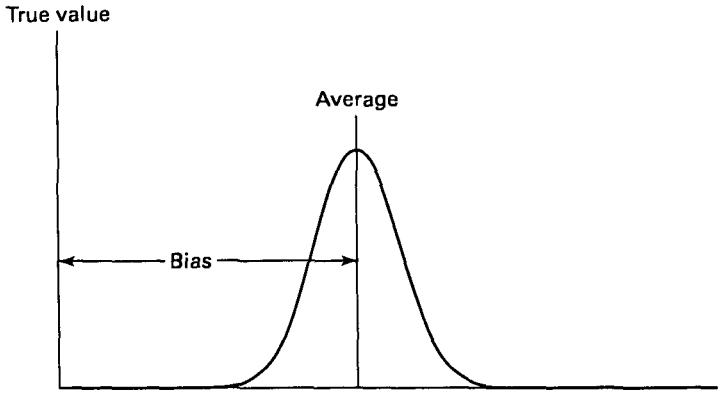

Fig. 1 Bias in a Random Process

3.7 Calibration, End-to-End

An end-to-end calibration applies a known input or standard pressure to the transducer for the measurand and records the system response through the data acquisition and data reduction systems.

3.8 Calibration Hierarchy

The chain of calibrations that link or trace a measuring instrument to recognized national or international standards.

3.9 Confidence Coefficient; Confidence Level

The value $1 - \alpha$ of the probability associated with a confidence interval or a statistical tolerance interval. [See *coverage* (para. 3.12) and *statistical confidence interval* (para. 3.48).]

3.10 Control Chart

Control chart is a chart on which limits are drawn and on which are plotted values of any statistic computed from successive samples of a production. The statistics that are used (mean, range, percent defective, etc.) define the different kinds of control charts.[1]

3.11 Correlation Coefficient, *r*

A measure of the linear interdependence between two variables. It varies between −1 and +1, with the intermediate value of zero indicating the absence of correlation. The limiting values indicate perfect negative (inverse) or positive correlation (see Fig. 2).

3.12 Coverage

The percentage frequency that an interval estimate of a parameter contains the true value. Ninety-five-percent confidence intervals provide 95% coverage of the true value. That is, in repeated sampling when a 95% confidence interval is constructed for each sample, over the long run the intervals will contain the true value 95% of the time.

3.13 Degrees of Freedom, ν

A sample of N values is said to have N degrees of freedom, and a statistic calculated from it is also said to have N degrees of freedom. But if k functions of the sample values are held constant, the number of degrees of freedom is reduced by k. For example, the statistic

$$\sum_{i=1}^{N} (X_i - \overline{X})^2$$

where $\overline{X}$ is the sample mean, is said to have $N - 1$ degrees of freedom. The justification for this is that

(a) the sample mean is regarded as fixed, or

(b) in normal variation, the N quantities $(X_i - \overline{X})$ are distributed independently of $\overline{X}$ and hence may be regarded as $N - 1$ independent variates or N variates connected by the linear relation $\Sigma\ (X_i - \overline{X}) = 0$.

3.14 Elemental Error

The bias and/or precision error associated with a single source or process in a chain of sources or processes.

3.15 Estimate

A value calculated from a sample of data as a substitute for an unknown population constant. For example, the sample standard deviation, S, is the estimate that describes the population standard deviation, σ.

3.16 Estimator

A statistic intended to estimate a population parameter.[1]

3.17 Frequency Distribution

The relationship between the values of a characteristic (variable) and their absolute or relative frequencies. The distribution is often presented as a table with special groupings (classes) if the values are measured on a continuous scale.

[1] This definition is taken from ISO 3534, Statistics — Vocabulary and Symbols (1977).

Copyright ASME International
Provided by IHS under license with ASME
No reproduction or networking permitted without license from IHS

Not for Resale

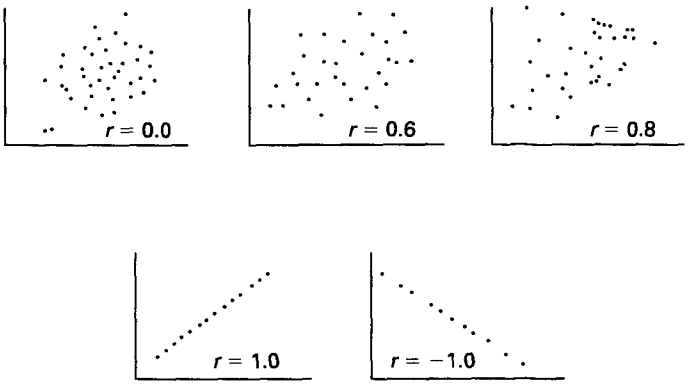

Fig. 2 Correlation Coefficients

3.18 Identical

Differing by less than the uncertainty interval for the measurements. It is assumed that every reasonable effort is made to eliminate significant bias and precision errors.

3.19 Joint Distribution Function

A function describing the simultaneous distribution of two variables.

3.20 Laboratory Standard (Standard)

An instrument that is traceable to a national or international reference standard.

3.21 Mathematical Model

A mathematical description of a system. It may be a formula, a computer program, or a statistical model.

3.22 Measurement Error

The collective term meaning the difference between the true value and the measured value. Includes both bias and precision error. [See *accuracy* (para. 3.1) and *uncertainty interval* (para. 3.63).] Accuracy implies small measurement error and small uncertainty.

3.23 Method of Least Squares

Technique used to compute the coefficients of the equation when a particular form of equation is chosen for fitting a curve to data. The principle of the method of least squares is the minimization of the sum of squares of deviations of the data from the curve. [See *regression* (para. 3.37).]

3.24 Multiple Measurement

More than a single concurrent measurement of the same parameter.

3.25 Normal Distribution

Also known as the *Laplace–Gauss distribution;* probability distribution of a continuous random variable x such that the probability density is

$$f(x) = \frac{1}{\sigma\sqrt{2\pi}} \exp\left[-\frac{1}{2}\left(\frac{x-m}{\sigma}\right)^2\right]$$

where

m = arithmetic mean
σ = standard deviation of the normal distribution

3.26 Observed Value

The value of a characteristic determined as the result of an observation or test.

3.27 One-Sided Confidence Interval

When T is a function of the observed values such that, θ being a population parameter to be estimated, the probability $Pr\ (T \leq \theta)$ or the probability $Pr\ (T \geq \theta)$ is equal to $1 - \alpha$ (where $1 - \alpha$ is a fixed number, positive, and less than 1), the interval from the smallest possible value of θ up to T, or the interval between T and the greatest possible value of θ, is a one-sided $(1 - \alpha)$ confidence interval for θ. The limit T of the confidence interval is a random variable and as such will assume different values in every sample. In a long series of samples, the relative frequency of cases where the interval includes θ would be approximately equal to $1 - \alpha$.[1]

3.28 Parameter

An unknown quantity that may vary over a certain set of values. In statistics, it occurs in expressions defining frequency distributions (population parameters). Examples: the mean of a normal distribution; the expected value of a Poisson variable.

3.29 Population

The totality of items under consideration. Every clearly defined part of a population is called a *subpopulation.* In the case of a random variable, the probability distribution is considered as defining the population of that variable.

Copyright ASME International
Provided by IHS under license with ASME
No reproduction or networking permitted without license from IHS
Not for Resale

3.30 Population Parameter

A quantity used to describe the distribution of a characteristic in the population.

3.31 Precision

The closeness of agreement between the results obtained by applying the experimental procedure several times under prescribed conditions. The smaller the random part of the experimental errors that affect the results, the more precise is the procedure.

3.32 Precision Error

The random error observed in a set of replicated measurements. This error is the result of a large number of different effects. [See *repeatability* (paras. 3.38 and 3.39) and *reproducibility* (para. 3.40).]

3.33 Precision Index, *S*

Also known as *sample standard deviation;* the computed standard deviation of the measurements.

$$S = \sqrt{\frac{\sum_{i=1}^{N} (X_i - \overline{X})^2}{N - 1}}$$

When we combine several elemental precision indices:

$$S = \sqrt{\sum_i S_i^2}$$

3.34 Quality Control

The set of operations (programming, coordinating, carrying out) intended to maintain or to improve quality, and to set up the production at the most economical level that allows for customer satisfaction.[1]

3.35 Random Error

The component of the error of measurement that, in the course of a number of measurements of the same measurand, varies in an unpredictable way.

NOTE: It is not possible to correct for random error.

3.36 Random Uncertainty

A component of uncertainty associated with a random error. Its effect on mean values can be reduced by taking many measurements.

3.37 Regression

Process of quantifying the dependence of one variable on one or more other variables. Regression is a procedure for determining the unknown constants of a proposed model in such a manner that predictions from the model are as close as possible to the data in some way. Often *as close as possible* is taken to mean that the sum of squares of the deviations is a minimum. Many of the available computer programs suitable for curve fitting have the word *regression* in the title. For the purpose of this Standard, *regression* and *least squares* may be regarded as synonyms.

3.38 Repeatability (Qualitative)

The closeness of agreement among a series of results obtained with the same method on identical test material, under the same conditions (same operator, same apparatus, same laboratory, and short intervals of time).

NOTE: The representative parameters of the dispersion of the population that may be associated with the results are qualified by the term *repeatability.* Examples: standard deviation of repeatablity; variance of repeatability.

3.39 Repeatability (Quantitative)

The value below which the absolute difference between any two single test results obtained under same conditions, described in para. 3.38, may be expected to lie with a specified probability. In the absence of other indication, the probability is 95%.

3.40 Reproducibility (Quantitative)

The closeness of agreement between results obtained when the conditions of measurement differ; for example, with respect to different test apparatus, operators, facilities, time intervals, etc.

3.41 Sample Size, *N*

The number of observations that are to be included in the sample.

3.42 Sampling Error

Part of the total estimation error of a parameter due to the random nature of the sample.

3.43 Standard Deviation, σ

The most widely used measure of dispersion of the frequency distribution of a population. It may be shown mathematically that with a Gaussian (normal) distribution, the mean plus and minus 1.96 standard deviations will include 95% of the population.

NOTE: The precision index, *S*, calculated from a sample taken from the population, is an estimate of the standard deviation, σ.

3.44 Standard Error

The standard deviation of an estimator. The standard error provides an estimation of the random part of the total estimation error involved in estimating a population parameter from a sample.

3.45 Standard Error of Estimate, *SEE*

Also known as the *residual standard deviation;* the measure of dispersion of the dependent variable (output) about the least-squares line in curve fitting or regression analysis. It is the precision index of the output for any

Copyright ASME International
Provided by IHS under license with ASME
No reproduction or networking permitted without license from IHS

Not for Resale

fixed level of the independent variable input. The formula for calculating this is

$$SEE = \sqrt{\frac{\sum_{i=1}^{N} (y_{OBS} - y_{CAL})^2}{N - K}}$$

for a curve fit for N data points in which K constants are estimated for the curve.

3.46 Standard Error of the Mean, $S_{\bar{x}}$

An estimate of the scatter in a set of sample means based on a given sample of size N. The sample standard deviation, S, is estimated as

$$S = \sqrt{\frac{\sum_{i} (X_i - \overline{X})^2}{N - 1}}$$

Then the standard error of the mean is

$$S_{\overline{X}} = \frac{S}{\sqrt{N}}$$

In the limit, as N becomes large, the estimated standard error of the mean converges to zero, while standard deviation converges to a fixed nonzero value.

3.47 Statistic

(a) A parameter value based on data. For example, $\overline{X}$ and S are statistics. The bias limit, a judgment, is not a statistic.

(b) A function of the observed values derived from a sample.

3.48 Statistical Confidence Interval

An interval estimate of a population parameter based on data. The confidence level establishes the coverage of the interval. That is, a 95% confidence interval would cover or include the true value of the parameter 95% of the time in replicated sampling.

3.49 Statistical Quality Control

Quality control using statistical methods (such as control charts and sampling plans).

3.50 Statistical Quality Control Charts

A plot of the results of repeated sampling versus time. The central tendency and upper and lower limits are marked. Points outside the limits and trends and sequences in the points indicate nonrandom conditions.

3.51 Student's *t*-Distribution, *t*

The ratio of the difference between the population mean and the sample mean to a sample standard deviation (multiplied by a constant) in samples from a normal population. It is used to set confidence limits for the population mean. It is obtained from tables entered with degrees of freedom and risk level.

3.52 Systematic Error

A component of the error of measurement that, in the course of a number of measurements of the same measurand, remains constant or varies in a predictable way.

NOTE: Systematic errors and their causes may be known or unknown.

3.53 Systematic Uncertainty

Also known as *bias*; the error associated with systematic errors, i.e., those that cannot be reduced by increasing the number of measurements under identical conditions.

3.54 Taylor Series

A power series to calculate the value of a function at a point in the neighborhood of some reference point. The series expresses the difference or differential between the new point and the reference point in terms of the successive derivatives of the function. Its form is

$$f(x) - f(a) = \sum_{r=1}^{r=n-1} \frac{(X - a)^r}{r} f^r(a) + R_n$$

where $f^r(a)$ denotes the value of the rth derivative of $f(x)$ at the reference point $x = a$. Commonly, if the series converges, the remainder R_n is made infinitesimal by selecting an arbitrary number of terms, and usually only the first term is used.

3.55 Test

An operation made in order to measure or classify a characteristic.

3.56 Total Estimation Error

In the estimation of a parameter, the difference between the calculated value of the estimator and the true value of this parameter.

NOTE: Total estimation of error may be due to sampling error, measurement error, rounding-off of values or subdividing into classes, a bias of the estimator, and other errors.

3.57 Traceability

Property of a result of measurement whereby it can be related to appropriate standards, generally international or national standards, through an unbroken chain of comparisons. In the United States, the unbroken chain of comparison is with the standards at the NIST or at the State Agency of Weights and Measures.

NOTE: Measurements have traceability if and only if scientifically rigorous evidence is produced on a continuing basis to show that the measurement process is producing measurement results (i.e., data) for which the total measurement uncertainty is quantified.

Copyright ASME International
Provided by IHS under license with ASME
No reproduction or networking permitted without license from IHS
Not for Resale

3.58 Transducer

A device for converting mechanical, thermal, or other stimulation into an electrical signal, and vice versa. It is used to measure quantities such as pressure, temperature, and force.

3.59 Transfer Standard

A laboratory instrument that is used to calibrate working standards and that is periodically calibrated against the laboratory standard.

3.60 True Value

The value that characterizes a quantity perfectly defined in the conditions that exist at the moment when that quantity is observed (or the subject of a determination). It is an ideal value that could be arrived at only if all causes of measurement error were eliminated and the population was infinite.

3.61 Unbiased Estimator

An estimator of a parameter such that its expectation equals the true value of this parameter.

3.62 Uncertainty (of Measurement)

The range within which the true value of the measured quantity can be expected to lie with a specified probability and confidence level.

3.63 Uncertainty Interval, U

An estimate of the error band, centered about the measurement, within which the true value must fall with a specified probability.

3.64 Variance, σ^2

A measure of dispersion based on the mean square deviation from the arithmetic mean. Specifically, it is the square of the precision index.

3.65 Working Standard

An instrument that is calibrated in a laboratory against an interlab or transfer standard and is used as a standard in calibrating measuring instruments.

4 GENERAL TERMS RELATED TO FLOWMETERS

4.1 Drain Holes

Holes drilled through the pipe wall to facilitate the removal from the metered fluid of undesirable solid particles or fluids with densities greater than that of the metered fluid.

4.2 Flowmeter

A device for measuring the quantity or rate of flow of a moving fluid in a pipe. It may consist of a primary device and a secondary device.

4.2.1 Flowmeter Primary Device. Device generating a signal or signals responding to the flow from which the flow rate may be inferred.

4.2.2 Flowmeter Secondary Device. Device that receives a signal from the primary device and displays, records, and/or transmits it as a measure of the flow rate.

4.3 Flow Rate Range

The range of flow rates bounded by the minimum and maximum flow rates.

4.3.1 Maximum Flow Rate. The highest flow rate at which the meter can operate satisfactorily as specified by the manufacturer.

4.3.2 Minimum Flow Rate. The lowest flow rate at which the meter will operate within the maximum error limits specified by the manufacturer.

4.4 Measuring Point

Any point where the local velocity of the flow is measured.

4.5 Pressure Loss (Caused by a Primary Device)

The difference between the upstream pressure and the pressure downstream of the meter after recovery.

4.6 Primary Velocity Measuring Device

Any device that changes a local flow velocity into a physical quantity suitable for measurement (e.g., differential pressure, frequency of an electric signal).

4.7 Proving

The determination of meter performance by the determination of the relationship between the volume actually passed through the meter and the volume indicated by the meter.

4.8 Rangeability (Turndown)

Flowmeter rangeability is the ratio of the maximum to minimum flowrates or Reynolds number in the range over which the meter meets a specified uncertainty (accuracy).

4.9 Reversible Meter

A meter that may be operated in a direction contrary to the normal direction of flow with the accuracy staying within the maximum permissible error limits.

4.10 Velocity Profile Correction Factor, S

A dimensionless factor based on measured knowledge of the velocity profile used to adjust the meter output.

4.11 Vent Holes

Holes drilled through the pipe wall to facilitate the removal from the metered liquid of undesirable vapor

Copyright ASME International
Provided by IHS under license with ASME
No reproduction or networking permitted without license from IHS

Not for Resale

or fluids with densities lighter than that of the metered liquid.

4.12 Working Pressure (Flowing Pressure)

Static pressure of the fluid immediately upstream of the primary device. For some meters, working pressure is measured downstream of or within the meter.

4.13 Working Temperature (Flowing Temperature)

The temperature of the fluid immediately upstream of the primary device. For some meters, working temperature is measured downstream of or within the meter.

5 QUANTITY METER

The terms defined in this section relate to flowmeters in which the flow is separated into known isolated quantities that are separately counted to determine the total volume passed through the meter. An independent measurement of time is necessary to determine flow rate.

5.1 Diaphragm Meter

A flowmeter having three or four measuring compartments separated by two or more movable partitions, called diaphragms, attached to the case by an impervious flexible material so that each partition may have a reciprocating motion. This motion of the diaphragms also operates the valves that control the flow of gas into and out of the meter.

5.2 Liquid-Sealed Drum

A flowmeter consisting of rigid measuring compartments mounted on a shaft such that successive compartments are filled and emptied when the drum is rotated within an exterior casing that is filled with a sealing fluid.

5.3 Nutating Disk

Also known as a *fluid flowmeter*; a flowmeter consisting of a disk mounted in a circular chamber with a conical roof and either a flat or conical floor. The motion of the disk, which is called *nutating*, is such that the shaft on which it is mounted generates a cone with the apex down. Rotation of the disk on its own axis is prevented by a radial slot that fits about a radial partition extending in from the chamber sidewall nearly to the center. The inlet and outlet openings are in the sidewall of the chamber on either side of the partition.

5.4 Reciprocating Piston

A flowmeter consisting of one or more pistons reciprocating in one or more fixed chambers or cylinders.

5.5 Rotary Meter

Inferential flowmeter comprising a vane-type anemometer that is placed in the fluid stream.

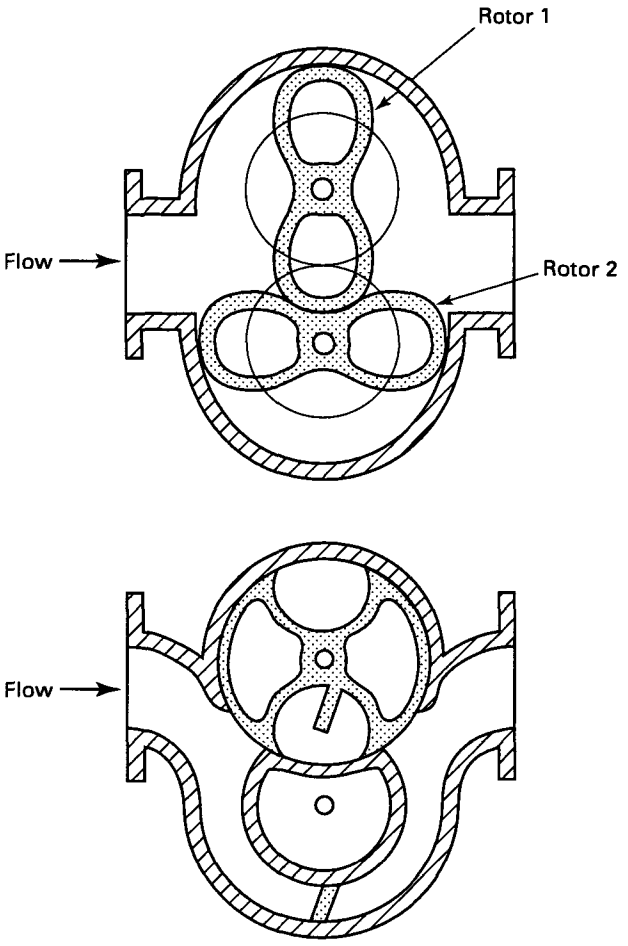

Fig. 3 Examples of Rotary Displacement Meters

5.5.1 Rotary Positive Displacement Meter (Lobed Impeller). A flowmeter consisting of two rotors or impellers, each with two or more lobes mounted so as to rotate with almost rolling contact, in a manner similar to gears. The inner surface of the case and the impeller tips have minimum clearance (see Fig. 3).

5.5.2 Rotary Positive Displacement Meter (Piston or Vane Type). A flowmeter having one or more vanes that serve as rotary or movable partitions for separating the fluid segments. The vanes must make almost wiping contact with the walls of the measuring chamber, and the axis of rotation may or may not coincide with that of the chamber. The portion of the chamber in which the fluid is measured usually includes about 270 deg. In the remaining 90 deg, the vanes are returned to the starting position by the use of an idle rotor, gear, or cam, or a radial partition.

5.6 Weighing and Volumetric Meters

5.6.1 Weighing Method. Method of measurement, suitable only for liquids, in which the flow is directed either intermittently or continuously into a container on

Copyright ASME International
Provided by IHS under license with ASME
No reproduction or networking permitted without license from IHS
Not for Resale

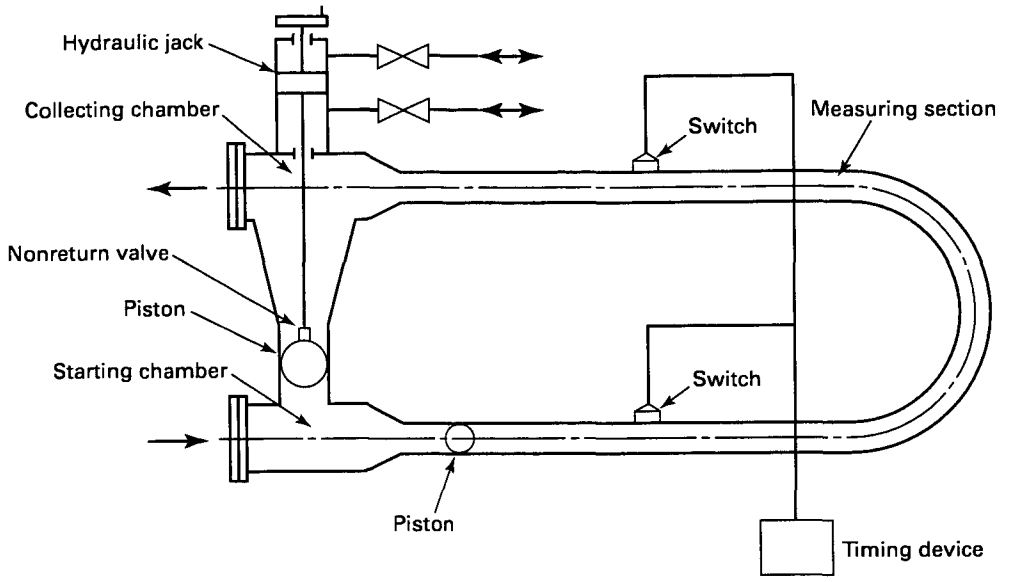

(a) Free Piston Prover

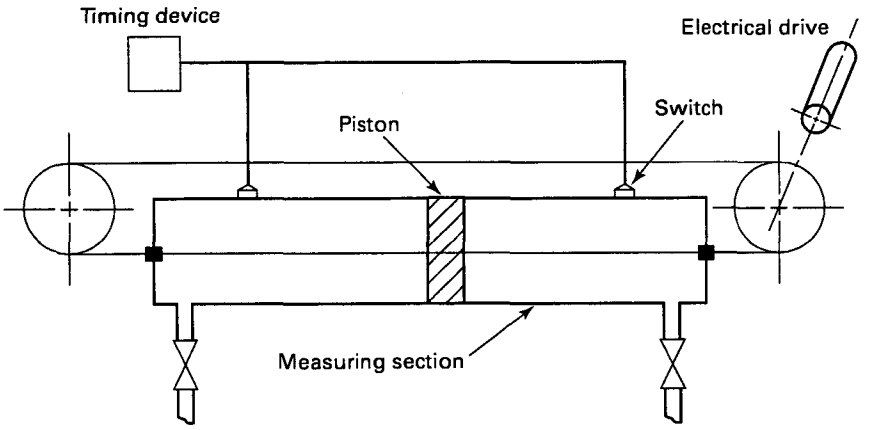

(b) Forced Piston Prover

Fig. 4 Piston Provers

the scale of a weighing machine. The flow rate is obtained by measuring the mass of liquid accumulated in a certain time.

5.6.1.1 Static Weighing. Method in which the net mass of liquid collected is deduced from tare and gross weighings made, respectively, before the flow is diverted into the weighing tank and after it is diverted to the bypass.

5.6.1.2 Dynamic Weighing. Method in which the net mass of liquid collected is deduced from weighings done while flow is directed into the weighing tank. (A diverter is not required with this method.)

5.6.1.3 Buoyancy Correction. The correction to be made to the readings of a weighing machine to account for the difference between the upward thrust exerted by the atmosphere on the liquid being weighed and on the reference masses used during the calibration of the weighing machine.

5.6.1.4 Flow Stabilizer. Structure forming part of the hydraulic system, ensuring a stable flow rate in the pipe being supplied with liquid; for example, a constant level head tank, the level of liquid that is controlled by a weir of sufficient capacity.

5.6.2 Volumetric Method. Method of measurement in which the flow is directed into or out of a calibrated volumetric tank during a certain period of time.

5.6.2.1 Piston Prover. Volumetric gaging device consisting of a section of pipe with a constant cross

Copyright ASME International
Provided by IHS under license with ASME
No reproduction or networking permitted without license from IHS
Not for Resale

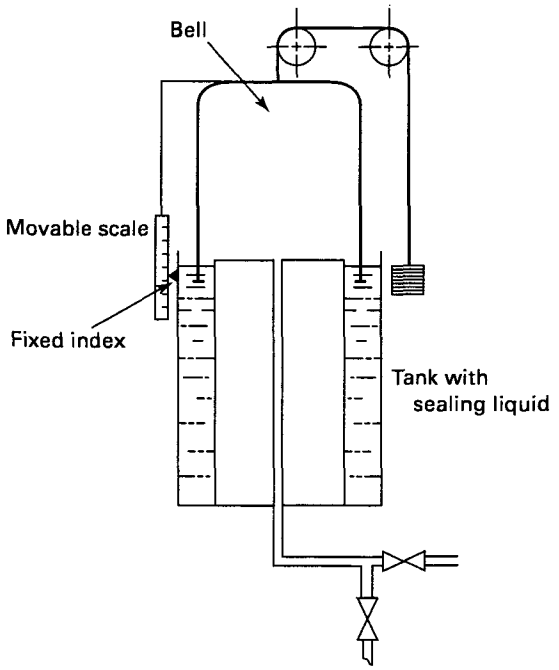

Fig. 5 Bell Prover

section and of known volume. The flow rate is derived from the time taken by a piston, with free or forced displacement, to travel through this section (see Fig. 4). When free piston is spherical shaped, the prover is also known as *ball prover.*

5.6.2.2 Bell Prover. Volumetric gaging device, used for gases, consisting of a stationary tank containing a sealing liquid into which is inserted a coaxial movable tank (the bell), the position of which may be determined. The volume of the gastight cavity produced between the movable tank and the sealing liquid may be deduced from the position of the movable tank (see Fig. 5).

5.6.2.3 Liquid Displacement System. Volumetric gaging device, used for gases, in which a volume of gas is displaced by an equal volume of liquid in a calibrated tank (see Fig. 6).

5.6.3 Diverter. A device that diverts the flow either to the weighing tank (or volumetric tank) or to its bypass without disturbing the flow rate in the circuit; its motion should be very rapid, or if not rapid, it should conform to a known law.

5.6.4 Constant Level Tank. A tank in which the level of liquid is controlled by a weir of sufficient length to ensure a stable total pressure in the circuit being supplied with liquid.

5.6.5 Volumetric Tank. A tank that will not lose its shape and the capacity of which has been determined by a primary method of calibration. This is a very elementary form of meter of limited commercial importance, although these meters are extensively used as reference standards for calibration of commercial meters.

6 RATE METER

The terms defined in this section relate to flowmeters through which the fluid does not pass in isolated (separately counted) quantities, but in a continuous stream. The quantity of flow per unit of time is derived from the interaction of the stream and the primary element by known physical laws supplemented by empirical relations. In rate meters, the functioning of the primary element depends on some property of the fluid other than, or in addition to, volume or mass. Integration with respect to time is necessary to determine quantity of fluid passed.

6.1 Differential Pressure Device

Device inserted in a pipe to create a pressure difference whose measurement, together with a knowledge of the fluid conditions and of the geometry of the device and the pipe, enables the flow rate to be calculated.

6.1.1 General Terms

6.1.1.1 Acoustic Ratio, *X*. The differential pressure ratio divided by the isentropic exponent (compressible fluid).

6.1.1.2 Annular Chamber. Piezometer ring integral with the pipe or the primary device that simplifies the construction of annular pressure taps.

6.1.1.3 Diameter Ratio (of a Primary Device Used in a Given Pipe), β. The diameter of the orifice (or throat) of the primary device divided by the inside diameter of the pipe upstream of the primary device.

6.1.1.4 Differential Pressure, Δp. The static pressure difference generated by the primary device when there is no difference in elevation between the upstream and downstream pressure taps.

6.1.1.5 Differential Pressure Ratio, *x*. The static differential pressure divided by the absolute pressure at the upstream tap.

6.1.1.6 Discharge Coefficient, *C*. Dimensionless coefficient given by the formula

$$C = \frac{\text{actual rate of flow}}{\text{theoretical rate of flow}}$$

where actual rate of flow and the theoretical rate of flow is that for an ideal fluid without any energy loss ($\epsilon = Y = 1$).

Copyright ASME International
Provided by IHS under license with ASME
No reproduction or networking permitted without license from IHS
Not for Resale

6.1.1.7 Expansion (Expansibility) Factor (for Compressible Fluid), ϵ. Dimensionless coefficient given by the formula

$$\epsilon = \frac{q_m}{\frac{\pi}{4}\alpha d^2\sqrt{2\Delta p \rho_1}}$$

where

$$\alpha = \frac{C}{\sqrt{1-\beta^4}}$$

6.1.1.8 Flow Coefficient, α. Dimensionless coefficient given in the case of a flow of fluid considered as not compressible by the formula

$$\alpha = \frac{q_m}{\frac{\pi}{4}d^2\sqrt{2\Delta p \rho_1}}$$

where

q_m = mass flow rate of the flow
d = diameter of the orifice or throat of the primary device
Δp = differential pressure
ρ_1 = mass density of the fluid upstream of the device

6.1.1.9 Lead Line. Tube or line connecting the pressure taps of the metering device to the secondary device.

6.1.1.10 Orifice (or Throat). Opening of minimum cross-sectional area in a primary device.

6.1.1.11 Piezometer Ring. A pressure equalization enclosure linking together two or more pressure taps installed on one cross section, and to which a secondary device can be connected (see Fig. 7). It can lie outside or be integral with the pipe or the primary device.

6.1.1.12 Pressure Ratio. The absolute static pressure at the low pressure tap divided by the absolute static pressure at the high pressure tap.

6.1.1.13 Pressure Taps (Piezometer Taps). A hole or annular slot in a flange, fitting or the wall of a pipe, or throat of a primary device that is flush with the inside surface.

6.1.1.13.1 Wall Taps. Annular or circular hole drilled in the wall of the pipe in such a way that its edge is flush with the internal surface of the pipe, the tap being such that the pressure within the hole is the static pressure at that point in the pipe.

6.1.1.13.2 Corner Taps. Wall pressure taps drilled on either side of an orifice plate or nozzle, with the spacing between the pressure taps and the respective faces of the plate or nozzle equal to half the diameter of the taps themselves, so that the holes break through the pipe wall flush with the faces of the plate or nozzle (see Fig. 7).

6.1.1.13.3 Flange Taps. Wall pressure taps drilled on either side of an orifice plate with their axes being 1 in. (25.4 mm) from the upstream or downstream faces of the plate, respectively.

6.1.1.13.4 Vena Contracta Taps. Wall pressure taps drilled on either side of an orifice plate, the upstream tap being located at a distance of $1D$ (D being the internal diameter of the pipe) from the upstream face of the plate, and the downstream tapping being in the cross section of minimum static pressure and therefore, at a distance downstream of the upstream face of the plate that varies with the diameter ratio.

6.1.1.13.5 D and $D/2$ Pressure Taps. Wall pressure taps drilled on either side of an orifice plate, the upstream and downstream taps being respectively located at a distance of $1D$ and $0.5D$ from the upstream face of the plate.

6.1.1.14 Primary Device (of a Differential Pressure Device). Differential pressure device with its pressure tappings.

6.1.1.15 Seal Pot. Sealing chambers containing a liquid that separates the metered fluid from the fluid in the secondary device.

6.1.1.16 Velocity of Approach Factor. Coefficient given by the formula

$$E = (1-\beta^4)^{-1/2} = \frac{D^2}{\sqrt{D^4 - d^4}}$$

where

β = diameter ratio d/D
D = pipe inside diameter
d = diameter of the primary device orifice or throat

6.1.2 Orifice Plate. A plate having a specified orifice (see Fig. 8).

6.1.2.1 Conical Entrance Orifice Plate. Orifice plate for which the junction of the upstream face and the orifice has the shape of a straight circular truncated cone.

6.1.2.2 Eccentric Orifice Plate. Thin orifice plate, the orifice of which is eccentric to the pipe axis.

6.1.2.3 Quarter Circle (Quadrant Edge) Orifice Plate. Orifice plate for which the junction of the upstream face and the orifice has the profile of a quarter circle.

6.1.2.4 Segmental Orifice Plate. Thin orifice plate, the orifice of which has the shape of a segment of a circle.

6.1.2.5 Thin Orifice Plate. A plate, the thickness of which is small in comparison to the diameter of the

Copyright ASME International
Provided by IHS under license with ASME
No reproduction or networking permitted without license from IHS

Not for Resale

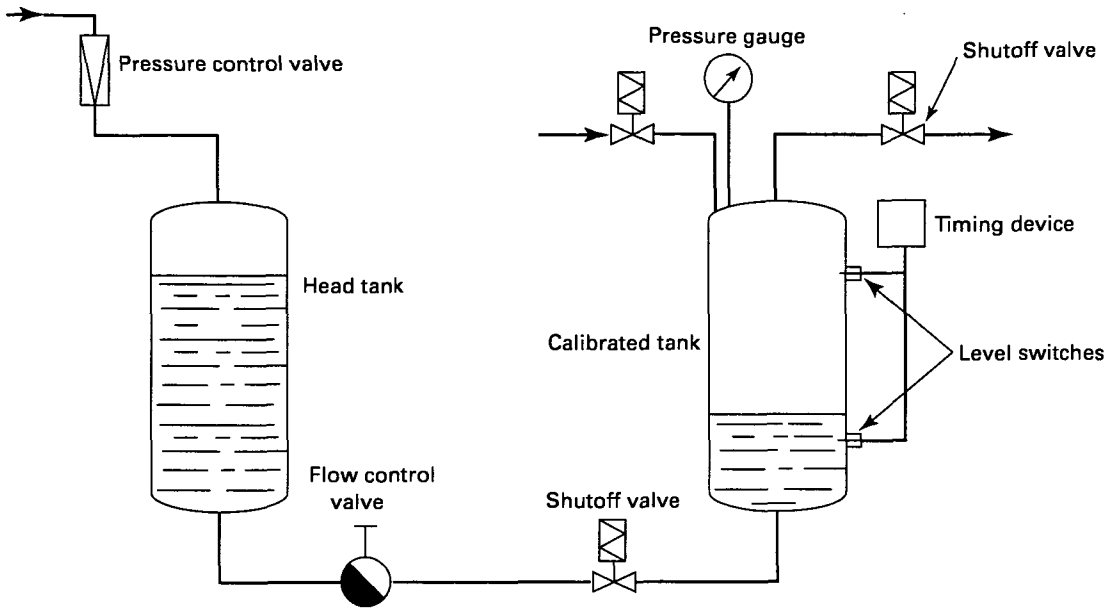

Fig. 6 Liquid Displacement System

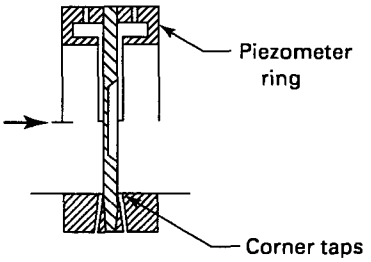

Fig. 7 Piezometer Ring

pipe, and which contains a circular orifice concentric with the pipe axis.

NOTE: For measuring flow rate in either direction, a symmetrical orifice plate can be used for which the two edges comply with the characteristics of the upstream edge, and for which the thickness of the plate does not exceed that of the orifice.

6.1.3 Orifice Fitting. The combination of an orifice plate and the conduit in which the orifice plate is mounted, including its pressure tappings.

6.1.4 Nozzle. Convergent device having a curved profile with no discontinuities leading to a throat (see Fig. 9).

6.1.4.1 ISA 1932 Nozzle. A nozzle that consists of an upstream face that is perpendicular to the throat axis, a convergent section defined by two arcs, a cylindrical throat, and a recess. ISA 1932 nozzles always have corner pressure tappings.

NOTE: ISA refers to the former International Standards Association, now the International Organization for Standardization (ISO).

6.1.4.2 Long Radius Nozzle. A nozzle that consists of an upstream face that is perpendicular to the throat axis, a convergent section whose shape is a quarter ellipse, a cylindrical throat, and a recess or a bevel.

6.1.5 Venturi Tube. Device consists of
(a) a cylindrical entrance section
(b) a converging section
(c) a cylindrical throat section
(d) a diverging section, normally conical

6.1.5.1 Classical Venturi Tube. A venturi tube with a conical convergent section. The pressure tappings are located in the entrance cylinder and in the throat (see Fig. 10).

6.1.5.2 Nozzle Venturi Tube. A venturi tube with the convergent section formed by a nozzle.

6.1.5.3 Truncated Venturi Tube. A venturi tube for which the outlet diameter of the divergent section is less than the inside diameter of the pipe in which it is inserted.

6.1.6 Elbow Meter. A differential pressure device consisting of a common pipe elbow with pressure tappings located in the inner and outer surfaces in the plane determined by the curved centerline of the elbow.

6.1.7 Critical Venturi Nozzle. A venturi nozzle for which the nozzle geometrical configuration and conditions of use are such that the flow rate is critical.

6.1.8 Throat. The minimum diameter section of the venturi nozzle.

Copyright ASME International
Provided by IHS under license with ASME
No reproduction or networking permitted without license from IHS
Not for Resale

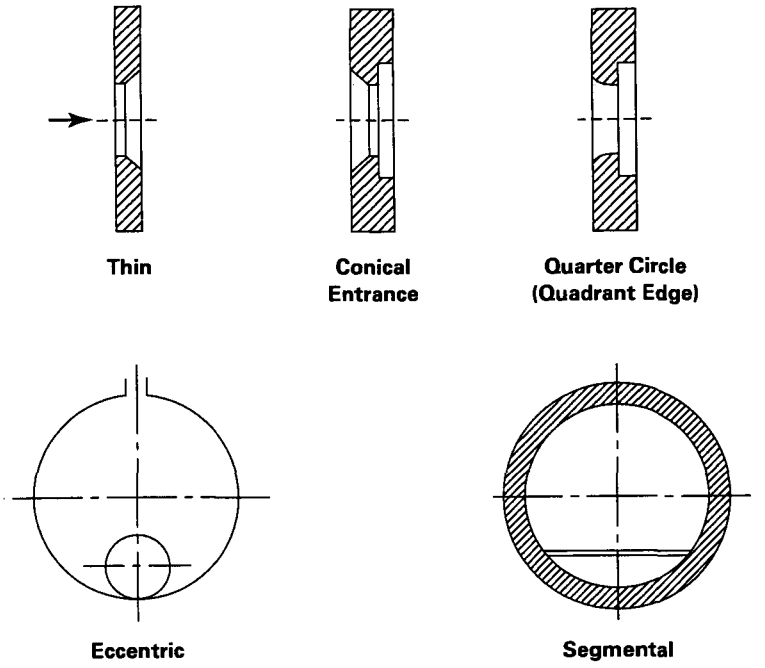

Fig. 8 Orifice Plates

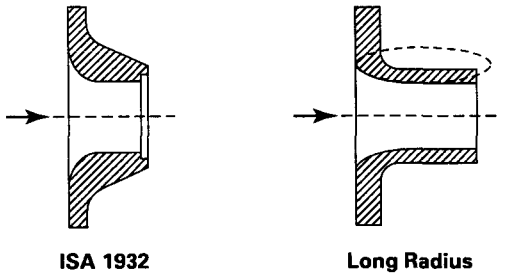

Fig. 9 Nozzles

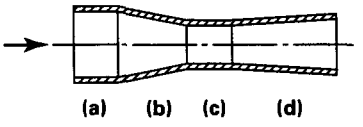

Fig. 10 Classical Venturi Tube

6.2 Critical Flow Devices

A flowmeter in which a critical flow is created through a primary differential pressure device (fluid at sonic velocity in the throat). A knowledge of the fluid conditions upstream of the primary device and of the geometric characteristics of the device and the pipe suffice for the calculation of the flow rate.

6.2.1 Choking Pressure Ratio. The ratio of the absolute nozzle exit static pressure to the absolute nozzle upstream pressure at which the flow becomes critical.

6.2.2 Critical Flow. A flow through a differential pressure device such that the ratio of the downstream to upstream absolute pressures is less than a critical value, below which the mass flow rate remains constant when the upstream fluid conditions (density and velocity distribution) are unchanged.

The maximum flow rate for a particular venturi nozzle that can exist for the given upstream conditions. When critical flow exists, the throat velocity is equal to the local value of the speed of sound (acoustic velocity), the velocity at which small pressure disturbances propagate.

6.2.3 Critical Pressure Ratio. The ratio of the absolute static pressure at the nozzle throat to the absolute stagnation pressure for which gas mass flow through the nozzle is a maximum.

6.2.4 Isentropic Perfect Gas Critical Flow Function, C_{*i}. A dimensionless function that characterizes the thermodynamic flow properties along an isentropic and one-dimensional path between inlet and throat. It is a function of the nature of the gas and of stagnation conditions.

$$C_{*i} = \sqrt{\gamma\left(\frac{2}{\gamma+1}\right)^{(\gamma+1)/(\gamma-1)}}$$

6.2.5 Isentropic Real Gas Critical Flow Function, C_{Ri}. A dimensionless function that characterizes the thermodynamic flow properties of a real gas along an isentropic one-dimensional path between the nozzle inlet and throat. It is a function of the nature of the real gas and of the stagnation conditions. The function is the isentropic perfect gas critical flow function divided by the square

Copyright ASME International
Provided by IHS under license with ASME
No reproduction or networking permitted without license from IHS

Not for Resale

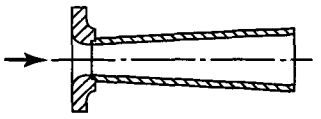

Fig. 11 Sonic Venturi Nozzle: Smith and Matz Type

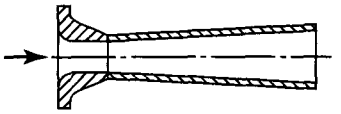

Fig. 12 Sonic Venturi Nozzle: LMEF Type

root of the compressibility factor for the real gas.

$$C_{Ri} = C_{*i} / \sqrt{Z}$$

6.2.6 Real Gas Critical Flow Coefficient, C_R. A flow coefficient defined by the equation

$$C_R = \frac{q_m \sqrt{(R/M)T_0}}{A^* P_0}$$

The real gas critical flow coefficient is often estimated by the isentropic real gas critical flow function.

6.2.7 Sonic Nozzle. A nozzle that is operating at critical flow conditions.

6.2.7.1 Sonic Venturi Nozzle: Smith and Matz Type. A venturi nozzle consisting of a circular profile convergent section and a conical divergent section (see Fig. 11).

6.2.7.2 Sonic Venturi Nozzle: LMEF Type. A venturi nozzle consisting of a circular profile convergent section, a cylindrical throat, and a conical divergent section (see Fig. 12).

6.3 Velocity Area Methods

Methods that enable the flow rate to be deduced from the measurement of local fluid velocities across a cross section of the pipe by integration of the velocity area over that section.

6.3.1 Current Meter. A device provided with a rotor, the rotational speed of which is a function of the local velocity of the surrounding fluid and the size of which is small by comparison with the size of the pipe.

6.3.1.1 Propeller-Type Current Meter. Current meter, the rotor of which is a propeller rotating around an axis approximately parallel to the flow.

6.3.1.2 Relative Velocity. The ratio of a flow velocity at a given point to a reference velocity measured at the same time. The reference velocity may be measured at a particular point (e.g., the centerline velocity) or may be the discharge velocity.

6.3.1.3 Self-Compensating Propeller. Propeller of a current meter designed in such a way that its speed of rotation is proportional to the component of the fluid velocity coaxial with the current meter throughout a large range of approach angles of the velocity vector relative to the current meter axis.

6.3.1.4 Spin Test (of a Current Meter). A test in which the rotor of a current meter is spun either with the fingers or by blowing into its axis to check that it rotates freely and uniformly.

6.3.2 Discharge Velocity. The ratio of the volume rate of flow to the area of the pipe cross section.

6.3.3 Peripheral Flow (Annular Flow). The volume flow rate of fluid in the area between the pipe wall and the contour defined by the velocity measurement points that are the closest to the wall.

6.3.4 Pitot Tube. Tubular device consisting of a cylindrical head attached perpendicularly to a stem. It is provided with one or more pressure tap holes and it is inserted into a flowing fluid, thus giving the stagnation or static pressure.

6.3.4.1 Differential Pressure (of a Pitot Tube). Difference between the pressures measured at the total pressure tap and the static pressure tap.

6.3.4.2 Pitot-Static Tube. A Pitot tube provided with static pressure tap holes drilled at specific positions on the circumference of the cylinder that is oriented parallel to the flow direction. These holes can be drilled at one or more cross sections. The total pressure tap faces the flow direction at the tip of the axisymmetric nose or head of the cylinder.

NOTE: When there is no possibility of confusion, the expression *Pitot tube* without further explanation may be used to designate a *Pitot-static tube.*

6.3.4.3 Reversible Cole Pitometer. A special type of Pitot-static tube in which the static pressure tap and total pressure tap are identical holes facing in opposite directions.

6.3.4.4 Static Pressure Tap. A set of holes in a Pitot tube positioned so as to measure the static pressure of the surrounding fluid. Also, a pressure tap drilled on the pipe wall.

6.3.4.5 Total Pressure Pitot Tube. A Pitot tube with only a total pressure tap hole.

NOTE: A total pressure Pitot tube is generally associated with a separate static pressure tap located on the pipe wall.

6.3.4.6 Total Pressure Tap. A hole in a Pitot tube enabling the measurement of the stagnation pressure of the fluid.

Copyright ASME International
Provided by IHS under license with ASME
No reproduction or networking permitted without license from IHS
Not for Resale

6.3.4.7 Stationary Rake. A set of local velocity sensors mounted on one or more fixed stems used to measure simultaneously the velocities across the measuring cross section.

6.3.4.8 Yaw Probe. A probe, fitted with several pressure tappings, which can be immersed in a flow in order to determine its direction.

6.3.5 Area Meters. Area meters are those in which a variation in the cross section of the fluid stream under constant head is used as an indication of the rate of flow. For example, a float is suspended in a vertical tapered tube and as the fluid flow rate changes, the position of the float in the tube changes.

6.3.6 Velocity Meters. Velocity meters are those meters in which the primary device consists of a means of measuring the average velocity within a known cross section.

6.3.6.1 Electromagnetic Flowmeter. A flowmeter that creates a magnetic field perpendicular to the flow, enabling the flow rate to be deduced from the induced electromotive force (emf) produced by the motion of a conducting fluid in the magnetic field.

6.3.6.1.1 Calibration Factor of the Primary Device. The number that enables the flow signal to be related to the flow rate under defined reference conditions for a given value of the reference signal.

6.3.6.1.2 Electrode Signal. The total potential difference between the electrodes, consisting of the flow signal and signals not related to flow such as in-phase, quadrature, and common mode.

6.3.6.1.2.1 Common Mode Voltage. The voltage that exists equally between each electrode and the earth.

6.3.6.1.2.2 Flow Signal. That part of the electrode signal proportional to flow rate, magnetic field strength, and distance (usually assumed as constant) between electrodes.

6.3.6.1.2.3 In-Phase Voltage. That part of the electrode signal in phase with the flow signal but which does not vary with flow rate.

6.3.6.1.2.4 Quadrature Voltage. That part of the electrode signal that is 90 deg out of phase with the flow signal.

6.3.6.1.2.5 Reference Signal. The signal proportional to the magnetic flux of the primary device that is compared in the secondary device with the flow signal.

6.3.6.1.3 Magnetic Field. The magnetic flux generated by the electromagnet in the primary device and which passes through the meter tube and flowing fluid.

6.3.6.1.4 Meter Electrodes. The two contacts by means of which the induced voltage is collected.

6.3.6.1.5 Meter Tube. The conduit section of the primary device through which the fluid to be measured flows.

6.3.6.1.6 Output Signal. The output from the secondary device that is proportional to flow rate, and in the form of a standardized transmission signal.

6.3.6.1.7 Primary Device (of an Electromagnetic Flowmeter). This device contains the following elements:

(a) a meter tube, usually electrically insulated, through which the conductive fluid to be metered flows

(b) a pair of diametrically opposed meter electrodes across which the signal generated in the fluid is measured

(c) an electromagnet for producing a time-varying magnetic field in the meter tube.

The primary device develops the electrode signal, which contains a signal proportional to the flow rate and in some cases the reference signal.

6.3.6.1.8 Secondary Device (of an Electromagnetic Flowmeter). The device that contains the circuitry that extracts the flow signal from the electrode signal and converts it to a standardized output signal directly proportional to flow rate.

6.3.6.2 Tracer Methods. Methods of measuring the flow rate that involve the injection and detection of a tracer (chemical or radioactive substance) in the flow.

6.3.6.2.1 Concentration. Mass of tracer per unit volume or mass of fluid.

6.3.6.2.2 Counting Rate (for a Radioactive Tracer). The number of impulses per unit time.

6.3.6.2.3 Dilution Methods. Methods in which the flow rate is deduced from the determination of the ratio of the dilution of the tracer injected to that of the tracer at the sampling cross section.

6.3.6.2.3.1 Constant Rate Injection Method. Method of measuring flow rate in which a tracer solution of known concentration is injected at a constant and known flow rate at one cross section of a pipe. This injection must be sustained for a period long enough to establish a steady concentration with respect to time at a second cross section downstream from the first and distant enough to produce adequate mixing. The flow rate is determined by comparing the concentration of the tracer in the second cross section with that of the injected solution.

6.3.6.2.3.2 Integration Method. A method of measuring flow rate by injecting into the pipe at a selected cross section, a known mass (or volume) of tracer. At a second selected cross section downstream and distant enough to produce adequate mixing, samples are taken over a period sufficient to allow all the tracer to pass that cross section from which the average

Copyright ASME International
Provided by IHS under license with ASME
No reproduction or networking permitted without license from IHS

Not for Resale

tracer concentration during the sampling time is determined. The mass (or volume) flow rate is equal to the mass (or volume) of tracer injected divided by the product of the sampling time and the ratio of the injected tracer concentration to the average sample concentration.

6.3.6.2.4 Dilution Rate (or Ratio), *N*. The ratio of the concentration of tracer in the injected solution to that in the sampling cross section.

6.3.6.2.5 Injection Cross Section (Station). The pipe cross section in which the tracer is injected for purpose of the measurement.

6.3.6.2.6 Measuring or Measurement Section. Length of pipe between two measurement cross sections.

6.3.6.2.7 Mixing Length. The minimum distance downstream of the injection cross section beyond which the injected solution is sufficiently distributed over a cross section to enable the flow rate to be measured to the accuracy required.

6.3.6.2.8 Sampling Cross Section (Station). A cross section of the pipe, lying downstream of the injection cross section at which samples are taken or in which concentration is directly measured.

6.3.6.2.9 Transit Time Method. Method in which the flow rate is deduced from the measurement of the time taken by the tracer to flow between two measuring cross sections.

6.3.6.2.10 Transit Time of the Tracer Cloud. The time that elapses between the detection of the first and last particle of a tracer cloud passing through a given cross section.

6.3.6.3 Turbine Meter. A turbine meter is a velocity device in which the primary device is an axial flow type turbine whose rotating member is driven by the fluid and essentially all the fluid passes through the rotating member.

6.3.6.3.1 Flowing Pressure. Static pressure of the fluid in actual operation, at the measurement section of the meter or at the plane of the turbine rotor.

6.3.6.3.2 Flowing Temperature. The temperature of the fluid in actual operation.

6.3.6.3.3 Meter Pressure Tap. The pressure tap provided and identified by the manufacturer on the meter body to enable the metering static pressure at the turbine rotor to be measured.

6.3.6.3.4 Rated Conditions. Conditions of pressure, temperature, and fluid composition as specified by the manufacturer that rates the meter.

6.3.6.4 Ultrasonic Flowmeter. A device that utilizes the travel time of acoustic pulses transmitted between upstream and downstream transducers to derive an average velocity from which the flow rate may be deduced.

6.3.6.4.1 Acoustic Matching Layer. Material comprising one or more layers, selected to maximize the acoustic coupling coefficient between two media.

6.3.6.4.2 Acoustic Path. The path that the acoustic signals follow as they propagate through the measurement section between the transducer elements.

6.3.6.4.3 Axial Flow Velocity, V_{ax}. The component of liquid flow velocity at a point in the measurement section that is parallel to the measurement section's axis and in the direction of the flow being measured.

6.3.6.4.4 Clamp-on-Meter. Flowmeter in which the transducers are fixed on the outside of the pipe in which the flow rate is to be measured.

6.3.6.4.5 Cross Flow Velocity. The component of liquid flow velocity at a point in the measurement section that is perpendicular to the measurement section's axis.

6.3.6.4.6 Gaussian Quadrature. Method of defining the optimum positions for the measuring paths and then calculating the flow rate from the individual path velocities in a multipath ultrasonic flowmeter.

6.3.6.4.7 Nonrefractive System. An ultrasonic flowmeter in which the acoustic path crosses the solid/process fluid interfaces at a right angle.

6.3.6.4.8 Phase-Shift Meter. A flowmeter that works on the principle that a phase shift occurs when sound travels in a moving medium.

6.3.6.4.9 Refractive System. An ultrasonic flowmeter in which the acoustic path crosses the solid/process fluid interfaces at other than a right angle.

6.3.6.4.10 Sing Around. Method used in ultrasonic flowmeters whereby two independent streams of pulses are transmitted in opposite directions. Each pulse is emitted immediately after the detection of the preceding pulse in the stream. The difference between the pulse repetition frequency in the two directions is measured and is a function of the fluid velocity.

6.3.6.4.11 Transit Time. The time required for an acoustic signal to traverse an acoustic path.

6.3.7 Beam-Deflection Meter. Flowmeter in which a beam emitted in a direction normal to the flow is deflected by an amount that is approximately proportional to the flow rate.

6.4 Pressure Tap Connection

Secondary instrumentation connection to pressure taps.

Copyright ASME International
Provided by IHS under license with ASME
No reproduction or networking permitted without license from IHS
Not for Resale

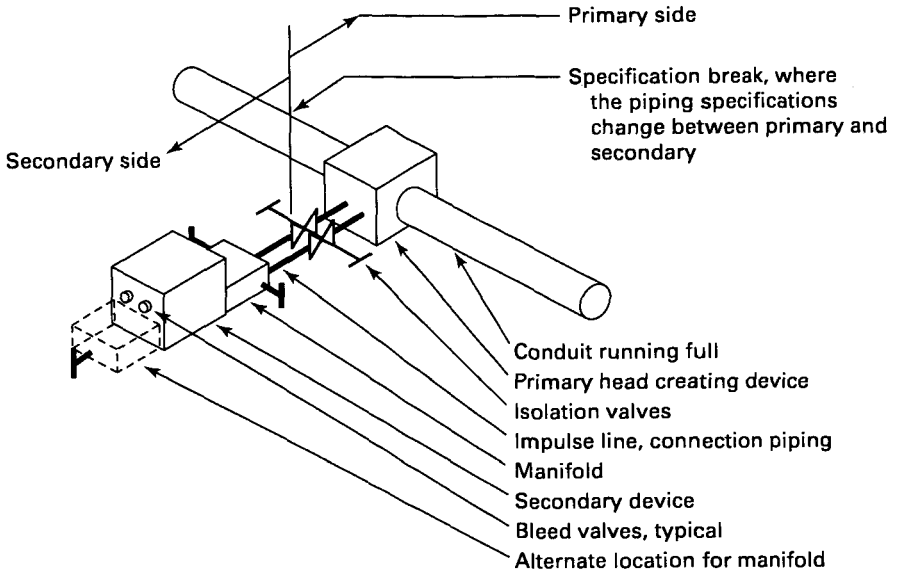

Fig. 13 Primary and Secondary at Same Elevation, Preferred Installation

6.4.1 Containment. Safe containment of the fluid requires conformance to the applicable standards and codes, and requires the selection of the proper materials of construction; the fabrication methods and practices; fittings; and any required gaskets or sealing materials.

6.4.2 Codes. The pipe or tubing installed between the primary and secondary devices must comply with applicable requirements such as national, local and owner codes, standards, and guidelines. The process piping specification determines the specifications for the block or the valve closest to the primary element. The specifications for the piping between this valve and the secondary device, and any valves in this piping, may differ. The small size, limited flow, and often the more limited temperatures involved, justifies these differences (see Fig. 13).

6.4.3 Specification Break. The break (change) in piping specifications between *process* and the *secondary* or *instrument* side is normally at the secondary end connection of the process valve (see Fig. 13). If the process piping specification requires flanged connection, then the process end of this valve is flanged and the mating flange on the secondary side is an instrument connection or may have another approved fitting.

6.4.4 Pressure Test. An approved hydrostatic pressure test may be required for piping systems to prove the integrity of the pressure-containing parts of the piping system.

6.4.5 Inspection. A visual inspection of each installation is recommended for adherence to safety and measurement requirements before putting each flowmeter into operation (see MFC-3M). Install primary per manufacturer instructions.

6.4.6 Rod Out. Some installations will require provision for *rodding out* of the process connections. This is the use of a rod or other physical device to remove materials blocking the free flow of fluid into the impulse lines. Observe the applicable safety precautions.

6.4.7 Valve Orientation. Globe-style block valves may create a pocket of gas or liquid if they are installed with the stem in the vertical orientation. This pocket may result in a pressure difference and an error in the indicated measurement. Installation with the stem at an angle of 90 deg from the vertical normally solves this problem. Ball valves and gate valves do not have this problem.

6.4.8 Manifold. Valves are often installed to permit calibrating the secondary device without removing it. These are used to block the impulse pressure lines from the primary device and to open a path between the high and low secondary device pressure taps. Where specified, two additional valves are installed to allow draining or venting of the impulse piping to the atmosphere or drain. The secondary device zero, or no flow signal, can be adjusted at operating pressure with one block valve closed and the bypass valve open. Manufactured valve manifolds may reduce cost and save space. Manifolds integrate the required valves and connections into one assembly and have connection spacing compatible with orifice flanges and the standard secondary devices (see Fig. 14). Install manifolds in the orientation specified by the manufacturer to avoid possible errors caused by pockets of trapped gas or liquid in the body.

Copyright ASME International
Provided by IHS under license with ASME
No reproduction or networking permitted without license from IHS

Not for Resale

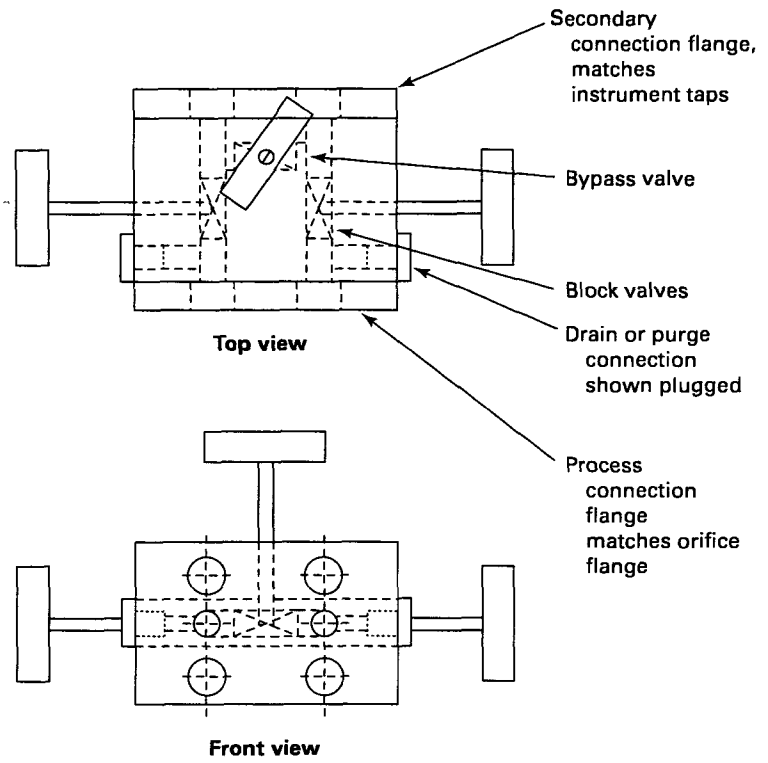

Fig. 14 Three Valve Manifold, Schematic

6.4.9 Valve Arrangement. Where the primary device uses flange taps in the smaller size pipes, it is likely that block valves and flanges will physically interfere with each other if they are mounted directly in line with the primary device pressure taps (see Fig. 15). In vertical lines, alternate flange taps can be used to avoid mechanical interference; but this practice is not encouraged. Vertical flow installation of head-type meters in vapor service is discouraged.

6.5 Mass Methods

Methods that enable the mass flow rate to be determined from the inferred measurements.

6.5.1 Coriolis Meters. A device consisting of a flow sensor (primary device) and a transmitter (secondary device), which measures the mass flow by means of the Coriolis force generated by flowing fluid through oscillating tube(s); it may also provide measurements of density and temperature.

6.5.1.1 Zero Offset. Flow measurement indicated under zero flow conditions.

6.5.1.2 Zero Stability. Maximum expected magnitude of the meter output at zero flow after the zero adjustment procedure has been completed, expressed by the manufacturer as an absolute value in mass per unit time.

6.5.1.3 Cross-Talk. If two or more Coriolis meters are to be mounted close together, interference through mechanical coupling may occur. This is often referred to as cross-talk. The manufacturer should be consulted for methods of avoiding cross-talk.

6.5.1.4 Flow Sensor (Primary Device). A mechanical assembly consisting of an oscillating tube(s), drive system, measurement sensor(s), supporting structure, flanges/fittings, and housing.

6.5.1.5 Oscillating Tube(s). A tube(s) through which the fluid to be measured flows.

6.5.1.6 Drive System. Means for inducing the oscillation of the tube(s).

6.5.1.7 Measurement Sensor. Sensor to detect the Coriolis effect and to measure the frequency of the tube oscillations.

6.5.1.8 Supporting Structure. Support for the oscillating tube(s).

6.5.1.9 Housing. Environmental protection of the flow sensor.

6.5.1.10 Secondary Containment. Housing designed to provide protection to the environment if the sensor tube(s) fails.

Copyright ASME International
Provided by IHS under license with ASME
No reproduction or networking permitted without license from IHS
Not for Resale

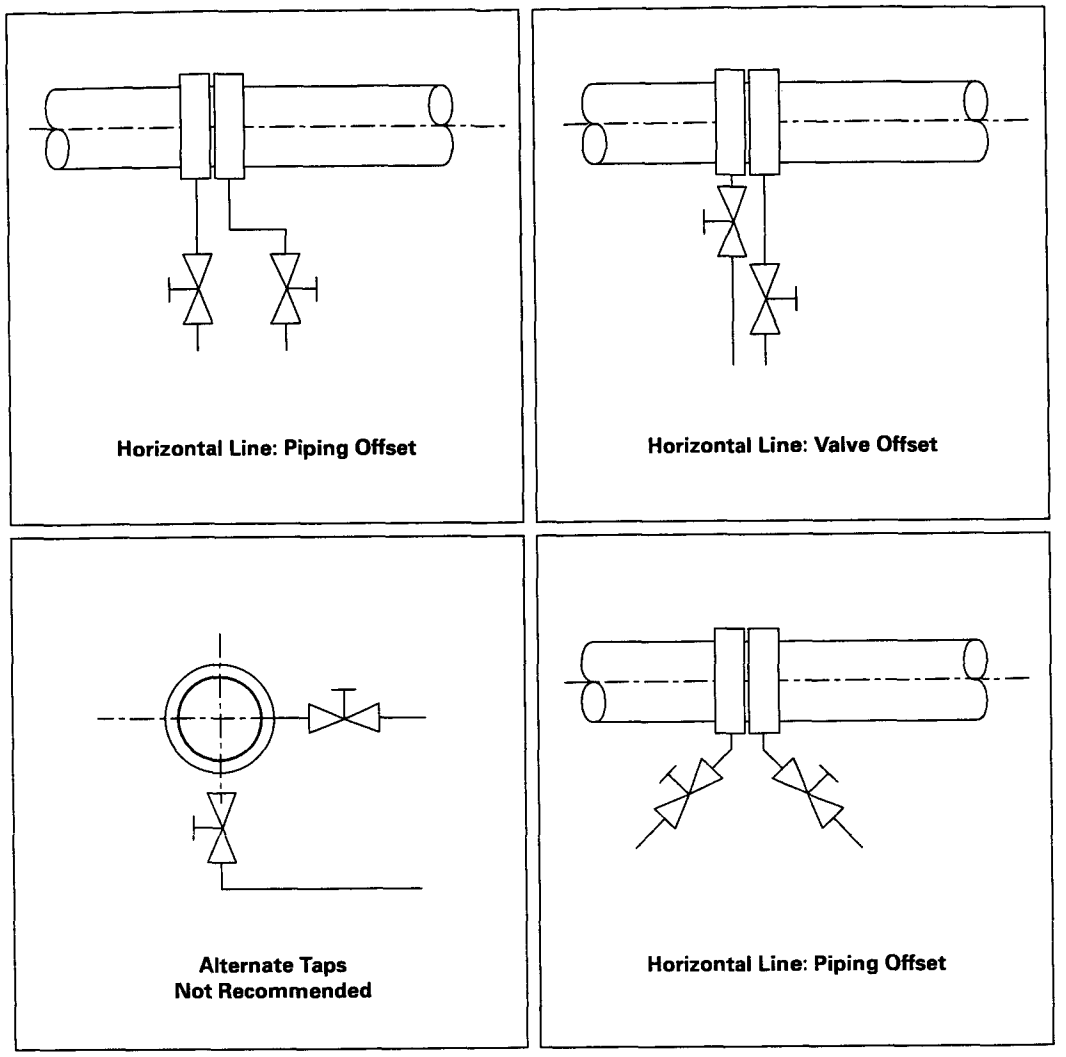

Fig. 15 Details, Block Valve Interference

6.5.1.11 Transmitter (Secondary Device). Electronic system providing the drive and transforming the signals from the flow sensor to give output(s) of measured and inferred parameters; it also provides corrections derived from parameters such as temperature.

6.5.1.12 Calibration Factor(s). Numerical factor(s), also called *flow calibration factors*, unique to each primary device and determined by flow calibration, which when programmed into the transmitter, enables the meter to perform to its stated specification.

6.5.1.13 Flow Calibration Factor(s). Calibration factor(s) associated with mass flow measurement.

6.5.1.14 Density Calibration Factor(s). Calibration factor(s) associated with density measurement.

7 OTHER TYPES OF METERS

7.1 Cross-Correlation Meter

A flowmeter that operates on the principle that two signals, a known distance apart, are modulated by eddies in the fluid flow. These signals are compared by a correlator, the time taken for an eddy to travel between the two receivers is identified, and hence the flow rate is calculated (see Fig. 16). The principle of cross-correlation can be applied to many types of injected or existing signals (e.g., ultrasonic, thermal, and radioactive signals).

7.2 Doppler Meter

A flowmeter that operates on the principle of the Doppler effect. A signal is emitted into a pipe; the signal

Copyright ASME International
Provided by IHS under license with ASME
No reproduction or networking permitted without license from IHS
Not for Resale

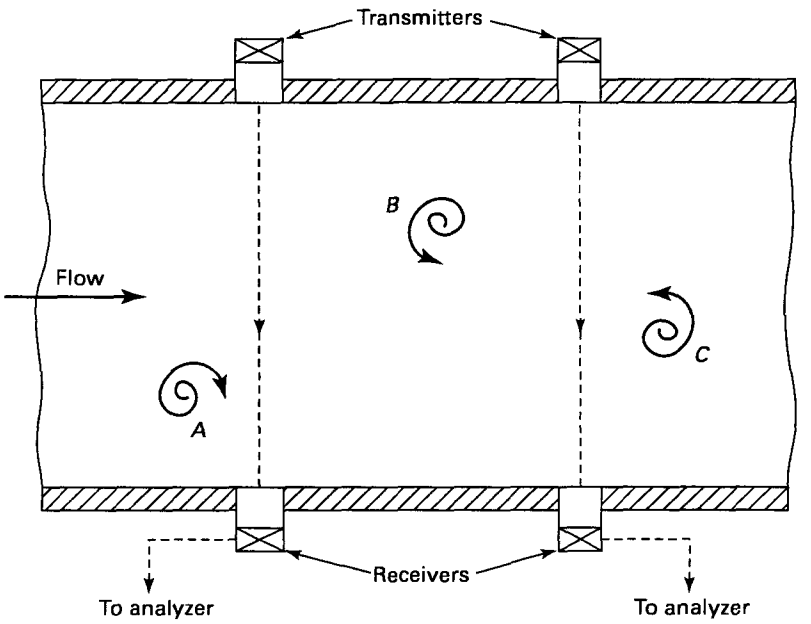

Fig. 16 Principle of Operation of the Cross-Correlation Ultrasonic Meter

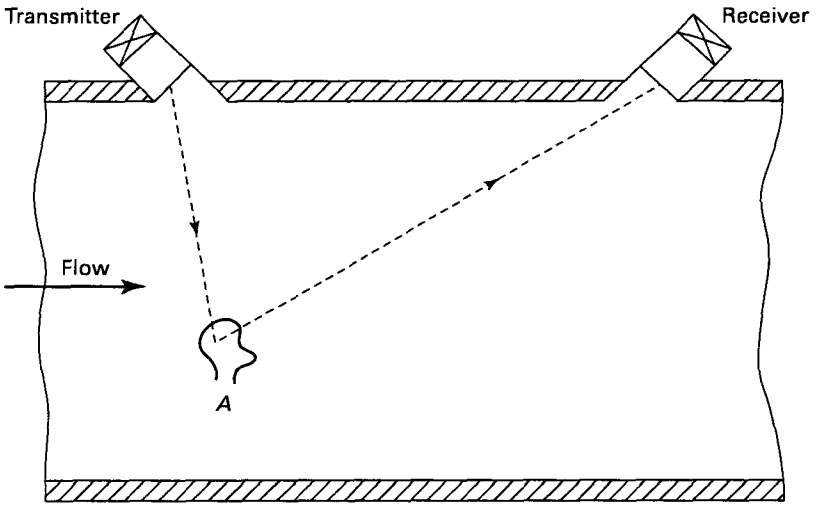

Fig. 17 Principle of Operation of the Doppler Ultrasonic Meter

is then deflected by discontinuities in the fluid and is picked up by a receiver. By comparing the frequency of the deflected signal with that of the original signal, it is possible to calculate the velocity (see Fig. 17).

The Doppler principle can be applied to various types of injected signals (e.g., ultrasonic, optical, and radar).

7.3 Vortex Flowmeter

A flowmeter that produces a vortex sheet downstream of an obstacle to enable the flow rate to be determined.

7.3.1 Fade. Failure of the meter to shed or to detect vortices by a dropout of one or more pulses.

7.3.2 *K* Factor. The *K* factor, in pulses per unit volume, is the ratio of the meter output in number of pulses to the corresponding total volume of fluid passing through the meter during a measured period. Variations in the *K* factor may be presented as a function of either the meter bore Reynolds number or of the flowrate of a specific fluid at a specific set of thermodynamic conditions (see Fig. 18).

In practice, the *K* factor that is commonly used is the mean *K* factor, which is defined by

$$K_{\text{mean}} = \frac{K_{\text{max.}} + K_{\text{min.}}}{2}$$

Copyright ASME International
Provided by IHS under license with ASME
No reproduction or networking permitted without license from IHS
Not for Resale

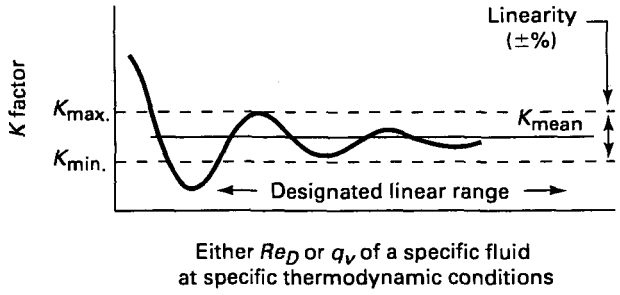

Fig. 18 Example of a *K* Factor Curve

where

$K_{max.}$ = maximum K factor over a designated range
$K_{min.}$ = minimum K factor over the same range

7.3.3 Linearity. Linearity refers to the constancy of the K factor over a specified range, defined by either the pipe Reynolds number or the flow rate. This linear range is usually specified by a band defined by maximum and minimum K factors, within which the K factor is assumed K_{mean}. The upper and lower limits of this range can be specified by the manufacturer as a maximum and minimum Reynolds number range, a flow rate range of a specified fluid, or other meter design limitations such as pressure, temperature, or installation effects.

7.3.4 Lowest Local Pressure. The lowest pressure found in the meter. This is the pressure of concern regarding flashing and cavitation. Some of the pressure is recovered downstream of the meter.

7.3.5 Meter Factor. The reciprocal of mean K factor.

7.3.6 Response Time. For a step change in flowrate, response time is the time needed for the indicated flowrate to differ from the true flowrate by a prescribed amount (e.g., 10%).

7.3.7 Vortex-Shedding Meter. A flowmeter that comprises a bluff body from which a succession of vortices are shed alternately on each side of the bluff body. For a given range of flow rate, the frequency at which the vortices are shed is directly proportional to the flow rate and can be counted using a wide variety of detectors.

7.3.8 Vortex Precession Meter. A flowmeter in which the fluid entering is forced to spin about the centerline by guide vanes. The fluid is contracted, to accelerate the flow, and then expanded and its axis is changed, forming vortex precession. The vortex passes a given point with a frequency that is directly proportional to the flow rate.

Copyright ASME International
Provided by IHS under license with ASME
No reproduction or networking permitted without license from IHS
Not for Resale

NUMERICAL INDEX

GENERAL, 1
Scope, 1.1
Organization, 1.2
References, 1.3

GENERAL TERMS IN FLUID MECHANICS, 2
Base pressure, 2.1
Base temperature, 2.2
Base volume, 2.3
Cavitation, 2.4
Coanda effect, 2.5
Doppler effect, 2.6
Dynamic pressure, 2.7
Flashing, 2.8
Flow conditioner, 2.9
  Flow straightener, 2.9.1
  Profile regulator, 2.9.2
Flow rate, 2.10
  Base flow rate, 2.10.1
  Mass flow rate, 2.10.2
  Volume flow rate, 2.10.3
Gage pressure, 2.11
Hydraulic diameter, 2.12
Isentropic exponent, 2.13
Laminar flow, 2.14
Mach number, 2.15
Nondimensional (relative) velocity, 2.16
Pipe, 2.17
  Irregularity (of a pipe), 2.17.1
  Pipe Roughness, 2.17.2
  Straight length, 2.17.3
Pulsating flow of mean constant flow rate, 2.18
Ratio of the specific heat capacities, 2.19
Reynolds number, 2.20
  Meter bore Reynolds number, 2.20.1
  Throat Reynolds number, 2.20.2
Stagnation pressure, 2.21
Stagnation temperature of a gas, 2.22
Static pressure, 2.23
Static temperature of a gas, 2.24
Steady flow, 2.25
Strouhal number, 2.26
Total pressure, 2.27
Transition flow, 2.28
Turbulent flow, 2.29
Unsteady flow, 2.30
Velocity distribution, 2.31
  Flow profile, 2.31.1
  Fully developed velocity distribution, 2.31.2
  Swirling flow, 2.31.3

UNCERTAINTIES, 3
Accuracy, 3.1
Average value, 3.2
Bias, 3.3
Bias limit, 3.4
Bias of estimator, 3.5
Calibration, 3.6
Calibration, end-to-end, 3.7
Calibration hierarchy, 3.8
Confidence coefficient; confidence level, 3.9
Control chart, 3.10
Correlation coefficient, 3.11
Coverage, 3.12
Degrees of freedom, 3.13
Elemental error, 3.14
Estimate, 3.15
Estimator, 3.16
Frequency distribution, 3.17
Identical, 3.18
Joint distribution function, 3.19
Laboratory standard, 3.20
Mathematical model, 3.21
Measurement error, 3.22
Method of least squares, 3.23
Multiple measurement, 3.24
Normal distribution, 3.25
Observed value, 3.26
One-sided confidence interval, 3.27
Parameter, 3.28
Population, 3.29
Population parameter, 3.30
Precision, 3.31
Precision error, 3.32
Precision index, 3.33
Quality control, 3.34
Random error, 3.35
Random uncertainty, 3.36
Regression, 3.37
Repeatability (qualitative), 3.38
Repeatability (quantitative), 3.39
Reproducibility (quantitative), 3.40
Sample size, 3.41
Sampling error, 3.42
Standard deviation, 3.43
Standard error, 3.44
Standard error of estimate, 3.45
Standard error of the mean, 3.46
Statistic, 3.47
Statistical confidence interval, 3.48
Statistical quality control, 3.49

Copyright ASME International
Provided by IHS under license with ASME
No reproduction or networking permitted without license from IHS
Not for Resale

Statistical quality control charts, 3.50
Student's *t*-distribution, 3.51
Systematic error, 3.52
Systematic uncertainty, 3.53
Taylor series, 3.54
Test, 3.55
Total estimation error, 3.56
Traceability, 3.57
Transducer, 3.58
Transfer standard, 3.59
True value, 3.60
Unbiased estimator, 3.61
Uncertainty (of measurement), 3.62
Uncertainty interval, 3.63
Variance, 3.64
Working standard, 3.65

GENERAL TERMS RELATED TO FLOWMETERS, 4
Drain holes, 4.1
Flowmeter, 4.2
  Flowmeter primary device, 4.2.1
  Flowmeter secondary device, 4.2.2
Flow rate range, 4.3
  Maximum flow rate, 4.3.1
  Minimum flow rate, 4.3.2
Measuring point, 4.4
Pressure loss (caused by a primary device), 4.5
Primary velocity measuring device, 4.6
Proving, 4.7
Rangeability (turndown), 4.8
Reversible meter, 4.9
Velocity profile correction factor, 4.10
Vent holes, 4.11
Working pressure (flowing pressure), 4.12
Working temperature (flowing temperature), 4.13

QUANTITY METER, 5
Diaphragm meter, 5.1
Liquid-sealed drum, 5.2
Nutating disk, 5.3
Reciprocating piston, 5.4
Rotary meter, 5.5
  Rotary positive displacement meter (lobed impeller), 5.5.1
  Rotary positive diplacement meter (piston or vane type), 5.5.2
Weighing and volumetric meters, 5.6
  Weighing method, 5.6.1
    Static weighing, 5.6.1.1
    Dynamic weighing, 5.6.1.2
    Buoyancy correction, 5.6.1.3
    Flow stabilizer, 5.6.1.4
  Volumetric method, 5.6.2
    Piston prover, 5.6.2.1
    Bell prover, 5.6.2.2
    Liquid displacement system, 5.6.2.3
    Diverter, 5.6.3
    Constant level tank, 5.6.4
    Volumetric tank, 5.6.5

RATE METER, 6
Differential pressure device, 6.1
  General terms, 6.1.1
    Acoustic ratio, 6.1.1.1
    Annular chamber, 6.1.1.2
    Diameter ratio (of a primary device used in a given pipe), 6.1.1.3
    Differential pressure, 6.1.1.4
    Differential pressure ratio, 6.1.1.5
    Discharge coefficient, 6.1.1.6
    Expansion (expansibility) factor (for compressible fluid), 6.1.1.7
    Flow coefficient, 6.1.1.8
    Lead line, 6.1.1.9
    Orifice (or throat), 6.1.1.10
    Piezometer ring, 6.1.1.11
    Pressure ratio, 6.1.1.12
    Pressure taps (piezometer taps), 6.1.1.13
      Wall taps, 6.1.1.13.1
      Corner taps, 6.1.1.13.2
      Flange taps, 6.1.1.13.3
      Vena contracta taps, 6.1.1.13.4
      D and *D*/2 pressure taps, 6.1.1.13.5
    Primary device (of a differential pressure device), 6.1.1.14
    Seal pot, 6.1.1.15
    Velocity of approach factor, 6.1.1.16
  Orifice plate, 6.1.2
    Conical entrance orifice plate, 6.1.2.1
    Eccentric orifice plate, 6.1.2.2
    Quarter circle (quadrant edge) orifice plate, 6.1.2.3
    Segmental orifice plate, 6.1.2.4
    Thin orifice plate, 6.1.2.5
  Orifice fitting, 6.1.3
  Nozzle, 6.1.4
    ISA 1932 nozzle, 6.1.4.1
    Long radius nozzle, 6.1.4.2
  Venturi tube, 6.1.5
    Classical venturi tube, 6.1.5.1
    Nozzle venturi tube, 6.1.5.2
    Truncated venturi tube, 6.1.5.3
  Elbow meter, 6.1.6
  Critical venturi nozzle, 6.1.7
  Throat, 6.1.8
Critical flow devices, 6.2
  Choking pressure ratio, 6.2.1
  Critical flow, 6.2.2
  Critical pressure ratio, 6.2.3
  Isentropic perfect gas critical flow function, 6.2.4
  Isentropic real gas critical flow function, 6.2.5
  Real gas critical flow coefficient, 6.2.6

Copyright ASME International
Provided by IHS under license with ASME
No reproduction or networking permitted without license from IHS
Not for Resale

Sonic nozzle, 6.2.7
Sonic venturi nozzle: Smith and Matz type, 6.2.7.1
Sonic venturi nozzle: LMEF type, 6.2.7.2
Velocity area methods, 6.3
Current meter, 6.3.1
Propeller-type current meter, 6.3.1.1
Relative velocity, 6.3.1.2
Self-compensating propeller, 6.3.1.3
Spin test (of a current meter), 6.3.1.4
Discharge velocity, 6.3.2
Peripheral flow (annular flow), 6.3.3
Pitot tube, 6.3.4
Differential pressure (of a Pitot tube), 6.3.4.1
Pitot-static tube, 6.3.4.2
Reversible Cole pitometer, 6.3.4.3
Static pressure tap, 6.3.4.4
Total pressure Pitot tube, 6.3.4.5
Total pressure tap, 6.3.4.6
Stationary rake, 6.3.4.7
Yaw probe, 6.3.4.8
Area meters, 6.3.5
Velocity meters, 6.3.6
Electromagnetic flowmeter, 6.3.6.1
Calibration factor of the primary device, 6.3.6.1.1
Electrode signal, 6.3.6.1.2
Common mode voltage, 6.3.6.1.2.1
Flow signal, 6.3.6.1.2.2
In-phase voltage, 6.3.6.1.2.3
Quadrature voltage, 6.3.6.1.2.4
Reference signal, 6.3.6.1.2.5
Magnetic field, 6.3.6.1.3
Meter electrodes, 6.3.6.1.4
Meter tube, 6.3.6.1.5
Output signal, 6.3.6.1.6
Primary device (of an electromagnetic flowmeter), 6.3.6.1.7
Secondary device (of an electromagnetic flowmeter), 6.3.6.1.8
Tracer methods, 6.3.6.2
Concentration, 6.3.6.2.1
Counting rate (for a radioactive tracer), 6.3.6.2.2
Dilution methods, 6.3.6.2.3
Constant rate injection method, 6.3.6.2.3.1
Integration method, 6.3.6.2.3.2
Dilution rate (or ratio), 6.3.6.2.4
Injection cross section (station), 6.3.6.2.5
Measuring or measurement section, 6.3.6.2.6
Mixing length, 6.3.6.2.7
Sampling cross section (station), 6.3.6.2.8
Transit time method, 6.3.6.2.9
Transit time of the tracer cloud, 6.3.6.2.10
Turbine meter, 6.3.6.3
Flowing pressure, 6.3.6.3.1
Flowing temperature, 6.3.6.3.2
Meter pressure tap, 6.3.6.3.3
Rated conditions, 6.3.6.3.4
Ultrasonic flowmeter, 6.3.6.4
Acoustic matching layer, 6.3.6.4.1
Acoustic path, 6.3.6.4.2
Axial flow velocity, 6.3.6.4.3
Clamp-on-meter, 6.3.6.4.4
Cross flow velocity, 6.3.6.4.5
Gaussian quadrature, 6.3.6.4.6
Nonrefractive system, 6.3.6.4.7
Phase-shift meter, 6.3.6.4.8
Refractive system, 6.3.6.4.9
Sing around, 6.3.6.4.10
Transit time, 6.3.6.4.11
Beam-deflection meter, 6.3.7
Pressure tap connection, 6.4
Containment, 6.4.1
Codes, 6.4.2
Specification break, 6.4.3
Pressure test, 6.4.4
Inspection, 6.4.5
Rod out, 6.4.6
Valve orientation, 6.4.7
Manifold, 6.4.8
Valve arrangement, 6.4.9
Mass methods, 6.5
Coriolis meters, 6.5.1
Zero offset, 6.5.1.1
Zero stability, 6.5.1.2
Cross-talk, 6.5.1.3
Flow sensor (primary device), 6.5.1.4
Oscillating tube(s), 6.5.1.5
Drive system, 6.5.1.6
Measurement sensor, 6.5.1.7
Supporting structure, 6.5.1.8
Housing, 6.5.1.9
Secondary containment, 6.5.1.10
Transmitter (secondary device), 6.5.1.11
Calibration factor(s), 6.5.1.12
Flow calibration factor(s), 6.5.1.13
Density calibration factor(s), 6.5.1.14

OTHER TYPES OF METERS, 7
Cross-correlation meter, 7.1
Doppler meter, 7.2
Vortex flowmeter, 7.3
Fade, 7.3.1
K factor, 7.3.2
Linearity, 7.3.3
Lowest local pressure, 7.3.4
Meter factor, 7.3.5
Response time, 7.3.6
Vortex-shedding meter, 7.3.7
Vortex precession meter, 7.3.8

Copyright ASME International
Provided by IHS under license with ASME
No reproduction or networking permitted without license from IHS
Not for Resale

ALPHABETICAL INDEX

Accuracy, 3.1
Acoustic matching layer, 6.3.6.4.1
Acoustic path, 6.3.6.4.2
Acoustic ratio, 6.1.1.1
Annular chamber, 6.1.1.2
Area meters, 6.3.5
Average value, 3.2
Axial flow velocity, 6.3.6.4.3

Ball prover, 5.6.2.1
Bell prover, 5.6.2.2
Base flow rate, 2.10.1
Base pressure, 2.1
Base temperature, 2.2
Base volume, 2.3
Beam-deflection meter, 6.3.7
Bell prover, 5.6.2.2
Bias, 3.3
Bias limit, 3.4
Bias of estimator, 3.5
Buoyancy correction, 5.6.1.3

Calibration, 3.6
Calibration, end-to-end, 3.7
Calibration factor(s), 6.5.1.12
Calibration factor of the primary device, 6.3.6.1.1
Calibration hierarchy, 3.8
Cavitation, 2.4
Choking pressure ratio, 6.2.1
Clamp-on-meter, 6.3.6.4.4
Classical venturi tube, 6.1.5.1
Coanda effect, 2.5
Codes, 6.4.2
Common mode voltage, 6.3.6.1.2.1
Concentration, 6.3.6.2.1
Concentration coefficient; confidence level, 3.9
Conical entrance orifice plate, 6.1.2.1
Constant level tank, 5.6.4
Constant rate injection method, 6.3.6.2.3.1
Containment, 6.4.1
Control chart, 3.10
Coriolis meter, 6.5.1
Corner taps, 6.1.1.13.2
Correlation coefficient, 3.10
Counting rate (for a radioactive tracer), 6.3.6.2.2
Coverage, 3.12
Critical flow, 6.2.2
Critical flow devices, 6.2
Critical pressure ratio, 6.2.3
Critical venturi nozzle, 6.1.7
Cross-correlation meter, 7.1
Cross flow velocity, 6.3.6.4.5
Cross-talk, 6.5.1.3
Current meter, 6.3.1

D and *D*/2 pressure taps, 6.1.1.13.5
Degrees of freedom, 3.13
Density calibration factor(s), 6.5.1.14
Diameter ratio (of a primary device used in a given pipe), 6.1.1.3
Diaphragm meter, 5.1
Differential pressure, 6.1.1.4
Differential pressure (of a Pitot tube), 6.3.4.1
Differential pressure device, 6.1
Differential pressure ratio, 6.1.1.5
Dilution methods, 6.3.6.2.3
Dilution rate (or ratio), 6.3.6.2.4
Discharge coefficient, 6.1.1.6
Discharge velocity, 6.3.2
Diverter, 5.6.3
Doppler effect, 2.6
Doppler meter, 7.2
Drain holes, 4.1
Drive system, 6.5.1.6
Dynamic pressure, 2.7
Dynamic weighing, 5.6.1.2

Eccentric orifice plate, 6.1.2.2
Elbow meter, 6.1.6
Electrode signal, 6.3.6.1.2
Electromagnetic flowmeter, 6.3.6.1
Elemental error, 3.14
Estimate, 3.15
Estimator, 3.16
Expansion (expansibility) factor (for compressible fluid), 6.1.1.7

Fade, 7.3.1
Flange taps, 6.1.1.13.3
Flashing, 2.8
Flow calibration factor(s), 6.5.1.13
Flow coefficient, 6.1.1.8
Flow conditioner, 2.9
Flow profile, 2.31.1
Flow rate, 2.10
Flow rate range, 4.3
Flow sensor (primary device), 6.5.1.4
Flow signal, 6.3.6.1.2.2

Copyright ASME International
Provided by IHS under license with ASME
No reproduction or networking permitted without license from IHS
Not for Resale

Flow stabilizer, 5.6.1.4
Flow straightener, 2.9.1
Flowing pressure, 6.3.6.3.1
Flowing temperature, 6.3.6.3.2
Flowmeter, 4.2
Flowmeter primary device, 4.2.1
Flowmeter secondary device, 4.2.2
Fluid flowmeter, 5.3
Frequency distribution, 3.17
Fully developed velocity distribution, 2.31.2

Gage pressure, 2.11
Gaussian quadrature, 6.3.6.4.5

Housing, 6.5.1.9
Hydraulic diameter, 2.12

Identical, 3.18
In-phase voltage, 6.3.6.1.2.3
Injection cross section (station), 6.3.6.2.5
Inspection, 6.4.5
Integration method, 6.3.6.2.3.2
Irregularity (of a pipe), 2.17.1
ISA 1932 nozzle, 6.1.14.1
Isentropic exponent, 2.13
Isentropic perfect gas critical flow function, 6.2.4
Isentropic real gas critical flow function, 6.2.5

Joint distribution function, 3.19

K factor, 7.3.2

Laboratory standard, 3.20
Laminar flow, 2.14
Laplace-Gauss distribution, 3.25
Lead line, 6.1.1.9
Linearity, 7.3.3
Liquid displacement system, 5.6.2.3
Liquid-sealed drum, 5.2
Long radius nozzle, 6.1.4.2
Lowest local pressure, 7.3.4

Mach number, 2.15
Magnetic field, 6.3.6.1.3
Manifold, 6.4.8
Mass flow rate, 2.10.2
Mass methods, 6.5
Mathematical model, 3.21
Maximum flow rate, 4.3.1
Measurement error, 3.22
Measurement sensor, 6.5.1.7
Measuring or measurement section, 6.3.6.2.6
Measuring point, 4.4
Meter bore Reynolds number, 2.20.1
Meter electrodes, 6.3.6.1.4
Meter factor, 7.3.5
Meter pressure tap, 6.3.6.3.3
Meter tube, 6.3.6.1.5
Method of least squares, 3.23
Minimum flow rate, 4.3.2
Mixing length, 6.3.6.2.7
Multiple measurement, 3.24

Nondimensional (relative) velocity, 2.16
Nonrefractive system, 6.3.6.4.7
Normal distribution, 3.25
Nozzle, 6.1.4
Nozzle venturi tube, 6.1.5.2
Nutating disk, 5.3

Observed value, 3.26
One-sided confidence interval, 3.27
Orifice (or throat), 6.1.1.10
Orifice fitting, 6.1.3
Orifice plate, 6.1.2
Oscillating tube(s), 6.5.1.5
Output signal, 6.3.6.1.6

Parameter, 3.28
Peripheral flow (annular flow), 6.3.3
Phase-shift meter, 6.3.6.4.8
Piezometer ring, 6.1.1.11
Pipe, 2.17
Pipe roughness, 2.17.2
Piston prover, 5.6.2.1
Pitot-static tube, 6.3.4.2
Pitot tube, 6.3.4
Population, 3.29
Population parameter, 3.30
Precision, 3.31
Precision error, 3.32
Precision index, 3.33
Pressure loss (caused by a primary device), 4.5
Pressure ratio, 6.1.1.12
Pressure tap connection, 6.4
Pressure taps (piezometer taps), 6.1.1.13
Pressure test, 6.4.3
Primary device (of a differential pressure device), 6.1.1.14
Primary device (of an electromagnetic flowmeter), 6.3.6.1.7
Primary velocity measuring device, 4.6
Profile regulator, 2.9.2
Propeller-type current meter, 6.3.1.1
Proving, 4.7
Pulsating flow of mean constant flow rate, 2.18

Quadrant edge orifice plate, 6.1.2.3

Copyright ASME International
Provided by IHS under license with ASME
No reproduction or networking permitted without license from IHS
Not for Resale

Quadrature voltage, 6.3.6.1.2.4
Quality control, 3.34
Quantity meter, 5
Quarter circle (quadrant edge) orifice plate, 6.1.2.3

Random error, 3.35
Random uncertainty, 3.36
Rangeability (turndown), 4.8
Rate meter, 6
Rated conditions, 6.3.6.3.4
Ratio of the specific heat capacities, 2.19
Real gas critical flow coefficient, 6.2.6
Reciprocating piston, 5.4
Reference signal, 6.3.6.1.2.5
Refractive system, 6.3.6.4.9
Regression, 3.37
Relative velocity, 6.3.1.2
Repeatability (qualitative), 3.38
Repeatability (quantitative), 3.39
Reproducibility (quantitative), 3.40
Residual standard deviation, 3.45
Response time, 7.3.6
Reversible Cole pitometer, 6.3.4.3
Reversible meter, 4.9
Reynolds number, 2.20
Ring balance, 5.6.2.4
Rod out, 6.4.6
Rotary meter, 5.5
Rotary positive displacement meter (lobed impeller), 5.5.1
Rotary positive displacement meter (piston or vane type), 5.5.2

Sample size, 3.41
Sample standard deviation, 3.33
Sampling cross section (station), 6.3.6.2.8
Sampling error, 3.42
Seal pot, 6.1.1.15
Secondary containment, 6.5.1.10
Secondary device (of an electromagnetic flowmeter), 6.3.6.1.8
Segmental orifice plate, 6.1.2.4
Self-compensating propeller, 6.3.1.3
Sing around, 6.3.6.4.10
Sonic nozzle, 6.2.7
Sonic venturi nozzle: Smith and Matz type, 6.2.7.1
Sonic venturi nozzle: LMEF type, 6.2.7.2
Specification break, 6.4.3
Spin test (of a current meter), 6.3.1.4
Stagnation pressure, 2.21
Stagnation temperature of a gas, 2.22
Standard deviation, 3.43
Standard error, 3.44
Standard error of estimate, 3.45
Standard error of the mean, 3.46
Static pressure, 2.23
Static pressure tap, 6.3.4.4
Static temperature of a gas, 2.24
Static weighing, 5.6.1.1
Stationary rake, 6.3.4.7
Statistic, 3.47
Statistical confidence interval, 3.48
Statistical quality control, 3.49
Statistical quality control charts, 3.50
Statistically steady flows, 2.23
Steady flow, 2.25
Straight length, 2.17.3
Strouhal number, 2.26
Student's *t*-distribution, 3.51
Subpopulation, 3.29
Supporting structure, 6.5.1.8
Swirling flow, 2.31.3
Systematic error, 3.52
Systematic uncertainty, 3.53

Taylor series, 3.54
Test, 3.55
Thin orifice plate, 6.1.2.5
Throat, 6.1.8
Throat Reynolds number, 2.20.2
Total estimation error, 3.56
Total pressure, 2.27
Total pressure Pitot tube, 6.3.4.5
Total pressure tap, 6.3.4.6
Traceability, 3.57
Tracer methods, 6.3.6.2
Transducer, 3.58
Transfer standard, 3.59
Transit time, 6.3.6.4.11
Transit time method, 6.3.6.2.9
Transit time of the tracer cloud, 6.3.6.2.10
Transition flow, 2.28
Transmitter (secondary device), 6.5.1.11
True value, 3.60
Truncated venturi tube, 6.1.5.3
Turbine meter, 6.3.6.3
Turbulent flow, 2.29

Ultrasonic flowmeter, 6.3.6.4
Unbiased estimator, 3.61
Uncertainty (of measurement), 3.62
Uncertainty interval, 3.63
Unsteady flow, 2.30

Valve arrangement, 6.4.9
Valve orientation, 6.4.7
Variance, 3.64
Velocity area methods, 6.3
Velocity distribution, 2.31
Velocity meters, 6.3.6
Velocity of approach factor, 6.1.1.16

Copyright ASME International
Provided by IHS under license with ASME
No reproduction or networking permitted without license from IHS
Not for Resale

Velocity profile correction factor, 4.10
Vena contracta taps, 6.1.1.12.4
Vent holes, 4.11
Venturi tube, 6.1.5
Volume flow rate, 2.10.3
Volumetric method, 5.6.2
Volumetric tank, 5.6.5
Vortex flowmeter, 7.3
Vortex precession meter, 7.3.8
Vortex-shedding meter, 7.3.7

Wall taps, 6.1.1.12.1
Weighing and volumetric meters, 5.6
Weighing method, 5.6.1
Working pressure (flowing pressure), 4.12
Working standard, 3.65
Working temperature (flowing temperature), 4.13

Yaw probe, 6.3.4.8

Zero offset, 6.5.1.1
Zero stability, 6.5.1.2

Copyright ASME International
Provided by IHS under license with ASME
No reproduction or networking permitted without license from IHS
Not for Resale

Copyright ASME International
Provided by IHS under license with ASME
No reproduction or networking permitted without license from IHS
Not for Resale

ASME Services

ASME is committed to developing and delivering technical information. At ASME's Information Central, we make every effort to answer your questions and expedite your orders. Our representatives are ready to assist you in the following areas:

ASME Press
Codes & Standards
Credit Card Orders
IMechE Publications
Meetings & Conferences
Member Dues Status
Member Services & Benefits
Other ASME Programs
Payment Inquiries
Professional Development
Short Courses
Publications
Public Information
Self-Study Courses
Shipping Information
Subscriptions/Journals/Magazines
Symposia Volumes
Technical Papers

How can you reach us? It's easier than ever!

There are four options for making inquiries* or placing orders. Simply mail, phone, fax, or E-mail us and an Information Central representative will handle your request.

Mail
ASME
22 Law Drive, Box 2900
Fairfield, New Jersey
07007-2900

Call Toll Free
US & Canada: 800-THE-ASME
(800-843-2763)
Mexico: 95-800-THE-ASME
(95-800-843-2763)
Universal: 973-882-1167

Fax—24 hours
973-882-1717
973-882-5155

E-Mail—24 hours
Infocentral@asme.org

* Information Central staff are not permitted to answer inquiries about the technical content of this code or standard. Information as to whether or not technical inquiries are issued to this code or standard is shown on the copyright page. All technical inquiries must be submitted in writing to the staff secretary. Additional procedures for inquiries may be listed within.

Copyright ASME International
Provided by IHS under license with ASME
No reproduction or networking permitted without license from IHS
Not for Resale

--`-`-`,,`,,`,`,,`---

Copyright ASME International
Provided by IHS under license with ASME
No reproduction or networking permitted without license from IHS
Not for Resale

Copyright ASME International
Provided by IHS under license with ASME
No reproduction or networking permitted without license from IHS
Not for Resale

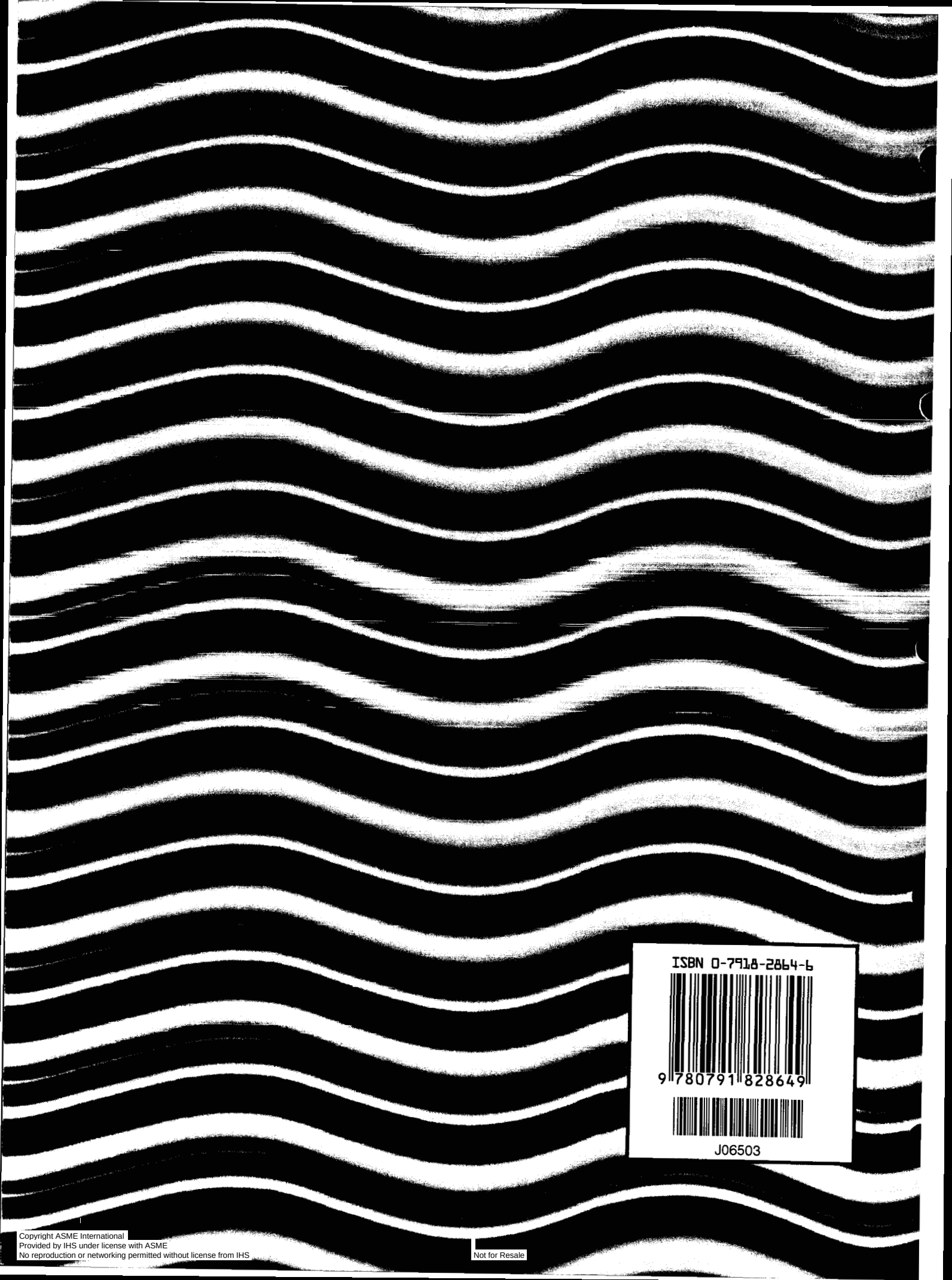
ISBN 0-7918-2864-6
9 780791 828649
J06503
Copyright ASME International
Provided by IHS under license with ASME
No reproduction or networking permitted without license from IHS
Not for Resale