ASME MFC-16M 95 0759670 0571857 T43

ASME MFC-16M-1995

Measurement of Fluid Flow in Closed Conduits by Means of Electromagnetic Flowmeters

AN AMERICAN NATIONAL STANDARD

The American Society of Mechanical Engineers

Copyright ASME International
Provided by IHS under license with ASME
No reproduction or networking permitted without license from IHS

Not for Resale

ASME MFC-16M 95 ■ 0759670 0571858 98T ■

AN AMERICAN NATIONAL STANDARD

Measurement of Fluid Flow in Closed Conduits by Means of Electromagnetic Flowmeters

ASME MFC-16M-1995



The American Society of Mechanical Engineers

345 East 47 th Street, New York, N.Y.

Copyright ASME International
Provided by IHS under license with ASME
No reproduction or networking permitted without license from IHS

Not for Resale

Date of Issuance: September 22, 1995

This Standard will be revised when the Society approves the issuance of a new edition. There will be no addenda or written interpretations of the requirements of this Standard issued to this edition.

ASME is the registered trademark of the American Society of Mechanical Engineers.

This code or standard was developed under procedures accredited as meeting the criteria for American National Standards. The Consensus Committee that approved the code or standard was balanced to assure that individuals from competent and concerned interests have had an opportunity to participate. The proposed code or standard was made available for public review and comment which provides an opportunity for additional public input from industry, academia, regulatory agencies, and the public-at-large.

ASME does not "approve," "rate," or "endorse" any item, construction, proprietary device, or activity.

ASME does not take any position with respect to the validity of any patent rights asserted in connection with any items mentioned in this document, and does not undertake to insure anyone utilizing a standard against liability for infringement of any applicable Letters Patent, nor assume any such liability. Users of a code or standard are expressly advised that the determination of the validity of any such patent rights, and the risk of infringement of such rights, is entirely their own responsibility.

Participation by federal agency representative(s) or person(s) affiliated with industry is not to be interpreted as government or industry endorsement of this code or standard.

ASME accepts responsibility for only those interpretations issued in accordance with governing ASME procedures and policies which preclude the issuance of interpretations by individual volunteers.

No part of this document may be reproduced in any form,
in an electronic retrieval system or otherwise,
without the prior written permission of the publisher.

Copyright © 1995 by
THE AMERICAN SOCIETY OF MECHANICAL ENGINEERS
All Rights Reserved
Printed in U.S.A.

Copyright ASME International
Provided by IHS under license with ASME
No reproduction or networking permitted without license from IHS

Not for Resale

FOREWORD

(This Foreword is not part of ASME MFC-16M-1995.)

This Standard was prepared by Subcommittee 5 of the ASME Committee on the Measurement of Fluid Flow in Closed Conduits. The chairman of the subcommittee is indebted to the many individuals who contributed to this document.

Electromagnetic flowmeters were first introduced to the process industries in the mid-1950's. They quickly became an accepted flowmeter for difficult applications. Subsequent improvements in technology and reductions in cost have transformed this flowmeter into one of the leading contenders for general use in water based and other electrically conducting liquid applications.

Due to differences in design of the various electromagnetic flowmeters in the marketplace, this Standard cannot address detailed performance limitations in specific applications. It does, however, cover issues that are common to all meters, including application considerations.

Suggestions for improvements to this Standard are encouraged. They should be sent to the Secretary, ASME MFC Main Committee, The American Society of Mechanical Engineers, 345 East 47th Street, New York, N.Y. 10017.

This Standard was approved by the American National Standards Institute (ANSI) on April 14, 1995.

Copyright ASME International
Provided by IHS under license with ASME
No reproduction or networking permitted without license from IHS
Not for Resale

ASME STANDARDS COMMITTEE MFC
Measurement of Fluid Flow in Closed Conduits

(The following is the roster of the Committee at the time of approval of this Standard.)

OFFICERS

R. W. Miller, *Chair*
E. H. Jones, Jr., *Vice Chair*
K. I. Baron, *Secretary*

MAIN COMMITTEE PERSONNEL

N. A. Alston
H. P. Bean
S. R. Beitler
C. Blechinger
M. Bradner
J. S. Castorina
G. P. Corpron
D. G. Darby
R. H. Dieck
A. G. Ferron
R. L. Galley
T. L. Hillburn
Z. D. Husain
C. A. Kemper
D. R. Keyser
C. P. Kittredge
W. F. Lee
E. D. Mannherz
G. E. Mattingly
W. F. Seidl
D. W. Spitzer
R. G. Teyssandier
J. H. Vignos

PERSONNEL OF SUBCOMMITTEE 2 — SMALL BORE PRECISION ORIFICE METERS

Z. D. Husain, *Chair*
G. P. Corpron
G. E. Mattingly
R. G. Teyssandier

Copyright ASME International
Provided by IHS under license with ASME
No reproduction or networking permitted without license from IHS
Not for Resale

CONTENTS

Foreword iii
Standards Committee Roster v

1 Scope 1
2 References 1
3 Terminology 1
4 Theory and Measurement Technique 2
5 Flowmeter Description 2
6 Application Considerations 4
7 Equipment Markings 7
8 Liquid Calibration 8

Figures
1 Examples of Electrodes for an Electromagnetic Flowmeter 2
2 Examples of Magnetic Field (B) Variation with Time (t) 3

Appendices
A Added Details Regarding Theory and Measurement Technique 9
B Items of Potential Interest to Users 13
C Liner Material Guidelines 15
D Bibliography 17

Figures
A1 Vector Relationship of the Variables in the Lorentz Force Law 10
A2 Lorentz Force Law Applied to a Conducting Liquid Flowing in a Rectangular Cross-Section Conduit with Insulating Walls 10

Copyright ASME International
Provided by IHS under license with ASME
No reproduction or networking permitted without license from IHS
Not for Resale

MEASUREMENT OF FLUID FLOW IN CLOSED CONDUITS BY MEANS OF ELECTROMAGNETIC FLOWMETERS

1 SCOPE

This Standard applies to AC and pulsed-DC type industrial electromagnetic flowmeters with either wetted or non-wetted electrodes, and to the application of these flowmeters to the measurement of the volumetric flowrate of electrically conducting and electrically homogeneous liquids or slurries flowing in a completely filled closed conduit. It specifically does not apply to insertion or medical type electromagnetic flowmeters. It also does not cover applications of industrial flowmeters involving nonconductive liquids or highly conductive liquids (i.e., liquid metals).

This document contains a discussion of the theory and measurement technique of an electromagnetic flowmeter, a physical description of the various types available, application considerations, specifications as to what equipment markings should reside on the meter, and liquid calibration procedures.

2 REFERENCES

Unless otherwise indicated, the latest issue of the following American National Standards shall be used.

ASME B16 Series, Standards for Valves, Fittings, Flanges, and Gaskets

ASME MFC-1M, Glossary of Terms Used in the Measurement of Fluid Flow in Pipes

ASME MFC-2M, Measurement Uncertainty for Fluid Flow in Closed Conduits

ASME MFC-9M, Measurement of Liquid Flow in Closed Conduits by Weighing Method

ASME MFC-10M, Method for Establishing Installation Effects on Flowmeters

AWWA C207, Steel Pipe Flanges for Waterworks Service (Sizes 4 in. through 144 in.)

See Appendix D for other applicable standards.

3 TERMINOLOGY

Definitions stated in ASME MFC-1M and MFC-2M apply to this Standard. Those definitions particularly pertinent to this document are listed below, in most cases in an expanded form.

accuracy (also referred to as Measurement Uncertainty, see ASME MFC-2M) — the accuracy of a flowmeter, expressed as a percentage, gives the maximum expected plus or minus deviation between the meter's indication and the estimated true value of the flow rate. It is the interval within which the true value of a measured quantity can be expected to lie with a specified confidence level. It is a combination of random and systematic uncertainties. Refer to ASME MFC-2M for the procedures for calculating and combining random and systematic uncertainties.

bias (also referred to as Systematic Uncertainty, see ASME MFC-2M) — the uncertainty associated with systematic errors (i.e., those that cannot be reduced by increasing the number of measurements taken under fixed flow conditions)

linearity — the maximum deviation, expressed as a percentage, of the calibration curve from a straight line passing through zero and coinciding with the calibration curve at the upper range value. Linearity, if stated, applies only above a specified flow rate.

precision (also referred to as Random Uncertainty, see ASME MFC-2M) — the precision of a flowmeter, expressed as a plus or minus percent deviation about the mean measured value, gives the interval within which repeated measured flow values taken under fixed flow conditions should lie with a specified confidence level. It is a measure of the random errors.

primary meter factor (also referred to as Meter Factor) — the number, determined by liquid calibration, that enables the output flow signal to be related to the volumetric flow rate under defined reference conditions.

rangeability (see ASME MFC-1M) — flowmeter rangeability is the ratio of the maximum to minimum flow rates in the range over which the meter meets a specified

Copyright ASME International
Provided by IHS under license with ASME
No reproduction or networking permitted without license from IHS
Not for Resale

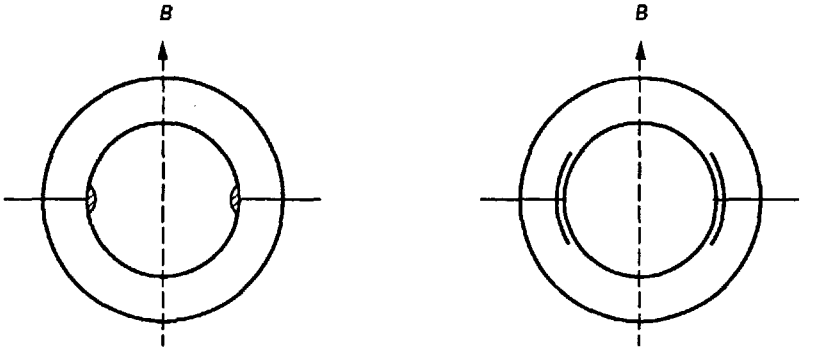

FIG. 1 EXAMPLES OF ELECTRODES FOR AN ELECTROMAGNETIC FLOWMETER

accuracy, as defined above. Rangeability is frequently referred to as turn-down.

repeatability (see ASME MFC-1M) — the closeness of agreement, expressed as a percentage, among a number of consecutive meter's indications of flow rate, taken over a short interval of time, for the same flow and operating conditions. The largest value obtained over the full flow range is the meter's stated repeatability.

4 THEORY AND MEASUREMENT TECHNIQUE

The basic principle on which all electromagnetic flowmeters are based is the Lorentz Force law (see A1 of Appendix A). Consider the electromagnetic flowmeter configurations shown in Fig. 1. A magnetic field (B) has been applied at right angles to the pipe axis in which a conducting fluid is flowing. In addition, two electrodes have been placed on opposite sides of the pipe wall along a line that is at right angles to both the pipe axis and the magnetic field. The Lorentz Force law applied to these configurations leads to an electromotive force (emf_V) (i.e., a flow signal) being generated between the electrodes, which is given by the following:

$$emf_V = C \cdot D \cdot B_o \cdot V$$

where

emf_V = electromotive force (volt)
D = flowtube inner diameter (meter)
B_o = magnetic field at the center of the flowtube (tesla)
V = flow velocity (average liquid velocity over the cross-section) (meter/second)
C = a dimensionless parameter that depends on the specific design of the flowmeter and to a limited extent on the velocity profile. The velocity profile sensitivity of C also depends on the specific design of the flowmeter (see Sections 6.2.2 and 6.4.1.1).

In addition to the above flow-related electromotive force (emf_V), an electrochemical electromotive force emf_C is also produced in the flowtube. The magnitude of emf_C, which changes very slowly in time, can be comparable to emf_V. To reduce the influence of emf_C on the flow measurement to acceptable levels, all electromagnetic flowmeters operate with time varying magnetic fields. The measurement electronics is designed to look specifically at this time varying component of the signal coming from the flowtube (for additional details, see A2 of Appendix A).

Present commercial meters fall into two groups according to the manner in which the magnetic field is varied. It is termed an AC meter if the field is varied sinusoidally (see Fig. 2(a)), a pulsed-DC meter if it is varied in a stepwise fashion (see Figs. 2(b) and (c)).

The fact that time varying flow related signals are being generated means that, in principle, either wetted or non-wetted (i.e., capacitive) sensing electrodes can be used in the flowmeter to detect the flow signal (see Fig. 1).

5 FLOWMETER DESCRIPTION

5.1 Overview

The electromagnetic flowmeter consists of two elements:

Copyright ASME International
Provided by IHS under license with ASME
No reproduction or networking permitted without license from IHS
Not for Resale

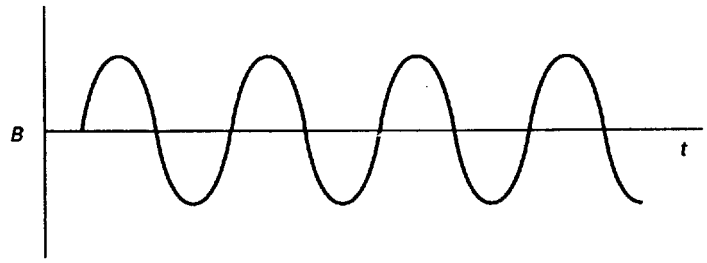

(a) AC Excitation (sinusuidal)

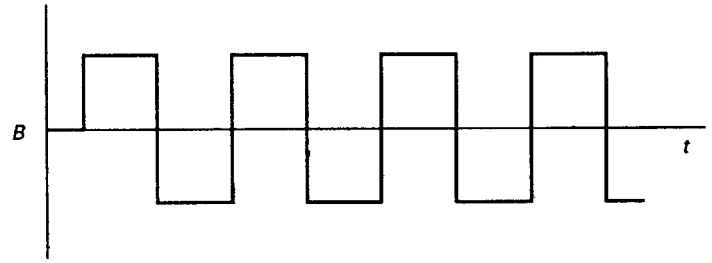

(b) Pulsed-DC Excitation (stepwise fashion)

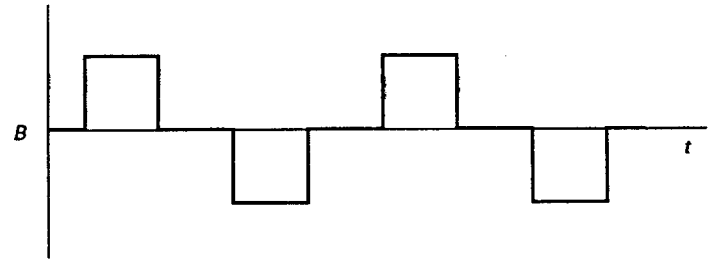

(c) Pulsed-DC Excitation (stepwise fashion)

FIG. 2 EXAMPLES OF MAGNETIC FIELD (*B*) VARIATION WITH TIME (*t*)

(*a*) the primary device (sometimes referred to as the Primary); and

(*b*) the secondary device (sometimes referred to as the Secondary).

5.2 Primary Device

The Primary, which is an integral portion of the piping system, consists of the flow tube with a nonconductive inside surface, and the means for attaching it in the pipeline. It also includes magnetic field coils and two or more sensing electrodes that may be wetted or nonwetted (see Fig. 1). It may also include grounding electrodes, or grounding rings as required by the application or design of the meter.

5.3 Secondary Device

The Secondary consists of the electronic transmitter and its housing which may be mounted either integral with the Primary, or remotely. If the Secondary is mounted remotely from the Primary, it may be necessary to have a separate electrical connection housing, terminals, and pre-amplifier mounted on the Primary, if required by the design of the electronics. The Secondary provides the output from the meter, and in some cases

Copyright ASME International
Provided by IHS under license with ASME
No reproduction or networking permitted without license from IHS Not for Resale

provides power to the coils. The coils may be either AC or pulsed-DC powered, depending on the design of the meter.

5.4 Outputs from the Secondary

The output from the Secondary may be an analog signal (i.e., 4–20 ma DC), a pulse output (frequency), or a digital signal. The pulse output may be scaled or unscaled. Other optional outputs include solid-state or mechanical contact closures. Some designs also offer the option of local visual indication of rate of flow and/or totalized flow.

6 APPLICATION CONSIDERATIONS

6.1 Process Liquid

6.1.1 Liquid Electrical Conductivity

If the electrical conductivity of the liquid is uniform, the meter output is generally independent of the liquid conductivity when the latter is above a specified minimum value. The minimum liquid conductivity should be obtained from the manufacturer.

If, however, the conductivity is not uniform throughout the meter, errors may occur. Non-homogeneous streams, such as blends, should be sufficiently mixed so as to have uniform electrical conductivity in the measurement region. A heterogeneous liquid, such as a slurry, composed of small particles uniformly distributed in a medium can be considered an electrically homogeneous liquid.

6.1.2 Noisy Flow Signal

Excessive signal noise may be encountered when measuring some slurry flows, particularly with pulsed-DC systems. This is a complex phenomenon, because *noise* emanates from different sources at varying frequencies and intensities. The manufacturer should be consulted for recommendations when a noisy output signal is observed.

6.2 Process Hydrodynamics

6.2.1 Reynolds Number Effect

The linearity of industrial electromagnetic flowmeters may be affected at low Reynolds numbers. The effect is generally small and is usually included in the manufacturer's specifications.

6.2.2 Velocity Profile Effect

Distortions in velocity profiles may be caused by pipe fittings (bends, valves, reducers, etc.) placed upstream or downstream from the flowmeter. The resulting flow patterns may influence the performance of the meter (see Section 6.4.1.1).

6.2.3 Slippage

The solids in a slurry may move at a different velocity than the liquid (i.e., slippage may occur). In vertical installations settling solids in a slurry may appear as reverse flow if the normal flow direction is up, and as forward flow if the normal flow is down. Depending on the application, slippage may affect the relationship between the meter output and the quantity of interest. Consult the manufacturer for all slurry applications.

6.3 Primary Device — Sizing Considerations

6.3.1 General Considerations

Magnetic flowmeters have high inherent rangeability. Therefore, it is normally feasible to select a primary of the same nominal size as the connecting pipe. When this is the case, the pressure drop through the Primary can be considered the same as that of an equivalent length of pipe. This sizing ability usually affords a *process friendly* installation, particularly with regard to the measurement of abrasive and fast-settling slurry flows.

It should be noted, however, that for small meters (½ in. and under) the meter bore diameter is normally based on fluid flow rate considerations rather than pipe size.

6.3.2 Special Process Considerations

There may be situations where it is desirable to size the flowmeter at other than the nominal pipe size. When this is the case, the flowing should be considered.

6.3.2.1 Accuracy. Manufacturers generally specify lower absolute accuracy as the velocity through the Primary approaches zero. If this low velocity condition exists, it may be desirable to size the meter at less than the nominal pipe size to increase the velocity (see Section 6.4.2.4).

6.3.2.2 Jet Effect. To avoid a jet effect, piping which is immediately upstream of the Primary should have an internal diameter (ID) equal to or greater than the bore of the Primary.

Copyright ASME International
Provided by IHS under license with ASME
No reproduction or networking permitted without license from IHS

Not for Resale

ASME MFC-16M 95 ■ 0759670 0571867 992 ■

6.3.2.3 Abrasive Slurries. Excessive liner wear may be a consideration for increasing the meter size to lower the liquid velocity. However, excessive liner wear may be caused more by an asymmetrical flow profile (see Section 6.2.2), improper liner material selection (see Section 6.5.2), or horizontal installation of the Primary (see Section 6.4.1.5(a)).

In particular, the leading edge (i.e., upstream edge) of the liner may be subject to wear from abrasive slurries. If this is the case, it may be beneficial to match, if possible, the inside diameter of the Primary with the inside diameter of the pipe to reduce wear of the leading edge. Metal protection rings, which can also act as grounding rings, can also be installed to reduce this effect.

6.3.2.4 Fast-Settling Slurries. Velocities must be high enough to keep slurry solids in suspension when the Primary is mounted horizontally. Settling may occur if the Primary is sized larger than the pipeline. Also, if solids settle during no-flow conditions, there must be sufficient velocity to purge the Primary of sediment at start-up (see Section 6.4.1.5(b)).

6.4 Primary Device — Location, Installation, and Maintenance

6.4.1 Primary Device Location and Orientation

There are no inherent restrictions on horizontal or vertical mounting of the device. However, the performance of magnetic flowmeters may be influenced by the location and orientation of the primary device in the piping system. The following points should be considered.

6.4.1.1 Piping Effects. Ideally, the Primary is designed so that the performance of the flowmeter is the same regardless of flow profile. In practice, when a flow velocity profile is significantly different from that in the original calibration, an electromagnetic flowmeter may exhibit a change in performance. The arrangement and location of pipe fittings, valves, pumps, etc., up and downstream (especially upstream) of the primary device, are the main factors that influence the velocity profile. Complete data on the effects of flow disturbances may not always be available. Nevertheless, manufacturers usually recommend specific upstream and downstream lengths of straight pipe of the same nominal diameter as the Primary for proper performance.

Swirling flow, such as that produced by two out-of-plane elbows located upstream of the Primary, may introduce measurement errors. When swirling flow is suspected or known, it is advisable, if practical, to use a swirl reducing flow conditioner. Otherwise, it may be necessary to relocate the Primary where swirl is not a factor.

6.4.1.2 Full Pipe Requirements. The primary device should be mounted in such a position that it is completely filled with the liquid being metered. Otherwise, this Standard does not apply, and the measurement may not be within the manufacturer's stated accuracy. It may, for example, be difficult to assure a full pipe in a vertical-down flow situation.

6.4.1.3 Electrode Position — Horizontal Installations. Since gas bubbles in a horizontal pipe tend to rise and may collect at the top of the pipe, the primary device should be mounted so that no sensing or grounding electrodes are located at or near the top of the pipe.

6.4.1.4 In-Situ Zero Checking. If it is desired to check the flowmeter zero in-situ, a method must be provided to stop the flow through the primary device, leaving it filled with stationary liquid.

6.4.1.5 Entrained Solids (Slurries). There are two major location and installation considerations for the measurement of liquids containing entrained solids (i.e., slurries). The manufacturer should be consulted for all slurry applications.

(*a*) *Abrasive Slurries.* Abrasive slurries can cause uneven or excessive liner wear. On the premise that a proper choice of liner is made (see Section 6.5.2), an important factor in reducing liner wear is to have sufficient straight length of upstream piping to ensure that a symmetrical velocity profile exists within the Primary (see Section 6.4.1.1). This tends to minimize localized erosion of the liner.

In addition, since slurry solids tend to move along the bottom of a horizontal pipe, excessive liner wear may occur in the bottom of a horizontally mounted Primary, particularly with highly abrasive slurries. Vertical mounting of the primary device can prevent this situation (see Section 6.2.3).

(*b*) *Solids Settling-Out.* Under flowing conditions, pipeline velocities should be high enough to avoid settling of solids (see Section 6.3.2.3). Smooth transitions between the pipe and the Primary can reduce settling. When the flow stops, however, solids may settle out in the Primary. Vertical mounting of the flowmeter can avoid this problem (see Section 6.2.3).

6.4.1.6 Location with Regard to Electrical Interference. Under most field situations, electrical interference is not a problem. However, if feasible, the Primary should be installed in an area where minimal

Copyright ASME International
Provided by IHS under license with ASME
No reproduction or networking permitted without license from IHS Not for Resale

electrical interference, which may result from equipment operating at high voltage and/or high current, is expected.

When this is not possible with remotely mounted Secondaries, the Primary and Secondary should be located so that the signal cable is run in conduit, which can be separated from wiring that is at high voltage and/or carries high current.

Some installations such as electrolytic processes, where high currents may be flowing through the piping and the liquid (and, consequently, through the Primary) have inherently high electrical interferences. The manufacturer should be contacted for specific grounding and possibly isolation procedure(s) in these situations.

6.4.2 Installation of Primary Device

6.4.2.1 Installation Design. When designing the piping system, access for installing and removing the primary device, as well as access to the electrical connections, should be provided. Care should be taken during pipework construction to minimize the strain on the primary device either during or after installation.

6.4.2.2 Handling of the Primary Device. Care should be taken when handling the primary device. Slings around the primary device, or lifting lugs, should be used on large primary devices. Lifting by any means that could damage the liner should be avoided.

6.4.2.3 Pipework Alignment and Connectors. Allowance should be made for the length of the Primary, the gaskets, and the alignment of the Primary with the connecting pipe.

6.4.2.4 Transition Piping. When the connecting pipe is of a different size than the Primary, it is advisable to use concentric reducers upstream and downstream of the Primary to affect a gradual transition from one diameter to another. In most applications, this should reduce pressure loss and flow disturbance effects. Unless these reducers have a relatively shallow taper (typical manufacturers' recommendations vary from 8 to 15 degrees maximum included angle), they should be installed at locations that permit the manufacturers' normal upstream and downstream straight pipe run recommendations to be followed. Consult the manufacturer for other types of transition piping.

6.4.3 Electrical Installation

6.4.3.1 General Requirements. The metered liquid, the primary device body, and the secondary should be at the same potential, preferably earth potential. The manufacturer's instructions should be carefully followed for interconnections between the primary and secondary device.

The electrical connection between the liquid and the primary device body may be made by contact with the connecting pipework, or by conductive grounding (earthing) rings or electrodes. When lined or nonconductive pipework is used, the manufacturer's recommendations should be adhered to, since proper grounding (earthing) is very important.

6.4.3.2 Power Factor (AC Systems Only). Because the Primary has coils to provide the magnetic field, it may have a low power factor. To improve the power factor, capacitors may be connected in parallel with the supply by arrangement with the manufacturer.

6.4.3.3 Cathodic Protection. When an electromagnetic flowmeter primary device is installed in a cathodic protected pipeline, precautions may be necessary to ensure that the DC component of the cathodic current does not affect the accuracy and stability of the flowmeter system. In such a case, relevant electric codes and manufacturer's recommendations should be consulted.

6.4.4 Coatings and Deposits

If insulating or conducting materials are deposited from the process liquid onto the electrodes or the walls of the meter tube, the performance of the meter may be affected. In such situations, provision should be made for cleaning the electrodes, by either electrical, chemical, ultrasonic, or mechanical methods. This can be accomplished with the flowmeter connected to the pipework, or removed from it. Manufacturers should be consulted for the various options available.

6.5 Primary Device — Materials of Construction

6.5.1 General Guidelines

Materials used for construction of process wetted parts must be compatible with the process.

Safety and environmental programs of end users may require complete traceability of all process wetted and containment materials used in the manufacture of the primary.

6.5.2 Liner Materials

When selecting a liner, the process liquid and any cleaning agents that will be flowing through the pipeline

Copyright ASME International
Provided by IHS under license with ASME
No reproduction or networking permitted without license from IHS
Not for Resale

ASME MFC-16M 95 ■ 0759670 0571869 765 ■

must be considered. Some examples and general application guidelines for liner materials are summarized in Appendix C. These materials have generally good wear resistance. The manufacturer should be contacted for the specifications and recommendations regarding their liner materials.

6.5.3 Electrode Materials

When selecting an electrode, the process liquid and any cleaning agents that will be flowing through the pipeline must be considered. Examples of electrode materials include Stainless Steel, Hastelloy C, Platinum, Platinum/Iridium, Tantalum, Titanium, and Zirconium. Manufacturers should be contacted for specifications and recommendations regarding their electrode materials.

6.6 Secondary Device — Installation

6.6.1 Location of Secondary Device

Secondary devices should be installed in an accessible position with due regard being given to the manufacturer's specifications.

6.6.2 Electrical Installation

The cables carrying the electrode signals and coil drive and/or reference signals should be of a type approved by the manufacturer.

Care should be taken to ensure that signal cables are not routed in the same conduits or wireways as high voltage and/or high current carrying cables. Signal cables and coil drive and/or reference cables can generally be run in the same conduit or wireway, but the manufacturers' instructions should be followed for the specific type of flowmeter system being installed.

If the equipment must be mounted in an area of potentially high electrical interference, the signal, coil, and/or reference wiring between the Primary and a remotely mounted Secondary should be run in a conduit which is physically separated from high voltage and/or high current wiring and equipment.

6.7 Safety

6.7.1 Electrical Safety

The primary and secondary portions of the metering system must be designed, manufactured, and certified to meet or exceed the electrical classification for the area in which installed.

Cabling supplied by manufacturers to connect primaries and secondaries must meet or exceed area electrical classifications and user safety codes. The cable used to connect the meter power source and to connect the meter output signal to the user's system should also meet area electrical classifications.

6.7.2 Mechanical Safety

The Primary, which is an integral portion of the piping system, must be designed, manufactured, and certified to meet or exceed industry standards for piping codes (i.e., ASME B16 Series, etc.) and classifications. If this is not feasible in a given application, the user and manufacturer must agree on what ratings are to apply. User requirements for specific location piping codes, material traceability, primary cleanability, x-rays, etc., need to be negotiated on an individual basis between manufacturer and user.

When using reducers and expanders in the piping system, the system and drains should be designed so that trapping of process fluids is avoided and complete system cleaning needs are addressed.

7 EQUIPMENT MARKINGS

7.1 Introduction

The Primary and Secondary should be marked either directly or on a name plate attached thereto as indicated below.

7.2 Primary Device

7.2.1 Mandatory Information

(*a*) Instrument type and serial number
(*b*) Liner Material
(*c*) Electrode Material
(*d*) Maximum rated process temperature
(*e*) Maximum rated process pressure (at maximum rated process temperature)
(*f*) Voltage, frequency, and power requirements, if independently powered
(*g*) Enclosure protection rating
(*h*) Flow direction indication

7.2.2 Optional Information

(*a*) Nominal diameter
(*b*) Meter factor

Copyright ASME International
Provided by IHS under license with ASME
No reproduction or networking permitted without license from IHS
Not for Resale

7.3 Secondary Device

7.3.1 Mandatory Information

(*a*) Instrument type and serial number
(*b*) Voltage, frequency, and power requirements
(*c*) Output signals
(*d*) Enclosure protection rating

8 LIQUID CALIBRATION

8.1 Overview

The greatest accuracy can be obtained if the flowmeter system (Primary and Secondary) is calibrated in-situ using standards traceable to NIST. If this is not feasible, the user must rely on a laboratory liquid calibration of the magnetic flowmeter. This calibration may be in the user's own in-house facility, that of the manufacturer, or an independent or government testing laboratory.

8.2 Calibration Conditions

The Primary should be calibrated under specified reference conditions. The ambient temperature range, liquid temperature range, liquid conductivity range, supply voltage, and the pipeline diameter should be given as the reference conditions.

The user may want to request a system calibration in which the Primary and Secondary are calibrated as a unit. This may result in improved accuracy.

8.3 Calibration Facilities

The flowmeter calibration facilities should be either gravimetric or volumetric based, and shall be traceable to NIST or some other recognized national or international standard. Measurement and test equipment used during the calibration shall also have traceability.

The standard (either primary, secondary, or transfer) used in the calibration of the magnetic flowmeter should have an uncertainty of one quarter or less of the stated uncertainty of the device being calibrated. Any deviation from this rule shall be documented.

Calibrations shall be in accordance with the applicable standards (see Section 2 and Appendix D). Calculations and documentation of uncertainties shall be in accordance with ASME MFC-2M.

8.4 Calibration of the Primary

The Primary shall be calibrated in accordance with Section 8.3, either by itself or together with the user's Secondary. A calibration procedure incorporating specific supplier instructions should be developed and followed.

The calibration data is used to calculate the Meter Factor of the Primary. A copy of this data shall be available to the user.

8.5 Calibration of the Secondary

The Secondary, if calibrated separately, shall be calibrated against a reference standard.

A copy of the calibration data for each Secondary shall be available to the user.

8.6 Spanning of the Secondary

The Meter Factor is used to span the Secondary.

8.7 Installation Effects

Magnetic flowmeters can be affected by upstream and downstream piping or disturbing elements. The effects of particular disturbing elements on meter performance can be determined by following the procedures given in ASME MFC-10M.

Copyright ASME International
Provided by IHS under license with ASME
No reproduction or networking permitted without license from IHS
Not for Resale

APPENDIX A
ADDED DETAILS REGARDING THEORY AND MEASUREMENT TECHNIQUE

(This Appendix is not part of ASME MFC-16M-1995 and is included for information only.)

A1 THEORY

The underlying principle on which all electromagnetic flowmeters are based is the Lorentz Force law, which states that a particle with charge q moving with velocity u at right angles to a magnetic field (B) experiences a force given by the following:

$$F_u = q \cdot B \cdot u \tag{1}$$

where
F_u = force on particle (newton)
q = charge on particle (coulomb)
u = velocity of particle (meter/second)
B = magnetic field (tesla)

The direction of this force is at right angles to both the direction of motion and the direction of the magnetic field as shown in Fig. A1.

Since an electrically conducting liquid has within it a collection of mobile charged particles (i.e., ions or electrons) the Lorentz Force law can be applied to them.

Consider a rectangular uniform cross-section conduit, as shown in Fig. A2, made of electrically insulating material. Assume that a uniform magnetic field (B) is applied at right angles to the top and bottom of the conduit, and that the velocity profile of the conducting liquid flowing full in the conduit is flat (i.e., a constant axial velocity (v)) over the entire cross-section.

In this situation the Lorentz force acting on any given charged particle in the flowing liquid is the same and is given by Eq. (1), as shown by the following:

$$F_v = q \cdot B \cdot v \tag{2}$$

where
F_v = force on particle moving with liquid [newton],
v = axial liquid velocity [meter/second].

This force is at right angles to the sides of the conduit. The work (W) done by the Lorentz force, if it were to move one of these charges from one side of the conduit to the other, is the force (F_V) times the distance (s), as shown by the following:

$$W_V = F_V s = q \cdot s \cdot B \cdot v \tag{3}$$

where
W_V = work done by Lorentz force (joule)
s = width of conduit (meter)

Hence, the electromotive force (*emf*) (i.e., the work per unit charge) that this device is capable of generating is as follows:

$$emf_V = s \cdot B \cdot v \tag{4}$$

where
emf_V = electromotive force (volt)

Hence, for a fixed s and a known B, a measurement of the *emf* generated by the Lorentz force (emf_V) yields a measurement of the fluid velocity.

In typical industrial flowmeters the conduit is circular in cross-section, the magnetic field is not uniform, and the liquid velocity profile is non-uniform and a function of flow rate. Nevertheless, it can be shown theoretically (see Shercliff, J.A., Appendix D) and demonstrated experimentally that in this general situation the *emf* generated by the Lorentz force is given by the following:

$$emf_V = C \cdot D \cdot B_o \cdot V \tag{5}$$

where
emf_V = electromotive force (volt)
D = flowtube inner diameter (meter)

Copyright ASME International
Provided by IHS under license with ASME
No reproduction or networking permitted without license from IHS
Not for Resale

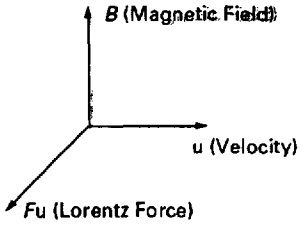

FIG. A1 VECTOR RELATIONSHIP OF THE VARIABLES IN THE LORENTZ FORCE LAW

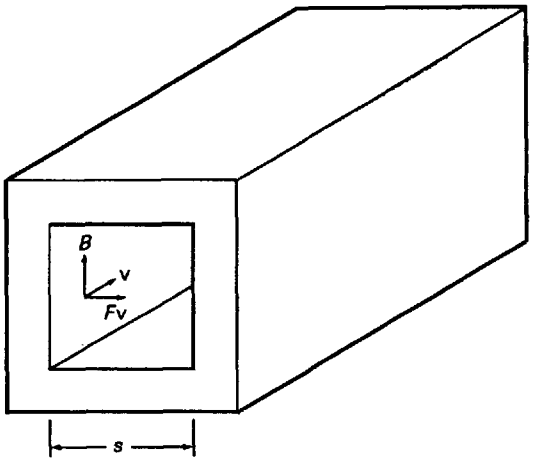

FIG. A2 LORENTZ FORCE LAW APPLIED TO A CONDUCTING LIQUID FLOWING IN A RECTANGULAR CROSS-SECTION CONDUIT WITH INSULATING WALLS

B_o = magnetic field at the center of the flowtube (tesla)

V = flow velocity (average axial liquid velocity over the cross-section) (meter/second)

C = a dimensionless parameter that depends on the specific design of the flowtube and to a limited extent on the velocity profile

A2 MEASUREMENT TECHNIQUE

In addition to the *emf* generated by the Lorentz force (emf_V) (i.e., the flow signal), an electrochemical *emf* (emf_C) is produced in the primary device. This *emf* is generated at the interface between the process liquid and the surface of electrodes used to detect emf_V, in the case of wetted electrodes, or between the process fluid and the insulating walls of the primary, in the case of non-wetted electrodes. This *emf*, similar to that generated in a battery, appears on the sensing electrodes together with emf_V. Since its magnitude can be comparable to emf_V, a measurement technique that distinguishes emf_V from emf_C must be utilized.

The solution to this problem, which takes advantage of the fact that the electrochemical *emf* changes very slowly with time, is to vary the magnetic field in a fixed periodic manner (i.e., at a fixed frequency). The electronics in the secondary device are designed to measure specifically this time varying component of the *emf* generated in the primary. To obtain a good flow measurement, the period of this variation must be shorter than the time it takes for emf_C to drift to a detectable amount.

Copyright ASME International
Provided by IHS under license with ASME
No reproduction or networking permitted without license from IHS
Not for Resale

Varying the magnetic field to eliminate the effect of emf_C introduces yet another source of *emf*, the induced *emf* (emf_I), a phenomenon commonly referred to as the transformer effect. This *emf* is equal in magnitude to the rate of change of the magnetic flux through the area defined by the electrical connections leading from the secondary to the electrodes in the primary device.

The influence of varying the magnetic field on the flow measurement can be reduced to acceptable levels by appropriate measurement technqiues. In the case of AC meters emf_I is 90 degrees out-of-phase (i.e., in quadrature) with emf_V and hence its influence can be reduced by phase sensitive detection techniques, using the phase of the magnetic field, or a related electrical quantity, as the reference. In the case of pulsed-DC meters, the measurement of emf_V is made during the time when the magnetic field is, ideally, not changing, and hence emf_I approaches zero.

Copyright ASME International
Provided by IHS under license with ASME
No reproduction or networking permitted without license from IHS
Not for Resale

APPENDIX B
ITEMS OF POTENTIAL INTEREST TO USERS

(This Appendix is not part of ASME MFC-16M-1995 and is included for information only.)

The manufacturer should be prepared to respond to the user's hardware, performance, and application questions on items such as those given, as follows.

NOTE: Many of the items listed will be covered in specification sheets and operating manuals.

B1 PRIMARY

(*a*) Variables:
(*1*) sizes available
(*2*) materials available for lining
(*3*) materials of construction of all wetted parts, except linings
(*4*) materials of construction of all non-wetted parts
(*5*) cleaning supplies and procedures used on all wetted parts
(*b*) Operating Limits:
(*1*) maximum and minimum flow rate within the uncertainty statement
(*2*) temperature/pressure ratings available
(*3*) fluid temperature limits
(*4*) fluid minimum and maximum pressure limits and how certified
(*5*) ambient temperature limits
(*6*) humidity limits
(*7*) hazardous area and intrinsic safety code classification
(*8*) enclosure rating
(*9*) corrosive atmosphere limits
(*10*) corrosive fluid limitations
(*c*) Calibration:
(*1*) method of determining meter factor
(*2*) system calibration vs. master electronics
(*3*) if master electronics used (see (c)(2)), potential effect on accuracy
(*d*) Effects on Performance of:
(*1*) conductivity
(*2*) fluid temperature
(*3*) fluid pressure
(*4*) density variation
(*5*) viscosity variation
(*6*) effects of upstream and downstream piping configurations
(*7*) flow pulsation
(*8*) flow overrange
(*9*) ambient temperature change
(*10*) power supply voltage and frequency variations
(*11*) electromagnetic interference (EMI)
(*12*) vibration
(*13*) two-phase flow
(*14*) erosion by slurries, impurities, etc.
(*15*) product build-up, wall coatings
(*16*) stress due to installation
(*17*) end connection effects
(*e*) Installation Requirements:
(*1*) upstream and downstream piping requirements to maintain performance specifications
(*2*) upstream and downstream piping requirements to maintain ultimate performance
(*3*) effect on uncertainty if it is not possible to provide the recommended straight pipe per (e)(1) above?
(*4*) power supply
(*5*) process connections — mating flanges, threaded ends, welding neck, sanitary, etc.
(*6*) liner entrance protectors
(*7*) mounting requirements — weight, dimensions, bracket(s):
(*a*) clearance for maintenance
(*b*) stress limitations due to piping
(*c*) orientation requirements
(*8*) mounting, vibration, and shock limitations
(*9*) recommended cleaning procedures
(*10*) provisions for heat tracing

Copyright ASME International
Provided by IHS under license with ASME
No reproduction or networking permitted without license from IHS
Not for Resale

(*11*) provisions for thermal insulation

(*12*) necessity of cleaning electrodes; if so, recommended procedure

(*13*) effect if pipe is less than full

(*14*) effect if the meter is powered up and there is no liquid in the meter

(*15*) sensitivity of meter to noise when measuring slurry flows

(*16*) recommendations for minimizing the effects of pipeline noise

(*17*) recommended wire cable

(*18*) special tools, test instruments, or alignment gauges required for installing meter

(*19*) effect of alignment on meter performance

(*20*) requirements for special bolts

(*21*) torque recommendations for flanged meters and wafer meters

(*f*) Hydaulic Considerations:

(*1*) pressure loss vs. flow rate for the expected application

(*2*) sizes vs. flow ranges

B2 SECONDARY

(*a*) Available outputs — to what standards?

(*b*) Supply voltage and frequency limits

(*c*) Ambient temperature limits

(*d*) Humidity limits

(*e*) Electrical code classification and approvals

(*f*) Enclosure rating

(*g*) Cabling requirements and limitations

(*h*) Distance limitation for remote-mounted Secondary; considerations regarding process liquid conductivity

(*i*) External devices required to change span of meter

(*j*) Displays

(*k*) Alarms

(*l*) Totalizers

(*m*) Additional outputs

B3 SYSTEM

(*a*) Overall accuracy (uncertainty) for a specific application

Copyright ASME International
Provided by IHS under license with ASME
No reproduction or networking permitted without license from IHS
Not for Resale

APPENDIX C
LINER MATERIAL GUIDELINES

(This Appendix is not part of ASME MFC-16M-1995 and is included for information only.)

Manufacturers should be consulted for specific specifications!

General Classification	Liner Material	Typical Temperature Range	Chemical Resistance	Additional Comments
Elastomers	Hard Rubber	0 to 90°C	Good, LA, AC, AL	[Note (1)]
	Natural Rubber	−20 to +70°C	Good	[Note (1)]
	Neoprene	0 to 100°C	Good, OL, GR	[Note (1)]
	Polyurethane	−50 to +50°C	...	[Note (2)]
	Others	See mfg.	See mfg.	
Fluorinated Hydrocarbons	PTFE	−50 to +180°C	Good	[Note (3)]
	PFA	−50 to +180°C	Good	[Note (3)]
	Tefzel (R)	−40 to +120°C	Good	
Fluorinated Plastics	Polyamide	0 to +65°C		
	Chlorinated Polyether	0 to +120°C	Good, CS AC to 30%	
	Glass Reinforced Plastic	−20 to +55°C		
Ceramics	Aluminum Oxide	−65 to +180°C	Good, AC, AL	[Notes (4), (5)]
	Others	See mfg.	See mfg.	[Notes (4), (5)]
Others	Vitreous Enamel	0 to 150°C	Good	

NOTES:
(1) Rubber based materials are attacked by high concentrations of free halogens, aromatic and halogenated hydrocarbons, and high concentrations of oxidizing chemicals.
(2) Good impact resistance.
(3) May collapse under sub-atmospheric conditions.
(4) Full vacuum resistance, good abrasion resistance.
(5) Thermal shock may cause cracking.

Abbreviations:
AC — Acids
AL — Alkalis
CS — Caustic Soda
GR — Grease
LA — Leaching Agent
OL — Oil

Copyright ASME International
Provided by IHS under license with ASME
No reproduction or networking permitted without license from IHS
Not for Resale

APPENDIX D
BIBLIOGRAPHY

(This Appendix is not part of ASME MFC-16M-1995 and is included for information only.)

(*1*) ISO 4006, *Measurement of Fluid Flow in Closed Conduits — Vocabulary and Symbols*

(*2*) ISO 4185, *Measurement of Liquid Flow in Closed Conduits — Weighing Method*

(*3*) ISO 5168, *Measurement of Fluid Flow — Estimation of Uncertainty of a Flow Rate Measurement*

(*4*) ISO/TR 6817, *Measurement of Conductive Liquid Flow Rate in Closed Conduits — Method Using Electromagnetic Flowmeters*

(*5*) ISO 7066-1, *Assessment of Uncertainty in the Calibration and Use of Flow Measurement Devices — Part 1: Linear Calibration Relationships*

(*6*) ISO 7066-2, *Assessment of Uncertainty in the Calibration and Use of Flow Measurement Devices — Part 2: Non-Linear Calibration Relationships*

(*7*) ISO/DIS 9104, *Measurement of Fluid Flow in Closed Conduits — Methods of Evaluating the Performance of Electromagnetic Flowmeters for Liquids*

(*8*) ISO 9368-1, *Measurement of Liquid Flow in Closed Conduits by the Weighing Method — Procedures for Checking Installations — Part 1: Static Weighing Systems*

(*9*) MIL-STD-45662A, *Calibration System Requirements*

(*10*) *Fluid Meters, Their Theory and Application,* Sixth Edition, The American Society of Mechanical Engineers, 1971

(*11*) Miller, R. W., Chapters 6 and 14, *Flow Measurement Engineering Handbook,* Second Edition, McGraw Hill Publishing Co., 1989

(*12*) Pao, R.H.F., *Fluid Mechanics,* John Wiley and Sons, Inc., 1961

(*13*) Shercliff, J.A., *The Theory of Electromagnetic Flow-Measurement,* Cambridge University Press, 1962

Copyright ASME International
Provided by IHS under license with ASME
No reproduction or networking permitted without license from IHS
Not for Resale

STANDARDS FOR MEASUREMENT OF FLUID IN CLOSED CONDUITS

Glossary of Terms Used in the Measurement of Fluid Flow in Pipes MFC-1M–1991
Measurement Uncertainty for Fluid Flow in Closed Conduits ..... MFC-2M–1983(R1988)
Measurement of Fluid Flow in Pipes Using Orifice, Nozzle, and Venturi MFC-3M–1989
Measurement of Gas Flow by Turbine Meters ..... MFC-4M–1986(R1990)
Measurement of Liquid Flow in Closed Conduits Using Transit-Time Ultrasonic Flowmeters ..... MFC-5M–1985(R1994)
Measurement of Fluid Flow in Pipes Using Vortex Flow Meters MFC-6M–1987
Measurement of Gas Flow by Means of Critical Flow Venturi Nozzles ..... MFC-7M–1987(R1992)
Fluid Flow in Closed Conduits – Connections for Pressure Signal Transmissions Between Primary and Secondary Devices MFC-8M–1988
Measurement of Liquid Flow in Closed Conduits by Weighing Method MFC-9M–1988
Method for Establishing Installation Effects on Flowmeters MFC-10M–1994
Measurement of Fluid Flow by Means of Coriolis Mass Flowmeters ..... MFC-11M–1989(R1994)
Measurement of Fluid Flow Using Small Bore Precision Orifice Meters MFC-14M–1995
Measurement of Fluid Flow in Closed Conduits by Means of Electromagnetic Flowmeters MFC-16M-1995

The ASME Publications Catalog shows a complete list of all the Standards published by the Society. For a complimentary catalog, or the latest information about our publications, call 1-800-THE-ASME (1-800-843-2763).

Copyright ASME International
Provided by IHS under license with ASME
No reproduction or networking permitted without license from IHS
Not for Resale

ASME Services

ASME is committed to developing and delivering technical information. Representatives at ASME's Information Central are available to assist you in the following areas:

ASME Press
Codes & Standards
Credit Card Orders
IMechE Publications
Meetings & Conferences
Member Dues Status
Member Services & Benefits
Other ASME Programs
Payment Inquiries
Professional Development
Short Courses
Publications
Public Information
Self-Study Courses
Shipping Information
Subscriptions/Journals/Magazines
Symposia Volumes
Technical Papers

There are four options for making inquiries* or placing orders. Simply mail, phone, fax, or E-mail us and an Information Central representative will handle your request.

Mail
ASME
22 Law Drive, Box 2900
Fairfield, New Jersey
07007-2900

Call Toll Free
US & Canada: 800-THE-ASME
(800-843-2763)
Mexico: 95-800-THE-ASME
(95-800-843-2763)
Universal: 201-882-1167

Fax-24 hours
201-882-1717
201-882-5155

E-Mail-24 hours
Infocentral
@ asme.org

* Information Central staff are not permitted to answer inquiries about the technical content of this code or standard. Information as to whether or not technical inquiries are issued to this code or standard is shown on the copyright page. All technical inquiries must be submitted in writing to the staff secretary. Additional procedures for inquiries may be listed within.

Copyright ASME International
Provided by IHS under license with ASME
No reproduction or networking permitted without license from IHS
Not for Resale

ISBN #0-7918-2317-2

K13895

Copyright ASME International
Provided by IHS under license with ASME
No reproduction or networking permitted without license from IHS

Not for Resale