ASME MFC-14M-2003
(Revision of ASME MFC-14M-2001)

MEASUREMENT OF FLUID FLOW USING SMALL BORE PRECISION ORIFICE METERS

AN AMERICAN NATIONAL STANDARD



The American Society of Mechanical Engineers

Copyright ASME International
Provided by IHS under license with ASME
No reproduction or networking permitted without license from IHS

Not for Resale

The American Society of Mechanical Engineers

AN AMERICAN NATIONAL STANDARD

MEASUREMENT OF FLUID FLOW USING SMALL BORE PRECISION ORIFICE METERS

ASME MFC-14M–2003

(Revision of ASME MFC-14M–2001)

Copyright ASME International
Provided by IHS under license with ASME
No reproduction or networking permitted without license from IHS
Not for Resale

Date of Issuance: April 17, 2003

This Standard will be revised when the Society approves the issuance of a new edition. There will be no addenda issued to this edition.

ASME will issue written replies to inquiries concerning interpretations of technical aspects of this Standard. Interpretations are published on the ASME Web site under the Committee Pages at http://www.asme.org/codes/ as they are issued.

ASME is the registered trademark of The American Society of Mechanical Engineers.

This code or standard was developed under procedures accredited as meeting the criteria for American National Standards. The Standards Committee that approved the code or standard was balanced to assure that individuals from competent and concerned interests have had an opportunity to participate. The proposed code or standard was made available for public review and comment that provides an opportunity for additional public input from industry, academia, regulatory agencies, and the public-at-large.

ASME does not "approve," "rate," or "endorse" any item, construction, proprietary device, or activity.

ASME does not take any position with respect to the validity of any patent rights asserted in connection with any items mentioned in this document, and does not undertake to insure anyone utilizing a standard against liability for infringement of any applicable letters patent, nor assume any such liability. Users of a code or standard are expressly advised that determination of the validity of any such patent rights, and the risk of infringement of such rights, is entirely their own responsibility.

Participation by federal agency representative(s) or person(s) affiliated with industry is not to be interpreted as government or industry endorsement of this code or standard.

ASME accepts responsibility for only those interpretations of this document issued in accordance with the established ASME procedures and policies, which precludes the issuance of interpretations by individuals.

No part of this document may be reproduced in any form,
in an electronic retrieval system or otherwise,
without the prior written permission of the publisher.

The American Society of Mechanical Engineers
Three Park Avenue, New York, NY 10016-5990

Copyright © 2003 by
THE AMERICAN SOCIETY OF MECHANICAL ENGINEERS
All Rights Reserved
Printed in U.S.A.

Copyright ASME International
Provided by IHS under license with ASME
No reproduction or networking permitted without license from IHS

Not for Resale

CONTENTS

Foreword iv
Committee Roster v
Correspondence With the MFC Committee vi

1 Scope and Field of Application 1

2 References and Related Documents 1

3 Symbols and Definitions 1

4 Principle of Measurement and Method of Computation 7

5 General Measurement Requirements 9

6 Installation Requirements 9

7 Discharge Coefficient and Empirical Equations 14

8 Uncertainties 16

9 Pressure Loss, $\Delta\omega$ (h) 17

Figures

1 Standard Orifice Plate 11
2 Corner Tap Geometry 13
3 Location for Orifice Flange Pressure Taps 14
4 Honed Small Bore Orifice Flow Section With Corner Taps 15

Tables

1 Symbols 2
2 Minimum Recommended Upstream Straight Length Required to Achieve an Uncertainty of ±0.75% 10

Copyright ASME International
Provided by IHS under license with ASME
No reproduction or networking permitted without license from IHS
Not for Resale

FOREWORD

Before the publication of this Standard, there was no standard covering the measurements of fluid flows using small bore precision orifice meters (nominal line sizes of $\frac{1}{4}$ in. through $1\frac{1}{2}$ in.) using differential pressure devices. Most people have used ASME fluid meters for guidance or obtained information from the manufacturers of proprietary devices.

This Standard has been prepared by the ASME Committee on Measurement of Fluid Flows in Closed Conduit (MFC).

Suggestions for improvement of this Standard should be sent to: Secretary, MFC, The American Society of Mechanical Engineers, Three Park Avenue, New York, NY 10016.

This Standard was approved as an American National Standard on February 26, 2003.

Copyright ASME International
Provided by IHS under license with ASME
No reproduction or networking permitted without license from IHS
Not for Resale

ASME MFC COMMITTEE
Measurement of Fluid Flow in Closed Conduits

(The following is the Roster of the Committee at the time of approval of this Standard.)

OFFICERS

Z. D. Husain, *Chair*
R. J. DeBoom, *Vice Chair*
R. L. Crane, *Secretary*

COMMITTEE PERSONNEL

C. J. Blechinger, Consultant
R. W. Caron, Visteon Corp.
G. P. Corpron, Consultant
R. L. Crane, The American Society of Mechanical Engineers
R. J. DeBoom, Daniel Measurement and Control
P. G. Espina, Controlotron Corp.
D. Faber, Badger Meter, Inc.
R. H. Fritz, Saudi Aramco
F. D. Goodson, Daniel Measurement and Control
Z. D. Husain, Chevron Texaco
E. H. Jones, Jr., Chevron Petroleum Technologies
T. M. Kegel, Colorado Engineering Experiment Station, Inc.
C. G. Langford, Cullen G. Langford, Inc.
W. M. Mattar, Invensys / Foxboro Co.
G. E. Mattingly, National Institute of Standards and Technology
D. R. Mesnard, Direct Measurement Corp.
R. W. Miller, R. W. Miller and Associates, Inc.
A. M. Quraishi, American Gas Association
B. K. Rao, Consultant
W. F. Seidl, Colorado Engineering Experiment Station, Inc.
D. W. Spitzer, Cooperhill and Pointer, Inc.
D. H. Strobel, Consultant
J. H. Vignos, Consultant
D. E. Wiklund, Rosemount, Inc.
D. C. Wyatt, Wyatt Engineering and Design

SUBCOMMITTEE 23 — SMALL BORE ORIFICE METERS

Z. D. Husain, *Chair,* Chevron Texaco
R. L. Crane, *Secretary,* The American Society of Mechanical Engineers
G. P. Corpron, Consultant
G. E. Mattingly, National Institute of Standards and Technology
R. J. W. Peters, McCrometer
D. E. Wiklund, Rosemount, Inc.
D. C. Wyatt, Wyatt Engineering and Design

Copyright ASME International
Provided by IHS under license with ASME
No reproduction or networking permitted without license from IHS
Not for Resale

CORRESPONDENCE WITH THE MFC COMMITTEE

General. ASME Standards are developed and maintained with the intent to represent the consensus of concerned interests. As such, users of this Standard may interact with the Committee by requesting interpretations, proposing revisions, and attending committee meetings. Correspondence should be addressed to:

Secretary, MFC Standards Committee
The American Society of Mechanical Engineers
Three Park Avenue
New York, NY 10016-5990

Proposing Revisions. Revisions are made periodically to the Standard to incorporate changes that appear necessary or desirable, as demonstrated by the experience gained from the application of the Standard. Approved revisions will be published periodically.

The Committee welcomes proposals for revisions to this Standard. Such proposals should be as specific as possible, citing the paragraph number(s), the proposed wording, and a detailed description of the reasons for the proposal, including any pertinent documentation.

Interpretations. Upon request, the MFC Committee will render an interpretation of any requirement of the Standard. Interpretations can only be rendered in response to a written request sent to the Secretary of the MFC Standards Committee.

The request for interpretation should be clear and unambiguous. It is further recommended that the inquirer submit his request in the following format:

Subject:	Cite the applicable paragraph number(s) and the topic of the inquiry.
Edition:	Cite the applicable edition of the Standard for which the interpretation is being requested.
Question:	Phrase the question as a request for an interpretation of a specific requirement suitable for genral understanding and use, not as a request for an approval of a proprietary design or situation. The inquirer may also include plans or drawings which are necessary to explain the question; however, they should not contain proprietary names or information.

Requests that are not in this format will be rewritten in this format by the Committee prior to being answered, which may inadvertently change the intent of the original request.

ASME procedures provide for reconsideration of any interpretation when or if additional information that might affect an interpretation is available. Further, persons aggrieved by an interpretation may appeal to the cognizant ASME Committee or Subcommittee. ASME does not "approve", "certify", "rate", or "endorse" any item, construction, proprietary device, or activity.

Attending Committee Meetings. The MFC Committee regularly holds meetings, which are open to the public. Persons wishing to attend any meeting should contact the Secretary of the MFC Standards Committee.

Copyright ASME International
Provided by IHS under license with ASME
No reproduction or networking permitted without license from IHS
Not for Resale

MEASUREMENT OF FLUID FLOW USING SMALL BORE PRECISION ORIFICE METERS

1 SCOPE AND FIELD OF APPLICATION

This Standard specifies the geometry and method of use (installation and flowing conditions) for orifice meters of 6 mm to 40 mm (¼ in. to 1½ in.) line size when they are inserted in a conduit running full. It also gives necessary information for calculating flow rate and its associated uncertainty.

It applies only to differential pressure devices in which the flow remains subsonic throughout the measuring section, flow is steady or varies only slowly with time, and the fluid is considered single-phase. In addition, the uncertainties are given in the appropriate sections of this Standard for each of these devices within the pipe size and Reynolds number limits, which are specified.

This Standard covers devices for which sufficient calibrations have been made to enable the specification of coherent systems of application and to enable calculations to be made with certain predictable limits of uncertainty.

The devices introduced into the pipe are called primary devices. The term *primary device* also includes the pressure taps and the associated upstream and downstream piping. All other instruments or devices required for the measurement or transmission of the differential pressures are known as secondary elements, and in combination are referred to as the secondary devices. This Standard covers the primary devices; the secondary devices will be mentioned only occasionally, as and when necessary for the proper operation of the primary device.

The different primary devices covered in this Standard are

(a) orifice plates used with corner pressure taps;

(b) orifice plates used with flange pressure taps;

(c) specially designed orifice meters with integral fittings.

2 REFERENCES AND RELATED DOCUMENTS

ASME MFC-1M Glossary of Terms Used in the Measurement of Fluid Flow in Pipes

ASME MFC-2M Measurement Uncertainty for Fluid Flow in Closed Conduits

ASME MFC-8M Fluid Flow in Closed Conduits — Connections for Pressure Signal Transmissions Between Primary and Secondary Devices

Filban, T.J. 1961. The Orifice Flow Section for Metering Low Rates of Flow. *Instruments and Control Systems* (February).

Filban, T.J. 1958. Orifice Metering of Small Volumes in Meter Tubes of ½ in., ¾ in., and 1 in. Sizes. Paper presented at the ASME Application Gas Measurement Short Course.

Filban, T.J., and W.A. Griffin. 1959. Small-Diameter-Orifice Metering. *Transactions of the ASME — Journal of Basic Engineering*. Paper No. 59-A-101.

Fluid Meters, Their Theory and Application. 1971. 6th ed.

Publisher: American Society of Mechanical Engineers (ASME International), Three Park Avenue, New York, NY 10016; Order Department: 22 Law Drive, Box 2300, Fairfield, NJ 07007

ISO 2186 Fluid Flow in Closed Conduits — Connections for Pressure Signal Transmissions Between Primary and Secondary Devices

ISO 4006 Measurement of Fluid Flow in Closed Conduits — Vocabulary and Symbols

ISO 4185 Measurement of Liquid Flow in Closed Conduits — Weighing Method

ISO 5168 Measurement of Fluid Flow — Evaluation of Uncertainties

ISO/DIS 8316 Measurement of Liquid Flow in Closed Conduits — Method by Collection of the Liquid in a Volumetric Tank

Publisher: International Organization for Standardization (ISO), 1 rue de Varembé, Case Postale 56, CH-1211, Genève, Switzerland/Suisse

3 SYMBOLS AND DEFINITIONS

The vocabulary and symbols used in this Standard are defined in ASME MFC-1M and ISO 4006. The SI and customary (U.S.) measurement units are used throughout, with the SI units listed first and the customary units following in parentheses, whenever stated.

3.1 Symbols

Table 1 reproduces the symbols and their respective SI and customary dimensional units that are used in this Standard.

Copyright ASME International
Provided by IHS under license with ASME
No reproduction or networking permitted without license from IHS
Not for Resale

Table 1 Symbols

Symbols	Represented Quantity	Dimensions M: Mass L: Length T: Time θ: Temperature	SI Unit	U.S. Unit [Note (1)] Customary
C	Discharge coefficient	dimensionless	...	...
C_p	Specific heat at constant pressure	$L^2\ T^{-2}\ \theta^{-1}$	J/(kg · mole · K)	BTU/(lb_m · mole · °R)
C_v	Specific heat at constant volume	$L^2\ T^2\ \theta^{-1}$	J/(kg · mole · K)	BTU/(lb_m · mole · °R)
c	Speed of sound	LT^{-1}	m/s	ft/s
D	Upstream internal pipe diameter at flowing conditions	L	m	in.
d	Diameter of orifice of primary device at flowing conditions	L	m	in.
d_{meas}	Diameter at a specified measured temperature	L	m	in.
E	Orifice plate thickness	L	m	in.
e_r	Relative uncertainty	dimensionless	...	...
F_a	Thermal expansion correction factor	dimensionless	...	...
G_i	Ideal specific gravity (gas), MW of gas/MW of air	dimensionless	...	...
	MW of gas = Molecular weight of the gas	M	kg/mole	lb_m/mole
	MW of air = Molecular weight of air = 28.96247	M	kg/mole	lb_m/mole
G	Relative density (liquids), [Specific Gravity]	dimensionless	...	...
g_c	Conversion constant	dimensionless	kg · m/(N · s^2)	32.17405 lb_m · ft/(lb_f · s^2)
g_o	Standard acceleration due to gravity, 9.806650 m/s^2 [32.17405 ft/s^2]	LT^{-2}	m/s^2	ft/s^2
h	Pressure loss	[see $\Delta\omega$ (h)]	...	...
h_w	Differential pressure	[see $\Delta\rho$ (h_w)]	...	...
k (ϵ)	Uniform equivalent roughness	L	m	in.
L	Ratio of pressure tap spacing to D, $L = \ell/D$	dimensionless	...	...
ℓ	Pressure tap spacing from orifice plate	L	m	in.
n	Polytropic exponent	dimensionless	...	...
p	Static pressure of the fluid	$ML^{-1}\ T^{-2}$	Pa	lb_f/in.^{2}

Copyright ASME International
Provided by IHS under license with ASME
No reproduction or networking permitted without license from IHS
Not for Resale

Table 1 Symbols (Cont'd)

Symbols	Represented Quantity	Dimensions *M*: Mass *L*: Length *T*: Time *θ*: Temperature	SI Unit	U.S. Unit [Note (1)] Customary
p_c	Absolute critical pressure of a substance	$ML^{-1}\ T^{-2}$	Pa	$lb_f/in.^2$
p_n	Static pressure of flowing fluid at upstream pressure tap	$ML^{-1}\ T^{-2}$	Pa	$lb_f/in.^2$
p_{f2}	Static pressure of flowing fluid at downstream tap	$ML^{-1}\ T^{-2}$	Pa	$lb_f/in.^2$
q_m	Mass rate of flow, $q_m = \rho_f q_v = \rho_b q_{vb}$	MT^{-1}	kg/s	lb_m/s
q_v	Volume rate of flow at flowing conditions	$L^3\ T^{-1}$	m^3/s	ft^3/s
q_{vb}	Volume rate of flow at base conditions, $q_{vb} = q_v \rho_f \rho_b$	$L^3\ T^{-1}$	m^3/s	ft^3/s
R	Radius	L	m	in.
R_a	Arithmetical mean deviation from the mean line of the profile (for further details refer to ISO/R-468)	L	m	in.
R_D, R_d	Reynolds number referred to D or d	dimensionless	...	...
T	Absolute temperature of the flowing fluid	θ	K	°R
t	Temperature of the flowing fluid	θ	°C	°F
t_{meas}	Temperature at which dimension of the pipe and plates are measured	θ	°C	°F
t_r	Reference Temperature	θ	°C	°F
U	Mean axial velocity of the fluid in the pipe	LT^{-1}	m/s	ft/s
Y	Expansion factor	[see ϵ (Y)]	...	...
Z	Gas (vapor) compressibility factor	dimensionless	...	...
α_P	Thermal expansion factor of the pipe	θ^{-1}	(m/m)/°C	(in./in.)/°F
α_{PE}	Thermal expansion factor of the primary element	θ^{-1}	(m/m)/°C	(in./in.)/°F
β	Diameter ratio, $\beta = d/D$, at flowing conditions	dimensionless	...	...
Δp (h_w)	Differential pressure [Note (2)]	$ML^{-1}\ T^{-2}$	Pa	$(in.\text{-}H_2O)_{go}$, T $lb_f/in.^2$
ω (h)	Pressure loss	$ML^{-1}T^{-2}$	Pa	$lb_f/in.^2$
ϵ (Y)	Expansion factor	dimensionless	...	...
ϵ_1 (Y_1)	Expansion factor based on upstream pressure	dimensionless	...	...
ϵ_2 (Y_2)	Expansion factor based on downstream pressure	dimensionless	...	...

Copyright ASME International
Provided by IHS under license with ASME
No reproduction or networking permitted without license from IHS

Not for Resale

Table 1 Symbols (Cont'd)

Symbols	Represented Quantity	Dimensions *M*: Mass *L*: Length *T*: Time θ: Temperature	SI Unit	U.S. Unit [Note (1)] Customary
κ	Isentropic exponent	dimensionless	...	...
κ_1	Isentropic exponent based on upstream measurements	dimensionless	...	...
κ_2	Isentropic exponent based on downstream measurements	dimensionless	...	...
κ_m	Mean isentropic exponent	dimensionless	...	...
μ	Absolute viscosity of the fluid	$ML^{-1}T^{-1}$	Pa · s	$lb_m/ft \cdot s$ g/(cm·s), Poise [Note (3)]
ν	Kinematic viscosity of the fluid, $\nu = \mu/\rho$	$L^2 T^{-1}$	m^2/s	ft^2/s
ξ	Relative pressure loss	dimensionless	...	...
ρ_f	Density of flowing fluid	ML^{-2}	kg/m^3	lb_m/ft^3
ρ_b	Density of fluid at base conditions	ML^{-3}	kg/m^3	lb_m/ft^3
$\rho_{w,\ 68°}$	Density of water at 68°F and 14.696 psia; 62.32 lb_m/ft^3 [Note (4)]	ML^{-3}	kg/m^3	lb_m/ft^3
τ	Pressure ratio, $\tau = p_2/p_1$	dimensionless	...	...
ϕ	Total angle of the divergent	dimensionless	radian	degree

GENERAL NOTES:

(a) Customary (U.S.) symbols are given in parentheses when different from SI.

(b) Subscript 1 refers to the upstream conditions.

(c) Subscript 2 refers to the downstream conditions.

(d) Subscript *f* refers to the flowing conditions.

(e) Subscript *r* refers to reference temperature of 20°C (68°F).

NOTES:

(1) In this Standard, customary (U.S.) units (in., psia, etc.) are given in the equations for the convenience of the user. They are often given in parentheses after the SI units.

(2) In the customary system of units, the in.-H_2O is a pressure unit and is equal to the difference between the pressure at the bottom of a 1-in. column of water at a temperature of 68°F, standard acceleration due to gravity of $g_o = 32.17405$ ft/sec^2, and standard atmospheric pressure of 14.696 psia on top of the water.

$$1 \text{ in.-}H_2O = 0.0360623 \text{ lb}_f/\text{in.}^2 = 0.2486411 \text{ kPa}$$

(3) In this Standard, for U.S. practice, centipoise is used for absolute viscosity and replaces the previous customary unit, $lb_m/(ft \cdot s)$.

$$\mu_{cP} = 1488.164 \text{ lb}_m/(\text{ft} \cdot \text{s})$$

$$\mu_{cP} = \frac{(\text{lb}_f \cdot \text{s})}{\text{ft}^2} \frac{(g_c\ 1488.164)}{32.17405}$$

(4) The value quoted in the Standard for density of water at 68°F and 14.696 psia is approximately 62.32 lbm. Refer to the latest version of the ASME steam table for more significant digits, if necessary.

Copyright ASME International
Provided by IHS under license with ASME
No reproduction or networking permitted without license from IHS Not for Resale

3.2 Definitions

3.2.1 Pressure Measurement

differential pressure: difference between the static pressure measured on the upstream side and on the downstream side of the primary device. For installations other than horizontal, the lead lines must be installed in accordance with ASME MFC-8M (see also ISO 2186) to eliminate errors due to elevation differences between the taps. The term *differential pressure* is applicable only if the pressure taps are in the positions specified by this Standard for each standard primary device.

pressure ratio: the absolute static pressure at the downstream pressure tap, divided by the pressure at the upstream pressure tap, p_{f2}/p_{f1}.

pressure tap: hole or annular slot in a flange, fitting, or the wall of a pipe of a primary device that is flush with the inside surface.

static pressure of a fluid flowing through a primary device: pressure measured by connecting a pressure measuring device to a pressure tap in the plane of the differential pressure taps. Absolute static pressure is used in the equations presented in this Standard.

3.2.2 Primary Devices

diameter ratio of a primary element in a given pipe: the diameter of the orifice divided by the internal diameter of the measuring pipe upstream of the primary element.

orifice: opening of minimum cross-sectional area in a primary element. Standard primary element orifices are circular and coaxial with the pipe line.

orifice plate: thin plate in which a circular concentric hole has been machined. A standard orifice plate is described as a thin plate and with a sharp edge. The thickness of the plate is small compared with the hole diameter (bore), and the upstream edge of the orifice is sharp and square.

small bore integral orifice fittings: the primary element design used with precision bore orifice flowmeters having integral fittings may not conform to the designs specified in this Standard. Users of this Standard are therefore directed to consult manufacturers for design and performance limitations of these flowmeters.

3.2.3 Flow

discharge coefficients: calibration of standard primary devices by means of nominally incompressible fluids (liquids) shows that the discharge coefficient, C, a dimensionless number defined by the following relation in a given installation, is dependent only on the Reynolds number for a given primary device. The discharge coefficient is given by the following:

SI Units

$$C = \frac{q_m}{\frac{\pi}{4} d^2 \sqrt{\frac{2\Delta p \cdot \rho_f}{1 - \beta^4}}} \tag{3-1a}$$

Customary Units

$$C = \frac{q_m}{0.09970190 d^2 \sqrt{\frac{h_w \cdot \rho_f}{1 - \beta^4}}} \tag{3-1b}$$

where for customary units the constant 0.0997019 is as follows:

$$\frac{\pi}{4} \frac{1}{12^2} \sqrt{\frac{2 g_o \rho_{w,\,68°F}}{12}} \tag{3-2}$$

and values of g_o and $\rho_{w,\,68°F}$ are 32.17405 and 62.31572, respectively.

The numerical value of C is the same for different installations whenever such installations are geometrically similar and flows are characterized by identical Reynolds numbers. [See Eqs. (3.13) and (3.14).] For liquids, $\rho_f = \rho_{f1} = \rho_{f2}$. Empirical equations for the discharge coefficient, C, of this Standard were based on data established experimentally (see para. 7). In these equations, the temperature of the orifice and the pipe is at the flowing fluid temperature.

expansion factor (or expansibility): calibration of a given primary device by means of a compressible fluid (gas), shows that the ratio is dependent on the value of the Reynolds number, as well as on the values of the differential pressure and variations in the isentropic exponent of the gas.

The method adopted for representing these variations consists in multiplying the discharge coefficient of the primary device as determined by direct liquid calibration for the same value of Reynolds number, by the expansion factor defined by the following relationship:

SI Units

$$\epsilon_1 = \frac{q_m}{\frac{\pi}{4} C d^2 \sqrt{\frac{2\Delta p \rho_{f1}}{1 - \beta^4}}} \tag{3-3a}$$

Customary Units

$$Y_1 = \frac{q_m}{0.09970190 C d^2 \sqrt{\frac{h_w \rho_{f1}}{1 - \beta^4}}} \tag{3-3b}$$

The value of ϵ_1 (Y_1) is equal to unity when the fluid is incompressible (liquid) and less than unity when the fluid is compressible (gas or vapor). This factor essentially corrects for density differences between pressure taps due to expansion of the gas to the lower pressure at the downstream pressure tap. If a downstream pressure tap is used to obtain the density, the downstream expansion factor is defined as follows:

Copyright ASME International
Provided by IHS under license with ASME
No reproduction or networking permitted without license from IHS

Not for Resale

SI Units

$$\epsilon_2 = \frac{q_m}{\frac{\pi}{4} Cd^2 \sqrt{\frac{2\Delta p \rho_{f2}}{1 - \beta^4}}} \quad (3\text{-}4a)$$

Customary Units

$$Y_2 = \frac{q_m}{0.09970190 Cd^2 \sqrt{\frac{h_w \rho_{f2}}{1 - \beta^4}}} \quad (3\text{-}4b)$$

This method of correction is possible because experimental results show that ϵ_1 (Y_1) is practically independent of the Reynolds number for a given diameter ratio of a primary device, but is a function of the isentropic exponent of the flowing fluid and the differential pressure ratio.

The numerical values of ϵ_1 (Y_1) for orifices given in this Standard have been based on experimental data.

The relationship between ϵ_1 (Y_1) and ϵ_2 (Y_2) is as follows:

SI Units

$$\epsilon_2 = \epsilon_1 \sqrt{1 + \frac{\Delta p}{p_{f2}}} \quad (3\text{-}5a)$$

Customary Units

$$Y_2 = Y_1 \sqrt{1 + \frac{h_w}{27.73 p_{f2}}} \quad (3\text{-}5b)$$

where ϵ_1 (Y_1) is to be calculated using:

SI Units

$$\frac{\Delta p}{p_{f1}} = \frac{\Delta p}{p_{f2} + \Delta p} \quad (3\text{-}6a)$$

Customary Units

$$\frac{h_w}{27.73 \cdot p_{f1}} = \frac{h_w}{27.73 \cdot p_{f2} + h_w} \quad (3\text{-}6b)$$

NOTE: The value of 27.73 is derived from conversion of psi to inches of water at 68°F as defined in Table 1.

isentropic exponent, κ: in the expansion of a gas or vapor through a differential producer, the variation in the local fluid density introduces a compressible flow effect on the flow measurement that is taken into account by the expansion factor, defined by Eqs. (3-3), (3-4), and (3-5), and used in Eqs. (7-3) and (7-4).

The relationship between pressure and density for the expansion is assumed to be as follows:

$$\left(\frac{p}{\rho}\right)^n = \text{constant} \quad (3\text{-}7)$$

where n is the polytropic exponent

The isentropic exponent, a thermodynamic state property, is defined as follows:

$$\kappa = \frac{\rho}{p}\left(\frac{\delta p}{\delta \rho}\right)_s = \frac{\rho c^2}{p} = \frac{C_p}{C_v}\frac{\rho}{p}\left(\frac{\delta p}{\delta \rho}\right)_T \quad (3\text{-}8)$$

where c is the speed of sound.

The isentropic exponent is, in general, a function of the fluid and its pressure and temperature, and can be considered a normalized slope of the isentrope in the p-ρ plane or a normalized speed of sound, c. For an ideal gas at zero gage pressure, the isentropic exponent defined by Eq. (3-8) above reduces to the ratio of the ideal-gas specific heats as follows:

$$\kappa = \frac{C_p}{C_v} \quad (3\text{-}9)$$

In practice, it is sufficiently accurate to substitute the ratio of ideal-gas specific heats for the isentropic exponent, provided the pressure is less than 0.25 times the critical pressure.

A comparison of Eqs. (3-8) and (3-9) shows that the polytropic exponent, n, is equal to the isentropic exponent, κ, only if κ is constant along the isentrope. In practice, an average or effective mean value of the isentropic exponent, κ_m, is used to estimate the polytropic exponent.

The average or effective mean value is the sum of the value of the isentropic exponent, κ, at the high pressure and the value at the low pressure divided by two.

For low pressure differentials, $\Delta p/p \le 0.04$ ($h_w/p \le 1.1$), and the isentropic exponent may be calculated using:

SI Units

$$\kappa = \frac{C_p}{(C_p - 8\,314)} \quad (3\text{-}10a)$$

Customary Units

$$\kappa = \frac{C_p}{(C_p - 1.986)} \quad (3\text{-}10b)$$

rate of flow of fluid passing through a primary device: mass or volume of fluid passing through the orifice per unit time. In all cases, it is necessary to state explicitly whether the mass rate of flow expressed in mass per time unit or the volume rate of flow expressed in volume per time unit is being used.

The mass rate of flow can be determined, since it is related to the pressure differential within the uncertainty stated in this Standard, by the following formula:

SI Units

$$q_m = \frac{\pi}{4} C \epsilon_1 d^2 \sqrt{\frac{2\Delta p \rho_{f1}}{1 - \beta^4}} \quad (3\text{-}11a)$$

Copyright ASME International
Provided by IHS under license with ASME
No reproduction or networking permitted without license from IHS
Not for Resale

Customary Units

$$q_m = 0.09970190CY_1d^2\sqrt{\frac{h_w\rho_{f1}}{1-\beta^4}} \quad (3\text{-}11b)$$

or for a downstream measurement:

SI Units

$$q_m = \frac{\pi}{4}C\epsilon_2 d^2\sqrt{\frac{2\Delta p\rho_{f2}}{1-\beta^4}} \quad (3\text{-}12a)$$

Customary Units

$$q_m = 0.09970190CY_2d^2\sqrt{\frac{h_w\rho_{f2}}{1-\beta^4}} \quad (3\text{-}12b)$$

when d is at the flowing temperature.

NOTE: For liquids, ϵ_1 (Y_1) and ϵ_2 (Y_2) are 1.0.

Reynolds number: in this Standard it is referred to as the fluid properties (density and viscosity at the flowing condition) immediate upstream of the primary element and either (a) the upstream diameter of the pipe or (b) the orifice (bore) or throat diameter of the primary device. Equations for calculating the Reynolds number are as follows:

SI Units

$$R_D = \frac{U_1D}{\nu_1} = \frac{4q_m}{\pi\mu_1D} \quad (3\text{-}13a)$$

Customary Units

$$R_D = \frac{U_1D}{12\nu_1} = \frac{22\,738q_m}{\mu_1D} \quad (3\text{-}13b)$$

$$R_d = \frac{R_D}{\beta} \quad (3\text{-}14)$$

The value of the volume rate of flow may be substituted at flowing or base conditions to obtain the Reynolds number since

$$q_m = q_v \cdot \rho_f \quad (3\text{-}15)$$

$$q_m = q_{vb} \cdot \rho_b \quad (3\text{-}16)$$

4 PRINCIPLE OF MEASUREMENT AND METHOD OF COMPUTATION

4.1 Principle of Measurement

The principle of measurement is based on the installation of an orifice plate into a conduit when a flowing fluid is running full. The primary element causes a static pressure difference between a point upstream of the orifice plate and a point downstream of the plate. The flow rate can be determined from the measured value of this pressure difference, knowledge of the characteristics of the flowing fluid, and the circumstances under which the element is being used. It is assumed that the element is geometrically and fluid dynamically similar to one on which calibration was performed and that the conditions of use are the same (i.e., that it is in accordance with this Standard). The flow element must be calibrated if experimental data for the geometric and fluid dynamic similarity do not exist.

Calibration of flow meters can be performed using a range of techniques for both liquid and gas flows. These include:

(*a*) gravimetric and timing (see ISO 4185)

(*b*) volumetric and timing (see ISO 4373 and ISO 8316)

(*c*) comparison to master meters or other transfer standards traceable to an established or accepted state, national, or international standards agency (e.g., National Institute of Standards and Technology).

These calibrations can be performed in laboratory testing facilities via in situ tests. For in situ tests, the uncertainty statements of this Standard do not apply. Uncertainty for the in situ calibration includes the overall uncertainty of the calibration system deployed to calibrate the meter in situ.

From the mass flow rate determined by Eqs. (3-11) and (3-12), the value of the volume rate of flow at flowing or a selected base pressure and temperature can be calculated by using Eqs. (3-15) and (3-16).

4.2 Method of Sizing the Bore of the Selected Primary Element

This Section applies to precision bore orifice flowmeters having corner and flange tap designs that conform to the design criteria of this Standard. Users of this Standard should consult manufacturers for the sizing requirements of orifice meters that do not conform to these criteria. Some orifice flowmeters with integral orifice fittings may fall into this category.

When it is necessary to have a specified Δp (h_w) for a given flow rate, the throat diameter, d, can be calculated using Eqs. (3.11) and (3.12). The process is stated by calculating an initial estimate for β from Δp (h_w) assuming ϵ (Y) = 1 and C = 0.6. A final approximation is obtained through an iterative process.

The iteration method shown below to select a bore is an example. Determination of the bore through iterations using another variable (e.g., Reynolds number, velocity, etc.) is also possible.

In accurate sizing of the bore of any primary element, it is necessary to use an iterative procedure because the discharge coefficient, C, and the expansion factor, ϵ (Y), are not initially known. These values are all β (d/D) ratio dependent. It is, therefore, necessary to iterate for β and then solve for the bore at the flowing temperature. By substituting the relationship $\beta^2D^2 = d^2$, Eqs. (3-11) and (3-12) can be rearranged to equate the known design factors to the β-dependent functions for iteration as follows:

Copyright ASME International
Provided by IHS under license with ASME
No reproduction or networking permitted without license from IHS

Not for Resale

SI Units

$$C\epsilon_1 \frac{\beta^2}{\sqrt{1-\beta^4}} = \frac{q_m}{\frac{\pi}{4} D^2 \sqrt{2\Delta p \rho_{f1}}} \quad (4\text{-}1a)$$

Customary Units

$$CY_1 \frac{\beta^2}{\sqrt{1-\beta^4}} = \frac{q_m}{0.09970190 D^2 \sqrt{h_w \rho_{f1}}} \quad (4\text{-}1b)$$

where all of the terms on the right hand side of the equation are known and are constant at the design conditions.

For an iteration process, the β value can be determined by rearranging Eq. (4-1) to obtain:

SI Units

$$\beta_n = \left[1 + \left(\frac{\frac{\pi}{4} D_f^2 C_{n-1} \epsilon_{1_{n-1}} \sqrt{2\Delta p \rho_{f1}}}{q_m} \right)^2 \right]^{-0.25} \quad (4\text{-}2a)$$

Customary Units

$$\beta_n = \left[1 + \left(\frac{0.09970190 D_f^2 Y_{1_{n-1}} C_{n-1} \sqrt{h_w \rho_{f1}}}{q_m} \right)^2 \right]^{-0.25} \quad (4\text{-}2b)$$

where subscript n is the nth iteration and $n - 1$ is the value of the $(n - 1)$th iteration. The bore is then $d = \beta_n D$. The iterative process can be terminated when the difference between the nth and the $(n - 1)$th results achieve a desired precision. A typical criterion is ±0.01%.

4.3 Computation of Flow Rate

For a given flow meter the actual measured dimensions of d and D should be used to calculate the flow rate as shown in para. 4.3.

4.3.1 The discharge coefficient, C, is dependent on R_D, which in turn is dependent on q_m. In such cases, the final value of C, and hence of q_m, is to be obtained by iteration from an initial chosen value of C (or R_D). Generally it may be convenient to adopt the value of C at a Reynolds number selected at 80% of maximum flow of the system being considered.

4.3.2 The value Δp represents the *differential pressure*, as defined in para. 3.2.1.

4.3.3 Values of d, D, and β in the formulae are the values at flowing conditions, and measurements taken at any other condition should be corrected for any possible expansion or contraction of the primary device and the pipe due to any change in the fluid temperature during the measurement.

It must be assumed that the primary device is at the same temperature as the pipe and therefore, the diameter ratio, β, will normally change insignificantly with temperature. The D and d values at any flowing temperature can be calculated with the following equations:

$$d_f = [\, 1 + \alpha_{PE} (t_f - t_{meas}) \,] d_{meas} \quad (4\text{-}3)$$

$$D_f = [\, 1 + \alpha_P (t_f - t_{meas}) \,] D_{meas} \quad (4\text{-}4)$$

When the orifice plate and the pipe are made of dissimilar materials with different thermal expansion coefficients, the true value of the ratio of d/D, or β can be calculated by using Eqs. (4-3) and (4-4).

The values that are obtained are then used in Eqs. (3-9) and (3-10) to calculate the discharge coefficient, C; the gas expansion factor, $\epsilon(Y)$; and the flow rate corresponding to particular values of Δp, the density, ρ, and the viscosity, ν, and the flowing conditions. When performing these calculations a consistent set of units must be used.

4.3.4 However, the flow rate, presented in Eqs. (3-11) and (3-12), is to be calculated using the values of d_f and D_f. The diameter ratio, β, at flowing condition is:

$$\beta = \frac{d_f}{D_f} = \frac{[1 + \alpha_{PE} (t_f - t_{meas})] d_{meas}}{[1 + \alpha_P (t_f - t_{meas})] D_{meas}} \quad (4\text{-}5)$$

The orifice plate and meter tube should be labelled, stamped, or tagged with their respective diameters. These dimensions should be stated at a reference temperature, t_r, of 20°C (68°F). Dimensions are to be calculated from the measured diameters for the temperature at the time of measurement. Dimensions of the plate should be two significant digits after the decimal for dimensions in millimeters and four significant digits after the decimal for dimensions in inches. If the diameters are stated as D_r or d_r, it indicates that the dimensions are at 20°C (68°F). If the temperature for the stamped dimensions is not clearly indicated, refer to the manufacturer for this information.

4.3.5 It is necessary to know the density and the viscosity of the fluid under the conditions of the flow measurement.

4.4 Determination of Gas (Vapor) Density

The density of the gas (vapor) is required to be known at either the plane of the upstream pressure tap or the plane of the downstream tap. It can either be measured directly with a densitometer or calculated from the fluid properties and Equations of State. A useful relation using ideal specific gravity is as follows:

SI Units

$$\rho_f = 0.003483407 \frac{p_f G_i}{Z_f T_f} \quad (4\text{-}6a)$$

Customary Units

$$\rho_f = 2.698825 \frac{p_f G_i}{Z_f T_f} \quad (4\text{-}6b)$$

For calculating the density of a gas or vapor at base conditions (ρ_b), the base temperature, pressure, and the

Copyright ASME International
Provided by IHS under license with ASME
No reproduction or networking permitted without license from IHS
Not for Resale

compressibility factors are substituted into Eq. (4-6).

4.4.1 The static pressure of the fluid shall be measured in the radial plane of the upstream or the downstream pressure tap, by means of a separate pressure tap or by connecting in common with the differential pressure measurement or by means of carrier ring taps (see para. 5). Flow in or out of the pressure measurement line may cause an error in the differential pressure measurement. Use of separate taps for static and differential pressure measurement can alter the lead line volume and may reduce this error if it is occurring.

4.4.2 Although the temperature of the fluid from which the density and viscosity can be determined is preferably the one in the upstream pressure tap plane, a well or protrusion located there may introduce errors. It may be assumed that the downstream and upstream temperatures are the same providing, for gas, that $p_2/p_1 \geq 0.85$, and therefore, the temperature of the fluid shall be measured downstream of the primary device. The thermometer well should take up as little space as possible but should have adequate penetration to correctly monitor the flowing temperature. The distance between it and the primary device shall be at least equal to $5D$ and a maximum distance of $15D$.

4.4.3 Any method of determining reliable values of the pressure, temperature, viscosity, and density of the fluid is acceptable, providing the locations of pockets, well, protrusions, etc., are within the requirements of this Standard, and do not interfere with the distribution of the flow (see Table 2).

5 GENERAL MEASUREMENT REQUIREMENTS

5.1 Primary Device

5.1.1 The primary device is defined as a metering section and an orifice plate. The tolerances for these are described in para. 6.

When the manufacturing characteristics and conditions of use for the primary devices are outside the limits given in this Standard, it is necessary to calibrate the primary device under, as nearly as practical, the actual conditions of use. This may be particularly true for some precision bore orifice flowmeters having integral fittings, and users of those meters should contact the manufacturer for relevant information about these flowmeters. After the calibration, additional uncertainties may be calculated only insofar as this Standard is followed. If this Standard is not followed, no guidance can be given.

5.1.2 To avoid greater uncertainties than those given in this Standard, it is recommended that a primary device used for flow measurement be visually checked periodically, more often if inspection shows that the edge sharpness, surface roughness, or plate flatness has changed enough to lack conformity with this Standard.

5.1.3 The coefficient of thermal expansion of the material used in the primary device (α_{PE}) and of the pipe (α_P) must be known if flowing temperature is different from that at which the diameters were measured. See paras. 4.3.3 and 4.3.4.

5.2 Type of Fluid

5.2.1 The fluid may be either compressible (gas) or incompressible (liquid).

5.2.2 The fluid shall for all practical purposes be physically and thermally homogeneous and of single phase through the primary device.

5.2.3 The density and viscosity of the fluid at the flowing conditions must be known; see para. 4.4 for determination of density for known pressure and temperature.

5.3 Flow Conditions

5.3.1 The rate of flow shall be constant or, in practice, vary only slowly with time to consider the flow as quasi-steady. This Standard does not provide guidance for the measurement of pulsating flow.

For information on pulsating flow measurement, see ISO Technical Report 3313, Measurement of Pulsating Fluid Flow by Means of Orifice Plates, Nozzles or Venturi Tubes, in Particular in the Case of Sinusoidal or Square Wave Intermittent Periodic Type Fluctuation.

5.3.2 The uncertainties specified in this Standard are valid only when there is no change of phase through the primary device. If liquid vaporization occurs in the primary element, it should be eliminated. This may be achieved by increasing the static pressure and/or reducing the temperature. If condensation is occurring with compressible fluid flow, it should be eliminated. This may be achieved by reducing the static pressure and/or increasing the temperature. To predict whether there is a phase change, the flow computation shall be performed on the assumption that the expansion is isothermal if the fluid is a liquid, or isentropic if the fluid is a gas, because the temperature of the transition is critical for gas.

5.3.3 If the fluid is a gas, the pressure ratio p_{f2}/p_{f1} as defined in para. 3.2.1 shall be equal to or greater than 0.85.

6 INSTALLATION REQUIREMENTS

This Standard covers three design concepts for precision bore orifice flowmeters. They are

(a) flange tap designs
(b) corner tap designs, and
(c) integral orifice fitting designs

Copyright ASME International
Provided by IHS under license with ASME
No reproduction or networking permitted without license from IHS
Not for Resale

Table 2 Minimum Recommended Upstream Straight Length Required to Achieve an Uncertainty of ±0.75%

	Upstream (Inlet) of the Primary Device						
β [Note (1)]	Single 90 deg Bend or Tee (Flow From One Branch Only)	Two or More 90 deg Bends in the Same Plane	Two or More 90 deg Bends in Different Planes	Reducer (2*D* to *D* Over a Length of 1.5*D* to 3*D*)	Expander (0.5*D* to *D* Over a Length of 1*D* to 2*D*)	Globe Valve Fully Open	Full Bore Ball or Gate Valve Fully Open
0.10	24	25	30	20	22	24	22
0.15	24	25	30	20	22	24	22
0.20	24	25	30	20	22	24	22
0.25	24	25	30	20	22	24	22
0.30	24	26	30	20	22	24	22
0.35	24	26	31	20	22	24	22
0.40	25	27	31	20	22	25	22
0.45	25	27	32	20	23	25	23
0.50	25	28	33	20	23	25	23
0.55	26	29	35	20	24	26	24
0.60	27	31	37	20	25	27	25
0.65	29	32	39	21	26	29	26
0.70	32	35	42	23	28	32	28
0.75	35	38	45	25	30	35	30
0.80	40	45	50	30	35	40	35

GENERAL NOTES:

(a) Minimum upstream straight pipe requirements for different pipe installations of proprietary precision bore orifice meters should be obtained from the manufacturer of the device.

(b) This table is valid only for those installations for which the pipe immediately upstream of the orifice plate conforms to para. 5. All straight lengths are expressed as multiples of the diameter, *D*, and shall be measured from the upstream face of the primary device. If the straight pipe lengths are increased, the measurement precision may improve, but data are not available to quantify the improvement.

(c) Interpolation for intermediate, β values can be used. Lengths given in Table 2 require no additional uncertainty, but the uncertainty for shorter lengths are not well enough known to be given in this Standard. A flow conditioner placed upstream of the orifice plate may reduce the minimum straight pipe requirements of Table 2, but data are not available as to the uncertainty limits or flow conditioner location.

NOTE:

(1) For all β values with abrupt symmetrical reduction having a diameter ratio of ≥ 0.5, the minimum upstream straight length required is 30*D*. No additional length of downstream pipe is necessary if the pipe fitting downstream of the meter is at least 10 diameters from the orifice plate. Minimum recommended straight pipe downstream of the orifice plate is 10*D*.

Flow meters having integral orifice fittings may not conform to the design specifications stated in this Standard. Manufacturers should be consulted for information pertaining to the installation and performance characteristics of these meters.

The installation requirements described in paras. 6.1 through 6.5 apply to the corner tap and flange tap designs, and para. 6.6 applies to integral orifice fitting designs.

6.1 General

6.1.1 The method of measurement applies only to fluids flowing through a pipeline of circular cross-section.

6.1.2 The pipe shall run full at the measuring section.

6.1.3 The primary device shall be installed in the pipe line at a position such that the flow conditions immediately upstream approach those of a fully developed velocity profile and are free from swirl. Such conditions may be expected to exist if the installation conforms to the requirements given in this Section.

6.1.4 The primary device shall be installed between two sections of straight cylindrical pipe over the length of which there is no obstruction or branch connection, other than those specified in this Standard. The pipe is considered straight when it appears to be reasonably so by visual inspection. The required minimum straight lengths of pipe, which conform to the description in this Standard, vary according to the piping arrangement, the type of primary device, and the diameter ratio.

6.1.5 No steps are allowed within 10*D* upstream of the orifice plate.

Copyright ASME International
Provided by IHS under license with ASME
No reproduction or networking permitted without license from IHS
Not for Resale

6.2 Metering Section

6.2.1 This Standard applies to line sizes that are nominally 6 mm, 12 mm, 18 mm, 25 mm, and 40 mm (¼ in., ½ in., ¾ in., 1 in., and 1½ in.).

6.2.2 The inside diameter of both the upstream and downstream sections of the meter tube (i.e., pipe and flanges) shall be circular and cylindrical within a tolerance of no more than ±0.025 mm (±0.001 in.).

6.2.3 The diameter of the meter used for all calculations shall be the average of four diameter measurement made at 6 mm (¼ in.) from the upstream face of the orifice plate location.

6.2.4 The surface roughness of the metering section shall be less than 0.25 μm (10 μin.). Surface irregularities within this tolerance are allowed.

6.2.5 The meter tube length shall be a minimum of 18*D* upstream and 8*D* downstream. However, additional straight lengths of ordinary pipe may be required by the recommendations of Table 2.

6.3 Orifice Plate

Refer to Fig. 1 for tolerances on and nomenclature for different parameters.

6.3.1 The orifice plate shall be perpendicular to the metering section within ±1 deg.

6.3.2 The orifice plate shall be centered within 0.4 mm (0.015 in.) of the meter section centerline.

6.3.3 The upstream face, *A*, of the plate (Fig. 1) shall be flat. It is considered as such when the maximum gap between it and a straight edge of length, *D*, laid across it anywhere is less than 0.01 $(D - d)/2$. It is assumed that the orifice plate mounting does not distort the plate.

6.3.4 The surface roughness of the orifice plate shall be less than 0.00127 mm (50 μin.).

6.3.5 There shall be no drain or vent holes in the orifice plate.

6.3.6 The orifice plate thickness, *E*, shall be no greater than 3.2 mm (⅛ in.).

6.3.7 The values of *E* measured at different points of the plate shall not differ among themselves by more than 0.001*D*.

6.3.8 The orifice edge thickness, *e*, shall not exceed 0.02*D* or 0.125*d*, whichever is smaller.

6.3.9 All plates must be beveled on the outlet side or the downstream side of the orifice unless their thickness (para. 6.3.6) is equal to or less than the orifice edge thickness (para. 6.3.8). If a bevel is required, the angle of bevel, *F*, shall be approximately 45 deg ±5 deg. If the bevel thickness $(E - e)$ is less than 0.8 mm (1/32 in.), the orifice plate thickness (*E*), should be decreased, so that

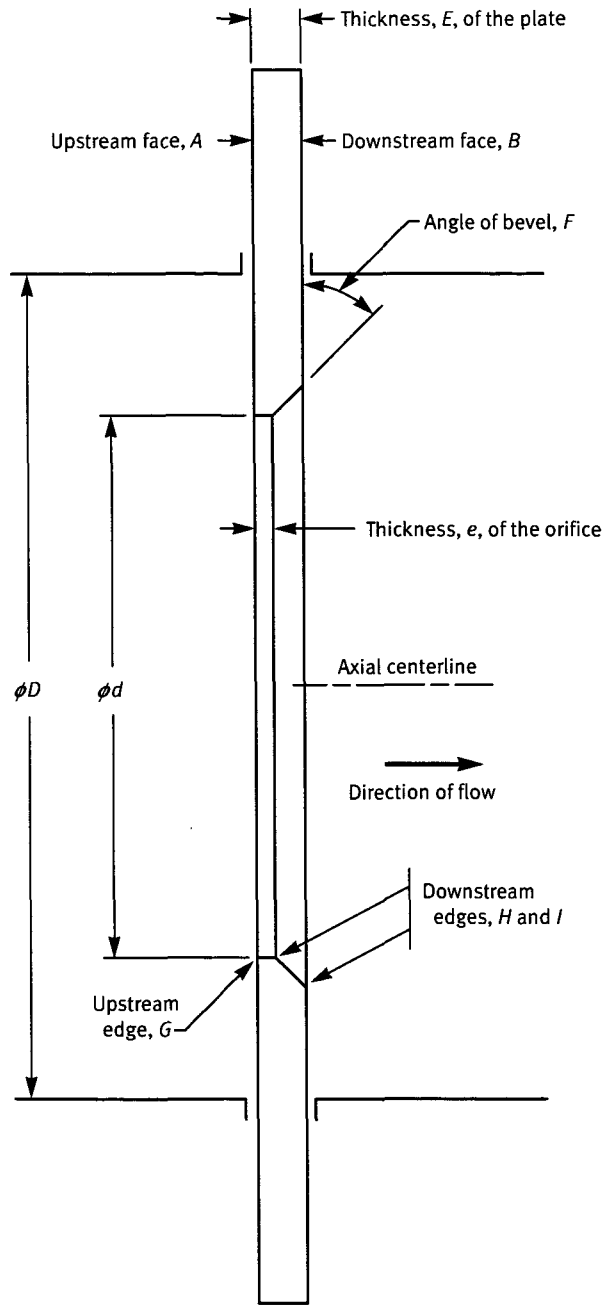

Fig. 1 Standard Orifice Plate

no bevel is required. This is to eliminate the inadvertent installation of an orifice plate with the bevel facing upstream, because beveled plates with bevel thickness less than 0.8 mm (1/32 in.) may be difficult to observe during the installation of the plate in the field.

6.3.10 The upstream edge, *G*, and the downstream edges, *H* and *I*, shall have neither wire-edges, burrs, nor, in general, any peculiarities visible to the naked eye.

6.3.11 The upstream edge shall be sharp. A sharp edge is one whose radius is less than or equal to 0.0004*d*

Copyright ASME International
Provided by IHS under license with ASME
No reproduction or networking permitted without license from IHS
Not for Resale

or 0.0025 mm (0.0001 in.), whichever is larger.

6.3.12 The value, d, of the diameter of the orifice shall be taken as the mean of the measurements of at least four diameters at approximately equal angular spacing, corrected for thermal expansion (see para. 4.3.3). No diameter measurement shall differ from another by more than 0.00762 mm (0.0003 in.).

6.3.13 The ratio $\beta = d/D$ must always be equal to or greater than 0.1 and less than or equal to 0.8 for corner tap configurations, and for flange tap configurations must always be equal to or greater than 0.15 and less than or equal to 0.7.

6.3.14 The plate can be manufactured of any material and in any way, provided it is and remains in accordance with the foregoing description during the flow measurements.

6.4 Pressure Taps

Small bore precision orifice meters can have corner taps or flange taps. Tap geometry and dimension limits are stated below.

For corner taps, the axes of the upstream and downstream taps may be located in different azimuthal planes. For flanged taps, the axes of the upstream and downstream taps should be located in the same azimuthal plane normal to the flow. At least one upstream pressure tap and one downstream pressure tap shall be provided for each primary device installed in one of the recommended standard positions.

NOTE: Although there are not enough data to make quantitative statements, there is good evidence that connecting two or more taps equally spaced around the periphery can materially reduce the effects of eccentricity, nonuniform flow profile, pulsating flow, etc. Annular chambers are often used for the interconnection. Care must be taken to avoid vapor condensation of liquid vaporization in the external lead lines.

A single plate can be used with several sets of pressure taps. To avoid flow-induced interference between taps on the same side of the orifice plate, taps shall be at least 45 deg apart.

6.4.1 Differential Pressure Taps for Corner Tap Configuration

6.4.1.1 The arrangement of the corner taps is shown in Fig. 2.

6.4.1.2 At least one upstream tap and one downstream tap shall be connected to the annular chamber for each primary device.

6.4.1.3 Edges of the annular chambers should be sharp and square.

6.4.2 Differential Pressure Taps for Flange Tap Configuration

6.4.2.1 The pressure taps are to be 1 in. (25.4 mm) upstream and downstream of the respective face of the plate as shown in Fig. 3.

6.4.2.2 The centerline of the taps shall meet the pipe centerline and be at right angles to within ±2 deg.

6.4.2.3 At the point of breakthrough, the edges should be flush with the internal surface of the pipe wall and be sharp. To ensure the elimination of all burrs or wire edges at the inner edge, rounding shall be permitted but shall be kept as small as possible and where it can be measured: its radius shall be less than 0.4 mm (0.015 in.). No irregularities shall appear inside the connecting hole, on the edges of the hole drilled in the pipe wall, or in the pipe wall close to the pressure tap.

6.4.2.4 Conformity of the pressure taps with paras. 6.4.1.1 and 6.4.1.2 can be judged visually.

6.4.2.5 Recommended diameter of the tap holes through the pipe wall or flange should be less than or equal to either 6 mm (0.25 in.) or $D/4$, whichever is smaller.

6.4.2.6 The pressure tap holes shall be circular and cylindrical. These holes may increase in diameter at any location away from the inner wall. However, if they are decreased, this decrease may not occur for at least 15 mm (0.625 in.) away from the pipe inner wall.

6.5 Upstream and Downstream Straight Lengths for Installation Between Various Fittings and the Primary Device

A typical small bore honed orifice-flow section with corner taps is shown in Fig. 4.

6.5.1 For no additional uncertainty of the discharge coefficient value when pipe fittings are installed upstream of the orifice plate, straight lengths of pipe must be installed upstream in addition to the minimum length recommended in para 6.2. Additional lengths for different upstream pipe fittings are listed in Table 2. However, additional pipe lengths may have surface roughness of commercial grade pipe. For the uncertainty value of discharge coefficient, refer to para. 6.2.5 for minimum lengths. No additional length of downstream pipe is necessary if the pipe fitting downstream of the meter is at least 10 diameters from the orifice plate.

For proprietary designs, consult the manufacturer's minimum recommended upstream straight pipe length requirements for different pipe fittings.

6.5.2 When either the upstream or the downstream straight lengths are shorter than the values given in Table 2, this Standard gives no information by which to predict the value of any further uncertainty to be taken into account.

6.5.3 The valves mentioned in Table 2 shall be fully opened. It is recommended that control of the flow rate

Copyright ASME International
Provided by IHS under license with ASME
No reproduction or networking permitted without license from IHS
Not for Resale

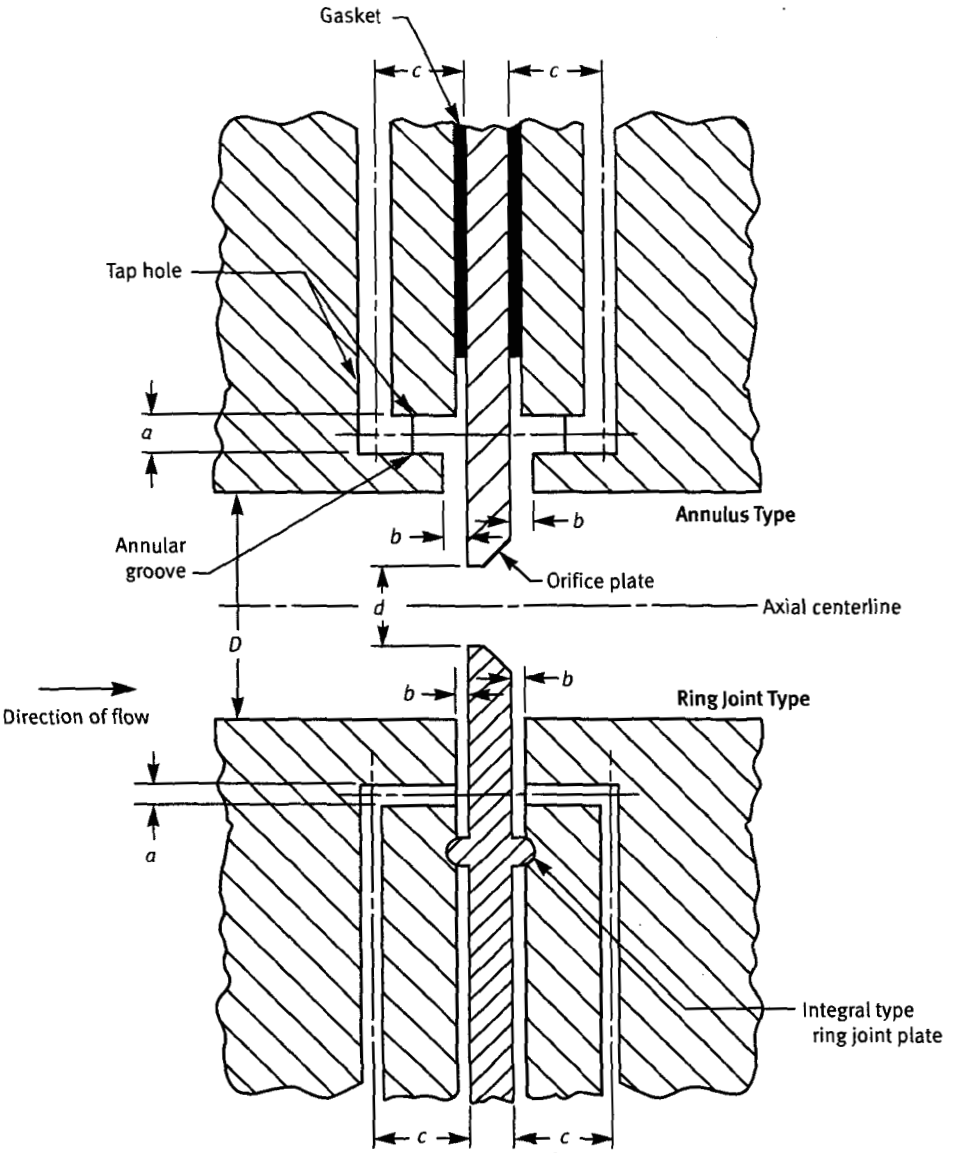

a = tap hole diameter 3.18 mm ($\frac{1}{8}$ in.) ≤ a ≤ 4.76 mm ($\frac{3}{16}$ in.)
b = thickness of slot 1.59 mm ($\frac{1}{16}$ in.) ≤ b ≤ 3.18 mm ($\frac{1}{8}$ in.)
c = can be any distance, but a dimension of 1 in. should be avoided so that the corner tap is not mistaken as a flange tap

Fig. 2 Corner Tap Geometry

be achieved by valves located downstream of the primary device. Isolating valves located upstream shall be preferably of the gate or ball type, full bore, and shall be fully opened.

6.5.4 After a single change of direction (bend or tee), it is recommended that if pairs of single taps are used, they be installed so that their axes will be perpendicular to the plane of the bend or tee.

6.5.5 The upstream lengths of pipe given in this Standard for given uncertainties are based on data taken in 1927 and analyzed in the 1930s. These uncertainties are to be treated as bias error limits as outlined in ASME MFC-2.

For important flow measurements, it is recommended to:

(a) use lengths longer than specified in Table 2 where possible;

(b) calibrate in situ or in a piping configuration identical to the actual meter run installation.

Copyright ASME International
Provided by IHS under license with ASME
No reproduction or networking permitted without license from IHS
Not for Resale

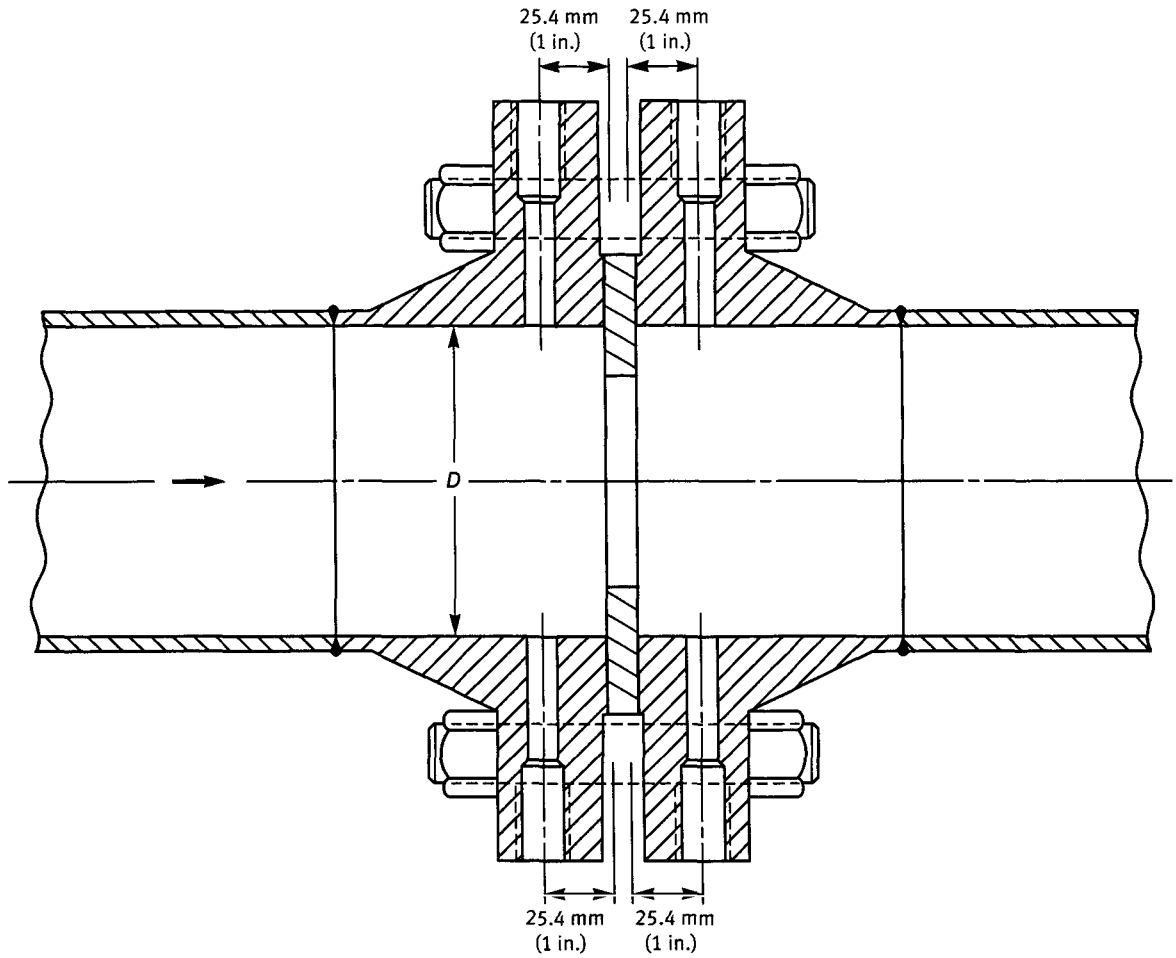

Fig. 3 Location for Orifice Flange Pressure Taps

6.6 Installation Requirements for Precision Bore Orifice Meters Having Integral Fittings

Orifice flowmeters having integral fittings that do not conform to the design specifications in this Standard may have different installation requirements than those given in paras. 6.5.1 through 6.5.6. Users of meters with nonconforming integral fitting design should therefore consult the manufacturers for installation requirements.

7 DISCHARGE COEFFICIENT AND EMPIRICAL EQUATIONS

The discharge coefficients of small bore precision orifice flowmeters vary with the design. The discharge coefficient for integral orifice fitting may also vary because of design differences between manufacturers. Users of integral orifice fittings should contact the manufacturer for the values of discharge coefficients and expansion factors (for compressible fluid) for their operating flowing conditions.

The empirical equation for discharge coefficients are given below for small bore precision orifice flowmeters.

7.1 Discharge Coefficient for Corner Taps

The discharge coefficient for nominal pipe diameters of 12 mm to 40 mm (½ in. to 1½ in.) is as follows:

$$C = \left[0.5991 + \frac{0.0044}{D} + \left(0.3155 + \frac{0.0175}{D} \right) (\beta^4 + 2\beta^{16}) \right] \sqrt{1 - \beta^4} + \left[\frac{0.52}{D} - 0.192 + \left(16.48 - \frac{1.16}{D} \right) (\beta^4 + 4\beta^{16}) \right] \sqrt{\frac{1 - \beta^4}{R_D}} \quad (7\text{-}1)$$

where

D = inside diameter of the meter tube, in.
R_D = pipe Reynolds number
β = orifice diameter/pipe diameter

Copyright ASME International
Provided by IHS under license with ASME
No reproduction or networking permitted without license from IHS
Not for Resale

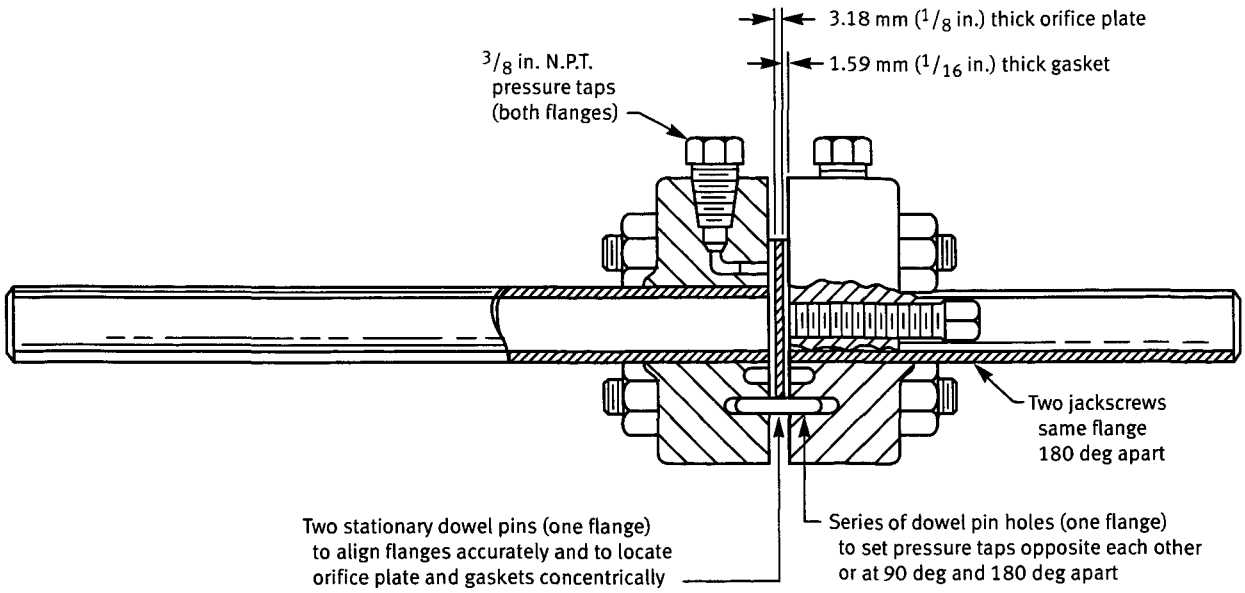

GENERAL NOTE: Tube ends may be threaded or flanged; to be done before final boring and honing.

Fig. 4 Honed Small Bore Orifice Flow Section With Corner Taps

The above equation is applicable for β ratio values between 0.1 and 0.8, and operating pipe Reynolds numbers greater than 1 000.

Individual meter tube with nominal pipe diameter of less than 12 mm (½ in.) must be flow calibrated.

7.2 Discharge Coefficient for Flange Taps

For small bore orifice flowmeters with flange taps and nominal pipe diameters of 25 mm to 40 mm (1 in. to 1½ in.), the discharge coefficient equation is as follows:

$$C = [\,0.5980 + 0.468(\beta^4 + 10\beta^{12})\,]\sqrt{1-\beta^4} + (0.87 + 8.1\beta^4)\sqrt{\frac{1-\beta^4}{R_D}} \quad (7\text{-}2)$$

where

D = inside diameter of the meter tube, in.
R_D = pipe Reynolds number
β = orifice diameter/pipe diameter

The above equation is applicable for β ratio values between $0.15 \le \beta \le 0.7$ and the operating pipe Reynolds numbers greater than 1 000.

For nominal pipe sizes below 25 mm (1 in.) the meter tubes must be flow calibrated.

7.3 Expansion Factor or Expansibility

For the two tap arrangements, the empirical formulas for computing the expansion factors are as follows:

SI Units

$$\epsilon_1 = 1 - \frac{(0.41 + 0.35\beta^4)\Delta p}{\kappa p_{f1}} \quad (7\text{-}3a)$$

Customary Units

$$Y_1 = 1 - \frac{(0.41 + 0.35\beta^4)h_w}{27.73\kappa p_{f1}} \quad (7\text{-}3b)$$

where subscript 1 indicates upstream, 2 indicates downstream, and f indicates the flowing condition.

SI Units

$$\epsilon_2 = \sqrt{1 + \frac{\Delta p}{p_{f2}}} - \frac{(0.41 + 0.35\beta^4)\Delta p}{\kappa p_2 \sqrt{1 + \frac{\Delta p}{p_{f2}}}} \quad (7\text{-}4a)$$

Customary Units

$$Y_2 = \sqrt{1 + \frac{h_w}{27.73 p_{f2}}} - \frac{(0.41 + 0.35\beta^4)h_w}{27.73\kappa p_{f2}\sqrt{1 + \frac{h_w}{27.73\, p_{f2}}}} \quad (7\text{-}4b)$$

The above formula is applicable only within the range of the limits of use given in paras. 7.1 and 7.2. Test results for the determination of ϵ (Y) are known for air, steam, and natural gas only. However, there is no known objection to using the formula under expansion factor as defined in para. 6.2.3 for other gases and vapors for which the isentropic exponent is known, or can be calculated. However, Eqs. (3-8) through (3-10) are applicable only if $p_2/p_1 \ge 0.8$.

8 UNCERTAINTIES

8.1 Discharge Coefficients

The pipe diameter limits in this Section are nominal pipe diameters.

Copyright ASME International
Provided by IHS under license with ASME
No reproduction or networking permitted without license from IHS
Not for Resale

8.1.1 Equation (7-1), which is applicable to corner tap configurations, has been found to give coefficients within ±0.75% of the values obtained from a calibration when pressures are measured from corner taps as described above, and when 12 mm ($\frac{1}{2}$ in.) ≤ D ≤ 40 mm ($1\frac{1}{2}$ in.), 0.1 ≤ β ≤ 0.8, and R_D > 1 000.

8.1.2 Equation (7-2), which is applicable to flange tap configuration, has been found to give coefficients within ±0.75% of the values obtained from a calibration when pressures are measured from flange taps for limits of 25 mm (1 in.) ≤ D ≤ 40 mm ($1\frac{1}{2}$ in.), 0.15 ≤ β ≤ 0.7 and R_D > 1 000.

8.1.3 The discharge coefficient uncertainty for conditions outside the limits stated in paras. 8.1.1 and 8.1.2 should be determined by actual flow calibration of the flow meter or provided by the flowmeter manufacturer.

8.1.4 The discharge coefficient uncertainties given in paras. 8.1.1 and 8.1.2 may be improved by flow calibration of the flowmeter.

8.2 Expansion Coefficient

When β, $\Delta\rho/p$ (h_w/p), and κ are assumed to be known without error, the percentage uncertainty of the value of ϵ (Y) is as follows:

SI Units

$$\pm 4\,\frac{\Delta p}{p_{f1}}\,\% \tag{8-1a}$$

Customary Units

$$\pm 0.144\,\frac{h_w}{p_{f1}}\,\% \tag{8-1b}$$

The uncertainty of the expansion coefficient for compressible fluids using small bore integral orifice fittings may vary with design differences between manufacturers. Users of these meters should contact the manufacturer for relevant data for their fluid at the operating condition.

8.3 Flow Rate Measurement Uncertainty

Refer to ASME MFC-2M or ISO 5168 for general information on this subject.

8.4 Definition of Uncertainty

8.4.1 For the purpose of this Standard, the uncertainty is defined as a range of values within which the true value of the measurement is estimated to be within 95% probability.

In some cases, the confidence level that can be attached to this range of values will be greater than 95%, but this will be so only where the value of a quantity used in the calculation of flow rate is known with a confidence level better than 95%. In such a case, reference shall be made to ASME MFC-2M or ISO 5168.

8.4.2 The uncertainty for the measurement of the flow rate of a calibrated flowmeter shall be calculated and stated in accordance with ASME MFC-2M or ISO 5168.

8.4.3 The uncertainty can be expressed in absolute or relative terms and the result of the flow measurement can then be given in any of the following forms:

$$\begin{aligned} \textit{rate of flow} &= q + \delta q \\ &= q\,(1 + e_r) \\ &= q \pm 100\,e_r\% \end{aligned}$$

where the uncertainty, δ, shall have the same dimensions as q, while $e_r = \delta q/q$, is nondimensional.

8.5 Practical Computation of Uncertainty

8.5.1 The basic formula for computing the mass rate of flow, from Eqs. (3-11) and (3-12) is:

SI Units

$$q_m = \frac{\pi}{4} C \epsilon_1 d^2 \sqrt{\frac{2\Delta p \rho_{f1}}{1 - \beta^4}} \tag{8-2a}$$

Customary Units

$$q_m = 0.09970190 C Y_1 d^2 \sqrt{\frac{h_w \rho_{f1}}{1 - \beta^4}} \tag{8-2b}$$

In fact, all the variables that appear on the right-hand side of the above equation are not independent. For example, C is a function of d, D, κ, U_1, ν_1; and ϵ (Y) is a function of d, D, Δp (h_w), p_1, κ.

However, it is sufficient to calculate the uncertainties of ϵ (Y), Δp (h_w), and ρ_1 as if independent of each other and also independent of the uncertainties of C and d.

8.5.2 A practical working formula for δq_m may then be derived that takes account of the interdependence of C, d, and D and enters into the calculation as a consequence of the dependence of C on β. Note that C may also be dependent on the pipe diameter D, as well as on the Reynolds number, R_D. However, the deviations of C due to these influences are of a second order and are included in the uncertainty on C.

Similarly, the deviations of ϵ (Y), which result from uncertainties in values of β ratio, pressure ratio, and isentropic exponent are also of a second order and are included in the uncertainty on ϵ (Y).

8.5.3 The uncertainties that shall be included in a practical working formula for δq_m are, therefore, those of the quantities C, ϵ (Y), D, Δp (h_w), and ρ_1.

8.5.4 The practical working formula for the uncertainty of mass rate of flow is based on error propagation analysis of Eq. (8.1), and the resulting sensitivity factors for each parameter as follows:

SI Units

Copyright ASME International
Provided by IHS under license with ASME
No reproduction or networking permitted without license from IHS
Not for Resale

$$e_r = \frac{\delta q_m}{q_m} = \sqrt{\left(\frac{\delta C}{C}\right)^2 + \left(\frac{\delta \epsilon}{\epsilon}\right)^2 + \left(\frac{2\beta^4}{1-\beta^4}\frac{\delta D}{D}\right)^2 + \left(\frac{2}{1-\beta^4}\frac{\delta d}{d}\right)^2 + \left(\frac{\delta \Delta p}{2\Delta p}\right)^2 + \left(\frac{\delta \rho}{\rho}\right)^2} \quad (8\text{-}3a)$$

Customary Units

$$e_r = \frac{\delta q_m}{q_m} = \sqrt{\left(\frac{\delta C}{C}\right)^2 + \left(\frac{\delta Y}{Y}\right)^2 + \left(\frac{2\beta^4}{1-\beta^4}\frac{\delta D}{D}\right)^2 + \left(\frac{2}{1-\beta^4}\frac{\delta d}{d}\right)^2 + \left(\frac{\delta h_w}{2h_w}\right)^2 + \left(\frac{\delta \rho}{\rho}\right)^2} \quad (8\text{-}3b)$$

In Eq. (8-3), some of the uncertainties, like those on the flow and expansion coefficients, are given in paras. 8.1, 8.2, and 8.3, while others must be determined by the user. See paras. 8.5.7 and 8.5.8.

8.5.5 In Eq. (8-3), values of $\delta C/C$ and $\delta\epsilon/\epsilon$ ($\delta Y/Y$) shall be taken from the appropriate sections of this Standard.

8.5.6 When the straight lengths are such that an additional uncertainty of ±0.5% must be included, this additional uncertainty shall be simply added and not quadratically combined with the other uncertainties in the formula given in para. 8.5.4. Other additional uncertainties must be added in the same way.

8.5.7 In Eq. (8-3), the maximum values of $\delta D/D$ and $\delta d/d$, which can be derived from the given specifications can be adopted or alternatively, the smaller actual values can be computed by the user. The maximum values of $\delta D/D$ may be taken as ±0.4% while the maximum value for $\delta d/d$ may be taken as ±0.07%.

8.5.8 The values of $\delta\Delta p/\Delta p$ ($\delta h_w/h_w$) and $\delta\rho_{f1}$ shall be determined by the user because this Standard does not specify in detail the method of measurement of the quantities Δp (h_w) and ρ_{f1}.

9 PRESSURE LOSS, $\Delta\omega$ (h)

The pressure loss, $\Delta\omega$ (h), for the orifice plates described in this Standard is approximately related to the differential pressure Δp (h_w) by the following:

SI Units

$$\Delta\omega = \frac{\sqrt{1-\beta^4} - C\beta^2}{\sqrt{1-\beta^4} + C\beta^2}\Delta p \quad (9\text{-}1a)$$

Customary Units

$$h = \frac{\sqrt{1-\beta^4} - C\beta^2}{\sqrt{1-\beta^4} + C\beta^2} h_w \quad (9\text{-}1b)$$

This pressure loss is the difference in static pressure between a wall pressure measured on the upstream side of the primary element, where the influence of the approach impact pressure adjacent to the plate becomes negligible, approximately 1D upstream of the primary device, and that measured on the downstream side of the device, where the static pressure recovery by expansion of the jet may be considered as just completed, approximately 6D downstream of the primary element. Therefore, the permanent pressure loss can be measured using taps at 1D upstream and 6D downstream of the orifice plate.

Copyright ASME International
Provided by IHS under license with ASME
No reproduction or networking permitted without license from IHS

Not for Resale

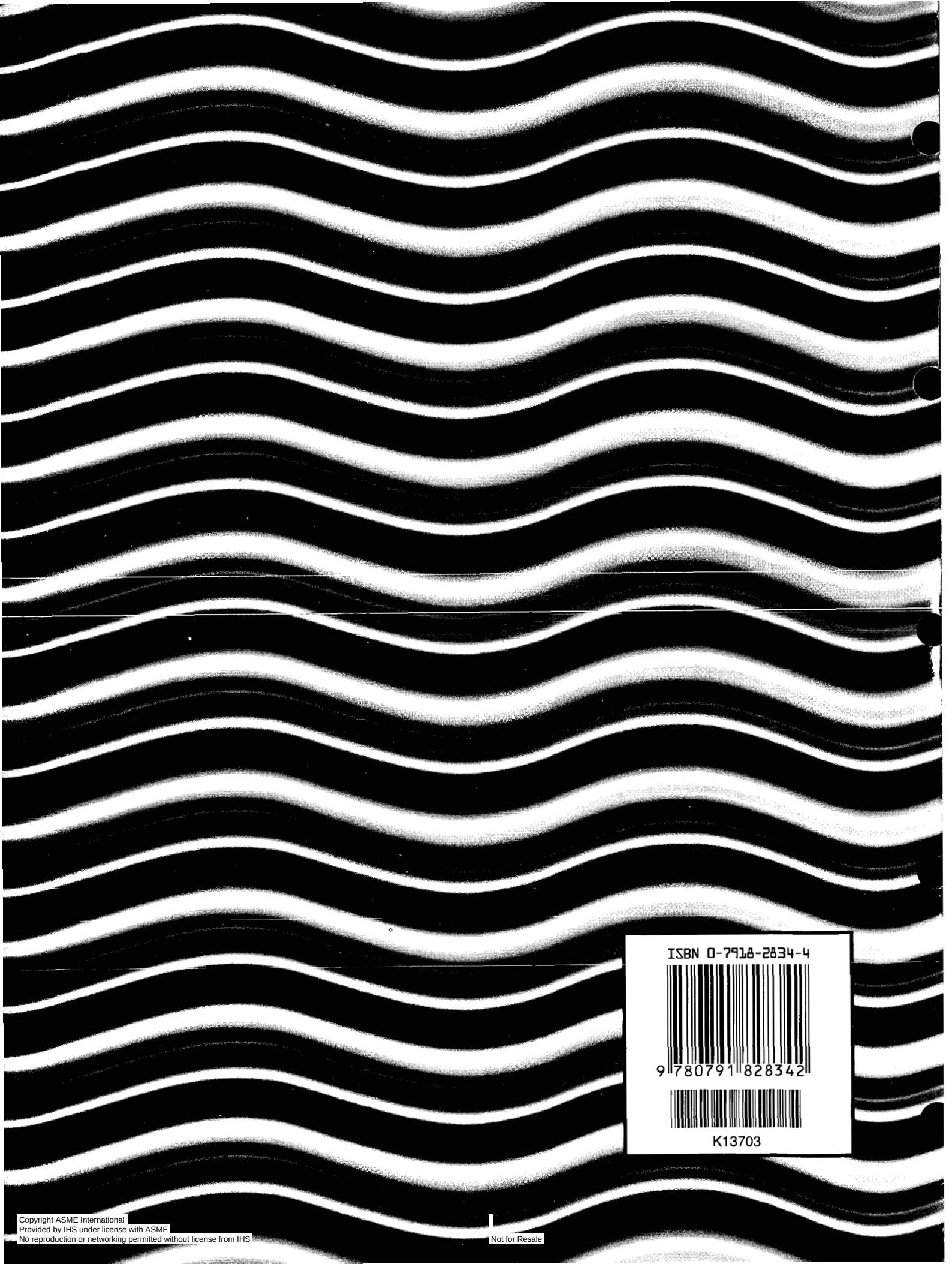

ISBN 0-7918-2834-4

9 780791 828342

K13703

Copyright ASME International
Provided by IHS under license with ASME
No reproduction or networking permitted without license from IHS

Not for Resale