ASME MFC-12M–2006

Measurement of Fluid Flow in Closed Conduits Using Multiport Averaging Pitot Primary Elements

AN AMERICAN NATIONAL STANDARD



The American Society of Mechanical Engineers

Copyright ASME International
Provided by IHS under license with ASME
No reproduction or networking permitted without license from IHS

Not for Resale

ASME MFC-12M–2006

Measurement of Fluid Flow in Closed Conduits Using Multiport Averaging Pitot Primary Elements

AN AMERICAN NATIONAL STANDARD

The American Society of Mechanical Engineers

Three Park Avenue • New York, NY 10016

--`,,```,,,,````-`-`,,`,,`,`,,`---

Copyright ASME International
Provided by IHS under license with ASME
No reproduction or networking permitted without license from IHS

Not for Resale

Date of Issuance: October 9, 2006

This Standard will be revised when the society approves the issuance of a new edition. There will be no addenda issued to this edition.

ASME issues written replies to inquiries concerning interpretations of technical aspects of this Standard. Interpretations are published on the ASME website under the Committee Pages at http://www.asme.org/codes/ as they are issued.

ASME is the registered trademark of The American Society of Mechanical Engineers.

This code or standard was developed under procedures accredited as meeting the criteria for American National Standards. The Standards Committee that approved the code or standard was balanced to assure that individuals from competent and concerned interests have had an opportunity to participate. The proposed code or standard was made available for public review and comment that provides an opportunity for additional public input from industry, academia, regulatory agencies, and the public-at-large.

ASME does not "approve," "rate," or "endorse" any item, construction, proprietary device, or activity.

ASME does not take any position with respect to the validity of any patent rights asserted in connection with any items mentioned in this document, and does not undertake to insure anyone utilizing a standard against liability for infringement of any applicable letters patent, nor assume any such liability. Users of a code or standard are expressly advised that determination of the validity of any such patent rights, and the risk of infringement of such rights, is entirely their own responsibility.

Participation by federal agency representative(s) or person(s) affiliated with industry is not to be interpreted as government or industry endorsement of this code or standard.

ASME accepts responsibility for only those interpretations of this document issued in accordance with the established ASME procedures and policies, which precludes the issuance of interpretations by individuals.

No part of this document may be reproduced in any form,
in an electronic retrieval system or otherwise,
without the prior written permission of the publisher.

The American Society of Mechanical Engineers
Three Park Avenue, New York, NY 10016-5990

Copyright © 2006 by
THE AMERICAN SOCIETY OF MECHANICAL ENGINEERS
All rights reserved
Printed in U.S.A.

Copyright ASME International
Provided by IHS under license with ASME
No reproduction or networking permitted without license from IHS

Not for Resale

CONTENTS

Foreword iv
Committee Roster v
Correspondence With the MFC Committee vi

1 Scope 1

2 Terms and Definitions 1

3 References 2

4 Operating Principles 3

5 Flow Equations 5

6 Unit Construction Considerations 5

7 Installation Effects 6

8 Operation 7

9 Flow Coefficient 7

10 Flow Rate Measurement Uncertainty 7

Figures

1 APT Showing Total and Reference Pressure Sensed on the Strut 4
2 APT Showing Total Pressure Sensed on the Strut and Reference Pressure Sensed at the Pipe Wall 4

Tables

1 Symbols 2

Nonmandatory Appendices

A Typical Cross Sections of Multiport Averaging Pitot Primary Elements 9
B Multiport Averaging Pitot Primary Element Flow Theory 10

Copyright ASME International
Provided by IHS under license with ASME
No reproduction or networking permitted without license from IHS
Not for Resale

FOREWORD

Multiport averaging pitot primary elements cover a family of head-class devices that make use of the Bernoulli principal to measure the flow of liquids and gases. This Standard tries to clarify differences between the construction and operation of these devices and other head-class devices, such as orifice meters, Venturi meters, and nozzles.

Due to differences in the design of multiport averaging pitot primary elements, this Standard cannot address detailed performance characteristics in specific applications. It does cover issues that are common to such devices.

Suggestions for improvements to this Standard are encouraged and should be sent to: Secretary, ASME MFC Committee, the American Society of Mechanical Engineers, Three Park Avenue, New York, NY 10016-5990.

ASME MFC-12M–2006 was approved by the American National Standard Institute on March 21, 2006.

Copyright ASME International
Provided by IHS under license with ASME
No reproduction or networking permitted without license from IHS
Not for Resale

ASME MFC COMMITTEE
Measurement of Fluid Flow in Closed Conduits

(The following is the roster of the Committee at the time of approval of this Standard.)

STANDARDS COMMITTEE OFFICERS

Z. D. Husain, *Chair*
R. J. DeBoom, *Vice Chair*
A. L. Guzman, *Secretary*

STANDARDS COMMITTEE PERSONNEL

C. J. Blechinger, *Member Emeritus,* Consultant
R. M. Bough, Rolls-Royce
G. P. Corpron, Consultant
R. J. DeBoom, Consultant
D. Faber, *Corresponding Member,* Badger Meter, Inc.
R. H. Fritz, *Corresponding Member,* Lonestar Measurement & Controls
F. D. Goodson, Emerson Process
A. L. Guzman, The American Society of Mechanical Engineers
Z. D. Husain, Chevron Corp.
E. H. Jones Jr., *Alternate,* Chevron Petroleum Technologies
C. G. Langford, Consultant
W. M. Mattar, Invensys/Foxboro Co.
G. E. Mattingly, Consultant
D. R. Mesnard, Consultant
R. W. Miller, *Member Emeritus,* R. W. Miller & Associates, Inc.
A. M. Quraishi, American Gas Association
B. K. Rao, Consultant
W. F. Seidl, Colorado Engineering Experiment Station, Inc.
T. M. Kegel, *Alternate,* Colorado Engineering Experiment Station, Inc.
D. W. Spitzer, Spitzer and Boyes, LLC
R. N. Steven, Colorado Engineering Experiment Station, Inc.
D. H. Strobel, *Member Emeritus,* Consultant
J. H. Vignos, *Member Emeritus,* Consultant
D. E. Wiklund, Rosemount, Inc.
D. C. Wyatt, Wyatt Engineering

SUBCOMMITTEE 12 — MULTIPORT AVERAGING PITOT PRIMARY DEVICES

D. E. Wiklund, *Chair,* Rosemount, Inc.
G. P. Corpron, Consultant
R. J. DeBoom, Consultant
R. Evans, Dieterich Standard, Inc.
Z. D. Husain, Chevron Corp.
W. M. Mattar, Invensys/Foxboro Co.
D. R. Mesnard, Consultant
S. H. Taha, *Corresponding Member,* Experflow Measurements, Inc.
D. C. Wyatt, Wyatt Engineering

Copyright ASME International
Provided by IHS under license with ASME
No reproduction or networking permitted without license from IHS
Not for Resale

CORRESPONDENCE WITH THE MFC COMMITTEE

General. ASME Standards are developed and maintained with the intent to represent the consensus of concerned interests. As such, users of this Standard may interact with the Committee by requesting interpretations, proposing revisions, and attending committee meetings. Correspondence should be addressed to:

Secretary, MFC Standards Committee
The American Society of Mechanical Engineers
Three Park Avenue
New York, NY 10016-5990

Proposing Revisions. Revisions are made periodically to the Standard to incorporate changes that appear necessary or desirable, as demonstrated by the experience gained from the application of the Standard. Approved revisions will be published periodically.

The Committee welcomes proposals for revisions to this Standard. Such proposals should be as specific as possible, citing the paragraph number(s), the proposed wording, and a detailed description of the reasons for the proposal, including any pertinent documentation.

Interpretations. Upon request, the MFC Committee will render an interpretation of any requirement of the Standard. Interpretations can only be rendered in response to a written request sent to the Secretary of the MFC Standards Committee.

The request for interpretation should be clear and unambiguous. It is further recommended that the inquirer submit his/her request in the following format:

Subject:	Cite the applicable paragraph number(s) and the topic of the inquiry.
Edition:	Cite the applicable edition of the Standard for which the interpretation is being requested.
Question:	Phrase the question as a request for an interpretation of a specific requirement suitable for general understanding and use, not as a request for an approval of a proprietary design or situation. The inquirer may also include any plans or drawings that are necessary to explain the question; however, they should not contain proprietary names or information.

Requests that are not in this format will be rewritten in this format by the Committee prior to being answered, which may inadvertently change the intent of the original request.

ASME procedures provide for reconsideration of any interpretation when or if additional information that might affect an interpretation is available. Further, persons aggrieved by an interpretation may appeal to the cognizant ASME Committee or Subcommittee. ASME does not "approve," "certify," "rate," or "endorse" any item, construction, proprietary device, or activity.

Attending Committee Meetings. The MFC Committee regularly holds meetings, which are open to the public. Persons wishing to attend any meeting should contact the Secretary of the MFC Standards Committee.

--`,,```,,,,````-`-`,,`,,`,`,,`---

Copyright ASME International
Provided by IHS under license with ASME
No reproduction or networking permitted without license from IHS

Not for Resale

MEASUREMENT OF FLUID FLOW IN CLOSED CONDUITS USING MULTIPORT AVERAGING PITOT PRIMARY ELEMENTS

1 SCOPE

This Standard, provides information on the use of multiport averaging Pitot head-type devices used to measure liquids and gases. The Standard applies when the conduits are full and the flow

(a) has a fully developed profile

(b) remains subsonic throughout the measurement section

(c) is steady or varies only slowly with time

(d) is considered single-phase

A differential pressure transmitter or other pressure measuring device, known as a secondary element, must be used with a multiport averaging Pitot primary element to produce a flow rate measurement.

Although multiport averaging Pitot primary elements are sometimes used in noncircular conduits, such applications are beyond the scope of this Standard.

2 TERMS AND DEFINITIONS

The terminology and symbols (Table 1) used in this Standard are in accordance with ASME MFC-1M. Some items from ASME MFC-1M are listed in para. 2.2.1 for easier reference.

Terminology not defined in ASME MFC-1M, but used in this Standard, are defined in para. 2.2.2.

2.1 Symbols

See Table 1.

2.2 Definitions

2.2.1 Definitions Found in ASME MFC-1M

cavitation: the implosion of vapor bubbles formed after flashing when the local pressure rises above the vapor pressure of the liquid. See also *flashing.*

differential pressure device: device inserted in a pipe to create a pressure differential whose measurement, together with a knowledge of the fluid conditions and of the geometry of the device and the pipe, enables the flow rate to be calculated.

flashing: the formation of vapor bubbles in a liquid when the local pressure falls to or below the vapor pressure of the liquid, often due to local lowering of pressure because of an increase in the liquid velocity. See also *cavitation.*

primary device (of a differential pressure device): differential pressure device with its pressure tappings.

rangeability: flowmeter rangeability is the ratio of the maximum to minimum flowrates or Reynolds number in the range over which the primary element meets a specified uncertainty (accuracy).

reproducibility: the closeness of agreement between results obtained when the conditions of measurement differ; for example, with respect to different test apparatus, operators, facilities, time intervals, etc.

Reynolds number: a dimensionless parameter expressing the ratio between inertia and viscous forces. It is given by the formula

$$Re = \frac{Vl}{v} \tag{1}$$

where

V = average spatial fluid velocity
l = characteristic dimension of the system in which the flow occurs
v = kinematic viscosity of the fluid

NOTE: When specifying a Reynolds number, one should indicate the characteristic dimension on which it has been based (e.g., diameter of the pipe or width of the multiport averaging Pitot primary element).

total pressure (or total head): also known as stagnation pressure; sum of the static pressure and the dynamic pressure. It characterizes the state of the fluid when its kinetic energy is completely transformed into potential energy.

2.2.2 Definitions for MFC-12M

APT or averaging Pitot tube: common abbreviation for multiport averaging Pitot primary element.

--`,,```,,,,````-`-`,,`,,`,`,,`---

Copyright ASME International
Provided by IHS under license with ASME
No reproduction or networking permitted without license from IHS

Not for Resale

Table 1 Symbols

Symbol	Quantity	Dimensions [Note (1)]	SI Units
D	Diameter of the conduit [Note (2)]	L	m
g	Local acceleration of gravity [Note (2)]	LT^{-2}	m/s^2
P	Absolute pressure [Note (2)]	$ML^{-1}T^{-2}$	Pa
Δp	Differential pressure [Note (2)]	$ML^{-1}T^{-2}$	Pa
q_m	Mass flow rate [Note (2)]	MT^{-1}	kg/s
q_v	Volume flow rate [Note (2)]	L^3T^{-1}	m^3/s
Re	Reynolds number [Note (2)]	...	...
T	Absolute temperature [Note (2)]	θ	K
U	Mean axial velocity [Note (2)]	LT^{-1}	m/s
ε	Expansibility [Note (2)]	...	...
ρ	Density [Note (2)]	ML^{-3}	kg/m^3
A	Area of conduit at measurement conditions [Note (3)]	L^2	m^2
K	Flow coefficient [Note (3)]	...	...
P_g	Gage pressure [Note (3)]	$ML^{-1}T^{-2}$	Pa
P_t	Total pressure [Note (3)]	$ML^{-1}T^{-2}$	Pa
P_s	Local static pressure [Note (3)]	$ML^{-1}T^{-2}$	Pa
z	Vertical elevation [Note (3)]	L	m
q_b	Volume flow at base conditions [Notes (3) and (4)]	L^3T^{-1}	m^3/s
μ	Absolute viscosity [Note (3)]	$ML^{-1}T^{-1}$	Pa·s

NOTES:
(1) Dimensions: M = mass, θ = temperature, L = length, T = time.
(2) Symbols identical to ASME MFC-1M.
(3) Symbols defined specifically for this Standard, ASME MFC-12M.
(4) Subscript b is for base conditions.

expansibility (expansion factor) ε: dimensionless coefficient given by the formula

$$\varepsilon = \frac{q_m}{\frac{\pi}{4} KD^2 \sqrt{2\Delta p \rho_f}} \quad (2)$$

where K is the flow coefficient of the APT and D is the pipe diameter.

NOTES:
(1) This definition is similar to that given in MFC-1M. It has been modified to make it apply for APT applications.
(2) Subscript f is for flowing conditions.

in-situ: the primary element is installed in the actual configuration and under actual flowing conditions in the conduit where it is to be used.

linearity: linearity refers to the constancy of the flow coefficient, K, over a range of Reynolds numbers or flow rates. This value is usually specified by maximum and minimum values of K defined over the range. The upper and lower limits of this range can be specified by the manufacturer as either a maximum and minimum Reynolds number range, flow rate range of a specified fluid, or other meter design limitations such as pressure, temperature, or installation effects.

NOTE: This definition is similar to that given in MFC-1M. It has been modified to make it apply for APT applications.

secondary device: a device that receives a signal from the primary device and displays, records, and/or transmits it as a measure of the flow rate.

velocity profiles: distribution of axial vectors of the local fluid velocities over a cross-section of a conduit.

3 REFERENCES

Unless otherwise noted all references are to the latest published edition of these standards. The following is a list of publications referenced in this Standard.

ASME MFC-1M, Glossary of Terms Used in the Measurement of Fluid Flow in Pipes
ASME MFC-2M, Measurement Uncertainty for Fluid Flow in Closed Conduits
ASME MFC-7M, Measurement of Gas Flow by Means of Critical Flow Venturi Nozzles

Copyright ASME International
Provided by IHS under license with ASME
No reproduction or networking permitted without license from IHS Not for Resale

ASME MFC-8M, Connections for Pressure Signal Transmissions Between Primary and Secondary Devices

ASME MFC-9M, Measurement of Liquid Flow in Closed Conduits by Weighing Method

ASME MFC-10M, Method for Establishing Installation Effects on Flowmeters

Publisher: The American Society of Mechanical Engineers (ASME), Three Park Avenue, New York, NY 10016-5990; Order Department: 22 Law Drive, P.O. Box 2300, Fairfield, NJ 07007-2300

ISO 4185, Measurement of Liquid Flow in Closed Conduits — Weighing Method

ISO 5168, Measurement of Fluid Flow — Evaluation of Uncertainties

ISO 8316, Measurement of Liquid Flow in Closed Conduits — Method by Collection of the Liquid in a Volumetric Tank

Publisher: International Organization for Standardization (ISO), 1 rue de Varembé, Case Postale 56, CH-1211, Genève 20, Switzerland/Suisse

4 OPERATING PRINCIPLES

4.1 Description of Operation

The multiport averaging Pitot primary flow element or averaging Pitot tube (APT) is similar to the conventional single point Pitot tube in operation, but differs in construction. It is typically designed as a strut, or cylinder (the cross section of the cylinder is not necessarily circular), that is inserted across the circular pipe or conduit on a diameter. Some APT designs have more than one strut to achieve a more representative sample of the fluid velocity in the pipe or conduit (see Nonmandatory Appendix A). The strut has ports that sense the total velocity head (total pressure), and a reference, or low pressure. In some APT designs the reference pressure is measured at the pipe wall. Figures 1 and 2 show two commonly used methods for sensing the total pressure and reference pressure. The sensed pressure(s) are conveyed through isolated passages, or chambers in the cylinder to the exterior of the assembly, where there are connections to the secondary device. By combining the individually sensed pressures from its sensing ports, the APT produces a differential pressure that can be related to the average fluid velocity in the pipe or conduit.

4.2 Bernoulli's Equation

As with other differential pressure-based flow primary elements, the underlying principle for the APT sensor is the application of the momentum equation from basic fluid theory. Using the assumptions for steady state, inviscid, and incompressible flow along a streamline, the equation reduces to the Bernoulli equation (see Nonmandatory Appendix B)

$$P_s + \frac{\rho U^2}{2} + \rho g z = P_t \tag{3}$$

where

g = local acceleration of gravity
P_s = fluid static pressure
P_t = fluid total pressure
U = fluid velocity
z = vertical distance from a datum reference to the point of measurement
ρ = fluid density

For a horizontal pipe, the vertical distance for the two points of measurement are the same, and $\rho g z$ is dropped from eq. (3). If a standard Pitot tube is inserted into the flow stream, the flowing fluid will come to rest, or stagnate, isentropically at the Pitot tip. The pressure at this point will be equal to the sum of the fluid static pressure and the dynamic head, also called the total head or total pressure. If the static pressure at the Pitot tube is known, or measured, the velocity can be calculated from

$$P_t = P_s + \frac{\rho U^2}{2} \tag{4}$$

or

$$U = \sqrt{\frac{2\,(P_t - P_s)}{\rho}} \tag{5}$$

where

P_s = local static pressure
P_t = total pressure
U = fluid velocity sensed at the Pitot's tip

4.3 Total Pressure

The multiport averaging Pitot primary element measures the total pressure by stagnating, or bringing to rest, the fluid at the upstream surface of the element. The total (or stagnation) pressure is then sensed at ports that are fabricated in the upstream surface of the element. The location, size, and shape of the sensing ports may differ by manufacturer and correspond to the selected method of sampling, or averaging of the fluid velocity profile. Provided the flow is steady and is not highly distorted (e.g., swirling flow or skewed velocity profile), the total pressure, measured at the high pressure tap, will represent the average of the individual pressure samples. The measured total pressure is related to the measured velocity through the operating equation. The signal generated at the sensor's high pressure tap is representative of the sampled total pressures, not an average of the sampled velocities. The ability of the system to provide a true average for various velocity distributions will depend on the method for locating the sensing holes (see Nonmandatory Appendix B).

--`,,```,,,,````-`-`,,`,,`,`,,`---

Copyright ASME International
Provided by IHS under license with ASME
No reproduction or networking permitted without license from IHS

Not for Resale

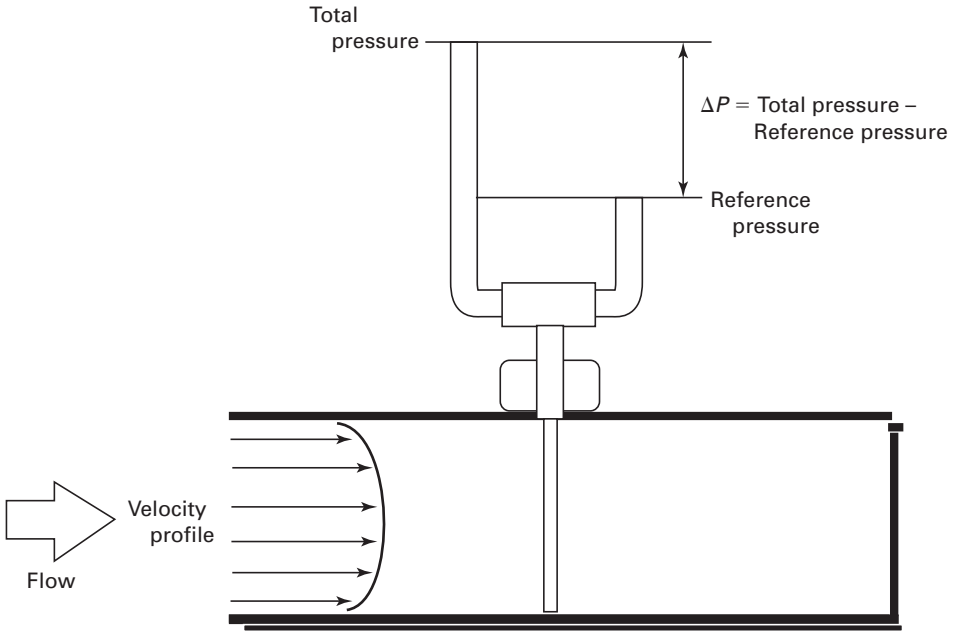

Fig. 1 APT Showing Total and Reference Pressure Sensed on the Strut

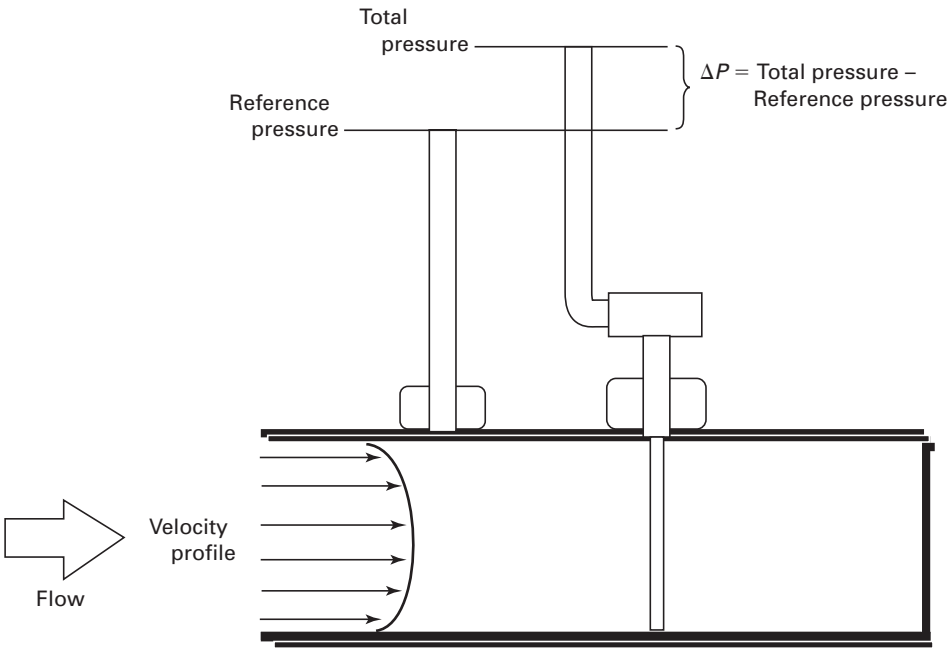

Fig. 2 APT Showing Total Pressure Sensed on the Strut and Reference Pressure Sensed at the Pipe Wall

Copyright ASME International
Provided by IHS under license with ASME
No reproduction or networking permitted without license from IHS
Not for Resale

4.4 Reference Pressure

In order to provide the dynamic head, also called the dynamic pressure or the differential pressure, a reference pressure must be subtracted from the total pressure measured at the upstream surface of the averaging Pitot primary element. Some designs measure the pipe or conduit static pressure using a separate arrangement of taps, tubes, or probes. Others incorporate the measurement of a low pressure (lower than the pipe or conduit static pressure) into the strut or cylinder design. The location of the reference pressure sensing ports varies with manufacturer as shown in Nonmandatory Appendix A. Sensing port location is a key factor in determining the level of the reference pressure. Therefore, it has implications for overall strength of the differential pressure signal from the APT primary element at a given flow rate.

The APT design for measurement of reference pressure can also affect the device performance over the intended application range. Since APT designs vary between manufacturers, the specific design used should be reviewed for the intended range of operation.

4.5 Flow Rate Calculation

The APT primary element produces a signal proportional to the average fluid velocity along the diameter which it traverses. Provided the location of the APT cylinder(s) is appropriate for the local velocity field, the flow rate in actual volume units per time is calculated by multiplying this value by the conduit cross-sectional area. For a circular conduit

$$q_v = UA$$

where

$$A = \frac{\pi D^2}{4} \tag{6}$$

For APTs, the pipe or conduit area is a critical component of the calculated flow rate and must be known to a degree of uncertainty required to give the needed flow rate uncertainty (see section 10).

5 FLOW EQUATIONS

The working flow rate equations (see Nonmandatory Appendix B) at flowing conditions are

$$q_m = \frac{\pi}{4} K \varepsilon D^2 \sqrt{2 \Delta P \rho_f} \tag{7}$$

and

$$q_v = \frac{q_m}{\rho_f} \tag{8}$$

and

$$q_b = \frac{q_m}{\rho_b} \tag{9}$$

The equations developed in Nonmandatory Appendix B and used in this section are for fluid flow in a horizontal pipe. Multiport averaging Pitot primary elements can be used in horizontal and vertical installations. In vertical installations the pressure head difference is zeroed out during installation and startup.

For incompressible fluids the expansibility (expansion factor), ε, has a value of 1.0.

The value of the flow coefficient, K, or an expression for its computation for a given APT primary element design is specified by the manufacturer.

6 UNIT CONSTRUCTION CONSIDERATIONS

The construction of an APT primary element must be suitable in design and material to operate under the conditions to which the meter will be exposed, including temperature, pressure, flow rate, and corrosion. It is the responsibility of the manufacturer to clearly identify to the user the safe limits of pressure, temperature, and flow rate. The user should define the operating and maximum pressure, temperature, and flow rate ranges, as well as the flowing fluid and environmental constraints.

6.1 Sensor Construction

Since the primary element is installed within the fluid stream, it must be designed to withstand the loads imposed due to piping pressure and the dynamics of the flow stream. Some of the multiport averaging Pitot type primary elements that are commercially available are shown in Nonmandatory Appendix A. The compatibility of an application or process condition for a particular primary element design should be determined individually.

6.2 Pressure Containment Elements

In all systems, a portion of the device is exposed to the system pressure. The components shall be designed and/or specified in accordance with applicable standards. The pressure containment portion of the APT primary flow element, regardless of design, shall be leak free in its construction.

6.3 Mounting Methods and Hardware

A wide variety of mounting techniques and hardware are used depending on the design of the unit. Mounting hardware must be constructed so that all elements or components of the unit are constrained by proper design. This is particularly true in hot/wet tap units where there is a provision for insertion or removal of the sensor from the system under pressure. For safety reasons, the

Copyright ASME International
Provided by IHS under license with ASME
No reproduction or networking permitted without license from IHS

Not for Resale

manufacturer must supply pressure and temperature limits for each mounting configuration.

6.4 Hot Taps

When considering hot/wet tap elements, the manufacturer shall perform the structural calculations and provide flow rates or signal limits for the following two conditions:

(a) when the sensor is not in contact with the opposite side of the pipe

(b) when the sensor is not in contact with the opposite side of the pipe, while being inserted or retracted from the closed conduit

6.5 Materials

In addition to the requirement that the materials of construction are compatible with the system process fluid, they must be compatible with the method of construction. When dissimilar metals are used, selection should be such that galvanic corrosion is not induced to the extent that the performance and life of the device is impaired. Selection of the materials of construction must also consider atmospheric corrosion when hostile atmospheres are present.

6.6 Structural Consideration

The system must provide structural integrity with respect to pressure, temperature, induced bending due to fluid drag, expansion due to thermal effects, and any other impressed loads. In addition, fluid mechanical forces caused by the fluid flowing past the sensing element may cause the sensor to vibrate. This vibration can affect the performance of the meter and could result in fatigue failure of the sensor. Consult the manufacturer for appropriate flow rate or signal limits for the specified sensor size, design, and pipe size.

7 INSTALLATION EFFECTS

The primary element performance can be affected by installation and velocity profile. Deviations in the velocity profile can be caused by in-line equipment, the piping configuration, and disturbances upstream and downstream of the primary element.

The manufacturer's performance specifications should include a statement of the reference conditions under which the flow coefficient and uncertainties were determined.

APTs can be used to measure flow rate for gas or liquid in horizontal and vertical installations. In liquid flow applications the flow direction should be upwards to help ensure a full pipe for flow measurement. The pressure head difference, in vertical flows, should be zeroed out with the secondary during installation and startup.

7.1 Velocity Profile

Manufacturers define the performance of their APT for reference profile conditions with specific upstream and downstream lengths of straight pipe. These lengths are chosen to ensure the performance of the APT. Under nonreference conditions, upstream velocity profiles may affect the velocity profile at the flow measurement point and influence the performance. The manufacturer should be consulted for the sensitivity of the APT to nonreference flow conditions. In some cases, the use of a flow conditioner may restore the velocity profile to the reference profile.

7.2 Upstream and Downstream Pipe Length Requirements

The minimum upstream and downstream straight lengths of pipe required to meet the performance specification of the APT should be stated by the manufacturer. The minimum lengths required downstream of different pipe fittings may vary for each APT and piping configuration.

When the flow measurement application or installation configuration does not match one of the manufacturer's listed applications and installations, the flowmeter manufacturer should be consulted. If the manufacturer cannot provide sufficient guidance, in-situ calibration may be considered.

In-situ calibration establishes the flow coefficient of the APT and uncertainty under actual operating conditions. If in-situ calibration is performed, the calibration should be done in accordance with acceptable standards as listed in section 3. If in-situ calibration is not possible, the effect of installation can be reduced by performing a flow laboratory calibration of the meter replicating the actual upstream and downstream piping installations.

7.3 Alignment and Orientation

7.3.1 Alignment. The manufacturer shall specify the limits of the allowable angular tolerances for the installation of the APT. Deviation of the APT primary element in any angular alignment from the allowable limits can result in erroneous flow measurement.

7.3.2 Orientation. Manufacturers shall specify preferred APT locations and orientations with respect to the horizontal or vertical axis of the flow conduit. These preferred orientations may depend on the fluid being measured.

7.4 Conduit Internal Surface Condition

Surface roughness of the flow conduit can affect the velocity distribution at the metering location. The manufacturer should advise the user on the effects of internal pipe surfaces. In some cases, buildup of mineral or other deposits on the internal wall of the conduit may alter the velocity distribution or obscure the APT sensing ports. The installer should determine the condition of

Copyright ASME International
Provided by IHS under license with ASME
No reproduction or networking permitted without license from IHS
Not for Resale

the internal conduit wall while assessing the APT location.

7.5 Conduit Wall Mount Opening

Recesses, protrusions, and cavities in the conduit, especially near the APT, can affect the velocity profile and the performance of the APT. Manufacturers should specify the tolerance limits of the hole size and connectors required for the APT installation.

8 OPERATION

(a) The APT should be operated within the manufacturer's recommended operating range. Considerations for successful operation include, but are not limited to, the following items:

(1) proper sizing
(2) proper installation
(3) new installation startup procedure
(4) operation procedure including startup and shutdown process

(b) Abnormal operating conditions that should be avoided include, but are not limited to, the following items:

(1) excessive vibration
(2) entrained gas in liquid applications
(3) suspended solids
(4) condensing vapors in gas applications
(5) cavitation
(6) flashing
(7) flow pulsations
(8) excessive flow

9 FLOW COEFFICIENT

The flow coefficient for the APT primary element combines sensor design effects with geometric effects, such as sensor and piping geometry. The geometric relationship is determined by the manufacturer for each type and size of flow sensor.

9.1 Factors Affecting the Flow Coefficient

The flow coefficient, K, for a given APT primary element may be affected by anything that alters the flow profile at the installation location. In operation, the flow measurement may be affected by a number of factors, such as the following:

(a) Reynolds number
(b) inside pipe dimensions
(c) internal surface roughness
(d) flow profile distortions
(e) rapid accelerations and decelerations of the flow
(f) vibration
(g) dimensional tolerances of the APT
(h) alignment and orientation of the APT

To ensure accurate operation of the APT under installed conditions, the factors affecting the flow coefficient must be either the same as those achieved during calibration or be quantified so that a corrected flow coefficient can be calculated. Factors like the Reynolds number and the conduit size and its condition are normally quantified. Different types of fluids can be used to achieve hydrodynamically similar flows when correlated by the Reynolds number.

9.2 Determination of the Flow Coefficient

9.2.1 Direct Method. Direct experimental determination of the flow coefficient for each APT can be performed. In this method, laboratory calibrations are used to establish the flow coefficient.

9.2.2 Indirect Method. Most manufacturers determine the flow coefficient by performing a limited number of calibrations on sampled APTs. Statistical methods are used to predict the flow coefficient and its uncertainty for other similar APTs and untested pipe sizes.

9.3 Flow Coefficient Uncertainty

Manufacturers should state the uncertainty of the flow coefficient, which should be substantiated by calibration data. The uncertainty statement for the experimental calibration should be made in accordance with ASME MFC-2M and include any appropriate ranges or limitations of operation, such as fluid types, velocities, or Reynolds numbers.

10 FLOW RATE MEASUREMENT UNCERTAINTY

10.1 Definition of Uncertainty

The uncertainty of any quantity is an estimate of the interval bounding the measured value within which the true value lies. The confidence level, or confidence interval, is the degree of confidence that the true value lies within the stated uncertainty. It is typically expressed as a percent. Both an uncertainty and a confidence interval are required to specify uncertainty. For example, the flow rate may be specified as 100 SCFH with an uncertainty of ±1.0% at a 95% confidence interval. This means that 95 out of every 100 readings will fall within 99 SCFH and 101 SCFH.

10.1.1 The uncertainty for the measurement of the flow rate shall be calculated and stated in accordance with ASME MFC-2M or ISO 5168.

10.1.2 The uncertainty can be expressed in absolute or relative terms in any of the following forms:

$$\begin{aligned} \text{Flow rate} &= q + \delta q \\ &= q\,(1 + e_r) \\ &= q \pm 100 e_r\% \end{aligned}$$

where the uncertainty, δ, shall have the same dimensions as q, and $e_r = \delta q/q$ is dimensionless.

Copyright ASME International
Provided by IHS under license with ASME
No reproduction or networking permitted without license from IHS
Not for Resale

10.2 Computation of Flow Uncertainty

The relationship for calculating mass flow rate is given as [see also eq. (7)]

$$q_m = \frac{\pi}{4} K\varepsilon D^2 \sqrt{2\Delta P \rho_f} \tag{10}$$

Even though some of the terms on the right-hand side of this equation may be dependent on other terms, it is a generally accepted method of estimating overall uncertainty to assume the terms are independent of each other.

These determinations should be done in accordance with the expected usage pattern of the device (i.e., quantifying the appropriate reproducibility of pertinent quantities).

10.2.1 A practical working formula for calculation of flow rate uncertainty is given by

$$\frac{\delta q_m}{q_m} = \sqrt{\left(\frac{\delta K}{K}\right)^2 + \left(\frac{\delta \varepsilon}{\varepsilon}\right)^2 + \left(\frac{2\delta D}{D}\right)^2 + \left(\frac{\delta \Delta p}{2\Delta p}\right)^2 + \left(\frac{\delta \rho}{2\rho}\right)^2} \tag{11}$$

In this expression some of the individual uncertainties must be supplied by the manufacturer (e.g., flow coefficient and expansibility factor uncertainties) and others must be determined by the user (e.g., pipe diameter and fluid density uncertainties).

Copyright ASME International
Provided by IHS under license with ASME
No reproduction or networking permitted without license from IHS

Not for Resale

NONMANDATORY APPENDIX A
TYPICAL CROSS SECTIONS OF MULTIPORT AVERAGING PITOT PRIMARY ELEMENTS

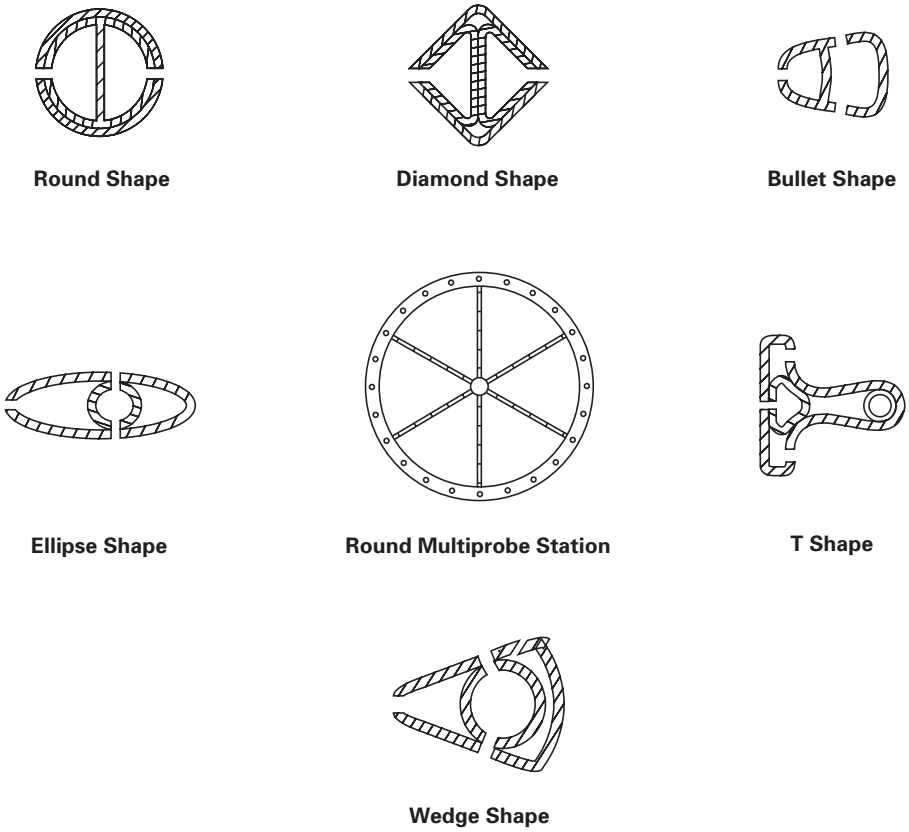

Fig. A-1 Some Typical Cross Sections of Multiport Averaging Pitot Primary Flowmeters

--`,,```,,,,````-`-`,,`,,`,`,,`---

Copyright ASME International
Provided by IHS under license with ASME
No reproduction or networking permitted without license from IHS
Not for Resale

NONMANDATORY APPENDIX B
MULTIPORT AVERAGING PITOT PRIMARY ELEMENT FLOW THEORY

B-1 FLOW EQUATION

The flow equation for averaging Pitot tubes are derived from the same basic hydraulic principles as those of other differential pressure flow devices. The flow equation relates the differential pressure produced across the primary element to the velocity of the fluid in the pipe. The averaging Pitot tube equation is based on an energy balance as expressed in Bernoulli's equation

$$\frac{U_1^2}{2} + \frac{P_1}{\rho_1} + \rho_1 g z_1 = \frac{U_2^2}{2} + \frac{P_2}{\rho_2} + \rho_2 g z_2 \qquad \text{(B-1)}$$

where the subscripts 1 and 2 refer to the conditions in the flow stream in front of the averaging Pitot tube and at the sensing ports respectively.

For incompressible fluids it is assumed that $\rho_1 = \rho_2 = \rho$. Furthermore, for horizontal pipes $z_1 = z_2$, which eliminates the potential energy terms from eq. (B-1). It is also assumed that the fluid velocity at the sensing ports is zero, $U_2 = 0$. The pressure at each of the sensing ports is the sum of the static pressure in the pipe and the pressure generated by bringing the fluid flowing in the pipe to rest. While minor circulation between the multiple sensing ports may occur in the APT internal passages, the velocities associated with this flow are extremely small and may be considered negligible. In vertical piping installations the effect of elevation differences between the high and low side of the primary element must be zeroed out during installation and startup. This is done either by bringing them to a secondary device that senses both at a common elevation, or zeroing out any head effects in the secondary device, or both. See MFC-8M for more information on the connections between the APT and the secondary element.

Solving for U_1 yields

$$U_1 = \sqrt{2\frac{(P_2 - P_1)}{\rho}} = \sqrt{\frac{2\Delta P}{\rho}} \qquad \text{(B-2)}$$

where

$$\Delta P = P_2 - P_1 \qquad \text{(B-3)}$$

The general equation describing the mass flow in a pipe for an averaging Pitot is

$$q_m = KA\rho U \qquad \text{(B-4)}$$

where

A = cross-sectional area of the pipe
K = averaging Pitot tube flow coefficient
$= \dfrac{\text{actual flow rate}}{\text{theoretical flow rate}}$
q_m = mass flow rate
U = average fluid velocity in the pipe

Combining eq. (B-2) and eq. (B-4), and assuming that the fluid velocity is uniform across the cross-section of the pipe, yields

$$q_m = K A \sqrt{2\rho \Delta P} \qquad \text{(B-5)}$$

B-2 EXPANSIBILITY (EXPANSION FACTOR)

An expansibility or expansion factor (ε) is introduced because the density of a compressible fluid will not be constant with pressure changes as was assumed in the development of eq. (B-5). This modification accounts for the fluid velocity changes and resultant density changes in compressible fluids at the pressure measurement locations

$$q_m = K \varepsilon A \sqrt{2\rho \Delta P} \qquad \text{(B-6)}$$

A general form of the equation for ε is derived from thermodynamic principles assuming adiabatic expansion of the gas between the two measuring points. However, specific equations for expansibility are dependent on the shape, design, and sensing port locations for a given averaging Pitot tube. In practice, the value for ε at various flowing conditions is determined empirically for a specific averaging Pitot tube design. As shown in eq. (B-7), expansibility is a function of known geometry, gas properties, and measured process variables

$$\varepsilon = \varepsilon\,(\Delta P, P, \text{Pitot and pipe geometry factors, gas properties}) \qquad \text{(B-7)}$$

The value of ε is typically very close to 1.00 except in cases of high velocity, low-pressure gas flow. In those cases where the differential pressure is a significant fraction of the pipe static pressure, consideration of the expansibility is recommended for the most accurate flow measurement.

Copyright ASME International
Provided by IHS under license with ASME
No reproduction or networking permitted without license from IHS
Not for Resale

B-3 REFERENCE PRESSURE MEASUREMENT

(a) The derivation of eq. (B-6) assumed that the ΔP produced by the averaging Pitot is the difference between the total pressure on the front surface of the element (stagnation pressure) and the pressure in the fluid upstream. While this is one possible configuration for an averaging Pitot tube, others are possible. Reference pressure ports for averaging Pitot tubes may be located

(1) on the pipe wall

(2) on the downstream surface of the averaging Pitot tube strut

(3) on the side surface of the averaging Pitot tube strut

In general, each of these pressure sensing locations will lead to a different reference pressure measurement for a given set of flowing conditions and in turn a different K value in the averaging Pitot flow eq. (B-6).

(b) The reference pressure sensing port location plays a key role in determining the characteristics of the averaging Pitot tube ΔP signal. Reference pressure ports that are located downstream of the point where the fluid flow separates from the Pitot strut surface (in the separation zone) will typically result in

(1) higher ΔP signal levels

(2) some pressure signal instability associated with separated flows

(c) The ΔP signal from an APT which has reference pressure ports located in a nonseparated zone or on the pipe wall will typically be

(1) smaller in magnitude

(2) more stable

The above differences, coupled with the fact that APTs typically produce a smaller ΔP signal than other differential pressure-based devices, make the location of the reference pressure ports an important factor in an APT's overall flow measurement performance. The magnitude and stability of the ΔP signal should be carefully considered when assembling an APT flow measurement system. In some flow applications, the magnitude of the ΔP signal may be outside the capabilities of the secondary element. While in other applications, ΔP signal instability may make the flow measurement ineffective for process control purposes.

B-4 STAGNATION PRESSURE MEASUREMENT

The stagnation pressure (total pressure) is measured on the front surface of the averaging Pitot tube. Like a single point Pitot, the pressure at each of the APT's sensing ports is the total of the static pressure in the pipe and the dynamic pressure produced by bringing the flowing fluid to rest at the port. The relation between the fluid velocity directly upstream of the sensing port and the pressure at the port is

$$P_i = P_s + \frac{\rho U_i^2}{2} \tag{B-8}$$

Multiple sensing ports are incorporated in the design of an APT in order to provide a more complete sample of the flow velocity across the pipe. The pressures at the individual ports are combined through internal passages in the APT, which are in turn connected to the APT's external high pressure tap. The pressure measured at that tap represents the average of the pressures at the sensing ports

$$\text{Average pressure} = P_s + \frac{\sum_{i=1}^{n} \frac{\rho U_i^2}{2}}{n} \tag{B-9}$$

To produce the averaging Pitot tube's ΔP output, the reference pressure of the APT is subtracted from the average stagnation pressure in eq. (B-9). In practice, a secondary element is connected across the two pressure taps of the APT and the ΔP measurement is used in eq. (B-6) to calculate the fluid flow rate.

B-5 AVERAGING AND FLOW PROFILE EFFECTS

The basic flow eq. (B-4) assumes a uniform (constant) flow velocity across the pipe. However, real pipe flows involve velocity profiles that change depending on location on the pipe cross-section. While the relation between differential pressure and fluid velocity is well defined for a constant or uniform velocity profile [see eq. (B-2)], it is not as clear for nonuniform flow profiles. The multiple sensing ports on the APT are located so as to give an average differential pressure that can be related to the average fluid velocity and the flow rate, q_m, through eq. (B-6) when the velocity profile is not constant. APT manufacturers use several sensing port location schemes, which are intended to reduce the inaccuracy caused by using the average differential pressure to measure the average fluid velocity. Among the commonly used sensing port location schemes are

(a) centroid of equal areas — locations at centers of equal annular areas elements

(b) Chebyshef — locations at points mathematically determined to minimize error of equally weighted samples

Regardless of the averaging scheme used, the flow coefficient, K, is typically determined by flow testing in fully developed flow profiles. The average differential pressure along the length of the APT strut produces a measurement of the average fluid velocity for fully developed flow profiles. The averaging scheme is then relied on to compensate for minor changes or asymmetries in the flow profile. Changes in velocity profile caused by piping elements found in industrial installations can cause significant flow profile distortions and can change the relative magnitude of the reference pressure measured on the strut or cylinder, which result in

Copyright ASME International
Provided by IHS under license with ASME
No reproduction or networking permitted without license from IHS Not for Resale

shifts in the relationship between the average differential pressure and the average fluid velocity. Therefore, while the APT can be installed in applications where the flow may have some degree of profile distortion and will compensate for some skewness or asymmetry, there are limits to the amount of profile distortion that the APT's averaging scheme will accommodate. These limits are typically given through the use of charts or tables of recommended straight piping runs after common flow profile disturbances such as

(a) elbows
(b) pipe size reductions
(c) pipe size expansions
(d) valves

Straight piping requirements will be dependent on both the averaging scheme used and the type of flow profile distortion caused by the piping elements upstream of the APT. The manufacturer should be consulted for additional information when installing an APT downstream of these types of disturbances.

Copyright ASME International
Provided by IHS under license with ASME
No reproduction or networking permitted without license from IHS
Not for Resale

ASME Services

ASME is committed to developing and delivering technical information. At ASME's Information Central, we make every effort to answer your questions and expedite your orders. Our representatives are ready to assist you in the following areas:

ASME Press
Codes & Standards
Credit Card Orders
IMechE Publications
Meetings & Conferences
Member Dues Status
Member Services & Benefits
Other ASME Programs
Payment Inquiries
Professional Development
Short Courses
Publications
Public Information
Self-Study Courses
Shipping Information
Subscriptions/Journals/Magazines
Symposia Volumes
Technical Papers

How can you reach us? It's easier than ever!

There are four options for making inquiries* or placing orders. Simply mail, phone, fax, or E-mail us and an Information Central representative will handle your request.

Mail
ASME
22 Law Drive, Box 2900
Fairfield, New Jersey
07007-2900

Call Toll Free
US & Canada: 800-THE-ASME
(800-843-2763)
Mexico: 95-800-THE-ASME
(95-800-843-2763)
Universal: 973-882-1167

Fax—24 hours
973-882-1717
973-882-5155

E-Mail—24 hours
Infocentral@asme.org

* Information Central staff are not permitted to answer inquiries about the technical content of this code or standard. Information as to whether or not technical inquiries are issued to this code or standard is shown on the copyright page. All technical inquiries must be submitted in writing to the staff secretary. Additional procedures for inquiries may be listed within.

Copyright ASME International
Provided by IHS under license with ASME
No reproduction or networking permitted without license from IHS
Not for Resale

Copyright ASME International
Provided by IHS under license with ASME
No reproduction or networking permitted without license from IHS
Not for Resale

ASME MFC-12M–2006

ISBN 0-7918-3012-8





K15206

Copyright ASME International
Provided by IHS under license with ASME
No reproduction or networking permitted without license from IHS

Not for Resale