ASME MFC-11M–2003
[Revision of ASME MFC-11M–1989 (R1994)]

MEASUREMENT OF FLUID FLOW BY MEANS OF CORIOLIS MASS FLOWMETERS

AN AMERICAN NATIONAL STANDARD



The American Society of Mechanical Engineers

Copyright ASME International
Provided by IHS under license with ASME
No reproduction or networking permitted without license from IHS

Not for Resale

The American Society of Mechanical Engineers

AN AMERICAN NATIONAL STANDARD

MEASUREMENT OF FLUID FLOW BY MEANS OF CORIOLIS MASS FLOWMETERS

ASME MFC-11M–2003

[Revision of ASME MFC-11M–1989 (R1994)]

Copyright ASME International
Provided by IHS under license with ASME
No reproduction or networking permitted without license from IHS

Not for Resale

Date of Issuance: May 9, 2003

This Standard will be revised when the Society approves the issuance of a new edition. There will be no addenda issued to this edition.

ASME issues written replies to inquiries concerning interpretations of technical aspects of this Standard. Interpretations are published on the ASME Web site under the Committee Pages at http://www.asme.org/codes/ as they are issued.

ASME is the registered trademark of The American Society of Mechanical Engineers.

This code or standard was developed under procedures accredited as meeting the criteria for American National Standards. The Standards Committee that approved the code or standard was balanced to assure that individuals from competent and concerned interests have had an opportunity to participate. The proposed code or standard was made available for public review and comment that provides an opportunity for additional public input from industry, academia, regulatory agencies, and the public-at-large.

ASME does not "approve," "rate," or "endorse" any item, construction, proprietary device, or activity.

ASME does not take any position with respect to the validity of any patent rights asserted in connection with any items mentioned in this document, and does not undertake to insure anyone utilizing a standard against liability for infringement of any applicable letters patent, nor assume any such liability. Users of a code or standard are expressly advised that determination of the validity of any such patent rights, and the risk of infringement of such rights, is entirely their own responsibility.

Participation by federal agency representative(s) or person(s) affiliated with industry is not to be interpreted as government or industry endorsement of this code or standard.

ASME accepts responsibility for only those interpretations of this document issued in accordance with the established ASME procedures and policies, which precludes the issuance of interpretations by individuals.

No part of this document may be reproduced in any form,
in an electronic retrieval system or otherwise,
without the prior written permission of the publisher.

The American Society of Mechanical Engineers
Three Park Avenue, New York, NY 10016-5990

Copyright © 2003 by
THE AMERICAN SOCIETY OF MECHANICAL ENGINEERS
All rights reserved
Printed in U.S.A.

Copyright ASME International
Provided by IHS under license with ASME
No reproduction or networking permitted without license from IHS

Not for Resale

CONTENTS

Foreword iv
Committee Roster v
Correspondence With the MFC Committee vi

1 Scope 1

2 Terms and Definitions 1

3 Coriolis Meter Selection and Application Guidelines 2

4 Inspection and Compliance 5

5 Mass Flow Measurement 5

6 Density Measurement Under Metering Conditions 7

7 Volume Flow Measurement Under Metering Conditions 9

8 Additional Measurements 10

Figure
1 Principle of Operation of a Coriolis Meter 6

Table
1 Symbols 2

Nonmandatory Appendices
A Flow Calibration Techniques 13
B Secondary Containment of Coriolis Meters 16
C Coriolis Meter Specifications 18
D Mass Fraction Measurement Examples 19

References 21

--`,,`,,`-`-`,,`,,`,`,,`---

Copyright ASME International
Provided by IHS under license with ASME
No reproduction or networking permitted without license from IHS

Not for Resale

FOREWORD

Coriolis flowmeters cover a family of devices with varying designs that depend on the Coriolis force generated by the fluid flowing through oscillating tube(s). The primary purpose of Coriolis meters is to measure mass flow. However, some of these meters also measure fluid density and temperature of the tube wall. From the measurement of these three parameters, volume flow and other related quantities can be determined.

This Standard, ASME MFC-11M, is intended to establish common terminology for this technology regarding the use, installation, and performance of these flowmeters.

This Standard was approved by the American National Standards Institute on January 16, 2003.

Copyright ASME International
Provided by IHS under license with ASME
No reproduction or networking permitted without license from IHS
Not for Resale

ASME MFC COMMITTEE
Measurement of Fluid Flow in Closed Conduits

(The following is the roster of the Committee at the time of approval of this Standard.)

OFFICERS

Z. D. Husain, *Chair*
R. J. DeBoom, *Vice Chair*
R. L. Crane, *Secretary*

COMMITTEE PERSONNEL

C. J. Blechinger, Consultant
R. W. Caron, Visteon Corp.
G. P. Corpron, Consultant
R. L. Crane, *Secretary,* The American Society of Mechanical Engineers
R. J. DeBoom, *Vice Chair,* Daniel Measurement and Control
P. G. Espina, Controlotron Corp.
D. Faber, Badger Meter, Inc.
R. H. Fritz, Saudi Aramco
F. D. Goodson, Daniel Measurement and Control
E. H. Jones, Jr., Chevron Petroleum Technology
Z. D. Husain, *Chair,* Chevron Texaco
T. M. Kegel, Colorado Engineering Experiment Station, Inc.
C. G. Langford, Cullen G. Langford, Inc.
W. M. Mattar, Invensys/Foxboro Co.
G. E. Mattingly, National Institute of Standards and Technology
D. R. Mesnard, Direct Measurement Corp.
R. W. Miller, R. W. Miller and Associates, Inc.
A. M. Quraishi, American Gas Association
B. K. Rao, Consultant
W. F. Seidl, Colorado Engineering Experiment Station, Inc.
D. W. Spitzer, Copperhill and Pointer, Inc.
D. H. Strobel, Consultant
J. H. Vignos, Consultant
D. E. Wiklund, Rosemount, Inc.
D. C. Wyatt, Wyatt Engineering

SUBCOMMITTEE 18 — DYNAMIC MASS FLOWMETERS

R. J. DeBoom *Chair,* Daniel Measurement and Control
R. L. Crane, *Secretary,* The American Society of Mechanical Engineers
C. M. Annarummo, Fisher Rosemount
G. Bugher, Endress and Hauser, Inc.
J. A. Condron, Union Carbide Tech Center
G. P. Corpron, Consultant
W. C. Gotthardt, Krohne
Z. D. Husain, Chevron Texaco
M. J. Keilty, Endress and Hauser/Flowtec Division
W. M. Mattar, Invensys/Foxboro Co.
D. R. Mesnard, Direct Measurement Corp.
A. M. Quraishi, American Gas Association
B. K. Rao, Consultant
D. W. Spitzer, Copperhill and Pointer, Inc.

Copyright ASME International
Provided by IHS under license with ASME
No reproduction or networking permitted without license from IHS
Not for Resale

CORRESPONDENCE WITH THE MFC COMMITTEE

General. ASME Standards are developed and maintained with the intent to represent the consensus of concerned interests. As such, users of this Standard may interact with the Committee by requesting interpretations, proposing revisions, and attending committee meetings. Correspondence should be addressed to:

Secretary, MFC Standards Committee
The American Society of Mechanical Engineers
Three Park Avenue
New York, NY 10016-5990

Proposing Revisions. Revisions are made periodically to the Standard to incorporate changes that appear necessary or desirable, as demonstrated by the experience gained from the application of the Standard. Approved revisions will be published periodically.

The Committee welcomes proposals for revisions to this Standard. Such proposals should be as specific as possible, citing the paragraph number(s), the proposed wording, and a detailed description of the reasons for the proposal, including any pertinent documentation.

Interpretations. Upon request, the MFC Committee will render an interpretation of any requirement of the Standard. Interpretations can only be rendered in response to a written request sent to the Secretary of the MFC Standards Committee.

The request for interpretation should be clear and unambiguous. It is further recommended that the inquirer submit his request in the following format:

Subject:	Cite the applicable paragraph number(s) and the topic of the inquiry.
Edition:	Cite the applicable edition of the Standard for which the interpretation is being requested.
Question:	Phrase the question as a request for an interpretation of a specific requirement suitable for genral understanding and use, not as a request for an approval of a proprietary design or situation. The inquirer may also include plans or drawings which are necessary to explain the question; however, they should not contain proprietary names or information.

Requests that are not in this format will be rewritten in this format by the Committee prior to being answered, which may inadvertently change the intent of the original request.

ASME procedures provide for reconsideration of any interpretation when or if additional information that might affect an interpretation is available. Further, persons aggrieved by an interpretation may appeal to the cognizant ASME Committee or Subcommittee. ASME does not "approve", "certify", "rate", or "endorse" any item, construction, proprietary device, or activity.

Attending Committee Meetings. The MFC Committee regularly holds meetings, which are open to the public. Persons wishing to attend any meeting should contact the Secretary of the MFC Standards Committee.

Copyright ASME International
Provided by IHS under license with ASME
No reproduction or networking permitted without license from IHS
Not for Resale

MEASUREMENT OF FLUID FLOW BY MEANS OF CORIOLIS MASS FLOWMETERS

1 SCOPE

This Standard, ASME MFC-11M, gives guidelines for the selection, installation, calibration, and operation of Coriolis meters for the determination of mass flow, density, volume flow, and other related parameters of flowing fluids. It also gives appropriate considerations regarding the fluids to be measured. The content of this Standard is primarily applied to the metering of liquids. This Standard also gives guidance, within specified limits, to the metering of other fluids, mixtures of solids or gas in liquids, and mixtures of liquids. Although Coriolis meters may be used for gas measurement, specific guidance for gas measurement is not within the scope of this Standard.

2 TERMS AND DEFINITIONS

The terminology and symbols (Table 1) used in this Standard are in accordance with ASME MFC-1M.

Terminology not defined in ASME MFC-1M but used in ASME MFC-11M are also defined in this paragraph. Some items from ASME MFC-1M are also listed in this paragraph for easier reference.

accuracy of measurement: the degree of freedom from error; the degree of conformity of the indicated value to the true value of the measured quantity (see ASME MFC-1M).

calibration: for the purpose of this Standard, calibration strictly refers to the procedure by which the flowmeter is checked against a traceable reference and does not include adjustment to the calibration factors.

calibration factor(s): numerical factor(s), also called flow calibration factors, unique to each primary device and determined by flow calibration, which when programmed into the transmitter, enables the meter to perform to its stated specification (see the note in para. A1 of Appendix A for a definition of calibration).

density calibration factor(s): calibration factor(s) associated with density measurement.

flow calibration factor(s): calibration factor(s) associated with mass flow measurement.

cavitation: the violent collapse of vapor bubbles formed after flashing when the line pressure rises above the vapor pressure of the liquid (see ASME MFC-1M).

Coriolis meter: a device consisting of a flow sensor (primary device) and a transmitter (secondary device), which measures the mass flow by means of the Coriolis force generated by flowing fluid through oscillating tube(s); it may also provide measurements of density and temperature.

cross-talk: if two or more Coriolis meters are to be mounted close together, interference through mechanical coupling may occur. This is often referred to as cross-talk. The manufacturer should be consulted for methods of avoiding cross-talk.

elemental error: the bias and/or precision error associated with a single source or process in a chain of sources or processes (see ASME MFC-1M).

flashing: the formation of vapor bubbles in a liquid when the line pressure falls to or below the vapor pressure of the liquid, often due to local lowering of pressure because of an increase in the liquid velocity (see ASME MFC-1M).

flow rate: the quantity of fluid flowing though a cross section of a pipe per unit of time (see ASME MFC-1M).

mass flow rate (q_m): the rate of flow of fluid mass through a cross section of a pipe (see ASME MFC-1M).

volume flow rate (q_v): the rate of flow of fluid volume through a cross section of a pipe (see ASME MFC-1M).

flow sensor (primary device): a mechanical assembly consisting of an oscillating tube(s), drive system, measurement sensor(s), supporting structure, flanges/fittings, and housing.

drive system: means for inducing the oscillation of the tube(s).

housing: environmental protection of the flow sensor.

measurement sensor: sensor to detect the Coriolis effect and to measure the frequency of the tube oscillations.

oscillating tube(s): tube(s) through which the fluid to be measured flows.

secondary containment: housing designed to provide protection to the environment if the sensor tube(s) fails.

supporting structure: support for the oscillating tube(s).

repeatability of measurements: the closeness of agreement between successive results obtained with the same

Copyright ASME International
Provided by IHS under license with ASME
No reproduction or networking permitted without license from IHS
Not for Resale

Table 1 Symbols

Quantity	Symbol	Dimensions	Corresponding SI Units
Mass flow rate	q_m	MT^{-1}	kg/s
Volume flow rate	q_v	L^3T^{-1}	m^3/s
Radial acceleration	a_r	...	...
Transverse acceleration	a_t	...	...
Coriolis force	F_c	...	...
Natural frequency	f_R	...	...
Mechanical stiffness — spring constant	C	...	...
Total oscillating mass	m	M	kg
Oscillating mass of measuring tube(s)	m_t	M	kg
Oscillating mass of fluid within the tube(s)	m_{fl}	M	kg
Volume of fluid within the tube(s)	V_{fl}	L^3	m^3
Density of fluid at operating conditions	ρ_{fl}	ML^{-3}	kg/m^3
Period of the tube oscillation	T_f	T	s
Number of cycles	N_c	...	...
Time window	t_w	...	...
Relative density	d	...	...
Density of water under reference conditions	$\rho_{w,ref}$	ML^{-3}	kg/m^3
Accuracy of the volume measurement	ε_v	...	...
Accuracy of the mass measurement	ε_m	...	...
Accuracy of the density measurement	ε_ρ	...	...

method on identical test material, under the same conditions (same operator, same apparatus, same laboratory, and short intervals of time) (see ASME MFC-1M).

transmitter (secondary device): electronic system providing the drive and transforming the signals from the flow sensor to give output(s) of measured and inferred parameters; it also provides corrections derived from parameters such as temperature.

uncertainty of measurement: the range within which the true value of the measured quantity can be expected to lie with a suitable high probability (see ASME MFC-1M).

zero offset: flow measurement indicated under zero flow conditions.

zero stability: maximum expected magnitude of the meter output at zero flow after the zero adjustment procedure has been completed, expressed by the manufacturer as an absolute value in mass per unit time.

3 CORIOLIS METER SELECTION AND APPLICATION GUIDELINES

3.1 Flowmeter Selection Criteria

The selection of a Coriolis flowmeter should take into account the range of flow rate, performance requirements, and the fluid parameters. The following are major considerations that are recommended for review for each application. Special applications may require consultation with the manufacturer.

3.1.1 Range of Flow Rate and Pressure Loss. Although capable of measuring a large range of flows, the flowmeter selected should provide the required measurements with the accuracy and pressure loss considered suitable for the application. The amount of pressure loss will depend on the sensor design, flow rate, density, and viscosity. For a given flow rate a larger sensor will provide lower pressure loss.

3.1.2 Flowmeter Performance vs. Flow Rate. Coriolis flowmeters are rated at a prescribed standard, or "normal" flow rate, at reference conditions. The performance is determined at these conditions. The overall error in flow rate, as a percent of value, will typically increase with decreasing flow. The overall meter performance may be predicted from information supplied by the manufacturer during the selection process.

3.1.3 Design Pressure and Temperature. The selected meter design pressure and temperature must meet the requirements of the application. Most manufacturers offer flowmeter options that allow a wide range of pressure and temperature conditions.

3.2 Performance

The expression of performance varies depending on the parameter to which it applies. For specific recommendations on the accuracy of mass flow, density, and volume flow, see paras. 5.2, 6.4, and 7.3, respectively. For other parameters see para. 8.

--`,,``,,-`-`,,`,,`,`,,`---
Copyright ASME International
Provided by IHS under license with ASME
No reproduction or networking permitted without license from IHS
Not for Resale

NOTE: Manufacturers' performance statements should be given for specified reference conditions. If the conditions of use are significantly different from those of the original calibration, the meter's performance may be affected. In such cases, the manufacturer should be consulted.

3.3 Physical Installation

3.3.1 General. The manufacturer should describe the preferred installation arrangement and state any restrictions of use. See Appendix C. If needed, strainers, filters, air, and/or vapor eliminators or other protective devices should be placed upstream of the meter for the removal of solids or vapors that could cause damage or induce errors in measurement. Coriolis meters are generally placed in the mainstream of the flow but can also be placed in a by-pass arrangement for density measurements.

3.3.2 Installation Criteria. Consideration should be given to the following points:

(a) the space required for the Coriolis meter installation, including provision for external prover or master-meter connections, should in situ calibration be required

(b) the class and type of pipe connections and materials, as well as the dimensions of the equipment to be used

(c) the hazardous area classification

(d) the environmental effects on the sensor (e.g., temperature, humidity, corrosive atmospheres, mechanical shock, vibration, and electromagnetic field)

(e) the mounting and support requirements

3.3.3 Full-Pipe Requirement. The meter performance is impaired if the tubes are not completely filled with the flowing fluid. The manufacturer may be consulted for information on the meter's performance and possible methods to purge or drain gases and/or liquids from the sensor.

3.3.4 Orientation. For proper operation, the flow sensor should be mounted such that the oscillating tube(s) remain completely filled with the process fluid while the fluid is being metered. Plugging, coating, trapped gas, or settling of solids can affect the meter's performance. The orientation of the primary device will depend on the application as well as the geometry of the oscillating tube(s).

3.3.5 Flow Conditions and Straight Length Requirements. The performance of substantially bent bending-mode Coriolis flowmeters are generally not affected by velocity profile or fluid swirl. Straight piping lengths adjacent to the meter are not typically required. Some slightly bent Coriolis meters may be affected by velocity profile and swirl, so the Coriolis meter manufacturer's information should be consulted for specific requirements.

3.3.6 Valves. Valves upstream and downstream of a Coriolis meter, installed for the purpose of isolation and zero adjustment, can be of any type, but should provide tight shutoff. Control valves in series with a Coriolis meter should be installed downstream in order to maintain a higher pressure in the meter and thus reduce the chance of cavitation or flashing.

3.3.7 Cleaning. For certain applications the Coriolis meter may require in situ cleaning, which, depending on design, may be accomplished by

(a) mechanical means (using a pig or ultrasonically)

(b) self-draining

(c) hydrodynamic means:

(1) sterilization [steaming-in-place, (SIP)]

(2) chemical or biological [cleaning-in-place, (CIP)]

NOTES:

(1) Care should be taken to avoid cross-contamination after cleaning fluids have been used.

(2) Chemical compatibility should be established between the sensor wetted-materials, process fluid, and cleaning fluid.

3.3.8 Hydraulic and Mechanical Vibrations. The manufacturer shall provide the mechanical operating frequency of the instrument to enable assessment of possible influence of process or other external mechanically imposed vibration frequencies. It is possible that the performance of the meter may be influenced by vibrations at other than the operating tube frequency. Consultation with the manufacturer may be appropriate if vibration problems are anticipated or if they occur.

In environments with high mechanical vibrations or flow pulsation, consider the use of isolation or pulsation damping devices (see para. 3.4.7). It is advised to consult the manufacturer for guidance in this case.

3.3.9 Flashing and/or Cavitation. The relatively high fluid velocities, which may occur in Coriolis meters, cause local dynamic pressure drops inside the meter, which may result in flashing and/or cavitation. Both flashing and cavitation in Coriolis meters (and immediately upstream and/or downstream of them) should be avoided. Flashing and cavitation may cause measurement errors and may damage the sensor.

3.3.10 Pipe Stress and Torsion. The flow sensor will be subjected to axial, bending, and torsional forces during operation. Changes in these forces, resulting from variations in process temperature and/or pressure, can affect the performance of the Coriolis meter, particularly at flow rates low in the meter's range. Under no circumstances should the Coriolis meter be used to align and/or support the pipe work.

3.3.11 Cross-Talk Between Sensors. If two or more Coriolis meters are to be mounted close together, interference through mechanical coupling may occur. This is often referred to as cross-talk. The manufacturer should be consulted for methods of avoiding cross-talk.

Copyright ASME International
Provided by IHS under license with ASME
No reproduction or networking permitted without license from IHS
Not for Resale

3.4 Process Conditions and Fluid Properties

3.4.1 General. Variations in fluid properties and process conditions may influence the meter's performance. Refer to paras. 5.3, 6.5, 7.4, and 8.3 through 8.5.

3.4.2 Application Considerations. In order to select a meter for a given application, it is important to establish the range of conditions to which the Coriolis meter will be subjected. These conditions should include:

(a) the operating flow rates and the following flow characteristics: unidirectional or bi-directional, continuous, intermittent, or fluctuating

(b) the range of operating densities

(c) the range of operating temperatures

(d) the range of operating pressures

(e) the permissible pressure loss

(f) the range of operating viscosities

(g) the properties of the metered fluids, including vapor pressure at operating conditions

(h) the effects of corrosive additives or contaminants on the meters and the quantity and size of foreign matter, including abrasive particles that may be carried in the liquid stream

3.4.3 Multiphase Flow (See Also Paras. 6.5.4 and 7.4.3). Liquid mixtures, homogeneous mixtures of solids in liquids, or homogeneous mixtures of liquids with low volumetric ratios of gas can be measured satisfactorily. Multiphase applications involving non-homogeneous mixtures can cause additional measurement errors and in some cases can stop operation. Contact the manufacturer for additional details.

Care should be taken to ensure that gas bubbles and/or solids are not allowed to accumulate in the meter.

3.4.4 Influence of Process Fluid. Erosion, corrosion, and deposition of material on the inside of the vibrating tube(s) (sometimes referred to as coating) can initially cause measurement errors in flow and density, and in the long-term, sensor failure. Proper selection of the flowmeter material can reduce the instance of failure. Periodic inspection and maintenance should be done on the flowmeter for applications that may cause these types of problems.

3.4.5 Temperature Effects. A change in temperature will affect the properties of sensor materials, and thus will influence the response of the sensor. A means of compensation for this effect is usually incorporated in the transmitter.

3.4.6 Pressure Effects. Static pressure changes can affect the accuracy of the sensor, the extent of which should be specified by the manufacturer. These changes are generally insignificant.

3.4.7 Pulsating Flow Effects. Coriolis meters generally are able to perform under pulsating flow conditions. However, there may be circumstances where pulsations can affect the performance of the meter (see para. 3.3.8). The manufacturer's recommendations should be observed regarding the application and the possible use of pulsation damping devices.

3.4.8 Viscosity Effects. Fluids with high viscosity may draw energy from the flow sensor drive system particularly at the start of flow. Depending on the meter design, this phenomenon can cause the oscillating tubes to momentarily stall until the flow is properly established. This phenomenon can induce a temporary alarm condition.

3.5 Pressure Loss

A loss in pressure will occur as the fluid flows through the flow sensor. The magnitude of this loss will be a function of the size and geometry of the oscillating tube(s), the mass flow rate (velocity), and dynamic viscosity of the process fluid. Manufacturers should specify the loss in pressure that occurs under reference conditions and should provide the information necessary to calculate the loss in pressure, which occurs under operating conditions. The overall pressure of the system should be checked to ensure that it is sufficiently high to accommodate the loss in pressure across the meter.

3.6 Safety

3.6.1 General. The meter should not be used under conditions that are outside the meter's specification. Meters also should conform to any necessary hazardous area classifications. The following additional safety considerations should be made.

3.6.2 Hydrostatic Pressure Test. The wetted parts of the fully assembled flow sensor can be hydrostatically tested in accordance with the appropriate standard where specified (see para. 4).

3.6.3 Mechanical Stress. The meter should be designed to withstand all loads originating from the oscillating tube(s) system, temperature, pressure, and pipe vibration. The user should respect the limitations of the flow sensor.

3.6.4 Erosion. Fluids containing solid particles or cavitation can cause erosion of the measuring tube(s) during flow. The effect of erosion is dependent on meter size and geometry, particle size, abrasives, and velocity. Erosion should be assessed for each type of use of the meter.

3.6.5 Corrosion. Corrosion of the wetted materials can adversely affect the operating lifetime of the flow sensor. The construction material of the sensor should be selected to be compatible with process fluids and cleaning fluids. Special attention should be given to corrosion and galvanic effects in no-flow or empty-pipe conditions. All sensor process-wetted materials shall be identified by the manufacturer.

Copyright ASME International
Provided by IHS under license with ASME
No reproduction or networking permitted without license from IHS

Not for Resale

3.6.6 Housing Design

(a) The housing should be designed primarily to protect the flow sensor from the effects of the surrounding environment (dirt, condensation, and mechanical interference), which could interfere with operation. If the vibrating tube(s) of the Coriolis meter were to fail, the housing containing the tube(s) would be exposed to the process fluid and conditions, which could possibly cause housing failure. It is important to take into consideration the following possibilities:

(1) the pressure within the housing might exceed the design limits

(2) the fluid might be toxic, corrosive, or volatile and might leak from the housing

(b) In order to avoid such problems, certain housing designs provide

(1) secondary pressure containment

(2) burst discs or pressure-relief valves, fluid drains or vents, etc.

For guidelines on specifying secondary pressure containment, see Appendix B.

3.6.7 Cleaning. For general guidelines see para. 3.3.7.

Care should be taken to ensure that cleaning conditions (fluids, temperatures, flow rates, etc.) have been selected to be compatible with the materials of the Coriolis meter.

3.7 Transmitter (Secondary Device)

Coriolis meters are multivariable instruments providing a wide range of measurement data from a single connection to the process. The electronics are typically located in an enclosure, which may be mounted locally on the sensor, or remotely, and connected to the sensor using a cable. When selecting the most appropriate transmitter arrangement and options, consideration should be given to the following:

(a) the electrical, electronic, climatic, and safety compatibility

(b) the hazardous area classification of the flow sensor, and transmitter, and the availability of special enclosure options

(c) the transmitter enclosure mounting (i.e., integral or remote)

(d) the number and type of outputs, including digital communications

(e) the ease and security of programming

(f) the meter diagnostic capability, and whether there are output(s) to allow remote indication of system errors

(g) the available input options (e.g., remote zero adjustment, totalizer resetting, alarm acknowledgment)

(h) the capability for local display and operation

4 INSPECTION AND COMPLIANCE

(a) As Coriolis meters are an integral part of the piping (in-line instrumentation), it is essential that the instrument be subjected to testing procedures similar to those applied to other in-line equipment.

In addition to the instrument calibration and/or performance checks, the following optional tests may be performed to satisfy the mechanical requirements:

(1) dimensional check

(2) optional hydrostatic test, in accordance with a traceable procedure as specified by the user

(3) radiographic and/or ultrasonic examination of the primary device to detect internal defects (i.e., inclusions) and verify weld integrity

Results of the above tests should be presented in a certified report, when requested.

(b) In addition to the above reports, the following certificates, when requested, should be available:

(1) material certificates, for all pressure-containing parts

(2) certificate of conformance (electrical area classifications)

(3) certificate of suitability for legal trade or custody transfer

(4) calibration certificate and performance results

(5) certificate of suitability for sanitary applications

5 MASS FLOW MEASUREMENT

Coriolis meters directly measure mass flow rate, and some can measure the flowing density of the process fluid. Paragraphs 5 and 6 describe the underlying principles for these measurements. Inferred measurements such as volumetric flow and concentration are described in paras. 7 and 8.

5.1 Apparatus

5.1.1 Principle of Operation. Coriolis meters operate on the principle that inertial forces are generated whenever a particle in a rotating body moves relative to the body in a direction toward or away from the center of rotation. This principle is shown in Fig. 1.

A particle of mass Δm slides with constant velocity, v, in a tube, T, that is rotating with angular velocity, ω, about a fixed point, P. The particle undergoes an acceleration, which can be divided into two components:

(a) a radial acceleration, a_r (centripetal), equal to $\omega^2 r$ and directed towards P

(b) a transverse acceleration, a_t (Coriolis), equal to $2\omega \cdot Xv$ (vector cross product) at right angles to a_r and in the direction shown in Fig. 1

To impart the Coriolis acceleration, a_t, to the particle, a force of magnitude $2v\omega\Delta m$ is required in the direction of a_t. This force comes from the tube. The reaction of this force back on the tube is commonly referred to as the Coriolis force

$$\Delta F_c = 2\omega v \, \Delta m$$

From the illustration, it can be seen that when a fluid of density, ρ, flows at constant velocity, v, along a tube

Copyright ASME International
Provided by IHS under license with ASME
No reproduction or networking permitted without license from IHS
Not for Resale

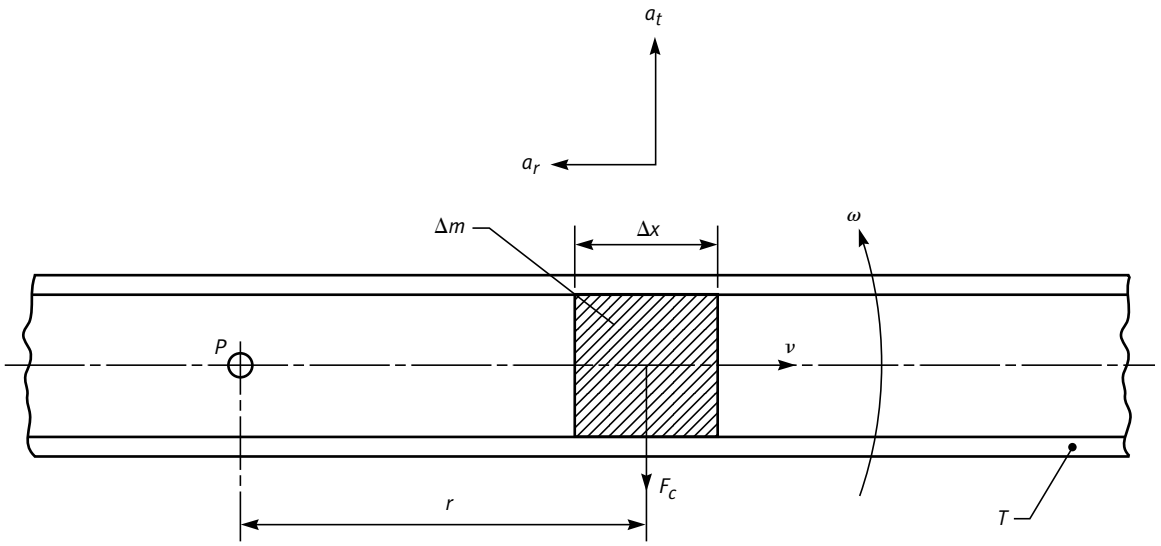

Fig. 1 Principle of Operation of a Coriolis Meter

rotating as in Fig. 1, any length Δx of the tube experiences a transverse Coriolis force of magnitude $\Delta F_c = 2\omega v \rho A \Delta x$, where A is the cross sectional area of the tube interior. Since the mass flow rate, q_m, can be expressed as

$$q_m = \rho v A \tag{1}$$

we then have that

$$\Delta F_c = 2\omega q_m \Delta x \tag{2}$$

Hence we see that (direct or indirect) measurement of the Coriolis force on a rotating tube can provide a measure of the mass flow rate. This is the basic principle of operation of the Coriolis meter.

5.1.2 Coriolis Flow Sensor. In commercial designs of Coriolis meters, the generation of inertial forces through continuous rotary motion is not practical, and instead the necessary forces are generated by oscillating the tube.

The smallest driving force required to keep the tube in constant oscillation occurs when the frequency of oscillation is at or close to the natural frequency of the filled tube.

In one class of meters, the flow tube is anchored at two points and oscillated at a position between the two anchors, thus giving rise to opposite oscillatory rotations of the two halves of the tube. In another version, a section of tube is oscillated in a rotational direction and a transverse Coriolis force is generated. Meters can have one or more tubes that can be straight or curved.

The movement of the flow tube(s) is measured at various points. When flow is present, Coriolis forces act on the oscillating tube(s), causing a small displacement, deflection, or twist that can be observed as a phase difference between the sensing points.

Coriolis forces (and hence distortion of the tube) only exist when both axial flow and forced oscillation are present. When there is forced oscillation but no flow, or flow with no oscillation, no deflection will occur and the meter will show no output.

The sensor is characterized by flow calibration factors that are determined during manufacture and calibration. These values are unique for each sensor and should be recorded on a data plate secured to the sensor.

5.1.3 Coriolis Transmitter (See Also Para. 2.3). A Coriolis meter requires a transmitter to provide the drive energy and process the measurement signals to produce a mass flow rate measurement. Also, the mass flow rate is usually integrated over time in the transmitter, thus providing the total mass.

Additional parameters exist within the transmitter software that should be configured for the specific application. Other coefficients must also be entered if density or volume outputs are required.

5.2 Accuracy

For Coriolis meters, the term "accuracy" refers to the combined effects of linearity, reproducibility, repeatability, hysteresis, and zero stability.

Zero stability is often given as a separate parameter in mass per unit time. In order to determine the accuracy, it is necessary to calculate zero stability as a percentage of the reading at a specified flow rate and add this value to the combined effects of linearity, repeatability, and hysteresis stated in units of percent of reading. A typical equation for accuracy:

Accuracy = ± (0.20% ± (zero stability/flow rate) × 100): where the combined effects (without zero stability) are ± 0.20% of reading

Copyright ASME International
Provided by IHS under license with ASME
No reproduction or networking permitted without license from IHS
Not for Resale

Repeatability can also be given as a separate parameter, expressed as a percentage of the reading.

Accuracy and repeatability statements are usually made at reference conditions that are specified by the manufacturer. These reference conditions should include temperature, humidity, pressure, fluid density, fluid, and flow range.

5.3 Factors Affecting Mass Flow Measurement

5.3.1 General. Refer to Appendix C for a list of information that users should obtain from Coriolis flowmeter suppliers.

5.3.2 Density and Viscosity. Density and viscosity have a negligible effect on the accuracy of measurements of mass flow with a Coriolis meter. Consequently, compensation is not necessary. See para. 3.4.8 for other viscosity effects.

Density and viscosity variations can also induce an offset in the meter output at zero flow. Thus, it may be necessary to check the meter zero at the process conditions (see para. 5.4).

5.3.3 Multiphase Flow. See para. 3.4.3.

5.3.4 Temperature. Temperature changes affect the mechanical structure of the flow sensor, and compensation is necessary. This compensation, based on an integral temperature sensor, is performed by the transmitter. However, large differences in temperature between the oscillating tube(s) and the ambient temperature can cause errors in the temperature compensation. The use of insulation materials can reduce these effects. Check with the manufacturer on insulation recommendations and procedures.

Temperature variations may also induce an offset in the meter output at zero flow. Thus, it may be necessary to check the meter zero at the process temperature (see para. 5.4).

NOTE: The temperature measured in the Coriolis meter is that of the tube walls and may not be the process fluid temperature.

5.3.5 Pressure. For some designs and sizes of meters, pressure changes can affect the flow calibration factor, and compensation may be necessary. See para. 3.4.6. (Consult the manufacturer.)

Pressure changes can also induce an offset in the meter output at zero flow. This effect can be eliminated by performing a zero adjustment (see para. 5.4) at the process pressure.

5.3.6 Installation. Stresses exerted on the sensor from the surrounding pipe work can introduce an offset in the meter output at zero flow. This offset should be checked after the initial installation or after any subsequent change in the installation. Zero adjustment (see para. 5.4) should be performed if the offset is unacceptable.

5.4 Zero Adjustment

After the meter installation is complete, a zero adjustment might be needed to overcome the effects described in para. 5.3. It is recommended that zero be checked and adjusted if the offset is unacceptable. Zero adjustments should be made according to the manufacturer's instruction. In general, to check or adjust the zero flow, the meter should be full and all flow stopped. Zero adjustment should be made under process conditions of temperature, pressure, and density. It is essential that the fluid remain stable and that there are no bubbles or heavy sediment and no fluid movement.

5.5 Calibration of Mass Flow

Most Coriolis meters are calibrated against a traceable standard by the manufacturer, and calibration certificates for the meter might be provided. The calibration factors determined by this procedure should be noted on the sensor data plate.

The calibration is the process of comparing the indicated flow to a traceable standard. The uncertainty of the calibration can be no less than the uncertainty of the reference standard and any errors that are introduced during the calibration.

As the Coriolis meter is a mass flow device, it is preferable to perform the calibration against a mass or gravimetric reference. Calibration against a volume standard combined with density determination can be used in situations where mass or gravimetric methods are not available.

A Coriolis master meter can be used to calibrate other Coriolis meters. The calibration of the Coriolis master meter must also be traceable to recognized standards. The same uncertainty ratios are needed for a master meter calibration as for a gravimetric calibration. Care must be taken so that cross-talk does not affect the calibration. (See para. A2.4 in Appendix A for additional information.)

Detailed calibration advice, calibration intervals, suggested procedures, calibration levels, and an example of a calibration curve are given in Appendix A.

6 DENSITY MEASUREMENT UNDER METERING CONDITIONS

6.1 General

Some Coriolis meters can provide density measurement under metering conditions. This paragraph includes recommendations for density calibration. Density-based inferred measurements such as standard density and concentration are covered in para. 8.

6.2 Principle of Operation

Coriolis meters are typically operated at their natural or resonant frequency. For a resonant system there is a relationship between this frequency and the oscillating

Copyright ASME International
Provided by IHS under license with ASME
No reproduction or networking permitted without license from IHS
Not for Resale

mass. The natural frequency of a Coriolis meter viewed as a resonant system can be written as:

$$f_R = \frac{1}{2\pi}\sqrt{\frac{C}{m}} \tag{3}$$

with

$$m = m_t + m_{fl} \tag{4}$$

and

$$m_{fl} = \rho_{fl} * V_{fl} \tag{5}$$

where

C = mechanical stiffness or spring constant of the measuring tube arrangement
V_{fl} = volume of fluid within the tube(s)
f_R = resonant or natural frequency
m = total oscillating mass
m_{fl} = oscillating mass of fluid within the tube(s)
m_t = oscillating mass of measuring tube(s)
ρ_{fl} = density of fluid at operated conditions

The mechanical stiffness or spring constant of the measuring tube arrangement depends on the design of the meter and the Young's modulus of elasticity of the tube material.

Equations (3), (4), and (5) can be used to solve for the fluid density, which is given by:

$$\rho_{fl} = \frac{C}{V_{fl} \cdot (2\pi f_R)^2} - \frac{m_t}{V_{fl}} \tag{6}$$

or

$$\rho_{fl} = K_1 + \frac{K_2}{f_R^2} \tag{7}$$

where K_1 and K_2 are coefficients for the density measurement that are determined during the calibration process. K_1 and K_2 are temperature and may be automatically compensated for by means of integral temperature measurement.

The frequency, f_R, in Eqs. (6) and (7) can be determined by measuring the period of the tube oscillation, T_f, or by counting the number of cycles, N_c, during a time window (gate), t_w:

$$f_R = \frac{1}{T_f} \quad \text{or} \quad f_R = \frac{N_c}{t_w} \tag{8}$$

For some mechanical designs, Eq. (7) can be replaced with a more complex function of f_R.

6.3 Relative Density (Specific Gravity)

Dividing the fluid density under process conditions by the density of pure water under reference conditions results in the relative density, d, under process conditions, as follows:

$$d = \frac{\rho_{fl}}{\rho_{w,ref}} \tag{9}$$

where

ρ_{fl} = the density of fluid under metering conditions
$\rho_{w,ref}$ = the density of water under reference conditions

6.4 Accuracy

For density, accuracy includes the combined effects of linearity, repeatability, and hysteresis. Density accuracy is expressed as an absolute value in mass per unit volume (i.e., pounds/cubic foot, g/cm^3, or kg/m^3).

Accuracy and repeatability statements are usually given for reference conditions, which are specified by the manufacturer.

6.5 Factors Affecting Density Measurement

6.5.1 General. The measurement of density can be influenced by changes in process conditions. In certain applications, these influences may be significant and manufacturers should be able to quantify the effect or give guidance on the likely impact on the performance of the meter.

6.5.2 Temperature. Temperature changes can affect the density calibration factor of the sensor. Compensation for these changes is necessary and is frequently performed in the transmitter. However, due to nonlinearity of the density equation, the effect may not be entirely eliminated. In order to minimize this effect in precision applications, it may be necessary to calibrate at the operating temperature. Large differences in temperature between the oscillating tube(s) and the ambient temperature can cause errors in temperature compensation. The use of insulation materials can minimize these effects.

NOTE: In certain applications (e.g., cryogenic liquids) there may be a transient temperature influence, resulting from a step change in process temperature (thermal shock) that will momentarily influence the density measurement.

6.5.3 Pressure. For some designs and sizes of meters, pressure changes can affect the density calibration factor and compensation may be necessary. (Consult the manufacturer.)

6.5.4 Multiple Phases. The density of liquid mixtures, homogeneous mixtures of solids in liquids, or homogeneous mixtures of liquids with a low volumetric ratio of gas can be measured satisfactorily with Coriolis meters. Consult the manufacturer for design limits. In some circumstances, multiphase applications (particularly gas bubbles in liquids) can cause additional measurement errors and even stop operation. The degree to which bubbles or suspended solids can be tolerated without influencing the density measurement will depend on their distribution in and coupling with the carrier fluid. For example, large pockets of air in water are more troublesome than homogeneously distributed

Copyright ASME International
Provided by IHS under license with ASME
No reproduction or networking permitted without license from IHS
Not for Resale

bubbles in a highly viscous liquid. The suitability of a Coriolis meter for density measurement of a multiphase system will depend on its intended use. The choice of an appropriate meter should only be made after careful consideration and consultation with the manufacturer.

6.5.5 Flow Effect. Density calibration is usually carried out under static conditions (i.e., without any fluid flowing).

Operation on a flowing fluid can influence the density measurement. Fluid velocities that give rise to such an effect will vary depending on the sensor size and design. For precise density measurements at velocities within these ranges, it is advisable to perform the density calibration under flowing conditions. Some manufacturers offer automatic compensation for flow effects on density measurement.

6.5.6 Corrosion, Erosion, and Coating. Corrosion, erosion, and coating may affect the mass and stiffness of the measuring tube. These effects will induce errors in the density measurement. In applications where these effects are likely, care should be taken in specifying suitable materials, selecting the most appropriate meter size (limiting velocity), and where necessary, applying regular cleaning.

6.5.7 Installation. Generally, installation stresses do not influence the density measurement. However, for certain sensor designs, there may be a minor orientation effect. In precision density applications, it may be necessary to calibrate the meter in its intended final orientation or to perform a field adjustment (see para. 6.6.3).

6.6 Calibration and Adjustment

6.6.1 General. Coriolis meters can be calibrated during manufacture and/or by field adjustment. Only single-phase, clean liquids should be used for calibration or adjustment. The measuring tubes should be clean and free of coating or deposits and should be flushed immediately prior to calibration. Deviation from these requirements can result in significant measurement errors.

6.6.2 Manufacturer's Calibration. Coriolis meters are frequently calibrated by the manufacturer for density measurement using air and water as reference fluids. The density calibration factors determined by this procedure are given by the manufacturer, usually noted on the sensor data plate. If a precision density measurement is required, a special calibration may be necessary.

6.6.3 Field Adjustment. The advantage of field adjustment is that it can be performed by the user with the process fluid in the measuring tubes. The user should know the density of the fluid in the meter to an uncertainty of one-third or less than the uncertainty that is required of the meter.

The transmitter may be equipped with facilities to support a field adjustment with the meter filled with one or more liquids.

The procedure necessary to accomplish a field adjustment should be outlined in detail in the instruction manual.

7 VOLUME FLOW MEASUREMENT UNDER METERING CONDITIONS

7.1 General

Coriolis meters directly measure mass flow rate and density under metering conditions. Therefore, they are generally used where measurements of either or both of these parameters are of importance. However, there are applications where the advantages of a Coriolis meter would be very beneficial, but the desired measurement is volume under metering conditions. Coriolis meters can be effectively used for volume flow measurement.

7.2 Volume Calculation

Density is defined as mass per unit volume. Therefore, volume can be calculated from mass and density as follows:

$$V = \frac{m}{\rho} \tag{10}$$

where

V = the volume under metering conditions
m = the mass
ρ = the density under metering conditions

Equation (10) may be incorporated directly into the transmitter software provided the Coriolis meter is of a type that can measure both mass and density (see paras. 5 and 6). Since the mass is measured as a function of time (mass flow rate), the volume calculated is also a function of time:

$$q_V = \frac{q_m}{\rho} \tag{11}$$

where

q_m = the mass flow rate
q_v = the volume flow rate under metering conditions

The Coriolis meter may then provide the volume flow rate calculated from Eq. (11) as an output signal. The calculated volume flow rate may also be integrated with respect to time to obtain the total volume.

Copyright ASME International
Provided by IHS under license with ASME
No reproduction or networking permitted without license from IHS
Not for Resale

NOTE: The calculated volume flow is based on dynamic mass flow and dynamic density measurements made under process conditions. Volume flow in this form will, therefore, also be a dynamic measurement under process conditions rather than reference conditions.

7.3 Accuracy

Some Coriolis meter manufacturers publish their expected accuracy for volume measurement. However, if this information is not available, the expected accuracy for volume flow measurement can be calculated from:

$$\epsilon_V = \sqrt{(\epsilon_m{}^2 + \epsilon_\rho{}^2)} \quad (12)$$

where

ϵ_V = the accuracy of the volume measurement
ϵ_m = the accuracy of the mass measurement (see para. 5.2)
ϵ_ρ = the accuracy of the density measurement (see para. 6.4)

The terms in Eq. (12) must be expressed as a plus-minus percentage (±%) of reading.

7.4 Special Influences

7.4.1 General. Coriolis meters can only give a computed value of the volume, and as such, the reliability can be only as good as the measured data entered into the volume equation. On this basis, any variation in the fluid or in process parameters that influence the reliability of mass flow and density measurements will have a combined effect on the reliability of the calculated volume measurement. For specific effects of variations in process conditions on mass flow and density measurements, see paras. 5 and 6.

7.4.2 Empty Pipe Effect. A Coriolis meter measuring liquid flow will respond to tubes becoming empty or such as when liquid is displaced by vapor. If this were to occur while there was still any indicated mass flow present, the calculation of the liquid volume according to Eq. (10) (see para. 7.2) would be erroneously high. This problem can be avoided by incorporating a suitable low-density cut-off setting, designed to inhibit any flow measurement unless the meter is properly filled with liquid. Consultation with manufacturers may provide alternative methods of eliminating this problem.

7.4.3 Multiphase Fluids. Liquid volumes cannot be measured reliably if there is more than one phase present.

7.5 Factory Calibration

7.5.1 Mass Flow and Density Calibration. Coriolis meters are mass flow and density measuring devices. These two parameters should be calibrated in accordance with the recommendations given in paras. 5 and 6, before the meter can be used for volumetric measurements. Once the meter has been calibrated for mass flow and density, a theoretical prediction of the volume accuracy can be determined using Eq. (12) described in para. 7.3.

7.5.2 Volume Check. The expected value of accuracy for volume measurement may be checked by performing a volumetric or gravimetric test against known standards. In addition to the standard calibration certificate, on request, manufacturers may be able to provide test data showing volume flow rates and corresponding volumetric errors. These errors can be determined using the mass flow calibration data and the precise calibration fluid density. The volume determination can also be checked by means of a field test, which should be performed using the Coriolis meter in its operational installation using the process fluid.

8 ADDITIONAL MEASUREMENTS

8.1 General Considerations for Multi-Component Systems

The density measurement made by a Coriolis meter is a function of the composite density of the process fluid in the tube(s). If the fluid contains two components and the density of each component is known, the mass or volume fraction of each component can be determined.

By combining the (independent) mass flow rate and density (or concentration) measurements, the net mass flow of each component of a two-component mixture can also be calculated. Net flow measurements are limited to two-component systems (e.g., oil and water) and are useful in a wide variety of applications. For example, flow rates of each component of two-component systems such as water-and-oil mixtures, liquid-and-solid slurries, sugar measurements, and other two-component systems can be determined using a Coriolis meter.

In principle, a Coriolis meter will measure the average density of multi-component fluids, including two-phase systems. This is generally true in the case of slurries (solids carried by a liquid). However, measurements of a gas phase in a liquid stream, or conversely, a liquid in a gas stream, can be difficult to make due to structural influences within the sensing element. Consult the manufacturer if two-phase flow is to be measured.

8.2 Immiscible Mixtures

8.2.1 General. An immiscible liquid is a liquid containing two components, which do not mix. The total volume is the sum of the individual volumes under metering conditions.

Copyright ASME International
Provided by IHS under license with ASME
No reproduction or networking permitted without license from IHS

Not for Resale

When two components do not mix, whether they are two immiscible liquids or a liquid and a solid, the relationship between density and concentration can only be defined by Eqs. (13) and (14) given in para. 8.2.2. Examples of these types of mixtures are starch and water, sand and water, and oil and water.

8.2.2 Mass Fraction. Equations (13) and (14) describe the relationship between component A and component B respectively, as a mass fraction w expressed as a percentage.

$$w_A = \frac{\rho_A(\rho_{measured} - \rho_B)}{\rho_{measured}(\rho_A - \rho_B)} \times 100 \quad (13)$$

$$w_B = \frac{\rho_B(\rho_A - \rho_{measured})}{\rho_{measured}(\rho_A - \rho_B)} \times 100 \quad (14)$$

where

w_A = mass fraction of component A in relation to the mixture
w_B = mass fraction of component B in relation to the mixture
ρ_A = density of component A
ρ_B = density of component B
$\rho_{measured}$ = the measured density of the mixture

8.2.3 Volume Fraction. Equations (15) and (16) describe the relationship between component A and component B, as a volume fraction φ expressed as a percentage.

$$\varphi_A = \frac{\rho_{measured} - \rho_B}{\rho_A - \rho_B} \times 100 \quad (15)$$

$$\varphi_B = \frac{\rho_A - \rho_{measured}}{\rho_A - \rho_B} \times 100 \quad (16)$$

where

φ_A = volume fraction of component A in relation to the mixture
φ_B = volume fraction of component B in relation to the mixture

Variables ρ_A, ρ_B, and $\rho_{measured}$ are defined in Eqs. (13) and (14) in para. 8.2.2.

The volume fraction is a simple rearrangement of Eqs. (13) and (14).

8.2.4 Net Mass Flow Rate. By combining the total mass flow rate and the mass fraction measurements, the net mass flow rate of each of two components can be calculated as follows:

$$q_{m,A} = \frac{q_{m,T} \times w_A}{100} \quad (17)$$

$$q_{m,B} = \frac{q_{m,T} \times w_B}{100} \quad (18)$$

where

$q_{m,A}$ = net mass flow rate of component A
$q_{m,B}$ = net mass flow rate of component B
$q_{m,T}$ = the total mass flow rate of the mixture

Variables w_A and w_B are defined in Eqs. (13) and (14) in para. 8.2.2.

8.2.5 Net Volume Flow Rate. By combining the total volume flow rate and volume fraction measurements, the net volume flow rate of each of two components can be calculated as follows.

$$q_{V,A} = \frac{q_{V,T} \times \varphi_A}{100} \quad (19)$$

$$q_{V,B} = \frac{q_{V,T} \times \varphi_B}{100} \quad (20)$$

where

$q_{V,A}$ = the net volume flow rate of component A
$q_{V,B}$ = the net volume flow rate of component B
$q_{V,T}$ = the net total volume flow rate

Variables φ_A and φ_B are defined in Eqs. (15) and (16) in para. 8.2.3.

8.3 Miscible Liquids Containing Chemically Noninteracting Components

A miscible liquid consists of two or more components, which mix completely or dissolve together. The total volume of the liquid may be different from the sum of the individual volumes at metering conditions.

When two liquids are completely miscible, such as alcohol and water, the mass fraction (of either liquid component) versus density is usually read from table values. It is not possible to obtain a general equation that is valid for all miscible liquids due to the nonlinear relationship between mass fraction and density. It is, therefore, necessary to derive an equation for each mixture. See Appendix D.

8.4 Solutions Containing Chemically Interacting Components

The relationship between two soluble liquids that react chemically is complex. See Appendix D.

8.5 Special Considerations for Temperature and Pressure

The previous equations and discussions (as well as those in Appendix D) assume constant temperature and pressure conditions. In any liquid mixture, temperature and to a lesser extent, pressure, will affect the density of each of the two components differently. Therefore, corrections are required. Typically, pressure has a small influence on the density and can be considered negligible, particularly if the pressure is almost constant. Any

Copyright ASME International
Provided by IHS under license with ASME
No reproduction or networking permitted without license from IHS Not for Resale

influence can be characterized by making a calibration. Temperature has a much larger influence, and on-line corrections are necessary.

Coriolis meters provide temperature measurement for material property corrections of the sensing element. The temperature measured is the tube temperature. For precise correction to fluid properties the actual temperature of the fluid is needed. It may be necessary to make a separate temperature measurement of the fluid for these applications.

Copyright ASME International
Provided by IHS under license with ASME
No reproduction or networking permitted without license from IHS

Not for Resale

NONMANDATORY APPENDIX A
FLOW CALIBRATION TECHNIQUES

A1 INTRODUCTION

Calibration involves comparing the output of the meter under test with a suitable standard. There are two levels of calibration, described in detail in para. A2, as follows:

(a) Type 1 standard calibration, the details of which are specified by the manufacturer

(b) Type 2 special calibrations, the details of which are specified by the user

Coriolis meters are calibrated in the same manner as any other flowmeter. Coriolis meters can be calibrated using gravimetric, master meter, and volumetric techniques.

NOTE: Calibration properly refers to the procedure by which the flowmeter is compared to a traceable reference and does not refer to changes to scaling factors, sometimes referred to as "changing the calibration."

A2 CALIBRATION METHODS

A2.1 General Considerations

When calibrating Coriolis meters, collect data from the transmitter output(s), which is (are) independent of any damping settings. A sufficient amount of data should be collected during the test to establish an acceptable calibration uncertainty.

There are three main methods for calibrating flowmeters: gravimetric, volumetric, and by use of a master-meter. In each case, two operational techniques can be used.

(a) steady state flow: data collection starts and stops while the fluid is maintained at a stable flow rate.

(b) batching: data collection starts at zero flow conditions and stops at zero flow conditions. In this case, the run time should be sufficiently long to account for errors induced by flow rate variations at the start and end of the run.

A2.2 Gravimetric Methods

See ASME MFC-9M.

A2.3 Volumetric

The Coriolis meter can be calibrated using an established volumetric method, such as by collecting the test fluid in a certified vessel or by using a volume prover. However, the collected quantity (volume) must be converted into mass by multiplication by the fluid density. The density can be measured dynamically using an online densitometer or, if the fluid density is constant, by sampling methods. If the properties of the fluid are well known, the density can also be determined by measuring the fluid temperature and pressure within the vessel.

A2.4 Master Meter (Reference Meter)

A master meter can also be used to calibrate a Coriolis meter using established methods. The stability and accuracy of the master meter should be fully documented and should provide adequate uncertainty in mass units. If the master meter is a volumetric device, its measurement should be converted to mass using the density. The density can be measured dynamically using an online densitometer or, if the fluid density is constant, using sampling methods. If the equation of state of the fluid is well known, the density can be determined by measuring the fluid temperature and pressure during the test.

A Coriolis master meter may be used to calibrate other Coriolis meters. The calibration of the Coriolis master meter must also be traceable to recognized standards. The same uncertainty ratios are needed for a master meter calibration as for a gravimetric calibration.

Calibration of a meter by using another meter of the same operating principle should be accomplished with caution. Because if the meter performance is affected by any changes in the operating conditions, both the unit being calibrated and the master meter may be affected in the similar manner (bias), which may not be indicated in the meter calibration result.

A2.5 Calibration Frequency

A Coriolis meter should not drift if it is correctly installed and used with clean, noncorrosive, and nonabrasive fluids. The frequency of calibration of the meter is governed by the criticality and nature of the operating conditions. It may be appropriate to reduce or increase the frequency of calibration as data is gathered. For fiscal and/or custody transfer applications, this frequency may be prescribed by regulation, or agreed between the relevant parties, and may be once or twice per year.

If the meter installation conditions vary, for instance as a result of pipe work modification in the vicinity of the meter, it is likely that the meter zero offset will be affected. This can be corrected by conducting a zero adjustment. A zero adjustment is needed if the meter

Copyright ASME International
Provided by IHS under license with ASME
No reproduction or networking permitted without license from IHS
Not for Resale

output at zero flow conditions is greater than the meter zero stability specified by the manufacturer.

A3 CALIBRATION PROCEDURES

The procedures adopted for all meter calibration methods should ensure that

(a) the meter is installed in accordance with manufacturer's recommendations

(b) the meter under test, and the test facility itself, is filled completely with test fluid

(c) the calibration is preceded by an appropriate warm-up period and hydraulic run-in time

(d) all transmitter configuration data is recorded prior to the start of the test

(e) the meter output is monitored at zero flow before and after the test

(f) the test flow rates are selected to cover the operating flow range of the meter when it is in service

(g) the calibration of the reference is current

(h) the uncertainty of the reference should be one-third or less of the desired meter uncertainty

A4 CALIBRATION CONDITIONS

A4.1 Flow Stability

The flow should be kept stable to within ±5% of the selected flow rate for the duration of the calibration test at that flow rate.

A4.2 Zero Adjustment

First, a zero flow condition should be established (and checked) in the calibration stand. If the meter output at zero flow conditions is within the zero stability value specified by the manufacturer, a zero adjustment is not necessary. However, if the output at zero flow conditions is seen to be unsatisfactory, a single zero adjustment should be made only at the start of the calibration and not between runs. It is recommended that the fluid conditions be recorded as part of the zero adjustment.

A4.3 Temperature and Pressure

Variations in fluid temperature and pressure should be minimized during the calibration process. For a single run, the temperature should be held constant to within 1°C (2°F) and to within 5°C (9°F) for the entire duration of the calibration. The fluid pressure within the test rig should be kept sufficiently high to avoid flashing or cavitation in the meter and/or in the vicinity of the meter. Ideally, proving should be performed under the normal operating pressure and temperature conditions of the intended use.

A4.4 Installation

The recommendations outlined in para. 3.3 are also applicable to the meter installation during calibration.

A5 CALIBRATION CERTIFICATE

The following data should be included on a meter calibration certificate:

(a) a unique certificate number, repeated on each page along with the page number and the total number of pages

(b) the certificate date of issue and the test date if it differs from the certificate date of issue

(c) the identity of the party commissioning the calibration

(d) the name and location of the calibration laboratory

(e) the test fluid data such as product name, density, temperature, pressure, etc.

(f) the unique identification of meter under test

(g) the traceability of the calibration facility and its procedures

(h) the uncertainty statement and calculation method

(i) the relevant ambient conditions

(j) the output channel that was used

(k) name of the calibration operator

(l) the configuration data within the transmitter when the calibration is performed

(m) recommended calibration factor

A6 TYPICAL CALIBRATION CERTIFICATE

Data from this form should be available to the user after calibration. A typical calibration certificate is given in Fig. A1.

Copyright ASME International
Provided by IHS under license with ASME
No reproduction or networking permitted without license from IHS Not for Resale

Date of issue: _____ Page ___ of ___

Certificate No.: _____

Date of test: _____

Operator: _____

Authorized signature: _____

Supplier: _____

Sensor: Type number _____
Serial number _____
Sensor calibration factor _____

Transmitter: _____
Type number _____
Serial number _____
Output calibrated: mA—pulsed—density—serial, etc. _____

Test Conditions:
Calibration fluid (product name): _____
Viscosity: at _____ °C
Density: at _____ °C
Temperature of test fluid: _____ °C
Pressure at inlet to test meter: _____ Bar
_____
Facility traceable to: _____
Uncertainty of test facility: _____

Q_m	Percent of Flow Range	Indicated Mass	Mass Reference	Observed Error, %	Specification, %, & Pass or Fail

Flow range: min._____ max._____

Pressure drop at calibration conditions: _____

Other configuration data at which calibration was performed (may be printed on separate sheet, belonging to this certificate)

Fig. A1 Typical Calibration Certificate

Copyright ASME International
Provided by IHS under license with ASME
No reproduction or networking permitted without license from IHS
Not for Resale

NONMANDATORY APPENDIX B
SECONDARY CONTAINMENT OF CORIOLIS METERS

B1 SAFETY GUIDELINES FOR THE SELECTION OF CORIOLIS METERS

B1.1 General Considerations

When the Coriolis meter is used in critical applications, such as in offshore oil and gas production and in the metering of flammable or toxic substances, care should be taken to verify that the integrity of the meter could be maintained up to test pressure over the expected lifetime under true process conditions.

When Coriolis meters are specified for a particular application, special attention should be given to the following specific areas.

B1.2 Materials

Care should be taken to establish that suitable wetted materials are selected for compatibility with the process fluid(s) being metered including cleaning fluids. Material incompatibility is the most common source of Coriolis-tube fracture and can be totally avoided at the sensor selection stage. Standard material guides do not necessarily apply to thin-walled, vibrating tubes. Manufacturers' recommendations should be considered along with standard material guides.

B1.3 Velocity

If the flowing fluid is abrasive, the flow velocity should be limited to ensure that the rate of erosion is within acceptable limits. Thinning of the oscillating tube through erosion can eventually lead to catastrophic failure.

B1.4 Flow Sensor Pressure Rating

To demonstrate conformance for the flow sensor pressure rating, the manufacturer should provide the following information on request:

(a) codes to which the flow sensor was designed

(b) the design calculations and test results, if performed, pertaining to the codes mentioned in subpara. (a) for the wall thickness, pressure ratings, unlisted components, etc.

B1.5 Pressure Testing

Evidence should be available from the manufacturer to confirm that the full-assembled sensor has passed an appropriate pressure test. This evidence should be available in terms of a certificate or a test procedure.

When the above criteria can be fulfilled for any given use, secondary containment should not be necessary.

B2 SECONDARY CONTAINMENT

B2.1 Appropriate Use

While the principles laid down in para. B1 serve as safety guidelines for meter selection, there may be situations where all of the above-mentioned criteria cannot be satisfied. For example, if some concern remains regarding material compatibility due to the unknown nature of the process fluids, which will pass through the meter, then secondary containment may be required. In some cases, the severity of the results of an unforeseen failure to contain the process fluid may, in and of itself, warrant the use of secondary containment. In this case, the following issues should be addressed regarding the integrity of the secondary containment offered.

B2.2 Design Integrity

Evidence should be available from the manufacturer demonstrating that the containment vessel has been designed specifically for the given purpose and in accordance with a recognized standard.

B2.3 Pressure Testing

In addition to the provision of design calculations demonstrating the suitability of a containment vessel, it may be necessary for manufacturers to perform tests on the fully assembled containment vessel. Tests should conform to an established procedure and should be supported by the necessary documentation and test certificates.

B2.4 Selection of Appropriate Secondary-Containment Pressure Ratings

General guidelines for specifying the pressure rating of secondary containment vessels are as follows:

(a) Maximum continuous containment pressure shall be greater than the process relief pressure.

(b) Containment burst pressure shall be greater than plant design pressure.

The secondary containment of a Coriolis meter will only be subjected to pressure under abnormal conditions (tube fracture), which would, from necessity, be for a limited duration and a single occurrence. On this basis, it may be possible to accept a pressure specification for the containment vessel of the Coriolis meter, which is less rigorous than that of the rest of the pipe work. Such compromises should only be made within design and test code requirements and by the written agreement

Copyright ASME International
Provided by IHS under license with ASME
No reproduction or networking permitted without license from IHS
Not for Resale

between the end-user, manufacturer, and appropriate regulatory agencies.

In cases where the process design pressure may be higher than that of the secondary containment pressure, the safety of the Coriolis meter installation can be enhanced by installing a pressure switch in the secondary containment for use as a trip alarm. Alternatively, a bursting disc or relief valve can be used.

--`,``,-`-`,,`,,`,`,,`---

Copyright ASME International
Provided by IHS under license with ASME
No reproduction or networking permitted without license from IHS
Not for Resale

NONMANDATORY APPENDIX C
CORIOLIS METER SPECIFICATIONS

The following is the minimum amount of information to be specified by the manufacturer for a Coriolis meter:

Identification	Manufacturer
	Model number(s)
	Measuring principle
Primary measurements	Mass flow/density/temperature
	Ranges of above
Output signals	Analog
	Pulse
	Digital
	Display
	Discrete
Performance	Accuracy for specified conditions
	Zero stability
	Repeatability
	Operating influences due to temperature
	Operating influences due to pressure
	Operating influences due to gas ratio by volume fraction
	Pressure drop under specified conditions
Operating limits	Density
	Pressure
	Temperature (ambient and process)
	Viscosity
	Flow rate
Mechanical	Tube geometry
	Wetted materials of construction
	Tube dimensions
	Overall dimensions
	Weight
	Process connections
	Special mounting requirements
	Electrical conduit connections
	Secondary containment
Electrical	Power supply requirements
	Maximum cable lengths
Certification	Safety and electrical approvals
	Custody transfer or legal trade approvals
	Secondary containment
	General documentation
	Sanitary use approvals
	CE directive compliance
	Calibration traceability
	Material certificates

Copyright ASME International
Provided by IHS under license with ASME
No reproduction or networking permitted without license from IHS
Not for Resale

NONMANDATORY APPENDIX D
MASS FRACTION MEASUREMENT EXAMPLES

D1 MISCIBLE LIQUIDS CONTAINING CHEMICALLY NONINTERACTING COMPONENTS

D1.1 Relationship Between Density and Mass Fraction

Figure D1 is an example of the relationship between density and mass fraction for two miscible liquids, water and ethanol at 20°C (68°F).

Pure water and pure ethanol have the following densities:

Water: 0.999823 g/cc
Ethanol: 0.78934 g/cc

For example, a density of 0.78934 g/cc is given for a mass fraction of 100% ethanol and a density of 0.999823 g/cc for a mass fraction of 0% ethanol (or 100% water) in Fig. D1. Other intermediate values of density can be determined from the nonlinear curve given in Fig. D1.

D1.2 Mass Fraction

The value of mass fraction, expressed as a percentage, is determined directly from table values or the curve fit of a graph similar to Fig. D1.

D1.3 Volume Fraction

The net volume of two components that are soluble is difficult to quantify in absolute terms. If a volume of component A and a volume of component B are mixed, the resulting volume does not equal the sum of volume A and volume B. This results from a change in the interstitial occupancy of solute molecules in the mixture. In practice, users may need to know the volume fraction before mixing for better volume-flow control.

$$\varphi_A = \frac{\frac{w_A}{\rho_A}}{\frac{w_A}{\rho_A} + \frac{w_B}{\rho_B}} \times 100 \qquad \text{(D1)}$$

where

φ_A = the volume fraction of component A expressed as a percentage

w_A, w_B, ρ_A, and ρ_B are defined in para. 8.2.2.

$$\varphi_B = \frac{\frac{w_B}{\rho_B}}{\frac{w_A}{\rho_A} + \frac{w_B}{\rho_B}} \times 100 \qquad \text{(D2)}$$

D1.4 Net Flow Calculation

Once the mass or volume fractions are known, net mass and volume flow calculations are identical to those given in paras. 8.2.4 and 8.2.5.

D2 SOLUTIONS CONTAINING CHEMICALLY INTERACTING COMPONENTS

D2.1 Relationship Between Density and Mass Fraction

The relationship between two soluble liquids, which chemically interact, is complex. An example is sulfuric acid and water; the acid ionization changes the solution density. As shown in Fig. D2, the relationship between concentration and density is not defined by a simple curve (i.e., a single density value can correlate to two different values of mass fraction). In such cases, it is important for the user to understand the relationship between density and mass fraction and to work within a sufficiently narrow range of mass fraction in order to correlate on a single value curve for density.

D2.2 Mass Fraction

The value of mass fraction, expressed as a percentage, is read directly from table values or the curve fit of a graph similar to Fig. D2.

D2.3 Volume Fraction

The determination of volume fraction, expressed as a percentage, before mixing is calculated in the same manner as that described in para. D1.3.

D2.4 Net Flow Calculation

Once the mass or volume fractions are known, net mass and volume flow calculations are identical to those given in paras. 8.2.4 and 8.2.5.

Copyright ASME International
Provided by IHS under license with ASME
No reproduction or networking permitted without license from IHS
Not for Resale

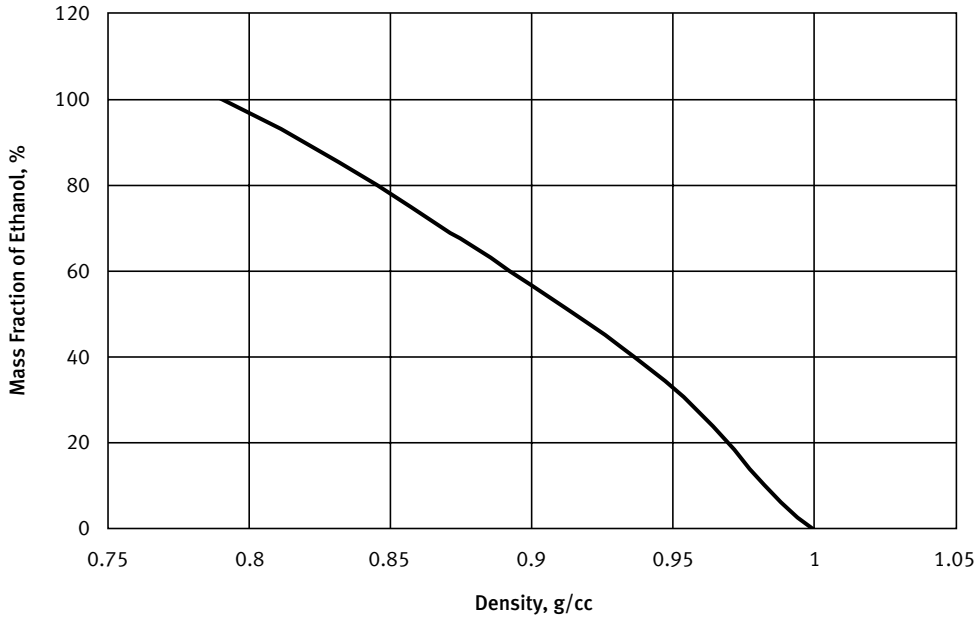

GENERAL NOTE: Data taken from the CRC Handbook.

Fig. D1 Mass Fraction Versus Density Curve for Ethanol and Water

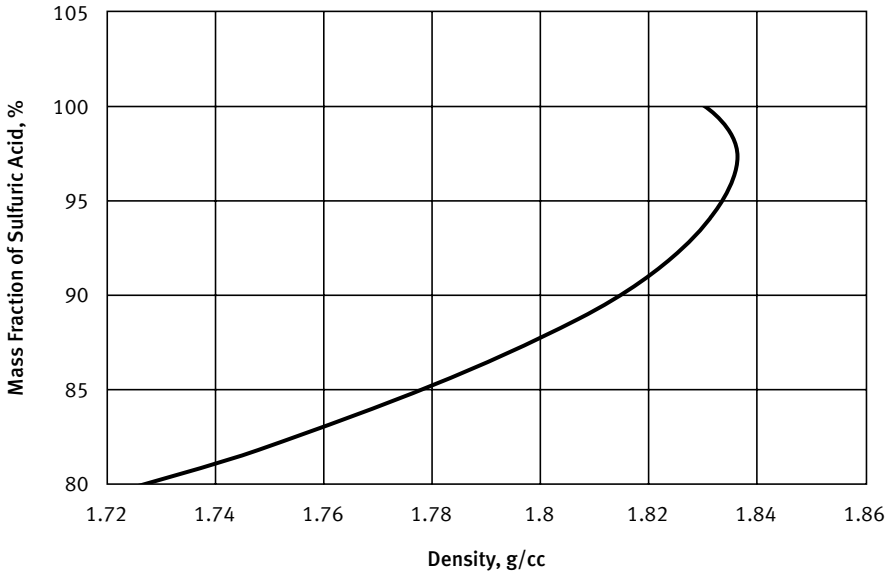

GENERAL NOTE: Data taken from the CRC Handbook.

Fig. D2 Mass Fraction of Sulfuric Acid Versus Density

Copyright ASME International
Provided by IHS under license with ASME
No reproduction or networking permitted without license from IHS
Not for Resale

REFERENCES

The following is a list of publications referenced in this Standard. Unless otherwise specified, the referenced standard(s) shall be the most recent issue at the time of order placement.

ASME B31.3 Process Piping

ASME MFC-1M Glossary of Terms Used in the Measurement of Fluid Flow in Pipes

ASME MFC-2M Measurement Uncertainty for Fluid Flow in Closed Conduits

ASME MFC-7M Measurement of Gas Flow in Pipes Using Critical Flow Venturi Nozzles

ASME MFC-9M Measurement of Liquid Flow in Closed Conduits by Weighing Method

Publisher: The American Society of Mechanical Engineers (ASME International), Three Park Avenue, New York, NY 10016; Order Department: 22 Law Drive, Box 2300, Fairfield, NJ 07007

Handbook of Chemistry and Physics (CRC), CRC Press, ISO, 57th ed., 1976–1977

Publisher: CRC Press, 200 NW Corporate Boulevard, Boca Raton, FL 33431

International Vocabulary of Basic and General Terms in Metrology (VIM), ISO, 2nd ed., 1993

ISO 10790, Measurement of fluid flow in closed conduits — Guidance to the selection, installation and use of Coriolis meters (mass flow, density and volume flow measurements)

Publisher: International Organization for Standardization (ISO), 1 rue de Varembé, Case Postale 56, CH-1211, Genève 20, Switzerland/Suisse

Copyright ASME International
Provided by IHS under license with ASME
No reproduction or networking permitted without license from IHS
Not for Resale

--`,,`,,`-`-`,,`,,`,`,,`---

Copyright ASME International
Provided by IHS under license with ASME
No reproduction or networking permitted without license from IHS
Not for Resale



ISBN 0-7918-2826-3

K12903

Copyright ASME International
Provided by IHS under license with ASME
No reproduction or networking permitted without license from IHS

Not for Resale