The American Society of Mechanical Engineers

PERFORMANCE STANDARD FOR OVERHEAD ELECTRIC WIRE ROPE HOISTS

AN AMERICAN NATIONAL STANDARD

REAFFIRMED 2004

FOR CURRENT COMMITTEE PERSONNEL
PLEASE E-MAIL CS@asme.org

ASME HST-4-1999
[Revision of ASME HST-4M-1991 (R1996)]

Copyright ASME International
Provided by IHS under license with ASME
No reproduction or networking permitted without license from IHS
Not for Resale

The American Society of Mechanical Engineers

AN AMERICAN NATIONAL STANDARD

PERFORMANCE STANDARD FOR OVERHEAD ELECTRIC WIRE ROPE HOISTS

ASME HST-4-1999

[Revision of ASME HST-4M-1991 (R1996)]

Copyright ASME International
Provided by IHS under license with ASME
No reproduction or networking permitted without license from IHS
Not for Resale

Date of Issuance: November 10, 1999

This Standard will be revised when the Society approves the issuance of a new edition. There will be no addenda or written interpretations of the requirements of this Standard issued to this edition.

ASME is the registered trademark of The American Society of Mechanical Engineers.

This code or standard was developed under procedures accredited as meeting the criteria for American National Standards. The Standards Committee that approved the code or standard was balanced to assure that individuals from competent and concerned interests have had an opportunity to participate. The proposed code or standard was made available for public review and comment that provides an opportunity for additional public input from industry, academia, regulatory agencies, and the public-at-large.

ASME does not "approve," "rate," or "endorse" any item, construction, proprietary device, or activity.

ASME does not take any position with respect to the validity of any patent rights asserted in connection with any items mentioned in this document, and does not undertake to insure anyone utilizing a standard against liability for infringement of any applicable letters patent, nor assumes any such liability. Users of a code or standard are expressly advised that determination of the validity of any such patent rights, and the risk of the infringement of such rights, is entirely their own responsibility.

Participation by federal agency representative(s) or person(s) affiliated with industry is not to be interpreted as government or industry endorsement of this code or standard.

ASME accepts responsibility for only those interpretations of this document issued in accordance with the established ASME procedures and policies, which precludes the issuance of interpretations by individuals.

No part of this document may be reproduced in any form,
in an electronic retrieval system or otherwise,
without the prior written permission of the publisher.

The American Society of Mechanical Engineers
Three Park Avenue, New York, NY 10016-5990

Copyright © 1999 by
THE AMERICAN SOCIETY OF MECHANICAL ENGINEERS
All Rights Reserved
Printed in U.S.A.

Copyright ASME International
Provided by IHS under license with ASME
No reproduction or networking permitted without license from IHS

Not for Resale

FOREWORD

This Standard is one in a series that provide performance requirements for hoists and was originally issued in 1985. It was developed by the ASME Standards Committee HST, Hoists — Overhead. It is intended to serve as a guide to manufacturers of the equipment, and to the purchasers and users of the equipment.

Other Standards in this series are:

HST-1 Electric Chain Hoists
HST-2 Hand Chain Manually Operated Chain Hoists
HST-3 Manually Lever Operated Chain Hoists
HST-4 Electric Wire Rope Hoists
HST-5 Air Chain Hoists
HST-6 Air Wire Rope Hoists

This revision adds a new appendix that, in conjunction with ASME HST-4, is intended to replace MIL-H-15317.

Suggestions for improvement of this Standard are welcomed. They should be sent to The American Society of Mechanical Engineers; Attn: Secretary, HST Main Committee; Three Park Avenue, New York, NY 10016-5990.

This Standard was approved as an American National Standard on July 12, 1999.

Copyright ASME International
Provided by IHS under license with ASME
No reproduction or networking permitted without license from IHS
Not for Resale

ASME STANDARDS COMMITTEE HST
Hoists — Overhead

(The following is the roster of the Committee at the time of approval of this Standard.)

OFFICERS

A. R. Toth, *Chair*
C. J. Gomez, *Secretary*

COMMITTEE PERSONNEL

C. J. Gomez, The American Society of Mechanical Engineers
D. A. Merkel, Square D Co.
E. R. Naylor, Campbell Chain
R. R. Reisinger, FKI Industries, Inc.
A. R. Toth, Harnischfeger Industries, Inc.
F. W. Weidner, Naval Sea Systems Command

Copyright ASME International
Provided by IHS under license with ASME
No reproduction or networking permitted without license from IHS
Not for Resale

CONTENTS

Foreword iii
Committee Roster v

1 General 1
1.1 Scope 1
1.2 The Appendices 1
1.3 Reference Standards 1
1.4 Definitions 1

2 Performance 5
2.1 General 5
2.2 Hoist Duty Service Classification 5
2.3 Application Analysis 8
2.4 Specification of Lift, Headroom, and Reach 8
2.5 Hoist and Trolley Speeds 8
2.6 Types of Trolleys 8

3 Mechanical 9
3.1 Design Stresses 9
3.2 Load Blocks 9
3.3 Hooks 9
3.4 Hoisting Rope 9
3.5 Rope Sheaves 10
3.6 Drum 10
3.7 Reeving 10
3.8 Bearings 11
3.9 Hoist Brakes 11
3.10 Brakes for Motor Driven Trolleys 11
3.11 Trolley 11
3.12 Overload Limiting Device 11
3.13 Overtravel Protection 11
3.14 Hand Chain (Hand Chain Operated Trolleys) 11

4 Electrical 12
4.1 General 12
4.2 Motors 12
4.3 Controllers 12
4.4 Control Enclosures 13
4.5 Resistors 13
4.6 Current Conductor Systems 13

Copyright ASME International
Provided by IHS under license with ASME
No reproduction or networking permitted without license from IHS
Not for Resale

5 Testing, Marking, Manuals, Installation, Maintenance, and Operating Procedures 13
5.1 Testing of Hoists 13
5.2 Marking (by Manufacturer) 13
5.3 Manual 14
5.4 Installation (User's Responsibility) 14
5.5 Maintenance and Operating Procedures 14

Figures

1 Hoist Mounting Headroom, Lift, and Reach 3
2 Single and Double Reeving 5
3 Rope Clips 10

Tables

1 Hoist Duty Service Classification 7
2 Typical Hoist and Motorized Trolley Speeds 9
3 Typical Rated Motor Voltages 12

Nonmandatory Appendices

A Performance Requirements for Electric Wire Rope Hoists Used in Marine and Other Applications as Required by the U.S. Department of Defense (DOD) 17
B Examples of Detailed Application Analysis 25

Copyright ASME International
Provided by IHS under license with ASME
No reproduction or networking permitted without license from IHS
Not for Resale

PERFORMANCE STANDARD FOR OVERHEAD ELECTRIC WIRE ROPE HOISTS

1 GENERAL

1.1 Scope

(a) This Standard establishes performance requirements for electric wire rope hoists for vertical lifting service involving material handling of freely suspended (unguided) loads using wire rope with one of the following types of suspension:

(1) lug;

(2) hook;

(3) trolley;

(4) base or deck mounted (does not include base mounted drum hoists of the type covered by ASME B30.7);

(5) wall or ceiling mounted (does not include base mounted drum hoists of the type covered by ASME B30.7).

(b) This Standard is applicable to hoists manufactured after the date on which this Standard is issued. This Standard is not applicable to:

(1) damaged or malfunctioning hoists;

(2) hoists that have been misused or abused;

(3) hoists that have been altered without authorization of the manufacturer or a qualified person;

(4) hoists used for the purpose of drawing both the load and the hoist up or down the hoist's own wire rope;

(5) hoists used for marine and other applications as required by the Department of Defense (DOD).

1.2 The Appendices

Nonmandatory Appendix A, Performance Requirements for Electric Wire Rope Hoists Used in Marine and Other Applications as Required by the U.S. Department of Defense (DOD), applies to the performance requirements for hoists used in marine and other applications. The requirements stated in Appendix A are in addition to the requirements of ASME HST-4-1999 and must be separately invoked.

Nonmandatory Appendix B, Examples of Detailed Application Analysis, includes examples of hoist applications as an aid to users in making the selection of the proper hoist for the application.

1.3 Reference Standards

The following documents form a part of this Standard to the extent specified herein. The latest issue shall apply.

ANSI/NEMA Z535.4, Product Safety Signs and Labels
ANSI/NEMA MG1, Motors and Generators
ANSI/NEMA ICS-1, General Standards for Industrial Control and Systems
ANSI/NEMA 250, Enclosures for Electrical Equipment

Publisher: National Electrical Manufacturers Association (NEMA), 1300 North 17th Street, Rosslyn, VA 22209

ANSI/NFPA 70, National Electrical Code

Publisher: National Fire Protection Association (NFPA), 1 Batterymarch Park, Quincy, MA 02269-9101

ASME B30.7, Base Mounted Hoists
ASME B30.9, Slings
ASME B30.10, Hooks
ASME B30.11, Monorails and Underhung Cranes
ASME B30.16, Overhead Hoists (Underhung)
ASME B30.17, Overhead and Gantry Cranes (Top Running Bridge, Single Girder, and Underhung Hoist)

Publisher: The American Society of Mechanical Engineers (ASME), Three Park Avenue, New York, NY 10016-5990; Order Department: 22 Law Drive, Box 2900, Fairfield, NJ 07007-2900

1.4 Definitions

abnormal operating conditions: environmental conditions which are unfavorable, harmful, or detrimental to or for the operation of a hoist, such as excessively high or low ambient temperatures, exposure to weather, corrosive fumes, dust laden or moisture laden atmospheres, and hazardous locations.

ambient temperature: the temperature of the atmosphere surrounding the hoist.

base or deck mounted: a type of mounting where the hoist is mounted to the top side of a horizontal supporting surface.

beam: an overhead standard structural or specially fabricated shape on which the trolley operates.

Copyright ASME International
Provided by IHS under license with ASME
No reproduction or networking permitted without license from IHS
Not for Resale

brake: a device, other than a motor, used for retarding or stopping hoist or trolley motion by friction or power means.

ceiling mounted: a type of hoist mounting where the hoist is mounted to the underside of a horizontal supporting surface.

Class 1 locations: locations in which flammable gases or vapors are or may be present in the air in quantities sufficient to produce explosive or ignitable mixtures.

Class 2 locations: locations which are hazardous because of the presence of combustible dust.

Class 3 locations: locations which are hazardous because of the presence of easily ignitable fibers or flyings, but in which such fibers or flyings are not likely to be in suspension in the air in quantities sufficient to produce ignitable mixtures.

contactor: an electromechanical device for opening and closing an electric power circuit.

control actuator: a manual means at the operating station by which hoist controls are energized.

control braking means: a method of controlling speed by removing energy from the moving body or by imparting energy in the opposite direction.

control enclosure: the housing containing the electrical control components.

countertorque: a method of controlling speed by applying a variable motor torque in the direction opposite to the direction that the motor is rotating due to being overhauled by the load.

cushioned start: an electrical or mechanical method for reducing the rate of acceleration of trolley motion.

dynamic: a method of controlling speed by using the motor as a generator, with the energy being dissipated by resistance.

eddy current: a method of controlling or reducing speed by means of an electrical induction load brake.

hand chain: the chain provided to control movement of a hand chain operated trolley.

hazardous (classified) locations: locations where fire or explosion hazards may exist. Locations are classified depending on the properties of the flammable vapors, liquids or gases, or combustible dusts or fibers which may be present and the likelihood that a flammable or combustible concentration or quantity is present. (Refer to National Electrical Code, ANSI/NFPA 70)

headroom: headroom is measured with the load hook at its upper limit of travel and is the distance from the saddle of the load hook to the following locations (see Fig. 1):

(a) centerline of the suspension holes on lug suspended hoists [see Fig. 1, sketch (a)];

(b) saddle of the top hook on hook suspended hoists [see Fig. 1, sketch (b)];

(c) bottom of the beam on trolley suspended hoists [see Fig. 1, sketch (c)];

(d) supporting surface on base and deck mounted hoists [see Fig. 1, sketch (d)];

(e) uppermost point of hoist on wall and ceiling mounted hoists [see Fig. 1, sketches (e) and (f)].

hoist: a suspended machinery unit which is used for lifting or lowering a freely suspended (unguided) load.

hoist speed: the rate of motion that the load hook attains while lifting rated load.

holding brake: a friction brake for a hoist which is automatically applied and prevents motion when power is off.

hook, latch type: a type of hook with a mechanical device to bridge the throat opening of the hook.

hook, suspended: suspension of hoist from a trolley or rigid structure by means of a hook(s) at top of hoist.

lateral hook travel: the lateral movement of the load hook between its position at the upper limit of travel and its position at the lower limit of travel.

lift: the maximum vertical distance through which the load hook can travel, and the total allowable hook movement between its upper limit of travel and its position when at the lower limit of travel (see Fig. 1).

lift limiting device: an electrical, mechanical, or electromechanical device for limiting the upward or downward travel of the load hook at the extremities of lift. This device may limit lift at any point within the extremities of lift, if designed to be adjustable.

lifting devices: devices that are not normally reeved onto the hoist ropes such as hook-on buckets, magnets, grabs, and other supplemental devices used for handling certain types of loads. The weight of these devices is to be considered part of the load to be lifted.

load: the total imposed weight on the load block or load hook including lifting devices.

load block: the assembly of hook or shackle, swivel, bearing, pins, sheaves, and frame suspended by the

Copyright ASME International
Provided by IHS under license with ASME
No reproduction or networking permitted without license from IHS
Not for Resale

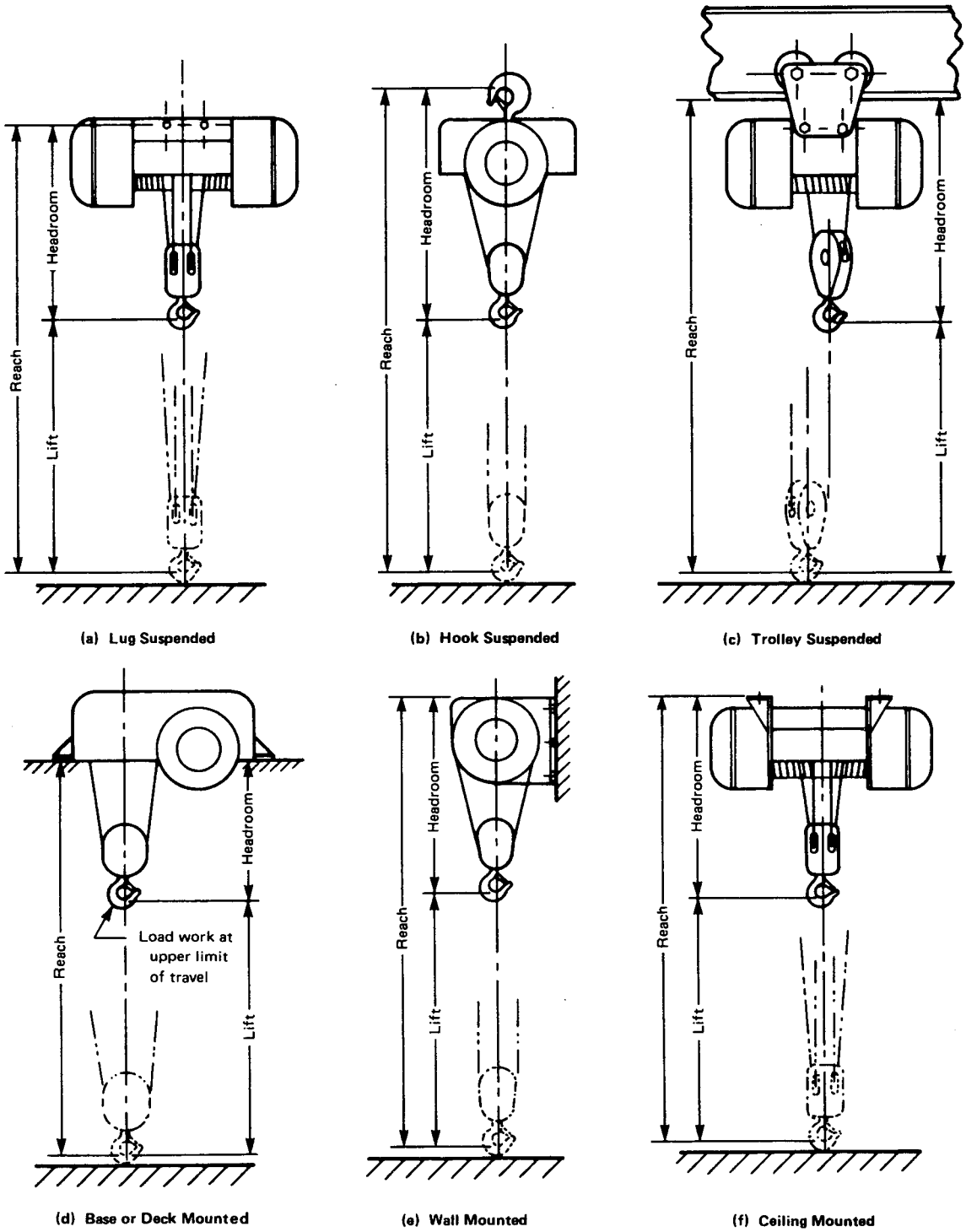

GENERAL NOTE:
Illustrations shown are not intended to confine the use of single or double reeving. Each of the mountings may be used with either type of reeving.

FIG. 1 HOIST MOUNTING HEADROOM, LIFT, AND REACH

Copyright ASME International
Provided by IHS under license with ASME
No reproduction or networking permitted without license from IHS
Not for Resale

rope. This shall include all appurtenances reeved into the rope.

load hook: the hook used to connect the load to the hoist.

load suspension parts: the load suspension parts are the means of suspension (trolley, hook, or lug), the structure or housing that supports the drum, the rope, the sheaves, and the load block.

lug suspended: a hoist suspended from a trolley or permanent structure by means of bolt(s) or pin(s) through a rigid or swivel type lug.

magnetic control: a means of controlling the direction and speed of the hoist and trolley by using magnetic contactors and relays.

mechanical braking means: a method of controlling or reducing speed by friction.

mechanical load brake: an automatic type of friction brake used for controlling loads in a lowering direction. This unidirectional device requires torque from the motor to lower a load but does not impose additional load on the motor when lifting a load.

minimum radius: the smallest radius of the beam, measured to the centerline of the web of the beam, on which the trolley will operate.

normal operating conditions: conditions during which a hoist is performing functions within the scope of the original design.

overload: any load greater than the rated load.

parts (lines): number of lines of rope supporting the load block or hook.

pendant station: electrical controls suspended from the hoist for operating the unit.

pitch diameter: the distance from center to center of a rope passing over a sheave or wound on a drum, measured across the diameter of the sheave or drum.

power transmission parts: the power transmission parts of the hoist are the machinery components, including the gears, shafts, clutches, couplings, bearings, motors, and brakes.

qualified person: a person who, by possession of a recognized degree or certificate of professional standing or who by extensive knowledge, training, and experience has successfully demonstrated the ability to solve or resolve problems relating to the subject matter and work.

rated load: the maximum load for which a hoist or trolley is designated by the manufacturer.

reach: the distance from the saddle of the load hook at its lower limit of lift to the upper point of the headroom measurement. Reach is equal to lift plus headroom (see Fig. 1).

reeving: the reeving of the hoist is the path of the rope between the hoist and the load block.

double reeving: two parts of line leading off of the drum (see Fig. 2).

single reeving: one part of the line leading off of the drum (see Fig. 2).

regenerative braking means: a method of controlling speed in which the electrical energy generated by the motor is fed back into the power system.

rope: refers to wire rope unless otherwise specified.

NOTE: Rope properties do not conform to those shown in ASME B30.9.

rope drum: the cylindrical member around which the rope is wound for lifting and lowering the load.

rope sheave: a grooved wheel used with a rope to change direction and point of application of a pulling force.

running sheave: a sheave that rotates as the hook is lifted or lowered.

shall: use of the word shall indicates that adherence to the particular requirement is necessary in order to conform to the Standard.

sheave, nonrunning: a sheave used to equalize tension in opposite parts of the rope. Because of its slight movement, it is not termed a running sheave.

should: use of the word *should* indicates that the rule is a recommendation, the advisability of which depends on the facts of each situation.

single speed magnetic control: a type of control providing one speed.

stop-start (off-on, power off-power on) control function: a control function used to close and open a mainline contactor, that provides or removes line power to or from all other function contactors. Normally, the control function does not remove power from the control circuit or pendant station.

switch: a device for making, breaking, or for changing the connections in an electric circuit.

Copyright ASME International
Provided by IHS under license with ASME
No reproduction or networking permitted without license from IHS
Not for Resale

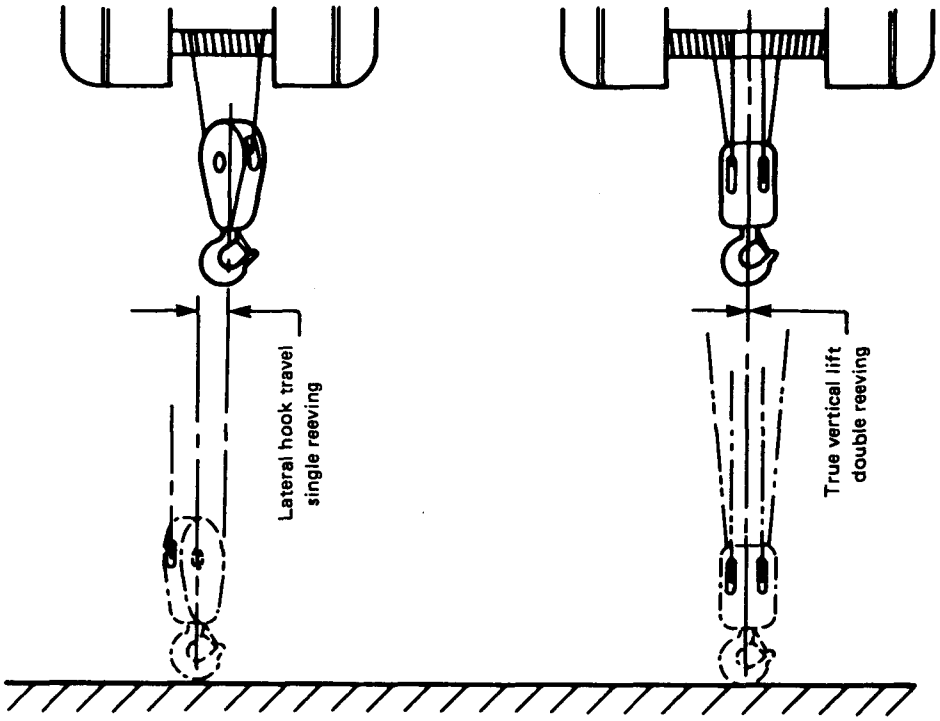

FIG. 2 SINGLE AND DOUBLE REEVING

trolley: a wheeled mechanism from which a hoist is suspended to provide horizontal motion of the hoist along a beam.

trolley speed: trolley speed is the rate of motion that a motor operated trolley (and hoist) attains while traveling along a beam.

trolley suspended: suspension of hoist from a trolley. Hoist can be connected to trolley by hook, clevis, or lug suspension, or the hoist can be integral with trolley.

true vertical lift: in true vertical lift, the load hook travels in a true vertical path between the lower limit of lift and the upper limit of lift

two speed control: a type of control providing two speeds, the lower speed usually is some fraction such as $\frac{1}{2}$ or $\frac{1}{3}$ of the higher speed.

variable speed control: a type of control with three or more control positions.

wall mounted: a type of hoist mounting in which the hoist is mounted to a vertical surface.

2 PERFORMANCE

2.1 General

All equipment selected in accordance with this Standard is designed to perform satisfactorily when installed in accordance with para. 5.4 and used in accordance with para. 5.5 and used within the rated load and hoist duty service classification. All equipment shall provide speeds, lifts, and headroom in accordance with the manufacturer's specifications or to specifications agreed upon by the manufacturer and user.

2.2 Hoist Duty Service Classification

2.2.1 General Considerations. Service conditions have an important influence on the performance of wearing parts of a hoist such as gears, bearings,

Copyright ASME International
Provided by IHS under license with ASME
No reproduction or networking permitted without license from IHS
Not for Resale

rope, sheaves, electrical equipment, brake linings, load and lift limit devices, wheels, etc.

Careful consideration of the hoist duty service classifications described in this section will enable the user to evaluate the application, and to obtain a hoist designed for optimum performance and minimum maintenance. If doubt exists regarding hoist selection, the hoist supplier should be consulted. Many factors enter into the selection of the proper hoist to perform a given function. Hoisting equipment consists of both mechanical and electrical components and both must be considered when analyzing the service the hoist must perform.

The factors that influence the mechanical and electrical performance of any hoist include:

(a) Load Distribution. The actual distribution or proportion of full and partial loads to be handled by the equipment, including lifting devices, has an important effect on the life of power transmission components. For example, ball bearing life generally varies inversely according to the cube of the load. A 2 ton hoist, operated at a mean effective load of 1 ton will have a ball bearing life eight times that of the same hoist used steadily at its rated load.

(b) Operational Time. Operational time is the total running time of the hoist per hour or per work period.

(c) Work Distribution. This is determined by whether the operational time is uniformly distributed over the work period or concentrated in a short time span. Work distribution generally does not appreciably affect mechanical wear but does materially affect the electrical components such as motors, brakes, and controls. For example, a hoist motor designed to operate 15 min out of each hour of an 8 hr shift cannot handle 2 hr of steady run and 6 hr of idle time even though either condition only requires 2 hr of operational time per 8 hr shift.

(d) Number of Starts and Stops. This directly affects all electromechanical devices, such as motors, contactors, brakes, and solenoids.

(e) Repetitive Long Lowering Operations. Such operations generate heat in control braking means.

(f) Environmental Conditions. Such conditions are high ambient temperatures, dust, moisture, corrosive fumes, etc. Hoist equipment is designed to operate in ambient temperatures between 0°F and 104°F (−18°C and 40°C) and in atmospheres reasonably free from dust, moisture, and corrosive fumes unless otherwise specified.

(g) Hazardous Locations. When hoists are used in hazardous locations as defined by ANSI/NFPA 70, or other special codes, modifications, or additional precautions not covered by this Standard may be required. In these locations, only hoists designed in a manner suitable for the conditions encountered shall be used.

2.2.2 Duty Classification. While all the factors listed in para. 2.2.1 must be considered in selecting the proper class of hoist, most industrial applications, having randomly distributed loads or uniform loads up to 65% of rated load handled periodically throughout the work period, can be generalized according to the type of workshop or area of application. Listed in Col. 1 of Table 1 are the five duty classes which have been established for electric wire rope hoists. In Col. 2 are listed typical areas of application where each class can normally be applied.

The majority of hoist applications fall into one of the three categories H1, H2, or H3 and the use of the generalized description in Col. 2 of Table 1 for selection of the hoist will be adequate.

(a) Operational Time Ratings. If in doubt as to the required duty classification for an application, refer to the data in Cols. 3 through 6 of Table 1 that show the operational time ratings for each class.

(1) Uniformly Distributed Work Periods

(a) Maximum On Time, min/hr. The maximum running time in minutes per hour permitted for the duty class when hoist utilization is uniformly distributed for over a given work period (Col. 3).

(b) Maximum Number of Starts Per Hour. The maximum number of motor starts per hour permitted for the duty class when hoist utilization is uniformly distributed over a given work period. For two speed motors, the total number of starts is the sum of the starts made at each motor speed (Col. 4).

(2) Infrequent Work Periods

(a) Maximum On Time From Cold Start in Minutes. The maximum total running time for hoist utilization for the duty class starting with hoist at ambient temperature. These values cover infrequent periods of extended use and are applicable only with hoist at ambient temperature and cannot be repeated unless hoist is allowed to cool down to ambient temperature between periods (Col. 5).

(b) Maximum Number of Starts. The maximum total number of motor starts permitted for infrequent work periods specified in Col. 5. For two speed motors, the total number of starts is the sum of the starts made at each motor speed (Col. 6).

(b) Mean Effective Load. Mean effective load denotes a theoretical single load value which has the same

Copyright ASME International
Provided by IHS under license with ASME
No reproduction or networking permitted without license from IHS
Not for Resale

TABLE 1 HOIST DUTY SERVICE CLASSIFICATION

Hoist Duty Class (Col. 1)	Typical Areas of Application (Col. 2)	Operational Time Ratings at $K = 0.65$			
		Uniformly Distributed Work Periods		Infrequent Work Periods	
		Max. On Time, min/hr (Col. 3)	Max. No. Starts/hr (Col. 4)	Max. On Time From Cold Start, min (Col. 5)	Max. No. of Starts (Col. 6)
H1	Powerhouse and utilities, infrequent handling. Hoists used primarily to install and service heavy equipment, where loads frequently approach rated load, and where the hoist is idle for 1 to 6 month periods between periods of operation.	7.5 (12.5%)	75	15	100
H2	Light machine shop, fabricating service, and maintenance. Loads and utilization randomly distributed. Rated loads infrequently handled. Total running time not over 12.5% of the work period.	7.5 (12.5%)	75	15	100
H3	General machine shop, fabricating, assembly, storage, and warehousing. Loads and utilization randomly distributed. Total running time not over 25% of the work period.	15 (25%)	150	30	200
H4	High volume handling of heavy loads, frequently near rated load in steel warehousing, machine and fabricating shops, mills, and foundries, with total running time not over 50% of the work period. Manual or automatic cycling operations of lighter loads with rated loads infrequently handled such as in heat treating and plating operations, with total running time frequently 50% of the work period.	30 (50%)	300	30	300
H5	Bulk handling of material in combination with buckets, magnets, or other heavy attachments. Equipment often cab operated. Duty cycles approaching continuous operation are frequently necessary. User must specify exact details of operation, including weight of attachments.	60 (100%)	600	N/A [Note (1)]	N/A [Note (1)]

Note:
(1) N/A = Not applicable since there are no infrequent work periods in Class H5 service.

effect on the hoist as various loads actually applied to the hoist over a period of time.

K is the mean effective load factor and is expressed as:

$$K = \sqrt[3]{W_1^3 P_1 + W_2^3 P_2 + W_3^3 P_3 + \ldots + W_{rl}^3 P_n}$$

where:

K = mean effective load factor. Mean effective load factor is the ratio of the mean effective load to the rated load.

W = load magnitude. Load magnitude is the ratio of the hoist operating load to the hoist rated load. Operation with no load shall be included along with the weight of any dead load such as lifting attachments or devices.

P = load probability. Load probability is the ratio for the running time under each load magnitude condition to the hoist total running time. The sum total of all load probabilities used in the above equation shall equal 1.0.

(c) Randomly Distributed Loads. Randomly distributed implies that loads applied to the hoist are assumed to be evenly distributed within the rated load of the hoist in decreasing steps of 20% of the previous load value. Random loads are, therefore, considered as 100, 80, 64, 51, 41, 33, 26, etc., % of rated load.

Copyright ASME International
Provided by IHS under license with ASME
No reproduction or networking permitted without license from IHS Not for Resale

Operation with random loads is considered on an equal time basis for the operating time remaining after accounting for the time the hoist is operating at no load and rated load. Randomly distributed loads will result in a mean effective load factor of 0.65.

2.3 Application Analysis

2.3.1 General

(a) If the operation consists of lowering loads over long distances of more than 50 ft (15 m), the mechanical load brake heat dissipation capability (overheating) may become a factor. Consult manufacturer with particulars.

(b) Motor heating generated by the number of starts is not appreciably affected by the load on the hook and, therefore, the limits imposed by Cols. 3 through 6 are applicable for the motor regardless of the load being handled.

2.3.2 Fundamental Application Analysis. It is not necessary to perform a detailed application analysis or calculate the mean effective load factor if all of the conditions listed below are met.

(a) The hoist is operating at no load during one-half of its operating time (load probability equals 0.5).

(b) The hoist is operating with rated load for a period of time not exceeding 20% of its operating time (load probability equal to or less than 0.2).

(c) Other loads applied to the hoist during the remainder of its operating time are randomly distributed.

Conditions in which the above operating criteria are met will result in a mean effective load factor of 0.65 or less. If any one of these conditions cannot be met or if a below-the-hook lifting device is attached to the load hook, a detailed application analysis using a calculated mean effective load factor should be conducted. Refer to para. 2.3.3.

2.3.3 Detailed Application Analysis. The following general method may be used to make a detailed application analysis. Several examples of this detailed analysis method are given in Appendix B.

(a) Select a hoist class from Table 1 based on the general descriptions given in Col. 2.

(b) Select a hoist with a rated load equal to or somewhat greater than the maximum load to be lifted.

(c) Using the information in Cols. 3 through 6, select the hoist speed which will meet the operational time ratings for the hoist duty class.

(d) Determine the value of K. If K is greater than 0.65, select a hoist of a higher rated load and recalculate K to make sure it is less than 0.65.

(e) Contact the manufacturer if the value of K exceeds 0.65 and the operational time required exceeds the values listed in Table 1.

2.4 Specification of Lift, Headroom, and Reach

2.4.1 Lift. Lift should be specified for the application.

2.4.2 Headroom. Headroom should be specified if important to the application.

2.4.3 Reach. Reach should be specified if important to the application.

2.5 Hoist and Trolley Speeds

Hoist and trolley speeds should be determined by an analysis of the number and length of cycles required for the work period.

Table 2 lists typical speed ranges for hoists and trolleys which are commonly available from most hoist manufacturers. Actual speeds may vary ±10% from the specified rating.

NOTE: Table 2 is to be used as a guide only and is not intended to restrict either the manufacturer or buyer from offering or specifying speeds outside the ranges shown, nor should it be inferred that speeds above or below the ranges shown are not compatible with the required class of hoist.

Accurate load spotting applications for a hoist or trolley may require reduced speed or multiple speed control. Refer to para. 4.3.

2.6 Types of Trolleys

Hoist trolleys are available in plain, hand chain operated, and motor driven types. Selection of each type depends upon the application.

2.6.1 Plain Type. This type is recommended where trolley motion is infrequent or relatively short. Due to the force required to manually operate this type of trolley, it is also recommended that the use of plain trolleys be limited to a maximum load of 3 ton or 3,000 kg with the elevation of the beam not more than 20 ft (6 m) above the operator's floor level.

2.6.2 Hand Chain Operated. This type is recommended where trolley motion is relatively infrequent or short and especially for those loads and beam heights where a plain type trolley would be impractical. The hand chain operated trolley provides good load spotting

Copyright ASME International
Provided by IHS under license with ASME
No reproduction or networking permitted without license from IHS
Not for Resale

TABLE 2 TYPICAL HOIST AND MOTORIZED TROLLEY SPEEDS

Rated Load Tons (kg) [Note (1)]	Hoist Speed ft/min (m/min)	Motorized Trolley Speed, ft/min (m/min)
½ (454)	10–60 (3–18)	30–100 (9–30)
1 (909)	10–60 (3–18)	
2 (1818)	10–40 (3–12)	
3 (2727)	10–35 (3–10.5)	
5 (4545)	10–35 (3–10.5)	
7½ (6817)	10–35 (3–10.5)	
10 (9090)	10–30 (3–9)	
15 (13 634)	10–25 (3–7.5)	
20 (18 180)	10–20 (3–6)	
25 (22 725)	10–15 (3–4.5)	

GENERAL NOTE: Single line hoist speeds excluded.
NOTE:
(1) Tons of 2000 lb.

ability obtained by pulling on the hand chain which is connected to trolley wheels through gears or sprockets.

2.6.3 Motor Operated. This type is recommended where the operating frequency, distance of travel, rated load, beam elevation, or type of load being handled exceed recommendations for the use of plain or hand chain operated trolleys.

The design of motor operated trolleys shall be based on intermittent operation on a straight beam, unless otherwise specified. Where trolley travel involves a curved beam, beam switches, exceptionally long runs, or near continuous operation, special design may be required. Full particulars should be provided with the inquiry.

A cushioned start or multispeed drive is recommended for trolley speeds above 100 ft/min (30 m/min) or for use on beams with curved sections.

3 MECHANICAL

3.1 Design Stresses

(a) The hoist and the means of suspension supplied with the hoist shall be designed to withstand all stresses imposed under normal operating conditions while handling loads within the rated load.

(b) Load suspension parts shall be designed so that the static stress calculated for the rated load shall not exceed 20% of the average ultimate material strength. Elements specifically provided to give a visible warning of severe overload by structural deformation shall be designed so that the static stress calculated for the rated load shall not exceed 35% of the average ultimate strength.

(c) Power transmission parts shall be designed so that the dynamic stresses calculated for the rated load shall not exceed the fatigue and endurance limit established by the manufacturer.

Modifications to upgrade or rerate hoist equipment shall be as authorized only by the original equipment manufacturer. If it is impossible or impractical to contact the manufacturer, the work shall be authorized by a qualified person. After such modifications are made, the hoist shall be tested in accordance with ASME B30.16.

3.2 Load Blocks

Load blocks shall be of the enclosed type and shall be guarded against rope jamming during normal operating conditions.

3.3 Hooks

(a) If the hooks are of the swiveling type, they should be free to rotate. Load block hooks should be capable of rotating through 360 deg when supporting the rated load.

(b) Hooks shall be equipped with latches, unless the application makes use of the latch impractical. When required, a latch shall be provided to bridge the throat opening of the hook for the purpose of retaining slings, chains, etc., under slack conditions.

3.4 Hoisting Rope

(a) The hoisting rope shall be of a recommended construction for hoist service. The rated load divided by the number of parts of the rope shall not exceed 20% of the nominal breaking strength of the rope. When wire rope and rope core may be exposed to an

Copyright ASME International
Provided by IHS under license with ASME
No reproduction or networking permitted without license from IHS
Not for Resale

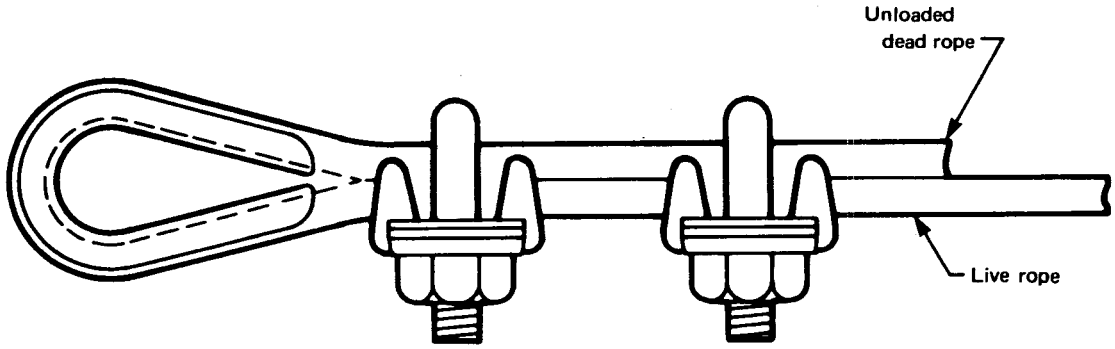

FIG. 3 ROPE CLIPS

environmental condition under which rope or core could be damaged, a rope and core having resistance to the conditions shall be used.

(b) The rope ends shall be attached to the hoist in a manner preventing disengagement through rated hook travel.

(c) Socketing shall be done in the manner specified by the manufacturer of the rope assembly or the rope manufacturer.

(d) Rope clips attached with U-bolts shall have the U-bolts on the dead end of the rope. Spacing and the number of all types of clips shall be in accordance with the clip or rope manufacturer's or hoist manufacturer's recommendations. Nuts on clip bolts shall be tightened evenly to the manufacturer's recommended torque. After the initial load is applied to newly installed rope and the rope is under tension, the nuts on the clip bolts should be tightened again to the required torque in order to compensate for any decrease in rope diameter caused by the load (see Fig. 3).

(e) If the load on the load block is supported by more than one part of rope, the tension in the parts shall be equalized.

3.5 Rope Sheaves

(a) Sheave grooves shall be smooth and free from surface irregularities that could cause rope damage. The cross-sectional radius of the groove should form a close-fitting saddle for the size of the rope used and the sides of the grooves should be tapered outwardly to assist entrance of the rope into the groove. Flange corners should be rounded and rims should run true around the axis of rotation.

(b) Sheaves shall be so mounted as to be guarded against rope jamming under normal operating conditions.

(c) All running sheave bearings except lifetime lubricated bearings should be equipped with means for lubrication.

(d) The pitch diameter of running sheaves should not be less than 16 times the rope diameter.

(e) The pitch diameter of nonrunning sheaves should not be less than 12 times the rope diameter.

3.6 Drum

(a) Rope drums shall be grooved except when the hoist is provided by the manufacturer for a special application. This requirement does not preclude the use of multiple layer spooling.

(b) The grooves shall be free from surface defects which could cause rope damage.

(c) The cross-sectional radius at the bottom of the groove should be such as to form a close-fitting saddle for the size of rope used.

(d) The pitch diameter of the drum should not be less than 18 times the diameter of the rope used.

(e) No less than two wraps of rope shall remain on each anchorage of the hoist drum when the hook is at its lower limit of travel as determined by rated lift unless a lower limit device is provided in which case no less than one wrap shall remain on each anchorage of the hoist drum.

3.7 Reeving

Hoist reeving may be either single or double and may be one part or multiple parts.

3.7.1 Single Reeving. On single reeved hoists, one end of the rope is attached to the drum. Continuous drum grooving runs in one direction. The load block moves laterally in the direction of the axis of the drum

Copyright ASME International
Provided by IHS under license with ASME
No reproduction or networking permitted without license from IHS
Not for Resale

as the rope winds onto or off of the drum. Refer to Fig. 2.

3.7.2 Double Reeving. On double reeved hoists, both ends of the rope are attached to the drum. The drum is grooved with left and right hand grooves beginning at both ends of the drum, then grooving toward the center of the drum. The load block will follow a true vertical path (true vertical lift) as the ropes wind toward or away from each other onto or off of the drum. Refer to Fig. 2.

3.8 Bearings

Bearings shall be selected to give a minimum B-10 life expectancy based on full rated speed as follows:

Class	Min. Life Expectancy, hr
Class H1	1,250
Class H2	2,500
Class H3	5,000
Class H4	10,000
Class H5	20,000

Bearing loads, for life computation purposes, will be determined using a mean effective load factor of 0.65.

3.9 Hoist Brakes

(a) The braking system shall consist of a brake and a control braking means and shall perform the following functions under normal operating conditions with rated load, and under test conditions with test loads up to 125% of the rated load:

(1) stop and hold the load when controls are released;

(2) control the load during lowering to a maximum speed of 120% of the rated lowering speed for the load being handled; and

(3) stop and hold the load in the event of a complete power failure.

(b) The braking system shall have heat dissipation capability for the frequency of operation required by the hoist duty service classification.

(c) The braking system shall have provision for adjustments where necessary to compensate for wear.

3.10 Brakes for Motor Driven Trolleys

Brakes, when specified, should be actuated by mechanical or electrical means and shall have the following characteristics.

(a) Brakes shall have sufficient capacity to stop the trolley within a distance in feet (meters) equal to 10% of the rated speed in feet (meters) per minute when traveling at rated speed with rated load.

(b) Brakes shall have heat dissipation capability for the frequency of operation as defined by the user.

(c) Brakes shall have provision for adjustment where necessary to compensate for wear.

3.11 Trolley

When a trolley is required for use with a hoist, the type and size of support beam must be specified to ensure that the trolley is suitable for the minimum radius and the contour of the beam.

3.12 Overload Limiting Device

An overload limiting device, when furnished, shall be designed to permit operation of the hoist within its rated load and to limit the amount of overload that can be lifted by a properly maintained hoist, under normal operating conditions.

The overload limiting device may allow the lifting of an overload, but shall be designed to prevent the lifting of an overload that could cause damage to the hoist. This does not imply that any overload is to be intentionally applied to the hoist.

The overload limiting device is an emergency device and shall not be used to measure the maximum load to be lifted and shall not be used to sense the overload imposed by a constrained load.

3.13 Overtravel Protection

A lift limiting device shall be provided so that the load hook, either loaded or empty, shall not exceed the upper limit of travel. If a geared or other lift limiting device that operates in relation to drum turns is used, an additional lift limiting device that senses the position of the load block or hook, such as a gravity-operated switch or a slip clutch, shall be provided to detect the upper limit of travel.

3.14 Hand Chain (Hand Chain Operated Trolleys)

(a) The hand chain shall be guided to guard against disengagement from the hand chain wheel.

(b) The hand chain shall withstand, without permanent distortion, a force of three times the pull required to traverse the trolley with rated load.

Copyright ASME International
Provided by IHS under license with ASME
No reproduction or networking permitted without license from IHS
Not for Resale

4 ELECTRICAL

4.1 General

All electrical equipment furnished shall conform to the applicable sections of the latest issue of ANSI/NFPA 70. The user shall specify the voltage, frequency, and phase of the power supply. The supply voltage shall be maintained within ±10% of the rated motor voltage at the hoist with motor operating at rated load.

4.1.1 Hazardous Locations. When hoists are used in hazardous locations as defined by ANSI/NFPA 70 or other special codes, modifications, or additional safety precautions not covered by this Standard may be required. Only hoists designed for the conditions encountered shall be used in these locations.

4.1.2 Fungus Protection. In tropical areas or other warm and humid atmospheres, fungus growth may occur on unprotected organic materials or on accumulations of dust. There are materials and procedures that will minimize these effects. Refer to the hoist manufacturer.

4.2 Motors

(a) Motors shall be reversible, with torque characteristics suitable for hoist or trolley service, and capable of operation at rated loads and speeds in accordance with the class of service specified.

(b) Temperature rise of motors shall be in accordance with the latest NEMA Standards for the class of insulation and enclosure used. The hoist manufacturer will assume 104°F (40°C) ambient temperature unless otherwise specified by the user.

(c) All AC motors at rated frequency and all DC motors shall be capable of operation within ±10% of rated motor voltage, but not necessarily at rated voltage performance.

(d) Standard rated motor voltage shall be in accordance with Table 3.

(e) For nominal system voltage other than shown in Table 3, the rated motor voltage should not be less than 95% of and should not exceed the nominal system voltage.

4.3 Controllers

4.3.1 Types of Control. The following types of control are available:

(a) single speed squirrel cage motor with single speed magnetic control for use on hoists and trolleys;

(b) two speed squirrel cage motor with two speed magnetic control for use on hoists and trolleys;

TABLE 3 TYPICAL RATED MOTOR VOLTAGES

	Voltages		
Power Supply	Nominal System	Rated Motor Voltages	Permissible Motor Operating Range
AC, Single Phase, 60Hz	120	115	104 to 126
	240	230	207 to 253
AC, Polyhase, 60 Hz	208	200	180 to 220
	240	230	207 to 253
	480	460	414 to 506
	600	575	518 to 632
Ac, Polyphase, 50 Hz	208	200	180 to 220
	230	220	198 to 242
	400	380	342 to 418
DC	125	115	104 to 126
	125	120	108 to 132
	250	230	207 to 253
	250	240	216 to 264

(c) variable speed wound rotor trolleys:

(1) three or more position magnetic control for use on hoists with mechanical load brake and on trolleys;

(2) five position magnetic electric load brake control for use on hoists without mechanical load brake;

(3) five position magnetic countertorque control for use on hoists without mechanical load brake.

(d) single speed squirrel cage motor with cushioned start for use on trolleys;

(e) two speed squirrel cage motor with cushioned start for use on trolleys.

Other types of hoist and trolley control are available which are beyond the scope of this Standard. Consult the hoist manufacturer.

4.3.2 Contactors. Each magnetic control shall have contactors sized for the specified service. Reversing contactors shall be interlocked to guard against line-to-line faults.

4.3.3 Pendant Control

(a) Motion control actuators shall automatically return to the "OFF" position.

(b) The pendant control station shall be mechanically supported to protect the electrical conductors against strain.

(c) The pendant control station shall be clearly marked to indicate the function of each actuator.

(d) The order of control functions, unless otherwise

Copyright ASME International
Provided by IHS under license with ASME
No reproduction or networking permitted without license from IHS
Not for Resale

specified and as applicable, from top to bottom should be:

(1) stop-start (off-on, power off-power on). The "STOP" ("OFF," "POWER OFF") control actuator shall be red.

(2) hoist;

(3) trolley;

(4) other functions.

(e) Any pendant station that might present a hazard to the operator if a ground fault occurs shall be grounded.

(f) The maximum voltage in the pendant control station shall be 150 V AC or 300 V DC.

(g) Unless otherwise specified, the standard pendant control shall have a cord length which will locate the pendant approximately 3 ft to 4 ft (0.9 m to 1.2 m) above the lower limit of lift.

4.3.4 Pull Cord Control. Pull cord control, when furnished, shall consist of a self-centering return-to-neutral, controller or master switch for the motion of hoist or trolley. Two nonconducting pull cords with suitable handles, clearly marked for direction, shall be provided for operation of each controller or master switch. Unless otherwise specified, the standard pull cord control shall have a cord length that will locate the control handles approximately 4 ft to 5 ft (1.22 m to 1.52 m) above the lower limit of lift.

4.4 Control Enclosures

Control enclosures, unless otherwise specified by the user, shall be NEMA Type 1 general purpose for indoor application in accordance with Sections ICS-1-110, ANSI/NEMA ICS-1.

Other types, as defined by NEMA, include but are not limited to:

(a) NEMA Type 3 — dust-tight, rain-tight, and sleet (ice) resistant, outdoor;

(b) NEMA Type 3R — rainproof and sleet resistant, outdoor;

(c) NEMA Type 4 — watertight and dust-tight, indoor and outdoor;

(d) NEMA Type 4X — watertight, dust-tight, and corrosion resistant, indoor and outdoor;

(e) NEMA Type 12 — industrial use, dust-tight and drip-tight indoor;

(f) NEMA Type 7 — Class I, Groups C and D, indoor hazardous locations (explosive atmosphere);

(g) NEMA Type 9 — Class II, Groups E, F, and G, indoor hazardous locations (explosive atmosphere).

4.5 Resistors

Resistors, when furnished, shall have sufficient thermal capacity for the class of service specified. Enclosures for resistors shall provide means for heat dissipation and shall be installed to minimize the accumulation of combustible matter. Provision shall be made to contain broken resistor parts or molten metal.

4.6 Current Conductor Systems

Current conductor systems are not normally supplied with electric wire rope hoists. When required, they must be specified by the user.

Typical systems used are listed below for reference.

(a) Hoists Without Trolleys. These have a length of flexible power cord.

(b) Trolley Mounted Hoists. These have one of the following conductor systems:

(1) flexible cable

(2) coiled cord

(3) festooned cable arrangement

(4) cable reel

(5) rigid conductor

5 TESTING, MARKING, MANUALS, INSTALLATION, MAINTENANCE, AND OPERATING PROCEDURES

5.1 Testing of Hoists

All hoists shall be tested in accordance with ASME B30.16.

5.2 Marking (by Manufacturer)

5.2.1 Rated Load. The rated load of the hoist shall be marked on the hoist or load block.

5.2.2 Controls. Each control actuator shall be marked to indicate the direction of resultant motion.

5.2.3 Identification. The hoist shall be marked with the following information:

(a) name of the manufacturer;

(b) manufacturer's model or serial number;

(c) voltage of AC or DC power supply and phase and frequency of AC power supply;

(d) hoist circuit ampacity.

5.2.4 Warnings. All hoists shall have affixed to the hoist, load block, or controls in a readable position a label(s) displaying information concerning operating procedures. The label or labels shall be in compliance

Copyright ASME International
Provided by IHS under license with ASME
No reproduction or networking permitted without license from IHS Not for Resale

with ANSI/NEMA Z535.4, and shall include cautionary language against:

(a) lifting more than rated load;

(b) operating hoist when load is not centered under hoist;

(c) operating hoist with twisted, kinked, or damaged chain or rope;

(d) operating damaged or malfunctioning hoist;

(e) lifting people or loads over people;

(f) operating a rope hoist with a rope that is not properly seated in its groove;

(g) removing or obscuring warning label.

5.3 Manual

The manufacturer shall furnish with each hoist one copy of an instruction manual.

The manual shall include information on the following:

(a) installation

(b) operation

(c) inspection and testing

(d) lubrication, maintenance, and repair

(e) wiring diagram (may be supplied separately)

5.4 Installation (User's Responsibility)

5.4.1 Procedures. All equipment should be installed according to the manufacturer's recommendations, the applicable sections of ASME B30.16, ASME B30.11, ASME B30.17, ANSI/NFPA 70, and any other pertinent federal, state, and local regulations.

5.4.2 Support

(a) Supporting structures, including trolley(s), monorail, or crane (if any), shall be designed to withstand the loads and forces imposed by the hoist.

(b) The support beam must be properly sized and supported to handle the trolley wheel loads imposed on the beam.

(c) Trolley stops shall be installed at the limits of trolley travel.

5.4.3 Location

(a) Hoists shall be operated only in locations which will permit the operator to stand free of the load at all times.

(b) Refer to para. 4.1.1 for hoists installed in hazardous locations.

(c) Hoists shall be installed and applied in accordance with ANSI/NFPA 70, and in accordance with local and national codes.

(d) Pendant controls should be located at a convenient level above the operating floor.

(e) Hoists shall not be installed where the load hook can be lowered beyond the lower limit of travel under normal operating conditions unless the hoist is equipped with a lower limit device.

(f) When hoists are used in corrosive environments, there are materials and procedures which will minimize the effects of acids or other corrosive agents to extend the useful life of the hoist. Refer to the hoist manufacturer.

5.4.4 Direction of Motion. Polyphase hoists shall be connected to the power supply lines by the installer in such a manner that the hook motion agrees with the control marking. Internal connections in the hoist or pendant station wiring shall not be changed to accomplish this. Phase reversal (motor reversal), if necessary, shall be accomplished by reversing the power leads to the hoist unit.

5.4.5 Check Points. After installation the following items should be checked:

(a) trolley wheels for proper spacing with respect to the beam flange;

(b) hoist hook motion and trolley motion for agreement with control direction indication and prompt return of actuators to the "OFF" position;

(c) hoist load rope for freedom from twists, damage, and improper seating in the drum or sheave grooves;

(d) lift and travel limit devices for proper operation;

(e) braking system for proper operation;

(f) load rope, hoist, and trolley for proper lubrication;

(g) manufacturer's manual for additional check points.

5.5 Maintenance and Operating Procedures

All equipment should be inspected, tested, operated, and maintained according to the manufacturer's recommendation, the applicable sections of ASME B30.16, ASME B30.11, or ASME B30.17.

Consideration should also be given to pertinent federal, state, and local regulations.

6 TYPICAL ELECTRIC WIRE ROPE HOIST AND TROLLEY INQUIRY DATA FORM

See form on next page.

Copyright ASME International
Provided by IHS under license with ASME
No reproduction or networking permitted without license from IHS

Not for Resale

TYPICAL ELECTRICAL WIRE ROPE HOIST AND TROLLEY INQUIRY DATA FORM

HOIST

Quantity required _____

Rated load _____ Tons (_____kg)

Lift _____ft (_____m)

Reach _____ft (_____m)

Headroom _____in. (_____m)

Distance from operating floor to underside of beam or to support point:

_____ft _____in. (_____mm)

Hoisting speed _____ft/min (_____m/min)

Type of control:

☐ Single Speed ☐ Two Speed

☐ Variable Speed ☐ Other_____

POWER SUPPLY

Voltage	Phase	Hertz	Control Voltage
☐ 230	3	60	☐ 24
☐ 460	3	60	☐ 115
☐ 575	3	60	☐ Other ___
☐ 115	1	60	
☐ 230	1	60	
☐ ___	___	___ Other	

Performance Requirements (see Section 2 and Appendix B):

Average lift _____ft (_____m)

Number of lifts/hr _____

Number of starts/hr _____

Work period hr/day _____

Hoist service classification H- _____

Furnish complete information regarding any abnormal operating conditions: _____

Type of Suspension:

☐ Lug ☐ Hook ☐ Clevis

☐ Plain trolley ☐ Hand chain operated trolley

☐ Motor driven trolley

☐ Other _____

TROLLEY

Travel speed _____ft/min (_____m/min)

☐ Trolley brake required

Type of control:

☐ Single speed ☐ Two speed

☐ Cushioned start ☐ Variable Speed

☐ Other _____

Type and size of beam _____

Width of running flange _____in. (_____mm)

Minimum radius of beam curves

_____ft _____in. (_____m)

Clearance dimensions of interlocks, switches, or beam splices (if used) _____

Current conducter system (if requied):

☐ Tagline ☐ Festooned cable

☐ Cable reel ☐ Conductor-collector system

☐ Other _____

Type of conductors (make or manufacturer) ____

Location of conductors on beam (use sketch if necessary) _____

OPTIONAL EQUIPMENT REQUIRED

Copyright ASME International
Provided by IHS under license with ASME
No reproduction or networking permitted without license from IHS
Not for Resale

NONMANDATORY APPENDIX A

A1 General 18
A1.1 Scope 18
A1.2 Classification 18
A1.3 Definitions 18
A1.4 References to Other Codes and Standards 18

A2 Performance Requirements 19
A2.1 General 19
A2.2 Application 19
A2.3 Characteristics 19
A2.4 Emergency Manual Operation 19
A2.5 Load Positioning Control 19
A2.6 Lubrication 19
A2.7 Painting 19
A2.8 Workmanship 19
A2.9 Interchangeability 19

A3 Mechanical Requirements 20
A3.1 Design Stress 20
A3.2 Load Hooks 20
A3.3 Construction 20
A3.4 Type I Electric Wire Rope Hoist, Parallel or Right Angle Geared, or Plain Trolley Suspension 20
A3.5 Type II Electric Wire Rope Hoist Base (Winch Type), Wall or Ceiling Mounted 21
A3.6 Type III Electric Wire Rope Hoist Hook Suspension 21
A3.7 Materials 21

A4 Electrical 21
A4.1 General 21
A4.2 Electrical Equipment Characteristics 21

A5 Testing, Marking, and Data 22
A5.1 Testing 22
A5.2 Marking 23
A5.3 Data 23

A6 Typical Hoist Inquiry Data 23
A6.1 Acquisition 23

Tables
A1 Hook Throat Openings 20
A2 Electromagnetic Environment 22

Copyright ASME International
Provided by IHS under license with ASME
No reproduction or networking permitted without license from IHS
Not for Resale

PERFORMANCE REQUIREMENTS FOR ELECTRIC WIRE ROPE HOISTS USED IN MARINE AND OTHER APPLICATIONS AS REQUIRED BY THE U.S. DEPARTMENT OF DEFENSE (DOD)

A1 GENERAL

A1.1 Scope

This Appendix provides performance requirements beyond those cited in ASME HST-4-1999 for wire rope electric powered hoists for use in marine applications and other applications as required by the Department of Defense (DOD).

This Appendix, in conjunction with ASME HST-4-1999, replaces the requirements of MIL-H-15317 for electric wire rope hoists.

A1.2 Classification

Wire rope electric powered hoists shall be of the following types [see para. B6.1(b)]:

Type I Electric Wire Rope Hoist, Parallel or Right Angle Geared or Plain Trolley Suspension

Type II Electric Wire Rope Hoist, Base-Mounted (Winch Type)

Type III Electric Wire Rope Hoist, Hook Suspension

A1.3 Definitions

brittle material: material showing less than 10% elongation in gage length for the tensile test specimen.

continuous operation: lifting and lowering through the full hoisting range a rated load at the specified lifting and lowering speeds.

excessive wear: wear that is sufficient to impair safe operation of the hoist. The following conditions define excessive wear:

(a) increase in chain wheel pocket dimension in excess of 10%;

(b) increase in clearance tolerance between shaft and bearing in excess of 15%;

(c) life-lubricated bearings requiring lubrication;

(d) load-brake lining reduced in excess of 50% of useful life;

(e) reduction of bar diameter of link chain in excess of 10%;

(f) reduction of wall thickness for rollers and pins of roller chain in excess of 10%;

(g) reduction in gear tooth thickness of reduction gear drive in excess of 10%.

recovered materials: materials that have been collected or recovered from solid waste and reprocessed to become a source of raw materials, as opposed to virgin raw materials.

A1.4 References to Other Codes and Standards

Refer to the following publications, copies of which may be obtained from the publisher as indicated. The edition bearing the latest date of issue shall be used.

AGMA 6010, Standard for Spur, Helical, Herringbone and Bevel Enclosed Drives

AGMA 6034, Practice for Enclosed Cylindrical Warm Gear Speed Reducers and Gear Motors

Publisher: The American Gear Manufacturers Association (AGMA), 1330 Massachusetts Avenue NE, Washington, DC 20005.

ASTM A 48, Gray Iron Castings (DOD Adopted)

ASTM A 143, Practice for Safeguarding Against Embrittlement of Hot Dip Galvanized Structural Steel Products for Detecting Embrittlement

ASTM B 26, Standard Specification for Aluminum-Alloy Sand Castings (DOD Adopted)

ASTM B 633, Electrodeposited Coatings of Zinc on Iron and Steel (DOD Adopted)

Publisher: The American Society for Testing and Materials (ASTM), 100 Barr Harbor, West Conshohocken, PA 19428.

IEEE 45, Recommended Practice for Electric Installations on Shipboard.

Publisher: The Institute of Electrical and Electronics Engineers (IEEE), 445 Hoes Lane, P.O. Box 1331, Piscataway, NJ 08855-1331.

Copyright ASME International
Provided by IHS under license with ASME
No reproduction or networking permitted without license from IHS
Not for Resale

UL 991, Tests for Safety-Related Controls Employing Solid-State Devices

Publisher: Underwriters Laboratories Inc. (UL), Publication Stock, 333 Pfingsten Road, Northbrook, IL 60062-2096.

MIL-S-901, Shock Tests, H.I. (High Impact) Shipboard Machinery, Equipment, and Systems, Requirements for

MIL-E-917, Electric Power Equipment, Basic Requirements

MIL-C-24643, Cable and Cords, Electric, Low Smoke, for Shipboard Use, General Specification for

Publisher: Department of Defense (DOD) Standardization Documents Order Desk, Building 4D, 700 Robbins Avenue, Philadelphia, PA 19111-5094.

A2 PERFORMANCE REQUIREMENTS

A2.1 General

Performance requirements shall be in accordance with ASME HST-4-1999, and as specified in this Appendix.

A2.2 Application

Metals susceptible to corrosion attack in a sea water environment shall be treated, plated, or painted to provide corrosion resistance. In order to minimize electrolytic corrosion between dissimilar metals in contact with each other, metal-to-metal contacts shall be limited to those metals which, when coupled, are in accordance with sea water corrosion of galvanic couples requirements of MIL-E-917. If a metal is coated or plated, the coating or plating metal rather than the base metal shall be considered in metal-to-metal contact between parts that depend upon coating or plating for corrosion resistance.

When specified [see para. A6.1(c)], hooks shall be zinc plated. Zinc plating shall be in accordance with ASTM B 633, Type I, Class Fe/Zn 13. The hook throat safety device shall be constructed of noncorrosive material or treated for corrosion resistance.

The safeguarding against and procedure for detecting embrittlement of zinc coating shall be in accordance with ASTM A 143.

A2.3 Characteristics

A2.3.1 Weight and Dimensions. Maximum weight and envelop dimensions of hoists shall be specified if important to the application [see para. A6.1(d)].

A2.4 Emergency Manual Operation

When specified [see para. A6.1(e)], hoist shall be equipped with a hand wheel attached to an extension of the electric motor shaft for emergency manual operation of the hoist in the event of an electric power failure. It shall be possible to declutch the hand wheel when it is not in use. An interlock shall be provided to prevent operation of the hoist electrically while the hand wheel is engaged. A pull of not more than 1 lb per 200 lb of total hoist load shall be required to initiate movement, and not more than 1 lb per 300 lb of total hoist load shall be required for manual operation of the trolley.

A2.4.1 Hand Chain. The hand wheel described in para. A2.4 shall be operated by a removable chain, which when fitted, will have a drop of approximately 2 ft less than the specified lift of the hoist.

A2.5 Load Positioning Control

Hoist control system shall vertically position a load to within $\pm 1/4$ in.

A2.6 Lubrication

Lubricants used shall be readily available and be free of ozone depleting chemicals (ODC).

A2.7 Painting

Paints and coatings shall be lead and chromate free.

A2.8 Workmanship

The hoist shall withstand any operation specified herein without malfunction or component failure caused by faulty workmanship. Edges and surfaces exposed to operating and maintenance personnel shall be smooth and rounded so that a hazardous surface does not exist.

A2.9 Interchangeability

In no case shall parts be physically interchangeable or reversible unless such parts are also interchangeable or reversible with regard to function, performance, and strength. Component parts for the same type hoists

Copyright ASME International
Provided by IHS under license with ASME
No reproduction or networking permitted without license from IHS
Not for Resale

TABLE A1 HOOK THROAT OPENINGS

Hoist Rated Load lb	Hook Throat Opening Min., in.
1,000	0.75
2,000	0.906
3,000	1.0
4,000	1.125
5,000	1.125
6,000	1.5
7,500	1.375
10,000	1.625
11,000	2.0
13,000	2.063
15,000	2.063
17,000	2.063
20,000	2.25
25,000	2.25
30,000	2.75
40,000	3.0

from the same manufacturer shall be interchangeable to the greatest extent possible.

A3 MECHANICAL REQUIREMENTS

A3.1 Design Stress

The maximum combined stress in component parts shall not exceed 35% of the tensile yield strength of the material for hoist operation at rated capacity. The maximum combined stress in component parts shall not exceed 70% of its tensile yield strength, when the hoist is subjected to static or dynamic overload tests. For hoists requiring repair parts, all wear parts shall be readily accessible for replacement. For hoist operation, a pull of not more than 1 lb per 200 lb of total hoist load shall be exerted to initiate movement, and not more than 1 lb per 300 lb of total hoist load shall be required for manual operation of the trolley.

A3.2 Load Hooks

Hook throat openings shall be in accordance with the dimensions shown in Table A1. The hook shall be clearly marked with manufacturer identification and allowable hook load, or allowable hook load designator. Positive means shall be provided to prevent the load hook from loosening due to rotation of the load. Load hooks shall be readily detachable from the load chain.

A3.2.1 Range of Hook. Hoist shall pickup a load with the hook within 3.5 ft perpendicular to the drum centerline, at the point the rope reeves on the drum, and 7 ft below the drum centerline.

A3.3 Construction

Rotating shafts shall be supported in antifriction bearings or bushings, or both, and shall be enclosed against entry of foreign matter. Rotating and sliding surfaces shall be lubricated. Hoists shall operate through a temperature range of −20°F through 130°F for a minimum of 3,000 cycles without a failure. Gears shall be totally enclosed in a readily accessible casing that will permit examination, servicing, and cleaning. Positive means shall be provided to prevent any component working loose. Hoist parts shall be readily accessible for servicing and replacement as required.

A3.3.1 Wire Rope. Wire rope shall provide a safety factor of at least 5 for the rated load based on the minimum braking strength of the wire.

A3.3.2 Gears. Gears shall be manufactured in accordance with AGMA 6010 and AGMA 6034.

A3.3.3 Overtravel Protection. The lift limiting device specified in para. 3.13 of ASME HST-4-1999 shall ensure that the hoist shall automatically stop in the lowering position so as not to exceed the lower limit of travel.

A3.3.4 Overload Protection. Overload limiting devices shall not be used in Naval applications.

A3.4 Type I Electric Wire Rope Hoist, Parallel or Right Angle Geared, or Plain Trolley Suspension

A3.4.1 Trolleys. Trolleys shall be geared or plain, as specified [see para. A6.1(f)].

A3.4.2 Trolley Wheels. Trolley wheel spacing shall be suitable for use on applicable standard "I" beam flange size. Means shall be provided to prevent the trolley wheel flanges from riding up onto the supporting beam.

A3.4.3 Trolley Equalizers. Means shall be provided for distributing the hoist load equally into trolley side frames.

A3.4.4 Trolley Track Clamps. Quick acting track clamps shall be provided for locking fully loaded hoists to the track. Clamps shall be adjustable for wear and function equally well on curved or straight track. Clamps shall function without increasing the trolley wheel shaft or wheel bearing load, and in such a manner that the stresses resulting from locking will be taken up in the trolley frame. Operation of the track clamps shall be

Copyright ASME International
Provided by IHS under license with ASME
No reproduction or networking permitted without license from IHS
Not for Resale

a chain wheel equipped with hand chain. Hand pull required to set or release the track clamps shall not exceed 80 lb. Chain drop shall be approximately 2 ft less than the specified lift of the hoist.

A3.4.5 Cable Reel. An automatic, clock spring type cable take-up reel for ceiling mounting shall be furnished for the hoist motor power supply cable.

A3.4.6 Trolley Track. Trolley track for type I hoists shall be I-beam of the weight and radius specified [see para A6.1(g)].

A3.4.7 Control Stations. Control stations shall be pendant control type or bulkhead mounted as specified [see para. A6.1(h)].

A3.5 Type II Electric Wire Rope Hoist Base (Winch Type), Wall or Ceiling Mounted

A3.5.1 Mounting. Hoist shall be designed for deck, bulkhead, or overhead mounting.

A3.5.2 Control Stations. Control stations shall be pendant control type or bulkhead mounted as specified [see para. A6.1(h)].

A3.6 Type III Electric Wire Rope Hoist Hook Suspension

A3.6.1 Mounting. Mounting hook shall have a spring loaded type safety gate resting against the tip of the hook. Safety gate shall be of sufficient strength to withstand a pull against the safety gate equal to the weight of the fully loaded hoist.

A3.6.2 Control Stations. Control stations shall be pendant control type or bulkhead mounted as specified [see para. A6.1(h)].

A3.7 Materials

Materials used shall be of sufficient hardness and strength to withstand intended use and applicable tests.

A3.7.1 Recycled, Recovered, or Environmentally Preferable Materials. Recycled, recovered (see para. A1.3), or environmentally preferable materials should be used to the maximum extent possible, provided that the material meets or exceeds the operational and maintenance requirements and promotes economically advantageous life cycle costs.

A3.7.2 Prohibited Materials. Cadmium, asbestos, beryllium, brittle materials (see para. A1.3), and magnesium or magnesium based alloys (except steel or aluminum alloys which contain less than 0.5% magnesium) shall not be used unless otherwise specified. Welded aluminum 6061-T6, 2XXX, and 7XXX material shall not be used.

A3.7.3 Cast Iron. Cast iron shall not be used for load bearing parts. Cast iron for nonload bearing parts shall be in accordance with ASTM A 48, Class 35 or better.

A3.7.4 Aluminum. Aluminum castings, if used, shall be in accordance with ASTM B 26.

A4 ELECTRICAL

A4.1 General

Motors, controllers, brakes, and power supply cable shall be in accordance with IEEE 45 and, when specified [see para. A6.1(i)], shall withstand high impact, grade A shock (see para. A5.1.1). If shock testing is specified, the supply power cable shall be in accordance with MIL-C-24643.

A4.1.1 Hazardous Locations. When hoists are used in hazardous locations as defined by IEEE 45 or other special codes, modifications or additional safety precautions not covered by this Appendix may be required.

A4.2 Electrical Equipment Characteristics

A4.2.1 Motors. Temperature rise of motors shall be in accordance with IEEE 45 for the class of insulation and enclosure used.

A4.2.2 Hoist Brakes. Hoist shall be equipped with an electric brake, and except Type I, a load brake. Load brake shall be provided to prevent operation of the hoist in the lower direction unless power is applied, and it shall be independent of the electric brake. The electrical brake shall stop and safely hold 150% of the hoist rated load at any operating speed. The electrical brake shall hold a static load equal to 200% of the hoist rating.

Copyright ASME International
Provided by IHS under license with ASME
No reproduction or networking permitted without license from IHS
Not for Resale

TABLE A2 ELECTROMAGNETIC ENVIRONMENT

Frequency Range	Units	
	V/m	
Communications 250 kHz to 30 MHz	50	
Radar:	Average (mW/cm^2)	Peak (mW/cm^2)
200 MHz to 225 MHz	7	1,600
400 MHz to 450 MHz	5	300
850 MHz to 942 MHz	12	400
1.215 GHz to 1.365 GHz	3	3,900
2.7 GHz to 3.7 GHz	78	32,000
5.4 GHz to 5.9 GHz	2	1,400
16.3 GHz to 33 GHz	1	1,000

When specified [see para. A6.1(j)] manual release of the electric brake shall be provided to permit manual operation by the hand wheel as specified herein (see para. A2.4).

A4.2.3 Operator's Control Station. Push-button controls shall be momentary contact type (spring returns to the "OFF" position when released). Push-button controls shall be fully enclosed in a shock-resistant watertight case with rounded corners. Enclosure shall be watertight.

A4.2.4 Control Enclosures. Control enclosures, unless otherwise specified [see para. A6.1(k)], shall be NEMA Type 12 in accordance with IEEE 45.

A4.2.5 Electromagnetic Interference and Compatibility. Hoist electrical equipment shall operate satisfactorily under the electromagnetic environment specified in Table A2.

A5 TESTING, MARKING, AND DATA

A5.1 Testing

A5.1.1 High-Impact Shock. When specified [see para. A6.1(i)], hoists shall undergo the high-impact shock test in accordance with the requirements of MIL-S-901. Hoists shall undergo the type A test specified for a principal unit. Resilient mountings shall not be used. Trolley hoists shall be secured only by their own track clamps. Trolley hoists and hook suspension hoists shall be mounted in their normal position. Type III hoists shall be tested in the stowed position (horizontal attitude), constrained (not fastened) to prevent lateral movement, and clamped or strapped to resist vertical movement and to prevent the test unit from becoming a missile hazard to test personnel. Hoists shall have the load hook retracted for the test. The chain shall be looped in bights not to exceed 2 ft, and secured in or lashed to the load hook during the test. Test fixture for mounting the hoist shall conform, as applicable, to the deck platform or bulkhead mounting figures shown in MIL-S-901. A request to deviate from the test fixture, for mounting hoists differing from those specified, shall be submitted to the contracting activity. Shock tests shall comply with the requirements as specified. Following successful completion of high-impact shock test, the hoist shall be subjected to the following tests.

A5.1.2 Load. A hoist with overload protection device shall demonstrate its ability to lift and hold a load equal to $1\frac{1}{2}$ times its rated capacity without slippage.

A5.1.2.1 Static Load. Hoists shall support a static load of twice the maximum rated capacity for a period of 10 min. This load shall be suspended with the hoist load chain extended to the limit of the hoist's rated lift height. This extension may be changed to a minimum of 1 ft, provided the contractor demonstrates that the entire length of chain is capable of 200% load. The suspended test load shall be held by the hoist brake.

A5.1.2.2 Dynamic Load. Hoists shall be loaded to 150% of rated capacity and operated by hoisting and lowering the test load through the full operating range. Trolley type hoists shall be operated back and forth over a section of track, 8 ft or more in length, with the 150% load in suspension. This test shall be performed 10 times. Hoist and trolley shall operate satisfactorily and brake shall exhibit no sign of slippage.

A5.1.3 Operating. Hoists shall be tested for operation with rated load as follows:

(a) Hoisting Speed. Hoists shall be operated for approximately 90% of lift height, to verify conformance with the hoisting speed requirements.

(b) Lowering Speed. Hoist load hooks shall be lowered at a maximum speed of 80 ft/min and timed to determine conformance with the speed governor requirements.

(c) Travel Limit. Hoists shall be operated in the up and down directions so as to engage the limit switches to demonstrate hoist ability to prevent load hook overtravel.

(d) Load Positioning Control. Hoists shall demon-

Copyright ASME International
Provided by IHS under license with ASME
No reproduction or networking permitted without license from IHS
Not for Resale

strate its capability of accurately positioning a load. The test shall be conducted by establishing a reference height and then jogging the load to a position ±¼ in. above and below the reference height. Repeat each test at least six times. Each positioning shall be accomplished by energizing the motor not more than six times.

(e) Performance. Hoists shall be continuously operated at maximum speed (80 ft/sec) through approximately 90% of lift height for a period of not less than 30 min. During this test, the hoist shall operate satisfactorily without any indication of malfunction.

A5.1.4 Manual Operation. Hoists shall be tested to demonstrate:

(a) the ability to lift and lower through the full hoisting range a rated load by means of the handwheel arrangement;

(b) the interlock prevents electrical operation.

A5.1.5 Electromagnetic Interference Measurements. Electromagnetic interference testing shall be done in accordance with UL 991.

A5.1.6 Geared Trolley Traverse. On Type I geared trolley hoists, a pull of not more than 1 lb per 200 lb of total hoist load shall be exerted on the hand chain to initiate movement of the hoist load, and a pull of not more than 1 lb per 300 lb to initiate hoist and trolley movement.

A5.1.7 Track Clamp. Track clamps on Type I hoists shall be tested by subjecting the loaded hoist to a pull equal to one-third of the rated capacity of the hoist. The pull shall be exerted in either direction parallel to the trolley tracks. Clamps shall hold the loaded hoist from moving in either direction, when the trolley track is in a horizontal position.

A5.1.8 Fleet Angle. Hoists shall demonstrate their ability to pick up a load with the hook attached to the load at 3.5 ft out from an imaginary perpendicular 7 ft below the hoist. Hoists shall accomplish this lift without the rope jumping the grooves on the cable drum. The lift shall be conducted four times, once forward, once aft, and once on each side of the hoist.

A5.1.9 Mounting Hook for Type III Hoist. Safety gate of the mounting hook as specified shall demonstrate its ability to hold a load equal to the weight of the fully loaded hoist. This hook shall be attached to a pad eye of sufficient strength and a cable shall be rigged through the hook and safety gate to a load equal to the weight of the fully loaded hoist. Safety gate shall hold this load (without assistance from the hook) without any distortion and shall operate properly upon removal of the load.

A5.1.10 Endurance. Hoists shall be subjected to 3,000 cycles of continuous operation (see para. A1.3). A cycle of operation is defined as the lifting and lowering through the full hoisting range a rated load at the specified lifting and lowering speeds. After completion of the above tests, gears, chain, bearings, chain sprockets, brakes, and other wearing parts shall be examined for excessive wear (see para. A1.3).

A5.2 Marking

A5.2.1 Identification. In addition to the requirements of para. 5.2.3 of ASME HST-4-1999, the hoist shall be identified with the following:

(a) hoist weight and shock (grade), as applicable;
(b) type, as applicable;
(c) rated load;
(d) Appendix A, ASME HST-4-1999;
(e) National Stock Number (NSN) (if established);
(f) contract or order number;
(g) date of manufacture.

A5.3 Data

A5.3.1 Technical Manuals. When specified [see para. A6.1(l)] in the contract or order, the manufacturer shall prepare technical manuals in accordance with the data ordering documents and include the following:

(a) complete list of material;
(b) identification of each component for replacement;
(c) final drawings.

A6 TYPICAL HOIST INQUIRY DATA

A6.1 Acquisition

In addition to the typical hoist inquiry data of ASME HST-4-1999, acquisition documents must specify the following:

(a) Appendix A, ASME HST-4-1999;
(b) type of hoist required (see para. A1.2).
(c) if zinc coating of hooks is required (see para. A2.2);
(d) maximum weight and envelope dimensions required (see para. A2.3.1);
(e) if hand wheel is required (see para. A2.4);

Copyright ASME International
Provided by IHS under license with ASME
No reproduction or networking permitted without license from IHS
Not for Resale

(f) geared or plain trolley on type I hoists (see para. A3.4.1);

(g) size and radius of the I beam for Type I hoists (see para. A3.4.6);

(h) type of control station required (see paras. A3.4.7, A3.5.2, and A3.6.2);

(i) hoist shock resistance grade A (see paras. A4.1 and A5.1.1);

(j) manual release of electric brake (see para. A4.2.2);

(k) type of enclosure (see para. A4.2.4);

(l) technical manuals (see para. A5.3.1).

Copyright ASME International
Provided by IHS under license with ASME
No reproduction or networking permitted without license from IHS
Not for Resale

NONMANDATORY APPENDIX B
EXAMPLES OF DETAILED APPLICATION ANALYSIS

B1 TYPICAL EXAMPLES OF HOIST CLASS SELECTION (SEE TABLE B1 WHICH MAY BE USED AS A WORKSHEET)

B1.1 Example No. 1

(a) Application. Hoist to be used for machine shop work, to operate no more than 10% of the time with no more than 50 starts/hr and will have randomly distributed loads. No unusually heavy work periods are expected.

(b) Selection. Review of Table 1 of ASME HST-4-1999 shows that hoist utilization does not exceed that specified for Class H2. Class H2 can be specified with no further analysis needed.

B1.2 Example No. 2

(a) Application. Same as Example No. 1 except that the hoist is to be used periodically to unload a truck of steel. It is estimated that it will take up to 1 hr to unload the truck, with the hoist running 50% of that time.

(b) Selection. The normal utilization still falls within the Class H2 rating. However, the periodic unloading of the truck of steel would require the necessity of specifying Class H3.

B1.3 Example No. 3

(a) Application. A hoist for foundry use is to be used to handle raw castings for storage. Two basic sizes of castings will be handled, one weighing 1,500 lb and the other 7,500 lb. A 10,000 lb hoist is being considered. It is estimated that it will take 15 min of running time per hour to handle the duty cycle and that out of the 15 min, the hoist will be operating 50% of the time with 7,500 lb on the hook, 25% with 1,500 lb, and 25% with no load, with a maximum of 150 starts/hr.

(b) Selection. The load distribution cannot be defined as randomly distributed. Therefore, choosing a hoist directly from the Tables could lead to incorrect selection, following the procedure outlined under para. 2.3.2 of ASME HST-4-1999. Tentatively select a Class H3 hoist, based on the 15 min utilization time.

$$K = \left\{ \left[\left(\frac{7{,}500}{10{,}000} \right)^3 \times 0.5 \right] + \left[\left(\frac{1{,}500}{10{,}000} \right)^3 \times 0.25 \right] + \left[\left(\frac{0}{10{,}000} \right)^3 \times 0.25 \right] \right\}^{1/3}$$

$K = 0.6$. K is less than 0.65. A Class H3 hoist rated 5 ton would therefore be adequate to meet the requirements of the application.

B1.4 Example No. 4

(a) Application. Basically the same as Example No. 3, except that the user has decided to purchase a 4 ton hoist.

(b) Selection. Following the same procedure as in Example No. 3

$$K = \left\{ \left[\left(\frac{7{,}500}{8{,}000} \right)^3 \times 0.5 \right] + \left[\left(\frac{1{,}500}{8{,}000} \right)^3 \times 0.25 \right] + \left[\left(\frac{0}{8{,}000} \right)^3 \times 0.25 \right] \right\}^{1/3}$$

$K = 0.75$. K is in excess of 0.65 and the selection is incorrect. The selection of the Class H3 hoist rated 5 ton as in Example No. 3, is correct.

B1.5 Example No. 5

(a) Application. An electric wire rope hoist is to be used for dipping racks of parts into a series of tanks. The total lift distance is 6 ft. The operation is repetitive requiring 70 lift-lower cycles/hr. The total load is 1,000 lb including racks. An empty rack weighs 160 lb. The hoist is operating 90% of the time with 1,000 lb and 10% of the time with 160 lb.

(b) Selection. A 1 ton hoist has been selected.

$$K = \left\{ \left[\left(\frac{1{,}000}{2{,}000} \right)^3 \times 0.9 \right] + \left[\left(\frac{160}{2{,}000} \right)^3 \times 0.1 \right] \right\}^{1/3}$$

$K = 0.48$. K is less than 0.65. Selection of 1 ton

Copyright ASME International
Provided by IHS under license with ASME
No reproduction or networking permitted without license from IHS
Not for Resale

TABLE B1 EXAMPLE OF DETAILED ANALYSIS WORKSHEET

Task	Load *L*, lb	Load Magnitude $W = L/C$	Lift *D*, ft	No. of Lifts Per hr, *N*	Time $T = N \times 2 \times D/V$	Probability $P = T/R$
1						
2						
3						
–						
–						
–						
–						
–						
n						

hoist was correct. Total lifting and lowering distance/hr = 6 ft × 2 ft × 70 = 840 ft/hr. A hook speed of 30 ft/hr is selected. The resulting "ON" time per hour is:

$$\frac{840 \text{ ft/hr}}{30 \text{ ft/hr}} = 28 \text{ min/hr}$$

requiring a Class H4 hoist. The user estimated that 4 starts are required per lift-lower cycle resulting in 280 starts/hr, also requiring a Class H4 hoist. Note that the selection of a 60 ft/min hook speed would result in a 14 min/hr "ON" time but the hoist would still have to be Class H4 because of the 280 motor starts/hr.

B2 DETAILED ANALYSIS WORKSHEET

Total running time: $R = \Sigma T$. Maximum number of starts/hr: $S = 2 \times \Sigma N$

$$K = (W_1^3 P_1 + W_2^3 P_2 + W_3^3 P_3 + \ldots + W_{rl}^3 P_n)^{1/3}$$

(If $K > 0.65$, pick a hoist with higher capacity C and recalculate.)

where:

task = the load to be lifted
C = the rated load of the hoist
D = the distance the load is to be lifted, ft
L = the load to be lifted, lb
N = the number of lifts/hr
$P = T \div R$ = load probability. Load probability is the ratio of running time under each load magnitude condition to the hoist total running time. The sum total of all load probabilities used in the above equation must equal 1.0.
R = total hoist running time, min, for all tasks
T = the running time of the hoist for each hoist = $(N \times 2 \times D) \div V$
V = hoist speed, ft/min
W = load magnitude. Load magnitude is the ratio of the hoist operating load to the hoist rated load. Operation with no load must be included along with the weight of any dead load such as lifting attachments or devices.

Copyright ASME International
Provided by IHS under license with ASME
No reproduction or networking permitted without license from IHS
Not for Resale

AMERICAN NATIONAL STANDARDS FOR HOISTS, PALLETS, AND TRANSMISSION CHAINS

Performance Standard for Electric Chain Hoists HST-1-1999
Performance Standard for Hand Chain Manually Operated Chain Hoists HST-2-1999
Performance Standard for Manually Lever Operated Chain Hoists HST-3-1999
Performance Standard for Overhead Electirc Wire Rope Hoists HST-4-1999
Performance Standard for Air Chain Hoists..... HST-5-1999
Performance Standard for Air Wire Rope Hoists..... HST-6-1999

The ASME Publications Catalog shows a complete list of all the Standards published by the Society. For a complimentary catalog, or the latest information about our publications, call 1-800-THE-ASME (1-800-843-2763).

Copyright ASME International
Provided by IHS under license with ASME
No reproduction or networking permitted without license from IHS
Not for Resale

ASME Services

ASME is committed to developing and delivering technical information. At ASME's Information Central, we make every effort to answer your questions and expedite your orders. Our representatives are ready to assist you in the following areas:

ASME Press
Codes & Standards
Credit Card Orders
IMechE Publications
Meetings & Conferences
Member Dues Status
Member Services & Benefits
Other ASME Programs
Payment Inquiries
Professional Development
Short Courses
Publications
Public Information
Self-Study Courses
Shipping Information
Subscriptions/Journals/Magazines
Symposia Volumes
Technical Papers

How can you reach us? It's easier than ever!

There are four options for making inquiries* or placing orders. Simply mail, phone, fax, or E-mail us and an Information Central representative will handle your request.

Mail	*Call Toll Free*	*Fax-24 hours*	*E-Mail-24 hours*
ASME	**US & Canada:** 800-THE-ASME	973-882-1717	Infocentral
22 Law Drive, Box 2900	(800-843-2763)	973-882-5155	@asme.org
Fairfield, New Jersey	**Mexico:** 95-800-THE-ASME		
07007-2900	(95-800-843-2763)		
	Universal: 973-882-1167		

* Information Central staff are not permitted to answer inquiries about the technical content of this code or standard. Information as to whether or not technical inquiries are issued to this code or standard is shown on the copyright page. All technical inquiries must be submitted in writing to the staff secretary. Additional procedures for inquiries may be listed within.

Copyright ASME International
Provided by IHS under license with ASME
No reproduction or networking permitted without license from IHS
Not for Resale

ISBN 0-7918-2607-4





J09999

Copyright ASME International
Provided by IHS under license with ASME
No reproduction or networking permitted without license from IHS

Not for Resale