ASME HPS-2003

HIGH PRESSURE SYSTEMS

AN AMERICAN NATIONAL STANDARD



The American Society of Mechanical Engineers

Copyright ASME International
Provided by IHS under license with ASME
No reproduction or networking permitted without license from IHS

Not for Resale

The American Society of Mechanical Engineers

AN AMERICAN NATIONAL STANDARD

HIGH PRESSURE SYSTEMS

ASME HPS-2003

Copyright ASME International
Provided by IHS under license with ASME
No reproduction or networking permitted without license from IHS
Not for Resale

Date of Issuance: June 18, 2003

The next edition of this Standard is scheduled for publication in 2008. There will be no addenda issued to this edition.

ASME issues written replies to inquiries concerning interpretations of technical aspects of this Standard. Interpretations are published on the ASME Web site under the Committee Pages at http://www.asme.org/codes/ as they are issued.

ASME is the registered trademark of The American Society of Mechanical Engineers.

This code or standard was developed under procedures accredited as meeting the criteria for American National Standards. The Standards Committee that approved the code or standard was balanced to assure that individuals from competent and concerned interests have had an opportunity to participate. The proposed code or standard was made available for public review and comment that provides an opportunity for additional public input from industry, academia, regulatory agencies, and the public-at-large.

ASME does not "approve," "rate," or "endorse" any item, construction, proprietary device, or activity.

ASME does not take any position with respect to the validity of any patent rights asserted in connection with any items mentioned in this document, and does not undertake to insure anyone utilizing a standard against liability for infringement of any applicable letters patent, nor assume any such liability. Users of a code or standard are expressly advised that determination of the validity of any such patent rights, and the risk of infringement of such rights, is entirely their own responsibility.

Participation by federal agency representative(s) or person(s) affiliated with industry is not to be interpreted as government or industry endorsement of this code or standard.

ASME accepts responsibility for only those interpretations of this document issued in accordance with the established ASME procedures and policies, which precludes the issuance of interpretations by individuals.

No part of this document may be reproduced in any form,
in an electronic retrieval system or otherwise,
without the prior written permission of the publisher.

The American Society of Mechanical Engineers
Three Park Avenue, New York, NY 10016-5990

Copyright © 2003 by
THE AMERICAN SOCIETY OF MECHANICAL ENGINEERS
All Rights Reserved
Printed in U.S.A.

Copyright ASME International
Provided by IHS under license with ASME
No reproduction or networking permitted without license from IHS

Not for Resale

CONTENTS

Foreword v
Preparation of Technical Inquiries to the High Pressure System Committee vii
Committee Roster viii

Section

1000 Introduction 1
1100 Scope 1
1200 Definitions 1

2000 Hazards in High Pressure Systems 2
2100 General 2
2200 Hazards Related to Release of Contained Energy 2
2300 Effects of Contained Materials 3
2400 Hazards Released by the Flow and Fracture of Materials of Construction 4
2500 External Influences 6
2600 Hazards Checklist 7

3000 General Requirements 9
3100 Regulatory Requirements 9
3200 Responsibilities 9
3300 Selection of Equipment 10
3400 Examination and Testing 10

4000 High Pressure Components 12
4100 General 12
4200 Piping 12
4300 Vessels 12
4400 Pressurization Devices 12
4500 Valves and Accessories 13
4600 Overpressure Protection 15
4700 Process Vents and Potential Leaks 15

5000 Operation and Maintenance 17
5100 General 17
5200 Administration 17
5300 System Operation 19
5400 System Maintenance 22
5500 Service to Process Connections 23

Copyright ASME International
Provided by IHS under license with ASME
No reproduction or networking permitted without license from IHS
Not for Resale

6000 Hazardous Release Protection 25
6100 Hazards — Identification and Analysis 27
6200 Estimating the Magnitude of Hazards Release 30
6300 Performance Criteria for Personnel, Secondary, and Protective Systems 35
6400 Siting Risk Classification 45
6500 Protective (Mitigation) Systems 48
6600 Protective System Documentation 51

Figures

4541 High Pressure Flexible Hose Assembly 14
6020-1 Flow Chart of Section 6000 Use for Pressure Systems Risk Analysis 26
6300-1 Personnel Response Severity to Fragment Impact 38
6422.1 Frequency Versus Fatality for Total Natural Events 47

Tables

2600-1 Hazards Checklist 8
6300-1A Performance Criteria Value (Functionals) 36
6300-1B Examples of Receptors 36
6300-1C Examples of Performance Criteria 37
6422A Severity/Probability Code (SPC) 39
6422B Risk Levels 39
6600-1 Types of Records for Release Protection, Document Storage and Retention 53

Mandatory Appendix

I Terms, Definitions, and Reference Standards 55

Nonmandatory Appendices

A Suggested Good Practice Regarding Establishing Requalification Examination Plans for High Pressure Vessels 60
B Suggested Good Practice for Design and Installation of Piping Systems 63
C Suggested Good Practice Regarding Control of Piping Vibration 66
E References 69
F SI Units 71

Copyright ASME International
Provided by IHS under license with ASME
No reproduction or networking permitted without license from IHS
Not for Resale

FOREWORD

This Standard is a general standard intended to assist the Owner/User as well as the Designer, Fabricator, and Installer in planning, procurement, and safe operation of high pressure systems. Since all conditions cannot be predicted, this Standard covers some of the problems of most concern, based on the collected experience of the High Pressure Systems committee members.

In 1979, the American Society of Mechanical Engineers (ASME) Policy Board on Codes and Standards established an Ad Hoc Committee on High Pressure Systems to:

(a) provide assessment of need

(b) provide development of scope

(c) recommend committee structure

(d) recommend committee personnel

The Ad Hoc Committee completed its task and the ASME Policy Board based on the Committee's report established the following:

(a) Subgroup on High Pressure Piping under the jurisdiction of ASME B31.3, Chemical Plant and Petroleum Refinery Piping;

(b) Special Working Group on High Pressure Vessels under the jurisdiction of Subcommittee VIII of the ASME Boiler and Pressure Vessel Code Committee;

(c) Ad Hoc Committee on Systems Approach to High Pressure.

The Ad Hoc Committee on Systems Approach to High Pressure developed a scope and document outline for a safety standard that would be comprehensive, resilient, and practical for high pressure systems. Also, a recommendation to ASME was made to change the committee status. Based on the Ad Hoc Committee's recommendation, the ASME Council on Codes and Standards established this group as a standing committee known as the High Pressure Systems Committee reporting to the Board on Pressure Technology Codes and Standards.

This Standard consists of six Sections which provide descriptions and measures for preventing potential hazards from occurring in operations with high pressure systems.

Section 1000—Introduction, provides the scope of this Standard, and the definition of high pressure and high pressure systems.

Section 2000—Hazards in High Pressure Systems, provides information useful for alerting high pressure system Owners and Users of potential hazards. High pressure system safety begins with understanding, analysis, and control of system-specific hazards. Hazards awareness is required in the development and practice of system safety operation plans and also in hardware design.

Section 3000—General Requirements, places the responsibility for safe, prudent operation of high pressure systems on the owner. It discusses regulatory requirements and responsibilities of the Owner, Designer, Fabricator, and Installer. It also discusses selection of equipment, inspection and testing, periodic requalification, and serviceability assessment.

Section 4000—High Pressure Components, emphasizes the selection of materials of construction to ensure a "leak-before-burst" failure mode. It discusses piping, vessels, pressurization devices, valves and accessories, inspection and evaluation, overpressure protection, and piping installation and vibration.

Copyright ASME International
Provided by IHS under license with ASME
No reproduction or networking permitted without license from IHS
Not for Resale

Section 5000—Operation and Maintenance, outlines the requirements to ensure serviceability of high pressure system as to, but not limited to the following:

(a) Establishing control over the installation, inspection, testing, records, etc.

(b) Safety program for the indoctrination and training of people associated with high pressure systems.

(c) Establishing commissioning plans, operation, and maintenance manuals, etc.

(d) Providing overpressure/temperature protection and redundancy of these and other controls.

Section 6000—Hazardous Release Protection, provides information to assist the user and/or designer of high energy pressure equipment in providing additional protection, beyond that inherent in the basic design, from injury to personnel due to equipment or system failure.

This Standard was approved by ANSI and designated as ASME HPS-2003 on April 18, 2003.

Copyright ASME International
Provided by IHS under license with ASME
No reproduction or networking permitted without license from IHS
Not for Resale

PREPARATION OF TECHNICAL INQUIRIES TO THE HIGH PRESSURE SYSTEM COMMITTEE

INTRODUCTION

The ASME High Pressure Systems Committee meets regularly to consider revisions of the rules, new rules as dictated by technological development, and requests for interpretations.

The purpose of this Appendix is to provide guidance for making technical inquiries to the Committee to request revisions or additions to the Standard, or requests for interpretation.

The rules established by the Committee are not to be interpreted as approving, recommending, or endorsing any proprietary or specific design.

Failure to comply with these provisions may result in the request being returned to the submitter with no action.

INQUIRY FORMAT

(a) General

(1) Purpose. Specify one of the following purposes for the inquiry

(a) request for revision of present rules

(b) request for new (additional) rules

(c) request for an interpretation

(2) Background. Provide the information needed for the Committee's understanding of the inquiry, being sure to include reference to the applicable Section, Edition, Addenda, paragraphs, figures, and tables.

(3) Presentations. The proposer may desire or be asked to attend a Committee meeting to make a formal presentation to the Committee or to answer questions the Committee may have in regard to the proposal.

(b) Request for Revision or Addition.

(1) Identification of Paragraphs of the Standard. For a revision, identify the provisions of the Standard that require revision and submit a copy of the appropriate paragraphs as they appear in the Standard marked up with the proposed revision. For additions, provide a complete copy of the suggested wording.

(2) Statement of Need. Provide a brief explanation on the need for the technical revision or addition.

(3) Background Information. Provide the Committee with information including any available data or changes in technology which form the basis for the request and which will allow the Committee to adequately evaluate the proposal. Sketches, tables, figures, and graphs should be submitted as appropriate. Where applicable, identify any pertinent paragraph in the Standard that would be affected by the proposed revision. Additionally, paragraphs within the Standard which reference the paragraphs being revised should be identified.

(c) Request for Interpretation.

(1) Inquiry Structure. Prepare statements in a condensed and precise question format, omitting superfluous background information, and, where appropriate, composed in such a way that "yes" or "no" (perhaps with provisos) would be an acceptable reply. This inquiry statement should be technically and editorially correct.

(2) Proposed Reply. State what it is believed that the Standard requires.

(d) Submittal. Inquiries shall preferably be submitted in typewritten form; however, legible handwritten inquiries will also be considered. They shall include the name and mailing address of the inquirer, and be mailed to the following address: Secretary, ASME High Pressure Systems Committee, Three Park Avenue, New York, NY 10016.

Copyright ASME International
Provided by IHS under license with ASME
No reproduction or networking permitted without license from IHS
Not for Resale

ASME STANDARDS COMMITTEE
HPS HIGH PRESSURE SYSTEMS

(The following is a roster of the Committee at the time of approval of this Standard.)

OFFICERS

D. M. Fryer, *Chair*
S. J. Brown, Jr. *Vice Chair*
U. D'Urso, *Secretary*

COMMITTEE PERSONNEL

S. J. Brown, Jr., Quest Engineering Development Corp.
U. D'Urso, The American Society of Mechanical Engineers
E. E. French, Vispro Corp.
D. M. Fryer, Consultant
W. T. Hughes, Consultant
S. C. Mordre, Flow International Corp.
L. M. Picqueur, Exxon Chemical
T. C. Rhodes, Crucible Compaction Metals
E. D. Roll, Ingersoll-Rand Co.
J. R. Santosuosso, Cascade Consolidated Industries
A. J. Spencer, Factory Mutual
W. W. St. Cyr, John C. Stennis Space Center
J. F. Sullivan, E. I. Dupont

Honorary Members

C. B. Boyer, Consultant
T. G. Priddy, Consultant

SUBCOMMITTEE ON GENERAL

J. F. Sullivan, *Chair,* E. I. Dupont
E. E. French, Vispro Corp.
D. M. Fryer, Consultant
J. F. Harvey, Consultant
W. T. Hughes, Consultant
S. C. Mordre, Flow International Corps.
L. M. Picquer, Exxon Chemical
T. C. Rhodes, Crucible Compaction Metals
W. W. Robertson, Hydro-Pac, Inc.
E. D. Roll, Ingersoll-Rand Co.
R. D. Schueler, National Board of Boiler & Pressure Vessel Inspection
W. W. St. Cyr, John C. Stennis Space Center

SUBCOMMITTEE ON HAZARDOUS RELEASE PROTECTION

S. J. Brown, Jr., *Chair,* Quest Engineering Development Corp.
A. K. Gardner, Consultant
S. Grossel, Process Safety & Design, Inc.
D. C. Kirby, Union Carbide Corp.
C. A. Kot, Argonne National Laboratory
D. P. Roach, Sandia National Laboratory
J. R. Santosuosso, Cascade Consolidated Industries
R. P. Wurstner, Babcock & Wilcox

Copyright ASME International
Provided by IHS under license with ASME
No reproduction or networking permitted without license from IHS
Not for Resale

SECTION 1000
INTRODUCTION

1100 SCOPE

High Pressure Systems requirements shall augment the ASME Boiler and Pressure Code, Section VIII, Pressure Vessels and the ASME B31.3—Chemical Plant and Petroleum Refinery Piping Code. These requirements for High Pressure Systems exclude nuclear power applications.

These provisions were developed because of the high stress conditions usually imposed on equipment in high pressure applications which generally present severe physical hazards by high energy releases in the event of equipment failure.

It is intended that these provisions cover those areas not already accommodated by existing standards and shall serve as standards for design, materials, fabrication, installation, testing, inspection, maintenance, documentation, replacement, repair, and protective containment of high pressure systems.

1200 DEFINITIONS

1210 High Pressure

High pressure for the purpose of these provisions, is generally considered to be any fluid pressure at and above 10,000 psi (69 MPa) but is not limited thereto.

1220 High Pressure Systems

A high pressure system shall be defined as an integrated system that produces, contains, and controls high pressure utilizing a fluid medium. High pressure systems can be composed of combinations of, but not limited to, pressure vessels, piping, fittings, compressors or intensifiers, pressure limiting devices, pressure measurement and control devices, the pressure medium, protective containment or shielding.

1230 Other Definitions

Additional definitions are in Mandatory Appendix I of this Standard.

Copyright ASME International
Provided by IHS under license with ASME
No reproduction or networking permitted without license from IHS
Not for Resale

SECTION 2000
HAZARDS IN HIGH PRESSURE SYSTEMS [23][1]

2100 GENERAL

The objective of Section 2000 is to describe "hazards" which may be present in high pressure systems. The word "hazard" implies the potential to do damage.

Particular emphasis is placed on hazards which are significantly enhanced by the presence of high pressure. Some of the more probable hazards are discussed in this Section, but one should recognize that all hazards can not always be anticipated from past experience. A specific listing and quantification of hazards shall be developed very early in the planning, siting, and design of any new high pressure facility. The intent of such a review is to enable the owners and operators of high pressure systems to take positive action for a safe system. [2] [4] [11]

2101 Leak Before Break Mode

Generally, containment of high pressure demands high stress in structural materials. This requires a Designer to select higher strength materials, to use smaller design factors, or to use heavy wall construction. Hazards resulting from the failure of high strength materials under high stress often give little warning prior to their occurrence. For example, subcritical crack growth in high strength alloys under cyclic, high stress amplitudes, and/or in the presence of corrosive or embrittling environments, is extremely hazardous. Growth of such cracks to critical dimensions can lead to sudden and catastrophic release of the contained energy in the system. A "leak-before-break" mode of failure is preferred in the design, and the use of materials having low fracture toughness should be avoided. [2] [4] [10] [16] [20]

Engineering or designing "preferential failure modes" into high pressure systems is extremely important. Among these concepts are: the inherent leak-before-break material response mode, placement of pressure relief devices or structures at crucial locations in the system, and the design of joints such as flanges and/or bolts to yield. Careful attention shall be given to volume rate of release and safe paths for exhausting such releases.

2200 HAZARDS RELATED TO RELEASE OF CONTAINED ENERGY

The sudden brittle-like fracture of a highly pressurized vessel, pipe, or component may result in the acceleration of fragments, vessel components and contents, and adjacent structures to high velocity. Contained energy is often expressed as an equivalent weight of TNT explosive in order to describe this hazard. [5] [6] [8]

2201 Type of Energy Release

The released energy may consist of pressurized fluid energy of expansion, the strain energy stored in the structural containment system, and any chemical or thermal energy which might simultaneously participate in the release. The magnitude of contained energy is strongly dependent on the pressure, volume, and temperature of contained material. The rate of vessel rupture increases with high stress that may be present in high pressure systems. Under certain fast release rates, blast-like shock waves may result and the shock front pressure may be sufficient to injure personnel and damage property and/or control systems. Release of a large amount of contained energy in a closed room may result in a significant overall pressure rise. Small diameter jet releases of fluids from high pressure systems may penetrate the skin and other vulnerable parts of the body. If the contained material is hot or corrosive, someone may get burned. An evaluation of the energy contained in a high pressure system shall be conducted early in the design phase of the system. [4] [8] [12] [21]

2202 Hazards Information

A more detailed description of hazards related to the release of contained "kinetic" energy is found in Section 6000. [5] [8] [19] [20]

[1] Numbers in brackets indicate References listed in Nonmandatory Appendix E.

Copyright ASME International
Provided by IHS under license with ASME
No reproduction or networking permitted without license from IHS
Not for Resale

2203 Triggering Additional Hazards

With increasing pressure the release of contained energy becomes more rapid and intense such that the possibility of triggering additional hazardous events becomes more probable. The need for separation and/or isolation of individual units in high pressure systems shall therefore be considered.

2210 Missiles

The severity of missile hazards is measured by the rupture speed, the magnitude of released energy, and the size and distribution of fragments which may be dispersed. The "blow out" of instrument parts, plugs, gages, etc., can be lethal in penetrating power. The velocity, shape, trajectory, and mass of "blown-out" objects are more predictable than general rupture of pressure components. The location and orientation of such parts on the pressurized system should be selected in the design phase to minimize this hazard. Shielding and barricading selected portions of such parts should be considered. [5] [8] [19] [20] [21] [23] See Section 6000.

2220 Blast and Shock Waves

A blast and shock wave hazard results when a high pressure system rapidly disintegrates. Pressure waves in air will completely sweep out and engulf the area as they advance such that the probability of exposure (i.e., getting hit) if one is in the proximity is large. Missile and shock wave hazards usually occur together.

The residual or overall pressure rise in a room can be hazardous. This is more threatening when the released energy is large and the room space is small; a vulnerable situation quite likely to be found in blast cubicled high pressure systems. See paras. 6300, 6400, and 6500. [6] [7]

2230 Leakage

Both internal and external leakage poses several hazards in high pressure systems.

2231 Internal Leakage. Large-volume expansions can occur from leakage past worn valve seats into auxiliary parts of operating systems. In such cases, there is a potential for fluid hammer and also a substantial danger of overpressurizing a low-pressure system. For systems with high fluid velocities, internal erosion of the piping or vessels can occur. Also, flow-induced vibration can have possible damaging effects. The consequences of internal leakage past valves shall be evaluated.

2232 External Leakage. When the contained fluid is combustible, or if it enhances combustion (oxygen, for example), an external leakage poses a fire or explosive hazard. In addition, high pressure fluid can produce an invisible jet of skin-penetrating power.

Systems which contain toxic gases pose special ventilation needs and requirements to constantly monitor the atmosphere. Leakage of gases, such as argon, can also be hazardous as they may displace oxygen to dangerous levels. When the density of such gases is also greater than air (e.g., argon or carbon dioxide), floor level ventilation systems are needed. These leakage hazards are enhanced by high pressure due to the fact that fluid tightness becomes more difficult to achieve, and the leakage rate may become deceptively fast. Adequate ventilation of protective, blast-resistant enclosures is required.

2240 Thermal Energy

Hazards associated with hot working fluids should always be considered in safety measures as the thermal energy may contribute to threshold phenomena such as combustion, melting, freezing, burning, boiling, etc. The sudden release of hot material into an inhabited area via vessel rupture or spillage shall be viewed as extremely hazardous and methods to mitigate such release are needed. High pressure will accelerate the rate of release of hot material.

2300 EFFECTS OF CONTAINED MATERIALS

The properties of contained materials are of a major concern in the design of all facilities, whether low or high pressure and in the assessment of the hazards which may result if these facilities fail. An understanding of process materials and their interaction with the materials of construction which contain them is essential if leak-free service is to be obtained. The presence of high pressure greatly increases the release rate of process materials if the pressure containing structure fails.

Another hazard may develop when pressure-sealed machine parts or structures are processed or tested under high external pressure. A minute leak may produce high pressure inside the part. This leak will often reseal, trapping the internal pressurized gas and when external pressure is relieved, the part will become a pressure

Copyright ASME International
Provided by IHS under license with ASME
No reproduction or networking permitted without license from IHS
Not for Resale

vessel. Such items may rupture at any time and with explosive force. If a part exhibits abnormal bulging or swelling after exposure to external pressure, it should be approached with extreme caution only by properly trained and protected personnel. [5] [21] See Section 6000.

2301 Release of Contained Materials

Hazards which may result from working fluids and process materials following their release are similar for both high and low pressure operations. These hazards may be additive to those related to release of contained energy (paras. 2200 and 2312) and the review and understanding of these additive hazards are very important to safe high-pressure operations.

NOTE: The uncontrolled release of process materials and/or working fluids at or near ground level shall be carefully avoided.

Process materials may be released as gases, liquids, mists, powders, bulk solids, supercritical fluids, or cryogenic fluids. The hazard they could impose on their surroundings include, but are not limited to: fires, explosion, corrosion, toxicity, biological, and radioactive effects.

2310 Major Concerns

Destructive effects of contained materials on structural elements in the pressure system will indirectly lead to hazardous releases of energy and other hazards.

2311 Corrosion. Corrosion of pressure system components by contained materials may result in release of contained materials and contained energy due either to general loss of wall thickness or localized attack at sealing elements. A further concern is the generation of hydrogen from the corrosion process which, under some conditions, can damage the pressure components. [1]

2312 Uncontrolled Reaction. Some fluids used in high pressure processes are subject to uncontrolled reaction (runaway or decomposition) which may result in high rates of increase of both pressure and temperature. Rupture discs or other suitable devices shall be provided on reaction vessels to release the contents without damage to the containing system. Uncontrolled reactions in piping systems may result in failures when the temperature and pressure rise simultaneously increasing stress and decreasing material strength. Uncontrolled adiabatic compression of process fluids which may decompose shall not be permitted. [21]

2313 Pressure Pulses. The action of reciprocating compressors, pumps, and pressure intensifiers introduces pressure pulses in the contained fluid. These pressure pulses cause cyclic stress in pressure system components which may initiate fatigue failures. The dynamic characteristics of the system should be evaluated to ensure that dynamic amplification (resonant response) to the pulses is limited by proper design. While the vibrational stresses may be relatively small, they will possibly be acting with higher equilibrium states of stress which can occur with high pressure. [3] [14]

2314 Oxygen Containment Systems. Containment systems for high pressure oxygen require special design considerations because of potential ignition and combustion of normally passive materials of construction. Selection of structural materials shall consider how easily they may be ignited and how vigorously they support combustion. In addition, it is essential that piping systems be arranged to minimize the probability of ignition caused by particle impact.

Hazards continue to exist with decommissioned systems that previously contained high pressure oxygen due to entrapment of gas diffused into the structural materials. Enforceable precautions are necessary to prevent flammable agents, and heat sources from being in close contact with such material surfaces.

Other chemicals may impregnate materials of construction, and materials compatibility should be questioned as a general safety precaution. [25] [26] [27] [28] [29] [30] [31]

2315 Autoignition of Combustible Mixtures. High pressure systems shall be reviewed for physicochemical effects of autoignition in combustible mixtures.

2316 Fluid Hammer. Fluid hammer can occur when an abrupt change in velocity occurs in a fluid system, and fluid hammer can result in the transfer of a large amount of momentum to the pressure boundaries. The pressure boundary shall be evaluated to ensure integrity under fluid surges and hammering conditions.

2400 HAZARDS RELEASED BY THE FLOW AND FRACTURE OF MATERIALS OF CONSTRUCTION

Structural failures in high pressure systems produce hazards from the release of contained energy and materials. The progressive and unannounced crack growth in materials which may occur in service pose special concerns.

Copyright ASME International
Provided by IHS under license with ASME
No reproduction or networking permitted without license from IHS
Not for Resale

Treatment of these concerns is a responsibility of all, throughout the various system phases from concept, design, fabrication, and testing to in-service operation and maintenance. [3] [9] [15] [16] [18]

2410 Fast Fracture

Fast fracture occurs when the critical level of stress is reached at the tip of a crack in a flaw-sensitive material. This type of failure tends to be dramatic and catastrophic. In order to prevent this, the Designer should use the "leak-before-break" criterion when designing high pressure systems as much as possible.

Fracture toughness is a measure of the ability of a material to sustain stress in the presence of a flaw. This condition is strongly dependent on temperature for some steels. For example, a given flaw in a structure under stress may become critical with decreasing ambient temperature without significant changes in the applied stress.

Fast fracture failures may also occur in otherwise ductile materials when loads are applied at an extremely rapid rate (strain rate sensitivity). [2] [4] [9] [16] [20]

2420 Distortion

Machine seizure or other effects can result in high pressure systems from distortion of structural materials which under lower pressure operations would be essentially rigid. The high loads and stress states caused by high pressure will cause deformation of materials in lateral directions, and these may open or close operational clearances and gaps.

2430 Corrosion and Erosion

Corrosion can result from chemical activity between various (incompatible) materials and erosion from velocity-related interactions between a flowing fluid and a pressure retaining boundary such as piping. These conditions may be internal or external, or combine to produce an increased overall condition. Internal attack is particularly insidious since it is difficult to detect.

2440 Creep

Creep is permanent distortion (plastic strain) which continually advances when pressure-containing materials are stressed at elevated temperatures for extended periods of time. The ultimate result can be a catastrophic rupture. The time to rupture, for a given material, is dependent on the stress and temperature levels recognizing that the stress and the temperature may be greater in high pressure systems. [17]

2450 Stress Corrosion Cracking (SCC)

Stress corrosion results in failure by cracking when the combined action of corrosion and stress exist on an SCC sensitive material. Cracking may be either intergranular or transgranular, depending on metal and corrosive medium.

There are a number of fluids which can produce stress corrosion cracking, including chloride solution, hydrogen, hydrogen sulfide, and caustic.

2451 Chloride Stress Corrosion Cracking. In austenitic stainless steels, the existence of chlorides, high tensile stresses (residual or applied), oxygen, and a temperature above approximately 140°F (60°C) produce significant rates of chloride stress corrosion cracking.

2452 Hydrogen-Assisted Stress Corrosion Cracking. Some high strength steels commonly used in high pressure service, in some conditions of heat treatment, are susceptible to Hydrogen-Assisted Stress Corrosion Cracking (HSCC). The source of hydrogen is often a corrosion process which may occur on either the process or the atmospheric side of the component. Materials having a yield strength above 100,000 psi (689 MPa) are more susceptible than those having lower strength. Even if HSCC does not occur at elevated temperature it should be considered during system outage periods (those operational times when the temperature is reduced). [9] [16]

2453 Caustic Stress Corrosion Cracking. High yield strength carbon and low alloy steels may be susceptible to caustic stress corrosion cracking. Stress relief may reduce this susceptibility.

2460 Embrittlement

The condition of embrittlement can lead to failure by fast fracture. [16]

2461 Hydrogen Attack. Exposure of some materials to hydrogen above certain partial pressure levels at elevated temperatures for extended periods causes hydrogen attack (also called "embrittlement" and "blistering"). [22]

2462 Transient Extreme Temperature Exposure. Exposure of some alloys to extreme temperatures for short periods of time, as during an uncontrolled reaction, can result in embrittlement. A similar condition can result when components are exposed to high temperatures (as in a fire) and are then quickly cooled by

Copyright ASME International
Provided by IHS under license with ASME
No reproduction or networking permitted without license from IHS
Not for Resale

water or other means. Embrittlement can occur in heat-affected zones of weldments. [16]

2463 Liquid Metal Embrittlement. Metals (such as zinc or cadmium) which are used as protective coatings and metal-based lubricants (such as lead) may become molten when exposed to high temperatures (as in a fire). They may cause embrittlement of some alloy steels to which they come in contact while molten.

2464 Radiation Embrittlement. Radiation damage is the effect on the mechanical properties of a material by emission of light and heavy particles from fissionable materials. The light particles (beta and gamma rays or cathode and x-rays) affect the properties of some non-metallic elements but have little effect on the properties of structural alloys.

Heavy particle effects (alpha, neutron, and fission fragments) on structural alloys are the result from collisions with atomic nuclei in polycrystalline grain structures. Fast neutrons can penetrate to significant depths into the metals while fission-fragment damage (includes alpha particles) is shallow to the exposed surface. Loss of ductility and fracture toughness occurs. Very small areas of high temperature which are quickly quenched by heat conduction to surrounding material may also occur and embrittle some alloys. [17]

These effects shall be considered any time a fissionable material is located near a high pressure system. Shielding is a very practical method of protecting pressure components from radiation. Direct hazards to personnel from all radiation shall be carefully and thoroughly prevented by designs prepared by nuclear radiation experts.

2470 Fatigue

Fatigue failures are usually categorized as either:

(a) Low Cycle. Fewer than about 10^5 cycles and a stress level considerably higher than the endurance limit; or

(b) High Cycle. More than 10^5 cycles and a stress level just above the endurance limit.

Some of the common sources of fatigue are fluid pressure, bending, and thermal gradients. Metal fatigue may be analyzed using the rules of the ASME Boiler and Pressure Vessel Code, Section VIII, Division 2 or 3. See Appendix A, para. A100. [3] [7] [15] [20] [22] [24]

2471 Pressurized Fluid. Pressurized fluid fatigue is caused by fluctuating stress due to repeated pressure pulses and cracks usually originating at a stress concentrator in the inner bore. The failure plane is oriented longitudinally, or parallel with the inner bore. Random vibrational pressures can be generated by separated flow of fluids over obstructions or other local velocity/pressure changes in flowing media. These excitations can be of sufficient magnitude, under certain flow rates and disturbances, that fatigue failures can result. [3] [14]

2472 Bending of Pipes. Bending fatigue is caused by pipe bending as a result of vibration. Cracks usually originate at a stress concentrator on the outside surface. Threads are the most common suspect areas and the failure plane is oriented in a transverse direction to the bore surface. [14]

2473 Thermal Fatigue. Thermal fatigue is caused by cyclic thermal transients which have sufficiently rapid rise-times such that the addition of local thermal stresses may cause the total stress to exceed the endurance limit.

2474 Combined Effects. The combined effects of cyclic fluid pressure, bending, and thermal stresses can be cumulative and the combined action of these excitations shall also be considered when evaluating potential fatigue failures. Presence of corrosive materials (see para. 2430) may effect fatigue life and shall be considered. [14] [15]

2480 Welding

Welding high strength alloy steel may introduce serious hazards unless certain precautions are taken in welding of these materials. Some of the effects that may result from welding these materials consist of, but are not limited to:

(a) incomplete penetration or lack of fusion;

(b) voids or inclusions (slag, porosity, etc.);

(c) residual stress;

(d) surface discontinuities (stress concentrations) and crack initiation areas;

(e) embrittlement of material in heat affected zones.

Any of these factors may lead to hazardous release of energy.

2500 EXTERNAL INFLUENCES

External influences include, but are not limited to, the following:

(a) failure of auxiliary systems (low pressure and electrical) that support and control high pressure systems

(b) natural threats such as lightning, excessive precip-

Copyright ASME International
Provided by IHS under license with ASME
No reproduction or networking permitted without license from IHS
Not for Resale

itation, ice, winds, tropical and tornado storms, seismic shocks, and flooding

(c) man-made external threats such as aircraft crashes, electrical power outage, uncontrolled industrial fires and explosions, and sabotage or terrorist attacks

Prudent siting, design, and operation of high pressure systems should include considerations for fail-safe concepts and procedures for prompt and safe shutdown and/or personnel evacuation under likely occurring external threats. [7] [13] See Section 6000.

2600 HAZARDS CHECKLIST

The "Hazards Checklist" in Table 2600-1 is provided as a guide in the development of a detailed Hazards Analysis. Responsible users shall make an assessment of the safety of their high pressure system.

Copyright ASME International
Provided by IHS under license with ASME
No reproduction or networking permitted without license from IHS
Not for Resale

TABLE 2600-1 HAZARDS CHECKLIST

Paragraph Numbers	Hazard Type	Specific Identification	Significance	Related Paragraphs
2100	Design rules/philosophy, goals			3210
2100	Material quality and fracture toughness			4100
2100	Pressure relief/control, paths			4600
2100	Periodic inspection plant			3210, 3400
2100	Physical-chemical analysis of process materials			3320
2100	Back-up protection, shields, siting			6000
2100	System specific and/or unusual concerns and hazards analysis			
2200	General energy release			
2210	Missiles			
2220	Blast and shock			
2230	Leakage control			
2240	Thermal energy			
2300	Process materials			3320
2311	Corrosion control			
2430				
2450				
2312	Uncontrolled reactions			
2313	Pressure pulses and vibration			4220
2320	Hazardous materials			
2400	Materials, NDE			
2410	Fast (brittle) fracture			
2420	Distortion and creep			
2440				
2450	Stress corrosion cracking			
2460	Embrittlement			
2470	Fatigue			4400
2480	Welding			
2500	Supporting systems			
2500	External hazards			

Copyright ASME International
Provided by IHS under license with ASME
No reproduction or networking permitted without license from IHS
Not for Resale

SECTION 3000
GENERAL REQUIREMENTS

Safe operation of high pressure systems requires understanding the basic technology assumptions and restrictions used in the design of these systems and of the specifics of their operation. This Standard places the responsibility for safe operation on the Owner. See Section 5000.

3100 REGULATORY REQUIREMENTS

Installations of high pressure components and systems shall be in accordance with applicable Codes and legislative rules at the location of installation. These codes and rules may include such documents as:

(a) ASME Pressure Technology Codes and Standards;

(b) Legislative rules (national, state, and local).

3200 RESPONSIBILITIES

3210 Owner

(a) The Owner is responsible for establishing an Owner's Specification for the high pressure system. This Specification shall include but not be limited to:

(1) all necessary process objectives: what the installation is intended to accomplish

(2) design requirements for pressure containing boundaries considering both normal and abnormal conditions

(3) environmental conditions

(4) acceptance criteria/testing in addition to Code requirements

(5) overpressure protection requirements

(6) identification of potential hazards and siting considerations associated with the proposed operation

(7) Codes and regulations which apply, including edition and addenda

(b) The Owner shall approve fabrication and installation instructions prepared by the system Designer.

(c) The Owner shall establish a plan to ensure the long-term adequacy of the high pressure system. This overall plan, as part of the Owner's Specification, shall include but not be limited to:

(1) initial system operational acceptance inspections and tests;

(2) periodic inspections and tests after initial acceptance of the system;

(3) operation and maintenance plans;

(4) provision for routine data gathering and record keeping throughout the life of the system. See para. 3420(e).

(d) The Owner is responsible to ensure that the necessary inspections and tests are performed, the results evaluated, and, if necessary, corrective measures taken.

(1) The Owner shall ensure that personnel are sufficiently experienced and trained to adequately perform the inspections required by this Standard.

(2) This Standard does not address Authorized Inspector inspections, commonly referred to as "third party" inspections, which may be required by various construction Codes; e.g., ASME Boiler and Pressure Vessel Code, Section VIII, or periodic in-service inspections which may be required by regulation at the location of installation.

(e) The Owner is responsible for the serviceability assessment of used equipment. This includes securing the necessary expertise to make the evaluations required in para. 3440.

(f) The Owner is responsible for preparing operating and safety procedures and for ensuring that all operating personnel are knowledgeable in these procedures.

3220 Designer

The Designer shall prepare instructions for fabricating and installing the system in accordance with the Owner's Specification and this Standard.

3230 Fabricator and Installer

(a) The Fabricator and Installer are responsible for carrying out their respective portions of the instructions prepared by the Designer and approved by the Owner.

(b) Any deviations from or changes to the instructions shall be in accordance with this Standard as prepared by the Designer and shall be approved by the Owner.

Copyright ASME International
Provided by IHS under license with ASME
No reproduction or networking permitted without license from IHS
Not for Resale

3240 Inspector

Inspection activities, including verification of requalification examinations required by this Standard, are the responsibility of the Owner. See para. 3420.

3300 SELECTION OF EQUIPMENT

3310 General

Selection of components which make up a high pressure system shall include an evaluation of the service conditions. Each component shall be suitable for the expected conditions, such as maximum pressure, temperature, cyclic service, process materials, vibration potential, etc., to ensure that the system is capable of performing its intended function. See Sections 2000 and 5000.

3320 Fluid Properties

Adequate evaluation of equipment and systems hazards requires consideration of the chemical, physical, and thermodynamic characteristics of the confined fluids. See Sections 2000 and 6000.

3330 Controls

(a) All high pressure systems shall have all significant process parameters monitored and controllable.

(b) Control system instruments shall have sensitivity and response time compatible with expected rates of change of process parameters. See para. 5300.

(c) The control system for power-operated valves shall ensure safety in case of loss of control power during operation. The Owner shall specify fail open, fail closed, or fail as-is.

(d) Control logic shall be adequate to accommodate emergencies as identified in para. 2600. See para. 5300. This could be in the form of:

(1) alarm annunciating

(2) rapid venting

(3) shutdown of services

(4) system isolation

3400 EXAMINATION AND TESTING

3410 Examination Intervals

Due to the potentially severe consequences from the extreme conditions of high pressure, inspection intervals for critical components shall be established (see para. 2400).

3420 Periodic Requalification

(a) High pressure systems shall be examined on a periodic basis for evidence of deterioration (see also para. 2400). This examination is for the purpose of requalifying each system for continued service.

(b) The examination program shall be established by the Owner based on past experience, as well as current technology. The program shall include

(1) a list of components to be examined

(2) required examination technique, technique sensitivity, acceptance criteria, and frequency of examination

(3) the results of all examinations shall be documented, and a summary shall be maintained for the life of the system (see para. 3430)

(c) For a pressure vessel, the record file shall be amended upon completion of the requalification examination to show the allowed number of operating cycles until the next required examination. Any record file revisions shall be done with the approval of the Inspector. See Nonmandatory Appendix A, *Suggested Good Practice Regarding Establishing Requalification Examination Plans For High Pressure Vessels.*

(d) Nondestructive examiners shall be qualified in accordance with ASNT SNT-TC-1A, *Recommended Practice for Nondestructive Testing Personnel Qualification and Certification*, or an alternate system specifically accepted by the referenced construction Code.

(1) The nondestructive examiner shall conduct the examination and report all relevant indications.

(2) Reported indications shown by any of the nondestructive methods shall be evaluated by personnel familiar with the requirements for high pressure components for the purpose of determining fitness for service.

(e) The Owner shall maintain an operating log that includes the following:

(1) number of significant pressure and/or temperature cycles. (These are cycles which have been shown during the design analysis to significantly affect fatigue life.)

(2) Pressure. Alternatives to recording exact pressure of each cycle.

(a) using maximum operating pressure for all cycles

(b) establish groups of operating cycles with a maximum pressure range and a conservative estimate of the number of cycles for each group

(3) if applicable, temperature and duration of each cycle.

(4) process fluid.

Copyright ASME International
Provided by IHS under license with ASME
No reproduction or networking permitted without license from IHS
Not for Resale

(5) any incident and/or accident and any subsequent evaluation thereof (see Section 5000).

(6) all periodic examination reports.

(7) alterations and repairs.

(8) significant external events.

3430 Serviceability Assessment and Assurance

(a) The results of examinations and tests shall be reviewed and evaluated by the Owner or his designee to determine suitability for continued service, as well as the appropriate time interval to the next examination.

(b) The corrective actions found necessary by the evaluation of examination and test results shall be completed and documented.

(1) Repairs or alterations of equipment shall be specified by a Designer familiar with the requirements for high pressure components, and shall be approved by the Owner.

(2) Repairs and alterations shall be examined.

NOTE: In this context, the term "repair" excludes such normal maintenance functions as reconditioning seal surfaces within remachining limits established by the design.

3440 Serviceability Assessment of Used Equipment

(a) When it is desirable to use equipment which has seen prior service ("Used Equipment"), an assessment shall be made of its suitability for the proposed service. This review shall include, but not be limited to:

(1) Review of the equipment manufacturing history, including design basis, metallurgy, fatigue considerations (if applicable), initial examination, and test reports, including material certification, if available.

(2) Review of the equipment's operating history, including pressure cycles, temperature cycles, process materials, reports of Incidents and Accidents, examination results, repairs, alterations, maintenance records, etc. This review may include conservative estimates by the Owner, if a documented operating history is not available.

(b) Based on the review of manufacturing history, operating history, conditions during storage, and proposed service, appropriate examinations shall be specified and performed to assess the condition of the equipment as it exists and to assess its ability to perform safely in the intended service. When placed in service, the equipment shall become subject to the requirements of para. 3210(c).

(c) If information is not available to comply with (a) and (b) above, then qualification of such equipment is outside the scope of this Standard.

Copyright ASME International
Provided by IHS under license with ASME
No reproduction or networking permitted without license from IHS
Not for Resale

SECTION 4000
HIGH PRESSURE COMPONENTS

4100 GENERAL

This Section provides guidance relative to the design and application of high pressure components. An overriding concern in the design of components in a high pressure system is selection of materials of construction to ensure a "leak-before-burst" failure mode to the maximum extent possible.

Selection of materials of construction for pressure-containing components should consider both the deterioration modes discussed in Section 2000 and other factors specific to the process and/or site as determined by the Owner and Designer.

4200 PIPING

4210 General

(a) Piping associated with a high pressure system shall comply with the appropriate ASME piping code.

(b) In addition to the design requirements of the appropriate ASME piping code, the effects of vibration on the high pressure piping system shall be considered (see Nonmandatory Appendix C).

(c) The degree of support required in high pressure piping systems frequently results in a rigid system. The Designer shall specify joint alignment tolerances, and shall ensure that joint assembly to these tolerances can be achieved without introducing excessive pre-stress into system components.

(d) High pressure joints shall be designed and constructed such that a leak at the primary seal location will not result in a pressure buildup in other areas of the joint of a magnitude sufficient to cause a gross structural overload. Weep holes or other means of venting shall be considered.

(e) The possibility of pipe whip as a result of a pipe or joint failure shall be considered in the design of the piping system joints and supports.

4220 Small Bore Pipe

(a) The layout of small bore pipe [1 in. (25.4 mm) O.D. or less] is often determined on site. Therefore, it is necessary for the Designer to provide the information required to ensure proper installation and follow-up inspection. The information which should be supplied falls into the categories of:

(1) Requirements. Design items which must be satisfied; and

(2) Guidance. See Nonmandatory Appendix B, para. B100.

(b) Vent holes in valves and fittings shall not be blocked by either supports or insulation.

4300 VESSELS

4310 Design

Vessels and closures, including yokes and other restraining structures, shall be in accordance with the requirements of the ASME Boiler and Pressure Vessel Code, Section VIII, or otherwise approved by the state or jurisdiction in which they are installed, when applicable.

4320 Seals and Gasket Joints (Static and Dynamic)

The sealant or gasket material may be of any type, configuration, or material that experience, test, or analysis shows is compatible with the contact pressure, temperature, environment, and operating service (static or dynamic).

4330 Heating and Cooling Jackets

Heating and cooling jackets shall be in accordance with the requirements of the ASME Boiler and Pressure Vessel Code, Section VIII.

4400 PRESSURIZATION DEVICES

4410 General

(a) The pressure-containing components in high pressure pressurization devices are often subjected to high levels of cyclic stress. Material selection and detail design should conform to the goal of "leak-before-burst". If experience or analysis indicates the possibility

Copyright ASME International
Provided by IHS under license with ASME
No reproduction or networking permitted without license from IHS
Not for Resale

of catastrophic failure, additional safety measures shall be taken to ensure that personnel will not be exposed should fracture occur. This may include but is not limited to examination for cracks, barricades, restricted access while in operation (see Section 6000), or replacement of equipment at a fraction of predicted life (see Section 3000).

(b) It is the responsibility of the Designer, when the cyclic stresses are such that a component is expected to have finite life, to inform the Owner of the expected life and failure mode of each such component.

(c) It is the responsibility of the Owner to institute maintenance, inspection, and protection programs based on the above paragraphs.

(d) Equipment design, material selection, and maintenance and inspection programs shall take into account corrosion, erosion, and temperature changes due to:

(1) normal operation
(2) temporary operation
(3) emergency shutdown
(4) emergency operation
(5) normal shutdown
(6) startup following an emergency shutdown

(e) The design of any joint or closure, particularly self-energizing seals, shall take into account changes in temperature and pressure that may occur in normal or upset operation.

(f) All enclosed chambers, cavities, etc., not intended to contain pressure, shall be adequately vented.

(g) The Owner shall be provided with complete material certification on all major components. For unique or limited production components, material certification requirements shall be similar to those of the ASME Boiler and Pressure Vessel Code, Section VIII. High production or "catalog" items, such as pipe fittings, should meet the same standards, but the Manufacturer is responsible for the integrity of the components and need not supply the certification to the Owner except as determined by contractual obligations.

4420 Reciprocating Pumps

If pump components (e.g., plungers or seals) are made from brittle materials which are likely to fragment when a failure occurs, then means shall be provided to protect operating personnel from the effects of such failure. See Section 6000.

Positive means shall be provided to limit discharge pressure to the maximum pressure allowed by design. This may be in the form of a pressure relief device or a positive method of limiting the motive force of the drive.

4430 Reciprocating Compressors

(a) The design shall incorporate a pressure relief device on the discharge of each stage of sufficient capacity and set at the proper pressure. In addition, the Owner shall consider the need to provide devices to limit or warn of excessive differential pressure across each stage. If the Owner elects to install such devices in his piping system remote from the machine, the Designer shall furnish the Owner with all necessary information to completely specify these devices. The devices and their locations should be approved by the Designer.

(b) Depending on the size, speed, and/or design of the machine, the Owner shall consider the need to incorporate devices to

(1) continuously monitor plunger alignment (runout)

(2) continuously monitor suction and discharge temperature to each stage

(3) protect the machine from severe vibration

These devices may activate alarms and/or shutdown sequences at the Owner's option.

(c) Instrument and lubrication pipe and tubing mounted on the machine shall be designed to tolerate inherent vibration.

(d) Where lubricated-type cylinders are used, the Manufacturer shall furnish the Owner with information specifying the minimum conditions of lubrication, including minimum flow rates and minimum specifications of the lubricant.

4500 VALVES AND ACCESSORIES

Valves and accessories associated with a high pressure system shall comply with the appropriate ASME Piping Code.

4510 Valve Design

High pressure valves shall be designed so that the possibility of stem ejection is minimized. Valves which use a single gland nut to retain the packing shall be designed with locking or retaining devices to prevent accidental unscrewing during operation.

4520 Power-Operated Valves

Provision for manually actuated valve shutoff is required where shutoff is necessary to ensure personnel safety. This may be provided within the design of the power-operated valve or by means of a separate manual valve.

Copyright ASME International
Provided by IHS under license with ASME
No reproduction or networking permitted without license from IHS
Not for Resale

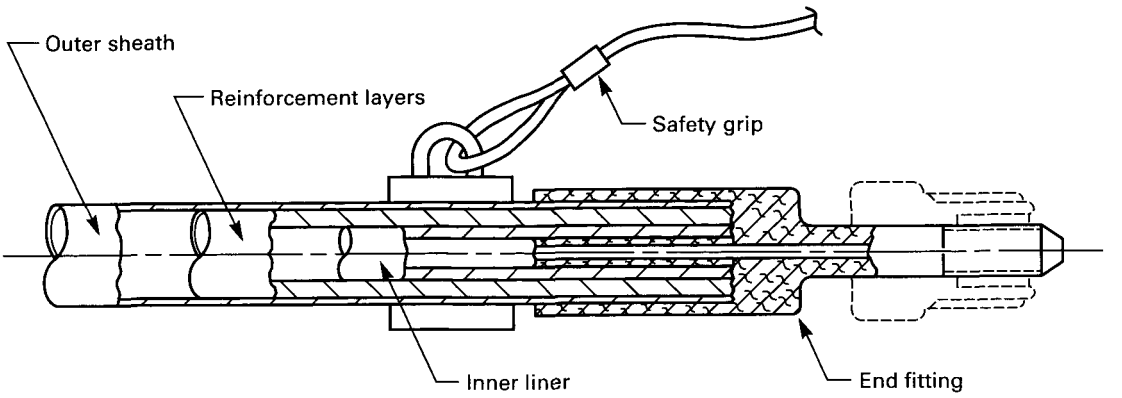

FIG. 4541 HIGH PRESSURE FLEXIBLE HOSE ASSEMBLY

4530 Check Valves

Check valves shall not be relied upon for isolation. Where isolation is required, a manual or power-operated block valve shall be used in series with the check valve.

4540 Flexible Hoses

Flexible hoses shall be used only for carrying fluids which are non-flammable, non-toxic, and not in themselves damaging to human tissue. The purpose is to provide minimum requirements necessary to protect operating personnel who are in close proximity to this equipment.[1]

4541 Hose Assembly. Only flexible hoses constructed of reinforcement layers between the inner liner and outer protective sheath and equipped with end fittings are considered within the scope of this Standard. See Fig. 4541.

4541.1 Inner Liner. The material of the inner liner shall be compatible with the medium to be contained. The inner liner should prevent leaks and seepages that could cause corrosion or fluid pressure buildup in the reinforcement layers.

4541.2 Reinforcement Layers. The reinforcement layers shall carry all the radial and longitudinal forces. The strength of the inner liner and outer sheath shall not be considered in the design of the reinforcement layers.

4541.3 Outer Sheath. The outer sheath is intended to provide protection against external mechanical and environmental damage. It shall be designed to limit pressure buildup of fluid permeating the liner and reinforcement layers.

4541.4 Joints and End Fittings. Joints and end fittings shall satisfy the requirements of ASME B31.3, Chapter IX, (K304.7.2).

4541.5 Hose End Restraint. Safety grips connected from hose to hose or from hose to other components shall be used and shall be capable of restraining the hose or end fittings in the event of joint separation unless an adequate alternative for personnel protection is provided.

4541.6 Leak Protection. Personnel shall be protected from through-wall or joint leaks by a mechanical barrier or by adequate separation distance. This barrier or distance provision may also be used to satisfy the requirements of para. 4541.5.

4541.7 Marking

(a) Each hose assembly shall be permanently marked with the manufacturer's name, lot identification, design pressure, and month and year of manufacture.

(b) If the hose construction material is age sensitive, this shall also be noted in the marking.

4542 Pressure Rating

(a) Burst pressure of the hose assembly shall be demonstrated by test to be at least 2.5 times the design pressure. This test shall be performed on a sample assembly made from each end of each lot, or every 1,000 ft (305 m).

[1] Additional information about high pressure service with flexible hoses may be found in the Water Jet Technology Association publication entitled *Recommended Practices for The Use of Manually Operated High Pressure Water Jetting Equipment.*

Copyright ASME International
Provided by IHS under license with ASME
No reproduction or networking permitted without license from IHS
Not for Resale

(b) The end fitting and its connection to the hose and its inner liner shall be such that its static burst pressure, as demonstrated by test, is equal to or higher than that of the hose.

(c) Each hose assembly shall be hydrostatically tested at 1.25 times its design pressure.

4543 Installation. Flexible hoses shall be installed and used in such a manner as to prevent kinking and to minimize torsion, axial loads, twisting, and abrasion.

4544 Inspection and Evaluation

4544.1 Inspection

(a) The hose assembly shall be operationally leak tested after it is relocated or reconnected.

(b) Hose assemblies, including the connecting fittings, shall be visually examined at least daily when in use to determine the surface condition and general mechanical and structural condition. If the hose assembly is protected by a mechanical barrier in accordance with Section 6000, it is exempt from this inspection.

4544.2 Evaluation. If there is a continuing leak from any portion of the pressurized hose assembly, or any of the reinforcement is exposed, the hose shall be removed from service.

4550 Electrical Power and Instrument Feed-Throughs

(a) Design of electrical power and instrument feed-throughs shall incorporate positive means to prevent ejection of the conductor in the event of failure of the insulator.

(b) Designs of these devices using pressure energizing seals, such as the Bridgman unbalanced area seal, shall ensure that the compressive strength of the conductor is not exceeded at operating pressures and temperatures up to and including test pressure.

(c) These devices shall each be tested to the pressure specified by the Owner but to not less than 1.25 times the rated operating pressure. Electrical characteristics shall be verified after pressure test.

4600 OVERPRESSURE PROTECTION

4610 Design and Installation Requirements

(a) Relief device piping systems shall be sized to handle the full required flow without exceeding the allowable overpressure of the system and shall be designed to maintain system integrity during operation.

(b) Peak flow rate shall be considered when sizing relief devices for positive displacement pumps. See Nonmandatory Appendix B, para. B500.

(c) There shall be no restriction such as isolation valves on the inlet side of the overpressure device.

(d) Isolation devices may be used on the vent side of an overpressure device provided that there are adequate mechanical provisions, interlocks, or administrative controls to prevent restriction of the vent path with the system in operation.

(e) Plugging of inlet passages with process materials shall be prevented.

(f) Plugging and/or corrosion of vent systems due to external materials such as rainwater and side process streams entering the vent system shall be avoided.

(g) Appropriate containment of vented contents shall be evaluated per para. 6500.

(h) Provision shall be made to exclude or remove rainwater or condensate from vent lines. When multiple overpressure devices are connected to manifolds or flare systems, the Owner shall determine which devices will operate at the same time and install a system adequate for such operation.

(i) Vent systems on high pressure devices may be subject to large temperature variations and piping movements due to flashing of process fluids, and they are often constructed of heavy-wall piping. Any small branch connections shall be designed to accommodate such movement. Proper support shall be provided for any valves or overhung weights.

(j) Reactive forces are a very important consideration when installing pressure relief devices for high pressure systems. The high energy available can impart large forces to the system. Both steady state and transient dynamic forces shall be considered to give a total dynamic load to be used for designing piping restraints.

4700 PROCESS VENTS AND POTENTIAL LEAKS

4710 Location of Vents

Vents shall be located to avoid injury to people and minimize potential for equipment damage.

(a) Venting may be manual, automatic, or due to overpressuring (relief devices).

(b) The possible ignition of flammables during venting shall be considered. The stack height shall be sufficient to allow safe evacuation from the proximity of a release. Refer to API Recommended Practice 521 for allowable thermal radiation exposure levels.

(c) High pressure vents (particularly rupture disks)

Copyright ASME International
Provided by IHS under license with ASME
No reproduction or networking permitted without license from IHS
Not for Resale

may have destructive energy levels. Vents shall be designed to discharge away from areas of possible human occupancy. Vents shall be designed to ensure that noise level and/or pressure buildup in occupied spaces are within accepted standards.

(d) The dispersion of the material being vented shall be considered so as not to present a hazard. Analyzers and alarms may be required to warn personnel of flammable, toxic, or reactive materials. Oxygen analyzers, alarms, and/or automatic ventilation of closed spaces also may be required if asphyxiants (toxic or non-toxic) might be present.

Argon is particularly hazardous because it is heavier than air, and will accumulate in pits and other enclosed spaces. Breathing pure argon results in rapid loss of consciousness. Argon shall be vented to the outside. Closed rooms, pits, etc., containing argon pressure vessels, storage vessels, or piping shall have an oxygen monitor with audible alarm and automatic ventilation, and shall be posted as a hazardous area at all entry points.

(e) Velocity at the vent outlet shall be high enough to provide adequate dispersal of vented gases.

Copyright ASME International
Provided by IHS under license with ASME
No reproduction or networking permitted without license from IHS
Not for Resale

SECTION 5000
OPERATION AND MAINTENANCE

5100 GENERAL

Personnel safety is the overriding concern in design, operation, and maintenance of high pressure systems. Managing process hazards begins with the initial project concept and continues throughout the service life of the system.

5101 Repairs and Modifications

When it is necessary to alter or modify an existing high pressure system or component, all proposed revisions shall be reconciled with the original design concepts, and reviewed and approved by a qualified Designer experienced in high pressure systems prior to alteration or modification. A "repair" shall not deviate from the original design without entailing an "alteration".

5102 Installation

(a) Converting design drawings into a functioning system requires considerable attention to safety during erection and installation of high pressure equipment. This includes preventing injury to people.

(b) Inspection and test procedures, provided or approved by the Owner, are required to ensure that the system is installed according to the Owner's Specification and any other regulations of a national, state, or local authority. As a minimum the following should be addressed in the procedure

(1) piping supports.

(2) vibration damper/isolators on piping.

(3) piping joint assembly to ensure alignment, surface condition, and tightness.

(4) source inspections of subcontractor furnished assemblies.

(5) equipment records and nondestructive examination records of any used or second hand equipment.

(6) component and system design compliance.

(7) pressure relief device size and installation.

(8) safety alarm and interlock performance.

(9) accessibility of system components for operation, maintenance, periodic inspections, and tests.

(10) identification of the fluid in the system. This could be done by color coding or tags.

(11) leak tests (using an inert fluid if the process fluid is hazardous).

(12) nondestructive examination records of welded joints.

5103 Commissioning

(a) Initial operation of a high pressure system shall be a team effort involving the Designer, Installer, and Owner, as appropriate. Effective and timely communication is essential for a smooth and incident-free startup. A "Process Hazards Analysis" review involving Designer, Installer, and Owner, as appropriate, shall be held prior to commissioning. This review shall be prepared as a vehicle for system evaluation and to document the information.

(b) The Owner's Commissioning Plan supplements the Operating Procedures and shall be written for each assembled system prior to system operation. The plan shall include, but not be limited to:

(1) a list of personnel (by job description);

(2) a brief description of major components of the system;

(3) a checklist of supportive and safety systems required to be operational;

(4) a set of checklists for crucial inspection operations;

(5) procedures for initial testing;

(6) complete documentation of safety interlocks, including P&I diagrams, logic diagrams, standard operating conditions, hierachy of controls, and relief device basis. See also para. 6600.

5200 ADMINISTRATION

An administrative system should be established and procedures provided to ensure that safety-related inspections and tests are performed at appropriate intervals. This includes such safety-related items as: alarms, interlocks, pressure relief devices, and equipment inspections. (See para. 3400.)

Copyright ASME International
Provided by IHS under license with ASME
No reproduction or networking permitted without license from IHS
Not for Resale

5201 Production Organization and Safety Administration

(a) Each high pressure system shall be under the direction of a production organization, which shall have responsibility and authority of its safety, operation, and maintenance.

(b) The methods established by the Owner for administering safety may vary but the following aspects shall be covered: safety training, safety rules, personal safety, and safety inspection checks. Safety rules shall be documented in written procedures and each individual involved with high pressure systems shall be trained in these procedures.

(c) Due to the hazards in high pressure operation, all management/supervisor levels of the functional organization responsible for operation and maintenance must understand and participate in the safety program.

(d) The program shall contain provision for training, and documentation of operating and maintenance people on the portion of the high pressure process in which they are involved. They shall also receive training in those areas with which they will interact on a regular basis. All maintenance and operation people shall also receive general system familiarization.

5202 Records

All records shall be documented and stored permanently by the user in a manner to prevent damage and be retrievable within a reasonable time based upon the record type. These files shall include, but not be limited to the following:

(a) all data pertinent to system design and installation.

(b) operating data such as pressure, flow rate, temperature, level, process fluid, etc.

(c) cyclic operation of pressure and/or temperature (see para. 3440).

(d) equipment records for each major component, which shall contain at least: Manufacturer's name, Design Specification reference, pressure and temperature rating, material specification reference, any modification data, and a historical record of all maintenance performed.

(e) operating history, maintenance, alteration or modification and repair records from the source of supply whenever used equipment is incorporated in a high pressure system.

The equipment records shall contain all notations pertaining to the assessment of serviceability of all equipment installed, which was not originally designed or assigned, in that system. (See para. 3420.)

(f) occurrences exceeding design limits of operation (including physical abuse) must be noted on the equipment records. If such an event occurs, the equipment shall be evaluated and documented by a qualified person experienced in high pressure system design prior to resuming operation. The safe operation of high pressure systems depends upon the technology accumulated from actual experience by people concerned with the operation. Records of accidents and incidents are very useful for trend analysis and shall be maintained.

5203 Safety Checks

A system shall be established to provide identification of each protective device, traceable to equipment records suitably marked to indicate status such as modifications, repairs, inspections, tests. See para. 5314.

(a) Each control system or component, as applicable, shall have a documented design basis which shows the design parameters such as flow, capacity, set point range, function, and specifications. The accuracy of the control system or components, as applicable, shall be consistent with the Owner's Specifications.

(b) The overpressure protection report shall define the protected system and the integrated overpressure protection provided. This report, which is kept permanently, shall include design calculations and related information pertaining to a specific device such as process material properties, basis for required relieving capacity, device sizing calculations, device specifications, and system constraints including limitations imposed by vent system piping. This report shall be certified by a person competent in the applicable field of design. The overpressure protection system shall comply with the Owner's Specifications.

5204 Process Hazards Reviews

(a) The Owner is responsible for initial Process Hazards Analysis and Periodic system reviews. The schedule for system reviews shall be based on expected life and usage conditions as outlined in the Process Hazards analysis.

(b) A Process Hazards Analysis shall be prepared on each system, similar to the study required for commissioning. It outlines each individual component and summarizes the system level of operational readiness. The purpose of this evaluation is to indicate the need for repairs, alteration, modification, or change in operating techniques or schedules, or any necessary

Copyright ASME International
Provided by IHS under license with ASME
No reproduction or networking permitted without license from IHS
Not for Resale

action that would improve the future safe system operation. All problems, malfunctions, and inspection data shall be analyzed and the appropriate corrective actions taken. All records and procedures shall be reviewed for completeness, compliance, and appropriateness to ensure safe and reliable operation. New technical information should be solicited and examined as it applies to the existing system and incorporated as required. This analysis and evaluation shall be documented.

(c) The review team conducting the system review (analysis) should include specially trained company representatives who are thoroughly schooled in the specifics, along with participation from production, management, maintenance, equipment inspection agent, insurance carrier, equipment manufacturer, etc., as appropriate.

5300 SYSTEM OPERATION

5301 Commissioning Plan

Prior to operation, the Owner shall prepare a commissioning plan to cover the requirements for operation and maintenance. In addition to items required in para. 5103, the items listed below shall be provided:

(a) a list of support systems required to be operational, such as: control power system, control air, cooling water, fire warning, etc.;

(b) a set of troubleshooting instructions for all major components of the system describing the probable malfunction and the possible acceptable remedies;

(c) a list of spare parts and expendable supplies required for commissioning;

(d) a list of instruments or recorders necessary for the commissioning phase but not required for sustained operation;

(e) complete set of operating procedures.

5302 Preoperation Checklist

In order to ensure safe and reliable operations and as part of the routine operation, a pre-operation checklist is necessary. Administrative controls shall be established to ensure adherence to these procedures. In establishing the preoperational checklist, the following items shall be considered by the user as a minimum:

(a) The installation shall be visually inspected for workmanship, joint integrity, prescribed safety equipment, and specification compliance insofar as possible.

(b) Pressure relief devices shall be in accordance with para. 5315 and interlock devices shall be assessed for operational readiness per para. 5316. All safety devices isolation valves, plugs, or gags shall be removed or locked open during system operation.

(c) Devices for high pressure system control shall be calibrated and checked for accuracy within the established frequency. See para. 5306.

(d) The integrity of the pressure system is of the utmost importance to prevent injury and property damage. Seals are generally the weakest link in high pressure systems. Any detected operating fluid leak should be reported. Where there is doubt, further investigation and evaluation should be made to determine whether safe operation (startup) can continue.

(e) Process containment systems should have a means for identifying the fluid in the system.

(f) Operating records are available and maintained up-to-date.

(g) The system should be clean and purged of incompatible fluid before introducing the process fluid. Purging is normally done with inert gas.

(h) Certain emissions may be hazardous. An emission control system shall be in place and functioning.

(i) Lockout procedures for power, control, and operational devices shall be established and implemented.

5303 Vibration

A review of the newly installed system after startup is essential to observe the various operating conditions to determine whether additional vibration controls are needed. Instrumentation may be necessary in some cases for permanent monitoring. (See para. 4200.)

5304 Training Operating and Maintenance People

High pressure systems introduce hazards beyond those normally encountered in lower pressure operations. The people involved with high pressure systems shall be cognizant of these factors and their implications. These individuals including operating, maintenance, and technical people, shall receive training which includes as a minimum the following:

(a) an overview of system design

(b) the interrelationship of system components such as valves, control systems, safety devices, and monitoring equipment

(c) instructions for specific jobs per procedures

(d) emergency operations

(e) specific instruction on handling of potentially dangerous fluid used in the process

Where applicable, review of incident and accident reports and the recommendations to prevent recurrence

Copyright ASME International
Provided by IHS under license with ASME
No reproduction or networking permitted without license from IHS
Not for Resale

provide excellent training sources. When specialized training is required to broaden the individual's frame of reference, training shall include comparison of similar systems and applications of physical process principles.

Training on a continuing basis is necessary to ensure that information is provided to appropriate individuals. Additional training should take place as technological advances, equipment failures, operator errors, or changes in the operating system take place.

5305 Operation and Maintenance Manuals

The Owner and the Designer shall participate in the compilation of Operating and Maintenance Manuals. These manuals shall be the basis for training operating and maintenance people. The Operating and Maintenance Manuals shall be located at the operating site and be available at all times. The manuals shall contain, but not be limited to the following:

(a) title page describing the equipment, site location, Engineer (person or company) responsible for the design, the Owner, date of issue and latest revision

(b) table of contents, index, list of illustrations and drawings

(c) process descriptions, equipment performance limitations

(d) mechanical description, electrical schematics, process and instrument schematics

(e) installation, commissioning, and startup procedures (see para. 5102)

(f) troubleshooting procedures

(g) periodic maintenance schedule

(h) recommended spare parts, expendable items, and procurement sources for each

(i) Manufacturers' operation and maintenance manuals for auxiliary equipment necessary for the operation of the high pressure system

(j) documented control software scheme and indexed listing

5306 Controls

Manual process control relies on specific operating procedures and diligent operator training and expertise. Safety interlocks should be employed (e.g., to prevent pressurization if a vessel closure is not complete and locked, and to prevent opening if pressure is not fully released). More sophisticated control systems will allow for maximum safety features and minimum reliance on operator activity. All control devices shall be readily identifiable as to function, mode of operation, and position. They shall be arranged for logical sequence of operation.

5307 Pressure Vessel Operation

The operation of a pressure vessel will depend on its application and design, with consideration of the following:

(a) The application of pressure will vary according to the process and the available equipment but, in general, operating cycles should be free of major pressure spikes. Such fluctuations, even for milliseconds duration, may be detrimental to the equipment unless this has been considered in the original pressure vessel design.

(b) Pressure-sensing devices shall be provided to control pressure. The pressure-sensing equipment shall be located to ensure interpretation of the pressure actually experienced in the vessel. Care shall be taken to minimize all possible influences of associated equipment or pressurizing media. These devices are extremely important to the safe operation of the system. They shall be maintained according to the standards and/or the Manufacturer's Specification applicable for the individual sensor.

5308 Heating

(a) In some applications, high pressure systems are used in conjunction with processes where heating of the pressurizing medium is achieved by external or internal heat sources or chemical reaction. Control of these heat sources is essential to safe operation of the system.

(b) The temperature of all major high pressure components shall be monitored and controlled to prevent failure due to excessive temperature, especially where joints exist.

(c) The pressurizing medium, whether liquid or gas, will expand during heating. The design and operation of the system shall integrate the pressure sensing device of the system with the control of temperature through alarms and interlocks that will warn, then reduce or shut off power to the heating system, to prevent an overpressure.

5309 Extended Non-Use Time

Special operating procedures may be necessary to ensure system integrity (e.g., corrosion protection) for non-use period. Also, special startup procedures may be needed to resume operation after a prolonged shutdown.

Copyright ASME International
Provided by IHS under license with ASME
No reproduction or networking permitted without license from IHS
Not for Resale

5310 Redundancy

The nature of the system being protected will dictate the level of redundancy required. Redundancy levels are based on the probability of occurrence, the nature of the medium, and the probable consequences of the occurrence. For example, systems that carry materials capable of decomposing violently shall be provided with redundant controls. Systems operating for long cycle times at service conditions which may affect sensing device life may require redundancy or on-line replacement capability.

5311 Depressurization

The depressurization cycle will vary according to the process requirements. Generally, the cycle should be reasonably smooth without abrupt stops or drops. The pressure releasing equipment shall ensure that the pressure is totally released to atmospheric pressure prior to opening the system. Control of vent valves may be manual or automatic. If automatically controlled, manual override shall be provided. Care shall be taken to ensure lines to and from decompression equipment are adequate to allow unobstructed operation of the device. Final depressurization of systems shall not be dependent on removal of plugs or other types of threaded fittings.

5312 Overpressure Protection

Overpressure protection consists of any device or system that will control the accumulation of pressure above the allowable pressure limit of the component or system. There may be several levels in the protection sequence. If one fails, the next level shall take over.

5313 Overpressure Protection Levels

When there are various levels of protection, they shall be provided as follows.

(a) The first protection level may be manual with a visual or audible alarm to warn operating people that pressure is higher than normal operating limits.

(b) The next level is automatic action through a control system to stop the source of overpressure. This action is an interlock function that shall include either opening an automatic vent valve or stopping the pressure source.

(c) The final level of protection relies on a mechanical overpressure protection device which controls pressure to an acceptable limit by venting. See Section 6000 regarding venting protection.

5314 Pressure Relief

To ensure safe operation, it is necessary for each device to be properly sized and installed in its proper location. The pressure relief installation shall be checked by more than one qualified person. Included in the procedures are such things as device location, serial number or identification number, manufacturer, size, and pressure rating. (See para. 5203.)

5315 Pressure Relief Inspection and Testing

The inspection and calibration method depend on the type of device. The inspection frequency depends on the process material, device type, and experience with the process.

Pressure relief valves require testing and calibration by a qualified inspection and repair facility.

5316 Safety Alarms and Interlocks

These devices shall be inspected and calibrated. This shall ensure that the devices activate when process limits are exceeded. A record shall be maintained for each device listing its identification number, type, serial number, location, and calibration data.

5317 Power-Operated Valves

These valves shall be overhauled on a fixed frequency based on existing experience. The nature of the process shall dictate specific inspection and calibration requirements. Repair and maintenance records shall be kept.

5318 Overtemperature Protection

Overtemperature protection consists of any device or system which controls temperature within a specified design limit. (See Section 6000 regarding heating protection.) Overtemperature protection is typically a multiple level sequence where if one protection level fails, the next level activates. Overtemperature may be caused either individually or collectively but not limited to the following:

(a) failure of the control system
(b) failure of the cooling system
(c) failure of temperature measurement devices
(d) chemical reaction
(e) heat from fire or other sources
(f) causes specific to equipment design
(g) human error

Copyright ASME International
Provided by IHS under license with ASME
No reproduction or networking permitted without license from IHS
Not for Resale

5319 Allowable Temperature Limits

The maximum and minimum allowable temperature of high pressure components or systems is specified either by the Manufacturer or by the Engineer responsible for designing the system. When there are several levels in the overtemperature protection sequence, they shall be provided as follows.

(a) The first level of protection may be manual. If a specific temperature is reached, a control system alarm, both audible and visual, is activated to alert the operating people that a specific temperature is outside the normal operating limits.

(b) The final level of protection is an automatic action taken by the control system to correct the condition. This corrective action shall either interrupt the power to the heat source, adjust the system pressure, activate an auxiliary cooling system, or depressurize the system. (See para. 5310.)

5320 Pressure and Temperature Control Installation

To protect against overpressure or overtemperature situations and to ensure safe operation, proper installation of equipment controlling the high pressure system is essential.

(a) The alarm and automatic interlock protection sequence shall be checked to verify operation prior to actually using the system. This is accomplished by simulating over-limit signals in the control system at all levels of protection.

(b) The sensing devices used for protection and control shall be installed in the specified locations. The sensing devices and connecting wires shall conform to the design specifications.

(c) The sensing devices require precise calibration, and calibration curves shall be obtained and made available to operators. Useful service life shall be considered from a preventive maintenance standpoint to ensure continued reliability of the sensing device as a function of operating environment.

(d) Sensing device redundancy shall also be considered to ensure reliability of the high pressure system.

5321 Pressure and Temperature Control Inspection and Calibration

(a) A formal inspection procedure shall be established and maintained to ensure operational readiness. This includes an inspection of the system during the initial installation and periodic inspections as a function of high pressure system utilization. Inspections and verification shall be done by more than one qualified person. Verifications of pressure and temperature controls include location, type, manufacturer, size, pressure, and temperature rating. Also verify specified inputs and outputs and reaction to alarm conditions where applicable.

(b) The control system and sensing devices shall be calibrated in accordance with the specified procedures. The calibration frequency will be dictated by the process, device type, and experience. Calibration, repair, and maintenance records shall be kept for the service life of the devices.

5322 Cold Temperature Consideration

Operating or testing a high pressure system in a cold ambient temperature may result in the pressure vessel or pressure equipment reaching the nil-ductility temperature range of the materials used. This has been known to lead to equipment failure. Operational and testing procedures should be established to prevent this possibility, or to protect personnel from the consequences of failure where it is not practicable to prevent operation in the nil-ductility range. (See Section 6000.)

5400 SYSTEM MAINTENANCE

See para 6422.3.

5401 System and Component Maintenance

System and component maintenance shall be performed in a manner consistent with the design and the Manufacturer's recommendations to ensure that safe operating conditions are maintained.

5402 Preventive Maintenance

Preventive maintenance programs shall be developed based on, but not limited to the following.

(a) Planned maintenance is based on a formal frequency schedule over the lifetime of the equipment for maintenance of high pressure systems and components. Schedules are established by the Owner of the system or component in accordance with recommendations by the Manufacturer and encompass a comprehensive program of work to be performed at each outage interval. Servicing intervals are established by evaluating the type of high pressure system, service experience, and Manufacturer or User recommendations. As an alternative, the maintenance may be carried out on a continuing basis. Equipment or system lockout shall be provided to prevent inadvertent operation.

Copyright ASME International
Provided by IHS under license with ASME
No reproduction or networking permitted without license from IHS
Not for Resale

(b) Condition-based maintenance plans are based on monitoring techniques such as vibration analysis, lubricating fluids analysis, ferrography, shock pulse analysis, radiography, ultrasonic and other nondestructive testing techniques may be used to determine serviceability of a particular component. The frequency of the measurements or examinations shall be based on service experience and Manufacturers or Users recommendations. Condition-based maintenance plans shall include a description of system component, description of instrument used, location of measurements, date of measurement procedures, record retention, frequency of calibration of measuring devices, and acceptable standards. Equipment for continuous monitoring may be permanently installed provided its suitability is demonstrated, its calibration requirements are complied with, and its installation does not jeopardize the safe operation of the system.

5403 Unscheduled Maintenance

A system or component may exhibit failure or deterioration in performance which requires maintenance prior to the scheduled time. These activities can involve "repair" or "alteration". Whenever a repair or alteration is necessary an assessment of the maintenance required on all other components not involved shall be made. This assessment shall determine if these components can be serviced in the same "shutdown" to gain an advantage in safety assurance of the high pressure system.

5404 Spare Parts

The spare parts requirements shall be determined by the Designer or User on the basis of the system safety, service condition, useful life, maintenance program, system arrangement, and downtime.

5500 SERVICE TO PROCESS CONNECTIONS

5501 General

(a) Service systems may include potable water; breathing air; instrument air; process air; inert gas; filtered, soft, or raw water; steam and condensate (when used for flushing equipment); overpressure protection; or any other system which may be connected to the process system without being a normal part of it during high-pressure operation.

(b) Service systems may be connected to process(es) from time to time for purging, flushing, or filling as the process requires. This shall be done and controlled in such a way as to prevent personnel injury, equipment damage, and contamination of service facilities.

(c) For high pressure processes, the normal process pressure will frequently be higher than the service system pressure. Therefore, the pressure in the process system shall be reduced to less than 80% of the service pressure before the connection is established.

(d) Adequate isolation of hazardous process materials from service systems shall be provided by mechanical devices to ensure:

(1) a total of at least three failures (including at least one component failure) would be required for backflow to occur from excessive pressure in the process system; or

(2) at least two component or human failures (including at least one component failure) would be required for supply pressure failure.

5502 Potable Water

Potable (drinking) water shall have no direct connection to any system containing non-potable substances, even for filling and flushing. (See OSHA regulations, Section 1910.141.)

5503 Breathing Air

Breathing air (compressed air) is used to protect operating or maintenance personnel in areas which would otherwise be hazardous. No interconnections of breathing air to any process or non-air system is permitted. Breathing air and instrument air may have a common source, provided that there is no possibility of introducing a hazardous substance (such as backup nitrogen) into the instrument air system. The breathing air supply shall be connected directly to the source, with adequate backflow prevention devices in the instrument air header. Where probable contaminants are undesirable but not hazardous, isolation may be achieved by (a), (b), or (c) as listed below:

(a) two force-loaded check valves with a relief device installed between them. The relief device shall be set above the supply pressure of the service but not above the design pressure of the service system. Force-loaded check valves may have springs or counterweights to ensure positive operation, or may be swingcheck valves installed in the vertical position with normal flow up.

(b) a pressure regulator in series with a backpressure regulator, where the pressure regulator is designed to vent excessive pressure at the intermediate level. Breathing air pressure shall be somewhat higher than plant

Copyright ASME International
Provided by IHS under license with ASME
No reproduction or networking permitted without license from IHS
Not for Resale

or instrument air headers to achieve this, and the capacity of the vent must exceed the capacity of the backpressure regulator.

(c) a pressure regulator or pressure controller followed by a relief device and force-loaded check valve. The relief device shall be set below the normal minimum supply pressure, but above the controlled pressure.

5504 Instrument Air

Instrument air shall not be connected to process systems except as permitted below

(a) instrument purges to systems which do not normally exceed 80% of the pressure in the instrument air header.

(b) air-operated tools, provided that each outlet has a permanently installed excess flow valve to protect the instrument air header. An additional force-loaded check valve is required at each outlet in a process area.

5505 Process Air and Inert Gas

Process air supplied to a system with reactive materials, flammable liquids, or combustible materials heated above their flash points shall be provided by an air supply dedicated to that process alone. Process air connections to systems containing water-reactive materials shall be provided with adequate means to assure isolation of the process material from water condensed by compression, regardless of flow direction. The same systems described in para. 5503(a), (b), or (c) for isolation and protection of breathing air headers shall be provided to protect process air and inert gas supplies from either undesirable or hazardous contaminants, other than flammable or water-reactive materials. In addition to those described in para. 5503(a), (b), or (c), one of the following may be used for isolation.

(a) Process air and inert gas may be connected directly to the process using a force-loaded check valve and an automatic double-block-bleed system, provided that the automatic system is fail-safe on loss of instrument air and/or electric power.

(b) Manual double-block-and-bleed systems or physical disconnects, combined with force-loaded check valves, may be used unless the potential contaminants are materials which are self-reactive, materials heated above their flash points, or any other material which may be hazardous to other users on the service header.

5506 Filtered, Soft, or Raw Water, Steam, and Condensate

Water and steam supplies shall be isolated from hazardous or undesirable materials with systems described in para. 5503(a), (b), or (c), or systems containing

(a) a physical disconnect with a force-loaded check valve on the process side of the removable hose or section

(b) a manual or automatic double-block-and-bleed valve arrangement followed by a force-loaded check valve

5507 Overpressure Protection for Services

If the service system pressure can attain or exceed the design pressure of the process system to which it is connected, a relief device set at the process system pressure and having adequate capacity for the maximum service flow shall be provided. If the process pressure can exceed the service piping system design pressure, a relief device set at or below that pressure and having adequate capacity for the maximum process backflow shall be provided at the service system connection. (Process backflow can be limited by installing an orifice or a check valve assumed to fail open in backflow calculation.) The relief device may not be required if the connection meets requirements for specific services as described in the paragraphs above.

Copyright ASME International
Provided by IHS under license with ASME
No reproduction or networking permitted without license from IHS
Not for Resale

SECTION 6000
HAZARDOUS RELEASE PROTECTION

This Standard is intended to provide the user with requirements for evaluating hazards and the required protection (mitigation) from failures associated with high energy pressure systems. Due to the potential consequences of explosion and degenerative effects associated with the failure of a high energy pressure system, in some cases additional measures must be taken to protect life and property. Paragraph 6100 addresses this concern, requiring a hazard identification and analysis, and possible mitigating features referred to as a protective system to reduce such risk (consequences times event probability).

6010 GENERAL

Mitigation of the consequences and the reduction of the event probability of failure of high energy pressure system components shall be employed to protect personnel and property in cases where the risk (the probability of failure of the basic system or components and the severity of personnel injury and property damage consequences resulting from the hazards from such failures) are judged by the owner to be unacceptable. This Standard applies to the operation of the pressure system during normal, testing, emergency, and faulted conditions. Situations in which protection shall be considered include, but are not limited to:

(a) The risk (consequences and probability) of injury to personnel or damage to property or the environment from a pressure system failure are intolerable.

(b) Components or systems exposed to upset conditions beyond the design condition.

(c) Existing components or systems not designed in accordance with recognized codes and standards, and insufficient operating experience exists to demonstrate high system reliability.

(d) Facility reclassification due to boundary redefinitions, alteration of facility layout, a location classification change, new high energy pressure system construction, a high energy pressure system upgrade, alteration of the pressure system, or pressure system relocation. Any changes made that alter risk require a facility re-evaluation per para. 6200 at Level I or II.

The owner is responsible for ensuring that design, analysis, specification, fabrication, use, and maintenance/inspection reports that are generated to meet the requirements of this standard are developed by qualified personnel.

Any equipment (e.g. instrumentation, sampling, transfer, portable equipment) that temporarily becomes part of the system boundary shall be analyzed in accordance with the requirements of Section 6000. Section 6000 applies to pressure systems with no restriction on volume, pressure, or fluid except as required by the pressure system standard.

6020 Organization of Use

Section 6000 on Hazardous Release Protection is organized into six parts to provide hazards evaluation of pressure systems as outlined in Fig. 6020-1.

Paragraph 6100 states that an identification of the various types of hazards and their characteristics shall be performed.

Paragraph 6200 states that the estimate of the magnitude of the various hazards shall be performed for a pressure system either by:

(a) Level I demonstrated upper to lower bound estimates of the magnitude of the hazard (yield) without a protective (mitigation) system, in which the reduced yield, as a result of dissipative pressure system and environmental effects, may be considered or neglected, or

(b) Level II, the reduced effects of hazards with a protective (mitigation) system in addition to those permitted in Level I.

Paragraph 6300 sets forth allowable limits of hazards exposure which protective systems shall provide for personnel and equipment.

Paragraph 6400 sets forth the requirements for rating a hazard and its effect on personnel and property. This Section shall be used to identify high and low risk areas surrounding the hazard.

Paragraph 6500 describes various types of protective systems that may be used to reduce the severity of the hazard at its source or to provide a specialized protection to personnel or equipment.

Copyright ASME International
Provided by IHS under license with ASME
No reproduction or networking permitted without license from IHS
Not for Resale

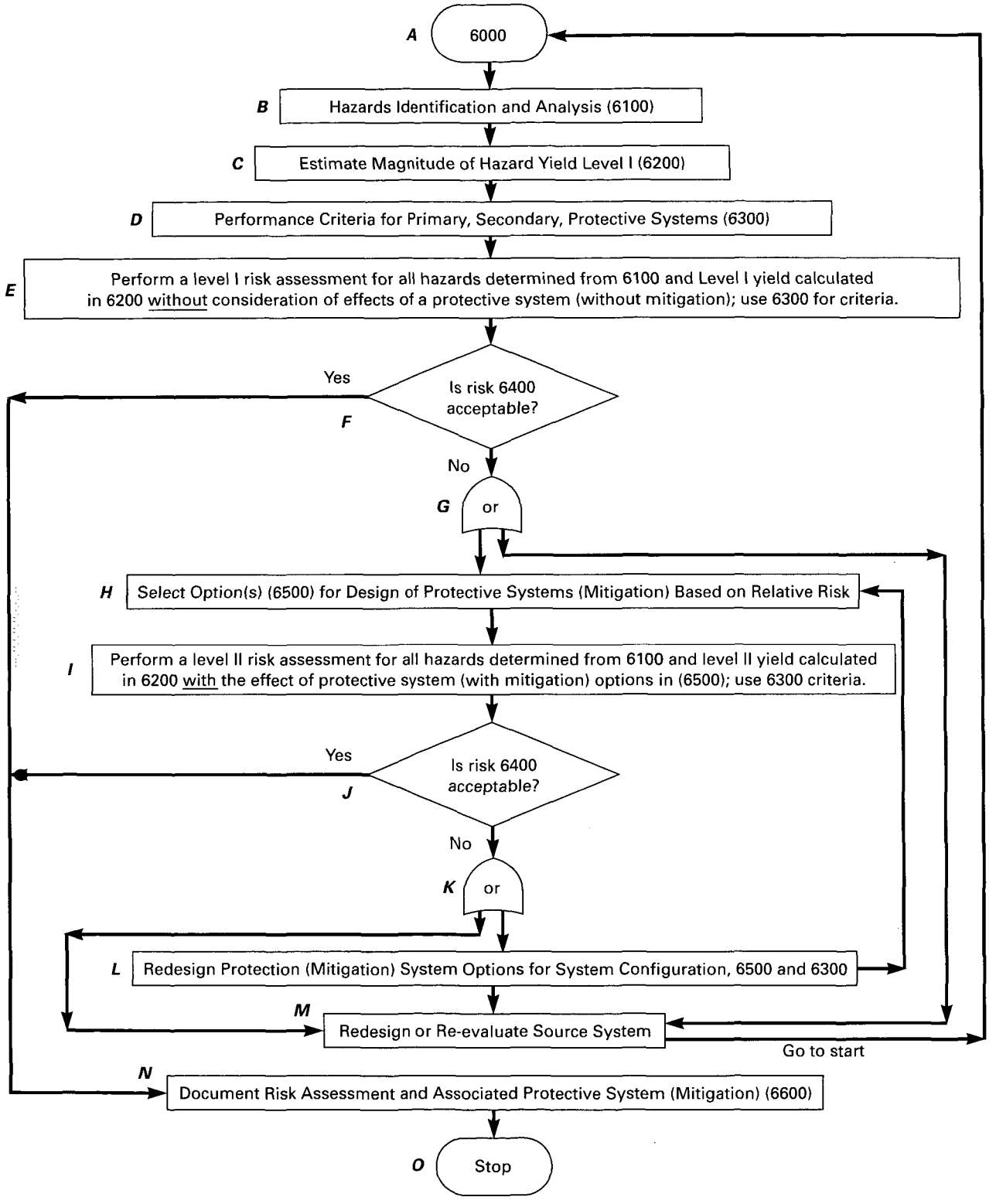

FIG. 6020-1 FLOW CHART OF SECTION 6000 USE FOR PRESSURE SYSTEMS RISK ANALYSIS

Copyright ASME International
Provided by IHS under license with ASME
No reproduction or networking permitted without license from IHS
Not for Resale

Paragraph 6600 provides requirements for documentation of the protective system.

As indicated in Fig. 6020-1, the overall hazard evaluation process for a facility is usually an iterative procedure starting with conservative assumptions and simple hazard estimates without protection (mitigation) (Level I) for assessments of exposure levels for potential receptors. If the facility analysis indicates that the results of an upset condition are acceptable, no further analysis is required. If the analyses indicates that the exposure levels are not acceptable, either more detailed analysis may be performed to take into account dissipative effects or/and a protective system is required (Level II). If the results of the analysis at Level I and Level II are not an acceptable means of protection or mitigation of the expected hazards, a pressure system or facility redesign may be considered and the analysis repeated until acceptable results are achieved. To perform the needed analyses, information must be obtained on the magnitude of yield of hazards (see para. 6200) and on the performance criteria for personnel and protective systems of potential receptors (see para. 6300). These data, together with an understanding of the facility operation, geometry, etc., provide the necessary inputs to a hazard evaluation.

6100 HAZARDS — IDENTIFICATION AND ANALYSIS

The user of this Standard shall:

(a) identify the various hazards posed to personnel. The method of analysis used to identify these hazards shall be documented (per para. 6600).

(b) Review HPS Section 2000 for supplementary information regarding Hazards Identification (related to the source system and not the protective system).

(c) Utilize those methods that are appropriate to identify hazards associated with the design, material selection, allowable flaws, fabrication, operation, maintenance, inspection, and materials used in the system.

Hazard source includes the contained media description such as chemical makeup, physical/thermodynamic state, and total quantities. Further, the media container or pressure system characteristics shall be known. For the receptors, which normally include personnel, equipment and structures, information on their susceptibility to the various hazards must be available. Based on this information a typical hazards evaluation shall include five or more of the following steps (which are shown in Fig. 6020-1):

(a) Identification of the possible types of hazards, based on the source content. (See Section 6100.)

(b) Estimation of the potential hazard magnitudes (conservative to exact) based on the total content quantities (Level I or Level II release analysis with or without system dissipative effects). (See Section 6200.)

(c) Determination of possible source failures, based on pressure system (container) failure modes and media characteristics. (See Section 6200.)

(d) Determination of hazard environment as a function of distance from the source, content dispersion, source failure mode, environmental conditions, and the physical state of contained media. (See Section 6200.)

(e) Determination of receptor response to hazard environments. (See Section 6300.)

(f) Evaluation of receptor risk vulnerabilities based on severity of hazards consequences and event probability. (See Section 6400.)

(g) Consideration of hazard mitigation/protection strategies. (See Section 6500.)

In the following paragraphs, the above procedures are discussed further and some of the analysis methods are outlined. Since source failure is discussed in para. 6200, receptor response criteria in para. 6300, and protection strategies in para. 6500, emphasis here is on an overview of the methodology for identifying the hazards environments.

6110 Hazard Classification and Analysis

All hazards, prompt and delayed, shall be considered when analyzing the effects of failure of high energy pressurized systems.

The prompt hazards are essentially dynamic ones, associated with forces or motions developed immediately upon energy release, or subsequent deflagration or detonation of released medium. They are primarily (but not limited to)

(a) blast waves.

(b) missiles.

(c) foundation motion.

(d) radiant heat and fireballs (degeneration). Radiant heat and fireball hazards are not associated with kinetic energy parameters but rather degenerative parameters. Degenerative hazards are associated with the change in properties of the receptors.

The Delayed Hazards are in general a result of longer term effects, not those of force or motion, and can be classified as degenerative effects. The exception is secondary explosions which may arise in a dispersed combustible vapor cloud. The degenerative ensuing hazards are (but not limited to)

Copyright ASME International
Provided by IHS under license with ASME
No reproduction or networking permitted without license from IHS
Not for Resale

(a) fire
(b) effects of hazardous chemicals
(c) biological effects
(d) effects of ionizing radiation

In identifying hazards of high energy pressure system failure and assessing their potential magnitudes, the total energy and hazards of the system just prior to failure shall be considered. The total energy shall include

(a) the contained media expansion energy
(b) the chemical/explosive/heat energy of the media
(c) the elastic strain energy of the pressure systems

In evaluating the overall hazards of an energy system, media toxicity and biological and radiation effects shall also be considered.

6120 Medium/Contents

The effects of the system medium/contents shall be considered in hazards identification and analysis. The severity of the hazard is strongly related to the physical states of the media contained within the high pressure system such as:

6121 Gases. Compressed gases are capable of storing considerable pressure energy, which can be released to generate blast waves or accelerate fragments in an accident.

6122 Flash-Evaporating Fluids. For a system with a given volume and pressure (operating or failure), the class of media presenting the next lower level of hazard than compressed gases is flash-evaporating fluids. It includes fluids which must be kept under pressure greater than atmospheric to remain liquid, and fluids which are normally liquid at room temperatures but are heated to the boiling points at elevated pressures.

6123 Liquids. Liquids are significantly less compressible than gases or flash-evaporating fluids and store much less energy per unit mass when compressed to high pressures. Therefore, they can release less energy per unit mass when a vessel or pipe bursts. But significant total energy can still be stored in a large volume system (vessel, tank, piping, etc). Limited accident and test data indicate that energy transfer to either blast waves or fragment energies is much less efficient than for the two previous sources. Thrust, jetting or rocketing becomes a major concern. Estimation of the total fluid energy which could be released can be done in exactly the same manner as for flash-evaporating fluids, providing one has available reasonably complete thermodynamic data for the medium.

6124 Solids. The user shall consider the hazards from solids in the system.

6125 Chemical Characteristics. For chemically reactive contents the explosion and combustion energies shall be considered.

6130 Blast

Blast effects shall be considered if blast is one of the major hazards from a pressure system failure. The primary blast is caused by the sudden release of the pressurized medium. The following characteristics of blast shall be considered:

6131 Effects of Ambient Conditions. Ambient pressure, temperature, and density are known to affect the pressure-time distance histogram from a blast wave. In general, these influences are not great; however, these effects shall be assessed specifically for the facility environment, as appropriate.

6132 Incident Wave. The hazards posed by incident blast waves from failed systems shall be evaluated.

The pressure blast loading experienced by an object or structure is not the incident pressure but the reflected pressure which results from the interaction of the side-on blast wave with the object.

6133 Reflected Wave. The effects of regular reflected blast pressure and irregular blast pressure shall be evaluated by any or all of the following methods: experimental test data, theoretical solutions. numerical methods, provided that the user can demonstrate that the method(s) used are appropriate.

The location of the triple point (intersection of incident, reflected, and fused wave from blast) relative to siting of personnel shall be determined. Buildings and structures designated as secondary receptors shall be considered to offer no protection or wave reflection capability.

6134 Dynamic Pressure. Dynamic pressure, associated with the wind effects or flow of air with the passage of shock waves, shall be evaluated for hazards from blasts.

6135 Scaling Laws. Scaling Laws may be utilized in the analysis of blast hazards.

6135.1 Scaled curves of blast wave properties shall be a conservative or upper bound estimate.

6135.2 For explosions some distance away from the ground surface, the effect of the Height of Burst

Copyright ASME International
Provided by IHS under license with ASME
No reproduction or networking permitted without license from IHS
Not for Resale

(HOB) shall be considered in determining the blast wave parameters at the ground.

6135.3 Normal environmental changes in ambient pressure and temperature usually have little effect on air blast, but where appropriate, such as for bursts considerably above sea level, adjustments for ambient density shall be made.

6136 Source Effects. Source System Effects shall be considered in blast hazards (see para. 6200).

6136.1 Dimensional Effects. Source geometry usually has significant effect on the near-field blast wave properties and shall be considered.

6136.2 Sequential Explosions. Explosions may occur simultaneously or sequentially. Multiple ruptures or explosions shall be considered to be additive. Sequential explosions can either cancel or enhance the effect of blast pressure, depending upon the timing and distance between the sources; however, this phase relation cannot usually be predicted in accidental explosions, and hence the effects shall be assumed to be additive unless it can be demonstrated with a reasonable degree of engineering certainty that they are separate events.

6136.3 Source Media. Source media shall be evaluated. When the media in a pressurized system are flammable, the potential explosion energies may be significantly higher than those of high explosives because of the much higher heats of combustion for many compressed substances. Therefore, the analysis of the effect of energy release on facilities and personnel must account for the characteristics of the source media.

6137 Receptor Effects. Receptor effects shall be evaluated. The true blast loading of a receptor is neither defined by the free field or reflected blast wave properties but rather by the complex processes of shock wave diffraction and transient drag. As a wave strikes an object (a receptor), a portion is reflected from the front face and the remainder diffracts around the object. In the diffraction process the incident blast wave closes behind the receptor, greatly weakened locally, and a pair of trailing vortices is formed. Rarefaction waves sweep across the front face attenuating the initial reflected blast wave. After passage of the front, the object is immersed in a time-varying flow field. Maximum pressure on the front face during this drag phase of loading is the stagnation pressure.

6138 Secondary Explosions. For flammable media, the possibility of unconfined cloud explosions, following the dispersion of the contents upon a system (vessel, tank, piping, etc) failure, is an additional area of concern; therefore, secondary explosions shall be considered.

6140 Fragmentation and Missiles

When high energy pressure systems fail, part or all of the system or fragments or missiles composed of the vessel or media may present a risk of being violently displaced and/or ejected. These are referred to as primary missiles or fragments. Secondary missiles or fragments may result from secondary effects such as air blast/explosion interaction with a structure or spalling as a result of missiles striking an object. Vessel fragmentation into small pieces is characteristic of high energy explosives whereas fragmentation into a few or numerous chunky pieces is more characteristic of the rupture of high energy pressure systems. Even at relatively low pressures, the effects of such ruptures may be devastating, propelling significant masses to large distances (hundreds of meters). Fragmentation and missiles shall be evaluated to determine the hazard and required protection against missiles such as:

6141 Missile Velocities. Primary (fragments from the failed pressure system, system structure, and media) and secondary (parts from structures impacted by primary fragments) missile and fragment initial velocity shall be determined using one or more of the following methods: experimental test data, theoretical solutions, or numerical methods

The user is responsible for ensuring that the method(s) used cover the parameters of the missile's generating mechanism such as:

(a) contained medium;

(b) gas pressure system characteristics (material, geometry, and specified operating and postulated unusual conditions).

6142 Velocity Retardation. Drag (and lift) effects shall be determined in the calculation of fragment trajectory or terminal velocity using one or more of the following methods: experimental data, theoretical formula, ornumerical methods that have been documented for the range of parameters or the range of fragmentation of the pressure system or secondary fragments that are to be evaluated.

Copyright ASME International
Provided by IHS under license with ASME
No reproduction or networking permitted without license from IHS Not for Resale

6143 Missile or Fragment Size. Controlled fragment size can be incorporated into a design by way of restraint, geometry, and material. Operating conditions such as temperature can influence whether numerous small fragments are generated or only a few large ones. Some components, such as valve bonnets, closures, intersections, and pressure systems designed by leak before break criteria (where component jetting and tearing predominate), have relatively predictable directions and masses.

The size distribution of the fragments from the pressure system's rupture (mass and geometry for both sharp and blunt fragments) shall be determined based upon existing experimental, theoretical, or numerical methods that have been verified for the range of parameters to be covered in the evaluation. Alternatively,

(a) tests may be performed to cover the range of parameters to be evaluated, or

(b) both small and large masses should be evaluated for both mass and geometry for single components between node points where node points are boundary value zones defined by known restraints.

6144 Missile/Fragment Distribution. Missile/Fragment Distribution shall be evaluated. Pressure system characteristics, particularly geometry, restraints, boundary conditions, and component characteristics, frequently define axes, planes, or regions in which fragment severity will be reduced; hence, it is permissible to consider, only these directions as defining potential areas of reduced missile impact. Any permanent structure which can be shown to be capable of completely stopping or preventing fragments from entering a certain area may be considered a protective barrier. See paras. 6400 and 6500.

6145 Missile Range. Missile range shall be evaluated.

6146 Impact/Terminal Ballistics. The impact of missiles must be evaluated for each of these hazards

(a) as primary effect to strike personnel directly

(b) as a structural impact that produces secondary missiles through scabbing and spalling and may also retain a residual velocity upon penetration

(c) global structural damage as a result of missile impact

The impact of missiles must be evaluated for each of these effects.

6147 Media Ejection/ Dispersion. Jets of gas or liquid or solid particles resulting from the pressure system failure (as well as fluid slug ejection) shall be considered with respect to missile impact, media dispersion, and siting and with respect to protection for personnel and structures.

6148 Blast Generated Fragments. The effects of missiles generated by blast waves shall be evaluated with respect to missile impact and siting protection for personnel and structures. Refer to para. 6300.

6150 Ground Motion Effects

Ground Motion Effects shall be evaluated as posing a hazard from possible release of a high energy pressure system. Refer to para. 6333.

6160 Heat Effects

Heat Effects shall be evaluated from radiant heat, fire balls, and fire to identify the potential hazards to personnel.

6170 Chemical Effects

Chemical Effects shall be evaluated to identify the potential hazards to personnel.

6180 Radiation Effects

Ionizing Radiation Effects shall be evaluated to identify the potential hazards to personnel.

6190 Biological Effects

Biological Effects shall be evaluated to identify the potential hazards to personnel.

6200 ESTIMATING THE MAGNITUDE OF HAZARDS RELEASE

Potential sources of hazards from pressure system failure shall be analyzed based upon both pressure systems and component specifications and design data and evaluated with respect to the following:

(a) contained media types with respect to kinetic energy and degenerative effects;

(b) primary pressure system and component characteristics;

(c) potential mechanisms of failure;

(d) hazard release effects.

One or both levels of analysis for estimating the magnitude of the hazard release at the source that are provided in this Standard shall be used:

(a) Level I — without protective (mitigation) effects, and

Copyright ASME International
Provided by IHS under license with ASME
No reproduction or networking permitted without license from IHS
Not for Resale

(b) Level II — with protective (mitigation) effects.

Dissipation effects may be considered by the user of this Standard in Levels I and II hazards release analysis and they consist of pressure system and environmental factors or effects that reduce the magnitude of the hazards energy release. If the estimated magnitude of the hazard release at the source is unacceptable at both of these Levels of release analysis the design of the pressure system or the protective system or both shall be changed to reduce the effect of the hazards source energy release to acceptable levels. Protection or mitigation (protective systems) of the effect of hazards releases shall be accomplished by the design and use of structural, mechanical, chemical, electrical, etc. components or a combination of all types of components.

A protective system shall be used to reduce risk of hazardous release and shall not be used by, nor necessary for the pressure system to meet pressure system design requirements (except as noted in para. 6010, Item #3). Protective systems shall be documented according to Section 6000 and concurrently with the system requirements in Sections 3000 and 5000.

6201 Level I (Release Analysis Without Mitigation Effects)

As a minimum, the effect of the hazard release without a protection system (without mitigation) shall be considered. However, upper bound to lower bound estimates of hazards magnitude (yield) may be assessed for dissipation effects. This analysis shall include an estimation of the effect of the total energy released from the failure including the energy contained in the blast wave, the fragments, and the thermal energy (from sources such as combustion). This estimate should be used to envelope the worst case conditions (with and without dissipation may be considered). Refer to Fig. 6020-1.

6202 LEVEL II (Release Analysis with Mitigation Effects)

Level II considers the effect of pressure systems failure hazards with a protective system (with or without dissipation) and shall be addressed if the results of the Level I analysis are not acceptable. This Level II analysis shall include protection (mitigation) and may include the considerations used in the Level I evaluation, with the added effect of dissipation of source energy and incident energy to receptors. Reduction of effects with distance from the failure may be taken into consideration as appropriate to the circumstances of the failure. Dispersion and dissipation modeling shall include estimated actual source energy yield, actual system breaching or failure mechanism, local topology, dispersion characteristics, and local meteorology.

6203 Redesign and Reanalysis

If the risk to personnel exceeds the tolerance limits described in para. 6400 after a Level II analysis, the system design must be changed until a combination of pressure system designs and/or protective system designs are found which will meet the limits with a Level I or Level II analysis. These design changes may include the design of protective systems utilizing containments, barriers, shelters, vents, dikes, vaults, fire suppression systems, neutralizing agents or other devices for the protection of equipment or personnel. The approaches to the reduction of the effects of failure shall be included in the hazardous release assessment Level I and II evaluation. Refer to Fig. 6020-1.

6210 Contained Media Types

The contained media shall be described by the state variables and the inherent danger in the medium itself, which could affect

(a) the integrity of the pressure system

(b) its available energy

(c) the mechanisms of failure

(d) the mechanism of escape of the medium from its containment system

Types of media states include gas, liquid and solid. Types of media are described as chemical, radioactive, and biological, or by its thermal parameters (kinetic and degenerative parameters).

6211 Chemical Media. The user shall evaluate the chemical properties of hazards including significant inventories of flammable materials, combustible materials, unstable materials, toxic materials and inert gases. In addition, highly reactive reagents, products, intermediate products and by-products shall also be evaluated. Reaction rates especially sensitive to impurities and process parameters shall be considered as part of this assessment.

If a contained medium is inert, the user is not required to evaluate the effect of generated ignition and combustion on failure and on the surrounding buildings, facilities, operational staff, and general public. Other hazards shall be evaluated to assure damage is consistent with established safety policies. In determining hazardous characteristics, the user shall include evaluation of containment, shelters, barricades and other

Copyright ASME International
Provided by IHS under license with ASME
No reproduction or networking permitted without license from IHS
Not for Resale

structures. The user shall account for both primary and secondary hazards.

If a contained medium is toxic, the user shall consider the potential adverse physiological effects on nearby personnel, and the effects on protective or strategic equipment, which may result from the rupture of the containment boundary. For toxic media, both leaks and catastrophic failures are of concern. Both the degree of toxicity and the threshold limits applying to exposure shall be considered.

If a contained medium is flammable, combustible or unstable, additional consideration shall be given to the processes that may lead to catastrophic failure. As a minimum, this includes the appropriate addition of the chemical reaction energy to the rupture energy for system and barricade considerations.

6212 Radioactive Media. If a contained medium is radioactive, consideration shall be given both to the effect of the release of the media and to the potential deleterious effects of the radioactivity on the container material and personnel in close proximity during operation. Additional shielding or barricading, shelters, containments, or other procedures to mitigate the effects of radiation on the container, personnel, or the environment shall be considered as part of the evaluation.

6213 Temperature or Thermal Reaction. If a contained medium is extremely hot or cold, consideration shall be given to the unique properties which may be exhibited at these limits and the associated effects on containment materials, and in the event of failure, on the surrounding facilities and personnel.

6214 Biological Media. If a contained medium is a biological hazard, consideration shall be given to deleterious effects on the container, personnel, inhibitor or neutralizers and the overall reactive nature of the media.

6220 Pressure System Characteristics

High energy pressure system characteristics shall be evaluated, which contribute to the overall safe operation including system material selection, dimensional considerations (shape of system, thicknesses, support locations, etc), location of components, component selection (valves, closures, nozzles, tube bundles, liners, etc), normal operating and emergency conditions, and types of components.

6221 Material Selection. The container materials shall be evaluated for compatibility with contained media with special attention to failure modes, failure mechanisms, material failure criteria, types of failure (catastrophic breach versus leak), limitations on use or past history of failures, experience with degradation of material (such as corrosion or embrittlement) in service and failure characteristics. Consideration shall be given to operational, test, emergency, faulted, and upset conditions which may be expected to occur during system lifetime. In addition (with respect to estimating the magnitude of hazardous release), recommendations shall be developed for the in-service inspection of materials during their expected lifetime with methodology suggested to evaluate remaining lifetime and site specific risk reduction based on inspection results, operating history and experience with likely failure mechanisms. See para. 6422C.

6222 Arrangement or Location. Arrangement characteristics of a high pressure system shall include consideration of the location and orientation of the pressure vessels and components within the overall system it supports based on an assessment of the system and components' failure modes, effects and consequences. The assessment shall consider placement of high energy pressure components at orientations or at safe distances from personnel, critical equipment, or other high hazard components such that they may be affected by the failure to a limited extent consistent with applicable safety requirements. If containments, barriers or other methods of mitigation are used, they shall be addressed as part of the evaluation. The arrangement is important in processes where the process fluid is flammable/explosive (e.g. polyethylene plants). On the basis that "leak-before-break" is a fundamental design precept for high pressure equipment, it is important that consideration be given to the relative merits of protective systems such as "containment" vs. "barricading" from the point of view of dispersal of apparently small quantities of fluids which are flammable. Such leakage may be from joints and connectors on piping, fittings and vessels, as well as from the less likely crack which could signal a gross failure. Dispersal by natural ventilation is possible in a barricaded system, while a contained system may require forced ventilation (with the necessary safeguards against mal-operation). In both cases detection systems may be used to check that a build-up of flammable gas does not exceed the Lower Explosive Limit (LEL) for the fluid in air. Such consideration is especially important when the process equipment is at elevated temperatures at the fluids'

Copyright ASME International
Provided by IHS under license with ASME
No reproduction or networking permitted without license from IHS
Not for Resale

atmospheric boiling point. The results from the analysis of the failure effects and consequences may be used to design shelters, containments, barricades, protective systems, limit access to areas of relatively high probability of missile impact following failure, or other related operational constraint or approach to mitigate consequence. Examples of risk variations in a container are: cylinders tend to breach with an axial crack, openings produce stress risers, circumferential cracks are associated with circumferential discontinuity, closures are high risk failure location, and welds in general are riskier than the as-formed shell.

6223 Effect of Alternative Components. The need for protective systems may be reduced by selection of alternative primary (source) pressure system components. Protective system design and analysis shall be based upon a review of the likely failure modes, effects, and consequences and probability of failures of the components used in the construction of the primary system.

6224 Operating and Unusual Conditions. The assessment of normal operating and off-normal or upset conditions shall be considered when evaluating the potential effects of system failure. The evaluation of credible unusual conditions, which may occur during the systems' lifetime should be considered. Development of methods of failure mitigation shall be addressed for normal operation and routine off-normal conditions and may be developed for unusual conditions. Mitigation methods for failures resulting from unusual conditions shall be developed when the risk criteria for personnel and equipment in para. 6400 are exceeded.

6225 Types of Components. This list is not intended to enumerate all pressure systems that may be hazardous; hence, the user of this Standard shall evaluate the entire system for potential hazards.

Typical components that shall be considered when evaluating the necessity of protective systems are:

(a) mechanical seals such as gaskets (and protection such as welded seals)
(b) vessels (fixed and portable attached to fixed)
(c) pipes
(d) closures
(e) bolted flanges
(f) seals
(g) expansion joints
(h) valves
(i) pumps
(j) fittings
(l) heat exchangers
(m) pressure hoses
(n) couplers

6230 Modes, Mechanism, and Cause of Failure

The assessment of system, vessel, and component failure shall be based on past failure experience with similar systems and shall include considerations of unique aspects of the contained medium and expected operating environments.

The severity of system failures can be classified as:

(a) Class I. Catastrophic failures which destroy the integrity of the vessel or component necessitating its being scrapped. Such failures are accompanied by a rapid release of a large volume of the contained pressurized fluid.

(b) Class II. Critical or major failure which damage the vessel or component or cause property damage preventing normal operation and necessitating major repairs.

(c) Class III. Marginal damage or defects which may cause potentially dangerous failures such as defects which require remedial action and where working conditions might result in a dangerous extension of a known defect.

(d) Class IV. Negligible failure or damage which probably would not affect operation and would result in negligible property damage and no personnel injury.

Section 2000 of this Standard provides a discussion of the various types of modes mechanisms and causes of possible failures in high pressure systems that may pose a hazard to personnel, environment, and facility. Appropriate paragraphs of Sections 2000 and 5000 of this Standard shall be used with paragraphs in Section 6000.

Modes of failure which have a significant effect on the magnitude of hazardous yield, shall be assessed as either ductile rupture or brittle failure.

6231 Primary Causes of System Failure. The user of this Standard shall consider how a pressure system (and protective system) fails with respect to estimating the magnitude of the hazard as well as utilizing historical data in estimating risk. (See para. 6400). This Section is a summary of the typical factors involved. Appropriate design codes must be used for specific cases. Appropriate sections and paragraphs of this Standard must be used for specific cases. The primary causes of system and component failure are:

(a) Design. Failure may arise from design complexi-

Copyright ASME International
Provided by IHS under license with ASME
No reproduction or networking permitted without license from IHS
Not for Resale

ties which lead to stress discontinuities. The addition of stationary and non-stationary thermal stresses further compounds the problem. As the temperature of the vessel wall does not rise at the same rate as that of the penetrating pipes, the different thermal expansions result in unique off-design conditions and possibly to critical stress risers.

(b) Material Selection. The design of vessels for high pressure requires the use of high strength materials where meeting fracture toughness is critical. The properties of steel and non-ferrous metals may be affected during fabrication by hot or cold work, by welding and by heat treatment. Such effects shall be considered in selecting the material of stressed parts. Where the vessel has to operate under corrosive or high temperature conditions, any possible reduction in creep rupture and fatigue properties shall be taken into account.

(c) Imperfections. Pressure vessels contain stress concentrations both by design and accidentally in the form of imperfections. These imperfections may exist in the materials used (variation in metal structure) and they may be introduced during fabrication. They can also be formed and increased in size due to fatigue, corrosion, and creep. An important failure condition in all these cases is the critical stress at which the imperfections will begin to extend in an unstable manner. This critical stress decreases with the size and severity of the imperfection and with a decrease in fracture toughness of the material. Corrosion can lead to failure by causing thinning of the metal section and so over-stressing. The most common form of failure associated with corrosion is that of stress-corrosion cracking (SCC) in which a crack can propagate rapidly under the combined action of applied stress and a critical environment. An example is hydrogen-assisted stress-corrosion cracking. The corrosion product, either internal or external, can also weaken or embrittle the metal. Hydrogen-related failures merit serious attention.

(d) Fabrication. The quenching and tempering heat treatments sometimes applied to metals for strengthening purposes can lead to cracking. Even simpler heat treatments frequently used to relieve residual welding stresses can produce cracks. These stress relief cracks have been associated with the thicker sections commonly found in high pressure applications. High strength materials are susceptible to the various forms of weld zone and heat-affected zone cracking. The various zones of the welded joint can have a reduced fracture toughness if the weld metal is not of the optimum type or if the temperature rise in the heat-affected zone is not controlled to avoid adverse effects on the parent material. Non-destructive evaluation (NDE) may be performed over high risk areas to provide for tolerable risk per para. 6400. NDE methods include dye penetrant, ultrasonics, acoustic emission, eddy current, x-ray, thermography, etc.

(e) Operation. Pressurized equipment may suffer unexpected loading in the hands of maintenance or operational personnel and surveillance of their procedures is recommended. Improper handling of a pressure vessel or pipeline can cause local damage sufficient to lead to failure. It is necessary to ensure that handling by cranes or other equipment does not leave severe scratches, gouges, or dents in the metal. Inappropriate support can lead to stresses very different from the design condition. If the pressurizing medium is flammable or toxic, the vessel should be vented into a safe location. If the risk is unacceptable, the vessel shall also be positioned such that if part of the end closure is ejected as a projectile, it follows a trajectory which will minimize damage to other critical components and avoid injury to personnel and/or its flight is halted by a barricade. It is important to incorporate pressure relief valves or rupture disks into high pressure systems to guard against the potential dangers associated with the malfunction of a pressurization system. The design of any system of valves shall be such that no dangerous situation can arise even if there should be a sudden and unexpected loss of power while the pressure system is in operation. Care shall be taken to ensure that it is not possible to trap pressure fluid in any region of the system assembly. Periodic inspections and close control of operating procedures shall be maintained in order to prevent the failure or malfunction of valves. Backup cooling systems or other safe operation shutdown systems should be installed if these are considered necessary to avoid safety hazards posed by the failure of a cooling system and the resulting overpressurization. Additional guidance concerning the operation of high pressure systems is given in Section 5000 of this Standard.

(f) Maintenance, Inspection, and Repair. (Refer to Section 5000). Care shall be taken to avoid introducing new defects, overloads or unsatisfactory material on the occasion of any repair, recertification, modification or alteration to an existing system or its components. Proper and periodic maintenance and inspection is important to continued equipment safety. Planned maintenance and inspection procedures shall be implemented (see applicable paragraphs of this Standard in Sections 3000 to 5000) to detect such problems in pressure systems before they become critical and lead to a

Copyright ASME International
Provided by IHS under license with ASME
No reproduction or networking permitted without license from IHS
Not for Resale

catastrophic failure. Threaded or bolted joints can be subject to improper assembly. Consideration shall be given to the consequences of failure of such joints (see para. 6422C).

6232 Secondary Causes Shall Be Evaluated

(a) Secondary Missiles/Impact. Damage to a pressure system caused by projectiles can directly or indirectly lead to system or component failure. The effect of impact of solid missiles on pressure components is influenced by many parameters. These parameters are associated with either the missile or the receptor. They are:

(1) missile parameters
  (a) weight of missile
  (b) size of missile
  (c) velocity of missile
  (d) deformation of missile
  (e) angle of impact between missile and receptor surface

(2) receptor parameters
  (a) receptor thickness
  (b) receptor strength (reinforcing)
  (c) receptor deformability (material properties)

Information concerning the blast fragment velocity and size, energy containment, and identification of the hazard zone can be found in paras. 6100, 6500, and 6300 of this Standard.

(b) Secondary Blast / Shock Wave. The release of contained energy presents the possibility of initiating a secondary failure in the surrounding pressure systems. Each individual unit system shall be evaluated to determine if isolation to protect it from external events is necessary. The damage to pressure systems caused by a shock wave may be preliminarily estimated by assuming that it is the same as that caused by the detonation of an amount of TNT that will release an equivalent amount of energy. A separate discussion on blast hazards and the factors which affect the magnitude and distribution of blast loads is included in para. 6100 of this Standard. The structural damage caused by pressure and wind blast is dependent on the peak pressure, the impulse and the duration, as well as the structural integrity of the target.

(c) Ground Motion or Shock. The release of energy from secondary pressure systems may result in primary or secondary ground motion or shock. Each individual unit system shall be evaluated to determine if isolation to protect it from external events is necessary. (See paras. 6150 and 6333.)

(d) External Degenerative Effect.

(1) radiant heat and fire ball
(2) fire
(3) chemical
(4) radiation
(5) biological

6233 Effects of Media Shall be Evaluated. A process fluid or pressure transmitting medium can adversely affect the integrity of a pressure vessel in two ways. Firstly, it can result in bulk corrosion of the vessel wall. Secondly, it can change the properties of the vessel material in the region of the surface wall such that there is a risk of a brittle fracture even in a vessel which would otherwise have been considered to be made of a ductile material. Bulk-corrosion of a pressure vessel becomes more pronounced at high pressures. High pressure may initiate stress corrosion and increase the rate of reaction.

6234 Probability and Risk Assessment Shall Be Evaluated. Risk assessment includes the estimation of the probability that some potentially dangerous event will occur and what the consequences of the failure will be. The probability of failure may be qualitatively or quantitatively estimated using a variety of hazard evaluation procedures. These hazard evaluation procedures may include a hazard and operability study, failure modes effects, and criticality analysis or human error analysis. An assessment of the risk of operation of a given system should be completed based on appropriate safety requirements. See para. 6400 and note para. 6422.3.

6240 Hazards Release Effects

The evaluation of hazard release effect (magnitude of yield) shall consider the wide variety of consequences which may result from the failure. These results include structural failure from the effect of over-pressure from a blast wave, secondary failure due to impact of fragments, structural damage or personnel injury from impact of primary or secondary fragments, fires, explosions, dispersion of toxic material, dispersion of highly reactive material, and dispersion of radioactive materials.

6300 PERFORMANCE CRITERIA FOR PERSONNEL, SECONDARY, AND PROTECTIVE SYSTEMS

The purpose of this paragraph is to provide performance criteria in terms of tolerance limits or threshold limit values (TLV) for personnel and performance criteria of protective systems to protect personnel against

Copyright ASME International
Provided by IHS under license with ASME
No reproduction or networking permitted without license from IHS
Not for Resale

TABLE 6300-1A PERFORMANCE CRITERIA VALUE (FUNCTIONALS)

Hazards		Receptors					
		Primary (I)		Secondary (II)		Protective (III)	
Group	Type	Personnel, *P*	Strategic Equipment, *E*	Hazardous Material, *H*	Building, *B*	Protective Systems, *S*	Affecting Variables
A: Force/Motion	Fragment/missile	F^P_{ij}	F^E_{ij}	F^H_{ij}	F^B_{ij}	F^S_{ij}	*M, U(t), R*
	Blast	B^P_{ij}	B^E_{ij}	B^H_{ij}	B^B_{ij}	B^S_{ij}	*P(t), R*
	Ground motion	G^P_{ij}	G^E_{ij}	G^H_{ij}	G^B_{ij}	G^S_{ij}	*V(t), R*
B: Degenerative	Heat/Fire	H^P_{ij}	H^E_{ij}	H^H_{ij}	H^B_{ij}	H^S_{ij}	*TLV, T, R*
	Chemical	C^P_{ij}	C^E_{ij}	C^H_{ij}	C^B_{ij}	C^S_{ij}	*TLV, R*
	Radiation	R^P_{ij}	R^E_{ij}	R^H_{ij}	R^B_{ij}	R^S_{ij}	*TLV, R*
	Biological	b^P_{ij}	b^E_{ij}	b^H_{ij}	b^B_{ij}	b^S_{ij}	*BLV, R*

GENERAL NOTES:
(a) *BLV*=Biological Limit Values, *M*=mass, *P*=pressure, *R*=distance, *T*=Temperature, *TLV*=Threshold Limit Values, *t*=time, *U*=displacement
(b) "i" is a subscript to denote severity level (I, II, III, IV). It also denotes the type of exposure, load, measurement, parameters, or functional with "j" that sets a limit criteria for severity.

TABLE 6300-1B EXAMPLES OF RECEPTORS

Receptors		
Primary (I)	Secondary (II)	Protective (III)
(a) Personnel	(a) Buildings	(a) Protective Structure
(1) work dwelling areas	(1) inhabited	(1) containment
(2) travel ways	(2) uninhabited	(2) barricades
(3) shelters		(3) shelters
	(b) Hazardous Material	
		(b) Protective Systems
	(c) Strategic Equipment	

the hazard effects of a possible failure of a high energy pressurized system. A high energy pressure system is a pressurized vessel, piping system and/or components that contain a working medium with a total hazard and energy content of sufficient risk of injury or damage which is sufficiently high to warrant the specification of a safe working distance for personnel and the use of a protective system or both. Protective systems range from liners and restraints to enclosures such as containment, barricading, sheltering, inhibiting, or suppression systems. See paras. 6400 and 6500.

Performance criteria mean the citation or specification of tolerable limits of exposure of personnel or structures to external conditions such as force, displacement, or other parameter(s). A tabulation of performance variables as a function of hazards and receptors (of these hazards) is provided in Tables 6300-1A, 6300-1B, and 6300-1C. When a high energy pressure system fails, the system energy becomes available to do external work. For the case of a catastrophic failure of the high energy pressure system, the energy available to do external work is divided between the kinetic energy of the system fragments (structural and internal medium) and the energy of the blast wave. Paragraph 6300 covers the use of the system hazards and parameters determined in paras. 6100, 6200, and 6500 with 6300 in order to determine:

(a) the siting of personnel and structures; and

(b) the performance of protective systems (types are discussed in para. 6500) where required to mitigate or interdict hazards that may cause injury or damage to personnel and property.

6310 Estimating the Magnitude of Hazards Yield

In para. 6100, the user of this Standard shall determine which hazards are present at the facility, and their relative location and begin the process of analyzing their effect. In para. 6200 the magnitude of yield from the source to the range at which the hazard poses negligible effect or the boundaries of the facility shall be computed for each hazard. Next, risk to personnel and strategic equipment (para. 6400) is assessed using

Copyright ASME International
Provided by IHS under license with ASME
No reproduction or networking permitted without license from IHS
Not for Resale

TABLE 6300-1C EXAMPLES OF PERFORMANCE CRITERIA

Preformance Criteria	
Force / Motion	**Degenerative**
(a) Fragment Missile; *i* (personal missile hazard) = 1, 2 1 = penetrating 2 = nonpenetrating *i* (general missile hazard) = *p, g, s* 1 = *p* = perforation 2 = *g* = global 3 = *s* = shatter *j* (missile hazard) = 1, 2, 3, 4 1 = Class I 2 = Class II 3 = Class III 4 = Class IV (b) Blast *i* (blast hazard) = 1, 2, 3 1 = pressure 2 = impulse 3 = db *j* (blast hazard) = 1, 2, 3, 4 1 = Class I 2 = Class II 3 = Class III 4 = Class IV (c) Ground Motion *i* (velocity, distance, wave type) *j* (Class I, II, III, IV)	TLV = Threshold Limit Value = *j* (for personnel) = *j* [Class I, II, II, IV (general)] *i* = Categories: BLV = Biological Limit Value C = Ceiling Limit STEL = Short Term ExposureLimit TWA = Time Weighed Average (a) Heat and Fire (1) Burn Injuries Criteria (a) *i* = 1st, 2nd, 3rd, 4th degree burns (for personnel) (b) *j* = Class I, II, III, IV (general) (c) *i* = 1 = skin temperature 2 = air temperature 3 = heat flux (b) Chemical *i* (chemical) = 1, 2, 3, 4 1 = ppm 2 = mg/m^3 3 = Quantity (internal / external) *j* (toxicity) = 1, 2, 3, 4 1 = Severe 2 = Moderate 3 = Slight 4 = None (c) Radiation *i* (radiation ionizing) = 1, 2 1 = dosage 2 = body burden (external / internal) *j* (radiation dosage body part) = 1, 2, 3, 4, 5, 6 Class I = 1, 2 Class II = 3, 4 Class III = 5 Class IV = 6 (d) Biological *i* (biological) = 1, 2, 3 (internal / external) *j* (biological) = Class I, II, II, IV

the severity performance criteria from para. 6300 and risk criteria from para. 6422.

6320 Siting Risk Classification

The user of this Standard shall evaluate the siting risk classification. Obtaining an acceptable siting risk classification may be an iterative process. The site classification may be changed by primary system design and location changes, hazard and yield changes (para. 6200), protective system design changes (para. 6500) and risk analysis criteria (para. 6400).

6330 Receptor Performance Criteria

Hazards that are to be considered which may result from high energy pressurized systems failure are

(a) Kinetic Energy (fragmentation, blast, ground motion)

(1) missiles from the pressure system

Copyright ASME International
Provided by IHS under license with ASME
No reproduction or networking permitted without license from IHS
Not for Resale

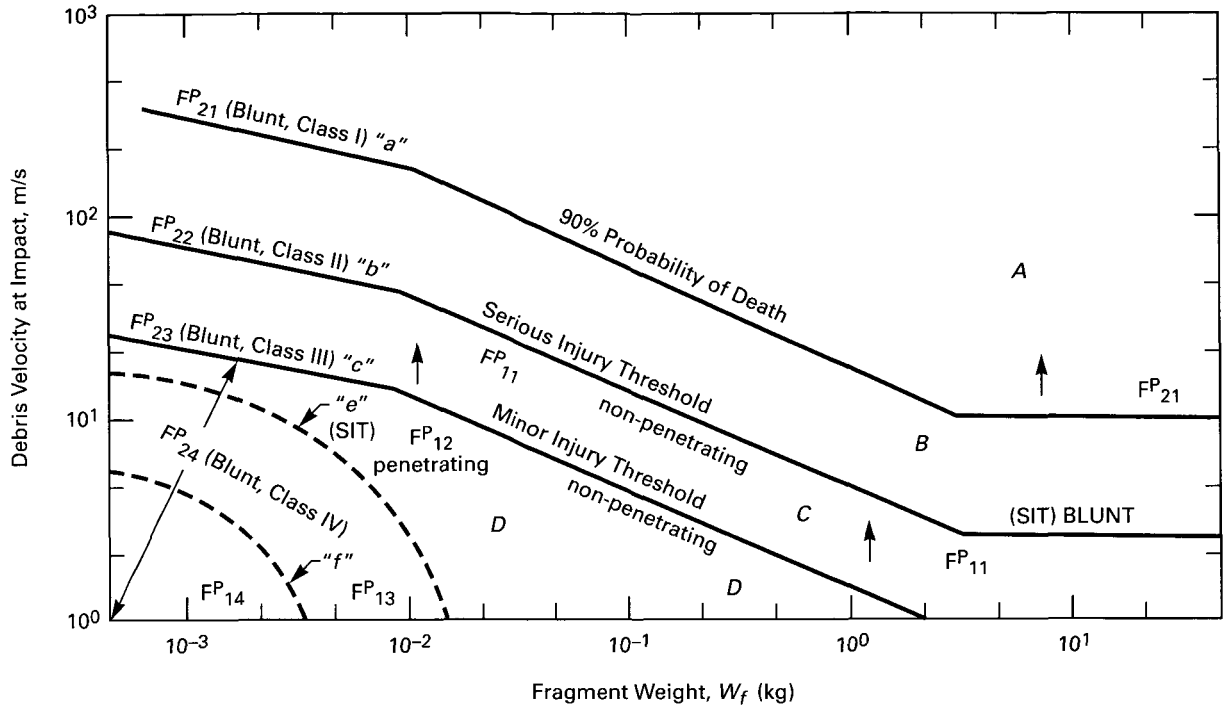

GENERAL NOTE: (——) Non-Penetrating (– – – –) Penetrating

FIG. 6300-1 PERSONNEL RESPONSE SEVERITY TO FRAGMENT IMPACT

(2) ejection of the media
(3) blast wave pressure
(4) missiles initiated by the blast wave
(5) secondary missiles and blast resulting from initiation by the primary missiles and/or blast wave
(6) secondary missiles from damaged structures (spalling and scabbing)
(7) ground shock

(b) Degenerative Hazards
(1) heat
(2) chemical
(3) radiation
(4) biological

The identification and determination of the distribution of energy between primary missiles, blast, and energy dissipation is covered in paras. 6100 and 6200.

6331 Fragmentation and Missile Hazards

6331.1 Personnel (Primary Receptor) Severity Criteria. Severity of impact missiles or fragments to personnel from a system rupture or secondary fragments are grouped into two hazard consequence severity categories (see Fig. 6300-1):

(a) non-penetrating (or blunt) missiles type (2) — Severity (F^P_{2j}) Classes I, II, III, IV, and

(b) penetrating type (1) — Severity (F^P_{1j}) classes I, II, III, IV.

Penetrating missiles are generally described as sharp (may cut skin, such as broken glass) or pointy (with a minimum tangent angle of adjacent surfaces as 70 deg or less).

The missiles that pressure system failures produce are usually blunt missile surfaces or non-penetrating surfaces which are not sharp or pointy.

The F^P_{1j} tolerance limit for penetrating (Type 1) missiles impacting personnel shall be fragment mass-velocity combinations defined by the appropriate severity level regions in Fig. 6300-1 and event probability ranges with a Severity-Probability Code (SPC) equals 3 or greater, where SPC is defined in Table 6422A. In instances where it can be demonstrated that fragments or missiles may be considered classified as non-penetrating or blunt, the tolerance limit mass-velocity parameter, F^P_{2j}, for non-penetrating or blunt (Type 2) missiles and fragments impacting personnel shall be limited to those severity levels for combinations of mass and

Copyright ASME International
Provided by IHS under license with ASME
No reproduction or networking permitted without license from IHS
Not for Resale

TABLE 6422A SEVERITY / PROBABILITY CODE (SPC)

Severity of Hazard Consequence [Personnel (6431) and Secondary (6440)]		Event Probability [Source (6420) and Receptor (6430), (6440), and (6450)] [Note (1)]			
Class Category	Descriptive Word	*A* Frequent $\geq 10^{0} >$	*B* Probable $\geq 10^{-2} >$	*C* Occasional $\geq 10^{-4} >$	*D* Remote
		← events per year [Note (2)] →			
I	Catastrophic	1	1	2	3
II	Critical	1	2	3	4
III	Marginal	2	3	4	5
IV	Negligible	3	4	5	6

NOTES:
(1) Refer to paras. 6420 to 6450 for optional receptors to consider.
(2) Refer to para. 6422.1 for description of *A, B, C* and *D*.

TABLE 6422B RISK LEVELS

Severity, *S* / Probability, *P*				
S/P Code	*SPC* Code	Descriptive Word	Risk Level	Risk Assessment Code [Action Required (6430)] [Note (1)]
IA, IB, IIA	1	Critical	High	Imperative to reduce hazard to lower level before operational phase, if possible. Approval required to accept risk at this level. Otherwise, higher level reassessment or system redesigned.
IC, IIB, IIIA	2	Serious	Medium	Establish level of approval for risk acceptance. Otherwise, higher level of reassessment or system redesign.
ID, IIC, IIIB, IVA	3	Marginal	Low	Approval required when codes, standards, or other criteria are not followed. Otherwise, higher level reassessment or system redesign.
IID, IIIC, IVB	4	Moderate	Acceptable	Normal Code and Standards compliance per para. 6300.
IIID, IVC	5	Minor	Acceptable	Normal Code and Standards compliance per para. 6300.
IVD	6	Negligible	Acceptable	Normal Code and Standards compliance per para. 6300.

NOTE:
(1) Action required for paras. 6440 and 6450 are to be evaluated with respect to personnel and in the absence of risk to personnel may be set at the discretion of the user of this document.

velocity defined by the appropriate area in Fig. 6300-1 and event probability ranges with a Severity-Probability Code (SPC) equals 3 or greater, where SPC is defined in Table 6422A. For blunt missiles, Severity Class IV is defined by the area *D* below curve "*c*" (minor injury threshold), Severity Class III is defined as the mass-velocity region C (see curves "*c*" and "*b*"), Severity Class II as region B (see curves "*b*" and "*a*"), and Severity Class I as region A in Fig. 6300-1.

The tolerable limit for missile impact into personnel, F^P, shall be, Severity-probability Code (SPC) (see Table 6422A) equals 3 or greater. If personnel are located within SPC equal to 1 or 2 and Severity Class I through III, protection shall be provided and the zone of protection shall be reclassified accordingly.

$$F^P = F^P(m, u, t) = F^P(m, v)$$

where:
m = missile mass
t = time
u = displacement
v = velocity

Copyright ASME International
Provided by IHS under license with ASME
No reproduction or networking permitted without license from IHS
Not for Resale

6331.2 Secondary Receptor Severity Criteria. Secondary receptors shall be located (sited) or protected against missiles if their failure results in a hazard greater than Severity Class IV to personnel (primary receptors). Hence, protection shall be provided for secondary receptors that present severity — probability code (SPC) values 1 or 2 (see Table 6422B) for severity class I through III to personnel. The threshold level for minor damage shall be provided by the manufacturer or designer or both for:

(a) the strategic equipment, F^E, or hazardous material, F^H, or both., or

(b) buildings/structures, F^B.

Serious damage to the equipment or material refers to its threshold of missile impact to initiate a hazardous release by blast, missile, foundation motion, heat, ionizing radiation, biological, chemical agents. Serious damage to buildings or structures indicates the threshold for reduced structural load-carrying capacity by missile impact, at which major support beams or walls undergo sectional average yield, S_Y, stress intensity.

Fragmentation (missile) and blast loads are assumed to occur both singly and simultaneously to determine the effect on secondary receptors unless the secondary receptors are protected against one or both hazards.

Hazardous material shall be stored to protect it against missile impact and other hazards in accordance with storage compatibility mixing criteria and hazard classifications as outlined by the Department of Transportation (DOT), the Department of Defense (DOD), and the United Nations Organization (UNO) specifications (when not in conflict with DOD and DOT criteria).

Buildings or structures shall be considered as offering no protection against fragments unless evaluated as a protective structure; hence, inhabited buildings shall be located or protected by the guidelines or procedures outlined for personnel and the Severity Criteria specified in Fig. 6300-1. No restrictions are placed on the location of uninhabited buildings or structures with respect to specified siting or protection from missiles except that structural collapse or secondary fragments shall present no hazard of injury to personnel greater than severity Class IV. In general, protecting personnel against primary missiles (fragments) either by location or protective structures is usually sufficient to ensure that secondary missiles are not presented as a result of primary fragments striking adjacent structures. However, adjacent structures or uninhabited buildings that pose a potential threat to personnel by collapse shall be evaluated with respect to their major support columns, walls, and beams, where $B^B{}_p$ (cross-sectional primary membrane stress intensity) is less than S_Y for both normal membrane stress intensity and shear stress intensity and $B^B{}_S$ (primary membrane plus bending stress intensity) at the outer fiber is less than 1.5 S_Y, where S_Y is the yield stress. The impact shall be assumed plastic (i.e. no rebound). Of particular concern is the ejection of a large mass of fragments from an adjacent structure.

6331.3 Structural Protective Systems for Missiles and Fragments Severity Criteria. Structural protective systems used against missiles that result from a pressure system failure shall be designed to protect primary and secondary receptors against Severity Probability Code (SPC) values 1 and 2 for Severity Class I through III missile impact velocity and masses. There is no protection requirement for personnel at Severity Class IV. Protective systems shall be designed to resist all estimated kinetic energy from missile, blast, and ground shock load simultaneously and singly, unless it can be demonstrated that these effects cannot occur simultaneously or the system is designed for only one hazard and protection for the other hazards, if any, is provided by alternative means if necessary.

Because of the irregular nature of missile geometry, and hence uncertainty in predicting penetration or perforation, protective barriers shall be designed to prevent missile velocity retardation, and eliminate all residual velocity (V_r) once the missile perforates the wall. There are numerous mechanisms in which a missile may penetrate a protective structural wall, and these mechanisms are dependent upon the wall material(s) and dimensions (in addition to missile characteristics).

A structural protective system designed to prevent missile impact shall be evaluated for design adequacy with respect to the three following criteria:

(a) missile penetration, $F^S{}_p$

(b) structural adequacy of the overall structure (global effect) to withstand impact, $F^S{}_G$

(c) resistance to fracturing (spalling and scabbing), $F^S{}_S$, where $F^S{}_P$, $F^S{}_G$, and $F^S{}_S$ are defined in Table 6300-1.

In the case where it has been determined that a pressure system rupture may result in a range of fragment masses, weights, and geometry, an evaluation of the design adequacy of the protective system shall be performed with respect to both the blunt and piercing-configuration at the worst case combination of weight and velocity. For deterministic shapes such as postulated ejection of closures, valve bonnets, intersections, etc., both blunt and penetrating orientations shall be used to evaluate the design adequacy of the protective system. The protective system (containment, barrier, shelter)

Copyright ASME International
Provided by IHS under license with ASME
No reproduction or networking permitted without license from IHS
Not for Resale

shall be designed and classified as one of the following four severity classifications (see also para. 6422):

6331.3.1 Structural Protective Systems Severity Class IV. This is applicable to personnel (primary receptors) and offers the most stringent structural performance of the four classes. The full integrity of a shelter in this classification must be maintained. The percent missile perforation limit F^S_{P4} shall require the protective wall to dissipate two times the impacting missile K.E. (where K.E. = kinetic energy at a 50% probability penetration estimate or greater is used). The global linear membrane and bending stress intensity (excluding the local perforation or impact stresses) F^S_{G4} shall be limited to a maximum allowable stress intensity not to exceed

$$S_Y + \frac{1}{4}(S_U - S_Y)$$

where

S_U, S_Y = the dynamic yield and dynamic ultimate stress intensity of the wall material.

The formation of fragments from failure of the shelter or barricade (brittle mode behavior) shall not be permitted and appropriate limits for F^S_{S4} with respect to fracture stresses or adequate shielding shall be employed.

6331.3.2 Structural Protective Systems Severity Class III. This applies to protective systems that are used to protect secondary receptors. The formation of post-failure fragments due to the collapse of the protective system is prohibited here. Penetration of primary fragments and the formation of secondary fragments are allowed, but shielding is required if their severity classification exceeds those which can result in the damage to the secondary receptors which would result in a Severity-Probability Code (SPC) value of 1 or 2 for severity Class I through III threat to personnel. As discussed in the sections on secondary receptors (see para. 6331.2), the levels governing the sensitivity of secondary receptors (such as strategic equipment, hazardous material, and structures can only be defined based upon the characteristics of the secondary receptors as specified by the manufacturer or designer of the secondary receptors). F^S_{P3} is approximately equal to the 50 percentile probability of a missile perforating the wall with a residual velocity equal to zero (0.0). F^S_{G3} stress intensity (for linear membrane and bending stresses) through the protective barrier shall not exceed the stress intensity limit of $0.5(S_U + S_Y)$.

6331.3.3 Structural Protective Systems Severity Class II. This pertains to protective systems used for partial containment of strategic material and pressure components to protect secondary receptors and pressure systems (rupture sources). Controlled failure (deflections exceeding the incipient failure deflection) of the structural elements is allowed, thereby permitting post-failure fragment formation. The velocities of primary, spalled, and scabbed fragments must be limited to values such that secondary explosions or ruptures from the source failure are prevented. Barriers providing the protection for Severity Class II can be designed for both ductile and brittle behavior provided the energy of any fragments that are generated shall not cause a secondary rupture or explosion. The response criteria used for the donor barrier design will vary from limited deflections for protection of sensitive secondary receptors whose protective systems are designed to withstand the additive effects of more than one impulsive load, to total failure for protection of less sensitive secondary receptors, $F^P_{G3} < S$.

6331.3.4 Structural Protective Systems Severity Class I. This is similar to II (for secondary receptors) except that limited primary and secondary fragmentation is permitted. A total failure criteria is used for the design of the protective system in this category where F^S_{G1}, the stress intensity (for membrane and bending stresses through the protective wall) may exceed S_U (local impact stresses are excluded from this limit). F^S_{P1} and F^S_{S1} shall be specified or limited according to the sensitivities of the secondary receptors.

Documentation for protective systems shall be maintained in accordance with para. 6600 in order to provide traceability of the historic events and predict the remaining load carrying capability of the protective systems. Recertification or evaluation of the remaining system or component life shall be determined for protection severity Classes II through IV.

The performance evaluation of missile and fragment protective systems shall be estimated based on any or all of the following methods: experimental test data, theoretical solutions, numerical methods. The method(s) used shall be demonstrated to cover the parameters of the missile and protective structure's dynamic response mechanism such that material properties, geometry, boundary conditions, and coupling effects are accounted for within reasonable engineering certainty (approximately 10% is a conservative bound).

Alternatively, in the event that experimental, theoretical, and numerical predictive methods (that have been documented) are not applicable to predict the missile

Copyright ASME International
Provided by IHS under license with ASME
No reproduction or networking permitted without license from IHS
Not for Resale

impact and protective structural response, then the following alternative methods of evaluation are allowed:

(1) the performance of a test program that covers the range of parameters with respect to the protective system and missile characteristics for worst case impact;

(2) perform an estimation of structural response based upon simplified modeling assumptions which may be demonstrated to provide a conservative or upper bound estimate;

(3) limit the allowable stress intensity values for membrane and bending stress intensity in the protective structural wall to the elastic range.

6332 Blast Wave Hazards

6332.1 Personnel and Primary Receptor Severity Criteria

(a) Overpressure. Personnel severity classifications for overpressure B^P, which shall be used for personnel are specified as follows:

(1) Class I — 20 psi or greater

(2) Class II — 2.5 psi to 20 psi

(3) Class III — 0.2 psi to 2.5 psi

(4) Class IV — 0 to 0.2 psi

It has been shown through studies that higher levels of pressure may be sustained by personnel for short duration pressure pulses; hence, pressure impulse (I) may be considered as a variable in defining the upper limit of Severity Class IV, provided that this can be demonstrated for specific pressure-time-distance histograms to which personnel will be exposed.

The tolerance limit B_p, for blast wave loading (a pressure-time-distance load) on personnel shall be those values specified by severity Class I to IV for all SPC risk values 3, 4, 5, and 6. Protection shall be provided if personnel are located within SPC levels of 1 or 2, for Severity Classes I through III (see Table 6422).

The pressure-time-distance histogram from the failed pressure system shall be estimated based on any or all of the following methods: experimental test data, theoretical solutions, numerical methods. The method(s) shall be demonstrated to cover the parameters of the blasts (pressure-time-distance histogram) generating mechanism such that

(1) the contained medium

(2) the pressure system characteristics (material, geometry, and specified operating and postulated unusual conditions)

(3) environmental effects (such as ambient conditions, reflecting surfaces, multiple source, etc.) are accounted for within reasonable engineering certainty (approximately 10% is a conservative bound)

Alternatively, in the event that experimental, theoretical, and numerical predictive methods (that have been documented) are not applicable to the high energy pressure systems or components to be evaluated, then other methods of evaluation shall be allowed

(1) performance of a sufficient number of engineering tests to provide reasonable assurance that the consequences of such an event can be adequately predicted with respect to the protective system and blast pressure characteristics of worst-case loading

(2) an estimation of pressure-time-distance history based upon an upper bound limit formulation

(3) use of existing data that shall be demonstrated to be equivalent or a conservative estimate to the evaluated system

(b) Reflection. When a blast wave strikes a flat surface such that the velocity of the wave is normal to the surface, the pressure is referred to as a reflected pressure (P_r). The severity classification for personnel subjected to blast has been cited in terms of overpressure. The approximate values in terms of reflected pressure, which accounts for the presence of the personnel may be listed as follows:

(1) Class I—60 psi or greater

(2) Class II—5.4 psi to 60 psi

(3) Class III—0.3 psi to 5.4 psi

(4) Class IV—0 to 0.3 psi.

(c) Dynamic Pressure. The severity classification IV from a blast overpressure of 0.2 psi for personnel shall be considered a sufficient limit for protection against dynamic pressure (wind born) fragments from debris such as glass and objects under 10 lbs. For pressures above 0.2 psi, objects larger than 10 lbs., and structures classified as non-protective or both, shall be evaluated with respect to mass-velocity severity criteria for personnel and appropriate building structural criteria to resist the risk of injury to personnel (either occupying the building or structure or adjacent to the building or structure).

(d) Ground Motion Hazards. The effect of system explosion on ground motion and personnel response shall comply with the requirements of para. 6333.

6332.2 Secondary Receptor Severity Criteria.

Secondary receptors shall be located or protection provided for them against blast only in as much as they present a hazard greater than severity Class IV to personnel (primary receptors) for all probability events (see Tables 6422A and 6422B); hence, protection should be provided for secondary receptors that present SPC levels of 1 or 2 for Severity Class I through III for

Copyright ASME International
Provided by IHS under license with ASME
No reproduction or networking permitted without license from IHS
Not for Resale

personnel. The threshold level for minor damage should be provided by the manufacturer or designer for:

(1) the strategic equipment, B^E, and/or hazardous material, B^H, (serious damage to the equipment or material refers to its blast wave, B^E and B^H, threshold to initiate a hazardous release by blast, missiles, foundation motion, radiation, biological agents, chemical agents), or

(2) buildings or structures (B^B). Serious damage indicates the threshold for reduced structural load-carrying capacity by blast wave impact, with the consequences that major support beams undergo sectional average yield, S_y, stress intensity.

Fragmentation (missile) and blast loads are assumed to occur both singly and simultaneously to determine the effects on secondary receptors unless the secondary receptors are protected against one or both hazards.

Hazardous material shall be stored to reduce risk of blast to tolerable levels in accordance with storage compatibility criteria and hazard classifications as outlined by the Department of Transportation (DOT), the Department of Defense (DOD), the United Nations Organization (UNO) specification (when not in conflict with DOT and DOD criteria).

Buildings or structures shall be considered as offering no protection against blast unless evaluated as a protective structure; hence, inhabited buildings should be located (sited) or protected by the guidelines or procedures outlined for personnel in the severity criteria cited in para. 6332.1. No restrictions are placed on the location of uninhabited buildings or structures with respect to specified siting and protection from blast waves except that structural collapse or secondary fragments shall present no risk to personnel greater than Severity Class IV.

For reference purposes, the following four Severity Classes may be obtained from DOD 6055.9-STD for unstrengthened buildings (in terms of peak overpressure, for long duration blast loads):

(1) Class I total destruction—8.0 psi

(2) Class II — serious damage of approximately 50% destruction—3.5 psi

(3) Class III—20% damage—2.3 psi

(4) Class IV negligible damage—5% or less from 0 to 1.2 psi.

In general, the siting or protection of personnel against blast pressure is usually sufficient to insure that secondary missiles will not present a serious hazard.

6332.3 Protective Systems For Blast Severity Criteria. Protective systems used against blast pressures that result from a pressure system failure shall be designed to protect primary and secondary receptors against severity Class I through III pressures. Effects of ambient conditions, dimensional effects (e.g. long running crack type rupture versus point or source rupture), multiple explosions, reflection, dynamic pressure, confinement, and blast generated missiles shall be considered. There is no protection requirement for severity Class IV. A protective system shall be designed to resist both estimated missile and blast loads simultaneously and singly, unless it can be demonstrated that these effects cannot occur simultaneously or the system is designed only for one hazard. A protective system designed against blast impact shall be evaluated for design adequacy with respect to the pressure-time histogram loading. The pressure-time histogram loading of a structure has been associated with three parameters (singly or in combination) that are a measure of structural performance, these are:

(a) impulse, I

(b) pressure-time, $P(t)$

(c) peak pressure (static), P_S

A protective system for blast loads(containment, barrier, shelter) may be designed and classified according to the four following severity classifications (analogous to those in para. 6331).

6332.3.1 Structural Protection Severity Class IV. This is applicable to personnel and is the most stringent of the four classes. The full integrity of a shelter must be maintained. Blast generated missiles $B^S{}_{P4}$ shall be limited to $F^S{}_{P4}$ (see criteria for personnel F^P) in accordance with the requirements in para. 6331.3. Personnel must be protected against blast pressures, and excessive structural motions. The global stress intensities (linear membrane and bending stress) $B^S{}_{G4}$ shall be limited to a maximum allowable stress intensity not to exceed

$$S_Y + {}^1\!/_4\ (S_U - S_Y)$$

where

S_U, S_Y = the dynamic ultimate and dynamic yield stress intensities of the wall material

The formation of fragments (brittle mode behavior) shall not be permitted and appropriate limits for $B^S{}_{S4}$ with respect to fracture stresses or adequate shielding shall be employed.

6332.3.2 Structural Protection Severity Class III. This applies to protective systems that are used to protect secondary receptors. The formation of post-failure fragments due to collapse of the protective system is prohibited here. The formation of secondary fragments are allowed, but shielding is required if their

Copyright ASME International
Provided by IHS under license with ASME
No reproduction or networking permitted without license from IHS
Not for Resale

severity classification exceeds those which can result in damage to the secondary receptors which in turn would present a Severity Class I through III threat to personnel. As outlined in the sections on secondary receptors, the levels governing the sensitivity of secondary receptors (such as strategic equipment, hazardous material, and buildings) can only be defined depending on the nature of the secondary receptors as specified by the manufacturer or designer or both of the secondary receptors. B^S_{P3} for blast generated missiles is equivalent to the limits of F^S_{P3}. B^S_{G3} stress intensity (for linear membrane and bending stress intensities through the protection wall) shall not exceed the stress intensity limit of $0.5(S_U + S_Y)$.

6332.3.3 Structural Protection Severity Class II. This pertains to the protective systems used for partial containment of strategic material and pressure components to protect secondary receptors, protect other protective structures, and protect pressure systems from the loading effects of both blast generated fragments and high pressures. Controlled failure (deflections exceeding the incipient failure deflection of the structural elements is allowed where $B^S_{G2} < S_U$, thereby permitting post-failure fragment formation). The velocities of spalled and scabbed fragments shall be limited to values such that secondary explosions or ruptures are prevented. Barriers providing the protection of Severity Class II can be designed for both ductile and brittle behavior provided the energy level of any fragments generated shall be below the level which will cause a secondary rupture or explosion. The response criteria used for the donor barrier design will vary from limited deflections for protection of sensitive secondary receptors whose protective systems are designed to withstand the additive effects of more than one impulsive load, to total failure for protection of less sensitive secondary receptors, $F^S_{G3} < S_U$.

6332.3.4 Structural Protection Severity Class I. This is similar to II (for secondary receptors) except that limited propagation of system rupture or combustion or detonation of hazardous material is permitted. A total failure criterion is used for the design of the protective system in this category where B^S_{G1} (the stress intensity limit) for membrane and bending stress through the protective wall may exceed S_U, where S_U is the ultimate stress intensity for the wall material. B^S_{P1} and B^S_{S1} shall be specified or limited according to the sensitivities of the secondary receptors.

Documentation for the protective system shall be maintained in accordance with para. 6600 in order to provide traceability of historic events and predict the remaining load carrying capability of the protective system (see also para. 6500). Recertification or evaluation of the remaining system or component life shall be determined for protection Severity Classes II through IV.

The performance evaluation of blast pressure protective systems shall be estimated based on any or all of the following methods: experimental test data, theoretical solution, numerical solutions. The methods used shall be demonstrated to cover the parameters of the initial protective structures dynamic response mechanism such that material properties, geometries, boundary conditions, coupling effects, and blast pressure as a function of time and distance are accounted for within reasonable engineering certainty (approximately 10% is a conservative bound).

In the event that experimental, theoretical, and numerical predictive methods (that have been documented) are not applicable to predict the blast wave and protective structural response, the following alternative methods of evaluation may be utilized:

(a) Performance of a sufficient number of engineering tests to provide reasonable assurance that the consequences of such an event can be adequately predicted with respect to the protective system and blast pressure characteristics for worst-case loading.

(b) Perform an estimation of structural response based on simplified modeling assumptions which may be demonstrated to provide a conservative or upper bound estimate.

(c) Limit the allowable stress intensity values for membrane and bending stress intensity in the protective structural wall to the elastic range.

6333 Ground Motion Hazards. Ground shock from high energy pressure systems above or below ground pose a hazard to personnel via building or structure collapse or both. Ground shock may also cause a damaging release of secondary receptors. The design criteria for secondary receptors shall be evaluated to insure that they do not pose a SPC = 1 or 2 risk for Severity Class I–III to personnel. A displacement time-history (or response spectrum) analysis is recommended and ground particle velocity versus structural frequency limited according to the following criteria:

IV) Negligible Damage ≡ $O \le U \le 2$ in./sec
III) Minor ≡ $2.0 \le U \le 5.4$ in./sec
II) Major ≡ $5.4 \le U \le 7.6$ in./sec
I) Destruction ≡ $V > 7.6$ in./sec

Copyright ASME International
Provided by IHS under license with ASME
No reproduction or networking permitted without license from IHS
Not for Resale

6334 Heat. In the course of preparation. See Tables 6300-1A, 6300-1B, and 6300-1C.

6335 Chemical. In the course of preparation. See Tables 6300-1A, 6300-1B, and 6300-1C.

6336 Radiation. In the course of preparation. See Tables 6300-1A, 6300-1B, and 6300-1C.

6337 Biological. In the course of preparation. See Tables 6300-1A, 6300-1B, and 6300-1C.

6400 SITING RISK CLASSIFICATION

6410 Objective

The purpose of this paragraph is to provide a general procedure for assessing potential problem siting areas and planning appropriate actions. This Section provides means of estimating general qualitative values of risk, severity of hazardous consequences, and protection effectiveness. This Section identifies four areas that shall be evaluated:

(a) the facility (or system) relative to its surroundings
(b) the permanent location of personnel
(c) secondary equipment
(d) protective systems

This Section provides general information regarding the siting of systems protecting personnel and property against the effects of failure. A comprehensive probabilistic methodology is recommended as a means to provide a greater assessment of effects of system characteristics, historical data, source-receptor (facility). This Section is used after the hazards have been identified (para. 6100), and estimates of the hazards magnitude is performed (para. 6200), and the criteria for hazards exposure to personnel is assessed (para. 6300). If necessary, protective systems (para. 6500) may be utilized to reduce the risk of injury and damage.

6420 Facility Siting Classification

The vulnerability of personnel and structures at and beyond the facility boundary containing high energy pressure equipment should be evaluated in accordance with para. 6400 with respect to possible damage from the hazards as described in para. 6100 and discussed in this Section.

For an assessment of personnel and structures within the facility, this section may be used in concert with paras. 6430, 6440, and 6450. Intra facility studies should include the main building or enclosure, work areas, equipment areas, dwellings, and travel ways. Special attention should be paid to windows and other low strength or light weight structures as they can become secondary hazardous missiles.

A facility with high energy pressure equipment shall be assigned a Population Index (*PI*) and risk estimate.

6421 Population Index (*PI*). A probabilistic assessment of the high energy pressure system facility (or source) locations relative to the primary and secondary receptors is preferred. However, a simplified alternative method is a four class population index, PI_r, system (similar to ANSI B31.8 for gas transmission and distribution piping systems) which may be utilized for distances "r" from the hazard source (where "r" ≤ 0.25, 0.5, 5 miles, and use the number of ranges as appropriate for each hazard) and is listed below to establish the four probability estimates in para. 6422:

(a) Source Receptor (SR) Class 1 Locations. Class 1 locations include waste lands, deserts, rugged mountains, grazing land, farm land, and combinations of these provided however, that

(1) the ten mile density index for any section of the pressure system (vessel, pipeline, component) length is ≤ an average of 24 dwelling units per square mile per linear mile or alternately ≤ 50 ppsm (persons per square mile) within a constant radius "r" of a high energy pressurized system considered as a single source

(2) the density index for any one mile of length is 40 dwellings per square mile or alternately 100 ppsm (of constant radius (r) of the source)

(b) Source Receptor (SR) Class 2 Locations. Class 2 locations refer to those areas about a high energy pressure system with population density indexes greater than Class 1 and less than 500 ppsm.

(c) Source Receptor (SR) Class 3 Locations. Class 3 locations consist of occupied residential or commercial buildings in which the prevalent height of the buildings is three stories or less and population densities are greater than class 2 and less than 5,000 ppsm.

(d) Source Receptor (SR) Class 4 Locations. Class 4 locations include areas where occupied multistory (four or more floors above ground) are prevalent, where traffic is heavy or dense, or where there may be other high energy pressure system facilities and population densities are greater than Class 3 and greater than 5,000 ppsm.

6422 Risk Assessment. Risk assessment is a means of providing quantitative and qualitative measures of the potential severity of hazardous consequences and probability of injury or damage in order to guide decision making in the siting of receptors and identifying

Copyright ASME International
Provided by IHS under license with ASME
No reproduction or networking permitted without license from IHS
Not for Resale

the need for protection. The preferable method for performing a risk assessment is by probabilistic methodology. However, until such a methodology is incorporated into this standard, the following qualitative assessments shall be required:

6422.1 Probability Estimate. This is the likelihood that an identified source event hazard will occur and result in a mishap or receptor event based on an assessment of such factors as: location, exposure in terms of cycles or hours of operation, and population density and distribution. The probability shall be estimated as follows:

(a) Probability Estimate A. Likely to occur ≥ (greater than or equal to) 10^0 events/year or 1 event/year—source-receptor.

(b) Probability Estimate B. Probably will occur in time ≥ (greater than or equal to) 10^{-2} to less than 10^0 events/year or 1 event/1 year to 1 event/100 years—source-receptor.

(c) Probability Estimate C. May occur in time ≥ (greater than or equal to) 10^{-4} to less than 10^{-2} events/year or 1 event/100 years to 1 event/10,000 years—source-receptor.

(d) Probability Estimate D. Unlikely to occur < (less than) 10^{-4} events/year or 1 event/10,000 years-source receptor.

Two methods of probability estimate for source and/or receptor are provided for the user of this Standard to assess each hazard posed by each facility, system (or component). Each of the two methods will have a rating category of event probability estimate A, B, C, D. The above event probability estimate A, B, C, and D are roughly modeled on the frequency versus fatality for total natural events as shown in Fig. 6422.1.

Method #1 allows the user of this Standard to collect existing operational data from specific facility, system, or component which has operated in an acceptable manner and use this data to develop frequency versus fatality criteria curve and thus develop probability estimates A, B, C, D.

Method #2 is an alternative to Method #1, and allows the user to base his frequency versus fatality criteria curve on the natural events data for that location. The location may have risk of earthquake, or hurricane, or meteorites, or all known natural events, or only one. For example the meteorite curve in Fig. 6422.1 is a criteria used in many pressure system applications.

Other existing nearby facilities that may affect the frequency versus fatalities curve shall be included in Method #1 or Method #2 estimate criteria curve. The total natural events that are a basis for the area frequency versus fatality criteria curve shall be adjusted to require ten percent (or some selected value) less risk than the natural events. The "estimated" frequency versus fatality (or "severity") data may be adjusted to account for protection, inspection, maintenance, historical data, and will fall below the criteria curve.

6422.2 Severity Class. This is an estimate of the consequences defined by the degree of personnel injury, or property damage that could occur for each hazard (see para. 6110) severity classification shall be identified as follows:

(a) Severity Class I—catastrophic; may cause death or system destruction

(b) Severity Class II—critical; may cause severe injury, (severe occupational illness) or major property damage

(c) Severity Class III—marginal; may cause minor injury, (occupational illness) or minor property damage

(d) Severity Class IV—negligible; probably would not affect personal safety or health, and negligible property damage.

Severity classes should be mapped on a pressure system or facility layout for each identified hazard. For example, blast effects and fragment effects on personnel (severity classification is cited in the performance criteria, para. 6300) for both cases of without protection and with protection

A single number Severity—Probability Code (SPC) risk level shall be assigned to each combination of severity class and probability estimates as shown in Table 6422. This does not preclude the use of locally developed systems for risk assessment for special application. An SPC of 1 will be considered imminent danger and require immediate attention by way of re-siting or providing protective systems. SPC equal to 2 shall be considered serious and require priority attention. SPC' equal to 3, defines the threshold of tolerable risk, but may be serious. SPC equal to 4, 5, or 6 probably require local rather than global protection, and they may establish a scheme for prioritizing corrective action. SPC's of 4, 5, and 6, are possible for all severity categories, but are not shown in Table 6422.

6422.3 Effects of Maintenance and Inspection on Risk via Probability of Event. Periodic inspections and maintenance can have a significant effect on the SPC rating. The user of this Section shall consider the effects of periodic inspection and maintenance on the probability that an event will occur and optionally on the severity rating. The user of this Section must document the inspection and maintenance program used for site specific risk reduction

Copyright ASME International
Provided by IHS under license with ASME
No reproduction or networking permitted without license from IHS
Not for Resale

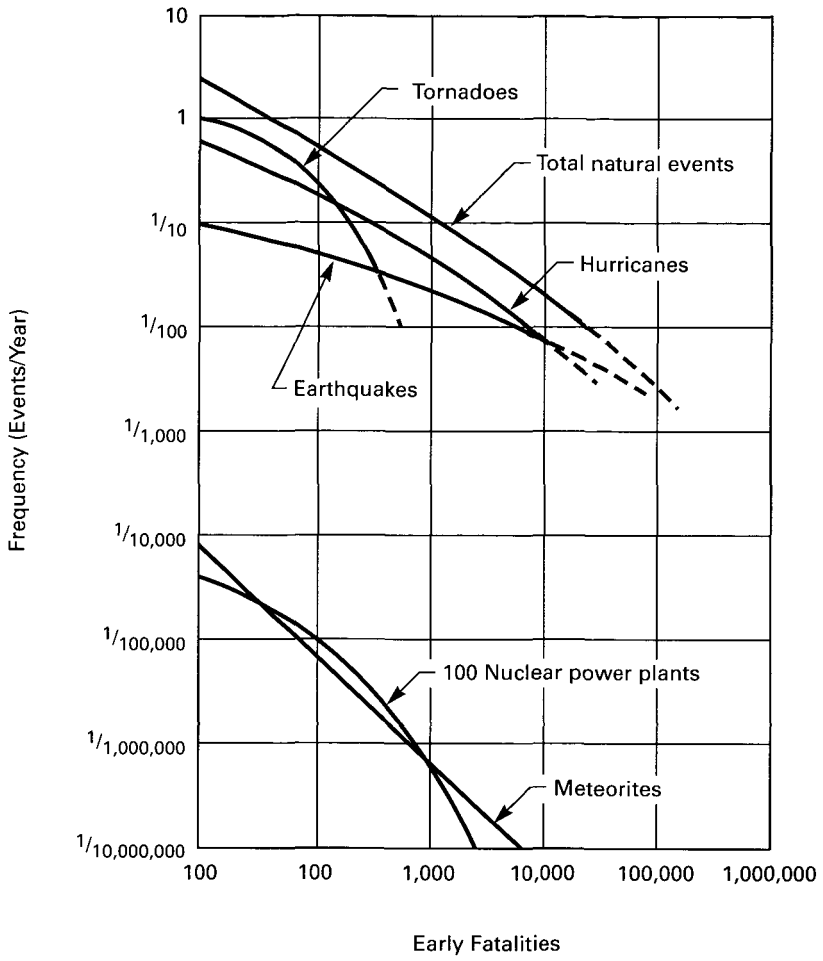

FIG. 6422.1 FREQUENCY VERSUS FATALITY FOR TOTAL NATURAL EVENTS

of hazardous consequences of system failure in accordance with para. 6600.

Section 3000 and para. 5400 provide examples of required inspections to meet the specified design life for the high energy pressure system that is a potential source of hazards. For example, crack initiation, crack growth, and deformation can be monitored to predict and prevent system catastrophic failure. The probability that an event will occur can be altered by ensuring that cracks are prevented from reaching critical sizes. This and other types of predictive methods of reducing risk does not reduce the consequences of failure.

Material selection (for example, heat treated tubing) can not only affect the mode of failure (for example, "leak before break" instead of fracture) as pointed out in para. 6200, but can affect the frequency of periodic inspection to achieve a given severity probability rating. See para. 6221.

6430 Personnel (Primary) Location Classification

6431 Personnel SPC. Personnel SPC Code assessment shall be a function of the facility layout and location (para. 6420), the nature of the pressurized system media (para. 6100), and characteristics of the equipment (para. 6200). The severity and probability/classification (SPC) of personnel subjected to hazards shall be determined in a manner shown in (para. 6420) and the following severity classification definition used for unprotected and protected (where required) conditions (severity class):

(a) Catastrophic—may cause death (Severity Class I)

(b) Critical—may cause severe injury or illness (Severity Class II)

(c) Marginal—may cause minor injury (Severity Class III)

Copyright ASME International
Provided by IHS under license with ASME
No reproduction or networking permitted without license from IHS
Not for Resale

(d) Negligible—probably would not affect personnel safety or health (Severity Class IV)

6432 Operating Personnel. Based upon a risk assessment per para. 6420 using the above categories, personnel directly adjacent to high energy pressure equipment shall be provided with work space or equipment with tolerable risk. A SPC code shall be assigned to facility personnel work and travel areas for both protected and unprotected conditions at each location.

6440 Equipment (Secondary) Location Classification

6441 Pressure Systems Operating Equipment. Operating equipment in the paths of potential hazards (particularly force/displacement conditions) should be examined for damage resistance, rated for severity and probability classification SPC (per para. 6420), and suitably protected where required or optional. Likewise, the effects on facilities systems such as ventilation equipment and utilities piping should be considered.

6442 Equipment Spacing

6442.1 Primary Equipment. Primary Equipment such as reaction vessels or major pressurized chambers ideally should be installed as near as possible to the center of the space allocated for the particular system. This is especially valid for equipment to be installed in a containment, or barricade, the design of which is based on an analysis of the potential for sudden release of confined energy.

6442.2 Multiple Chambers. If there is more than one primary chamber, each should be installed in such a way (either via suitable barrier or distance) that failure of one will not cause damage to another.
If multiple chambers must be located together, the potential for coincident failure must then be considered when evaluating or designing the facility.

6442.3 Auxiliary Equipment. Auxiliary Equipment should be installed in such a way as to resist being damaged by any of the defined hazards relating to either failure of the primary equipment, or other problems due to system leakage and/or other malfunction.

When containments, barricades, or suppressive shields are part of the facility, small auxiliary components which normally would be mounted on a panel or rack still should be installed in this manner. They should *not* be installed on the outside of a safety wall facing operating personnel as they in turn may become secondary missiles following impact of a blast wave or a primary missile on the inside of the wall.

Likewise, if there are multiple containments, equipment should not be installed on a common partition wall.

Equipment shall be assigned a SPC index for both protected and unprotected conditions at each location.

6450 Protective Systems Effect on Reclassification

6451 Reclassification. When planning or evaluating a high energy installation which requires (as a result of a risk assessment) a mitigation/interdiction by a protective system (e.g., a full containment structure, a barricade, a suppressive shield, a shelter, or protective systems) the following factors should be considered with respect to reclassifying the facility:

(a) Have the nature of the hazards, the released products from either a primary or secondary equipment failure, and their corresponding effects at the receptor been changed (see para. 6100; e.g., the magnitude of potential transmitted blast wave)?

(b) Have source yield characteristics been reduced (or altered) by confinement or mitigation at the source, e.g., the confined media state, energy content, media hazard changes (see para. 6200)?

(c) Have protective measures affected risk classification (para. 6400) and have the SPC values been calculated to reflect the protective systems effects on personnel and equipment?

(d) Have the most effective means (by type) to mitigate the hazards (see para. 6500) been selected?

6452 Classification. A protective system shall be assigned a SPC, PEC and PSC number for before and after protection. See para. 6560 for cost effectiveness, PEC and PSC.

Protective Systems shall be required for primary and secondary strategic equipment receptors with a SPC category of 1 and 2 to ensure that hazards (with protection) are reduced to a severity class of 3 or greater for all primary receptors.

Paragraph 6500 outlines guidance for requirements for which protection is required for each hazard and type of protective systems. Paragraph 6300 outlines the performance criteria for primary, secondary, and protective systems.

6500 PROTECTIVE (MITIGATION) SYSTEMS

This Standard recognizes that the risk to personnel and property may be reduced by redesigning or modi-

Copyright ASME International
Provided by IHS under license with ASME
No reproduction or networking permitted without license from IHS
Not for Resale

fying the pressure system, by providing protective systems to mitigate the effects of a pressure system failure, or a combination of both (see Fig. 6020-1). Therefore, protective systems are not required as part of a high energy pressure system design, but are allowed to assist the designer and owner in providing adequate safety to personnel and property where the options for primary system redesign are limited. In general, this Standard considers those systems that are integral or contiguous with the primary pressure and process system boundary to be part of the primary system design. Protective systems shall not be used for operational purposes but rather for protection (mitigation).

If an analysis (see Fig. 6020-1) for Level I and II energy release and exposure to hazardous material estimates that the risk is above tolerable levels, the user of this Standard shall reduce that risk to tolerable levels by mitigation or relocation or system hazard redesign. There are various techniques and structures which can mitigate or interdict the effects of such release. The systems for protection can be either active or passive, they can also be located either near the hazardous release source, or near the "receptors" to be protected, or in between, and they can utilize mechanical, chemical, electrical, or various scientific principles; they may be fixed or portable, and they may be worn by personnel or detached. The implications of the use of protective systems to reduce risk have been referred to throughout Section 6000. The following is a brief summary.

When planning or evaluating a high energy installation which includes a protective system, the following facility related factors shall be considered:

(a) Identification and analysis of hazards with respect to the nature of the released products of either a primary or secondary equipment failure, their corresponding effects at the receptor (para. 6100) (e.g., the magnitude of potential transmitted blast waves versus stability of surrounding structures.)

(b) Identification of source characteristics that affect the magnitude of yield; e.g., the confined media state (e.g., liquid, a flash vaporizable liquid, or a gas), systems characteristics, energy content, media hazard (see para. 6200).

(c) Means of mitigation of the hazards, by type, to tolerable criteria levels of exposure to personnel and equipment (see para. 6300) which includes force/displacement and degenerative conditions (e.g., the effectiveness of ventilation to accommodate effluent from equipment leakage as a function of toxicity, explosivity, and corrosivity).

(d) The effect of location that influences the risk of system failure and risk to personnel; i.e., protection from hazardous event probability and severity to adjacent high energy pressure systems, strategic equipment, buildings, travel-ways, work areas, and protective systems (see para. 6400).

When protective (mitigation or interdiction) systems are required by paras. 6300 and 6400, the designer shall evaluate the suitability of the type of protection to a given application.

6510 Protective Systems Classifications

This Standard does not recommend or require specific types or designs of protective systems or devices. Different protective systems or devices may be used to reduce a given type of hazard or a single protective system may be used to mitigate more than one or all hazards. The designer shall determine whether more than one hazard may occur simultaneously and design the protective system accordingly. The designer shall also recognize that protective systems that are effective in one type of system design may not be as effective in another application. The owner shall recognize that alterations to the primary pressure system or the protective system may negate the effectiveness of the protective system and, therefore, all alterations shall be documented and evaluated with respect to their effect on the risk to personnel and property. It is the responsibility of the designer and owner to ensure that the protective system or components provide the level of protection required by this Standard.

The Standard does not limit protective systems to mechanical systems. Any type of system that can affect mitigation of hazards is permissible, which includes combinations of different types of systems such as mechanical, chemical, electrical, optical, thermal, magnetic, etc.

The need for test certification for various types versus design of the pressure system is covered in this Standard as are system or equipment secondary hazards. Protective systems may be portable. For example, personnel protection may be worn or portable (moving with personnel) to afford protection at tolerance risk levels.

The classification, rating, and specification for protective systems shall be documented (see para. 6600) and the location of these documents suitably noted on the protective system.

Protective systems shall be classified and identified according to the hazard(s) to which they are designed to provide protection as identified in para. 6110, the type of receptor to which they are designed to provide

Copyright ASME International
Provided by IHS under license with ASME
No reproduction or networking permitted without license from IHS
Not for Resale

protection (see Table 6300-1), and the level or degree of protection and category.

Containment protection may be global (total system protection) or local (component protection such as a valve, etc). Pressure system controlled failure or protective devices (such as relief devices or rupture disks) shall be evaluated for hazardous release protection in the same manner as an uncontrolled failure.

6520 Detection, Warning, and Portable Systems

Detection devices shall be provided to alert personnel of the failure of a pressure system to a habitable environment (external or internal) and also the failure of a pressure system to a protective enclosure (containment or shelter). There shall be a different type alert system for each.

Provision shall be made where appropriate for

(a) dosage or exposure detection by area and personnel

(b) decontamination or personnel scrub facilities

(c) movable or mobile shelters for transport to or from the affected area

(d) warning lights

(d) alarms

(e) interlock connected to force, motion, degenerative hazard sensing devices

(f) protection by remote control

6530 Test Certification

The effectiveness of the protection/mitigation designs may rely on test certification. Some design handbooks may be a useful aid for the use of this standard in designing protective systems. However, the user must demonstrate the technical appropriateness, validity, and applicability to the system analysis for which this Standard is being used.

Effectiveness of barricades or containments depend on their response to dynamic loading following vessel rupture or subsequent explosions. Very few of the methods or equipment discussed in this Section 6000, with the exception of venting or suppression methods lend themselves to the design of barricades or containments using handbook procedures. Hence, the design of these protective devices may need to be certified using empirical data or dynamic testing. Where testing is deemed to be necessary, care must be taken to use an appropriately qualified laboratory. If analytical methods are relied upon to design the barricade or containment, the user shall demonstrate their technical appropriateness, validity, and applicability.

6540 System or Equipment Secondary Hazards

In considering protective containment or barricading, one must also consider secondary hazards which may be accentuated or affected by the barricade or containment. Secondary hazards associated with release of vessel contents are discussed in paras. 6100–6190. Also, para. 6148 discusses secondary fragments such as objects located near an exploding vessel which can be accelerated by blast waves or vessel fragment impact, and become damaging missiles. Secondary explosions and blast waves are cited in para. 6138.

Examples of other secondary hazards are:

(a) failures of barricades, so that they cause debris/missile hazards;

(b) venting of hazardous gases or dusts from vented vessels into personnel areas;

(c) increased blast loads on structures because of reflections from barricade or containment structures;

(d) directed blast and/or debris throw for vessels located in pits.

These are only examples of possible secondary hazards. Secondary hazards peculiar to particular operations and materials should always be considered.

6550 Emergency Protective Systems

Emergency protective systems are backup or supplemental to primary protective systems that are deemed necessary to protect against a specified hazard. Emergency protective systems may be used to assist in temporarily protecting personnel and equipment prior, during, or after a hazardous release where personnel safety is at risk or may be placed at risk during rescue or clean-up operations. Emergency protective systems may consist of fixed or portable protection.

6560 Risk vs. Cost Effectiveness

In addition to the SPC code, a further measure of risk versus cost effectiveness shall be provided by evaluating siting-protective system effectiveness. A qualitative measure is provided by way of:

(a) Protective Effectiveness Coefficient (PEC). This is determined as the exponent (n) obtained from the ratio of estimated cost for the repair, compensation, and restitution (actuarial estimate) incurred as a result of a postulated system failure divided by the cost to

Copyright ASME International
Provided by IHS under license with ASME
No reproduction or networking permitted without license from IHS
Not for Resale

put in place a protective system against a system failure, and

(b) Protection—Source Coefficient (PSC). This is defined as the exponent (n) from the ratio of the estimated purchase cost for the facility, system, component (that is the source of a potential failure) divided by the cost for the protective system (both total system and local source ratios will be calculated for the pressure system loop). The ratios are expressed $K(10)^n$ where $1.0 > K \geq 0.1$.

6600 PROTECTIVE SYSTEM DOCUMENTATION

The objective of this paragraph is to require the designer, constructor, owner, and operator of high pressure facilities or portions thereof to generate and preserve documentation which is necessary to provide traceability of the historic events and predict the remaining capability of the protection systems (if any) defined in this Standard.

6610 Design Documentation

Design documentation shall include all system/component calculations which are required by Section 6000 for the design of hazardous release protection systems. Such documents shall include, but are not limited to, the system/component specification, criteria, references such as computer program manuals.

Design documentation for these systems shall also include specified material properties or actual measurements available to the designer prior to the development of the calculations as a result of controlled material supply such as material test reports, and concrete strength test results.

Design drawings which incorporate design criteria, and/or establish the fabrication or installation requirements or dimensions are also classified as design documents and shall be retained by the system owner in accordance with para. 6680.

6620 Fabrication Documentation

Fabrication documentation which shall be maintained includes process control records indicating what quality assurance/control programs were functioning during the manufacturing process. These documents shall include, but are not limited to weld traveler reports, material certification reports and other material property reports which may been required by the design process. These records may at the end of the fabrication cycle be substituted by a certification of compliance with the design/purchase specification. It should be noted, however, that it very often becomes beneficial in analysis of hazards protective system changes to have the actual material properties rather than an enveloping certification. The actual test documents should be obtained by the owner in all cases.

6630 Installation Documents

Installation documents are typically comprised of welding records, welder certification records, and material process records including heat treating records, slump tests, soil compaction records, and core boring. Obviously the type of record which is obtained depends on the type of protective system that is being utilized.

For critical systems where the protective system is of such a design that close tolerances must be maintained during installation, good practice dictates that the allowable tolerances be established by analysis prior to installation. Additionally, after installation is completed the as-built dimensions should be checked and compared against the designer dimensions. Any discrepancies must then be resolved by analysis and a statement or documentation of the acceptability of the discrepancy must be issued by the analyst for retention by the owner.

6640 Pre-Service and In-Service Inspection Documentation

Pre-service inspection documents include those records of testing which good practice would dictate be performed to insure construction fabrication and operational integrity. These records shall include the results of ultrasonic testing, radiographs, and hydrostatic testing at operating temperature if applicable.

In-service inspection documents shall be developed and maintained to allow the requalification and recertification of equipment. As such, these documents must include complete operational logs of the equipment indicating all loading phenomena such as temperature and pressure cycles. In the absence of such information the burden of proof of the acceptability of the protection device to perform its intended function lies with the owner of the equipment.

6650 Repair

Repair documentation includes documents which relate to the analysis, fabrication, and inspection phases of the protection device's rehabilitation. Examples of the documents which are included in this category are: the design specification (if different from the original);

Copyright ASME International
Provided by IHS under license with ASME
No reproduction or networking permitted without license from IHS
Not for Resale

the analysis calculations showing the acceptability of the repair scheme, the material test properties used in the analysis and any actual test results; and the results of pre-service inspections and comparisons against the original or supplemental design documents to which the repair work was to be performed.

The documentation shall include any information which must be provided to demonstrate that good engineering practices were followed and good engineering judgement was used to assure personnel and property safety prior to putting a repaired protection system back into service.

6660 Post Accident

Post accident documentation includes records of the performance of a protection system following an accident within a high energy system. Such records should include photographs of any residual deformation of the protective device, records or estimates of peak temperatures and pressures reached during the accident and any information pertaining to cyclical loading on the system as a result of pressure wave reflection. Analytical calculations to assure the suitability of the protection system to again perform its intended function following an accident shall also be included in the retained documentation.

6670 Derating, Decommisioning, Recertification, and Requalification

The documentation described in paras. 6610 through 6660 shall be sufficient to allow analysis for determining the need or ability for derating, decommissioning, recertifying or requalifying equipment or facilities at any point during their useful life. The owner shall be aware of additional information required to allow such analysis for their particular facility or equipment and shall make provisions to retain any records of this nature. A recertification program, where applicable, shall be established prior to the initial use of the protective system and the source system (see para. 6422.3). A recertification inspection interval for both the protective system and the source system shall be specified.

6680 Document Storage and Retention

The storage of documents shall be such that the documents are reasonably protected from loss due to fire, water damage and theft. There are several methods that can be used to provide such protection:

(a) Remote duplicate storage of either hard copy, microform, or electronic storage media.

(b) Protection enclosures with proper fire rating water tightness and access control.

The types of records which may be generated during the design and operation of the facility and which shall be retained over the life of the facility if they are appropriate to its design and operation are listed in Table 6600-1. This list provides general record types whose retention should insure maximum flexibility for equipment or facility use over its lifetime.

Copyright ASME International
Provided by IHS under license with ASME
No reproduction or networking permitted without license from IHS
Not for Resale

TABLE 6600-1 TYPES OF RECORDS FOR RELEASE PROTECTION, DOCUMENT STORAGE AND RETENTION

Design Records

Application Codes and Standards used in design
As-constructed drawings
Design calculations and record of checks
Design deviations
Design teports
Design review documents
Purchase and design specifications and amendments
Stress reports
System descriptions
System process flow sheets
Piping and instrumentation diagrams
Technical analysis, evaluations, and reports

Procurement Records

Procurement specifications

Manufacturing Records

As-built drawings and records
Certification of inspection and test personnel qualification
Certificate of compliance
Ferrite test results
Heat treatment records
Liquid penetrant examination final results
Location of weld filler material
Magnetic particle examination results
Major defect repair records
Nonconformance reports
Performance of test procedure and results records
Pipe fitting location report
Pressure test results
Radiographic procedures
Radiographic review forms and radiographs (preferably in digial form)
Ultrasonic examination final results
Welding procedures

Installation Construction Records

Civil

Check-off sheets of tendon installation
Concrete cylinder test reports and charts
Concrete design mix reports
Material property reports on containment liner and accessories
Material property reports on metal containment shell and accessories
Material property reports on reinforced steel
Material property reports on reinforced steel splice sleeve material
Material property reports on steel embedment in concrete
Property reports on steel piping
Material property reports on structural steel and bolting
Material Property reports on tendon fabrication material
Pile drive log
Pile loading test reports
Procedure for containment vessel pressure-proof test and leak
Rate tests and results
Reports for periodic tendon inspection
Soil compaction test reports

Welding

Ferrite test results
Heat treatment records
Liquid penetrant test final results
Magnetic particle test final results
Major weld repair procedures and results
Radiographic test procedures
Radiographic test final results
Ultrasonic test final results
Weld procedures
Welding filler metal materials reports

Mechanical

Hydro-test procedures and results
Installed lifting and handling equipment procedures, inspection, and test data
Material property records
Material property test reports for thermal insulation
Pipe and fitting location reports
Pipe hanger and restraint data
Safety valve response test procedures
Safety valve response test results

Electrical and Instrumentation and Controls

Documentation of testing performed after installations and prior to systems conditional acceptance
Field workmanship checklist or equivalent logs
Instrument calibration results
Relay test procedures and results
Reports of pre-installation tests
Voltage breakdown tests on liquid installation

General

As-built drawings and records
Final inspection reports and releases
Nonconformance reports and releases
Nonconformance reports
Specifications and drawings

Pre-Operational and Startup Test Records

Automatic emergency power source transfer procedures and results
Final system adjustment data
Flushing procedures and results
Hydrostatic pressure test procedures and results

(continued)

Copyright ASME International
Provided by IHS under license with ASME
No reproduction or networking permitted without license from IHS
Not for Resale

TABLE 6600-1 TYPES OF RECORDS FOR RELEASE PROTECTION, DOCUMENT STORAGE AND RETENTION (CONT'D)

Operation Phase Activity Records	Abnormal occurence records
Operation, Maintenance and Testing	Periodic checks, inspections, and caliberations performed to verify that the surveillance requirements are being met
Records and drawing changes reflecting plant design modifications made to systems and equipment	Changes made in the operating procedures
Transient or operational cycling records for those plant companies that have been designed to operate safely for a limited number of transients or operational cycles	

Copyright ASME International
Provided by IHS under license with ASME
No reproduction or networking permitted without license from IHS
Not for Resale

MANDATORY APPENDIX I
TERMS, DEFINITIONS, AND REFERENCE STANDARDS

I1 TERMS AND DEFINITIONS

accident: an event which occurs without prior planning or forethought, causing property damage or personnel injury.

alteration: any intentional change in the system or equipment from the original Design Specification which affects the pressure containing or operational capability.

amplification Factor: ratio of maximum dynamic displacement divided by static displacement for a structural system, under the same peak applied forces.

autofrettage: a process of prestressing the metal that increases the load at which its permanent deformation occurs.

autoignition temperature: the ignition temperature of a substance, whether solid, liquid, or gaseous, that is the minimum temperature required to initiate or cause self-sustained combustion independently of the heating or heated element. The ignition temperature of a solid is influenced by its physical condition and the rate of heating. Figures of ignition temperatures may vary depending upon the test method, since the ignition temperature varies with the size, shape, and material of the testing container, and other factors. (See NFPA Guide 68.)

ballistic limit: the velocity at which a missile or fragment just perforates a target.

barricade: a barrier, either natural or artificial, of such type, size, and construction as to limit the effects of an explosion on nearby buildings, objects, or individuals.

bending stress: This stress is equal to the linear varying portion of the stress across the solid section under consideration. It excludes discontinuities and concentrations, and is produced only by pressure and other mechanical loads.

blanketing: the technique of maintaining an atmosphere which is inert above a liquid in a container or vessel. (See NFPA Guide 68.)

blast wave: a shock wave produced in air by an explosion.

BLEVE: an acronym for Boiling Liquid Expanding Vapor Explosion.

boundary conditions: prescribed forces, displacements, temperatures, etc., over defined areas or volumes. Example are clamped, simple-support, or free-edge conditions for a beam or plate.

combustible: used synonymously with the term fuel, combustible means a gas or mist or dust capable of being burned. Burning can be described as the chemical reaction of a combustible and gaseous oxidant (normally the oxygen of air) with resultant production of a flame.

When a combustible is intimately mixed with an oxidant and ignited, burning in the form of deflagration of detonation may result. (See NFPA Guide 68.)

containment structure: a structure designed to mitigate the effects of rapid energy release without catastrophic failure.

cyclic operation: routine operation that includes intended repeated variations of pressure and/or temperature of components or systems.

deflagration: burning at a rapid rate, but below the speed of sound in the unreacted medium.

design specification: a set of data and descriptions which contain the criteria (pressure, temperature, loadings) used to design, construct, test, and certify a system or component for its intended operating conditions.

detonation: a self-sustaining chemical reaction moving at a speed equal to or above the speed of sound in the unreacted medium.

drag-type fragment: a fragment shaped so that its drag coefficient is much greater than its lift coefficient.

dust (industrial): any finely divided solid material 420 microns or smaller in diameter (material passing a U.S. No. 40 Standard Sieve. (See NFPA Guide 68.)

dynamic pressure: drag pressure for an object in the flow field of a blast wave.

Copyright ASME International
Provided by IHS under license with ASME
No reproduction or networking permitted without license from IHS
Not for Resale

elastic response: response in which a structure deforms and vibrates without permanently deforming.

endothermic reaction: a chemical reaction which absorbs heat.

exothermic reaction: a chemical reaction which liberates heat.

explosion (scientific definition): In general, an explosion is said to have occurred in the atmosphere if energy is released over a sufficiently small time and in a sufficiently small volume so as to generate a pressure wave of finite amplitude traveling away from the source. This energy may have originally been stored in the system in a variety of forms; these include nuclear, chemical, electrical, or pressure energy, for example. However, the release is not considered to be explosive unless it is rapid enough and concentrated enough to produce a pressure wave that one can hear. Even though many explosions damage their surroundings, it is not necessary that external damage be produced by the explosion. All that is necessary is that the explosion is capable of being heard.

explosion limits: ranges be volume of mixtures of fuels and oxidizers where explosion can occur.

explosion suppression: a technique by which burning in a confined mixture is detected and arrested during incipient stages, preventing development of pressure which could result in an explosion. (See NFPA Guide 68.)

explosive: a substance which can explode; usually, a chemical compound or mixture capable of violent, exothermic reaction.

fire point: the lowest temperature of liquid in an open container at which vapors are evolved fast enough to support continuous combustion. (See NFPA Guide 68.)

fireball: transient flame produced by some explosions in the open.

fireball temperature: the average color or temperature as observed overall from a distance.

flame speed or flame velocity: the speed at which the flame front progresses through the unburnt mixture.

flammable limits: ranges by volume of mixtures of fuels and oxidizers where combustion can occur.

flash point: the minimum temperature of a liquid at which it gives off vapor in sufficient concentration to form an ignitible mixture with air near the surface of the liquid within the vessel as specified by appropriate test procedure and apparatus. (See NFPA Guide 68.)

fragments: chunks of solid material propelled by an explosion.

fundamental burning velocity: the velocity of the gas normal to the flame front with which the unburnt mixture enters a flame and is chemically transformed. (This velocity is determined from laminar flow conditions in carefully controlled apparatus.)

ground shock: the waves of motion produced in the ground by rapid energy release at or below the ground surface.

hazardous materials: stored substances whose release causes secondary hazards such as blast, fragmentation, foundation motion, heat propagation, chemical reaction, ionizing radiation, or biological effects.

heat of combustion: thermal energy released per mole or per unit mass of a combustible material when it oxidizes.

HPS: acronym for High Pressure System.

ideal explosion source: an explosion source having a high enough energy density that it is effectively a point source for producing damaging blast waves.

impulsive loading realm: special region which applies when the duration of loading is short relative to the structural period.

incident: an event which occurs without prior planning or forethought, causing the operation of a safety system or device to prevent personnel injury or property damage external to the containment system, but without such injury or damage occurring.

inert gas: a gas which is noncombustible, nonreactive, and incapable of supporting combustion with the contents of the system being protected.

inerting: the process of rendering a combustible mixture noncombustible through the addition of an inert gas.

initial commissioning: is when the system or component has met its pre-test criteria and is turned over to the user for operation.

irregularities: any condition that does not conform to the set criteria, drawings, or specifications.

lifting-type fragment: a fragment shaped so that its lift coefficient is equal to or greater than its drag coefficient.

Copyright ASME International
Provided by IHS under license with ASME
No reproduction or networking permitted without license from IHS
Not for Resale

limit velocity: a synonym for *ballistic limit.*

load duration: a characteristic time associated with a transient load.

mach reflection: oblique reflection of a shock wave with coalescence of the incident and reflected waves to form a mach wave.

mach wave: the coalesced incident and reflected shock waves after surface reflection over certain angles of incidence and shock strength.

missile: a synonym for *fragment.*

mode of response: type of structural response such as bending, extension, or shear. It can also infer either localized or overall structural response

non-ideal explosion source: an explosion source which has a relatively low energy density, or a low energy release rate, or both.

open vent pressure: the pressure developed by a deflagration in a container having an unobstructed vent.

operation: all actions taken after initial commissioning so that the system will perform its intended function throughout its intended life.

operation procedures: a set of documents specifying parameters and actions to be observed to ensure that the system or component is functioning properly.

optimum mixture: a mixture in which the combustible material and oxidant are in the proper proportion to give the most violent deflagration (i.e., the deflagration with the highest maximum rate of pressure rise). Generally, this occurs at approximately the stoichiometric proportions.

overpressure: as used in this Article, refers to changes in differential pressure resulting from thermal imbalances and similar phenomena capable of causing a differential pressure change of sufficient duration to be compatible with the dynamic response characteristics of the pressure relief devices listed in this Article.

Oxidant (oxidizing agent): any material or substance that can react with a combustible to produce burning or combustion, or a similar exothermic reaction. Oxygen in air is the most common oxidant.

particle velocity (air blast): the transient wind associated with a blast wave.

particle velocity (ground shock): a component of the transient velocity of ground motion imparted by a ground shock.

penetration: interaction of a missile or fragment with a target with partial disruption or displacement of target material (see *perforation*).

perforation: interaction of a missile or fragment with a target wherein the missile or fragment passes completely through the target.

physical explosion: explosive release of energy by rapid mixing of hot and cold materials with no chemical reactions.

p-i diagram: a plot which characterizes damage-producing potential of all combinations of pressure and impulse on a specific structure or other object.

plastic response: response in which a structure deforms with permanent deformation resulting from some loading.

populations index (PI): a four-class index for population densities.

pressurizing medium: the contained fluid in the systems, intended to be transmitting hydrostatic pressure.

primary fragment: a fragment from a casing or container of an explosion source.

probability estimate: the likelihood that an identified hazard will result in a mishap.

process hazards analysis: a comprehensive safety study conducted by the user of the design, installation, and operation of a system and all of its components to discover and assess potential for catastrophic failures which may lead to personnel injury or major equipment damage.

protective barricade: see *protective barriers.*

protective barriers: protective systems which offer limited protection for personnel and/or equipment from any or all types of hazards.

protective shelter: a structure designed to entirely or partially enclose people and/or equipment and protect them from energy release effects.

protective structures: structures designed to contain or attenuate effects of system energy releases.

protective system: any combination of containment structures, suppressive shields, barricades, and protective shelters designed to protect against a given hazard.

protective systems: see *protective structures.*

protective wall or barrier: see *barricade.*

Copyright ASME International
Provided by IHS under license with ASME
No reproduction or networking permitted without license from IHS
Not for Resale

purging: the displacement of one gas by another in a piping or vessel system.

Q-q curve: a thermal damage threshold plot of thermal flux versus thermal energy per unit area for some receiver.

quasi-static loading realm: special region which applies when the duration of loading is long relative to structural period.

repair: the work necessary to restore the system or components to a safe and satisfactory operating condition, provided there is no deviation from the original design specification. See *alteration*.

restraint: some type of system which restrains motion, given an energy release.

risk assessment: a means of providing quantitative and qualitative measures of the potential severity and probability of injury and damage.

scabbing: a synonym for *spalling*. Some civil engineering manuals, however, define scabbing as back surface failures only.

scheduled maintenance: planned work to replenish expendable items, remove and replace vital safety shutdown items such as relief valves, rupture disks, high temperature sensing elements, and to perform in-service inspection of components for wear, corrosion, alignment, and proper performance.

secondary fragment (missile): object which is accelerated by a blast wave or primary fragment impact and can cause impact damage.

severity class: a classification of the consequences of accidents by degree of personnel injury or property damage.

severity-probability code (SPC): a number indicating combined severity and probability of an accident.

shock velocity: the (supersonic) speed of travel of a blast wave front.

side-on: refers to properties of blast waves freely propagating through the air.

spalling: wave-induced and impact-induced failures in materials following impact or shock loading. Some civil engineering manuals limit this term to failures on the impacted face.

specific impulse: integral of pressure-time history of a blast wave.

startup: that period when the system or component is being primed, pressured, or heated prior to initial commissioning.

strain energy: energy stored in a structural component because it is strained.

strategic equipment: system components needed for safe operation and shutdown of a system, and adjacent independently operated high energy systems.

stress intensity: synonymous with Tresca Yield Criterion and Plane Section Assumption in analysis of plates and shells.

suppressive shield: structure designed to attenuate blast waves, arrest fragments, and mitigate fireball effects generated from internal explosions.

temporary instrumentation: any instrumentation used to monitor startup or test condition prior to commissioning the system or used to verify the accuracy of permanently installed instrumentation.

thermal energy per unit area: time integral of thermal flux, Q, at some fixed location.

thermal flux: energy per unit area per unit time at some fixed location, q.

trajectory: the flight path of a body through the air affected by lift, drag, and gravity forces.

transformation factors: factors which transform the properties (mass, resistance, and load) of a structural element into the properties of an "equivalent" one-degree-of-freedom system.

underpressure: pressure below atmospheric pressure (vacuum).

unscheduled maintenance: work performed when any item essential to safe and proper operation exhibits a deterioration of function.

UVCE: acronym for Unconfined Vapor Cloud Explosion.

I2 REFERENCE STANDARDS

(a) Throughout this Standard, references are made to various Codes, Standards, and Specification. These references, with the year of the acceptable edition, are listed in Table I1.

(b) Table I1 will be revised at intervals and reissued as needed.

Copyright ASME International
Provided by IHS under license with ASME
No reproduction or networking permitted without license from IHS
Not for Resale

TABLE I1 CODES, STANDARDS, AND SPECIFICATIONS REFERENCED IN TEXT

Title	Number	Year
Rules for Construction of Pressure Vessels, Divison 1	ASME VIII	2001
Rules for Construction of Pressure Vessels, Division 2, Alternative Rules	ASME VIII	2001
Rules for Construction of Pressure Vessels, Division 3, Alternative Rules for Construction of High Pressure Vessels	ASME VIII	2001
Power Piping	ASME B31.1	2001
Process Piping	ASME B31.3	2002
Recommended Practice for Nondestructive Testing Personnel Qualification and Certification	SNT-TC-1A	1996 (with 1998 Addendum)
Venting of Deflagrations	NFPA-68	2002
National Electrical Code	NFPA-70	1999
Recommended Practices for the Use of Manually Operated High Pressure Water Jetting Equipment		1994
Occupational Safety and Health Administration "Process Safety Management of Highly Hazardous Chemicals"	29 CFR-Part 1910	2001
Guide for Pressure-Relieving and Depressuring Systems, Third Edition	API RP 521	1997

Copyright ASME International
Provided by IHS under license with ASME
No reproduction or networking permitted without license from IHS
Not for Resale

NONMANDATORY APPENDIX A
SUGGESTED GOOD PRACTICE REGARDING ESTABLISHING REQUALIFICATION EXAMINATION PLANS FOR HIGH PRESSURE VESSELS

A100 OWNER REQUIREMENTS

The Owner or his Designee should define for each system segment:

(a) location and potential extent of deterioration;

(b) potential failure mode(s), likelihood, and consequences;

(c) available techniques for monitoring deterioration.

A200 GENERAL RULES

A requalification examination program for high pressure vessels designed and constructed in accordance with the ASME Boiler and Pressure Vessel Code, Section VIII, Division 2 or 3, should be specified by applying the following rules to the cyclic service data required by para. 3420(e).

(a) The cyclic analysis portion of the design report should be used as a basis.

(b) If operating conditions have changed from those assumed in the design analysis, the design analysis should be redone to reflect the revised conditions.

A300 GUIDANCE FOR EXCEPTIONS

For high pressure vessels not designed and constructed in accordance with the ASME Boiler and Pressure Vessel Code Section VIII, Division 2 or 3, the following guidelines should be considered:

(a) Those vessels for which a comparable requalification examination program is in place prior to the issuing of this Standard, could, on the Owner's responsibility, continue to be examined in accordance with that established program. Enhancements to that program as a result of this Standard are the Owner's responsibility.

(b) Those vessels for which a requalification examination program is not in place should be evaluated in accordance with para. 3440, Serviceability Assessment of Used Equipment. A requalification examination program should be developed as described in this Standard.

A400 EXAMINATION FREQUENCY

Except as provided in para. A500, an initial examination should be conducted before, or immediately after the vessel has been subjected to the number of cycles determined in para. A200 or A300.

Subsequent examinations should be conducted before, or immediately after, the accumulation of additional cycles, starting from the most recent examination, equal to $\frac{1}{2}$ the number of cycles determined in para. A200 or A300.

If a crack or crack-like defect is observed, it should be removed by blend grinding or other suitable technique. The blend ground area should then be evaluated to determine suitability for continued service. If the crack cannot be removed, a fracture analysis per Division 3, Article KD-4, should be conducted using the measured crack size as the "initial crack". Subsequent examinations should then be conducted before, or immediately after, the accumulation of additional cycles, starting from the most recent examination, equal to $\frac{1}{10}$ the number of cycles so determined.

A vessel, from which a crack cannot be removed, should be retired if:

(a) it is in the "fast fracture" category and the depth of a detected crack reaches $\frac{1}{4}$ of the theoretical critical crack depth, or $\frac{1}{2}$ of the theoretical remaining cycles to failure are reached, whichever occurs first; or

(b) it is in the "leak before burst" category and the depth of a detected crack reaches $\frac{1}{4}$ of the section thickness, for a monowall structure or the full thickness for a confined liner, except as permitted in para. A500.

In addition, consideration should be given to retiring a vessel after accumulating ten times the number of cycles determined in para. A200 independent of the limits noted in para. A200(a) or A200(b) above.

A500 EXEMPTION FROM EXAMINATION

If the analysis per para. A200 or A300 shows that the vessel is in the "leak before break" category, and

Copyright ASME International
Provided by IHS under license with ASME
No reproduction or networking permitted without license from IHS
Not for Resale

if the theoretical critical crack is greater than four times the section thickness, and if it can be shown that a small leak would not be hazardous to personnel, the vessel may be continued in service beyond the number of cycles determined in para. A200 or A300, and be exempt from a requalification examination, except as required by para. A900. Note that if the provisions of this paragraph are invoked, failure due to fatigue, stress corrosion cracking, and other modes is not precluded.

A600 SPECIAL CONSIDERATIONS

It is recognized that different sections of a vessel may have different fatigue/fracture analyses, and thus will have different requalification programs.

A700 VESSELS WITH MULTIPLE LAYERS

If the pressure vessel is constructed of layers, each of which can be examined, each layer should be examined and evaluated based on the expected mode of failure (leak before break or fast fracture).

A800 IF EXAMINATION IS NOT POSSIBLE

If construction does not permit examination for requalification, except in the case of a confined liner or other component which does not contribute to the integrity of the pressure boundary, the vessel should be retired after completion of the number of cycles determined in para. A200 or A300.

If a particular portion of such a vessel can be examined (e.g., a liner, end forging, closure part, etc.), such portion may then be examined based on its expected mode of failure (leak before break or fast fracture). However, in the case of an inner liner, it also should be demonstrated that it is fully confined, and that either the outer shell(s) or structural windings can by themselves carry the full pressure load, or the design is such that pressure buildup between the liner and outer members in the case of liner failure is prevented.

A900 OWNERS OPTION

Based on the review required in para. A100, plus considering environmental factors, an Owner may establish a periodic requalification examination frequency either greater or less than that determined by the guidelines in paras. A400 through A800.

A1000 ILLUSTRATION OF ANALYSIS TO ESTABLISH EXAMINATION FREQUENCY

The requirements of paras. A400 through A900 are illustrated as a diagram in Fig. A1000. In this figure the terms N_f and N_p are the calculated Design Cycles from the fatigue and fracture analyses described in para. A200 or A300.

A1100 REQUIRED INSPECTOR

All high pressure vessel requalification examinations should be made under the direction of the Inspector.

A1200 EXAMINATION TECHNIQUE

The examination techniques selected should be based on the type and location of cracks anticipated. Since most service cracks initiate at or near a free surface, in areas of discontinuities or other stress concentration, a surface examination of these areas, using one or more of the following techniques, is usually appropriate:

(a) wet fluorescent magnetic particle
(b) fluorescent dye (liquid) penetrant
(c) visible dye (liquid) penetrant
(d) dry powder magnetic particle
(e) eddy current

Where surfaces are not accessible, *UT* and/or *RT* should be considered. Determination of the size is necessary where a surface crack has been detected.

Some examples of areas of pressure vessels in which cracks have developed in the past are:

(a) cross bore intersections;

(b) areas of stress concentration due to changes in bore cross section;

(c) nicks, scratches, or other mechanical damage on bore surfaces in plain cylinders;

(d) threads in threaded closures;

(e) threads and/or lugs in external clamp type closures.

Copyright ASME International
Provided by IHS under license with ASME
No reproduction or networking permitted without license from IHS
Not for Resale

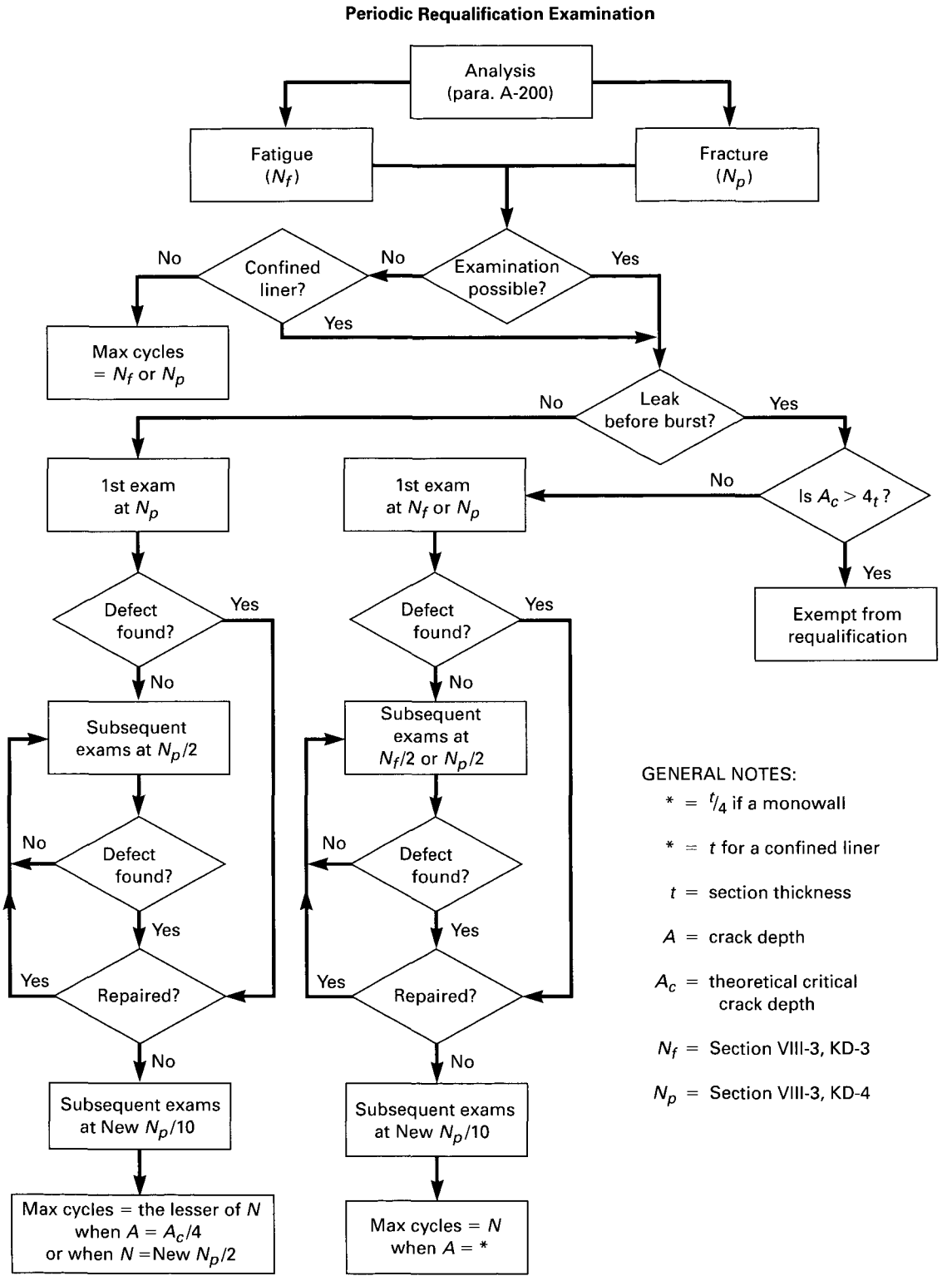

FIG. A1000 ANALYSIS OF PRESSURE VESSELS TO ESTABLISH EXAMINATION FREQUENCY

Copyright ASME International
Provided by IHS under license with ASME
No reproduction or networking permitted without license from IHS
Not for Resale

NONMANDATORY APPENDIX B
SUGGESTED GOOD PRACTICE FOR DESIGN AND INSTALLATION OF PIPING SYSTEMS

B100 GUIDANCE FOR SUPPORT OF SMALL BORE PIPE

The following provides engineering philosophy to influence layout choices when there are several ways to do a job.

(a) The preferred support is a precision clamp with a liner (to prevent fretting) suitable for the service temperature. It should be used where significant vibration is present, such as between a compressor and its shutoff valves. U-bolts may also be used if separated from the pipe (tubing) by brass shim stock, split copper tubing, or other soft metal which will not cause galvanic corrosion. This choice may depend upon maintenance accessibility for periodic retightening.

(b) Pipe fittings (couplings, tees, block elbows, etc.) should be located near supports in order to minimize vibration of these relatively massive parts.

(c) The layout of supports should avoid cantilevered masses in order to forestall a reverse bending failure wherein rupture of the entire pipe cross section could result. Cantilevered masses can come from:

(1) the weight and flexibility of the pipe itself

(2) the addition of fittings (e.g., couplings) in an overhung section.

(d) Pipe supports should be spaced unevenly. This technique gives the best probability of controlling resonance. When resonance is encountered, an additional support located at approximately $\frac{1}{3}$ the length of the resonant span is an effective deterrent.

Small bore pipe [less than $\frac{3}{4}$ in. (19.1 mm) O.D.] should be supported at intervals of approximately 4 ft (1.2 m). This spacing may be greater for pipe $\frac{3}{4}$ in. (19.1 mm) and 1 in. (25.4 mm) O.D. or when vibration is not significant.

(e) Steel supports should be of sufficient cross section and rigidity to adequately support the pipe.

The Designer should consider the relative stiffness of the pipe versus the structural support system.

Supports welded to building steel are preferred. Next best is bolted to building steel with more than one bolt. Friction type clamps should not be used because they tend to loosen.

Commercial struts (normally used to support electrical conduit) are easy to install, but are not strong enough where vibration is significant, and the clamps which fasten these struts to building steel tend to loosen under vibration.

(f) Small bore pipe routing should not restrict access for inspection and repair.

(g) Where practical, weep hole discharge direction should be selected to minimize exposure of operating personnel to the discharge.

B200 SMALL DIAMETER BRANCH CONNECTIONS

(a) Isolation Values. The design of branch connections, including those for utilities, where isolation valves are required, should receive careful attention. The use of the same valve as that used on the main run may result in a system where a very large valve is supported by a small nipple susceptible to bending fatigue; this can be eliminated by:

(1) the use of isolation valves having the same pressure and temperature rating as the main system but lighter in weight; or

(2) the use of adequate supports [para. B200(b)(1)].

(b) Vibration in Small Diameter Branch Connections. The vibration of small diameter branch connections results in relative motion between the parent line and the branch line, introducing bending stresses in the branch line at their juncture. Supports and reinforcement can reduce the incidence of fatigue failure.

(1) Supports. A support which immobilizes the branch with respect to the parent header (run pipe) is normally successful in eliminating vibration-caused failures.

(a) Runs of small bore pipe, after the initial anchor to the parent header, if used, should be supported from rigid building steel or supports referenced to the building foundation. Small bore pipe should not be supported from other pipe. Experience has shown that

Copyright ASME International
Provided by IHS under license with ASME
No reproduction or networking permitted without license from IHS
Not for Resale

vibration in large diameter pipe, which is not damaging to that pipe, can induce resonant vibration in small bore pipe supported from that pipe, and can result in failure.

(b) The distance between the first support and the anchor to the parent header, if used, should be sufficient to allow for thermal expansion. For $^{9}/_{16}$ in. (14.3 mm) O.D. pipe, the first support to building steel should normally be 3 ft to 5 ft (0.91 to 1.52 m) from the header anchor point. This dimension would be somewhat greater for $^{3}/_{4}$ in. (19.1 mm) and 1 in. (25.4 mm) O.D. pipe and reduced by half for $^{1}/_{4}$ in. (6.3 mm) and $^{3}/_{8}$ in. (9.53 mm) O.D. pipe.

(2) Reinforcement. Branch connections in welded piping systems should be fully reinforced, as required by ASME/ANSI B31.3, Chemical Plant and Petroleum Refinery Piping. In the lower pressure sections of high pressure processes where standard pipe is used, this may not be sufficient to deal with the added problem of vibration.

Immobilizing the branch with respect to the parent line has a high probability of minimizing vibration-caused failures.

Other approaches which have been used successfully include:

(a) utilizing a welded tee in the parent line with a reduced outlet for the branch;

(b) eliminating the flanged branch valve, if possible, or locating it some distance from the branch connection and supporting it independently.

B300 COMPONENTS

B310 Choke Valves (Surge and Meter)

These devices may be considered in order to restrict the flow to protect instruments against sudden pressure release. If used, the consequences of inadvertent actuation (loss of pressure indication) should be considered.

B320 Instrument Connections

Instrument connections should be designed to provide an accurate indication of operating conditions. Where solidification, polymerization, or a large increase in viscosity of the working fluid is possible, these connections should be as short as possible.

B330 Pressure Gauges and Sensors

Pressure sensors and the design which incorporates them into the high pressure system should be chosen to minimize the effects of cyclic pressure on the fatigue life of the sensors.

Pressure gauges should be selected such that the full scale range is not exceeded during normal or upset conditions. Use of an isolation valve before any gauge or sensor should be considered.

B400 OVERPRESSURE PROTECTION

(a) Provision should be made to prevent adiabatic compression problems by shortening or purging branch connections.

(b) Consideration should be made for piping flexibility and proper support.

B410 Piping Frictional Loss

Inlet and exit piping should have a cross-sectional area equal to or greater than the pressure relief device connections.

Piping to and from each pressure relieving device should be such that frictional pressure loss does not cause overpressure greater than the overpressure allowable in the system per ASME Boiler and Pressure Vessel Code Section VIII, or cause erratic operation (chattering) of the pressure relief device.

B420 Relief Device Isolation

It has been a common practice at lower pressures to provide isolation valves on the inlet side of relief devices so they can be changed while the process is being operated. High pressure systems generally present a greater degree of hazard and should not be operated without overpressure protection in service at all times. Rupture disks used in combination with relief valves are permitted, upstream or downstream, provided that operation of the disk will not interfere with the function of the relief valve, and proper provision is made to determine when the rupture disk has failed.

B430 Plugging of Inlet Lines

In systems where the nature of the fluid is such that plugging may occur, consider the manner in which the plug forms in designing countermeasures.

(a) In some cases a continuous flush device may be required to keep the relief device clear. Flammable gas detectors and/or no-flow alarms may be employed on vent stacks to detect leaking devices.

(b) The process may be redesigned so that plugging does not occur, or the device may be located in the process to minimize the possibility of plugging.

Copyright ASME International
Provided by IHS under license with ASME
No reproduction or networking permitted without license from IHS
Not for Resale

(c) In cases where plugging may occur, the flow lines to and from the pressure relief device can be designed to pass a plug if it develops. Eliminate sharp corners and shoulders that can restrain a plug to the point that the relief device is rendered ineffective.

(d) Steam-jacketed lines and stacks may be effective in preventing formation of a plug or in keeping it moving.

B440 Adiabatic Compression

Adiabatic compression (without significant heat transfer) may occur in branch connections when the system is rapidly or repeatedly pressurized, particularly in branch connections common to overpressure devices. Very high temperatures may develop, depending on the fluid.

(a) Some high pressure systems will not tolerate oxygen contamination and should be purged with an inert fluid before being put into operation. If air is not completely removed from the system, the high temperatures and air may cause a decomposition in process fluids. In some cases air is not necessary for a decomposition, as the process fluid can itself generate enough heat to initiate a decomposition. Each branch connection should have a purge vent point as close to the end of the line as possible to allow sweep purging of the line.

(b) Inlet connections should be made as short as practical considering the process. In very thick wall vessels, it is common to mount rupture disks flush with the inside of the vessel (in direct contact with the vessel contents) to overcome this problem. An alternative would be to mount the rupture disk in a tee on a line where the process stream will sweep the disk.

(c) In some cases, the pressurizing rate may be controlled to limit the temperature excursion.

B500 POSITIVE DISPLACEMENT PUMPS

Single cylinder piston-type or reciprocating devices pumping a liquid will have an instantaneous flow rate equal to pi (π) times the average flow rate. Multicylinder devices may have more than one cylinder flowing at one time and should be analyzed carefully to determine the peak flow rate, which will always be somewhat more than the average.

Copyright ASME International
Provided by IHS under license with ASME
No reproduction or networking permitted without license from IHS
Not for Resale

NONMANDATORY APPENDIX C
SUGGESTED GOOD PRACTICE REGARDING CONTROL OF PIPING VIBRATION

C100 GENERAL

Vibration control consists basically in understanding the causes and dealing with their effects. This is accomplished ideally by supporting process pipe in such a manner that stresses are minimized.

The general principles provided in this Section are derived from experience with large-scale high pressure operations where vibration energy levels are high and careful attention to support of process piping is required to prevent fatigue failures. These general principles still apply where vibration intensity is less and support philosophy may be less sophisticated.

C200 SOURCE OF VIBRATION

Process pressures in the high pressure range are normally generated by reciprocating compressors and pumps. The action of this equipment generates pressure pulses which can cause vibration in the associated piping.

The pressure pulses in a system are a function of piston speed, piston diameter, valve action, fluid properties (composition, temperature, and pressure), pipe size, and layout. The vibration which results is the response of the pipe to the excitation caused by the pressure pulses. This vibration may be divided into two general categories: forced vibration and mechanical resonant vibration.

Forced vibration is caused by the periodic loading imposed by pulses in pressure, and generally occurs where bends are frequent. Significant longitudinal elastic deformation also occurs in relatively long runs of pipe. The solution to this problem is to control the movement imposed on the pipe by the pulsations in order to limit stresses, especially bending, to a safe level.

The problem is aggravated when acoustic resonance occurs, resulting in larger pressure pulses. This usually arises in pipe connected to cylinders of high pressure compressors. Preventing this usually involves changes in the piping system, such as installing restricting orifices, addition of cross connections, changes in pipe size and/or layout.

Mechanical resonance is due to the coincidence of the natural frequency of a piece of pipe with the frequency of pressure pulses, which is normally the basic frequency of the compressor/pump and its harmonics. The solution to this problem is usually selecting correct span lengths between supports. In areas where supports cannot be correctly positioned, vibration dampers are an alternative solution.

C300 REDUCING PRESSURE PULSES

The first step in reducing forced vibration is to reduce the pressure pulses. This should be done as part of the initial design of the system.

It is very difficult to predict acoustic resonance in a complicated piping system operating under a range of conditions. The use of analog simulation or suitable computer programs in initial piping design should be considered.

Resonant conditions can be minimized by altering cross connections in compressor interstage piping and by inserting restrictions at appropriate points. In some cases changes in pipe size and layout may be required. Having minimized the probability of the occurrence of acoustic resonance, there may remain a level of pulsation which varies throughout the system, and which cannot be reduced with given machine and pipe dimensions except by fitting accumulator devices.

Accumulation devices are normally fitted to lower pressure cylinders [say up to 6,000 psig (41 MPa)]. Their effect for a given size becomes less as the gas compressibility decreases, and they are normally avoided at pressures above 10,000 psig (68.9 MPa), higher basic levels of pulsation being accepted. At higher pressures, attenuator devices are unacceptable in some cases due to the risk of hazardous chemical activity under low flow rate conditions at the temperatures involved.

Although actual levels of pulses cannot be readily calculated without the use of computer simulation, some principles can be applied to piping layout which will

Copyright ASME International
Provided by IHS under license with ASME
No reproduction or networking permitted without license from IHS
Not for Resale

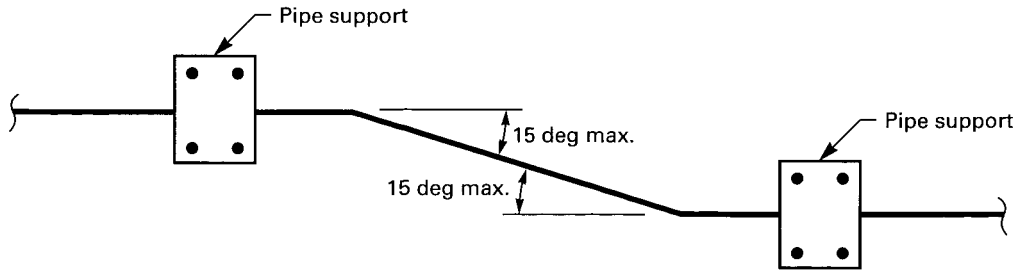

FIG. C500-D MAXIMUM BENDS BETWEEN SUPPORTS

help to minimize the levels achieved. In the case of a gas compression system:

(a) where two or more cylinders are required for a compression stage, the suction piping should be as nearly symmetrical as possible; and

(b) cross connections should be provided on compressors having multiple cylinders per stage between first stage discharge pipes and also between second stage suction pipes. Advice should be obtained from the compressor manufacturer for the best solution.

These cross connections should be run as close to the compressor as possible. Space should be left for additional crossovers to the intercooler inlet and discharge in case the analog simulation shows these to be required.

Pressure pulsation levels are defined as the peak-to-peak level of cyclic pressure variation expressed as a percentage of the average (mean) pressure: 100 ×, $\Delta P/P_m$. Pulsation levels are frequently 15–18%, and can be as high as 100%. The designer should consider the effect of these pulsations in the fatigue analysis of the piping.

C400 PIPING SYSTEM CONSIDERATIONS

A common type of failure associated with piping vibration is fatigue due to bending. Failures typically occur at a stress concentration and are a function of the cyclic stress range as well as the magnitude of stress.

Common locations for vibration caused failures are

(a) threaded connections (such as screwed flanges), where failure usually originates in the last engaged thread

(b) small diameter branch connections, where relative motion between header and branch can result in failure at their intersection

In some cases, reverse bending results in two initiation sites approximately 180 deg away from each other. This results in much more rapid crack propagation, and can result in complete separation of the pipe.

C401 Forced Vibration in Major Process Piping

Pressure pulses cause reaction forces at all changes of direction. This reaction force is due to the unbalance caused by the variation in pressure along the pipe as the pressure wave travels forward, and can be conservatively approximated as the product of pipe area and the peak-to-peak variation of pressure. For practical design purposes, the reaction force calculated as above should be doubled to allow for shock loading.

C402 Vibration Due to Mechanical Resonance

To minimize resonant vibration of major process piping, the first natural frequency of that piping should be at least 50% higher than the highest frequency at which significant pressure pulsations or other exitations exist. This can be accomplished by reducing pipe spans and/or increasing pipe size.

C500 LARGE BORE PIPE [GREATER THAN 1 in. (25.4 mm) O.D.]

The following is a list of some ways to accommodate pulsation forces and other factors related to vibration.

(a) Support pipe directly from the ground where possible. Pipe supports should be designed to withstand dynamic forces from pressure pulsations generated by reciprocating pumps and compressors in the system.

(b) Expansion bolts should not be used for anchoring supports carrying dynamic loads.

(c) Since many high pressure valves are of the right angle type, with the consequent changes in pipe direction in their vicinity, particular attention must be paid to layout and supporting structures.

(d) Supports should be arranged to allow axial move-

Copyright ASME International
Provided by IHS under license with ASME
No reproduction or networking permitted without license from IHS
Not for Resale

ment of the pipe and to restrain lateral movement. They should be located to allow only one bend between supports. Two bends, not exceeding 15 deg each and in one plane, are acceptable. See Fig. C500-D.

(e) Careful consideration should be given to support locations relative to bends and the influence of thermal expansion.

(f) Whenever possible, joints should be located at $^1/_4$ of the distance between supports to minimize the bending moment at the joint. However, this rule cannot be applied where a pipe joins a fitting or valve which is rigidly held, and is not always easy to apply if clearance is required for joint tightening.

(g) Spans adjacent to unsupported fittings and valves should be shorter than the maximum allowed uninterrupted spans.

(h) Consecutive spans should be unequal.

(i) Where unexpected mechanical resonance is encountered, an additional support at $^1/_3$ of the resonant span is often an effective remedy.

(j) Avoid attachment to building structure which may itself vibrate.

(k) Clamp design is important. Figure C500-K shows several types which have been used to restrain varying levels of vibration intensity. This is not meant to exclude other types of hold-downs and clamps.

(l) Single clamp supports may be used on straight runs.

(m) Do not weld supports to pipe.

(n) Inserts should be installed between clamps and pipe to allow for thermal expansion, to assist in vibration damping, and to prevent formation of stress concentrators in the pipe by fretting or indentation. Materials used have included filled (reinforced) Teflon, copper, and SBR bonded compressed fibers. Such inserts should be nonwicking to prevent water intrusion.

Alternatively, if rigid clamps are used, provision shall be made to allow axial movement of the clamp relative to the support block or foundation.

(o) Application of water resistant grease to the pipe before installing inserts and clamps will minimize water intrusion and resulting corrosion.

C600 SMALL BORE PIPE [1 in. (25.4 mm) O.D. OR LESS]

Small bore pipe is widely used in high pressure systems. Although the forces due to fluid pulsation may be small compared to those experienced in large bore pipe, failures due to vibration in these systems can be serious. Design features which have proven to be successful in preventing failures include:

(a) vibration resistant fittings

(b) support of branches to the parent header

(c) careful attention to the support of pipe runs

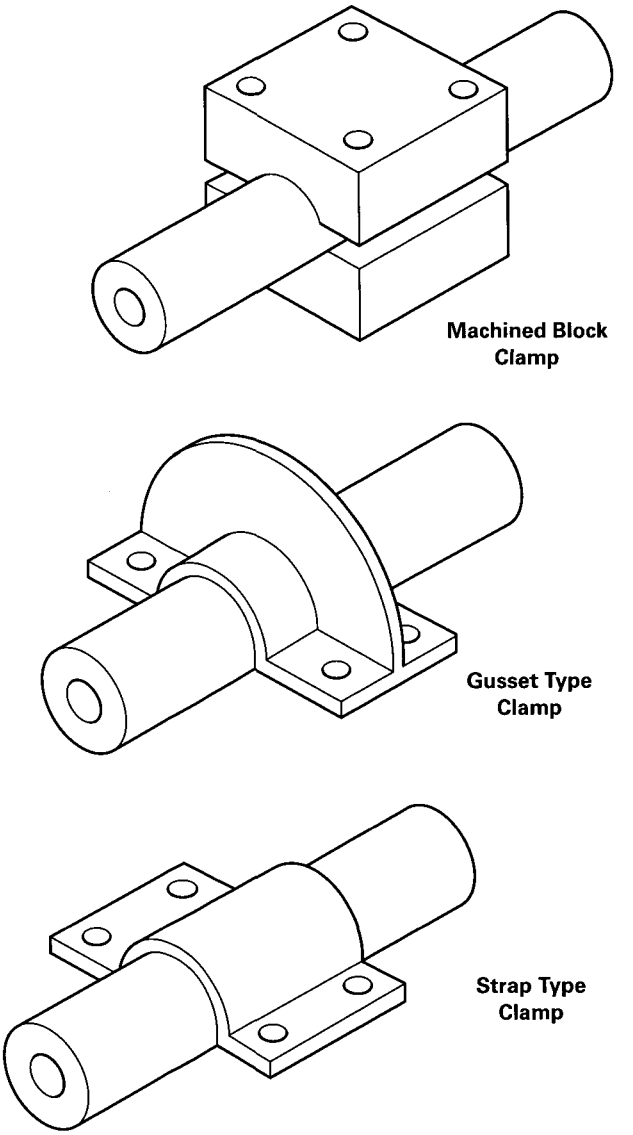

FIG. C500-K HIGH PRESSURE TUBING CLAMPS

Copyright ASME International
Provided by IHS under license with ASME
No reproduction or networking permitted without license from IHS
Not for Resale

NONMANDATORY APPENDIX E
REFERENCES

(The references listed below are applicable to Section 2000.)

[1] *Corrosion Data Survey*, 6th Edition, 1985, National Association of Corrosion Engineers, Houston (P.O. Box 218340, Houston, Texas 77218).

[2] *High Pressure Safety Code*, High Pressure Technology Association, 2nd Printing, Milner & Sons, Ltd. Brentford, Middlesex, 1977.

[3] "Safety in High Pressure Polyethylene Plants" Volumes 1, 2, and 3, *Chemical Engineering Progress*, American Institute of Chemical Engineers, 345 E. 47th, NY 1973, 1974, 1978.

[4] "Safety Standards for High Pressure Systems Facilities", prepared by The Ad Hoc Committee for High Pressure Safety, Union Carbide Corporation, Nuclear Division, Oak Ridge, Tennessee (April 1981).

[5] Baker, W. E., "Blast and Fragments from Bursting Pressure Vessels", Paper No. 83-PVP-61, The American Society of Mechanical Engineers (June 1983).

[6] Baker, W. E., *Explosions in Air*, Wilfred Baker Engineering, San Antonio, TX, 2nd Printing 1983.

[7] Bartknecht, *Explosions, Cause, Prevention, Protection*, translation from the German by H. Burg and T. Almond, Springer-Verlag Book Co., Berlin, Heidelberg, NY, 1981.

[8] Baum, M. R., "The Velocity of Missiles Generated by the Disintegration of Gas Pressurized Vessels and Pipes", Paper No. 83-PVP-63, The American Society of Mechanical Engineers (June 1983).

[9] Chambard, J. L., "Selecting Materials for High Pressure Fittings", *Chemical Engineering Progress*, December 1977.

[10] Crossland, B., Gaydon, S. A., "A Review of Methods of Predicting the Bursting Pressure of Thick-Walled Cylinders Based on Material Properties", *High Pressure Engineering and Technology for Pressure Vessels and Piping Systems*, PVP-Vol. 61, ASME, United Engr. Center, 345 E. 47th, New York, NY 10017.

[11] Ford, Sir Hugh, Crossland, B., and Watson, E. H., "Thoughts on a Code of Practice for Forged High Pressure Vessels of Monoblock Design", presented at the Joint ASME/CSME Pressure Vessels & Piping Conference, Montreal, Canada (June 25–30, 1979).

[12] Fryer, D. M., "Failure Analysis of a 414 MPa (60,000 psi) Isostatic Press", presented at the Pressure Vessel and Piping Conference, San Francisco, California (June 25–29, 1979).

[13] Fryer, D. M., "High Pressure Safety System Analysis — A Proposed Method", presented at the Joint Conference of the Pressure Vessels and Piping, Materials Nuclear Engineering, Solar Energy Division, Colorado (June 21–25, 1981).

[14] Gardner, A. K. and Hughes, W. T., "Control of Vibration in High Pressure Piping Systems", ASME Publication — High Pressure Engineering and Technology, PVP Vol. 125, 1987.

[15] Gardner, A. K., King, K. B., and Cooper, R. J., "In-Service Care Considerations for High Pressure Vessels in a Commercial Polyethelene Process", presented at the Joint Conference of the Pressure Vessels and Piping, Materials Nuclear Engineering, Solar Energy Division, Denver, CO, June 21–25, 1981.

[16] Irving, Robert R., "How Do You Cope with Cracking in Steels?", *Iron Age*, Reprint No. 4067, Chilton Way, Radnor, PA 19089, March 1, 1982.

Copyright ASME International
Provided by IHS under license with ASME
No reproduction or networking permitted without license from IHS
Not for Resale

[17] Keyser, C. A., Basic Engineering Metallurgy, Theories, Principles, and Application; Prentice-Hall, Inc., New Jersey.

[18] Mraz, G. J., and Nisbett, E. G., "Design, Manufacture and Safety Aspects of Forged Vessels for High Pressure Services", presented at the Joint ASME/CSME Pressure Vessels & Piping Conference, Montreal, Canada (June 25–30, 1978).

[19] Pittman, J. F., "Blast and Fragments from Superpressure Vessel Rupture", NSWC/WOL/TR (February 9, 1976).

[20] Pohto, H. A., "Brittle Failure of a Large, High Pressure Isostat and Comparison Analysis of Its Twin Vessel", Y-1989, Department of Energy, National Technical Information Service, US Department of Commerce, August, 1975.

[21] Pohto, H. A., "Energy Release from Rupturing High-Pressure Vessels: A Possible Code Consideration", Transactions of the ASME, Journal of Pressure Vessel Technology, May 1979.

[22] Priddy, T. G. and Hughes, W. T., "Hazards in High Pressure Systems", ASME Publication-Design, Analysis and Safety of High Pressure Equipment-PVP-Vol. 110, July 1986.

[23] Recht, Rodney F., "Containing Ballistic Fragments", 3rd Intl. Conference on High Pressure, Aviemore, Inverness-Shire, Scotland (May 11–15, 1959).

[24] Scott, Ralph A. Jr., Editor, *Toxic Chemical and Explosives Facilities*, Safety and Engineering Design, ACS Symposium Series 96, American Chemical Society, Washington, D.C., 1979.

[25] "Standard Guide for Evaluating Metals for Oxygen Service", ASTM G94, Vol. 14.02, Annual Book of ASTM Standards, American Society for Testing and Materials, 1916 Race St., Philadelphia, PA 19103-1187.

[26] "Standard Guide for Designing Systems for Oxygen Service", ASTM G88, Vol. 14.02, Annual Book of ASTM Standards, American Society for Testing and Materials, 1916 Race St., Philadelphia, PA 19103-1187.

[27] "Standard Guide for Evaluating Nonmetallic Materials for Oxygen Service", ASTM G63, Vol. 14.02, Annual Book of ASTM Standards, American Society for Testing and Materials, 1916 Race St., Philadelphia, PA 19103-1187.

[28] "Standard Practice for Cleaning Methods for Material and Equipment Used in Oxygen-Enriched Environments", ASTM G94, Vol. 14.02, Annual Book of ASTM Standards, American Society for Testing and Materials, 1916 Race St., Philadelphia, PA 19103-1187.

[29] Oxygen, CGA Pamphlet No. G4, Compressed Gas Association, Inc., 1235 Jefferson Davis Highway, Arlington, VA 22202.

[30] Industrial Practices for Gaseous Oxygen Transmission and Distribution Piping Systems, CGA Pamphlet No. G4.4, Compressed Gas Association, Inc., 1235 Jefferson Davis Highway, Arlington, VA 22202.

[31] Manual on Fire Hazards in Oxygen-Enriched Atmospheres, NFPA 53M 1990, National Fire Protection Association, 1 Batterymarch Park, Quincy, MA 02269-9101.

Copyright ASME International
Provided by IHS under license with ASME
No reproduction or networking permitted without license from IHS
Not for Resale

NONMANDATORY APPENDIX F
SI UNITS

The High Pressure Systems Standard is based on U.S. Customary (ft-lb) units of measurement which are to be regarded as the standard. This Appendix is provided as a convenience to the user and contains SI conversion factors for units contained in the Standard.

Copyright ASME International
Provided by IHS under license with ASME
No reproduction or networking permitted without license from IHS
Not for Resale

TABLE F1 LIST OF SI UNITS FOR USE WITH ASME HIGH PRESSURE SYSTEMS STANDARD

Quantity	Unit	Symbol	Other Units or Limitations
Space and Time			
plane angle	radian	rad	degreee (decimalized)
length	meter	m	
area	square meter	m^2	
volume	cubic meter	m^3	liter (L) for liquid only (use without prefix other than in milliliter, mL)
time	second	s	minute (min), hour (h), day (d), week, and year
Periodic and Related Phenomena			
frequency	hertz	Hz	revolutions per second (r/s)
rotational frequency	revolutions per second	s^{-1}	revolutions per minute (r/m)
Mechanics			
mass	kilogram	kg	
density	kilogram per cubic meter	kg/m^3	
moment of inertia	kilogram · $meter^2$	$kg{\cdot}m^2$	
force	newton	N	
moment of force (torque)	newton-meter	N·m	
pressure and stress	pascal	Pa	(pascal = newton per square meter)
energy, work	joule	J	kilowatt-hour (kW·h)
power	watt	W	
impact strength	joule	J	
section modulus	$meter^3$	m^3	
moment of section (second moment of area)	$meter^4$	m^4	
fracture toughness	$pa \cdot \sqrt{m}$		
Heat			
temperature — thermodynamic [Note (1)]	kelvin	K	degree Celsius (°C)
temperature — other than thermodynamic	degree Celsius	°C	kelvin (K)
linear expansion coefficient	meter per meter-kelvin	K^{-1}	$°C^{-1}$
quantity of heat	joule	J	
heat flow rate	watt	W	
thermal conductivity	watt per meter-kelvin	W/(m·K)	W/(m·°C)
thermal diffusivity	sqaure meter per second	m^2/s	
specific heat capacity	joule per kilogram-kelvin	J/(kg·K)	J/(kg·°C)
Electricity and Magnetism			
electric current	ampere	A	
electric potential	volt	V	
current density	ampere per $meter^2$	A/m^2	
magnetic field strength	ampere per meter	A/m	

GENERAL NOTE: Conversion factors between SI units and U.S. customary are given in SI-1, "ASME Orientation and Guide for Use of SI (Metric) Units," and ASTM E 380.

NOTE:

(1) Preferred use for temperature and temperature interval is degrees Celsius (°C), except for thermodynamic and cryogenic work where kelvins may be more suitable. For temperature interval, 1 K = 1°C exactly.

Copyright ASME International
Provided by IHS under license with ASME
No reproduction or networking permitted without license from IHS
Not for Resale

TABLE F2 COMMONLY USED CONVERSION FACTORS

GENERAL NOTE: For others, see ASTM E 380.

Quantity	To Convert From	To	Multiply by [Note (1)]
plane angle	degree	rad	1.745 329 E–02
length	in.	m	2.54* E–02
	ft	m	3.048* E–01
	yd	m	9.144* E–01
area	$in.^2$	m^2	6.451 6* E–04
	ft^2	m^2	9.290 304* E–02
	yd^2	m^2	8.361 274 E–01
volume	$in.^3$	m^3	1.638 706 E–05
	ft^3	m^3	2.831 685 E–02
	US gallon	m^3	3.785 412 E–03
	Imperial gallon	m^3	4.546 09 E–03
	liter	m^3	1.0* E–03
mass	lbm	kg	4.535 924 E–01
	ton (metric) (mass)	kg	1.000 00* E+03
	ton (short 2000 lbm)	kg	9.071 847 E+02
force	kgf	N	9.806 5* E+00
	lbf	N	4.448 222 E+00
bending, torque	kgf · m	N·m	9.806 65* E+00
	lbf · in	N·m	1.129 848 E–01
	lbf · ft	N·m	1.355 818 E+00
pressure, stress	kgf/m^2	Pa	9.806 65* E+00
	lbf/ft^2	Pa	4.788 026 E+01
	$lbf/in.^2$ (psi)	Pa	6.894 757 E+03
	$kips/in.^2$	Pa	6.894 757 E+06
	bar	Pa	1.0* E+05
energy, work	Btu (IT) [Note (2)]	J	1.055 056 E+03
	ft · lbf	J	1.355 818 E+00
power	hp (550 ft · lbf/s)	W	7.456 999 E+02
fracture toughness	$ksi \cdot \sqrt{in}$	$Pa \cdot \sqrt{m}$	1.098 843 E+06
temperature	°C	K	$t_K = t_C + 273.15$
	°F	°C	$t_K = (t_F + 459.67)/1.8$
	°F	°C	$t_C = (t_F - 32)/1.8$
temperature interval	°C	K	1.0* E+00
	°F	K or °C	5.555 555 E–01

GENERAL NOTE: Care should be taken when converting formulas or equations that contain constant terms or factors. The value of these terms must be understood and may also require conversion.

NOTES:

(1)(a) Relationships that are exact in terms of the base units are followed by a single asterik.

(b) The factors are written as a number greater than 1 and less than 10 with 6 or less decimal places. The number is followed by the letter E (for exponent), a plus or minus symbol, and two digits which indicate the power of 10 by which the number must be multiplied to obtain the correct value. For example: 3.523907 E–02 is $3.523\,907 \times 10^{-2}$ or 0.03523907.

(2) International Table.

Copyright ASME International
Provided by IHS under license with ASME
No reproduction or networking permitted without license from IHS
Not for Resale

ASME Services

ASME is committed to developing and delivering technical information. At ASME's Information Central, we make every effort to answer your questions and expedite your orders. Our representatives are ready to assist you in the following areas:

ASME Press
Codes & Standards
Credit Card Orders
IMechE Publications
Meetings & Conferences
Member Dues Status
Member Services & Benefits
Other ASME Programs
Payment Inquiries
Professional Development
Short Courses
Publications
Public Information
Self-Study Courses
Shipping Information
Subscriptions/Journals/Magazines
Symposia Volumes
Technical Papers

How can you reach us? It's easier than ever!

There are four options for making inquiries* or placing orders. Simply mail, phone, fax, or E-mail us and an Information Central representative will handle your request.

Mail
ASME
22 Law Drive, Box 2900
Fairfield, New Jersey
07007-2900

Call Toll Free
US & Canada: 800-THE-ASME
(800-843-2763)
Mexico: 95-800-THE-ASME
(95-800-843-2763)
Universal: 973-882-1167

Fax—24 hours
973-882-1717
973-882-5155

E-Mail—24 hours
Infocentral@asme.org

* Information Central staff are not permitted to answer inquiries about the technical content of this code or standard. Information as to whether or not technical inquiries are issued to this code or standard is shown on the copyright page. All technical inquiries must be submitted in writing to the staff secretary. Additional procedures for inquiries may be listed within.

Copyright ASME International
Provided by IHS under license with ASME
No reproduction or networking permitted without license from IHS
Not for Resale

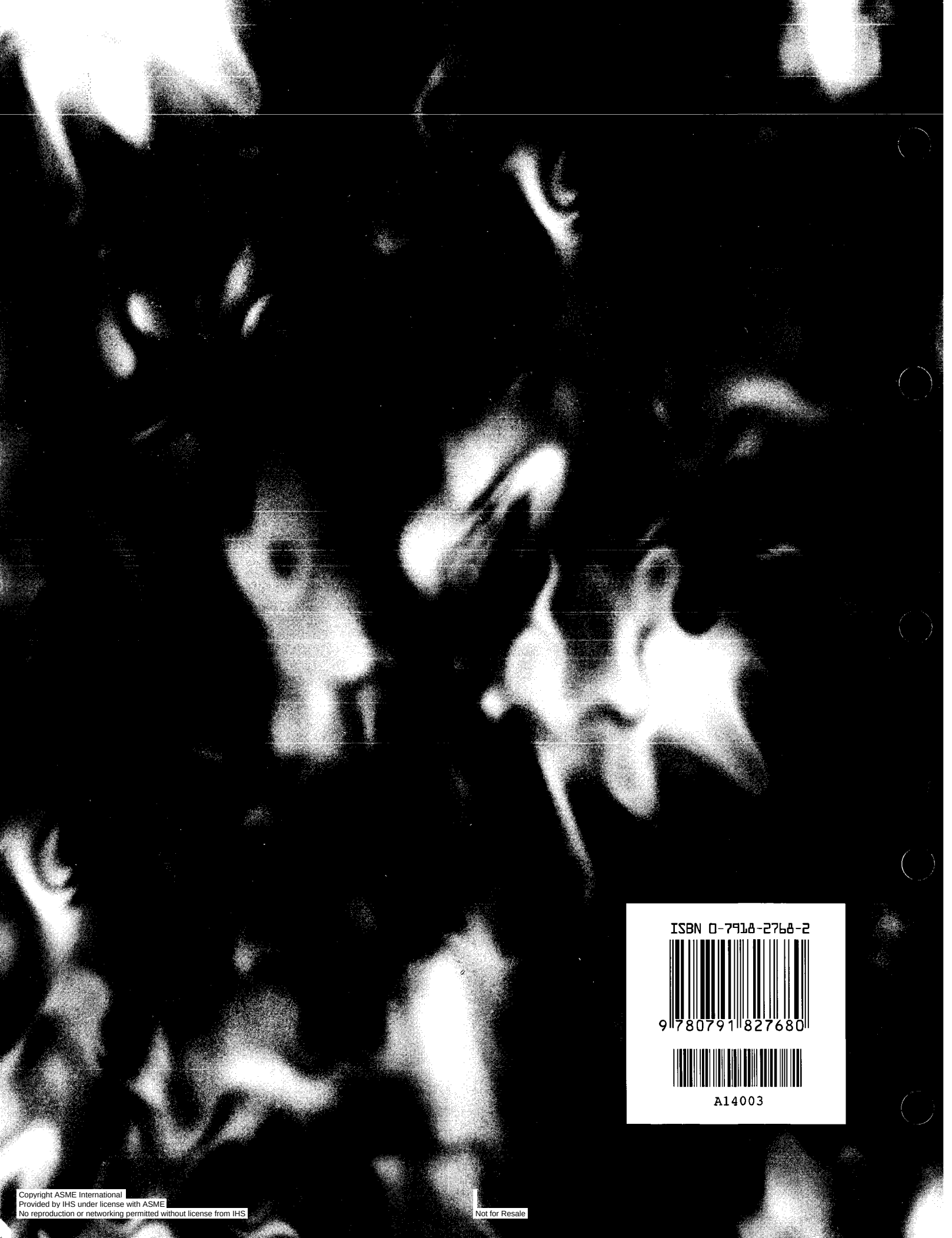

ISBN 0-7918-2768-2

Copyright ASME International
Provided by IHS under license with ASME
No reproduction or networking permitted without license from IHS

Not for Resale