ASME CSD-1–2004
(Revision of ASME CSD-1–2002)

Controls and Safety Devices for Automatically Fired Boilers

AN AMERICAN NATIONAL STANDARD



The American Society of Mechanical Engineers

Copyright ASME International
Provided by IHS under license with ASME
No reproduction or networking permitted without license from IHS

Not for Resale

ASME CSD-1–2004
(Revision of ASME CSD-1–2002)

Controls and Safety Devices for Automatically Fired Boilers

AN AMERICAN NATIONAL STANDARD

The American Society of Mechanical Engineers
Three Park Avenue • New York, NY 10016

Copyright ASME International
Provided by IHS under license with ASME
No reproduction or networking permitted without license from IHS
Not for Resale

Date of Issuance: April 15, 2005

The next edition of this Standard is scheduled for publication in 2006. There will be no addenda issued to this edition.

ASME issues written replies to inquiries concerning interpretations of technical aspects of this Standard. Interpretations are published on the ASME Web site under the Committee Pages at http://www.asme.org/codes as they are issued.

ASME is the registered trademark of The American Society of Mechanical Engineers.

This code or standard was developed under procedures accredited as meeting the criteria for American National Standards. The Standards Committee that approved the code or standard was balanced to assure that individuals from competent and concerned interests have had an opportunity to participate. The proposed code or standard was made available for public review and comment that provides an opportunity for additional public input from industry, academia, regulatory agencies, and the public-at-large.

ASME does not "approve," "rate," or "endorse" any item, construction, proprietary device, or activity.

ASME does not take any position with respect to the validity of any patent rights asserted in connection with any items mentioned in this document, and does not undertake to insure anyone utilizing a standard against liability for infringement of any applicable letters patent, nor assume any such liability. Users of a code or standard are expressly advised that determination of the validity of any such patent rights, and the risk of infringement of such rights, is entirely their own responsibility.

Participation by federal agency representative(s) or person(s) affiliated with industry is not to be interpreted as government or industry endorsement of this code.

ASME accepts responsibility for only those interpretations of this document issued in accordance with the established ASME procedures and policies, which precludes the issuance of interpretations by individuals.

No part of this document may be reproduced in any form,
in an electronic retrieval system or otherwise,
without the prior written permission of the publisher.

The American Society of Mechanical Engineers
Three Park Avenue, New York, NY 10016-5990

Copyright © 2005 by
THE AMERICAN SOCIETY OF MECHANICAL ENGINEERS
All rights reserved
Printed in U.S.A.

Copyright ASME International
Provided by IHS under license with ASME
No reproduction or networking permitted without license from IHS

Not for Resale

CONTENTS

Foreword v
Committee Roster vi
Correspondence With the CSDAFB Committee vii
Summary of Changes viii

Definitions 1

Part CG **General** 5
CG-100 General Requirements 5
CG-200 General Provisions 5
CG-300 Material Requirements 6
CG-400 Testing and Maintenance 6
CG-500 Certification and Reporting 6
CG-600 Operation 7

Part CM **Testing and Maintenance** 8
CM-100 Periodic Testing and Maintenance 8

Part CE **Electrical** 9
CE-100 Electrical Requirements 9

Part CW **Steam and Waterside Control** 11
CW-100 Automatic Low-Water Fuel Cutoff and/or Combined Water Feeding Device 11
CW-200 Automatic Fuel Cutoff for Forced Circulation Boilers 13
CW-300 Pressure Controls 13
CW-400 Temperature Controls 14
CW-500 Safety and Safety Relief Valves 14
CW-600 Modular Boilers 14

Part CF **Combustion Side Control** 16
CF-100 Gas-Fired Boiler Units, Equipment 16
CF-200 Gas-Fired Boiler Units, Purging 20
CF-300 Gas-Fired Boiler Units, Safety Controls 21
CF-400 Oil-Fired Boiler Units, Equipment 22
CF-500 Oil-Fired Boiler Units, Safety Controls 23
CF-600 Low Fire Start, Gas- or Oil-Fired Boiler Units 23
CF-700 Combination Gas- and Oil-Fired Units 25
CF-800 Electrically Heated Boilers 25
CF-900 Combustion Side Controls for Modular Boilers 25

Tables
CF-1 Safety Controls for Automatically Fired Units: Power Gas Burners and Mechanical Draft Atmospheric Gas Burners 18
CF-2 Safety Controls for Automatically Fired Units: Atmospheric Gas Burners — Natural Draft 19
CF-3 Safety Controls for Automatically Fired Units: Oil-Fired Burners 24
CF-4 400,000 Btu/hr (117 228 W) and Smaller (Gas — Natural Draft) 26
CF-5 400,000 Btu/hr (117 228 W) and Smaller (Power Gas Burners and Mechanical Draft Atmospheric Gas Burners), 3 gph (11.4 L/h) and Smaller (Oil) 27

Copyright ASME International
Provided by IHS under license with ASME
No reproduction or networking permitted without license from IHS
Not for Resale

Nonmandatory Appendices

A	Comparison of This Standard and ANSI Z21.13/CSA 4.9	29
B	Typical Fuel Trains	30
C	Manufacturer's/Installing Contractor's Report for ASME CSD-1	36
D	Recommended Preventive Maintenance Schedule	39
E	References to Other Codes and Standards	43

Index 44

Copyright ASME International
Provided by IHS under license with ASME
No reproduction or networking permitted without license from IHS
Not for Resale

FOREWORD

The major perils in operating automatically fired boilers are loss of water (low water), furnace explosion, overpressure, and overtemperature. Principal causes of accidents to automatically fired boilers are lack of proper controls and safety devices, lack of adequate maintenance, improperly trained operators, failure to test controls and safety devices, and complacency on the part of the operator due to long periods of trouble-free operation. It is believed that improved instrumentation, controls and safety devices, proper operating procedures, and a clearer understanding of installation requirements by the manufacturers, installers, and operators can greatly reduce the chances of personal injury, damage to property, and loss of equipment from accidents.

It should be pointed out that any governmental jurisdiction has authority over any particular installation. Inquiries dealing with problems of a local character should be directed to the proper authorities of such jurisdictions.

Safety codes and standards are intended to enhance public health and safety. Revisions result from the committee's consideration of factors such as technological advances, new data, and changing environmental and industry needs. Revisions do not imply that previous editions were inadequate.

The first edition of this Standard, which was approved by The American Society of Mechanical Engineers' Committee on Controls and Safety Devices for Automatically Fired Boilers, was approved and designated as an ASME Standard by The American Society of Mechanical Engineers on April 29, 1977.

The second edition, which was approved by the American National Standards Institute (ANSI) on October 4, 1982, was issued on December 31, 1982. An addenda to the edition, CSD-1a–1984, was approved on August 17, 1984 and issued on November 15, 1984.

The third edition, which was approved by ANSI on November 17, 1988, was issued on February 15, 1989. The CSD-1a–1989 Addenda was approved on October 3, 1989 and issued on February 15, 1990. The CSD-1b–1990 Addenda was approved on June 21, 1990 and issued on December 1, 1990.

The fourth edition, which was approved by ANSI on February 28, 1992, was issued on June 15, 1992. The CSD-1a–1993 Addenda was approved on August 18, 1993 and issued on November 30, 1993. The CSD-1b–1994 Addenda was approved on June 20, 1994 and issued on September 30, 1994.

The fifth edition, which was approved by ANSI on February 6, 1995, was issued on June 30, 1995. The CSD-1a–1996 Addenda was approved on February 5, 1996 and issued on July 31, 1996. The CSD-1b–1996 Addenda was approved on July 16, 1996 and issued on December 20, 1996.

The sixth edition, which was approved by ANSI on January 30, 1998, was issued on April 14, 1998. The CSD-1a–1999 Addenda was approved on November 2, 1999 and issued on March 10, 2000. The CSD-1b–2001 Addenda was approved on July 30, 2001 and issued on November 30, 2001.

The seventh edition, which was approved by ANSI on January 17, 2002, was issued on April 15, 2002.

Following approval by the CSDAFB Standards Committee and ASME, and after public review, ASME CSD-1–2004 was approved by the American National Standards Institute on August 9, 2004.

Copyright ASME International
Provided by IHS under license with ASME
No reproduction or networking permitted without license from IHS
Not for Resale

COMMITTEE ON CONTROLS AND SAFETY DEVICES FOR AUTOMATICALLY FIRED BOILERS

(The following is the roster of the Committee at the time of approval of this Standard.)

OFFICERS

R. E. Albert, *Chair*
B. W. Moore, *Vice Chair*
E. Cho, *Secretary*

COMMITTEE PERSONNEL

R. E. Albert, U.S. Postal Service
D. C. Bixby, Gas Appliance Manufacturers Association
R. K. Black, Johnston Boiler Co.
T. W. Bukowski, Vapor Boiler International
J. L. Cecilia, ITT Industries
J. C. Chicoine, Mestek, Inc.
E. Cho, The American Society of Mechanical Engineers
M. H. Diehl, Jr., Zurich Service Corp.
K. K. Donithan, Total Boiler Control, Inc.
P. K. Fanning, U.S. Naval Facilities Engineering Services Center
S. J. Guzinski, *Alternate,* U.S. Naval Facilities Engineering Services Center
R. S. Glass, Raypak, Inc.
J. P. Gorman, CSA International
G. M. Halley, SJI Consultants, Inc.
K. J. Hoey, AESYS Technologies, LLC
M. A. Malek, State of Florida
B. L. Mickelson, Honeywell International, Inc.
M. F. Mooney, State of Massachusetts
B. W. Moore, Hartford Steam Boiler Inspection and Insurance Co.
W. Barbato, *Alternate,* Hartford Steam Boiler Inspection and Insurance Co.
R. N. Mosher, R.N. Mosher and Associates
V. G. Newton, Chubb and Son
D. J. Perz, Maxitrol
J. R. Puskar, CEC Consultants, Inc.
J. Safarz, *Alternate,* CEC Consultants, Inc.
P. H. Schuelke, Weil McLain
B. J. Iske, *Alternate,* Weil McLain
G. J. Tate, Karl Dungs, Inc.
K. J. Carlisle, *Alternate,* Karl Dungs, Inc.
T. K. Thompson, Underwriters Laboratories, Inc.
M. W. Valentino, Power Flame, Inc.
J. van Heijningen, Siemens Building Technologies, Inc.
J. A. Wagner, Fireye, Inc.
B. Neill, *Alternate,* Fireye, Inc.

HONORARY MEMBERS

W. H. Axtman, Gray Gull Associates, Inc.
M. C. Polagye, Factory Mutual Research Corp.
R. B. West, State of Iowa, Division of Labor Services

Copyright ASME International
Provided by IHS under license with ASME
No reproduction or networking permitted without license from IHS
Not for Resale

CORRESPONDENCE WITH THE CSDAFB COMMITTEE

General. ASME Codes and Standards are developed and maintained with the intent to represent the consensus of concerned interests. As such, users of this Standard may interact with the Committee by requesting interpretations, proposing revisions, and attending Committee meetings. Correspondence should be addressed to:

Secretary, CSDAFB Standards Committee
The American Society of Mechanical Engineers
Three Park Avenue
New York, NY 10016-5990

Proposing Revisions. Revisions are made periodically to the Standard to incorporate changes that appear necessary or desirable, as demonstrated by the experience gained from the application of the Standard. Approved revisions will be published periodically.

The committee welcomes proposals for revisions to this Standard. Such proposals should be as specific as possible, citing the paragraph number(s), the proposed wording, and a detailed description of the reasons for the proposal including any pertinent documentation.

Interpretations. Upon request, the CSDAFB Committee will render an interpretation of any requirement of the Standard. Interpretations can only be rendered in response to a written request sent to the Secretary of the Standards Committee.

The request for interpretation should be clear and unambiguous. It is further recommended that the inquirer submit his/her request in the following format:

Subject:	Cite the applicable paragraph number(s) and provide a concise description.
Edition:	Cite the applicable edition of the Standard for which the interpretation is being requested.
Question:	Phrase the question as a request for an interpretation of a specific requirement suitable for general understanding and use, not as a request for approval of a proprietary design or situation. The inquirer may also include any plans or drawings which are necessary to explain the question; however, they should not contain any proprietary names or information.

Requests that are not in this format will be rewritten in this format by the Committee prior to being answered, which may inadvertently change the intent of the original request.

ASME procedures provide for reconsideration of any interpretation when or if additional information which might affect an interpretation is available. Further, persons aggrieved by an interpretation may appeal to the cognizant ASME Committee or Subcommittee. ASME does not "approve," "certify," "rate," or "endorse" any item, construction, proprietary device, or activity.

Attending Committee Meetings. The CSDAFB Standards Committee regularly holds meetings that are open to the public. Persons wishing to attend any meeting should contact the Secretary of the Standards Committee.

Copyright ASME International
Provided by IHS under license with ASME
No reproduction or networking permitted without license from IHS
Not for Resale

ASME CSD-1–2004
SUMMARY OF CHANGES

Following approval by the ASME CSDAFB Standards Committee, and after public review, ASME CSD-1–2004 was approved by the American National Standards Institute on August 9, 2004.

The 2004 edition of ASME CSD-1 includes editorial changes, revisions, and corrections introduced in ASME CSD-1–2002, as well as the following changes identified by **(04)**.

Page	*Location*	*Change*
1, 2	Definitions	(1) Definition for *AGA* deleted (2) Definition for *burner* revised (3) Definitions for *CSA*; *fan, forced draft*; and *fan, induced draft* added
5	CG-110	Revised in its entirety
	CG-120	Revised
	CG-130	Revised
	CG-140	Added
	CG-210	Revised
6	CG-250	Revised
	CG-260	Revised
	CG-310	Revised
7	CG-610	Last sentence added
10	CE-140(c)	Reference revised
11	CW-110(d)	Revised
14	CW-520(c)	Reference updated
16	CF-110	Revised in its entirety
	CF-120(a)	Revised
17	CF-160	Revised in its entirety; reference updated
18	Table CF-1	Seventh entry added
21	CF-310(d)	Second sentence revised
22	CF-410(c)	Added
25	CF-810(a)	Reference updated
29	Nonmandatory Appendix A	Revised to reflect updated reference
30–34	Figs. B-1 through B-5	General Note revised to reflect updated reference

Copyright ASME International
Provided by IHS under license with ASME
No reproduction or networking permitted without license from IHS
Not for Resale

Page	*Location*	*Change*
36	Nonmandatory Appendix C	Revised; CSA reference replaces AGA
43	Nonmandatory Appendix E	Revised in its entirety

SPECIAL NOTE

The interpretations to ASME CSD-1 are included in this edition as a separate section for the user's convenience.

Copyright ASME International
Provided by IHS under license with ASME
No reproduction or networking permitted without license from IHS
Not for Resale

Copyright ASME International
Provided by IHS under license with ASME
No reproduction or networking permitted without license from IHS
Not for Resale

CONTROLS AND SAFETY DEVICES FOR AUTOMATICALLY FIRED BOILERS

DEFINITIONS

(04)

accepted: a boiler unit, equipment, or device is accepted when listed, labeled, or otherwise determined to be suitable and safe by a nationally recognized testing agency. Field installations are accepted when approved by the authority having jurisdiction.

air change: the quantity of air necessary to completely replace the air contained in the combustion chamber and associated flue passages.

air shutter: an adjustable device for varying the flow of air.

alarm: an audible or visible signal indicating an off-standard or abnormal condition.

alarm circuit: a circuit that includes an alarm.

annunciator: a device that indicates a condition, either normal or abnormal, by visual signals, audible signals, or both.

ANSI: American National Standards Institute.

approved: acceptable to the authority having jurisdiction.

ASME: the American Society of Mechanical Engineers.

atomizing media: a supplementary medium, such as steam or air, that assists in breaking the fuel oil into a fine spray.

authorized inspection agency: the inspection agency approved by the appropriate authority of a state or municipality of the United States or a Province of Canada that has adopted this Standard.

AWG: American Wire Gauge.

bleed line: a line used to relieve pressure to the atmosphere, either manually or automatically.

boiler: a closed vessel in which water is heated, steam is generated, steam is superheated, or any combination thereof, under pressure or vacuum by the direct application of heat. The term *boiler* shall include fired units for heating or vaporizing liquids other than water where these systems are complete within themselves.

boiler, automatically fired: a boiler that cycles automatically in response to a control system.

boiler, high-pressure: a boiler in which steam or vapor is generated at a pressure greater than 15 psig (103.4 kPa gage).

boiler, hot-water heating: a boiler in which no steam is generated and from which hot water is circulated for heating purposes, then returned to the boiler.

boiler, hot-water supply: a boiler that furnishes hot water to be used externally to itself at a pressure less than or equal to 160 psig (1 100 kPa gage) or a temperature less than or equal to 250°F (120°C) at or near the boiler outlet.

boiler, low-pressure: a boiler in which steam or vapor is generated at a pressure less than or equal to 15 psig (103.4 kPa gage).

boiler, miniature: a boiler that does not exceed any of the following limits:

(a) 16 in. (406.4 mm) inside diameter of shell

(b) 20 ft^2 (1.86 m^2) heating surface

(c) 5 ft^3 (0.142 m^3) gross volume,[1] exclusive of casing and insulation

(d) 100 psig (689.5 kPa gage) maximum allowable working pressure.

boiler, modular: a steam or hot water heating assembly consisting of a grouping of individual boilers called modules intended to be installed as a unit with no intervening stop valves. Modules may be under one jacket or may be individually jacketed. The individual modules shall be limited to a maximum input of 400,000 Btu/hr (117 228 W) (gas), 3 gph (11.4 L/h) (oil), or 115 kW (electric).

boiler manufacturer: an organization that manufactures pressure parts for boilers or that shop-assembles parts into completed boilers.

boiler system: a system comprised of the boiler(s), its controls, safety devices, and interconnected piping, vessels, valves, fittings, and pumps.

boiler unit: a complete assembly comprised of the boiler, the apparatus used to produce heat, and associated controls and safety devices.

branch circuit: that portion of the wiring system between the final overcurrent device protecting the circuit and the utilization equipment.

[1] The gross volume is intended to include such gas passages as are integral with the assembled pressure parts. Gross volume is defined as the volume of a rectangular or cylindrical enclosure into which all the pressure parts of the boiler in their final assembled positions could be fitted. Projecting nozzles or fittings need not be considered in the volume.

Copyright ASME International
Provided by IHS under license with ASME
No reproduction or networking permitted without license from IHS
Not for Resale

Btu (British thermal unit): a quantity of heat required to raise the temperature of 1 lb (0.45 kg) of water 1°F (0.56°C).

Btu/hr: a unit of power equal to one British thermal unit/hr.

building code: an ordinance that sets forth requirements for building design and construction, and equipment installation, or where such an ordinance has not been enacted, one of the following model codes:

(a) National Building Code;
(b) Standard Building Code; or
(c) Uniform Building Code.

burner: a device for the introduction of fuel and air into the combustion zone at the desired velocities, turbulence, and concentration to establish and maintain ignition and combustion of the fuel (see also *burner assembly*).

burner, atmospheric: a gas burner in which air for combustion is supplied by natural draft, the inspirating force being created by gas velocity through the orifices.

burner, natural draft type: a burner that depends primarily on the natural draft created in the flue to induce the air required for combustion into the burner.

burner, power: a burner in which all air for combustion is supplied by a power-driven fan that overcomes the resistance through the burner.

burner assembly: a burner that is factory-built as a single assembly or as two or more subassemblies that include all essential parts necessary for its normal function when installed as intended.

combined feeder/cutoff: a device that regulates makeup water to a boiler in combination with a low-water fuel cutoff.

combustion: the rapid oxidation of fuel, producing heat or heat and light.

combustion air: the air required for combustion of the fuel. This does not include the air used for atomization.

conductor: a body that may be used to conduct electric current.

continuous duty: the design feature of an electrical device, such as a motor, enabling the device to operate at the rated load for an indefinite period.

control: a device designated to regulate the fuel, air, water, steam, or electrical supply to the controlled equipment. It may be automatic, semiautomatic, or manual.

control, operating: an automatic control, other than a safety control, to start or regulate input according to demand, and to stop or regulate input on satisfaction of demand.

control, primary safety: a control directly responsive to flame properties, sensing the presence of flame and, in event of ignition failure or loss of flame, causing safety shutdown.

control, safety (also known as limit): a control responsive to changes in liquid level, pressure, or temperature, and set beyond the operating range to prevent the operation beyond designed limits.

control manufacturer: an organization that manufactures operating and safety controls for use on boilers.

CSA: CSA International.

damper: a valve or plate for regulating combustion air or flue gases.

draft: the difference in pressure between atmospheric and some other pressure in the furnace or gas passages.

drip leg: the container placed at a low point in a system of piping to collect condensate and from which condensate may be removed.

fan, forced draft: a fan used to supply air, under pressure, to the fuel-burning equipment of the boiler.

fan, induced draft: a fan used to exhaust gases, under suction, from the boiler.

firing rate: the rate at which air, fuel, or an air-fuel mixture is supplied to a burner, expressed in volume or heat units supplied per unit of time.

flame failure response time: the time interval between the loss of flame and deenergizing the safety shutoff valve.

FM: Factory Mutual system.

fuel train: a series of valves, regulators, and controls, between the burner and the source of fuel, that regulates and controls the flow of fuel to the burner.

gas: one of the following fuel gases: natural gas, liquefied petroleum (LP) gas, LP-air mixture, manufactured gas, or mixed gas.

gas-pressure regulator, main: a device for controlling and maintaining a predetermined gas pressure for the main burner.

gas-pressure regulator, pilot: a device for controlling and maintaining a predetermined gas pressure for the pilot burner.

ground: a conducting connection, whether intentional or accidental, between an electrical circuit or equipment and either the earth or a conducting body that serves in place of the earth.

grounded: connected to earth or to some conducting body that serves in place of the earth.

grounded conductor: a system or circuit conductor that is intentionally grounded.

grounding conductor, equipment: the conductor used to connect noncurrent-carrying metal parts of equipment, raceways, and other enclosures to the system grounded conductor at the service and/or the grounding electrode conductor.

guarded: covered, shielded, fenced, enclosed, or otherwise protected by means of covers, casings, barriers,

Copyright ASME International
Provided by IHS under license with ASME
No reproduction or networking permitted without license from IHS

Not for Resale

rails, screens, mats, or platforms to prevent contact by persons or objects.

high fire: the rate of a burner at or near design maximum fuel input.

ignition system, direct: an automatic ignition system that uses an electrically energized device to ignite fuel at a main burner.

input rating: the fuel-burning capacity of a burner at sea level in Btu/hr (W) as specified by the manufacturer.

installing contractor: an organization that installs a boiler, combustion controls, burners, and protective equipment in the field.

labeled: equipment or materials to which has been attached a label of a nationally recognized testing agency that maintains periodic inspection of production of labeled equipment or materials. Labeling indicates compliance with nationally recognized standards.

liquefied-petroleum gas: fuel gases, including commercial propane, predominantly propane or propylene or commercial butane, predominantly butane, isobutane, and/or butylene.

listed: equipment or materials included in a list published by a nationally recognized testing agency that maintains periodic inspection of production of listed equipment or materials. Listing indicates compliance with nationally recognized standards.

local: within physical sight and sound of the affected equipment (see also *lockout*).

lockout: a safety shutdown that requires a local, manual procedure to restart the equipment (see also *shutdown, safety*).

low fire start: the lightoff ignition of a burner with the fuel controls in a low fire position. In a system with guaranteed low fire start, interlocks are used to prevent startup if the burner is not in the low fire position.

low-water fuel cutoff: a device that shuts off the fuel when the boiler water falls to an unsafe level.

LP-gas air mixture: liquefied-petroleum gases distributed at relatively low pressures and normal atmospheric temperatures that have been diluted with air to produce a desired heating value and utilization characteristic.

main burner flame-establishing period: the interval of time the main burner fuel safety shutoff valves are permitted to be open before the primary safety control is required to prove the presence of the main burner flame.

main manifold gas pressure: the gas pressure measured at a location that is specified by the burner/boiler unit manufacturer, that is taken downstream of the main gas pressure regulator.

manifold, gas: the conduit of an appliance that supplies gas to the individual burners.

manual reset device: a component of a control that requires resetting by hand to restart the burner after safe operating conditions have been restored.

maximum fixed stop limit: on a limit control having an adjustable set point, the maximum fixed stop limit is the maximum setting that the control could be adjusted to and still perform its intended function (i.e., safety shutdown).

NEMA: National Electric Manufacturers Association.

NFPA: National Fire Protection Association.

oil: any commercial grade fuel oil as defined by ASTM D 396.

pilot: a small burner that is used to lightoff (ignite) the main burner.

pilot, continuous (also known as constant burning pilot): a pilot that burns without turndown throughout the entire time the burner assembly is in service, whether the main burner is firing or not.

pilot, intermittent: a pilot that is automatically lighted each time there is a call for heat. It burns during the entire period the main burner is firing.

pilot, interrupted: a pilot that is automatically lighted each time there is a call for heat. The pilot fuel is cut off automatically at the end of the main burner flame-establishing period.

pilot, proved: a pilot flame supervised by a primary safety control.

pilot flame-establishing period: the interval of time that fuel is permitted to be delivered to a pilot burner before the primary safety control is required to prove the pilot flame.

pilot manifold gas pressure: the gas pressure measured at a location that is specified by the burner/boiler unit manufacturer, that is taken downstream of the pilot gas-pressure regulator.

point of gas delivery: for other than undiluted liquefied-petroleum gas systems, the point of gas delivery shall be considered the outlet of the service meter assembly, or the outlet of the service regulator or service shutoff valve when no meter is provided. For undiluted liquefied-petroleum gas systems, the point of gas delivery shall be considered the outlet of the first stage LP-gas-pressure regulator.

pool heater: an appliance designed for heating nonpotable water stored at atmospheric pressure such as water in swimming pools, spas, hot tubs, and similar applications.

postpurge period: a period of time after the fuel valves close, during which the burner motor or fan continues to run to supply air to the combustion chamber.

prepurge period: a period of time on each startup during which air is introduced into the combustion chamber

Copyright ASME International
Provided by IHS under license with ASME
No reproduction or networking permitted without license from IHS
Not for Resale

and associated flue passages in volume and manner as to completely replace the air or fuel-air mixture contained therein prior to initiating ignition.

pressure regulator, LP-gas, first stage: on undiluted LP-gas systems, a pressure regulator designed to reduce pressure from the container to 10.0 psi (69 kPa) or less.

pressure regulator, LP-gas, second stage: a pressure regulator for service on undiluted LP-gas systems designed to reduce first stage regulator outlet pressure to 14.0 in. W.C. (4.0 kPa) or less.

pressure regulator, service: a pressure regulator installed by the serving gas supplier to reduce and limit the service line gas pressure to delivery pressure.

proven prepurge: a provision of the control system for preventing burner operation until prescribed air flow is proven to be established during prepurge.

qualified individual: a boiler service technician who is engaged in and is responsible for installation, replacement, repair, or service of the boiler, fuel burning system controls, and safety devices and is experienced in such work.

readily accessible: having direct unimpeded access without the need of a ladder or removing or moving any panel, door, or similar covering of the item described.

recycle: the process of sequencing a normal burner start following safety shutdown.

relay: a device that is operative by a variation in the conditions of one electric circuit to start the operation of other devices in the same or another electric circuit, such as pressure or temperature relay.

relight: the action upon loss of flame to initiate a reignition attempt.

shutdown, normal: shutting off fuel and ignition energy to the burner by means of an operating control.

shutdown, safety: shutting off all fuel and ignition energy to the burner by means of a safety control or a primary safety control (see also *lockout*).

switch, air flow: a device used to prove the flow of air.

switch, high oil temperature: a temperature-actuated device arranged to stop the flow of fuel to a preheated oil burner or to prevent it from starting when the fuel oil temperature rises above a set point which shall be the upper end of the viscosity range recommended by the burner manufacturer.

switch, high-pressure: a pressure-actuated device to monitor liquid, steam, or gas pressure and arranged to stop the flow of fuel to the burner at a preset high pressure.

switch, low oil temperature: a temperature-actuated device arranged to stop the flow of fuel to a preheated oil burner or to prevent it from starting when the fuel oil temperature falls below a set point which shall be the lower end of the viscosity range recommended by the burner manufacturer.

switch, low-pressure: a pressure-actuated device to monitor liquid, steam, or gas pressure and arranged to stop the flow of fluid to the burner at a preset low pressure.

switch, pressure: a pressure-responsive device that makes or breaks an electrical circuit and may be automatically or manually reset.

time delay: a deliberate delay of a predetermined time in the action of a safety device or control.

UL: Underwriters Laboratories, Inc.

upper set point limit: on a limit control having an adjustable set point, the upper set point limit is the maximum setting where the control is adjusted to perform its intended function (i.e., safety shutdown).

valve, automatic: an automatic device consisting essentially of a valve and operator that controls the fuel supply to the burner(s) during normal operation of a boiler. It may be actuated by application of electrical, mechanical, or other means.

valve, lubricated plug type: a valve of the plug and barrel type designed for maintaining a lubricant between the bearing surfaces.

valve, modulating control: a valve designed to regulate fuel input to the burner in response to demand.

valve, proof of closure: a safety shutoff valve equipped with an interlock switch that will be actuated only after the valve has fully closed.

valve, safety shutoff: a fast-closing valve that automatically and completely shuts off the fuel supply in response to a normal or safety shutdown signal.

vent limiter: a means that limits the flow of gas from the atmospheric diaphragm chamber to the atmosphere in the event of diaphragm rupture. This may be either a limiting orifice or a limiting device.

vent line: a line used to convey leakage gases to a safe point of discharge.

vent valve: a normally open, power-closed valve, piped between the two safety shutoff valves, vented to a safe point of discharge.

water heater: a closed vessel in which water is heated by the combustion of fuels, electricity, or any other source and withdrawn for use external to the system at pressures less than or equal to 160 psig (1 100 kPa gage), and shall include the apparatus by which heat is generated and all controls and devices necessary to prevent water temperatures greater than 210°F (99°C).

--`,,```,,,,````-`-`,,`,,`,`,,`---

Copyright ASME International
Provided by IHS under license with ASME
No reproduction or networking permitted without license from IHS

Not for Resale

Part CG
General

CG-100 GENERAL REQUIREMENTS

(04) CG-110 Scope

The rules of this Standard cover requirements for the assembly, installation, maintenance, and operation of controls and safety devices on automatically operated boilers directly fired with gas, oil, gas-oil, or electricity, subject to the service limitations, exclusions, and acceptance to other listings of CG-110, CG-130, and CG-140, respectively. Burner field installed on boilers or as a replacement burner shall comply with the requirements of CF-110 and CF-410 for gas and oil firing, respectively. The use of a gaseous or oil fuel not listed in the definitions has not been evaluated and special considerations may be required.

(04) CG-120 Service Limitations

The rules of this Standard are applicable to the following service:

(a) all automatically fired boilers regardless of fuel input ratings subject to the exclusions and acceptance to other listings of CG-130 and CG-140, respectively

(b) burners field-installed in automatically fired boilers

(04) CG-130 Exclusions

(a) Boilers with fuel input ratings greater than or equal to 12,500,000 Btu/hr (3 663 389 W), falling within the scope of NFPA 85, Boiler and Combustion Systems Hazard Code.

(b) Water heaters (see Definitions).

(c) Direct gas-fired swimming pool heaters that bear a label and/or are listed by a nationally recognized testing agency or other organization that is acceptable to the authority having jurisdiction as complying with ANSI Z21.56/CSA 4.7, Standard for Gas-Fired Pool Heaters.

(04) CG-140 Acceptance to Other Listings

(a) Automatically operated boilers fired with gas having inputs of 400,000 Btu/hr (117 228 W) or less that

(1) comply with Part CW, CE-110(a), CE-110(i)

(2) are listed and/or labeled by a nationally recognized testing agency or other organization that is acceptable to the authority having jurisdiction as complying with ANSI Z21.13/CSA 4.9, Standard for Gas-Fired Low Pressure Steam and Hot Water Boilers, meet the remaining requirements of this Standard

(b) Automatically operated boilers fired with oil having inputs of 3 gph (11.4 L/h) or less that

(1) comply with Part CW, CE-110(a), CE-110(i)

(2) are listed and/or labeled by a nationally recognized testing agency or other organization that is acceptable to the authority having jurisdiction as complying with UL 726, Standard for Oil-Fired Boiler Assemblies, meet the remaining requirements of this Standard

(c) Automatically operated, electrically heated boilers having inputs of 115 kW or less that

(1) comply with Part CW and CE-110(a)

(2) bear a label and/or are listed and/or labeled by a nationally recognized testing agency or other organization that is acceptable to the authority having jurisdiction as complying with UL 834, Standard for Heating, Water Supply, and Power Boilers – Electric, meet the remaning requirements of this Standard

CG-200 GENERAL PROVISIONS

CG-210 General Provisions (04)

Installation requirements shall apply to controls, safety devices, and burners on automatically fired boilers covered by this Standard.

For information regarding boiler and/or burner installations, refer to local codes. In the absence of local codes, see NFPA 54/ANSI Z223.1 for gas-fired boilers and NFPA 31 for oil-fired boilers.

For boilers firing liquefied-petroleum gas or LP-gas air mixtures, the requirements pertaining to the storage container, the first stage and second stage LP-gas pressure regulators and all components upstream of the point of gas delivery (see Definitions) are covered by NFPA 58, Liquefied-Petroleum Gas Code.

CG-220 Installation

(a) Installation of controls, safety devices, and burners shall be in accordance with the manufacturer's instructions and the applicable requirements of this Standard. Diagrams detailing the wiring and piping connections for the controls and safety devices installed shall be furnished by the unit manufacturer [see CG-510(c)].

(b) Installations shall provide accessibility for removing burners; adjusting, cleaning, and lubricating working parts; and replacing controls, safety devices, and other control components.

Copyright ASME International
Provided by IHS under license with ASME
No reproduction or networking permitted without license from IHS
Not for Resale

(c) For information concerning the location and installation of LP-gas air mixture boilers, refer to local building codes.

(d) When one or more modules of a modular boiler (see Definitions) are replaced, compatibility of all controls and systems shall be assured. The replacement modules shall comply with the initial listing and shall meet the requirements of this Standard.

CG-230 Observation Ports

Observation ports shall be provided to permit direct visual inspection of the pilot, main burner flame, and boiler furnace.

CG-240 Guarding

Guards shall be provided to protect personnel and to protect against damage to control equipment. Guarding shall conform to applicable regulations.

(04) CG-250 Annunciator Systems

Where used, annunciator systems, and their associated test and acknowledgement circuits, shall have all contacts, switches, relays, and lights arranged so that safety control functions are not bypassed.

(04) CG-260 Combustion Air

(a) The requirements of combustion air shall be in accordance with NFPA 54/ANSI Z223.1, National Fuel Gas Code, for gas-fired boilers, and with NFPA 31, Standard for the Installation of Oil-Burning Equipment, for oil-fired boilers.

(b) Louvers and grilles shall be fixed in the open position or interlocked with the equipment so that they are opened automatically during equipment operation. The interlock shall be placed on the driven member.

(c) Fans supplying air to the boiler room for combustion shall be interlocked with the burner so that air flow is proven during equipment operation.

CG-300 MATERIAL REQUIREMENTS

(04) CG-310 Components

Each control and safety device covered by this Standard shall be accepted for the intended service by a nationally recognized testing agency such as, but not limited to, UL, FM, or CSA (see CG-320).

CG-320 Installations

The completed installation of controls and safety devices by a boiler manufacturer or installing contractor shall be in accordance with the requirements of this Standard.

CG-400 TESTING AND MAINTENANCE

CG-410 Cleaning

Manufacturers of controls and safety devices requiring periodic service shall furnish detailed instructions covering the procedures and frequency of cleaning [see CG-510(c)].

CG-420 Testing

Manufacturers of boiler units covered by this Standard shall furnish detailed instructions for testing controls and safety devices, both when the boiler is operating and when it is out of service [see CG-510(c)].

CG-430 Maintenance

Boiler, boiler unit, and burner manufacturers shall furnish detailed instructions on maintenance and service procedures for the fuel burning system or for electrically heated units, including controls and safety devices installed with the unit.

These instructions shall include requirements specifying that cover plates, enclosures, and guards shall be maintained in place at all times, except during maintenance (see CG-510 and Part CM).

Boiler, boiler unit, burner, and control manufacturers' operation and maintenance instructions furnished with the equipment shall be retained and made available to the boiler operator (see CG-510).

CG-440 Operational Testing

The operation of control systems and safety devices installed in accordance with this Standard shall be tested by the installing contractor prior to release to the owner/user.

(a) Control systems and safety devices installed in accordance with this Standard by the boiler manufacturer on shop-assembled boiler units shall be operationally tested as close to specified field conditions as practicable prior to shipment from the manufacturer's facility.

(b) For boiler units with inputs less than or equal to 400,000 Btu/hr (117 228 W) for gas, or less than or equal to 3 gph for oil, where production makes it impractical to check each boiler unit individually, the manufacturer will prepare and follow an inspection and quality control procedure by which the requirements of this paragraph will be met.

CG-500 CERTIFICATION AND REPORTING

CG-510 Certification and Reporting

(a) Manufacturers of shop-assembled boiler units covered by this Standard shall maintain a report for each boiler unit or on each category (type, size, or model) for boiler units. For boiler units less than or equal to 400,000 Btu/hr (117 228 W) for gas, or less than or equal to 3

Copyright ASME International
Provided by IHS under license with ASME
No reproduction or networking permitted without license from IHS

Not for Resale

gph for oil, a report shall be maintained on each category (type, size, or model).

This report shall list

(1) each control and safety device installed in accordance with this Standard

(2) name of the manufacturer and model number of each control and safety device

(3) operational test performed (see CG-440)

Paragraphs CG-510(a)(1), (2), and (3) shall be verified by the signature of an authorized representative of the manufacturer on this report. An example of an acceptable data report form is contained in Nonmandatory Appendix C.

This report shall be made available to the authorized inspection agency or the inspector for action as required by the local jurisdiction.

(b) Installing contractors shall maintain or obtain from the manufacturer a data report for each installation completed. The report shall list

(1) each control and safety device installed in accordance with this Standard

(2) name of the manufacturer and model number of each control and safety device

(3) operational test performed (see CG-440)

Paragraphs CG-510(b)(1), (2), and (3) shall be verified by the signature of an authorized representative of the installing contractor on this report. An example of an acceptable data report form is contained in Nonmandatory Appendix C.

This report shall be made available to the authorized inspection agency or the inspector for action as required by the local jurisdiction.

(c) Installing contractors shall obtain from the boiler manufacturer pertinent operating, testing, servicing, and cleaning instructions for the controls and safety devices (see CG-410, CG-420, and CG-430). It is the responsibility of the installing contractor to deliver these instructions, together with complete wiring and piping diagrams, and a written precaution that the operating, testing, and servicing only be performed by qualified individual [see Definitions], to the owner/user and to obtain a receipt for the instructions. The receipt shall be filed with the installation report.

CG-600 OPERATION

CG-610 Lockout (04)

The manual procedure required for effecting the restart of the equipment subsequent to a lockout shall be accomplished from a location where the cause of the lockout may be determined so that the necessary corrective action may be performed to assure that safe operating conditions prevail before restarting the boiler.

Safety control(s) that can electronically reset without local manual intervention, such as when power or control input to the device is interrupted and then restored, shall not be permitted.

Copyright ASME International
Provided by IHS under license with ASME
No reproduction or networking permitted without license from IHS
Not for Resale

Part CM
Testing and Maintenance

CM-100 PERIODIC TESTING AND MAINTENANCE

CM-110 General

Since the effective operation of all safety devices depends upon their ability to respond to their activating impulses, a systematic and thorough maintenance program shall be established and performed.

(a) An inspection and maintenance schedule shall be established and performed on a periodic basis. The periodic basis shall be at least that required by the equipment manufacturer.

(b) Operability and set points on all devices, where applicable, shall be verified by periodic testing, and the results recorded in the boiler log, maintenance record, service invoice, or other written record.

(c) Any defects found shall be brought to the attention of the boiler owner and shall be corrected immediately.

(d) Frequent inspection, adjustment, and cleaning shall be performed during initial start-up operation to ensure all safety controls and devices are functioning as intended and are in a reliable operating condition (see CM-120).

CM-120 Familiarity With Equipment and Procedures

The qualified individual performing inspections and tests shall be trained and familiar with all operating procedures and equipment functions and shall be capable of determining the equipment is in an as-designed operating condition. The individual shall be familiar with all precautions and shall have complied with the requirements of the authority having jurisdiction.

CM-130 Periodic Maintenance and Testing

The owner or user of an automatic boiler system shall develop and maintain a formal system of periodic preventive maintenance and testing. Tests shall be conducted on a regular basis and the results recorded in the boiler log or in the maintenance record or service invoice. The manufacturers' instructions shall be followed. Additional information is contained in a recommended checklist found in Nonmandatory Appendix D.

Because of the variety of equipment and modes of operation, owners and users shall provide a detailed checklist for operator's use in accordance with the boiler, boiler unit, burner, and control device assembly manufacturer's instructions.

Copyright ASME International
Provided by IHS under license with ASME
No reproduction or networking permitted without license from IHS

Not for Resale

Part CE
Electrical

CE-100 ELECTRICAL REQUIREMENTS

CE-110 General

Installation requirements shall apply to controls, safety devices, and burners on automatically fired boilers covered by this Standard.

For information regarding boiler and/or burner installations, refer to local codes. In the absence of local codes, see NFPA 70, National Electrical Code.

(a) A disconnecting means capable of being locked in the open position shall be installed at an accessible location at the boiler so that the boiler can be disconnected from all sources of potential. This disconnecting means shall be an integral part of the boiler or adjacent to it.

A manually operated remote shutdown switch or circuit breaker shall be located just outside the boiler room door and marked for easy identification. Consideration should be given to the type and location of the switch to safeguard against tampering. If the boiler room door is on the building exterior, the switch should be located just inside the door. If there is more than one door to the boiler room, there should be a switch located at each door.

The emergency shutdown switch or circuit breaker must disconnect all power to the burner controls.

(b) All uninsulated live metal parts and all rotating or moving parts that may cause injury shall be guarded to avoid accidental contact.

(c) The electrical equipment shall be arranged so that failure of this equipment will cause the fuel supply to be shut off.

(d) The power supply to the electrical control system shall be from a two-wire branch circuit that has a grounded conductor; otherwise, an isolation transformer with a two-wire secondary shall be provided. When an isolation transformer is provided, one side of the secondary winding shall be grounded. Control voltage shall not exceed 150 nominal volts, line to line.

(1) One side of all coils shall be electrically located in the grounded side of the circuit. All switches, contacts, and overcurrent devices shall be electrically located in the ungrounded or "hot" side of the circuit.

(2) All electrical contacts of every safety device installed in the same control circuit shall be electrically connected in series.

(e) All electrical components and devices shall have a voltage rating commensurate with the supply voltage of the control system.

(f) All electrical components and devices shall be provided with an electrical enclosure that is at least NEMA Type 1 (General Purpose). Where electrical devices will be subject to dripping moisture, the enclosures shall be at least NEMA Type 2 (Driptight).

(g) All electrical control devices shall be of a type tested and accepted by a nationally recognized testing agency.

(h) The design of the control circuits shall be such that limit and primary safety controls shall directly open a circuit that functions to interrupt the supply of fuel to combustion units.

(i) Automatic resetting devices, controls, or switches shall be installed in accordance with the instructions of the combustion safeguard control manufacturer. No automatic resetting device, control, or switch shall be installed in the wiring between the load side (terminal) of the primary or programming control and the main or ignition fuel valve or valves. This does not preclude the installation of manually operated test switches for the purposes of testing tight closure of individual fuel valves.

CE-120 Overcurrent Protection

(a) Conductors for interconnecting wiring that is smaller than the supply conductors shall be provided with overcurrent protection based on the size of the smallest interconnecting conductors external to any control box.

(b) Overcurrent protection for interconnecting wiring shall be located at the point where the smaller conductors connect to the larger conductors. However, overall overcurrent protection is acceptable if it is sized on the basis of the smallest conductors of the interconnecting wiring.

(c) Overcurrent protection devices shall be accessible and their function shall be identified.

CE-130 Motors

(a) Motors exposed to dripping or spraying oil or water shall be of drip-proof construction. All motors shall be fully guarded as installed.

(b) Motors shall be provided with a corrosion-resistant nameplate.

Copyright ASME International
Provided by IHS under license with ASME
No reproduction or networking permitted without license from IHS

Not for Resale

(c) Motors shall be provided with running protection by means of integral thermal protection, overcurrent devices, or a combination of both in accordance with manufacturer's instructions that shall be based on the requirements of NFPA 70, National Electrical Code.

(d) Motors shall be rated for continuous duty and shall be designed for an ambient temperature of 104°F (40°C) or higher.

(e) All motors shall be provided with terminal leads or terminal screws in terminal boxes integral with, or secured to, the motor frames.

CE-140 Ignition System

(a) When automatic electric ignition is provided, it shall be accomplished by means of either a high-voltage electric spark, a high-energy electric spark, or a glow coil.

(b) Ignition transformers shall conform to requirements of UL 506, Standard for Specialty Transformers.

(04) *(c)* Ignition cable shall conform to the requirements of UL 814, Gas-Tube-Sign Cable.

CE-150 Wiring

(a) All wiring for boilers shall be rated for the maximum operating temperature to which it may be exposed. Such wiring shall be in accordance with NFPA 70, National Electrical Code. All wiring between components shall have copper conductors not less than size No. 18 AWG and constructed in accordance with NFPA 70, National Electrical Code.

(b) All electrical wiring shall have a voltage rating commensurate with the voltage of the power supply.

(c) Conductors shall be protected from physical damage.

(d) Conductors shall be sized on the basis of the rated current of the load they supply.

CE-160 Bonding and Grounding

(a) Means shall be provided for grounding the major metallic frame or assembly of the boiler.

(b) Noncurrent-carrying enclosures, frames, and similar parts of all electrical components and devices shall be bonded to the main frame or assembly of the boiler. Electrical components that are bonded by their installation do not require a separate bonding conductor.

(c) When an insulated conductor is used to bond electrical components and devices, it shall show a continuous green color, with or without a yellow stripe.

Copyright ASME International
Provided by IHS under license with ASME
No reproduction or networking permitted without license from IHS

Not for Resale

Part CW
Steam and Waterside Control

CW-100 AUTOMATIC LOW-WATER FUEL CUTOFF AND/OR COMBINED WATER FEEDING DEVICE

CW-110 General Requirements for Water Level Controls for All Boilers

(a) Each low-water fuel cutoff or combined feeder/cutoff device shall conform to UL 353, Standard for Limit Controls, and shall be accepted by a nationally recognized testing agency.

(b) Installation diagrams and instructions shall be furnished by the manufacturer.

(c) Low-water fuel cutoffs or combined feeder/cutoff devices shall be located to provide access for servicing, repairing, testing, and inspection.

(04) *(d)* The low-water fuel cutoff shall have a pressure rating at least equal to the maximum allowable working pressure of the boiler.

(e) In probe type low-water fuel cutoffs, an open circuit failure, break, or disconnection of the electrical components or conductors in the safety circuit shall prevent continued operation of the firing mechanism.

(f) Alarms, when used, shall be distinctly audible above the ambient noise level, and may be used in conjunction with indicating lights. They shall be located to alert the operator or an individual trained as to what action to take when an alarm indicates a potentially dangerous situation is developing.

(g) Low-water fuel cutoffs of the automatic or manual reset type shall be electrically connected in accordance with CE-110(i).

CW-120 Requirements for Water Level Controls for Low-Pressure Steam or Vapor System Boilers

(a) Each automatically fired low-pressure steam or vapor system boiler shall have at least two automatic low-water fuel cutoffs, one of which may be a combined feeder/cutoff device. When installed external to the boiler, each device shall be installed in individual chambers (water columns), which shall be attached to the boiler by separate pipe connections below the waterline. A common steam connection is permissible. Each cutoff device shall be installed to prevent startup and to cut off the boiler fuel or energy supply automatically, prior to the fall of the surface of the water below the level of the lowest visible part of the gage glass (see also CW-210).

EXCEPTION: Only one low-water cutoff is required on gravity return units installed in residences, as defined by the authority having jurisdiction.

A water feeding device, when used, shall be constructed and installed so that the water inlet valve cannot feed water into the boiler through the float chamber or its connections to the boiler. The water feeding device shall be located to maintain the operating water level.

(b) The electrical circuit shall be connected in such a manner that either low-water fuel cutoff control will shut off the fuel or energy supply to the boiler when a low-water condition develops. One cutoff control shall be set to function ahead of the other.

(1) With a pumped condensate return, functioning of the lower of the two cutoff controls shall cause safety shutdown and lockout. The manual reset may be incorporated in the lower cutoff control. Where a reset device is separate from the low-water fuel cutoff, a means shall be provided to indicate actuation of the low-water fuel cutoff. The manual reset device may be the instantaneous type, or may include a time delay of not more than 3 min after the fuel has been cut off.

(2) With gravity condensate return, the lower of the two cutoff controls shall be electrically connected with the upper cutoff to cause a safety shutdown requiring manual reset only when the upper cutoff has failed to function.

(c) The fuel cutoff device may be inserted internally or attached externally to the boiler. An external cutoff device may be attached to piping connecting a water column to the boiler or combined with a water column. Water column piping and connections shall be at least NPS 1. If the lower water fuel cutoff is connected to the boiler by pipe or fittings, no shutoff valves of any type shall be placed in such piping. A cross, or equivalent fitting, shall be placed in the water piping connection at every right angle to facilitate cleaning and inspection. Fuel cutoff devices embodying a separate chamber shall have a vertical drainpipe and a blowoff valve, not less than NPS $\frac{3}{4}$, located at the lowest point of the chamber or water-equalizing pipe connections so that the chamber and the equalizing pipe can be flushed and the device tested.

(d) A low-water fuel cutoff or combined feeder/cutoff device may also be installed in the tapped openings available for attaching a water gage glass directly to a boiler, provided the connections are made to the boiler

Copyright ASME International
Provided by IHS under license with ASME
No reproduction or networking permitted without license from IHS
Not for Resale

with nonferrous tees or wyes not less than NPS $\frac{1}{2}$ between the boiler and the water gage glass so that the water gage glass is attached directly and as close as possible to the boiler; the run of the tee or wye shall take the water glass fitting, and the side outlet or branch of the tee or wye shall take the low-water fuel cutoff or combined feeder/cutoff device. The ends of all nipples shall be hollowed to full-size diameter.

(e) A system may incorporate a time delay component with the low-water fuel cutoff device to prevent short cycling. This component shall not constrict any connecting piping, and the time delay shall not exceed the boiler manufacturer's recommended timing or 90 sec, whichever is less. The device shall cut off the fuel or energy supply when the water falls to the lowest visible part of the gage glass.

CW-130 Requirements for Water Level Controls for Hot-Water Heating Boilers

(a) Each automatically fired hot-water heating boiler, except those installed in residences (as defined by the authority having jurisdiction), shall be protected by a low-water fuel cutoff intended for hot-water service (see also CW-210).

(b) Since there is no normal waterline to be maintained in a hot-water boiler, the low-water fuel cutoff can be located any place above the lowest safe permissible water level established by the boiler manufacturer.

(c) If the low-water fuel cutoff is located in the system piping, it must be assured that the float chamber will drain properly under a low-water condition; and the installation must be arranged to assure that if flow occurs in the float chamber, it will be in the upward direction. The low-water fuel cutoff device may be inserted internally or attached externally to the boiler. An external low-water cutoff device attached to the boiler by piping and connections shall be at least NPS 1. If the low-water fuel cutoff is connected to the boiler by pipe or fittings, no shutoff valves of any type shall be placed in such piping. A cross, or equivalent fitting, shall be placed in the water piping connection at every right angle to facilitate cleaning and inspection. Low-water fuel cutoff devices embodying a separate chamber shall have a vertical drainpipe and a blow-off valve *not* less than NPS $\frac{3}{4}$, located at the lowest point of the chamber of water equalizing pipe connections so that the chamber and equalizing pipe can be flushed and the device tested.

(d) Functioning of the low-water fuel cutoff due to a low-water condition shall cause safety shutdown and lockout. Where a reset device is separate from the low-water fuel cutoff, a means shall be provided to indicate actuation of the low-water fuel cutoff. The manual reset device may be the instantaneous type, or may include a time delay of not more than 3 min after the fuel has been cut off.

(e) A means shall be provided for testing the operation of the low-water fuel cutoff without resorting to draining the entire system. Such means shall not render the device inoperable. If the means temporarily isolates the device from the boiler during this testing, it shall automatically return to its normal position.

CW-140 Requirements for Water Level Controls for High-Pressure Steam Boilers

(a) Each automatically fired high-pressure steam boiler, except miniature boilers, shall have at least two automatic low-water fuel cutoff devices. When installed external to the boiler, each device shall be installed in individual chambers (water columns), which shall be attached to the boiler by separate pipe connections below the waterline. A common steam connection is permissible. Each cutoff device shall be installed to prevent startup and to cut off the boiler fuel or energy supply automatically when the surface of the water falls to a level not lower than the lowest visible part of the gage glass. One control shall be set to function ahead of the other. Each miniature boiler shall have at least one low-water fuel cutoff device (see also CW-210).

(b) Functioning of the lower of the two controls shall cause safety shutdown and lockout. The manual reset may be incorporated in the lower cutoff control. Where a reset device is separate from the low-water fuel cutoff, a means shall be provided to indicate actuation of the low-water fuel cutoff. The manual reset device may be of the instantaneous type or may include a time delay of not more than 3 min after the fuel has been cut off.

(c) The fuel cutoff device may be inserted internally or attached externally to the boiler. An external cutoff device may be attached on piping connecting a water column to the boiler or combined with a water column. Water column piping and connections shall be at least NPS 1. If the low-water fuel cutoff is connected to the boiler by pipe or fittings, no shutoff valves of any type shall be placed in such piping. A cross, or equivalent fitting, shall be placed in the water piping connection at every right angle to facilitate cleaning and inspection. Fuel cutoff devices embodying a separate chamber shall have a vertical drainpipe and a blowoff valve, not less than NPS $\frac{3}{4}$, located at the lowest point of the chamber or water-equalizing pipe connections so that the chamber and the equalizing pipe can be flushed and the device tested.

(d) A system may incorporate a time delay component with the low-water fuel cutoff device to prevent short cycling. This component shall not constrict any connecting piping, and the time delay shall not exceed the boiler manufacturer's recommended timing, or 90 sec, whichever is less. The device shall cut off the fuel or energy supply when the water falls to the lowest visible part of the gage glass.

Copyright ASME International
Provided by IHS under license with ASME
No reproduction or networking permitted without license from IHS

Not for Resale

CW-150 Requirements for Operating and Safety Controls for Electrically Heated Boilers

Electric resistance and electrode boilers shall have a boiler feed control system that shall maintain operating level in steam boilers and that shall maintain operating water pressure on hot-water boilers. Where uncovering of the electrical element can lead to an unsafe condition, the boiler shall be provided with low-water fuel cutoff(s) in accordance with Part CW. Boiler feed control and low-water fuel cutoff may be common to one control. In the case of electrode type boilers, where the reduction in water level provides a self-limiting control on input, low-water fuel cutoff controls are not required.

CW-200 AUTOMATIC FUEL CUTOFF FOR FORCED CIRCULATION BOILERS

CW-210 Requirements for Flow or Temperature Sensing Devices for Forced Circulation Boilers

(a) In lieu of the requirements for low-water fuel cutoffs in CW-100, a water tube or coil-type boiler, requiring forced circulation to prevent overheating and failure of the tubes or coils, shall have an acceptedsafety control to prevent burner operation at a flow rate inadequate to protect the boiler unit against overheating, at all allowable firing rates. This safety control shall shut down the burner and prevent restarting until an adequate flow is restored. Positive means shall be provided to determine during testing that the accepted safety control has functioned upon an inadequate flow condition. The positive means shall enable the accepted safety control to remain in the running safety lock circuitry during testing. The safety control must be automatically restored to service after completion of system testing.

(b) When there is a definitive waterline, a low-water fuel cutoff complying with the applicable portions of CW-100 shall be provided in addition to the sensing device required in the preceding paragraph. Functioning of the low-water fuel cutoff shall cause a safety shutdown and lockout.

CW-300 PRESSURE CONTROLS

CW-310 Requirements for Pressure Controls for Steam Boilers

(a) Each boiler pressure control shall conform to UL 353, Standard for Limit Controls, and shall be accepted by a nationally recognized testing agency.

(b) Each automatically fired steam boiler or system of commonly connected steam boilers shall have at least one steam pressure control device that will shut off the fuel supply to each boiler or system of commonly connected boilers when the steam pressure reaches a preset maximum operating pressure. This requirement does not preclude the use of additional operating control devices where required.

(c) In addition to the pressure control required in (b) above, each individual automatically fired steam boiler shall have a high steam pressure limit control that will prevent generation of steam pressure greater than the maximum allowable working pressure. Functioning of this control shall cause safety shutdown and lockout. The manual reset may be incorporated in the pressure limit control. Where the reset device is separate from the pressure limit control, a means shall be provided to indicate actuation of the pressure limit control. Each limit and operating control shall have its own sensing element and operating switch.

EXCEPTION: Lockout is not required for boiler units installed in residences, as defined by the authority having jurisdiction.

(d) A pressure limit control of the automatic or manual reset type shall be electrically connected in accordance with CE-110(i).

(e) No shutoff valve of any type shall be placed in the steam pressure connection between the boiler and the high-pressure limit control device and steam pressure control device or between the boiler and steam pressure control device.

(f) Each pressure control device shall be protected with a siphon, or equivalent means of maintaining a water seal, that will prevent steam from entering the control. The minimum size of a siphon shall be NPS $\frac{1}{4}$. Tubing suitable for the temperatures and pressures involved, with an inside diameter at least equal to standard pipe sizes, may be substituted for pipe. When a control incorporating a mercury switch is mounted on the siphon, the loop of the siphon shall be in a plane that is 90 deg (1.57 rad) from the plane of the mercury switch.

(g) Steam pressure supply connections to a single pressure control using pipe of nonferrous material shall not be less than NPS $\frac{1}{4}$ for lengths up to and including 5 ft (1.5 m), and not less than NPS $\frac{1}{2}$ for lengths over 5 ft (1.5 m). Tubing suitable for the temperatures and pressures involved, having an inside diameter at least equal to that of standard pipe, may be substituted for pipe.

(h) Steam pressure supply connections to a single pressure control using pipe of ferrous material shall not be less than NPS $\frac{1}{2}$ for lengths up to and including 5 ft (1.5 m), and not less than NPS 1 for lengths over 5 ft (1.5 m). Tubing suitable for the temperatures and pressures involved, having an inside diameter at least equal to that of standard pipe, may be substituted for pipe.

(i) Pressure controls should have separate pressure connections; however, manifolding is permitted. When multiple controls are fed from a manifold, the manifold and common source connection to the boiler, for pipe of nonferrous material, shall not be less than NPS $\frac{1}{2}$ for

Copyright ASME International
Provided by IHS under license with ASME
No reproduction or networking permitted without license from IHS
Not for Resale

lengths up to and including 5 ft (1.5 m), and not less than NPS $^{3}/_{4}$ for lengths over 5 ft (1.5 m). For manifolds using ferrous material, the manifold and common source connection to the boiler shall not be less than NPS $^{3}/_{4}$ for lengths up to and including 5 ft (1.5 m) and not less than NPS $1^{1}/_{4}$ for lengths over 5 ft (1.5 m). Individual controls are to be piped from the manifold according to the provisions of CW-310(g) and (h).

(j) The upper set point limit or the maximum fixed stop limit of the pressure control selected shall not exceed the maximum allowable working pressure of the boiler.

CW-400 TEMPERATURE CONTROLS

CW-410 Requirements for Temperature Controls for Hot-Water Heating and Supply Boilers

(a) Each temperature control device shall conform to UL 353, Standard for Limit Controls, and shall be accepted by a nationally recognized testing agency.

(b) Each automatically fired hot-water boiler or each system of commonly connected hot-water boilers shall have at least one temperature-actuated control to shut off the fuel supply when the system water reaches a preset operating temperature. This requirement does not preclude the use of additional operating control devices where required.

(c) In addition to the temperature control required in CW-410(b), each individual automatically fired hot-water boiler unit shall have a high temperature limit control that will prevent the water temperature from exceeding the maximum allowable temperature. The upper set point limit or the maximum fixed stop limit of the selected control shall not exceed the maximum allowable temperature. Functioning of this control shall cause safety shutdown and lockout. The manual reset may be incorporated in the temperature limit control. Where a reset device is separate from the temperature limit control, a means shall be provided to indicate actuation of the temperature limit control. Each limit and operating control shall have its own sensing element and operating switch.

EXCEPTION: Lockout is not required for boiler units installed in residences, as defined by the authority having jurisdiction.

(d) A temperature limit control of the automatic or manual reset type shall be electrically connected in accordance with CE-110(i).

CW-500 SAFETY AND SAFETY RELIEF VALVES

CW-510 Requirements for Steam and Hot-Water Heating Boilers

The safety and safety relief valves of all steam and hot-water heating boilers shall conform to the ASME Boiler and Pressure Vessel Code, Section I or IV, as applicable.

CW-520 Requirements of Hot-Water Supply Boilers

(a) Each hot-water supply boiler shall have at least one officially rated safety relief valve mounted directly on the boiler and set to relieve at or below the maximum allowable working pressure of the boiler. The required steam relieving capacity in Btu/hr (W) shall equal or exceed the maximum Btu/hr (W) output rating of the boiler.

(b) Each hot-water system consisting of a hot-water supply boiler and hot-water storage tank served by a hot-water supply boiler that is designed to operate at or below 210°F (99°C) shall have a temperature relief valve installed and set to relieve at or below 210°F (99°C). This valve shall be installed either in combination with that required in (a) above or within the top 6 in. (150 mm) of the system's hot-water storage tank.

(c) Safety relief valves shall be installed and tested in accordance with the ASME Boiler and Pressure Vessel Code. Temperature relief valves shall be rated, tested, and installed in accordance with ANSI Z21.22/CSA 4.4; combination pressure-temperature relief valves in accordance with ANSI Z21.22/CSA 4.4 for temperature and in accordance with the ASME Boiler and Pressure Vessel Code for pressure. **(04)**

CW-600 MODULAR BOILERS

CW-610 Water Level Controls for Modular Steam Heating Boilers

Modular steam heating boilers shall comply with CW-120, with the following differences:

(a) Each module shall be equipped with an automatic low-water fuel cutoff.

(b) The assembled modular steam boiler shall have a second low-water fuel cutoff mounted on a water column attached to the manifolds, or may be mounted on one of the modules, where the return piping is below the lowest safe waterline and all modules will drain equally. Operation of this low-water fuel cutoff shall shut off the fuel or energy supply to all modules.

CW-620 Pressure Controls for Modular Steam Heating Boilers

Modular steam heating boilers shall comply with CW-310, with the following differences:

(a) The assembled modular boiler shall have a pressure control that complies with CW-310(c). Operation of this control shall shut off the fuel or energy supply to all modules.

(b) Each module shall have a pressure control that complies with CW-310(b).

Copyright ASME International
Provided by IHS under license with ASME
No reproduction or networking permitted without license from IHS

Not for Resale

CW-630 Water Level Controls for Modular Hot-Water Boilers

Modular hot-water boilers shall comply with CW-130, with the following differences:

(a) The assembled modular boiler shall be protected by a low-water fuel cutoff located in the system piping such that it will detect a low-water condition before the level falls below the lowest safe waterline in any module.

(b) Operation of the low-water fuel cutoff shall shut off the fuel or energy supply to all modules.

CW-640 Temperature Controls for Modular Hot-Water Heating Boilers

Modular hot-water boilers shall comply with CW-410, with the following differences:

(a) The assembled modular boiler shall have a temperature control that complies with CW-410(c). Operation of this control shall shut off the fuel or energy supply to all modules.

(b) Each module shall have a temperature control that complies with CW-410(b).

Copyright ASME International
Provided by IHS under license with ASME
No reproduction or networking permitted without license from IHS

Not for Resale

Part CF
Combustion Side Control

CF-100 GAS-FIRED BOILER UNITS, EQUIPMENT

(04) CF-110 Burner Assemblies and Boiler Units

(a) Burner assemblies for boiler units having inputs in excess of 400,000 Btu/hr (117 228 W) shall comply with the provisions of this Part. Burner assemblies, as part of a boiler unit or separately, shall bear a label and/or be listed by a nationally recognized testing agency or other organization that is acceptable to the authority having jurisdiction as complying with the standards referenced below. For a burner provided as an integral part of a boiler unit, the label on the boiler unit may serve as evidence that the burner is in compliance.

(1) UL 795, Standard for Commercial-Industrial Gas Heating Equipment, or

(2) ANSI Z21.13/CSA 4.9, Gas-Fired Low Pressure Steam and Hot Water Boilers, or

(3) ANSI Z21.56/CSA 4.7, Gas-Fired Pool Heaters

(b) Boiler units having inputs of 400,000 Btu/hr (117 228 W) or less, with field-installed gas burner assemblies and boiler units that do not comply with ANSI Z21.13/CSA 4.9 shall comply with the provisions for purging, safety control timing, action on flame failure, loss of combustion air, combustion air proving, and fuel supervision given in Table CF-4 or CF-5, as applicable.

(c) Field installed oil-fired assemblies having inputs of 400,000 Btu/hr (117 228 W) or less shall bear a label and/or be listed by a nationally recognized testing agency or other organization that is acceptable to the authority havaing jurisdiction as comply with ANSI Z21.17/CSA 2.7, Standard for Domestic Gas Conversion Burners. The units on which they are installed shall comply with the provisions of this Standard.

(d) Boilers firing liquefied-petroleum gases or LP-gas air mixtures, that do not comply with ANSI Z21.13/CSA 4.9, which are installed indoors, shall be equipped with safety shutoff devices of the complete shutoff type. A safety shutoff device of the complete shutoff type is one that will shut off the flow of gas to both the main burner(s) and pilot burner(s) in the event of main flame, pilot flame, or ignition failure.

(e) The provisions of this Part are intended to apply to equipment supplied with gas pressures not in excess of the following:

(1) 10 psig (69 kPa gage) for boilers firing gas-air mixtures within the flammable range (i.e., 5% to 15% by volume natural gas in air and 2.15% to 9.6% by volume propane in air)

(2) 20 psig (140 kPa gage) for boilers firing liquefied-petroleum gas

(3) 60 psig (414 kPa gage) for all other boilers

CF-120 Fuel Train

(a) See Nonmandatory Appendix B for typical fuel train diagrams. Fuel train designs, other than those pictured in Nonmandatory Appendix B, but meeting the requirements of this Standard, shall be permitted. (04)

(b) Thread sealing compounds used on threaded joints of gas piping shall be resistant to the action of liquefied-petroleum gases.

CF-130 Filters or Strainers

Fuel cleaning equipment such as filters or strainers are recommended for use in the main gas supply line to the unit.

CF-140 Drip Legs

When a vertical section of piping supplied by the manufacturer is on the upstream side of the gas controls, a trap (drip leg) shall be included. When a vertical section of piping is not supplied, installation instructions shall require the installation of a trap at the inlet of the gas connection to the boiler.

CF-150 Manually Operated Gas Shutoff Valves

(a) Manually operated main shutoff and pilot shutoff valves, in sizes larger than NPS 2 or for pressures greater than $\frac{1}{2}$ psig (3.4 kPa gage), shall be ball or lubricated plug type, with stops. All manually operated valves shall be the lever-handled type and shall have the handle permanently attached, parallel to the gas flow when in the open position. The handle shall be accessible and shall clearly indicate the "on" and "off" positions.

(b) A readily accessible, manually operated valve shall be provided upstream from all other main gas line controls. The pilot gas supply shall be obtained upstream from this valve. The handle shall be located within 9 ft of the boiler and must be readily accessible from the boiler room floor.

(c) A manually operated pilot shutoff valve shall be located in the gas supply line to the pilot burner(s).

(d) A manually operated shutoff valve, as described in CF-150(a), shall be provided after the downstream

--`,,```,,,,````-`-`,,`,,`,`,,`---
Copyright ASME International
Provided by IHS under license with ASME
No reproduction or networking permitted without license from IHS
Not for Resale

safety shutoff valve for each main burner. A manually operated leak test valve (NPS $^1/_8$ or larger) shall be installed between the upstream valve and this manually operated valve. When two safety shutoff valves are provided in the fuel train, an additional leak test valve shall be installed after the upstream valve, or other provision shall be made so that each safety shutoff valve may be tested independently of the others. The outlet of the leak test valve(s) shall be plugged or capped, except when used for testing (see Nonmandatory Appendix B and Part CM).

(04) **CF-160 Gas-Pressure Regulators**

(a) Individual gas-pressure regulators or gas-pressure regulators that are part of a combination valve shall be furnished for both pilot fuel lines (if a pilot is used) and main fuel lines of gas-fired boiler units in accordance with ANSI Z21.78/CSA 6.20, Combination Controls for Gas Appliances. The gas pressure at the outlet of the regulator shall be within plus or minus 10% of the regulation set point at all firing rates.

(b) Gas-pressure regulators incorporating integral vent limiters shall comply with the applicable provisions of ANSI Z21.18/CSA 6.3, Gas Appliance Pressure Regulators.

(c) Second stage gas-pressure regulators on boilers firing liquefied-petroleum gas or LP-gas air mixtures shall comply with UL 144, Standard for LP-Gas Regulating, and shall be installed in accordance with the NFPA 58, Liquefied-Petroleum Gas Code.

CF-161 Overpressure Protection

(a) When the maximum allowable working pressure of any component is less than the gas pressure entering a building, so that failure of a gas system pressure regulator would produce downstream pressures greater than that rating, the downstream piping system shall be provided with overpressure protection.

(b) Gas overpressure protection devices, if required, shall be located upstream of all operating and safety controls and in both the main burner and, if applicable, the pilot burner gas supply system. The gas overpressure protection devices shall be vented to a safe point of discharge, if required.

(c) Refer to CG-210 for additional requirements.

CF-162 Pressure Switches

(a) Gas pressure supervision shall be provided on gas trains, as specified in Table CF-1 or CF-2, by pressure switches interlocked to accomplish a safety shutdown and lockout in the event of either high or low gas pressure. The pressure switch monitoring high gas pressure shall function to cause safety shutdown and lockout before the manifold gas pressure exceeds 150% of the boiler/burner's main manifold gas pressure. The pressure switch monitoring low gas pressure shall function to cause safety shutdown and lockout before the manifold gas pressure is less than 50% of the boiler/burner's main manifold gas pressure.

(b) Gas pressure switches shall bear a label and/or be listed by a nationally recognized testing agency.

(c) The low gas pressure switch shall be located upstream of the safety shutoff valve(s). The high gas pressure switch shall be located downstream of the gas pressure regulator and may be located downstream of all main burner gas supply controls. When the low gas pressure switch is located upstream of the main gas-pressure regulator, the burner shall be listed and/or labeled by a nationally recognized testing agency for this arrangement.

(d) Gas pressure switches shall be capable of withstanding without damage a pressure of not less than 10% above the relieving pressure of the nearest upstream relief device. Where no relief device is provided, the gas pressure switches shall be capable of withstanding without damage a pressure of not less than the maximum inlet pressure of the nearest upstream gas-pressure regulator.

(e) Gas pressure switches of the automatic or manual reset type shall be electrically connected in accordance with CE-110(i).

CF-170 Control Valves

(a) An automatic input, complete closure, control valve may be combined with a safety shutoff valve.

(b) A bypass to provide for a minimum flame may be installed around a valve used to control input only. A bypass shall not be installed around a safety shutoff valve or a combination input control and safety shutoff valve.

CF-180 Safety Shutoff Valves

(a) Each main burner supply line shall be equipped with a safety shutoff valve(s) that shall comply with the applicable provisions of ANSI Z21.21/CSA 6.5, Automatic Valves for Gas Appliances, or UL 429, Standard for Electrically Operated Valves.

(b) The burner supply line shall be equipped as indicated below for the applicable input classification or any greater input classifications:

(1) Greater than 400,000 Btu/hr (117 228 W) and less than or equal to 5,000,000 Btu/hr (1 465 356 W). For boiler units having inputs greater than 400,000 Btu/hr (117 228 W) but less than or equal to 5,000,000 Btu/hr (1 465 356 W), the main burner supply shall be equipped with two safety shutoff valves in series that may be in a single valve body or one valve with a valve seal overtravel (proof of closure) interlock function. If the two safety shutoff valves are in a single valve body, the two safety valve ports shall be in series leading to the valve outlet and shall have independently operated valve shafts.

Copyright ASME International
Provided by IHS under license with ASME
No reproduction or networking permitted without license from IHS
Not for Resale

Copyright ASME International
Provided by IHS under license with ASME
No reproduction or networking permitted without license from IHS

(04)

Table CF-1 Safety Controls for Automatically Fired Units: Power Gas Burners and Mechanical Draft Atmospheric Gas Burners

Safety Control	Greater Than 400,000 Btu/hr (117 228 W) and Less Than or Equal to 2,500,000 Btu/hr (732 678 W)	Greater Than 2,500,000 Btu/hr (732 678 W) and Less Than or Equal to 5,000,000 Btu/hr (1 465 356 W)	Greater Than 5,000,000 Btu/hr (1 465 356 W) and Less Than or Equal to 12,500,000 Btu/hr (3 663 389 W)
Purge requirements	Four air changes in 90 sec, or at 60% damper opening, with both damper opening and air flow proven [Note (1)] Air changes to include fire box and boiler passes Instructional requirement: 5 min shutoff before lighting constant pilot	Four air changes at 60% damper opening with both damper opening and air flow proven [Note (1)]	Four air changes at 60% damper opening with both damper opening and air flow proven
Pilot flame type and establishing period			
Continuous	15 sec (initial start only)	Not permitted	Not permitted
Interrupted	15 sec	10 sec	10 sec
Intermittent	15 sec	Not permitted	Not permitted
Main burner ignition type and establishing period	Pilot only: 15 sec max. if interrupted pilot used Direct: 4 sec max.	Interrupted pilot only, 10 sec max. Direct: 4 sec max. [Note (2)]	Interrupted pilot only, 10 sec max.
Flame failure response time	4 sec max.	4 sec max.	4 sec max.
Valve closing time	5 sec max. after de-energization	1 sec max.	1 sec max.
Action on flame failure	Safety shutdown and lockout. A single recycle is allowed only for ignition systems with pilots.	Safety shutdown and lockout	Safety shutdown and lockout
Action on power or control input interruption after safety shutdown and lockout	Manual reset required in accordance with CG-610	Manual reset required in accordance with CG-610	Manual reset required in accordance with CG-610
Proven low fire start	Not required	See CF-610	See CF-610
Combustion air proving — action on loss of combustion air	Required: safety shutdown and lockout or recycle once only for ignition systems with pilots	Required: safety shutdown and lockout	Required: safety shutdown and lockout
Fuel pressure supervision	Not required for ignition systems with pilots. Required for direct ignition systems: high and low gas pressure arranged to cause safety shutdown and lockout.	Required: high and low gas pressure arranged to cause safety shutdown and lockout	Required: high and low gas pressure arranged to cause safety shutdown and lockout

GENERAL NOTE: Timings shown above shall be within the tolerances established by the nationally recognized testing agency where the primary safety controls are labeled and/or listed [see CF-310(c) and CF-510(c)].

NOTES:

(1) For dampers with a fixed mechanical stop, see CF-210(a)(1) and CF-210(a)(2).

(2) Maximum input at light off shall be less than or equal to 2,500,000 Btu/hr (732 678 W).

Not for Resale

Copyright ASME International
Provided by IHS under license with ASME
No reproduction or networking permitted without license from IHS

Table CF-2 Safety Controls for Automatically Fired Units: Atmospheric Gas Burners — Natural Draft

Safety Control	Greater Than 400,000 Btu/hr (117 228 W) and Less Than or Equal to 2,500,000 Btu/hr (732 678 W)	Greater Than 2,500,000 Btu/hr (732 678 W) and Less Than or Equal to 5,000,000 Btu/hr (1 465 356 W)	Greater Than 5,000,000 Btu/hr (1 465 356 W) and Less Than or Equal to 12,500,000 Btu/hr (3 663 389 W)
Purge Requirements	None, if unrestricted air passages; if automatic burner dampers are used, prove open 90 sec Instructional requirement: 5 min fuel shutoff before lighting constant pilot		
Pilot flame type and establishing period			
Continuous	15 sec (initial start only)	10 sec (initial start only)	10 sec (initial start only)
Interrupted	15 sec	10 sec	10 sec
Intermittent	15 sec	10 sec	10 sec
Main burner ignition type and establishing period	Pilot only; 15 sec max. if interrupted pilot used, 25 to 30 sec if safety shutoff valve has full opening	Pilot only; 10 sec max. for modulating or high-low firing	Pilot only; 10 sec max.
Flame failure response time	4 sec max.	4 sec max.	4 sec max.
Valve closing time	5 sec max.	1 sec max.	1 sec max.
Action on flame failure	Safety shutdown and lockout or recycle once after 5 min time delay	Safety shutdown and lockout or recycle once after 5 min time delay	Safety shutdown and lockout or recycle once after 5 min time delay
Proven low fire start	Not required	See CF-610	See CF-610
Combustion air proving — action on loss of combustion air	Not applicable	Not applicable	Not applicable
Fuel pressure supervision	Not required	Required: high and low gas pressure arranged to cause safety shutdown and lockout	Required: high and low gas pressure arranged to cause safety shutdown and lockout

GENERAL NOTE: Timings shown above shall be within the tolerances established by the nationally recognized testing agency where the primary safety controls are labeled and/or listed [see CF-310(c) and CF-510(c)].

Not for Resale

(2) Greater than 5,000,000 Btu/hr (1 465 356 W) and less than or equal to 12,500,000 Btu/hr (3 663 389 W). For boiler units having inputs greater than 5,000,000 Btu/hr (1 465 356 W) and less than or equal to 12,500,000 Btu/hr (3 663 389 W), the main burner supply line shall be equipped with two safety shutoff valves in series, that may be in a single valve body. At least one of the valves shall incorporate a valve seal overtravel (proof of closure) interlock function. If the two safety shutoff valves are in a single valve body, the two safety valve ports shall be in series leading to the valve outlet and shall have independently operated valve shafts. At least one of the two safety valve ports in the single valve body shall incorporate a valve seal overtravel interlock (proof of closure) function. When the input of a branch gas supply is greater than 2,500,000 Btu/hr (732 678 W), the branch valve requirements are determined by the branch input.

(c) The pilot gas supply line shall be equipped with a safety shutoff valve.

(d) Safety shutoff valves shall bear a label and/or be listed by a nationally recognized testing agency.

(e) Safety shutoff valves shall have a shutoff time not to exceed that specified in Table CF-1, CF-2, CF-4, or CF-5.

(f) Safety shutoff valves shall be capable of withstanding without damage a pressure of not less than 10% above the relieving pressure of the nearest upstream relief device. In case no relief device is provided, the gas valves shall be capable of withstanding without damage a pressure of not less than the maximum inlet pressure of the nearest upstream gas-pressure regulator.

CF-190 Atmospheric Vents and Gas Vent, Bleed, or Relief Lines

(a) Gas-pressure regulators including second stage LP-gas-pressure regulators, not incorporating integral vent limiters, pressure interlock switches, and all other valve train components requiring atmospheric air pressure to balance a diaphragm or other similar device, shall be provided with a pipe-threaded connection for the vent line. These lines shall be sized in accordance with the component manufacturer's instructions. For second stage LP-gas-pressure regulators, the relief line shall be at least the same size as the outlet of the pressure relieving device. Vent and relief lines shall be piped by the installer to the outdoors at a safe point of discharge as determined by the authority having jurisdiction. A means shall be provided at the terminating point to prevent blockage of the line by foreign material, moisture, or insects. Where there is more than one gas-pressure regulator at a location, each gas-pressure regulator shall have a separate vent to the outdoors at a safe point of discharge as determined by the authority having jurisdiction. If approved by the authority having jurisdiction, the vent lines may be manifolded in accordance with accepted engineering practices [see CF-190(b) and (c)] to minimize back pressure in the event of diaphragm failure.

(b) Atmospheric vent lines, when manifolded, shall be connected into a common atmospheric vent line having a cross-sectional area not less than the area of the largest vent line plus 50% of the areas of the additional vent lines.

(c) Atmospheric vent lines shall not be connected to any common or manifolded gas vent, bleed, or relief lines.

(d) Gas vent, bleed, or relief lines shall have provisions to be piped by the installer to the outdoors at a safe point of discharge as determined by the authority having jurisdiction. A means shall be provided at the terminal point to prevent stoppage of the lines by foreign material, moisture, or insects. However, a gas bleed line from a diaphragm control valve and vent line from a pressure regulator may be vented to a constant burning pilot. An internal (within the valve) gas bleed line from a diaphragm control valve or combination valve/regulator is allowed, with or without a continuous pilot, if the construction of the valve is such that when a valve is in the closed position a damaged main diaphragm will not allow gas to flow through the bleed line to the main burner. At locations where gas-pressure regulators might be submerged during floods, a special antiflood type breather vent fitting shall be installed, or the vent line shall be extended above the height of the expected flood waters.

(e) The bleed line from a diaphragm control valve or a vent line from a pressure regulator to a constant burning pilot shall terminate in burner tips made of metal having a melting point greater than 1,450°F (788°C). These tips shall be located so that the escaping gas will be readily ignited by the pilot flame. Bleed line burners shall be securely held so that the ports are in a fixed position in relation to the pilot flame. A gas-pressure regulator shall not be vented into the boiler flue or exhaust system.

(f) Gas pressure relief valves may discharge into common manifolding only with other gas vent, bleed, or relief lines. When manifolded, the common vent line shall have a cross-sectional area not less than the area of the largest vent line plus 50% of the areas of the additional vent lines.

CF-200 GAS-FIRED BOILER UNITS, PURGING

CF-210 Preignition Purging (See Table CF-1 or CF-2)

(a) Power gas burners and mechanical draft atmospheric gas burners shall provide for preignition purging of the fire box and passes as indicated below for the applicable input classification or any greater input classification.

(1) For boiler units having inputs less than or equal to 2,500,000 Btu/hr (732 678 W), a purge period shall

Copyright ASME International
Provided by IHS under license with ASME
No reproduction or networking permitted without license from IHS

Not for Resale

provide no fewer than four air changes — either in 90 sec, or at 60% damper opening with both damper opening and air flow proven. Boiler units less than or equal to 5,000,000 Btu/hr (1 145 356 W) input utilizing burners listed and/or labeled by a nationally recognized testing agency and designed with a fixed mechanical stop to prevent the damper from going below an air flow rate at least equivalent to that provided for combustion at 60% of the rated high-fire input, are exempt from proving damper opening.

(2) For boiler units having inputs greater than 2,500,000 Btu/hr (732 678 W), a purge period shall provide no fewer than four changes at 60% damper opening with both damper opening and air flow proven. Boiler units less than or equal to 5,000,000 Btu/hr (1 145 356 W) input utilizing burners listed and/or labeled by a nationally recognized testing agency and designed with a fixed mechanical stop to prevent the damper from going below an air flow rate at least equivalent to that provided for combustion at 60% of the rated high-fire input, are exempt from proving damper opening.

(b) Lightoff instructions for boiler units equipped with manually lighted, constant burning pilots shall specify a 5 min complete shutoff period before the pilot is lighted.

(c) Natural draft atmospheric gas burners equipped with an automatically operated air shutter or damper which is closed or positioned to restrict the passage of air when the burner is not firing shall provide means to open such air shutters or dampers to the high-fire position for a period of at least 90 sec immediately before each lightoff cycle is initiated. Compliance with ANSI Z21.13/CSA 4.9 satisfies the intent of this provision.

CF-220 Control

Boiler units having forced or induced draft fans, or both, shall be arranged to shut off the gas supply upon failure of the combustion air. Boiler units having inputs greater than 400,000 Btu/hr (117 228 W) and less than or equal to 2,500,000 Btu/hr (732 678 W) may recycle once upon loss of combustion air, before the establishment of safety shutdown. For such boiler units having inputs greater than 2,500,000 Btu/hr (732 678 W), safety shutdown and lockout shall be established upon loss of combustion air.

CF-300 GAS-FIRED BOILER UNITS, SAFETY CONTROLS

CF-310 Primary Safety Control

(a) Each main burner assembly shall be provided with a primary safety control that will deenergize the main gas shutoff valve(s) and shut off pilot fuel upon loss of flame at the point of supervision as specified in CF-330.

(b) The response time of the primary safety control to deenergize or activate the gas shutoff device shall not exceed the values shown in Tables CF-1, CF-2, CF-4, and CF-5.

(c) Primary safety controls shall bear a label and/or be listed by a nationally recognized testing agency.

(d) Primary safety controls shall require local manual intervention by an operator or service technician to reset. Devices that can electronically reset without local manual intervention, such as when power or control input to the device is interrupted and then restored, shall not be permitted. (04)

(e) Supervision of the main burner flame alone shall begin at the end of the main burner flame-establishing period for

(1) power gas burners and mechanical draft atmospheric gas burners having inputs greater than 2,500,000 Btu/hr (732 678 W)

(2) all types of burners with modulating or high-low firing having inputs greater than 2,500,000 Btu/hr (732 678 W)

(3) all types of burners with an interrupted pilot(s)

(4) natural draft atmospheric gas burners having inputs greater than 5,000,000 Btu/hr (1 465 356 W)

(f) The main burner flame-establishing period shall not exceed the values shown in Tables CF-1, CF-2, CF-4, and CF-5.

CF-320 Automatic Ignition Devices

(a) Automatic ignition devices using pilots shall comply with the following:

(1) Gas to pilots shall be automatically shut off if the pilot is not proved.

(2) The pilot type and flame-establishing period shall meet the provisions shown in Tables CF-1, CF-2, CF-4, and CF-5.

(3) The flame failure response time for additional pilots used for smooth lightoff shall not exceed 90 sec.

(b) A single direct ignition system may be used on a boiler unit that has a natural draft atmospheric gas burner with a total input less than or equal to 400,000 Btu/hr (117 228 W). This direct ignition system shall meet the provisions shown in Table CF-4.

(c) Multiple direct ignition systems may be used on a boiler unit that has a natural draft atmospheric gas burner with a total input less than or equal to 2,500,000 Btu/hr (732 678 W) and an input less than or equal to 400,000 Btu/hr (117 228 W) per ignition system. There shall be no interconnection between combustion zones served by separate ignition systems at any point below the draft hood or, if no draft hood is used, below the flue outlet.

Each direct ignition system shall meet the provisions shown in Table CF-4.

(d) A direct ignition system may be used on a boiler unit that has a power gas burner or a mechanical draft atmospheric gas burner with a total input less than or equal to 5,000,000 Btu/hr (1 465 356 W) and a maximum

Copyright ASME International
Provided by IHS under license with ASME
No reproduction or networking permitted without license from IHS
Not for Resale

input at ignition less than or equal to 2,500,000 Btu/hr (732 678 W). This direct ignition system shall meet the provisions shown in Table CF-1 if the total input is greater than 400,000 Btu/hr (117 228 W). This direct ignition system shall meet the provisions shown in Table CF-5 if the total input is less than or equal to 400,000 Btu/hr (117 228 W).

CF-330 Action on Flame Failure

(a) Loss of flame at the point of supervision shall result in a safety shutdown and lockout for one of the following:

(1) power gas burners and mechanical draft atmospheric gas burners having inputs greater than 2,500,000 Btu/hr (732 678 W)

(2) any type of burner equipped with a continuous pilot

(3) any type of burner equipped with an interrupted pilot or direct ignition system

(4) any type of burner equipped with an intermittent pilot

(b) The ignition means may be automatically reactivated for one attempt to relight following loss of flame at the point of supervision for

(1) power gas burners and mechanical draft atmospheric gas burners having inputs less than or equal to 2,500,000 Btu/hr (732 678 W), provided the preignition purging time specified in CF-210 has elapsed

(2) natural draft atmospheric gas burners, provided the unit is equipped with a delay timer requiring an enforced waiting period of at least 5 min

CF-400 OIL-FIRED BOILER UNITS, EQUIPMENT

CF-410 Burner Assemblies

(a) Burner assemblies that have a maximum nameplate fuel input rating greater than 3 gph (11.4 L/h) shall comply with the provisions of this Part. Burner assemblies, as part of a boiler unit or separately, shall bear a label and/or be listed by a nationally recognized testing agency or other organization that is acceptable to the authority having jurisdiction as complying with the standards referenced below. For a burner provided as an integral part of a boiler unit, the label on the boiler unit may serve as evidence that the burner is in compliance.

(1) UL 296, Standard for Oil Burners; or

(2) UL 726, Standard for Oil-Fired Boiler Assemblies.

(b) Boiler units that have fuel input ratings less than or equal to 3 gph (11.4 L/h), with field-installed oil burner assemblies and boiler units that do not comply with UL 726 shall comply with the provisions for purging, safety control timing, action on flame failure, loss of combustion air, combustion air proving, and fuel supervision given in Table CF-5.

(c) Field installed oil-fired assemblies having inputs of 3 gph (11.4 L/h) or less shall bear a label and/or be listed by a nationally recognized testing agency or other organization that is acceptable to the authority having jurisdiction as comply with UL 296. The units on which they are installed shall comply with the provisions of this Standard. (04)

CF-420 Fuel Train

See Nonmandatory Appendix B for typical fuel train diagrams.

CF-430 Filters or Strainers

Filters and strainers shall be installed upstream from the safety shutoff valve(s).

CF-440 Relief Valves

(a) A pressure relief valve shall be connected to a fuel line in which pressure greater than system design pressure may build up from closing of any valve in the burner assembly or from oil heated by a preheater.

(b) The relief line from the relief valve shall discharge into the return line, the oil tank, or the pump suction line.

CF-450 Pressure and Temperature Switches

(a) All oil supplied to the main burner shall be supervised by a low oil pressure interlock switch for systems greater than 20 gph (75.7 L/h) (except for rotary cup burners), unless the oil pump is integral with the burner's motor shaft, to cause a safety shutdown and lockout if oil pressure falls below manufacturer's design pressure.

(b) Atomizing media (air or steam) shall be supervised by a low-pressure interlock switch to cause safety shutdown and lockout if atomizing media pressure falls below the manufacturer's design pressure.

(c) A high oil temperature supervisory interlock switch shall be provided for all preheated oil systems to cause a safety shutdown and lockout when the oil temperature exceeds preset limits.

(d) For low oil temperature supervision, an interlock switch shall be provided to cause safety shutdown and allow circulation to reestablish preset oil temperature.

CF-460 Safety Shutoff Valves

(a) Two approved safety shutoff valves or one safety shutoff valve and a nozzle cutoff valve integral to the fuel unit shall be provided. The safety shutoff valves shall conform to UL 429, Standard for Electrically Operated Valves. A nozzle cutoff valve integral to the fuel unit shall conform to UL 343, Standard for Pumps for Oil Burning Appliances.

It is recommended that whenever shutoff valves can trap oil between two valves or between a check valve and a safety shutoff valve, a relief valve be used to prevent hydraulic pressure increases in the line, as trapped oil absorbs heat.

Copyright ASME International
Provided by IHS under license with ASME
No reproduction or networking permitted without license from IHS

Not for Resale

(b) A safety shutoff valve responding to pressure variations in a hydraulic or pneumatic remote control system shall close upon failure of pressure in the control system.

(c) The pressure rating of the safety shutoff valve shall not be less than the maximum pump pressure.

(d) Safety shutoff valves shall have a shutoff time not to exceed that shown in Table CF-3.

CF-470 Oil-Fired Boiler Units, Purging (See Table CF-3)

Oil burners shall provide for purging the firebox and boiler passes as indicated below for the applicable input classification.

(a) For boiler units that have a maximum nameplate fuel input rating greater than 7 gph (26.5 L/h) and less than or equal to 20 gph (75.7 L/h) and where the oil pump is driven independently of the burner fan motor, a preignition purge of no fewer than four air changes — either in 90 sec or at 60% damper opening with both damper opening and air flow proven.

Boiler units less than or equal to 5,000,000 Btu/hr input utilizing burners listed and/or labeled by a nationally recognized testing agency and designed with a fixed mechanical stop to prevent the damper from going below an air flow rate at least equivalent to that provided for combustion at 60% of the rated high-fire input, are exempt from proving damper opening.

(b) For boiler units that have a maximum nameplate fuel input rating greater than 20 gph (75.7 L/h)

(1) a preignition purge of no fewer than four air changes at 60% damper opening with both damper opening and air flow proven

(2) a postpurge of 15 sec

Boiler units less than or equal to 5,000,000 Btu/hr input utilizing burners listed and/or labeled by a nationally recognized testing agency and designed with a fixed mechanical stop to prevent the damper from going below an air flow rate at least equivalent to that provided for combustion at 60% of the rated high-fire input, are exempt from proving damper opening.

CF-480 Control

Safety shutdown and lockout shall be established upon loss of combustion air for boiler units that have a maximum nameplate fuel input rating greater than 20 gph (75.7 L/h). Boiler units that have a maximum nameplate fuel input rating less than or equal to 20 gph (75.7 L/h), where the forced or induced draft fans are not integral with the burner motor shaft, shall be equipped with means to shut off the burner upon failure of the air supply.

CF-500 OIL-FIRED BOILER UNITS, SAFETY CONTROLS

CF-510 Primary Safety Control

(a) Each main burner assembly shall be equipped with a primary safety control that will deenergize the shutoff means upon loss of flame at the point of supervision.

(b) The response time of the primary safety control to deenergize or deactivate the shutoff device shall not exceed the values shown in Table CF-3.

(c) Primary safety controls shall bear a label and/or be listed by a nationally recognized testing agency.

(d) The main burner flame-establishing period shall not exceed the values shown in Table CF-3.

(e) Primary safety controls shall require local manual intervention by an operator or service technician to reset. Devices that can electrically reset without local manual intervention such as when power to the device is interrupted and then restored shall not be permitted.

CF-520 Automatic Ignition Devices

(a) Where automatically ignited pilots are used, the pilot flame shall be proved prior to energizing the main fuel supply means. Fuel to pilots shall be automatically shut off if the pilot is not proved.

(b) The pilot type and flame-establishing period shall meet the provisions shown in Table CF-3.

(c) The application of direct spark ignition systems is limited to boiler units having initial inputs less than or equal to 20 gph (75.7 L/h).

(d) The fuel train to pilots shall meet the applicable provisions of this Standard.

CF-530 Action on Flame Failure

Loss of flame at the point of supervision shall result in closing the main fuel valve. The ignition means may be automatically reactivated once for boiler units that have a maximum nameplate fuel input rating less than or equal to 20 gph (75.7 L/h), providing the preignition purging time specified in CF-470 has elapsed. Safety shutdown and lockout shall be established for boiler units that have a maximum nameplate fuel input rating greater than 20 gph (75.7 L/h).

CF-600 LOW FIRE START, GAS- OR OIL-FIRED BOILER UNITS

CF-610 Low Fire Start

Boiler units having inputs greater than 2,500,000 Btu/hr (732 678 W) (gas-fired) or a maximum nameplate fuel input rating greater than 20 gph (75.7 L/h) (oil-fired) shall be equipped with an interlocked damper to provide for low fire starts. However, boiler units that bear a label and/or listing by a nationally recognized

Copyright ASME International
Provided by IHS under license with ASME
No reproduction or networking permitted without license from IHS
Not for Resale

Copyright ASME International
Provided by IHS under license with ASME
No reproduction or networking permitted without license from IHS

Table CF-3 Safety Controls for Automatically Fired Units: Oil-Fired Burners

Safety Control	Greater Than 3 gph (11.4 L/h) [approx. 400,000 Btu/hr (117 228 W)] and Less Than or Equal to 20 gph (75.7 L/h) [approx. 2,800,000 Btu/hr (820 599 W)]	Greater Than 20 gph (75.7 L/h) [approx. 2,800,000 Btu/hr (820 599 W)]
Purge requirements	When oil pump operates independently of the burner, four air changes in 90 sec or at 60% damper opening, with damper opening and air flow proven if total input is in excess of 7 gph (26.5 L/h) [approx. 1,000,000 Btu/hr (293 071 W)] [Note (1)]	Four air changes at 60% damper opening with both damper opening and air flow proven [Note (1)]
Postpurge	Not required	15 sec min.
Pilot type and establishing period		
Continuous	Not permitted	Not permitted
Intermittent	Not permitted	Not permitted
Interrupted	10 sec max. if pilot is used	Required: 10 sec max. Exception: see Note (2)
Main burner ignition type and establishing period	Interrupted pilot, 15 sec max. Intermittent direct spark, 15 sec max. Interrupted direct spark, 15 sec max.	Interrupted pilot only Exception: see Note (2) Nos. 2 and 4 oil — 10 sec max. Nos. 5 and 6 oil — 15 sec max.
Flame failure response time	Intermittent direct spark ignition, greater than 3 and less than or equal to 7 gph (11.4 L/h to 26.5 L/h), 15 sec max. Intermittent direct spark ignition, greater than 7 and less than or equal to 20 gph (26.5 L/h to 75.7 L/h), 4 sec max. Interrupted pilot or direct spark ignition, greater than 3 and less than or equal to 20 gph (11.4 L/h to 75.7 L/h), 4 sec max.	4 sec max.
Valve closing time	5 sec max. after de-energization	1 sec max.
Action of flame failure	Safety shutdown and lockout or recycle once [Note (3)]	Safety shutdown and lockout
Proven low fire start	Not required	See CF-610
Combustion air proving — action on loss of combustion air	Required if fans not integral with burner motor shaft; safety shutdown and lockout or recycle once	Required: safety shutdown and lockout
Fuel pressure supervision	Not required	Required if oil pump not integral with burner motor shaft. See CF-450.
Low atomizing media supervision	Required unless atomization by air pump integral with burner motor shaft. See CF-450(b).	Required. See CF-450(b).
Oil temperature supervision	High and low temperature supervision required on preheated oil. Excess temperature shall cause safety shutdown and lockout.	High and low temperature supervision required on preheated oil. Excess temperature shall cause safety shutdown and lockout.

GENERAL NOTE: Timings shown above shall be within the tolerances established by the nationally recognized testing agency where the primary safety controls are labeled and/or listed [see CF-310(c) and CF-510(c)].

NOTES:

(1) For dampers with a fixed mechanical stop, see CF-470(a) and (b)(1).

(2) With proven low fire start at a low fire input rate of not more than 20 gph (75.7 L/h), interrupted pilot or direct spark allowed. Main burner establishing period: 15 sec max.

(3) No recycle permitted when nominal 15 sec flame failure response time is used.

Not for Resale

testing agency shall be accepted without such interlocking controls.

CF-700 COMBINATION GAS- AND OIL-FIRED UNITS

CF-710 Burner Assemblies

Burner assemblies having gas inputs greater than 400,000 Btu/hr (117 228 W) and oil inputs that have a maximum nameplate fuel input rating greater than 3 gph (11.4 L/h) shall comply with the provisions of Part CF. Burner assemblies, as part of a boiler unit or separately, shall bear a label and/or be listed by a nationally recognized testing agency or other certifying organization that is acceptable to the authority having jurisdiction as complying with:

(a) UL 795, Standard for Commercial-Industrial Gas Heating Equipment; and

(b) UL 296, Standard for Oil Burners, or UL 726, Standard for Oil-Fired Boiler Assemblies.

CF-800 ELECTRICALLY HEATED BOILERS

CF-810 General

Electrically heated boilers for steam or hot-water service in sizes greater than 115 kW (approximately 400,000 Btu/hr) shall comply with the following provisions.

(04) *(a)* Electric resistance type boilers shall be listed by a nationally recognized testing agency as complying with UL 834, Standard for Heating, Water Supply, and Power Boilers — Electric.

(b) Electrode type boilers shall be designed for single-phase, three-wire or three-phase, four-wire operation and shall conform to the requirements of NFPA 70, National Electrical Code.

CF-900 COMBUSTION SIDE CONTROLS FOR MODULAR BOILERS

CF-910 Gas Modular Boilers

The modules of gas modular boilers shall comply with CG-110(a) and CG-110(c).

Boiler units with field-installed gas burner assemblies and boiler units that do not comply with ANSI Z21.13/CSA 4.9, shall comply with the provisions for purging, safety control timing, action on flame failure, loss of combustion air, combustion air proving, and fuel supervision given in Table CF-4 or CF-5, as applicable.

CF-920 Oil Modular Boilers

The modules of oil modular boilers shall comply with CG-110(d) and CG-110(e).

Boiler units with field-installed oil burner assemblies and boiler units that do not comply with UL 726, shall comply with the provisions for purging, safety control timing, action on flame failure, loss of combustion air, combustion air proving, and fuel supervision given in Table CF-3.

CF-930 Electric Modular Boilers

The modules of electric modular boilers shall comply with CG-110(f).

Copyright ASME International
Provided by IHS under license with ASME
No reproduction or networking permitted without license from IHS
Not for Resale

Copyright ASME International
Provided by IHS under license with ASME
No reproduction or networking permitted without license from IHS

Table CF-4 400,000 Btu/hr (117 228 W) and Smaller (Gas — Natural Draft)

Safety Control	Pilot Ignition Gas			Direct Ignition System
	Continuous Pilot	Intermittent Pilot	Interrupted Pilot	
Purge requirements [Note (1)]	None	None	None	None
Pilot flame establishing period	None	15 sec max.	15 sec max.	Not applicable
Main burner flame establishing period	None	None	15 sec max.	15 sec max.
Flame failure response time [Note (2)]				
Pilot	180 sec max.	4 sec max.	4 sec max.	Not applicable
Main burner	Not applicable	Not applicable	4 sec max.	4 sec max.
Valve closing time	Not applicable	5 sec max. after de-energization	5 sec max. after de-energization	5 sec max. after de-energization
Action on pilot flame failure [Note(1)]	Safety shutdown	Safety shutdown [Note (2)]	Not applicable	Not applicable
Action on main burner flame failure [Note (1)]	Not applicable	Not applicable	Safety shutdown [Note (2)]	Safety shutdown [Note (2)]

NOTES:
(1) After safety shutdown, wait 5 min before resetting ignition system. (Instructional requirement.)
(2) If the ignition system includes a relight feature, the relight attempt shall be initiated within 0.8 sec upon loss of flame.

Not for Resale

Copyright ASME International
Provided by IHS under license with ASME
No reproduction or networking permitted without license from IHS

Table CF-5 400,000 Btu/hr (117 228 W) and Smaller (Power Gas Burners and Mechanical Draft Atmospheric Gas Burners), 3 gph (11.4 L/h) and Smaller (Oil)

	Pilot Ignition Gas			Direct Ignition System	
Safety Control	Continuous Pilot	Intermittent Pilot	Interrupted Pilot	Gas	Oil
Purge requirements [Note (1)]	None	None	None	None	None
Pilot flame establishing period	None	15 sec max.	15 sec max.	Not applicable	Not applicable
Main burner establishing period	None	None	15 sec max.	15 sec max.	30 sec max.
Flame failure response time					
Pilot	180 sec max.	4 sec max.	4 sec max.	Not applicable	Not applicable
Main burner	Not applicable	Not applicable	4 sec max.	4 sec max.	30 sec max.
Valve closing time	None	5 sec max. after de-energization	5 sec max. after de-energization	5 sec max. after de-energization	Not applicable
Action on pilot flame failure	Safety shutdown	Safety shutdown [Note (1)]	None	Not applicable	Not applicable
Action on main burner flame failure	None	None	Safety shutdown [Note (2)]	Safety shutdown [Note (2)]	Safety shutdown [Note (2)]
Combustion air proving action on loss of combustion air	Mechanical draft — close main gas valve and recycle	Mechanical draft — close main gas valve and recycle	Mechanical draft — close main gas valve and recycle	Mechanical draft — close main gas valve and recycle	Safety shutdown required if fan not integral with burner motor shaft
Fuel pressure supervision	None	None	None	None	None

NOTES:
(1) After safety shutdown, wait 5 min before resetting ignition system. (Instructional requirement.)
(2) If ignition system includes a relight feature, the relight attempt shall be initiated within 0.8 sec upon loss of flame.

Not for Resale

--`,,```,,,,````-`-`,,`,,`,`,,`---

Copyright ASME International
Provided by IHS under license with ASME
No reproduction or networking permitted without license from IHS

Not for Resale

NONMANDATORY APPENDIX A
COMPARISON OF THIS STANDARD AND ANSI Z21.13/CSA 4.9

(04)

Where permitted in ASME CSD-1, boilers listed and labeled as in compliance with ANSI Z21.13/CSA 4.9 meet the requirements of CSD-1 when additional trim equipment is installed.

ANSI Z21.13/CSA 4.9 is a performance based standard for Gas-Fired Low Pressure Steam and Hot Water Boilers that requires testing and design certification of boiler burner units by an approved testing laboratory. One of the major differences between the two standards is the automatic ignition, maximum safety control timing table. The ignition timing table as shown in Z21.13/CSA 4.9 reflects a wide range of ignition controls and timing sequences. This permits the greatest flexibility in design parameters; however, all boiler burner units must comply with the performance tests to obtain certification. These performance tests include testing under normal and abnormal operating conditions (e.g., delayed ignition, temperature ranges, voltages variations, etc.). As a result, most boiler burner units listed as in compliance with Z21.13/CSA 4.9 generally have shorter ignition timings than the maximum times allowed by Z21.13/CSA 4.9. All boiler burner units listed and labeled under Z21.13/CSA 4.9 must be accompanied with installation instructions referring the installer to CSD-1 where jurisdictions require that the installation conform to CSD-1. The instructional requirements of Z21.13/CSA 4.9 are a mandatory part of the standard.

ASME CSD-1 is a design based standard for Controls and Safety Devices for Automatically Fired Boilers, which includes High Pressure and Low Pressure boilers that are gas, oil, or electrically fired. The automatic ignition, maximum safety control timings are generally shorter as no laboratory certification testing of the boiler unit is required. CSD-1 requires the manufacturers of controls and safety devices to provide detailed instructions for testing, maintenance, and service procedures of controls and safety devices installed on boiler units covered by CSD-1. CSD-1 requires the operation of control systems and safety devices be tested by the installing contractor prior to release to the owner/user. All controls and safety devices covered by CSD-1 must be accepted and listed for the intended service by a nationally recognized testing agency such as, but not limited to, CSA, FM, or UL.

Copyright ASME International
Provided by IHS under license with ASME
No reproduction or networking permitted without license from IHS
Not for Resale

NONMANDATORY APPENDIX B
TYPICAL FUEL TRAINS

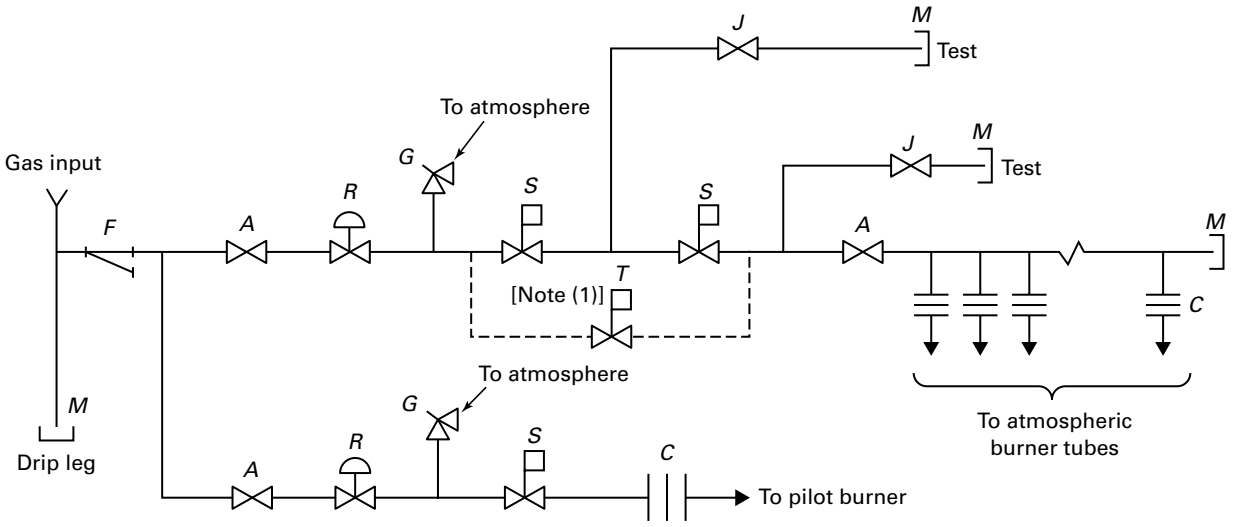

A = manual valve
C = orifice
F = gas filter or strainer (if required)
G = relief valve (if required)
J = leakage test valve
M = pipe cap
R = pressure regulator
S = safety shutoff valve
T = safety shutoff valve with proof of closure

GENERAL NOTE: Since boiler design may vary, ANSI Z21.13/CSA 4.9, Gas-Fired Low Pressure Steam and Hot Water Boilers, does not contain a typical fuel train; however, through laboratory testing procedures, ANSI Z21.13/CSA 4.9 does determine that safe lighting of the boiler will be accomplished; this Standard illustrates a typical fuel train for boilers. The specific fuel train diagram for boilers complying with ANSI Z21.13/CSA 4.9 is supplied in the boiler manufacturer's instructions.

NOTE:

(1) Alternate arrangement — *T* may be used in place of two *S*-type valves.

(04) **Fig. B-1 Typical Atmospheric Gas Fuel Train [Greater Than 400,000 Btu/hr (117 228 W) and Less Than or Equal to 2,500,000 Btu/hr (732 678 W)]**

Copyright ASME International
Provided by IHS under license with ASME
No reproduction or networking permitted without license from IHS
Not for Resale

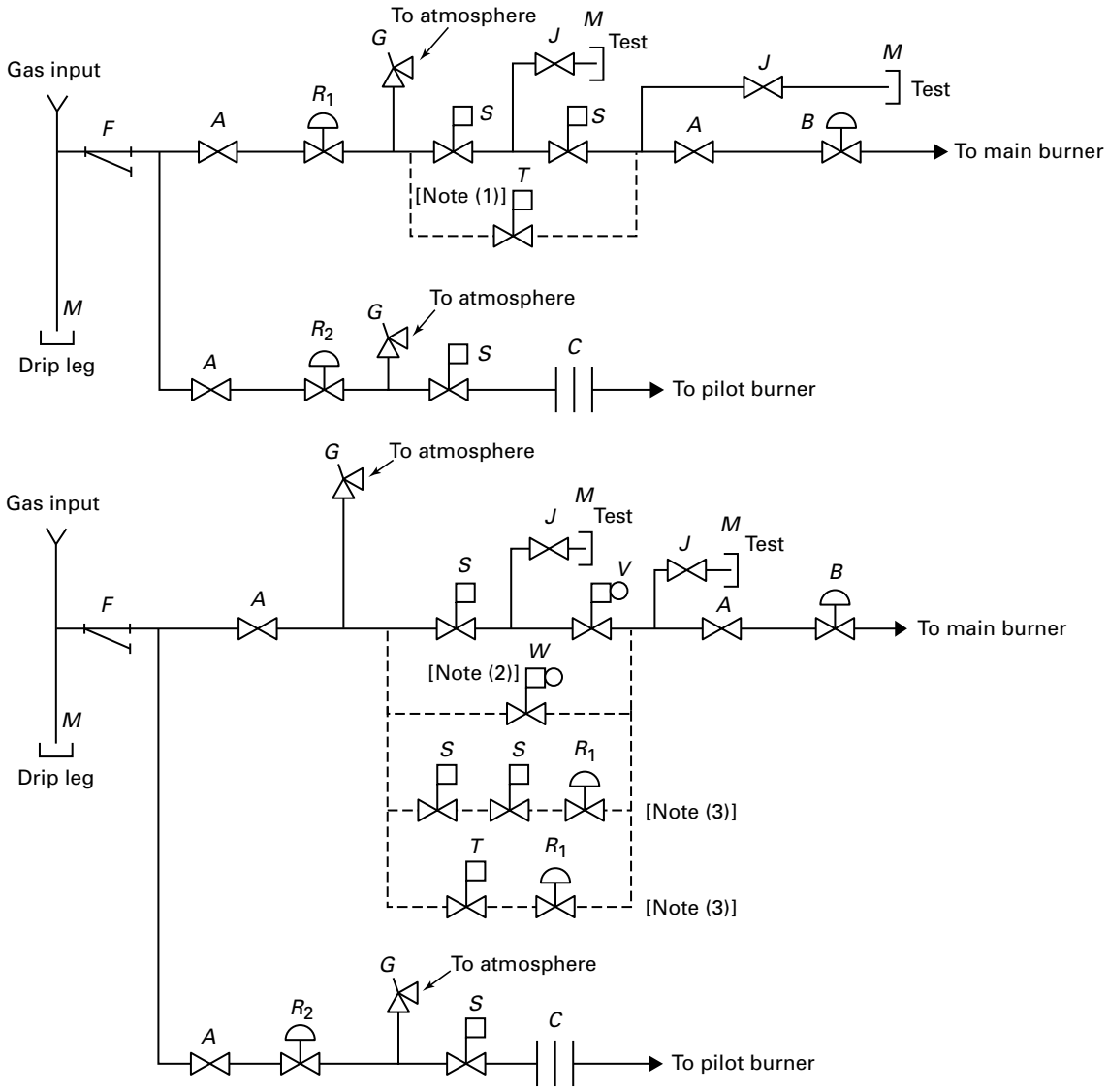

A = manual valve
B = firing rate valve
C = orifice
F = gas filter or strainer (if required)
G = relief valve (if required)
J = leakage test valve
M = pipe cap
R_1 = main gas pressure regulator
R_2 = pilot gas pressure regulator
S = safety shutoff valve
T = safety shutoff valve with proof of closure = main gas pressure regulator/safety
V shutoff combination valve
W = main gas pressure regulator/safety shutoff combination valve with proof of closure

GENERAL NOTE: Since boiler design may vary, ANSI Z21.13/CSA 4.9, Gas-Fired Low Pressure Steam and Hot Water Boilers, does not contain a typical fuel train; however, through laboratory testing procedures, ANSI Z21.13/CSA 4.9 does determine that safe lighting of the boiler will be accomplished; this Standard illustrates a typical fuel train for boilers. The specific fuel train diagram for boilers complying with ANSI Z21.13/CSA 4.9 is supplied in the boiler manufacturer's instructions.

NOTES:

(1) Alternate arrangement — *T* may be used in place of two *S*-type valves.
(2) Alternate arrangement — *W* may be used in place of an *S*-type and a *V*-type valve.
(3) Alternate arrangement — R_1 may be downstream of two *S*-type valves or a *T*-type valve.

Fig. B-2 Typical Gas Fuel Train [Greater Than 400,000 Btu/hr (117 228 W) and Less Than or Equal to 2,500,000 Btu/hr (732 678 W)] (04)

Copyright ASME International
Provided by IHS under license with ASME
No reproduction or networking permitted without license from IHS
Not for Resale

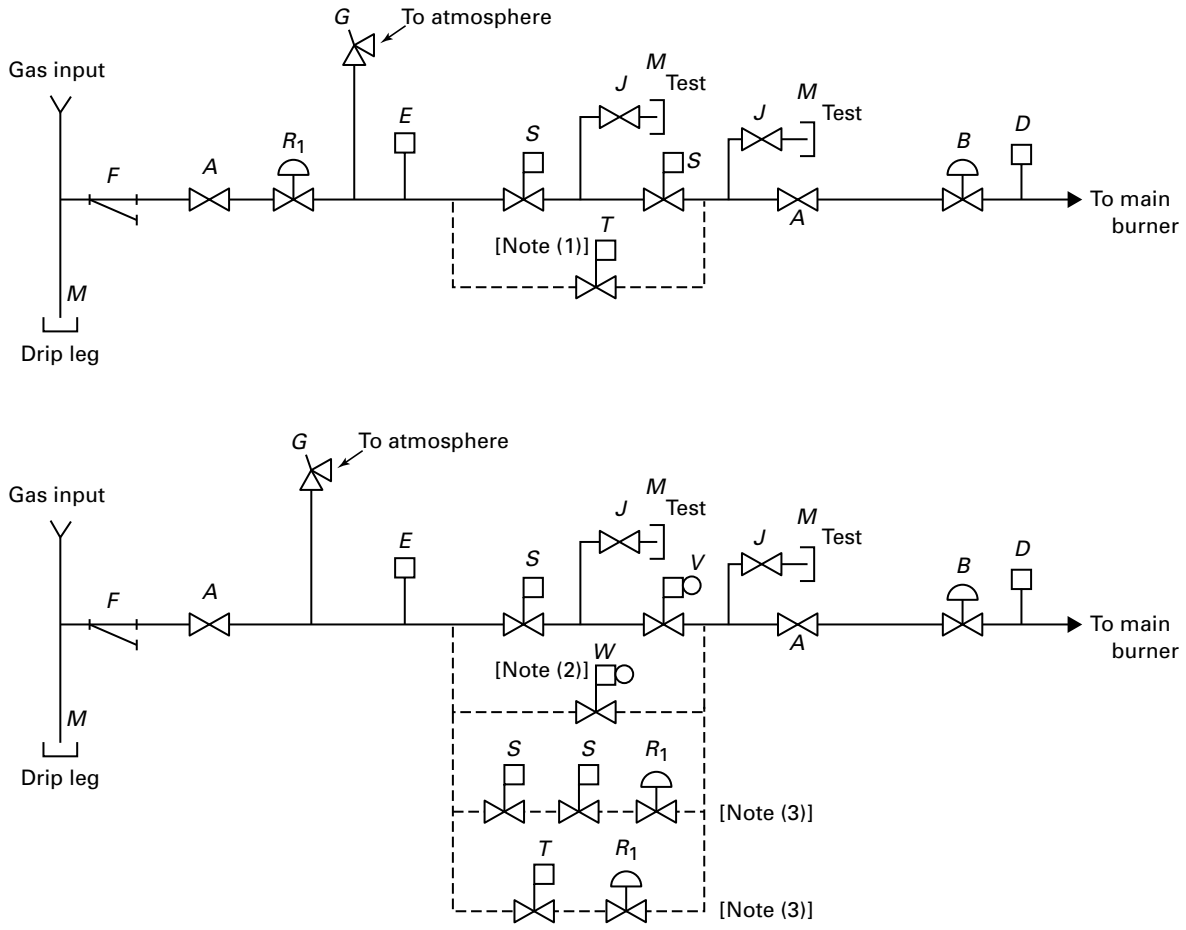

A = manual valve
B = firing rate valve
C = orifice
D = high gas pressure switch
E = low gas pressure switch
F = gas filter or strainer (if required)
G = relief valve (if required)
J = leakage test valve
M = pipe cap
R_1 = main gas pressure regulator
R_2 = pilot gas pressure regulator
S = safety shutoff valve
T = safety shutoff valve with proof of closure
V = main gas pressure regulator/safety shutoff combination valve
W = main gas pressure regulator/safety shutoff combination valve with proof of closure

GENERAL NOTE: Since boiler design may vary, ANSI Z21.13/CSA 4.9, Gas-Fired Low Pressure Steam and Hot Water Boilers, does not contain a typical fuel train; however, through laboratory testing procedures, ANSI Z21.13/CSA 4.9 does determine that safe lighting of the boiler will be accomplished; this Standard illustrates a typical fuel train for boilers. The specific fuel train diagram for boilers complying with ANSI Z21.13/CSA 4.9 is supplied in the boiler manufacturer's instructions.

NOTES:

(1) Alternate arrangement — *T* may be used in place of two *S*-type valves.
(2) Alternate arrangement — *W* may be used in place of an *S*-type and a *V*-type valve.
(3) Alternate arrangement — R_1 may be downstream of two *S*-type valves or a *T*-type valve.

(04)

Fig. B-3 Typical Fuel Train [Greater Than 400,000 Btu/hr (117 228 W) and Less Than or Equal to 2,500,000 Btu/hr (732 678 W)] Direct Ignition System

Copyright ASME International
Provided by IHS under license with ASME
No reproduction or networking permitted without license from IHS
Not for Resale

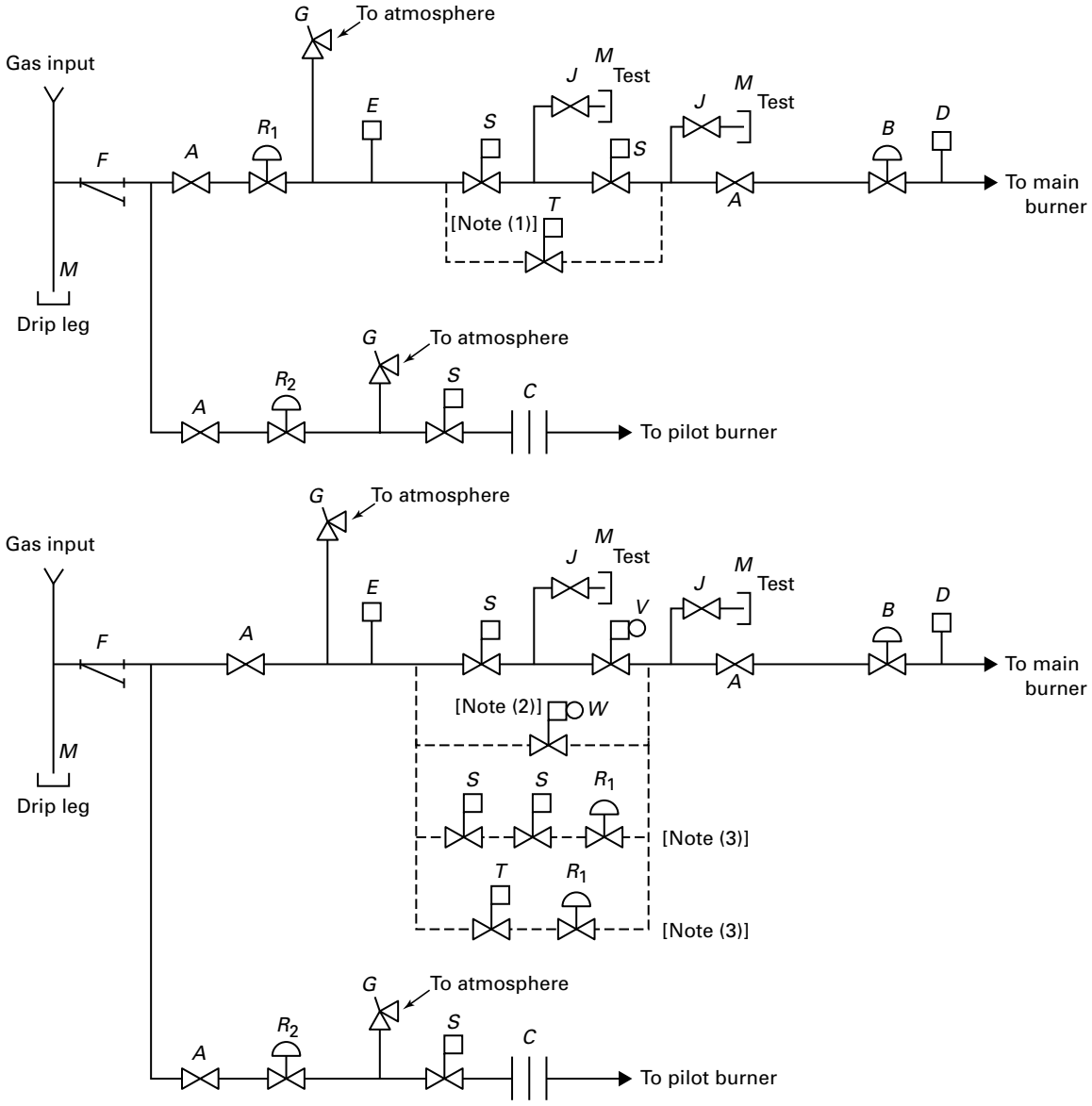

A = manual valve
B = firing rate valve
C = orifice
D = high gas pressure switch
E = low gas pressure switch
F = gas filter or strainer (if required)
G = relief valve (if required)
J = leakage test valve
M = pipe cap
R_1 = main gas pressure regulator
R_2 = pilot gas pressure regulator
S = safety shutoff valve
T = safety shutoff valve with proof of closure
V = main gas pressure regulator/safety shutoff combination valve
W = main gas pressure regulator/safety shutoff combination valve with proof of closure

GENERAL NOTE: Since boiler design may vary, ANSI Z21.13/CSA 4.9, Gas-Fired Low Pressure Steam and Hot Water Boilers, does not contain a typical fuel train; however, through laboratory testing procedures, ANSI Z21.13/CSA 4.9 does determine that safe lighting of the boiler will be accomplished; this Standard illustrates a typical fuel train for boilers. The specific fuel train diagram for boilers complying with ANSI Z21.13/CSA 4.9 is supplied in the boiler manufacturer's instructions.

NOTES:

(1) Alternate arrangement — *T* may be used in place of two *S*-type valves.
(2) Alternate arrangement — *W* may be used in place of an *S*-type and a *V*-type valve.
(3) Alternate arrangement — R_1 may be downstream of two *S*-type valves or a *T*-type valve.

Fig. B-4 Typical Gas Fuel Train [Greater Than 2,500,000 Btu/hr (732 678 W) and Less Than or Equal to 5,000,000 Btu/hr (1 465 356 W)] (04)

Copyright ASME International
Provided by IHS under license with ASME
No reproduction or networking permitted without license from IHS
Not for Resale

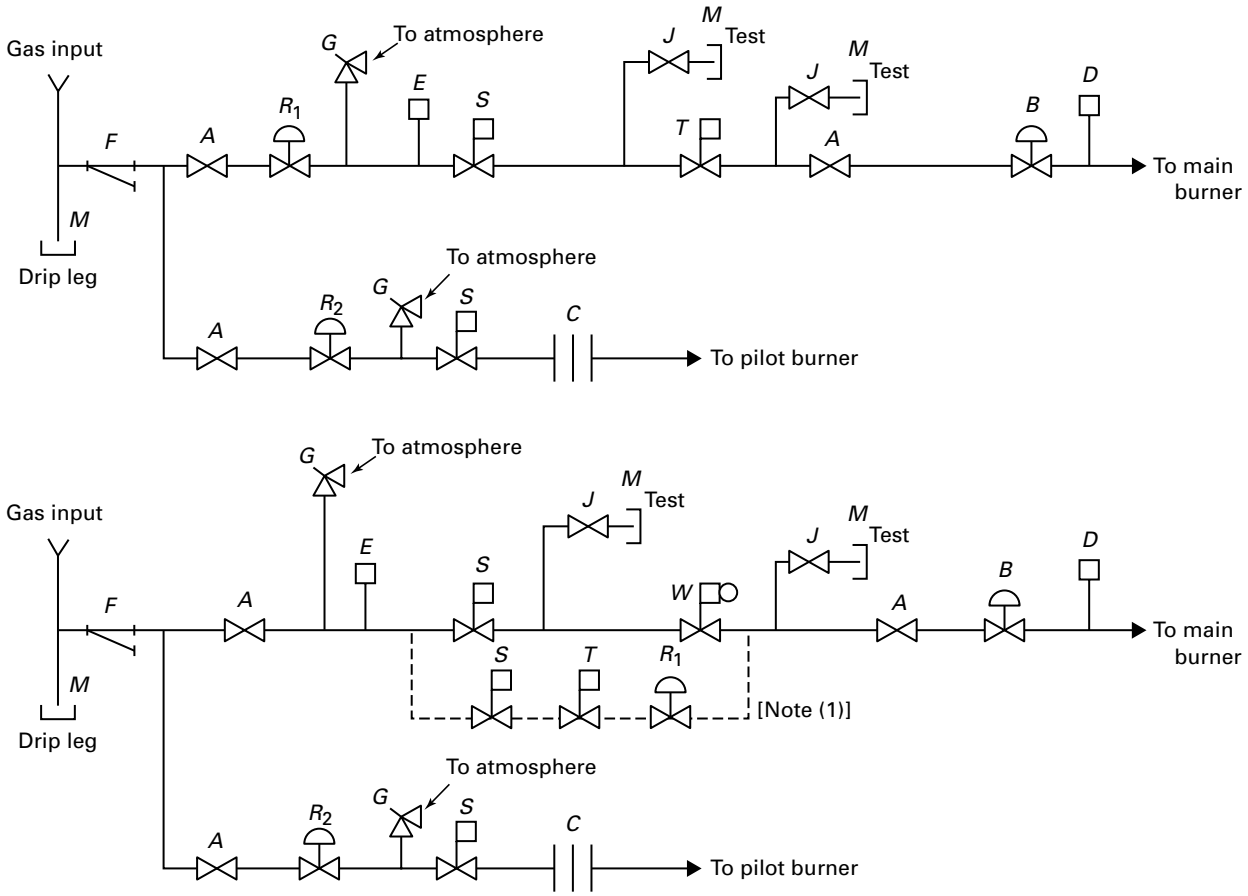

A = manual valve
B = firing rate valve
C = orifice
D = high gas pressure switch
E = low gas pressure switch
F = gas filter or strainer (if required)
G = relief valve (if required)
J = leakage test valve
M = pipe cap
R_1 = main gas pressure regulator
R_2 = pilot gas pressure regulator
S = safety shutoff valve
T = safety shutoff valve with proof of closure
W = main gas pressure regulator/safety shutoff combination valve with proof of closure

GENERAL NOTE: Since boiler design may vary, ANSI Z21.13/CSA 4.9, Gas-Fired Low Pressure Steam and Hot Water Boilers, does not contain a typical fuel train; however, through laboratory testing procedures, ANSI Z21.13/CSA 4.9 does determine that safe lighting of the boiler will be accomplished; this Standard illustrates a typical fuel train for boilers. The specific fuel train diagram for boilers complying with ANSI Z21.13/CSA 4.9 is supplied in the boiler manufacturer's instructions.

NOTE:
(1) Alternate arrangement — R_1 may be downstream of an *S* type and a *T* type valve.

(04)

Fig. B-5 Typical Gas Fuel Train [Greater Than 5,000,000 Btu/hr (1 465 356 W) and Less Than or Equal to 12,500,000 Btu/hr (3 663 389 W)]

Copyright ASME International
Provided by IHS under license with ASME
No reproduction or networking permitted without license from IHS
Not for Resale

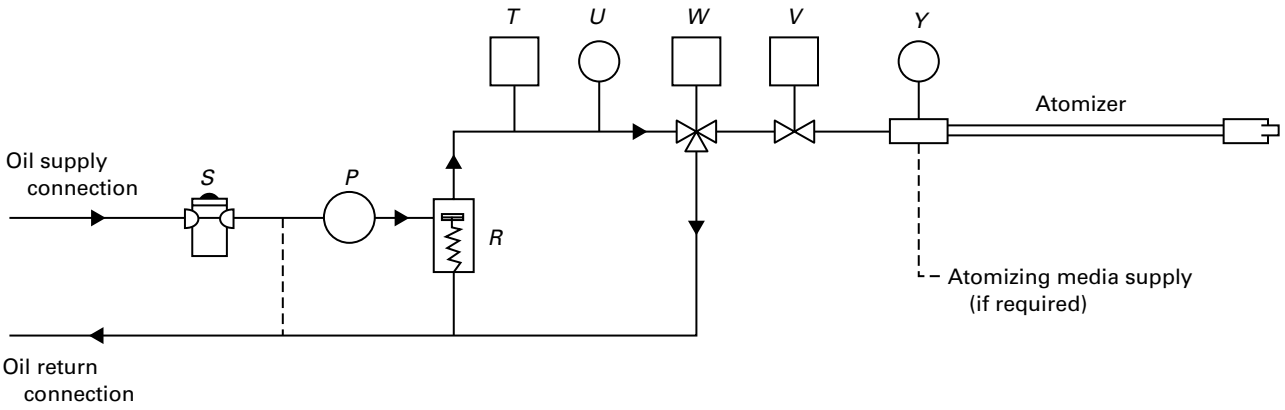

P = fuel pump
R = shutoff valve and/or pressure relief valve
S = fuel strainer
T = oil temperature interlock switch (if required)
U = oil pressure interlock switch (if required)
V = safety shutoff valve
W = safety shutoff valve (may be 3-way for recirculation)
Y = atomizing media supply pressure interlock switch (if required)

Fig. B-6 Typical Oil Fuel Train

Copyright ASME International
Provided by IHS under license with ASME
No reproduction or networking permitted without license from IHS
Not for Resale

(04)

NONMANDATORY APPENDIX C
MANUFACTURER'S/INSTALLING CONTRACTOR'S REPORT FOR ASME CSD-1

Certification and Reporting (CG-500) for Controls and Safety Devices

(This Form is a guideline and is not part of ASME CSD-1–2004.)

Unit Manufacturer

Name _____

Address _____ Zip _____

Telephone _____ Fax _____

Unit Identification (Boiler)

Manufacturer's Model # _____ Year Built _____

ASME # _____ Nat. Bd. # _____

UL # _____ CSA # _____

Jurisdiction _____

Steam

Max. W.P. _____ psig

Min. Safety Valve Cap. _____ PPH

Hot Water

Max. W.P. _____ psig

Max. Temp. _____ °F

Min. Safety Relief Valve Cap. _____ PPH or Btu

Boiler Unit Description (Type) _____

If Modular (No. of Modules) _____

Boiler Unit Capacity (Output) _____

Burner

Manufacturer _____ Model _____

UL or CSA # _____ Serial # _____

Fuels (as Shipped) _____

	Indicate Units (Where not applicable, indicate "N/A")
Gas Manifold Pressure	
Oil Nozzle/Delivery Pressure (at max input)	
High Gas Pressure Switch Setting	
Low Oil Pressure Switch Setting	

Installation Location (if Known)

Customer Name _____

Address _____

City _____ State _____ Zip _____

Telephone _____ Fax _____

--`,,```,,,,````-`-`,,`,,`,`,,`---

Copyright ASME International
Provided by IHS under license with ASME
No reproduction or networking permitted without license from IHS

Not for Resale

Certification and Reporting (CG-500) for Controls and Safety Devices (Cont'd)

(This Form is a guideline and is not part of ASME CSD-1–2004.)

Control/Device	Manufacturer	Model #	Operational Test Performed, Date
Operating Controls			
Low-Water Fuel Cutoff CW-120(a), CW-140			
Forced Circulation CW-210(a)			
Steam Pressure CW-310(b)			
Water Temperature CW-410(b)			
Safety Controls			
Low-Water Fuel Cutoff CW-120(a), CW-120(b) CW-130, CW-140			
Forced Circulation CW-210(b)			
High Steam Pressure Limit CW-310(c)			
High Water Temperature Limit CW-410(b)			
Fuel Safety Shutoff Valve, Main CF-180(b)(2), CF-180(b)(3)			
Pilot Safety Shutoff Valve CF-180(c)			
Atomizing Medium Switch CF-450(b)			
Combustion Air Switch CF-220			
High Gas Pressure CF-162			
Low Gas Pressure CF-162			
Low Oil Pressure CF-450(a)			
High Oil Temperature CF-450(c)			
Low Oil Temperature CF-450(d)			
Purge Air Flow CF-210			
Flame Safeguard (Primary) CF-310, CF-320			
Flame Detector CF-310, CF-320			
Low Fire Start			
Low-Fire Start Switch CF-610			
Safety or Safety Relief Valve(s) CW-510, CW-520			

Copyright ASME International
Provided by IHS under license with ASME
No reproduction or networking permitted without license from IHS Not for Resale

Certification and Reporting (CG-500) for Controls and Safety Devices (Cont'd)

(This Form is a guideline and is not part of ASME CSD-1–2004.)

Manufacturer _____ **Operational Test Performed, Date** _____ / _____ / _____

Model _____

Size _____

Capacity _____ PPH/Btu/hr

Representing Equipment Manufacturer, Name _____

Signature _____ Date _____

Representing Installing Contractor, Name _____

Signature _____ Date _____

Copyright ASME International
Provided by IHS under license with ASME
No reproduction or networking permitted without license from IHS Not for Resale

NONMANDATORY APPENDIX D
RECOMMENDED PREVENTIVE MAINTENANCE SCHEDULE

(Operation and maintenance instructions in this safety standard are intended for general applications. For specific operating and maintenance instructions, consult the equipment manufacturer.)

D-1 DAILY

(a) Check gages, monitors, and indicators.
(b) Check instrument and equipment settings.
(c) For high-pressure boilers, test low-water fuel cutoff device and alarm.
(d) Check burner flame.

D-2 WEEKLY

(a) For low-pressure boilers, test low-water fuel cutoff device and alarm.
(b) Check igniter.
(c) Check flame signal strength.
(d) Check flame failure detection system.
(e) Check firing rate control.
(f) Make aural and visual check of pilot and main fuel valves.

D-3 MONTHLY

(a) Check flue, vent, stack, or outlet dampers.
(b) Test low draft, fan air pressure and damper position interlocks.
(c) Check low fire start interlock.
(d) Test high and low oil pressure and temperature interlocks.
(e) Test high and low gas pressure interlocks.

D-4 SEMI-ANNUALLY

(a) Recalibrate all indicating and recording gages.
(b) For steam boilers, perform a slow drain test of the low-water fuel cutoff device.
(c) Check flame failure detection system components.
(d) Check firing rate control.
(e) Check piping and wiring of all interlocks and shutoff valves.
(f) Inspect burner components.

D-5 ANNUALLY

(a) Flame failure detection system, pilot turndown test.
(b) Flame failure detection system, test for hot refractory hold in.
(c) Check dual fuel change over control.
(d) Test high limit and operating temperature or steam pressure controls.
(e) Replace vacuum tubes, scanners or flame rods in accordance with manufacturer's instructions.
(f) Conduct a combustion test.
(g) Check all coils and diaphragms; test other operating parts of all safety shutoff and control valves.
(h) Test fuel valve interlock switch in accordance with manufacturer's instructions.
(i) Perform leakage test on pilot and main gas and/or oil fuel valves.
(j) Test purge air switch in accordance with manufacturer's instructions.
(k) Test air/steam interlock in accordance with manufacturer's instructions.
(l) Test burner position interlock in accordance with manufacturer's instructions.
(m) Test rotary cup interlock in accordance with manufacturer's instructions.
(n) Test low fire start interlock in accordance with manufacturer's instructions.

D-6 AS REQUIRED

(a) Recondition or replace low water fuel cutoff device.
(b) For oil-fired burners, clean atomizers and oil strainers.
(c) For gas-fired burners, check drip leg and gas strainers.
(d) Flame failure detection system, pilot turndown test.
(e) Flame failure detection system, test for hot refractory hold in.
(f) Test safety/safety relief valves in accordance with ASME Boiler and Pressure Vessel Code Sections VI and VII.

Copyright ASME International
Provided by IHS under license with ASME
No reproduction or networking permitted without license from IHS
Not for Resale

Copyright ASME International
Provided by IHS under license with ASME
No reproduction or networking permitted without license from IHS

Table D-1 Periodic Testing Recommended Checklist (See Manufacturer's Instructions)

Frequency [Note (1)]								Accomplished By:	
D	W	M	S/A	A	A/R	Component/Item	Recommended Test	Boiler Operator	Service Technician
X						Gages, monitors, and indicators	Makes visual inspection and record readings in boiler log.	X	
			X			Gages, monitors, and indicators	Recalibrate all indicating and recording gages.		X
X						Instrument and equipment settings	Make visual check against factory recommended specifications.	X	
X						Low water fuel cutoff device (high pressure boilers)	Test low water fuel cutoff device according to manufacturer's instructions.	X	
	X					Low water fuel cutoff device (low pressure boilers)	Test low water fuel cutoff device according to manufacturer's instructions.	X	
			X			Low water fuel cutoff device (steam boilers)	For steam boilers, perform a slow drain test in accordance with ASME Boiler and Pressure Vessel Code, Section VI.		X
					X	Low water fuel cutoff device	Recondition or replace low water fuel cutoff device.		X
				X		Operating and/or limit controls	Test high limit and operating temperature or steam pressure controls.		X
					X	Safety/safety relief valves	Test safety/safety relief valves in accordance with ASME Boiler and Pressure Vessel Code, Sections VI and VII.		X
		X				Flue, vent, stack, or outlet dampers	Make visual inspection of linkage, check for proper operation.	X	
X						Burner flame	Make visual inspection of burner flame. [Note (2)]	X	
	X					Igniter	Make visual inspection, check flame signal strength if meter-fitted.	X	
	X					Flame signal strength	If flame signal meter is installed, read and log; for both pilot and main flames, notify service organization if readings are very high, very low, or fluctuating; refer to manufacturer's instructions.	X	
	X					Flame failure detection system	Close manual fuel supply for (1) pilot, (2) main fuel cock, and/or valve(s); check safety shutdown timing; log.	X	

Not for Resale

--`,,```,,,,````-`-`,,`,,`,`,,`---

Table D-1 Periodic Testing Recommended Checklist (Cont'd)

Frequency [Note (1)]						Component/Item	Recommended Test	Accomplished By:	
D	W	M	S/A	A	A/R			Boiler Operator	Service Technician
			X			Flame failure detection system	Check flame failure detection system components, such as vacuum tubes, amplifier, and relays.		X
				X		Flame failure detection system	Replace vacuum tubes, scanners, or flame rods in accordance with manufacturer's instructions.		X
				X	X	Flame failure detection system (pilot turndown test)	Conduct pilot turndown test according to manufacturer's instructions. This test is required annually and after any adjustments to flame scanner mount or pilot burner.		X
				X	X	Flame failure detection system (hot refractory hold in test)	Test for hot refractory hold in. This test is required annually and after any adjustments to the flame scanner mount or pilot burner.		X
	X					Firing rate control	Check firing rate control and verify factory settings; refer to manufacturer's instructions.	X	
			X			Firing rate control	Check firing rate control and verify factory settings; refer to manufacturer's instructions.		X
				X		Firing rate control	Conduct a combustion test, verify settings are in accordance with manufacturer's instructions.		X
	X					Pilot and/or main fuel valves	Open limit switch and make aural and visual check; check valve position indicators and check fuel meters if so fitted.	X	
				X		Pilot and/or main fuel valves	Check all coils and diaphragms; test other operating parts of all safety shutoff and control valves.		X
				X		Pilot and/or main fuel valves	Test fuel valve interlock switch in accordance with manufacturer's instructions.		X
				X		Pilot and/or main fuel valves	Perform leakage test on pilot and main gas and/or oil fuel valves, in accordance with manufacturer's instructions.		X
		X				Low draft, fan, air pressure, and damper position interlocks	Test low draft, fan, air pressure, and damper position interlocks according to manufacturer's instructions.	X	
				X		Low draft, fan, air pressure, and damper position interlocks	Test purge switch in accordance with manufacturer's instructions.		X

Copyright ASME International
Provided by IHS under license with ASME
No reproduction or networking permitted without license from IHS
Not for Resale

Copyright ASME International
Provided by IHS under license with ASME
No reproduction or networking permitted without license from IHS

Table D-1 Periodic Testing Recommended Checklist (Cont'd)

Frequency [Note (1)]								Accomplished By:	
D	W	M	S/A	A	A/R	Component/Item	Recommended Test	Boiler Operator	Service Technician
		X				Low fire start interlock	Check low fire start interlock according to manufacturer's instructions.	X	
				X		Low fire start interlock	Test low fire start interlock in accordance with manufacturer's instructions.		X
		X				Oil pressure and temperature interlocks	Test high and low oil pressure and temperature interlocks according to manufacturer's instructions.	X	
		X				Gas pressure interlocks	Test high and low gas pressure interlocks according to manufacturer's instructions.	X	
			X			Interlocks and valves	Check piping and wiring of all interlocks and shut off valves.		X
				X		Atomizing air/steam interlock	Test air/steam interlock in accordance with manufacturer's instructions.		X
				X		Burner position interlock	Test burner position interlock in accordance with manufacturer's instructions.		X
				X		Rotary cup burner interlock	Test rotary cup interlock in accordance with manufacturer's instructions.		X
			X			Burner components	Inspect burner components according to manufacturer's instructions.		X
				X	X	Burner components	Check dual fuel change over control. If automatically controlled by gas utility, perform test under the supervision of gas utility.		X
					X	Burner components	For oil fired burners, clean atomizers and oil strainers.		X
					X	Burner components	For gas fired burners, check drip leg and gas strainer.		X

NOTES:
(1) Daily (D), Weekly (W), Monthly (M), Semi-Annually (S/A), Annually (A), As-Required (A/R).
(2) Caution should be used when viewing burner flame. Personal protective equipment such as filtered eyeware may be necessary.

Not for Resale

NONMANDATORY APPENDIX E
REFERENCES TO OTHER CODES AND STANDARDS

(04)

The following is a list of standards and specifications referenced in this Standard, showing the year of approval.

ANSI Z21.13-2000/CSA 4.9-2000, Gas-Fired Low Pressure Steam and Hot Water Boilers[1]
ANSI Z21.17-1998/CSA 2.7-M98, Domestic Gas Conversion Burners[1]
ANSI Z21.18-2000/CSA 6.3-2000, Gas Appliance Pressure Regulators[1]
ANSI Z21.21-2000/CSA 6.5-2000, Automatic Valves for Gas Appliances[1]
ANSI Z21.22-1998 (R2003)/CSA 4.4-M99, Relief Valves for Hot Water Supply Systems[1]
ANSI Z21.56-2001/CSA 4.7-2001, Gas-Fired Pool Heaters[1]
ANSI Z21.78-2000/CSA 6.20-2000, Combination Gas Controls for Gas Appliances[1]
Publisher: CSA International, 8501 East Pleasant Valley Road, Cleveland, OH 44131

2001 ASME Boiler and Pressure Vessel Code
Publisher: The American Society of Mechanical Engineers (ASME International), Three Park Avenue, New York, NY 10016-5990; Order Department: 22 Law Drive, Box 2300, Fairfield, NJ 07007-2300

ASTM D 396-02, Standard Specification for Fuel Oils
Publisher: American Society for Testing and Materials (ASTM), 100 Bar Harbor Drive, West Conshohocken, PA 19428-2959

NFPA 31-2001, Standard for the Installation of Oil-Burning Equipment
NFPA 54/ANSI Z223.1-2002, National Fuel Gas Code[1]
NFPA 58-2001, Liquefied Petroleum Gas Code
NFPA 70-2002, National Electrical Code
NFPA 85-2001, Boiler And Combustion Systems Hazards Code
Publisher: National Fire Protection Association (NFPA), 1 Batterymarch Park, Quincy, MA 02269-9101

UL 144-1999, Standard for LP-Gas Regulators
UL 296-2003, Standard for Oil Burners
UL 343-1997, Standard for Pumps for Oil-Burning Appliances
UL 353-1994, Standard for Limit Controls
UL 429-1999, Standard for Electrically Operated Valves
UL 506-2000, Standard for Specialty Transformers
UL 726-1995, Standard for Oil-Fired Boiler Assemblies
UL 795-1999, Standard for Commercial-Industrial Gas Heating Equipment
UL 814-2004, Gas-Tube-Sign Cable
UL 834-2004, Standard for Heating, Water Supply, and Power Boilers – Electric
Publisher: Underwriters Laboratories, Inc. (UL), 333 Pfingsten Road, Northbrook, IL 60062-2096

[1] May also be obtained from the American National Standards Institute, Inc., 25 West 43rd Street, New York, NY 10036.

Copyright ASME International
Provided by IHS under license with ASME
No reproduction or networking permitted without license from IHS
Not for Resale

INDEX

Annunciator systems, CG-250
Atmospheric vent, gas, CF-190
Automatic ignition devices, CF-320, CF-520
Automatic ignition system, CE-140

Bleed, gas, CF-190
Bonding and grounding, CE-160
Burner assemblies, CF-110, CF-410, CF-710
Burner, gas-fired, CF-110
Burner, oil-fired, CF-410

Certification and reporting, CG-510
Cleaning, CG-410
Combination units, gas- and oil-fired, CF-710
Combustion air, CG-260, CF-480
Combustion air control, CF-220, CF-480
Components, CG-310

Drip legs, CF-140

Electrical requirements, CE-100
Electrically heated boilers, CF-810, CF-930
Exclusions, CG-130

Filter, gas, CF-130
Filter, oil, CF-430
Flame failure, CF-330, CF-530
Forced circulation boilers
  flow sensing device, CW-210
  temperature sensing device, CW-210
Fuel train, CF-120, CF-420, Appendix B

Gas- and oil-fired combination units, CF-700
General provisions, CG-210
Guarding, CG-240

Hot-water supply boilers, CW-520

Ignition devices (*see* automatic ignition devices)
Ignition system, CE-140
Installations, CG-220, CG-320

Lockout, operation, CG-610
Low fire start, gas/oil, CF-610
Low water fuel cutoff device (*see* water level control devices)

Maintenance, CG-430, CM-100
Material requirements, CG-300
Modular boilers, CW-600, CF-900
Motors, CE-130

Observation ports, CG-230
Operational testing, CG-440
Overcurrent protection, CE-120
Overpressure protection, gas, CF-161

Periodic testing and maintenance, CM-100, CM-130
Periodic testing checklist, Table D-1
Preignition purging, CF-210, CF-470
Pressure controls, steam, CW-310, CW-620
Pressure regulator, gas, CF-160
Pressure switches, fuel, CF-162, CF-450
Preventive maintenance schedule, Appendix D
Primary safety control, CF-310, CF-510
Purging, CF-200, CF-470

Relief line, gas, CF-190

Scope, CG-110
Service limitations, CG-120
Strainer, CF-130, CF-430

Temperature controls, hot-water, CW-410, CW-640
Temperature switch, oil, CF-450
Testing, CG-420, CM-100

Valve, control, CF-170
Valve, gas shutoff, manually operated, CF-150
Valve, oil relief, CF-440
Valve, safety and safety relief, CW-500
Valve, safety shutoff, CF-180, CF-460
Vent, gas, CF-190
Vent limiter, CF-160, CF-190

Water feeding device, CW-100
Water level control devices, hot-water, CW-110, CW-130, CW-140, CW-150, CW-630
Water level control devices, steam, CW-110, CW-120, CW-140, CW-150, CW-610
Wiring, CE-150

Copyright ASME International
Provided by IHS under license with ASME
No reproduction or networking permitted without license from IHS
Not for Resale

ASME CSD-1 INTERPRETATIONS

Replies to Technical Inquiries
October 2001 — April 2003

FOREWORD

This publication includes written replies issued in the year indicated by the Secretary, speaking for the ASME CSDAFB Committee, to inquiries concerning interpretations of technical aspects of ASME CSD-1.

These replies are taken verbatim from the original replies except for a few typographical corrections and some minor editorial corrections made for the purpose of improved clarity. In some few instances, a review of the interpretation may reveal a need for corrections of a technical nature; in these cases a corrected interpretation will immediately follow the original reply.

These interpretations were prepared in accordance with the accredited ASME procedures. ASME procedures provide for reconsideration of these interpretations when or if additional information is available which the inquirer believes might affect the interpretation. Further, persons aggrieved by this interpretation may appeal to the cognizant ASME committee or subcommittee. ASME does not "approve," "certify," "rate," or "endorse" any item, construction, proprietary device, or activity.

Copyright ASME International
Provided by IHS under license with ASME
No reproduction or networking permitted without license from IHS
Not for Resale

Interpretation: 01-02

Subject: CSD-1-1998 up to and including CSD-1a–1999, CW-140(c)

Date Issued: October 17, 2001

Question: For a boiler with a maximum allowable temperature of 250°F, does CW-410(c) allow for use of a limit control that conforms to UL 353, has a temperature range to 270°F, and a maximum fixed stop that limits the control setting to 240°F?

Reply: Yes.

Interpretation: 02-01

Subject: CSD-1-1998, up to and including CSD-1a–1999, CW-210

Date Issued: May 9, 2002

Question: Does a single, pressure switch located between the main gas regulator and the safety shutoff valves in the position shown for the low gas pressure switch (*E*) in Figs. B-3 and B-4, that is capable of supervising both high and low gas pressure and providing safety shutdown with a single interlock switch comply with the requirements of CSD-1, para. CF-162?

Reply: Yes.

Interpretation: 02-02

Subject: CSD-1-1998 up to and including CSD-1a–1999 and CSD-1b–2001, CF-150(b)

Date Issued: May 9, 2002

Question: Is it acceptable to use automatic pilot valve tapping provided on a combustion gas valve as the pilot gas supply where the combination valve also houses the manually operated gas shutoff which is upstream of the automatic pilot gas valve, provided that all other CSD-1 requirements are satisfied and the boiler is approved to ANSI Z21.13?

Reply: No.

Interpretation: 02-03

Subject: CSD-1-1998 up to and including CSD-1a-1999 and CSD-1b-2002, CF-300, Tables CF-1 through CF-5

Date Issued: May 9, 2002

Question: Do Tables CF-1 through CF-5 and CF-300 of CSD-1 specifically acknowledge or address the pulse combination process?

Reply: No.

Copyright ASME International
Provided by IHS under license with ASME
No reproduction or networking permitted without license from IHS Not for Resale

Interpretation: 02-04

Subject: CSD-1-2002, CG-110

Date Issued: October 15, 2002

Question: In an automatically operated hot water heating boiler directly fired by means of a single dual fuel burner; wherein the primary fuel consists of gas produced by the digestion of sewage treatment sludge, a gaseous fuel not listed in the definitions of CSD-1, and that has not been evaluated; wherein the secondary fuel consists of gas as defined in the definitions of CSD-1 as gas one of the following fuels: natural gas, liquefied petroleum (LP) gas, LP-air mixture, manufactured gas or mixed gas; wherein the primary fuel and the secondary fuel are either switched from one to the other or are blended together; is the unit within the scope of ASME CSD-1?

Reply: Yes. See CG-110.

Interpretation: 03-01

Subject: CSD-1-2002, CF-150(d)

Date Issued: April 10, 2003

Question (1): Is the downstream manual shutoff valve referred to in CF-150(d) required for the purpose of facilitating valve seat leak testing of the safety shutoff valves?

Reply (1): Yes.

Question (2): If a means to leak test the safety shutoff valves (independently) is provided by the valve manufacturer such that the downstream manual shutoff valve is not required or used for leak testing, can the manual shutoff valve be eliminated?

Reply (2): No.

--`,,```,,,,````-`-`,,`,,`,`,,`---

Copyright ASME International
Provided by IHS under license with ASME
No reproduction or networking permitted without license from IHS Not for Resale

Copyright ASME International
Provided by IHS under license with ASME
No reproduction or networking permitted without license from IHS
Not for Resale

NUMERICAL AND SUBJECT INDEX

Inquiry No.	Date	Subject	Edition	Reference	Vol.
88-1	6/28/88	Gas train	1982	CF-180, Fig. CF-1	. . .
88-2	4/5/89	Periodic testing	All	CM1	1
89-1	9/20/89	Modular boilers	1988	CW-120, CR	2
89-2	9/20/89	Safety shutdown	1984	CF-220, Table CF-1	2
89-3	9/20/89	Safety shutdown	1984	CW-120, CR	2
89-4	4/5/90	Safety shutdown	1988	CW-210, CW-110(e)	2
89-5	4/5/90	Testing	1988	CG-500, CG-420	2
90-1	2/12/90	Effective date	Any	Issue date, Appendix A	2
90-2	4/5/90	Rebuilt controls	1988	CF-310	2
90-3	4/5/90	Relief valve	1988	CW-520, Appendix A	2
90-4	10/12/90	Lockout	1988, 1989	CF-330, CF-530, Definitions	3
90-5	10/12/90	Vents	1988, 1989	CF-190	3
91-1	4/15/91	Flame failure	1988	Table CF-2	3
91-2	4/15/91	Combustion air prov.	1988, 1989, 1990	Tables CF-1, CF-2, CF-3	3
91-3	4/15/91	Hot water low water cutoff	1988, 1989, 1990	CW-130, CR-210	3
91-4	4/15/91	Safety shutoff valves	1982, 1984	CF-180, Table CF-1	3
91-5	4/15/91	Safety shutoff valves	1988, 1989, 1990	CF-180	3
91-7	11/15/91	Pump motors	1988, 1989, 1990	CE-130	4
91-8	11/16/91	Water level controls	1988, 1989, 1990	CW-130	4
92-2	5/15/92	Scope, definitions	All		4
93-1	11/9/93	Limit controls	1988	CW-210, CF-210	4
93-2	11/9/93	Rebuilt controls	All	See Inquiry 90-2	4
94-1	2/14/94	Purge	1992, 1993	CF-210	4
94-3	5/25/94	Pressure controls	1992, 1993	CW-310(f), CW-310(g)	5
94-4	5/17/94	Low water cutoff	1992, 1993	CW-310(c)	6
94-4a	5/31/94	Z21.13	1992, 1993	CSD-1	5
94-5	5/31/94	Purge damper	1992, 1993	CF-200, Tables CF-1, CF-2	5
94-6	5/31/94	Burners	1992, 1993	CF-160	5
94-8	9/2/94	Low water cutoff	1992, 1993	CW-120(b)(2)	5
94-9	12/1/94	Pressure controls	1992, 1993	CW-310	5
95-1	2/10/94	Electric boiler	1992, 1993, 1994	CR-110(f)	5
95-2	11/22/95	Lockout	1992, 1993	Definitions	6
95-4	11/22/95	Burners	1992, 1993, 1994	CF-110(a)	6
96-1a	5/16/96	Flow/temperature sensor	1992, 1994	CW-210	7
96-1b	5/16/96	Exclusions	1992, 1994	CG-130	7
96-2a	5/16/96	Exclusions	1995	CG-130	7
96-2b	5/16/96	Controls listing	1995	CW-310, CW-110, CW-410	7
96-03	5/16/96	Lockout	1995	CF-310, CF-510, CF-710	7
96-04	11/19/96	Leak test valves	1995	CF-150(d)	8
96-04R	10/29/97	Leak test valves	1995	CF-150(d)	8
96-05	11/19/96	Exclusions	1995	CG-130	8
97-01	5/23/97	Pressure controls	1995, 1996	CW-130	8
97-02	5/23/97	Electrical	1995, 1996	CE-110(a)	8
97-03	10/29/97	Water level controls	1995	CW-140a	9
97-04	11/25/97	Water level controls	1995	CW-140(c)	9
97-05	10/15/97	Manifolding pressure ctrls.	1995, 1996a	CW-310(h)	9
97-06	10/29/97	Atmospheric gas boiler	1995, 1996a, 1996b	CG-100(a)(1)	9

Copyright ASME International
Provided by IHS under license with ASME
No reproduction or networking permitted without license from IHS
Not for Resale

Inquiry No.	Date	Subject	Edition	Reference	Vol.
97-07	10/29/97	Atmospheric vents	1995, 1996a, 1996b	CF-190	9
97-08	10/29/97	Atmospheric type burner	1995, 1996a, 1996b	Definitions	9
97-09	10/29/97	Automatic ignition devices	1995	CF-320	9
97-10	10/29/97	Safety shutoff valves	1995	CF-180	9
97-11	1/6/98	Low water cutoff	1995	CW-120, CW-140	9
98-01	3/9/98	Gas shutoff valve	1995	CF-150(a)	9
98-02	6/10/98	Water level controls	1995, 1996a, 1996b	CW-140(d)	9
98-03	6/10/98	Water level controls	1995, 1996a, 1996b	CW-140(d)	9
98-04	8/10/98	Gas shutoff valve	1995, 1996a, 1996b	CF-150(a)	9
98-05	9/15/98	Atmospheric vents	1995	CF-190	9
98-06	9/15/98	Gas pressure regulator	1995, 1996a, 1996b	CF-160	9
98-07	12/31/98	Automatic ignition device	1998	CF-320	9
98-08	11/29/99	Pressure controls for steam	1998	CW-310(j)	10
98-09	3/31/99	Automatic ignition device	1998	CF-320	9
98-10	6/16/99	Operating and safety controls	1995, 1996	CW-150	10
98-11	5/21/99	Testing of controls	1998	CM-110, CM-120, CM-130, Table CM-1	10
99-01	6/16/99	Combustion air	1998	CG-260	10
99-02	6/16/99	Manually operated gas shutoff valve	1998	CF-150(b)	10
99-03	6/16/99	Exclusions	1995–1998	CG-130	10
99-04	11/29/99	Low water cutoff	1998	CW-130(d)	10
99-05	9/17/99	Gas pressure switch	1998	CF-162	10
99-07	11/29/99	Gas fired boiler units	1998	CF-100(b)	10
99-08	7/18/00	Burners	1998	CF-320(b), CF-310, CF-330	10
00-01A	7/10/00	Vents	1998	CF-190(e)	10
00-01B	7/18/00	Testing	1998	Table CM-1	10
00-02	7/18/00	Primary safety control	1998	CF-310, CF-510	10
00-03	7/18/00	Fuel pressure supervision	1998	Table CF-1	10
00-04	7/18/00	Low water cutoff	1998	CW-140	10
00-07	12/14/00	Testing of flow switches	1998	CW-210	10
00-08	12/14/00	Combustion air proving	1998	CF-220, Table CF-1	10
01-01	6/15/01	Pressure controls	1998, 1999a	CW-310(a), CW-410(a)	11
01-02	10/17/01	Temperature controls	1998, 1999a	CW-410(c)	12
02-01	5/9/02	Gas pressure switches	1998, 1999a	CW-210	12
02-02	5/9/02	Pilot gas supply	1998, 1999a, 2001b	CF-150(b)	12
02-03	5/9/02	Pulse combustion process	1998, 1999a, 2001b	CF-300, Tables CF-1 through CF-5	12
02-04	10/15/02	Fuel	2002	CG-110	12
03-01	4/10/03	Downstream manual shutoff valve	2002	CF-150(d)	12

This list of interpretations refers to the following CSD-1 editions:

First edition	Issued April 29, 1977	Fifth edition	Issued June 30, 1995
Second edition	Issued December 31, 1982	1a addenda	Issued July 31, 1996
1a addenda	Issued November 15, 1984	1b addenda	Issued December 20, 1996
Third edition	Issued February 15, 1989	Sixth edition	Issued April 14, 1998
1a addenda	Issued February 15, 1990	1a addenda	Issued March 10, 2000
1b addenda	Issued December 1, 1990	1b addenda	Issued November 30, 2001
Fourth edition	Issued June 15, 1992	Seventh edition	Issued April 15, 2002
1a addenda	Issued September 30, 1994	Eighth edition	Issued April 15, 2005

There were no inquiries prior to 1988.

Copyright ASME International
Provided by IHS under license with ASME
No reproduction or networking permitted without license from IHS Not for Resale

ASME CSD-1–2004

ISBN 0-7918-2929-4





A09104

Copyright ASME International
Provided by IHS under license with ASME
No reproduction or networking permitted without license from IHS

Not for Resale