AN AMERICAN NATIONAL STANDARD

ASME BPE-a–2004

ADDENDA

to

ASME BPE-2002
BIOPROCESSING EQUIPMENT

THE AMERICAN SOCIETY OF MECHANICAL ENGINEERS
Three Park Avenue • New York, NY 10016

Copyright ASME International
Provided by IHS under license with ASME
No reproduction or networking permitted without license from IHS
Not for Resale

Date of Issuance: May 20, 2005

ASME is the registered trademark of The American Society of Mechanical Engineers.

This code or standard was developed under procedures accredited as meeting the criteria for American National Standards. The Standards Committee that approved the code or standard was balanced to assure that individuals from competent and concerned interests have had an opportunity to participate. The proposed code or standard was made available for public review and comment that provides an opportunity for additional public input from industry, academia, regulatory agencies, and the public-at-large.

ASME does not "approve," "rate," or "endorse" any item, construction, proprietary device, or activity.

ASME does not take any position with respect to the validity of any patent rights asserted in connection with any items mentioned in this document, and does not undertake to insure anyone utilizing a standard against liability for infringement of any applicable letters patent, nor assumes any such liability. Users of a code or standard are expressly advised that determination of the validity of any such patent rights, and the risk of infringement of such rights, is entirely their own responsibility.

Participation by federal agency representative(s) or person(s) affiliated with industry is not to be interpreted as government or industry endorsement of this code or standard.

ASME accepts responsibility for only those interpretations of this document issued in accordance with the established ASME procedures and policies, which precludes the issuance of interpretations by individuals.

No part of this document may be reproduced in any form,
in an electronic retrieval system or otherwise,
without the prior written permission of the publisher.

The American Society of Mechanical Engineers
Three Park Avenue, New York, NY 10016-5990

Copyright © 2005 by
THE AMERICAN SOCIETY OF MECHANICAL ENGINEERS
All rights reserved
Printed in U.S.A.

Copyright ASME International
Provided by IHS under license with ASME
No reproduction or networking permitted without license from IHS

Not for Resale

ASME BPE-a–2004
SUMMARY OF CHANGES

Following approval by the ASME BPE Committee and ASME, and after public review, ASME BPE-a–2004 was approved by the American National Standards Institute on June 7, 2004.

Addenda to BPE-2002 are issued in the form of replacement pages. Revisions, additions, and deletions are incorporated directly into the affected pages. It is advisable, however, that this page, the Addenda title and copyright pages, and all replaced pages be retained for reference.

SUMMARY OF CHANGES

This is the first addenda to be published to ASME BPE-2002.

Replace or insert the pages listed. Changes given below are identified on the pages by a margin note **(a)** placed next to the affected area. The pages not listed are the reverse sides of the listed pages and contain no changes.

Page	*Location*	*Change*
iii – vi	Contents	Updated to reflect 2004 addenda
xii	Committee roster	Updated to reflect 2004 addenda
1	GR-1	First para. revised
	GR-2	First para. revised
3, 4, 4.1, 6, 7	GR-9	(1) ASTM A 967 added (2) ASTM B 912 added
	GR-10	(1) Definitions of *blind weld*; *cluster of pits*; *electropolishing*; *personal care products*; *pharmaceutical*; *pickling*; R_a *max.*; and *seal point* added
14	SD-3.11.1	(1) First para. revised (2) Third para. added
15	Table SD-1	(1) Sketch revised (2) Third and sixth columns deleted (3) Current fourth and fifth columns revised
16	Table SD-2	Deleted
17	Table SD-3	Deleted
18	Table SD-4	Deleted
19	Table SD-5	(1) Sketch revised (2) Fifth and eighth columns deleted (3) Current sixth and seventh columns revised
20	Table SD-6	(1) Fifth and eighth columns deleted

Copyright ASME International
Provided by IHS under license with ASME
No reproduction or networking permitted without license from IHS
Not for Resale

Page	*Location*	*Change*
		(2) Sixth and seventh columns revised
21	Figure SD-3	Sketches (c) and (e) revised
23, 24	SD-4.5.1(c)	Revised
	Figure SD-6	Revised
25	SD-4.7.1	Subparagraph (e) revised
26	Figure SD-8	Revised in its entirety
27	Figure SD-9	Revised in its entirety
28	Figure SD-11	(1) Title revised (2) Revised in its entirety
29	SD-4.7.5	Subparagraph (c) revised
31	Figure SD-15	Title revised
33	Figure SD-17	Sketches (f) and (g) revised
37	Figure SD-22	Title revised
	SD-4.9.2	Revised
	SD-4.9.3	Subparagraph (a) revised
41	SD-5.1	Corrected by errata
	SD-6	Subparagraph (p) added
43 – 45	DT-1	First paragraph revised
	DT-2	First paragraph revised
	DT-3.1	Subparagraph (a) revised
	DT-3.4	(1) First and second paragraphs revised (2) Third paragraph added
	DT-3.5	Second para. editorially revised
	Table DT-2	General note revised
	Table DT-3	Sixth and seventh entries in second column revised
	DT-6	(1) Second para. revised (2) Fifth para. revised
	Table DT-5	Tenth column added
	DT-6.1	Added
	DT-8	Third para. revised
48	Table DT-10	Last row added
	Table DT-11	Penultimate row added

Copyright ASME International
Provided by IHS under license with ASME
No reproduction or networking permitted without license from IHS
Not for Resale

Page	*Location*	*Change*
50	Table DT-14	36th – 42nd rows added
51	Table DT-17	Third column, sixth entry revised
52	Table DT-19	(1) Fifth column, twenty-seventh and twenty-eighth entries revised (2) Penultimate row added
53	Table DT-21	Penultimate row added
54	Table DT-23	Second and third columns, fifth and sixth entries revised
55	Table DT-24	(1) Second and third columns, fifth and sixth entries revised (2) Fourth and fifth columns, eighth entry revised
56	Table DT-26	Penultimate row added
	Table DT-28	Sketch revised
57	Table DT-29	Sketch revised
57.1, 57.2	Subsection DT-V	Added
58	MJ-1	First sentence revised
	MJ-2	Revised
59	MJ-4.1	Revised in its entirety
60 – 62	MJ-6.4	(1) First para. revised (2) Fourth para. added
	MJ-6.4.4	Revised
	MJ-6.4.5	New MJ-6.4.5 added
	MJ-6.4.5–MJ-6.4.9	Renumbered to reflect new paragraph
	Figure MJ-1	Sketch (c) revised
	MJ-6.4.10	Revised in its entirety
	MJ-6.5	Revised
	MJ-7.2.1	Second sentence added
63	MJ-7.2.2	Second para. added
	MJ-7.2.3	First, third, and fourth paras. revised
64	MJ-10	Revised in its entirety
66, 67	Table SF-1	Revised in its entirety
	SF-7	Last paragraph revised
	SF-8	(1) Subparagraph (a)(5) revised

Copyright ASME International
Provided by IHS under license with ASME
No reproduction or networking permitted without license from IHS
Not for Resale

Page	*Location*	*Change*
		(2) Subparagraph (b)(10) revised
	Table SF-2	Revised in its entirety
68	Table SF-3	Revised
	Table SF-4	Revised in its entirety
69	Table SF-5	Revised
	Table SF-6	Revised in its entirety
70	Table SF-7	Revised
70.1	Table SF-8	Revised in its entirety
70.2	Table SF-9	Added
	Table SF-10	Added
71	SG-1.1	First sentence revised
	SG-2.4	Added
72 – 73.1	SG-3.3.1(a)	Revised
	SG-3.3.1(b)	Title revised
	SG-3.4.1	(1) Title revised (2) Last sentence in first para. revised (3) Second para. added
	SG-3.4.2	Added
	SG-3.4.3	Renumbered to reflect new SG-3.4.2
84–84.7	Part PM	Added

Copyright ASME International
Provided by IHS under license with ASME
No reproduction or networking permitted without license from IHS
Not for Resale

CONTENTS

(a)

Foreword viii
Statements of Policy x
Committee Roster xii
Summary of Changes xv

Part GR General Requirements

GR-1 Introduction 1
GR-2 Scope 1
GR-3 Inspection 1
GR-4 Inspector/Examiner 1
GR-5 Responsibilities 2
GR-6 Access for Inspectors 2
GR-7 Manufacturer's Quality Assurance Program 2
GR-8 Metric 2
GR-9 References 2
GR-10 Terms and Definitions 3

Part SD Design for Sterility and Cleanability

SD-1 Introduction 9
SD-2 Scope and Purpose 9
SD-3 General Guidelines 9
SD-4 Specific Guidelines 18
SD-5 Testing and Inspection 40
SD-6 Documentation 41
SD-7 Responsibilities 42

Part DT Dimensions and Tolerances for Stainless Steel Automatic Welding and Hygienic Clamp Tube Fittings and Process Components

DT-1 Scope 43
DT-2 Pressure Rating 43
DT-3 Marking 43
DT-4 Materials 43
DT-5 Metal Thickness 43
DT-6 Fitting Dimensions 44
DT-7 Tests 45
DT-8 Tolerances 45
DT-9 Welding Ends 46
DT-10 Hygienic Clamp Ends 46
DT-11 Heat Treatment 46
DT-12 Surface Condition 46
DT-13 Packaging 46

Part MJ Material Joining

MJ-1 Scope 58

Copyright ASME International
Provided by IHS under license with ASME
No reproduction or networking permitted without license from IHS
Not for Resale

MJ-2 Materials 58
MJ-3 Joining Processes and Procedures 58
MJ-4 Weld Joint Design and Preparation 59
MJ-5 Filler Material 59
MJ-6 Weld Acceptance Criteria 59
MJ-7 Inspection, Examination, and Testing 62
MJ-8 Procedure Qualification 63
MJ-9 Performance Qualification 63
MJ-10 Documentation Requirements 63
MJ-11 Passivation 64

Part SF Stainless Steel and Higher Alloy Interior Surface Finishes
SF-1 Scope 65
SF-2 Objective 65
SF-3 Applications 65
SF-4 Material 65
SF-5 Typical Stainless Steel Interior Surface Anomaly Characteristics 65
SF-6 Classification of Interior Surface Finishes on Weldments for Process Equipment and Components 65
SF-7 Inspection and Techniques Employed in the Classification of Interior Surface Finishes 66
SF-8 Description of Various Surfaces Available on Stainless Steel and Higher Alloys 66

Part SG Equipment Seals
SG-1 Scope and Purpose 71
SG-2 Seal Classes 71
SG-3 General Provisions for Seals in Bioprocessing Service: User Basic Design Requirement 71
SG-4 Special Provisions for Seals in Bioprocessing Service 78

Part PM Polymer-Based Materials 84
PM-1 Introduction 84
PM-2 Design Considerations for Polymeric Piping, Tubing, Fittings, and Valve Bodies 84
PM-3 Polymer Material Joining 84.1
PM-4 Polymer Interior Wetted Surfaces of Piping, Tubing, Fittings, Valve Bodies, Coated or Lined Vessels 84.2
PM-5 Materials of Construction 84.2

Figures
SD-1 Hygienic Design Connections 12
SD-2 Typical Design of Fittings 13
SD-3 Flat Gasket Applications 21
SD-4 Recommended and Preferred Drop Designs 22
SD-5 Double Block-and-Bleed Valve Assembly 23
SD-6 Instrument Location Detail: Hygienic Design 24
SD-7 Flexible Hygienic Hose Design 24
SD-8 Tank/Vessel Vent Filters 26
SD-9 Nozzle Design 27
SD-10 Sidewall Instrument Ports 28
SD-11 Dip Pipe Tri-Clamp 28
SD-12 Vessel Design Tangential Nozzles 29
SD-13 Vessel Sight Glass Location 30

Copyright ASME International
Provided by IHS under license with ASME
No reproduction or networking permitted without license from IHS
Not for Resale

SD-14 Side and Bottom Connections 31
SD-15 Dip Pipe Nozzles: Removable Designs 31
SD-16 Sight Glass Design 32
SD-17 Internal Support Members 33
SD-18 Mitered Fittings 34
SD-19 Typical Nozzle Detail 34
SD-20 Step Shafts for Agitators and Mixers 35
SD-21 In-Tank Couplings 36
SD-22 Agitator Blade Design 37
MJ-1 Acceptable and Unacceptable Weld Profiles for Tube Welds 61
SG-1 Basic Components of a Seal 74
SG-2 Single Dry Running Contacting Seal 74
SG-3 Internally Mounted, Process Lubricated Contact Seal 75
SG-4 Externally Mounted, Process Lubricated Contact Seal 76
SG-5 Double Seal Installation 76
SG-6 Tandem Seal Installation 77
SG-7 Seal Piping and Lubrication Plans 78
SG-8 Gas Lubricated Noncontacting Double Seal 79
SG-9 Tandem Seal With Barrier System 79
SG-10 Typical Packing Installation 80
SG-11 V-Ring Packing for Reciprocating Applications 80
SG-12 Open Cross-Sectional Lip Seal 80
SG-13 Labyrinth Seal 80
SG-14 Typical Angle Valve With Rolling Diaphragm and Orifice 81
SG-15 Example of Sampling Valve With Uniformly Loaded Sliding Seal 82
SG-16 Typical In-Line Diaphragm Valve With Weir 82
SG-17 Typical Ball Valve Configuration 83
PM-1 Acceptable and Unacceptable Weld Profiles for Beadless Welds 84.3

Tables

SD-1 *L/D* Dimensions for Flow-Through Tee: Full-Size Standard Straight Tee With Blind Cap 15
SD-2 *L/D* Dimensions for Flow-Through Tee: Full-Size Standard Straight Tee With Diaphragm Valve 16
SD-3 Type A *C/D* Ratio (Tube Center to Weir Center) and *W/D* Ratio (Tube Wall ID to Weir Center) 17
SD-4 Type B *C/D* Ratio (Tube Center to Weir Center) and *W/D* Ratio (Tube Wall ID to Weir Center) 18
SD-5 *L/D* Dimensions for Flow-Through Tee: Short Outlet Reducing Tee With Blind Cap 19
SD-6 Recommended Flow Rates to Achieve 5 fps (1.52 mps) 40
SD-7 Recommended Flow Rates for Cleaning Vertical Cylindrical Vessels Having Dished Heads 40
DT-1 Nominal OD Tubing Sizes 44
DT-2 Hygienic Unions 44
DT-3 Chemical Composition for Automatic Weld Ends, % 44
DT-4 Tangent Lengths 44
DT-5 Final Tolerances for Mechanically Polished Fittings and Process Components 45
DT-6 Final Tolerances for Electropolished Fittings and Process Components 46
DT-7 Automatic Tube Weld: 90 deg Elbow 46
DT-8 Automatic Tube Weld: 45 deg Elbow 47

Copyright ASME International
Provided by IHS under license with ASME
No reproduction or networking permitted without license from IHS
Not for Resale

DT-9 Automatic Tube Weld: Straight Tee and Cross 47
DT-10 Automatic Tube Weld: Reducing Tee 48
DT-11 Automatic Tube Weld: Concentric and Eccentric Reducer 48
DT-12 Automatic Tube Weld: Hygienic Clamp Joint, 90 deg Elbow 49
DT-13 Automatic Tube Weld: Hygienic Clamp Joint, 45 deg Elbow 49
DT-14 Automatic Tube Weld: Short Outlet Hygienic Clamp Joint Reducing Tee 50
DT-15 Automatic Tube Weld: Short Outlet Hygienic Clamp Joint Tee 50
DT-16 Hygienic Clamp Joint: 90 deg Elbow 51
DT-17 Hygienic Clamp Joint: 45 deg Elbow 51
DT-18 Hygienic Clamp Joint: Straight Tee and Cross 52
DT-19 Hygienic Clamp Joint: Reducing Tee 52
DT-20 Hygienic Clamp Joint: Short Outlet Reducing Tee 53
DT-21 Hygienic Clamp Joint: Concentric and Eccentric Reducer 53
DT-22 Automatic Tube Weld: Ferrule 54
DT-23 Automatic Tube Weld: 180 deg Return Bend 54
DT-24 Hygienic Clamp Joint: 180 deg Return Bend 55
DT-25 Hygienic Mechanical Joint: Short Outlet Run Tee 55
DT-26 Hygienic Clamp Joint: Tube Weld Concentric and Eccentric Reducer 56
DT-27 Hygienic Clamp Joint: Short Outlet Tee 56
DT-28 Automatic Tube Weld: Instrument Tee 56
DT-29 Hygienic Clamp Joint: Instrument Tee 57
DT-30 Automatic Tube Weld: Cap 57
SF-1 Acceptance Criteria for Interior Surface Finishes of Tubing 66
SF-2 R_a Readings for Tubing 67
SF-3 Acceptance Criteria for Interior Surface Finishes of Fittings 68
SF-4 R_a Readings for Fittings 68
SF-5 Acceptance Criteria for Interior Surface Finishes of Valve Bodies 69
SF-6 R_a Readings for Valves 69
SF-7 Acceptance Criteria for Interior Surface Finishes of Vessels 70
SF-8 R_a Readings for Vessels 70
SG-1 Common Rotary Seal Materials for Biochemical and Sterile Service 77
PM-1 Size Comparison of Common Thermoplastic Sizing Standards 84.2

Nonmandatory Appendix

A Commentary: Slag 85

Index 86

Copyright ASME International
Provided by IHS under license with ASME
No reproduction or networking permitted without license from IHS
Not for Resale

not been met. Data Report Forms covering items not fully complying with ASME requirements shall not refer to ASME or they shall clearly identify all exceptions to the ASME requirements.

ASME's role as an accrediting rather than certifying organization shall be made clear on stampings, labels, or nameplate markings by inclusion of the words: Certified by _____.
(Fabricator)

--`,,`,`-`-`,,`,,`,`,,`---

Copyright ASME International
Provided by IHS under license with ASME
No reproduction or networking permitted without license from IHS

Not for Resale

(a) ASME BIOPROCESSING EQUIPMENT COMMITTEE

(The following is the roster of the Committee as of October 10, 2003.)

OFFICERS

A. P. Cirillo, *Chair*
B. K. Henon, *Vice Chair*
P. D. Stumpf, *Secretary*

COMMITTEE PERSONNEL

J. Ankers, Life Tek Solutions, Inc.
D. D. Baram, Clifton Enterprises
E. A. Benway, Swagelok Co.
N. R. Brooks, Fluor Daniel, Inc.
C. R. Brown, Swagelok Co.
W. H. Cagney, Biokinetics
A. P. Cirillo, Jacobs Engineering Group, Inc.
R. D. Campbell, Purity Systems, Inc.
J. A. DeClark, Trent Tube
J. Dvorscek, Abbott Laboratories
P. G. El-Sabaaly, Sharpsville Container Corp.
E. B. Fisher, Fisher Engineering
M. M. Gonzalez, Amgen, Inc.
B. K. Henon, Arc Machines, Inc.
M. A. Hohmann, Eli Lilly & Co.
T. Hoobyar, Asepco, Inc.
L. T. Hutton, Arkema Inc.
A. Konopka, Eli Lilly & Co.
J. T. Mahar, Cuno, Inc.
F. J. Manning, Tek A Div-of Spectrum Metals
M. Pelletier, IDC
L. J. Peterman, Robert-James Sales
W. L. Roth, Procter & Gamble
D. P. Sisto, Purity Systems, Inc.
C. A. Trumbull, Paul Mueller Co.
P. D. Stumpf, The American Society of Mechanical Engineers
R. J. Zinkowski, ITT Engineered Valves

EXECUTIVE COMMITTEE

B. K. Henon, *Chair,* Arc Machines, Inc.
J. Ankers, Life Tek Solutions, Inc.
E. A. Benway, Swagelok Co.
C. R. Brown, Swagelok Co.
W. H. Cagney, Biokinetics
R. D. Cambell, Purity Systems, Inc.
A. P. Cirillo, Jacobs Engineering Group, Inc.
P. G. El-Sabaaly, Sharpsville Container Corp.
L. T. Hutton, Arkema Inc.
F. J. Manning, Tek A Div-of Spectrum Metals

Copyright ASME International
Provided by IHS under license with ASME
No reproduction or networking permitted without license from IHS
Not for Resale

L. J. Peterman, Robert-James Sales
D. Smith, Consultant
C. Trumbull, Paul Mueller Co.

SUBCOMMITTEE ON GENERAL REQUIREMENTS AND EDITORIAL REVIEW

E. A. Benway, *Chair,* Swagelok Co.
D. D. Baram, Clifton Enterprises
C. R. Brown, Swagelok Co.
W. H. Cagney, Biokinetics
R. Campbell, Purity Systems, Inc.
A. P. Cirillo, Jacobs Engineering Group, Inc.
B. K. Henon, ARC Machines, Inc.
M. A. Hohmann, Eli Lilly & Co.

SUBCOMMITTEE ON DESIGN RELATING TO STERILITY AND CLEANABILITY OF EQUIPMENT

J. Ankers, *Chair,* Life Tek Solutions, Inc.
B. E. Fisher, *Vice Chair,* Fisher Engineering
B. A. Billmyer, Central States Industrial Equipment
N. R. Brooks, Fluor Daniel, Inc.
C. Chapman, GEMU Valves
P. G. El-Sabaaly, Sharpsville Container Corp.
M. Gagne, AlphaBio, Inc.
S. Hanstke, Kinetics Modular Systems
T. L. Hobick, Holland Applied Technologies
T. Hoobyar, Asepco
M. W. Keller, Amgen, Inc.
A. Konopka, Eli Lilly & Co.
J. Mahar, Cuno, Inc.
D. M. Marks, DME Alliance Inc.
S. Miller, Wyeth Biopharma
M. Pelletier, IDC
R. Perusek, Swagelok Co.
G. M. Posten, Paul Mueller Co.
J. J. Rotman, Integrated Project Services
G. A. Thorp, Burns Engineering
R. E. Trub, Alfa Laval Separations
V. Tsui, Elan Pharmaceuticals
E. Vong, Abbott Laboratories
R. T. Warf, Merck & Co., Inc.
R. J. Zinkowski, ITT Engineered Valves

SUBCOMMITTEE ON DIMENSIONS AND TOLERANCES

F. J. Manning, *Chair,* Tek A Div-of Spectrum Metals
D. J. Mathien, *Vice Chair* Swagelok Biopharm Services Co.
C. C. Bautz, Alfa Laval
B. A. Billmyer, Central States Industrial Equipment
C. Chapman, GEMU Valves
J. A. Declark, Trent Tube
P. M. Dunbar, VNE Corp.
J. Dvorscek, Abbott Laboratories
M. M. Gonzalez, Amgen, Inc.
R. P. Klemp, Advance Fittings Corp
G. Kroehnert, Dockweiler AG

Copyright ASME International
Provided by IHS under license with ASME
No reproduction or networking permitted without license from IHS
Not for Resale

J. T. Mahar, Cuno, Inc.
P. McLune, ITT Engineered Valves
H. Murphy, Global Stainless
L. J. Peterman, Robert-James Sales
S. M. Reed, Dockweiler - USA
C. Taylor, Crane Saunders
T. A. Willis, United Stainless, Inc.
T. Wolfe, Fluidline Technology

SUBCOMMITTEE ON MATERIAL JOINING

C. A. Trumbull, *Chair,* Paul Mueller Co.
R. D. Campbell, *Vice Chair,* Purity Systems, Inc.
E. A. Benway, Swagelok Co.
R. G. Duran, QAM
J. Dvorscek, Abbott Laboratories
R. Hanselka, IES
C. Hartrampf GEMU Valves, Inc.
B. K. Henon, Arc Machines, Inc.
M. A. Hohmann, Eli Lilly & Co.
C. E. Kettermann, Rath Manufacturing
K. Kimbrel, Central States Industrial
P. McLune, ITT Engineered Valves
N. Oliver, MECO
H. Reinhold, Purity Systems, Inc.
W. L. Roth, Procter and Gamble
D. P. Sisto, Purity Systems, Inc.
T. Sixsmith, George Fischer, Inc.
C. Weeks, Kinetics

SUBCOMMITTEE ON SURFACE FINISH

P. G. El-Sabaaly, *Chair,* Sharpsville Container Corp.
J. A. Declark, *Vice Chair,* Trent Tube
C. H. Carnes, Purity Systems, Inc.
M. M. Gonzalez, Amgen, Inc.
D. W. Hamilton, United Industries
B. K. Henon, Arc Machines, Inc.
F. J. Manning, Tek A Div-of Spectrum Metals
D. J. Mathien, Swagelok Biopharm Services Co.
H. Murphy, Global Stainless Ltd.
N. Olivier, MECO
D. Perona, Advance Fittings Corp.
L. J. Peterman, Robert-James Sales
S. M. Reed, Dockweiler - USA
P. D. Sedivy, Rath Manufacturing
D. M. Seesdorf, MKS Instruments Inc.
C. Stephens, Alfa Laval, Inc.
C. Taylor, Crane Saunders
V. Tsui, Elan Pharmaceuticals
T. Wolfe, Fluid Line Technology
R. J. Zinkowski, ITT Engineered Valves

SUBCOMMITTEE ON SEALS

C. R. Brown, *Chair,* Swagelok Co.
D. D. Baram, Clifton Enterprises
L. Bongiorno, Rubber Fab
C. Hartrampf, GEMU Valves, Inc.
D. Helmke, Flow Products, LLC

--`,,`,,`-`-`,,`,,`,`,,`---

Copyright ASME International
Provided by IHS under license with ASME
No reproduction or networking permitted without license from IHS

Not for Resale

L. T. Hutton, Arkema Inc.
A. Kranc, Industrial Construction/Design
A. R. Obertanec, LJ Star, Inc.
M. Pelletier, IDC
R. Schnell, Dupont DOW Elastomers
J. R. Van Der Post, Hyjoin Ltd.
J. Vitti, Crane/Saunders Bio-pharm
R. J. Zinkowski, ITT Engineered Valves
M. A. Zumbrum, Maztech, Inc.

SUBCOMMITTEE ON POLYMERS AND ELASTOMERS

L. T. Hutton, *Chair,* Arkema Inc.
H. P. Fisher, Fisher/Moore
J. C. Fulcher, J2D, Inc.
R. Govaert, Asahi America, Inc.
R. Hanselka, IES
D. P. Kemkes, Entegris, Inc.
P. R. Khaladkar, Dupont
R. W. Schnell, Dupont DOW Elastomers
T. Sixsmith, George Fischer, Inc.
M. A. Zumbrum, Maztech, Inc.

Copyright ASME International
Provided by IHS under license with ASME
No reproduction or networking permitted without license from IHS
Not for Resale

--`,,`,`-`-`,,`,,`,`,,`---
Copyright ASME International
Provided by IHS under license with ASME
No reproduction or networking permitted without license from IHS
Not for Resale

BIOPROCESSING EQUIPMENT

PART GR
GENERAL REQUIREMENTS

(02) (a) GR-1 INTRODUCTION

This Standard provides the requirements applicable to the design of equipment used in the bioprocessing, pharmaceutical, and personal care product industries, including aspects related to sterility and cleanability, materials, dimensions and tolerances, surface finish, material joining, and seals. These apply to:

(a) components that are in contact with the product, raw materials, or product intermediates during manufacturing, development, or scale-up;

(b) systems that are a critical part of product manufacture [e.g., water-for-injection (WFI), clean steam, filtration, and intermediate product storage].

This Standard does not apply to those components of the system that are not in contact with the finished product or are a part of the intermediate manufacturing stages (e.g., computer systems, electrical conduits, and external system support structures).

Steam sterilized systems normally meet pressure vessel design codes. Other equipment or systems as agreed to by the manufacturer and owner/user may not require adherence to these codes.

When operating under pressure conditions, the systems shall be constructed in accordance with the ASME Boiler and Pressure Vessel Code (BPVC), Section VIII, Division 1, and the ASME B31.3, Process Piping Code, respectively. The owner/user can stipulate additional specifications and requirements. When an application is covered by laws or regulations issued by an Enforcement Authority (e.g., municipal, provincial, state, or federal), the final construction requirements shall comply with these laws. However, all the previously mentioned construction codes shall be satisfied including those instances where these codes are not referred to in the current BPE Standard (e.g., weld acceptance criteria, inspection requirements, pressure testing, etc.).

(02) (a) GR-2 SCOPE

This Standard deals with the requirements of the bioprocessing, pharmaceutical, and personal care product industries as well as other applications with relatively high levels of hygienic requirements, covering directly or indirectly the subjects of materials, design, fabrication, pressure systems (vessels and piping), examinations, inspections, testing, and certifications. Items or requirements that are not specifically addressed in this Standard cannot be considered prohibited. Engineering judgments must be consistent with the fundamental principles of this Standard. Such judgments shall not be used to overrride mandatory regulations or specific prohibitions of this Standard.

GR-3 INSPECTION

The inspection requirements are specified in each Part of this Standard. If an inspection or examination plan is required, it shall be developed and agreed to by the owner/user, contractor, inspection contractor, and/or engineer ensuring that the systems and components meet this Standard.

GR-4 INSPECTOR/EXAMINER

Inspector and examiner in this Standard shall be defined for:

(a) Pressure Vessels. An Authorized Inspector, as defined in ASME BPVC, Section VIII, Division 1, para. UG-91;

(b) Piping, Tubing, and Non-Code Vessels. An owner/user's inspector, as defined in ASME B31.3, para. 340.4(a); and

(c) Piping and Tubing. An examiner, defined as a person who performs quality control examinations for a manufacturer as an employee of the manufacturer as defined in ASME B31.3, para. 341.1.

When local regulations require that pressure equipment be designed and constructed in accordance with standards other than ASME codes/standards, the inspector in this Standard is defined as one who is acceptable to the relevant regulatory authority.

Copyright ASME International
Provided by IHS under license with ASME
No reproduction or networking permitted without license from IHS
Not for Resale

GR-5 RESPONSIBILITIES

The responsibilities of inspection personnel are defined as follows.

(02) GR-5.1 Pressure Vessels

The responsibilities of the owner's Inspector shall be the same as the inspector in ASME BPVC, Section VIII, Division 1, UG-91.

(02) GR-5.2 Piping, Tubing, and Noncode Vessels

The responsibilities of the owner/user's inspector shall be in accordance with ASME B31.3, para. 340.2.

(02) GR-6 ACCESS FOR INSPECTORS

Manufacturers of bioprocessing equipment and components shall allow free access of owner/user and authorized inspection personnel at all times while work on the equipment or components is being performed. The notification of an impending inspection should be mutually agreed to by the manufacturer and the inspector. Access may be limited to the area of the manufacturer's facility where assembly, fabrication, welding, and testing of the specific equipment or components is being performed. Inspectors shall have the right to audit any examination, to inspect components using any examination method specified in the Design Specification (including Purchase Order), and review all certifications and records necessary to satisfy the requirements of GR-5. The manufacturer shall provide the inspector with work progress updates.

(02) GR-7 MANUFACTURER'S QUALITY ASSURANCE PROGRAM

The manufacturer shall implement a quality assurance program describing the systems, methods, and procedures used to control materials, drawings, specifications, fabrication, assembly techniques, and examination/inspection used in the manufacturing of bioprocessing equipment.

GR-8 METRIC

Metric units in this Standard are conversions from U. S. Customary units, and are for reference purposes only unless specified otherwise.

GR-9 REFERENCES (02) (a)

For the purpose of this Standard, the most recent approved version of the following referenced standards shall apply.

ANSI/AWS A3.0, Standard Welding Terms and Definitions
ANSI/AWS QC-1, Standard for AWS Certification of Welding Inspectors
AWS D18.2, Guide to Weld Discoloration Levels on the Inside of Austenitic Stainless Steel Tube

Publisher: American Welding Society (AWS), 550 NW LeJeune Road, Miami, FL 33135

ASME Boiler and Pressure Vessel Code, Section V, Nondestructive Examination
ASME Boiler and Pressure Vessel Code, Section VIII, Division 1, Pressure Vessels
ASME Boiler and Pressure Vessel Code, Section IX, Welding and Brazing Qualifications
ASME B31.1, Power Piping
ASME B31.3, Process Piping
ASME B46.1, Surface Texture (Surface Roughness, Waviness, and Lay)

Publisher: American Society of Mechanical Engineers (ASME), Three Park Avenue, New York, NY 10016; Order Department: 22 Law Drive, Box 2300, Fairfield, NJ 07007

ASTM A 20/A 20M, Standard Specification for General Requirements for Steel Plates for Pressure Vessels
ASTM A 182/A 182M, Specification for Forged or Rolled Alloy-Steel Pipe Flanges, Forged Fittings, and Valves and Parts for High-Temperature Service
ASTM A 213/A 213M, Specification for Seamless Ferritic and Austenitic Alloy-Steel Boiler, Super Heater, and Heat-Exchanger Tubes
ASTM A 269, Seamless and Welded Austenitic Stainless Steel Tubing for General Service
ASTM A 270, Specification for Seamless and Welded Austenitic Stainless Steel Sanitary Tubing
ASTM A 312/A 312M, Seamless and Welded Austenitic Stainless Steel Pipes
ASTM A 351/A 351M, Specification for Casting, Austenitic, Austenitic-Ferritic (Duplex), for Pressure-Containing Parts
ASTM A 380, Practice for Cleaning and Descaling Stainless Steel Parts, Equipment, and Systems
ASTM A 480/A 480M, Specification for General Requirements for Flat-Rolled Stainless and Heat-Resisting Steel Plate, Sheet, and Strip

Copyright ASME International
Provided by IHS under license with ASME
No reproduction or networking permitted without license from IHS
Not for Resale

ASTM A 484/A 484M, Specification for General Requirements for Stainless and Heat-Resisting Steel Bars, Billets, and Forgings
ASTM A 666, Specification for Austenitic Stainless Steel Sheet, Strip, Plate, and Flat Bar
ASTM A 967, Standard Specification for Chemical Passivation Treatment for Stainless Steel Parts
ASTM B 912, Standard Specification for Passivation of Stainless Steel Using Electropolishing
ASTM E 112, Test Methods for Determining the Average Grain Size

Publisher: American Society for Testing and Materials (ASTM), 100 Barr Harbor Drive, West Conshohocken, PA 19428

FDA, 21 CFR, Parts 210 and 211, Current Good Manufacturing Practices
cGMP: current Good Manufacturing Practices, Title 21 of the Food and Drug Administration

Publisher: U.S. Food and Drug Administration (U.S. FDA), 5600 Fishers Lane, Rockville, MD 20857

NIH (BL-1/BL-4), Biohazard Containment Guidelines

Publisher: National Institutes of Health (NIH), Bethesda, MD 20892

SNT-TC-1A, Recommended Practice for Nondestructive Testing Personnel Qualification and Certification

Publisher: American Society for Nondestructive Testing (ASNT), 1711 Arlingate Lane, P.O. Box 28518, Columbus, OH 43228

3-A, Sanitary Standards

Publisher: Techstreet, 1327 Jones Drive, Ann Arbor, MI 48105

(a) GR-10 TERMS AND DEFINITIONS

annealing: a treatment process for steel for the purpose of reducing hardness, improving machinability, facilitating cold working, or producing a desired mechanical, physical, or other property.

anomaly: a localized surface area that is out of specifications to the surrounding area, and is classified as abnormal.

(02) *arc strike:* a discontinuity consisting of any localized remelted metal, heat-affected metal, or change in the surface profile of any part of a weld or base metal resulting from an arc, generated by the passage of electrical current between the surface of the weld or base material and a current source, such as a welding electrode, magnetic particle prod, or electropolishing electrode.

aseptic: free of pathogenic (causing or capable of causing disease) microorganisms.

aseptic processing: operating in a manner that prevents contamination of the process.

autogenous weld: a weld made by fusion of the base material without the addition of filler. (See also *gas tungsten-arc welding.*)

automatic welding: welding with equipment that performs the welding operation without adjustment of the controls by a welding operator. The equipment may or may not perform the loading and unloading of the work. (See also *machine welding.*)

biologics: therapeutic or diagnostic products generated and purified from natural sources.

biopharmaceuticals: ethical pharmaceutical drugs derived through bioprocessing.

bioprocessing: the creation of a product utilizing a living organism.

bioprocessing equipment: equipment, systems, or facilities used in the creation of products utilizing living organisms.

blind weld (or closure weld): a weld joint by design that cannot feasibly be visually inspected internally.

break: a discontinuity in the face of a fitting.

burn-through: excessive melt-through or a hole through the root bead of a weld. **(02)**

burr: excess material protruding from the edge typically resulting from operations such as cutting or facing. **(02)**

butt joint: a joint between two members lying approximately in the same plane.

cavitation: a condition of liquid flow where, after vaporization of the liquid, the subsequent collapse of vapor bubbles can produce surface damage.

certification: documented testimony by qualified authorities that a system qualification, calibration, validation, or revalidation has been performed appropriately and that the results are acceptable.

cGMPs: current Good Manufacturing Practices. Current design and operating practices developed by the pharmaceutical industry to meet FDA requirements as published in the Code of Federal Regulations, Chapter 1, Title 21, Parts 210 and 211.

Copyright ASME International
Provided by IHS under license with ASME
No reproduction or networking permitted without license from IHS
Not for Resale

chromatography: the purification of substances based on the chemical, physical, and biological properties of the molecules involved.

clean: free of dirt, residues, detergents, or any contaminants that may affect or adulterate the product or process.

clean-in-place (CIP): internally cleaning a piece of equipment without relocation or disassembly. The equipment is cleaned but not necessarily sterilized. The cleaning is normally done by acid, caustic, or a combination of both, with Water-for-Injection (WFI) rinse.

clean steam: steam free from boiler additives that may be purified, filtered, or separated. Usually used for incidental heating in pharmaceutical applications.

cloudiness: the appearance of a milky white hue across some portion of a surface resulting from the electropolish process.

cluster of pits: two or more pits the closest distance between each being less than the diameter of any one pit.

cluster porosity: porosity that occurs in clumps or clusters.

concavity: a condition in which the surface of a welded joint is depressed relative to the surface of the tube or pipe. Concavity is measured as a maximum distance from the outside or inside diameter surface of a welded joint along a line perpendicular to a line joining the weld toes.

consumable insert: a ring of metal placed between the two elements to be welded that provides filler for the weld, when performed with fusion welding equipment. A consumable insert can also be used for the root pass in a multiple pass weld with the addition of filler wire (also called *insert ring*).

convexity: a condition in which the surface of a welded joint is extended relative to the surface of the tube or pipe. Convexity is measured as a maximum distance from the outside or inside diameter surface of a welded joint along a line perpendicular to a line joining the weld toes.

cracks: fracture-type discontinuities characterized by a sharp tip and high ratio of length and width to opening displacement. A crack may not be detected with a stylus. A linear crack will produce a liquid penetrant indication during liquid penetration inspection, X-ray, or ultrasound.

crater: a depression at the termination of a weld bead.

crater cracks: cracks that form in the crater, or end, of the weld bead.

dead leg: an area of entrapment in a vessel or piping run that could lead to contamination of the product.

defects: discontinuities that by nature or accumulated effect (for example, total crack length) render a part or product unable to meet minimum applicable acceptable standards or specifications. This term designates rejectability. (See also *discontinuity*.)

delamination: separation into constituent layers.

demarcation: a localized area that is dissimilar to the surrounding areas with a defined boundary after electropolishing.

dent: a large, smooth-bottomed depression whose diameter or width is greater than its depth and which will not produce an indication.

dirty: a relative term indicating the condition of being contaminated.

discoloration: any change in surface color from that of the base metal. Usually associated with oxidation occurring on the weld and heat-affected zone on the outside diameter and inside diameter of the weld joint as a result of heating the metal during welding. Colors may range from pale bluish-gray to deep blue, and from pale straw color to a black crusty coating.

discontinuity: interruption of the typical structure of a weldment, such as a lack of homogeneity in the mechanical, metallurgical, or physical characteristics of the material or weldment. A discontinuity is not necessarily a defect.

downslope: that part of an automatic orbital weld sequence during which the welding current is gradually reduced prior to extinguishing of the welding arc. The downslope portion of a welded joint is seen as a tapering of the end of the weld bead with a reduction of penetration from the beginning to the end of the downslope so that the final weld bead is small with minimal penetration.

dross: a concentration of impurity formed in the weld puddle. It floats to the surface when the metal solidifies (also called slag).

elastomeric material: a material that can be stretched or compressed repeatedly and, upon immediate release of stress, will return to its approximate original size.

Copyright ASME International
Provided by IHS under license with ASME
No reproduction or networking permitted without license from IHS
Not for Resale

electropolishing: a controlled electro-chemical process utilizing acid electrolyte, DC current, anode, and cathode to smooth the surface by removal of metal.

ethical pharmaceutical: a controlled substance for the diagnosis or treatment of disease.

excessive penetration: weld penetration that exceeds the acceptance limit for inside diameter convexity. (See also *convexity*.)

fermentation: the biochemical synthesis of organic compounds by microorganisms or cultivated cells.

Copyright ASME International
Provided by IHS under license with ASME
No reproduction or networking permitted without license from IHS
Not for Resale

Copyright ASME International
Provided by IHS under license with ASME
No reproduction or networking permitted without license from IHS
Not for Resale

fermentor (fermenter): a vessel for carrying out fermentation.

full penetration: A weld joint is said to be fully penetrated when the depth of the weld extends from its face into the weld joint so that the joint is fully fused. For a tube-to-tube weld, no unfused portions of the weld joint shall be visible on the inside diameter of a fully penetrated weld.

fusion: the melting together of filler metal and base metal, or of base metal only, that results in coalescence.

fusion welding: welding in which the base material is fused together without the addition of filler material to the weld. (See also *gas tungsten-arc welding*.)

gas tungsten-arc welding (GTAW): an arc welding process that produces coalescence of metals by heating them with an arc between a tungsten (nonconsumable) electrode and the work. Shielding is obtained from a gas or gas mixture. (This process is sometimes called TIG welding, a nonpreferred term.) GTAW may be performed by adding filler material to the weld, or by a fusion process in which no filler is added.

GMP facility: a facility designed, constructed, and operated in accordance with cGMP guidelines established by the FDA.

harvesting: the separation of cells from growth media. This can be accomplished by filtration, precipitation, or centrifugation.

heat number: an alphanumeric identification of a stated tonnage of metal obtained from a continuous melting in a furnace.

heat-affected zone: that portion of the base metal that has not been melted, but whose microstructure or mechanical properties have been altered by the heat of welding or cutting.

hold-up volume: the volume of liquid remaining in a vessel or piping system after it has been allowed to drain.

hydrotest: a pressure test of piping, pressure vessels, or pressure-containing parts, usually performed by pressurizing the internal volume with water at a pressure determined by the applicable code.

hygienic: of or pertaining to equipment and piping systems that by design, materials of construction, and operation provide for the maintenance of cleanliness so that products produced by these systems will not adversely affect human or animal health.

hygienic clamp joint: a tube outside diameter union consisting of two neutered ferrules having flat faces with a concentric groove and mating gasket that is secured with a clamp, providing a nonprotruding, recessless product contact surface.

hygienic joint: a tube outside diameter union providing a nonprotruding, recessless product contact surface.

icicles: localized regions of excessive penetration, which usually appear as long, narrow portions of weld metal on the weld underbead. (See also *convexity* and *excessive penetration*.)

inclusions: particles of foreign material in a metallic matrix. The particles are usually compounds such as oxides, sulfides, or silicates, but may be any substance foreign to and essentially insoluble in the matrix.

incomplete fusion (or lack of fusion): a weld discontinuity in which fusion did not occur between weld metal and faces or between adjoining weld beads. Also, in welding of tubing, when the weld fully penetrates the wall thickness but misses the joint, leaving some portion of the inner (inside diameter) weld joint with unfused edges.

incomplete penetration (or lack of penetration): a groove weld in which the weld metal does not extend completely through the joint thickness.

indication: a condition or an anomaly of a localized area that has not been classified as being accepted or rejected.

joint penetration: the depth that a weld extends from its face into a joint, exclusive of reinforcement.

lack of fusion after reflow: a discontinuity in welding of tubing where, after a reflow or second weld pass has been made, the original joint has still not been consumed, leaving the weld joint with unfused edges on the inner surface.

lamellar tears: terrace-like fractures in the base metal with a basic orientation parallel to the wrought surface; caused by the high stress in the thickness direction that results from welding.

laminations: elongated defects in a finished metal product, resulting from the rolling of a welded or other part containing a blowhole. Actually, the blowhole is stretched out in the direction of rolling.

linear porosity: porosity that occurs in a linear pattern. Linear porosity generally occurs in the root pass from inadequate joint penetration.

Copyright ASME International
Provided by IHS under license with ASME
No reproduction or networking permitted without license from IHS Not for Resale

liquid penetrant indication: refer to ASME BPVC, Section V, Article 6, para. T-600, for testing an anomaly or an indication.

machine welding: welding with equipment that performs the welding operation under the constant observation and control of a welding operator. The equipment may or may not perform the loading and unloading of the works. (See also *automatic welding*.)

manual welding: welding in which the entire welding operation is performed and controlled by hand.

material type: a commercial designation for a given chemistry range.

maximum working pressure: the pressure at which the system is capable of operating for a sustained period of time.

maximum working temperature: the temperature at which the system must operate for a sustained period of time. The maximum working temperature should relate to the maximum working pressure and the fluids involved.

meandering: of or pertaining to a weld bead that deviates from side to side across the weld joint rather than tracking the joint precisely.

micron or micrometer (μm): one-millionth of a meter.

misalignment (mismatch): axial offset of the joint members.

miter: two or more straight sections of tube matched and joined in a plane bisecting the angle of junction so as to produce a change of direction.

nick: a surface void anomaly caused by material removal or compression from the surface, whose bottom surface is usually irregular.

nominal outside diameter: a numerical identification of outside diameter to which tolerances apply.

nominal wall thickness: a numerical identification of wall thickness to which tolerances apply.

nonuniform mechanical polishing marks: a localized surface polishing pattern that is dissimilar to the surrounding area.

off angle: a measurement of face-to-face squareness.

off plane: a measurement of the offset between port centerlines or two planes.

orange peel: an appearance of a pebbly surface.

orbital welding: automatic or machine welding of tubes or pipe in-place with the electrode rotating (or orbiting) around the work. Orbital welding can be done with the addition of filler material or as a fusion process without the addition of filler.

overlap: the protrusion of weld metal beyond the weld toes or weld root. Also, in an orbital weld, that amount by which the end of the weld bead overlaps the beginning of the weld bead (not including the downslope) on a single-pass weld.

owner/user: the body upon which final possession or use rests.

oxidation: the formation of an oxide layer on a metal surface. When oxidation occurs as a result of welding, it is visible as discoloration. The discoloration or heat tint produced by oxidation has been associated with the onset of corrosion in stainless steel piping systems.

oxide layer: an area usually located in the heat-affected zone of the weldment where an oxidation reaction has taken place.

passivation: a final treatment/cleaning process used to remove free iron or other anodic contaminants from the surfaces of corrosion-resistant steel parts such that uniform formation of a passive layer is obtained.

passive layer: a passive oxidized film that forms naturally on the stainless steel surface when exposed to air or similar oxidizing environment protecting the underlying base metal from corrosion.

penetration: see *full penetration, incomplete penetration, joint penetration.*

personal care products: products used for personal hygiene or cosmetic care.

pharmaceutical: relating to the use and/or manufacture of medical drugs or compounds used to diagnose, treat, or prevent a medical condition.

pickling: a chemical process for cleaning and descaling stainless steel and other alloy parts, equipment, and systems.

pipe: pipe size is determined by diameter and schedule. For bioprocessing equipment, *pipe* does not include *tube*.

pit: a small surface void resulting from a localized loss of base metal by corrosion or etching, or by the removal of surface inclusions during electropolishing or passivation. A pit may or may not produce an indication during liquid penetrant inspection.

Copyright ASME International
Provided by IHS under license with ASME
No reproduction or networking permitted without license from IHS Not for Resale

pitch: to cause to be set at a particular angle or slope. Degree of slope or elevation.

porosity: cavity-type discontinuities formed by gas entrapment during solidification.

pressure rating: pressure at which a system is designed to operate, allowing for applicable safety factors.

product contact surface: a surface that contacts raw materials, process materials, and/or product.

progressive polishing: a mechanical grinding procedure where a coarse grit material is used first and the successive operations use a finer and finer grit until the desired surface roughness is achieved.

pure steam: steam that is produced by a steam generator which, when condensed, meets requirements for Water-for-Injection (WFI).

pyrogen: a fever-producing substance.

R_a: log of the arithmetic mean of the surface profile. Usually expressed in μin. as related to roughness. (See ASME B46.1.)

R_a max: the highest value of a series of R_a readings.

reflow: a second weld pass made to correct a lack of fusion or missed joint.

reinforcement: See *convexity*.

sanitary: See *hygienic*.

(02) *sanitary (hygienic) weld:* generally considered to be a groove weld in a square butt joint made by the GTAW (or plasma) process as a fusion weld without the addition of filler material. A sanitary weld must be completely penetrated on the weld ID, with little or no discoloration due to oxidation, and be otherwise without defects that would interfere with maintenance in a clean and sterile condition.

seal point: location of process boundary created by components in contact (seal), having sufficient contact stress/load to create media or environmental isolation.

seal weld: a weld used to obtain fluid tightness as opposed to mechanical strength.

self-draining: the elimination of all fluid from the system due to the force of gravity alone.

semi-automatic arc welding: arc welding with equipment that controls only the filler metal feed. The advance of the welding is manually controlled.

service life: the life expectancy or number of cycles for which the unit will maintain its performance.

size classification: The size of surface deficits is classified in two groups: macro, referring to indications that can be seen in adequate lighting without magnification, and micro, referring to indications that can be seen only with the aid of magnification.

slag: a concentration of nonmetallic impurities (often oxides or nitrides) that forms in the weld pool and solidifies on the underbead or weld top surface. Sometimes referred to as dross.

slope: an incline or deviation from the horizontal. A tube or pipe installed in the horizontal plane is said to slope if one end is positioned higher than the other.

sparger: a device used to agitate, oxygenate, or aerate a liquid by means of compressed air or gas.

spatter: the metal particles expelled during welding that do not form part of a weld.

square cut: a tube end cut perpendicular to the tangent plane.

squareness: face-to-face perpendicularity.

star burst: a type of indication created during the reaction of electrochemical etching process on the foreign or refractory material (dross) on the welds or base metal.

steam in place (SIP): the use of steam to sanitize or sterilize a piece of equipment without the use of an autoclave.

sterile: free from living organisms.

sterility: the absence of all life forms.

surface inclusion: particles of foreign material in a metallic matrix. The particles are usually compounds such as oxides, sulfides, or silicates, but may be a substance foreign to and essentially insoluble in the matrix.

surface residual: a foreign substance that adheres to a surface by chemical reaction, adhesion, adsorption, or ionic bonding (for example, corrosion, rouging, and staining).

system volume: total volume of liquid in the system, including equipment, piping, valving, and instrumentation.

transfer panel: a panel to which process and/or utilities are piped that mechanically precludes erroneous cross-connections.

Copyright ASME International
Provided by IHS under license with ASME
No reproduction or networking permitted without license from IHS
Not for Resale

tube: tube is sized by its nominal outside diameter. For bioprocessing equipment, *tube* does not include *pipe*.

tungsten inclusions: tungsten particles transferred into the weld deposit by occasional touching of the tungsten electrode used in the gas tungsten-arc process to the work or to the molten weld metal. These inclusions are often considered defects that must be removed and the weld repaired prior to final acceptance. Tungsten inclusions may be invisible to the unaided eye, but are readily identified in a radiograph.

unacceptable leakage: leakage level above which the system performance is considered unacceptable by the system user and applicable regulating body.

Copyright ASME International
Provided by IHS under license with ASME
No reproduction or networking permitted without license from IHS
Not for Resale

undercut: a groove melted into the base metal adjacent to the weld toe or weld root and left unfilled by weld metal.

underfill: a depression on the weld face or root surface extending below the adjacent surface of the base metal. (See also *concavity*.)

uniformly scattered porosity: porosity that is distributed in a weldment in a uniform pattern.

user: see *owner/user*.

validation: establishing documented evidence that the system does what it purports to do.

waviness: undulations or rippling of the surfaces.

weld joint design: the shape, dimensions, and configuration of the weld joint.

welding operator: one who operates machine or automatic welding equipment.

--`,,`,`-`-`,,`,,`,`,,`---

Copyright ASME International
Provided by IHS under license with ASME
No reproduction or networking permitted without license from IHS Not for Resale

--`,,`,`-`-`,,`,,`,`,,`---

Copyright ASME International
Provided by IHS under license with ASME
No reproduction or networking permitted without license from IHS

Not for Resale

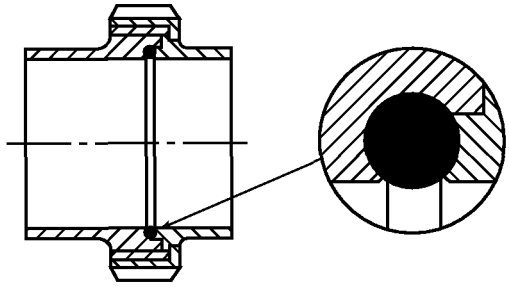

(a) European Hygienic Fitting
(Recommended)

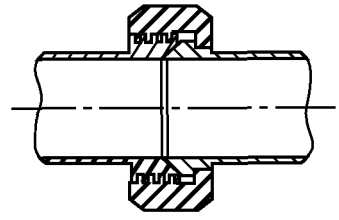

(b) Bevel Seat
(Not Recommended)

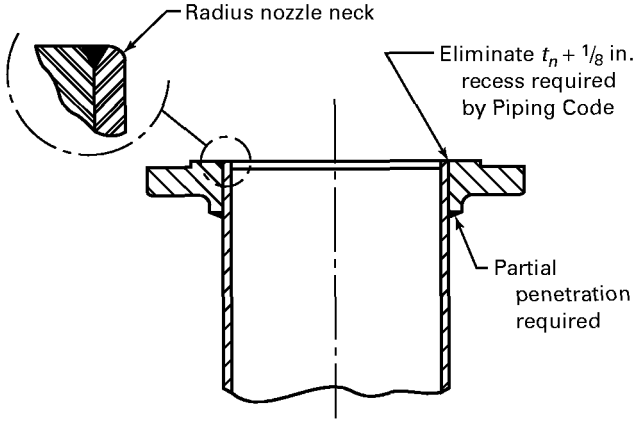

(c) Typical Nozzle Details
Modified Slip-On Flange for Agitators
[Recommended (See Fig. SD-1)]

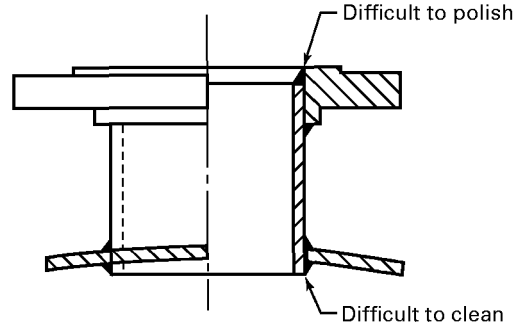

(d) Nozzle Detail
(Not Recommended)

FIG. SD-2 TYPICAL DESIGN OF FITTINGS

(02) SD-3.8 Exterior Design

Equipment located in clean areas is periodically cleaned by wash-down or manually cleaned by wipe-down with harsh cleaning solutions. Such equipment shall conform to the following:

(a) Materials of construction should be corrosion resistant, easily maintained, cleaned, and sanitized without flaking or shedding.

(b) Finishes shall be compatible with the area/room classification as agreed to by the owner/user and manufacturer.

(c) Components shall be capable of being chemically cleaned, steam cleaned, or pressure washed.

(d) All burrs or weld marks shall be removed.

(e) Hinges should be easily removable and/or cleanable.

(f) Equipment mounted on cabinets that are exposed to the environment should be mounted flush.

(g) Skids should have no openings in the frame allowing water retention. Supporting skid frame structures and modules should be constructed from fully sealed tubes or pipes, which are easily cleaned. Frames should have rounded rather than sharp edges.

(h) Motors, gearboxes, and similar equipment should not retain fluids or cleaning solutions on their external surfaces.

(i) Nameplates for tagging equipment should be constructed from corrosion-resistant material such as stainless steel or plastic, and have minimum crevices. The nameplates should be attached and sealed or attached with a corrosion-resistant wire loop.

(j) There should be adequate clearance below or under the equipment for cleaning, and a clearance for discharge should be provided. Elevated equipment under open frames should have a minimum clearance of 6 in. (150 mm) for wash-down and cleaning. In other cases a minimum of 4 in. (100 mm) would be adequate.

Copyright ASME International
Provided by IHS under license with ASME
No reproduction or networking permitted without license from IHS
Not for Resale

(k) Joints and insulation materials shall be sealed and impervious to moisture and cleaning agents.

(l) Electrical cabinets should have a sloped top. Conduit should be polyvinyl chloride (PVC) coated, stainless steel, or easy to clean material. Ventilation panels and ducts should be easily accessible for cleaning.

(m) Painted surfaces should be identified by the fabricator and have the advance approval of the owner/user. All paint systems shall be FDA compliant.

(02) SD-3.9 Containment

The containment level of the system or individual pieces of equipment should be specified by the owner/user.

It will be the responsibility of the owner/user to determine the containment level for the particular type of equipment or system, in accordance with National Institutes of Health (NIH) guidelines and applicable local codes or environmental regulations.

(02) SD-3.10 Miscellaneous Design Details

SD-3.10.1 Grease and other lubricating fluids that are used in gear boxes, drive assemblies, etc., should be contained to prevent leakage of the lubricants or process, either directly or indirectly (e.g., through seepage, seal leaks, etc.).

SD-3.10.2 The equipment manufacturer should specify the type of lubricants that are to be used for maintenance. If the specified lubricant is not accepted by the owner/user, the choice of an alternative should be agreed to by the owner/user and the equipment manufacturer.

SD-3.10.3 The owner/user should give his approval for the lubricants that could come in contact with the product. These lubricants should be identified by name, manufacturer, and grade and shall conform to FDA or other applicable regulatory codes.

(02) SD-3.11 System Design

(a) **SD-3.11.1** Dead legs will be measured by the term *L/D*, where *L* is the leg extension from the ID wall normal to the flow pattern or direction, and *D* is the ID of the extension or leg of a tubing fitting or the nominal dimension of a valve or instrument. For valves, *L* shall be measured to the seal point of the valve. Tables SD-1 and SD-5 indicate *L/D* values based on the BPE definition for various tubing geometries and configurations. If a branch from a primary pipeline has demonstrated flow during cleaning and sterilization, it does not constitute a dead leg.

For high-purity water and clean steam systems, an *L/D* ratio of 2:1 is attainable with today's manufacturing and design technology. For other bioprocessing systems, such as purification, filtration, and fermentation having cluster, block, and multi-port valves, an *L/D* of 2:1 is achievable. However, it may not be achievable with certain equipment and process configurations as they are currently manufactured. For this part, an *L/D* of 2:1 or less shall be considered a target ratio, and shall not be construed to be an absolute requirement. The system designer and manufacturer shall make every attempt to eliminate system dead legs. It will be the responsibility of the system manufacturer or designer to identify where exceptions exist or where the target ratio of 2:1 cannot be met.

The target ratio may not be achievable for weir-type valves clamped to tees and certain sizes of close welded Point-of-Use valves, as shown in Figs. SD-4(a) and (d). For the header and valve size combinations where the target value cannot be met using these configurations, a specific isolation valve design, as shown in Figs. SD-4(b) and (c), may be required to achieve the target ratio.

SD-3.11.2 Pipe and tube systems should be drainable or self-draining, and pitched to a draining point. For systems where it may not be feasible to drain to a low point, the system shall be capable of being flushed.

SD-3.11.3 The support systems for tubes and pipes shall maintain the required pitch and alignment under all operating conditions taking into account thermal cycling, contractions, distortion, settling, etc. Pipes and tubes should be pitched in a manner that minimizes the number of low drain points.

SD-3.11.4 Product hold-up volume in the system should be minimized.

SD-3.11.5 Bioprocessing piping and tubing design should have routing and location priority over process and mechanical support systems.

SD-3.11.6 Piping and connections to in-line valves should be of all-welded construction where feasible, practical, and agreed to by the owner/user and manufacturer. To ensure the highest degree of hygienic design, the piping systems should utilize welded connections except where make-break connections are necessary.

SD-3.11.7 The flow balance between the spray devices in a multiple spray arrangement should be maintained to ensure meeting the specified cleaning

Copyright ASME International
Provided by IHS under license with ASME
No reproduction or networking permitted without license from IHS
Not for Resale

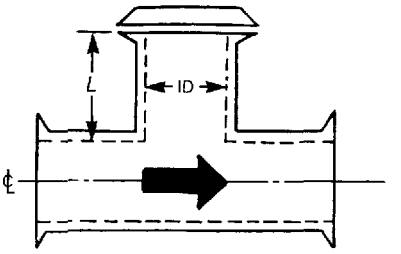

TABLE SD-1 *L/D* DIMENSIONS FOR FLOW-THROUGH TEE: FULL-SIZE STANDARD STRAIGHT TEE WITH BLIND CAP (a)

Nominal Size, in.	Wall Thickness	ID (*D*)	Dead Leg, *L*	*L/D* (Dead Leg)
1/4	0.035	0.180	2.16	12.00
3/8	0.035	0.305	2.10	6.88
1/2	0.065	0.370	2.07	5.58
3/4	0.065	0.620	2.07	3.33
1	0.065	0.870	2.19	2.52
1 1/2	0.065	1.370	2.14	1.56
2	0.065	1.870	2.44	1.30
2 1/2	0.065	2.370	2.44	1.03
3	0.065	2.870	2.44	0.85
4	0.083	3.834	2.83	0.74
6	0.109	5.782	4.24	0.73

criteria. Pipe sizes should be specified to guarantee adequate supply and pressure to the spray devices.

SD-3.11.8 Pipeline should be fully flooded and ensure turbulent flow during cleaning.

SD-3.11.9 Routing of piping should be as direct and short as possible to ensure a minimal quantity of CIP solution to fill a circuit, and eliminate excessive piping and fittings.

SD-3.11.10 Cross contamination of product streams shall be physically prevented. Methods of separation used in industry are:

(a) removable spool piece;

(b) U-bend transfer panel;

(c) double block-and-bleed valve system (see Fig. SD-5); and

(d) mix-proof valving.

SD-3.11.11 The use of fluid bypass piping (around traps, control valves, etc.) is not recommended.

SD-3.11.12 The use of redundant in-line equipment is not recommended due to the potential creation of dead legs. When equipment is expected to be regularly maintained, the system should be designed for ease of disassembly and reassembly.

SD-3.11.13 The use of check valves for hygienic process piping systems requires caution and is not recommended.

SD-3.11.14 Orifice plates, when required and used in hygienic piping systems, shall be installed in a drainable position.

SD-3.11.15 Eccentric reducers shall be used in horizontal piping to eliminate pockets in the system. See the upper sketch for Table DT-26 for the proper orientation.

SD-3.11.16 The system shall be designed to eliminate air pockets, and prevent or minimize air entrainment.

SD-3.11.17 The centerline radius of bent tubes should be not less than 2.5 times the nominal tube diameter to prevent the deterioration of interior surfaces, (wrinkling, striations, and potential cracking). Tighter bends may be used with the approval of the owner/user

Copyright ASME International
Provided by IHS under license with ASME
No reproduction or networking permitted without license from IHS
Not for Resale

(02)
(a)

TABLE SD-2

DELETED

when appropriate inspection techniques and procedures (borescope, sectioning, etc.) are used.

SD-3.11.18 Ball valves are not recommended in fluid hygienic piping systems. See SD-4.11.2(b) for further comments.

SD-3.11.19 Plate and frame type heat exchangers should be used only by agreement between owner and designer due to the difficulty of CIP and SIP.

(02) SD-3.12 Drainability

SD-3.12.1 Using gravity is the most effective way for draining systems. To achieve drainability, lines should be pitched in a specific direction and at a specific slope. The pitch should be continuous from the highest point to the designated drain point. Product lines are generally pitched in the direction of product flow.

Preferred (minimum) piping/tubing slopes are as follows:

(a) Short Runs, Field Installed. 1/4 in./ft (21 mm/m or approximately 2%)

(b) Long Runs, Field Installed. 1/8 in. to 1/16 in./ft (10.4 to 5.2 mm/m or approximately 1 to 0.5%)

(c) Skidded Runs. 1/4 in./ft (21 mm/m or approximately 2%)

(d) Transfer Panels. 1/4 in. or 1/16 in./ft (21 to 5.2 mm/m or approximately 2 to 0.5%).

SD-3.12.2 Piping and equipment should be installed with designated drain points to maximize self-draining properties. The number of drain points should be minimized. The equipment manufacturer shall indicate the

Copyright ASME International
Provided by IHS under license with ASME
No reproduction or networking permitted without license from IHS
Not for Resale

TABLE SD-3 (02) (a)

DELETED

Copyright ASME International
Provided by IHS under license with ASME
No reproduction or networking permitted without license from IHS Not for Resale

proper orientation to optimize drainability. The installer and user shall ensure that proper orientation is achieved.

SD-3.12.3 Long runs (as defined by the owner/end user and manufacturer) for supply and return CIP lines should be pitched away from the spray device, and back toward the CIP supply point at not less than $^{1}/_{16}$ in./ft (5 mm/m or approximately 0.5%).

SD-3.12.4 Lines connected to pumps should have a continuous pitch toward the pump.

SD-3.12.5 Systems or equipment that are not self-draining should be flushable (see Fig. SD-6).

(02)
(a)

TABLE SD-4

DELETED

SD-4 SPECIFIC GUIDELINES

SD-4.1 Instrumentation (02)

SD-4.1.1 General

(a) Liquid filled elements in measuring devices should not contain materials that are harmful to the product.

(b) Gage siphons (pigtails) should not be used. The number of isolation valves should be minimized.

(c) All instruments, valves, and in-line devices where appropriate should be permanently marked for proper installation (e.g., flow direction, orientation, etc.).

(d) Measurement elements should be designed in a way that a failure will not cause contamination hazards to the process and environment.

(e) The internal volume of the instrument's sensing element should be minimized.

(f) Instruments should have integral hygienic fittings. Threaded ferrules are not acceptable to convert standard instrumentation to hygienic standards.

SD-4.1.2 Relief Devices

(a) Rupture discs on pressure vessels should be installed as close as possible to the system's highest point.

(b) The cleaning system design shall ensure that the rupture disc will not be damaged by cleaning media impact.

(c) Rupture disc installation should comply with the *L/D* ratios mentioned in SD-3.11.1.

(d) Discharge piping should comply with the appropriate code.

SD-4.1.3 Liquid Pressure Regulators

(a) Regulators should be installed to be fully drainable through the outlet and/or inlet ports.

(b) There shall be no voids or crevices within the area wetted by the fluid. Regulator designs, where a portion of the valve stem penetrates the sensing diaphragm, shall be avoided unless provisions are made to avoid entrapment of foreign matter and any leakage through the interface between stem and diaphragm, especially after steam sterilization.

(c) Due to the inherent design characteristics of self-contained regulators, manual means of override may be required to allow full cleanability and drainability.

Copyright ASME International
Provided by IHS under license with ASME
No reproduction or networking permitted without license from IHS
Not for Resale

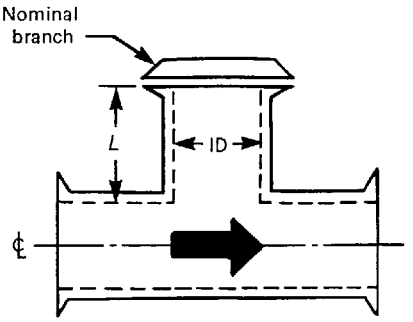

TABLE SD-5 *L/D* DIMENSIONS FOR FLOW-THROUGH TEE: SHORT OUTLET REDUCING TEE WITH BLIND CAP (02) (a)

Nominal Size Tee, in.	Nominal Branch Size, in.	Tee Wall Thickness	Branch Wall Thickness	Branch ID (*D*)	Dead Leg, *L*	*L/D* (Dead Leg)
3/8	1/4	0.035	0.035	0.180	0.85	4.71
1/2	1/4	0.065	0.035	0.180	0.82	4.53
1/2	3/8	0.065	0.035	0.305	0.82	2.67
3/4	1/4	0.065	0.035	0.180	0.69	3.83
3/4	3/8	0.065	0.035	0.305	0.69	2.26
3/4	1/2	0.065	0.065	0.370	0.69	1.86
1	1/4	0.065	0.035	0.180	0.69	3.83
1	3/8	0.065	0.035	0.305	0.69	2.26
1	1/2	0.065	0.065	0.370	0.69	1.86
1	3/4	0.065	0.065	0.620	0.69	1.11
1 1/2	1/4	0.065	0.035	0.180	0.69	3.83
1 1/2	3/8	0.065	0.035	0.305	0.69	2.26
1 1/2	1/2	0.065	0.065	0.370	0.69	1.88
1 1/2	3/4	0.065	0.065	0.620	0.69	1.11
1 1/2	1	0.065	0.065	0.870	0.69	0.79
2	1/4	0.065	0.035	0.180	0.69	3.83
2	3/8	0.065	0.035	0.305	0.69	2.26
2	1/2	0.065	0.065	0.370	0.69	1.86
2	3/4	0.065	0.065	0.620	0.69	1.11
2	1	0.065	0.065	0.870	0.69	0.79
2	1 1/2	0.065	0.065	1.370	0.69	0.50
2 1/2	1/4	0.065	0.035	0.180	0.69	3.83
2 1/2	3/8	0.065	0.035	0.305	0.69	2.26
2 1/2	1/2	0.065	0.065	0.370	0.69	1.86
2 1/2	3/4	0.065	0.065	0.620	0.69	1.11
2 1/2	1	0.065	0.065	0.870	0.69	0.79
2 1/2	1 1/2	0.065	0.065	1.370	0.69	0.50
2 1/2	2	0.065	0.065	1.870	0.69	0.37
3	1/4	0.065	0.035	0.180	0.69	3.83
3	3/8	0.065	0.035	0.305	0.69	2.26
3	1/2	0.065	0.065	0.370	0.69	1.86
3	3/4	0.065	0.065	0.620	0.69	1.11
3	1	0.065	0.065	0.870	0.69	0.79

(continued)

Copyright ASME International
Provided by IHS under license with ASME
No reproduction or networking permitted without license from IHS
Not for Resale

(02) (a) **TABLE SD-5 *L/D* DIMENSIONS FOR FLOW-THROUGH TEE: SHORT OUTLET REDUCING TEE WITH BLIND CAP (CONT'D)**

Nominal Size Tee, in.	Nominal Branch Size, in.	Tee Wall Thickness	Branch Wall Thickness	Branch ID (*D*)	Dead Leg, *L*	*L/D* (Dead Leg)
3	1½	0.065	0.065	1.370	0.69	0.50
3	2	0.065	0.065	1.870	0.69	0.37
3	2½	0.065	0.065	2.370	0.69	0.29
4	¼	0.083	0.035	0.180	0.71	3.93
4	⅜	0.083	0.035	0.305	0.71	2.32
4	½	0.083	0.065	0.370	0.71	1.91
4	¾	0.083	0.065	0.620	0.71	1.14
4	1	0.083	0.065	0.870	0.71	0.81
4	1½	0.083	0.065	1.370	0.71	0.52
4	2	0.083	0.065	1.870	0.71	0.38
4	2½	0.083	0.065	2.370	0.71	0.30
4	3	0.083	0.065	2.870	0.71	0.25
6	¼	0.109	0.035	0.180	0.86	4.77
6	⅜	0.109	0.035	0.305	0.86	2.82
6	½	0.109	0.065	0.370	0.86	2.32
6	¾	0.109	0.065	0.620	0.86	1.39
6	1	0.109	0.065	0.870	0.86	0.99
6	1½	0.109	0.065	1.370	0.86	0.63
6	2	0.109	0.065	1.870	0.86	0.46
6	2½	0.109	0.065	2.370	0.86	0.36
6	3	0.109	0.065	2.870	0.86	0.30
6	4	0.109	0.083	3.834	0.86	0.22

SD-4.2 Specialty Hoses

(02) **SD-4.2.1** Flexible hygienic hoses should typically be designed so that there are no low points or sagging of the hoses. It is preferable to slope the lines at 30 deg or 45 deg to prevent sagging problems, especially if the hoses are connected to a piece of equipment on load cells (see Fig. SD-7).

SD-4.2.2 Flexible hose fitting ID shall match the ID of the mating fitting. The ID of flexible hoses should be a smooth bore design.

(02) SD-4.3 Centrifuges

SD-4.3.1 General

(a) Centrifuges designed for CIP and SIP should have all product contact surfaces accessible to the CIP and SIP fluids, and be accessible for inspection.

(b) Centrifuges that are not designed for CIP or SIP should be easily disassembled and reassembled for cleaning and inspection.

(c) The owner/user should inform the manufacturer of the fluids and methods to be used for cleaning and sterilizing (e.g., sterilized by autoclaving).

(d) All crevices and corners, etc., should be accessible for visual inspection and cleaning.

(e) Hexagon socket head cap screws shall not be used if they are in contact with the product.

(f) No exposed lubricated bearings shall be allowed in product contact zones.

(g) The centrifuge manufacturer should minimize all unwanted areas where solids may accumulate. These should include threads, gaps between parts, crevices, etc. The centrifuge manufacturer should identify all areas of primary and incidental product contact that require manual cleaning in addition to CIP.

SD-4.3.2 Internal Surface Finishes (Process Contact/Wetted Surfaces)

(a) Surface finish specifications should comply with Parts SF and MJ of this Standard.

(b) The owner/user and manufacturer should agree on the required finishes for the various parts. The surface finish of machined components or parts should be specified by the manufacturer and agreed upon by the owner/user.

(c) Provisions should be made for inspection prior to assembly into larger assemblies of subcomponents

Copyright ASME International
Provided by IHS under license with ASME
No reproduction or networking permitted without license from IHS
Not for Resale

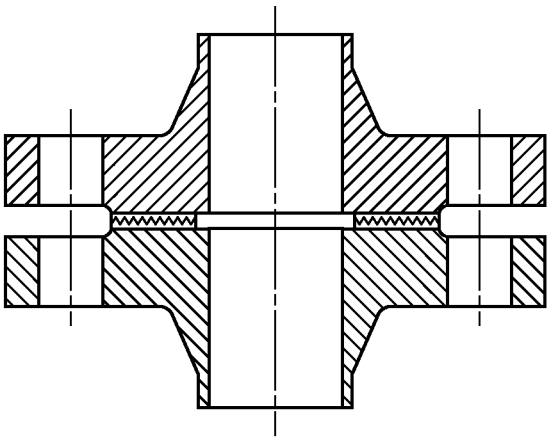

(a) Not Recommended

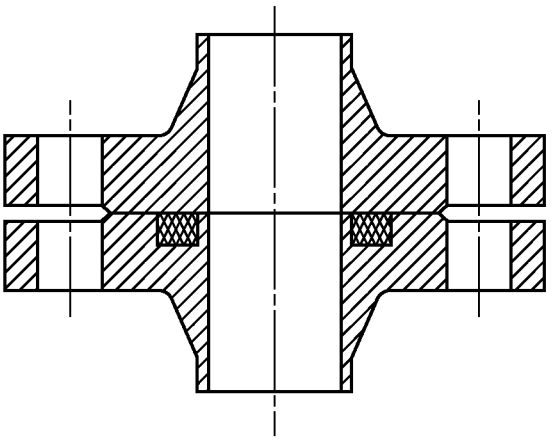

(b) Not Recommended
(Has Been Acceptable in Certain Applications)

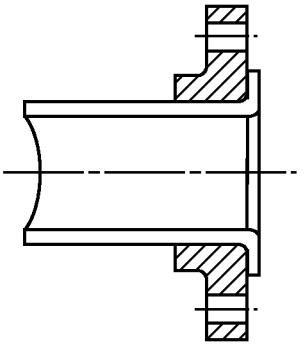

(c) Stub-End/Lap Joint
(Not Recommended)

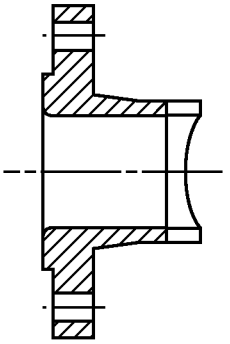

(d) Weld Neck
(Not Recommended)

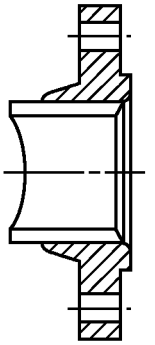

(e) Slip On
(Not Recommended)

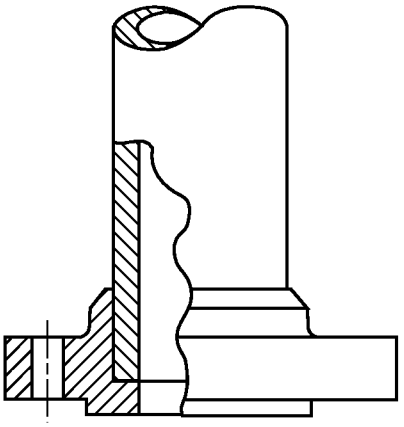

(f) Socket Welding Flanges
(Not Recommended)

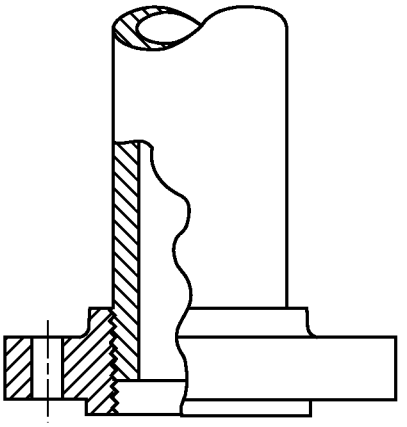

(g) Threaded Flanges
(Not Recommended)

FIG. SD-3 FLAT GASKET APPLICATIONS (02)
(a)

Copyright ASME International
Provided by IHS under license with ASME
No reproduction or networking permitted without license from IHS Not for Resale

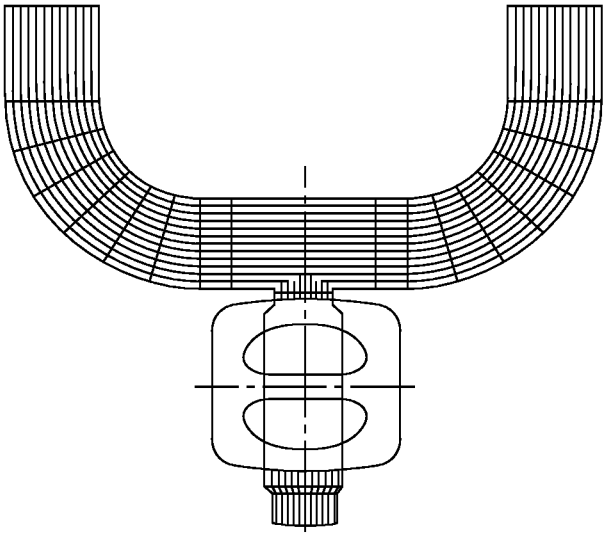

(a) Recommended
(with 2.0 Target *L*/*D*)

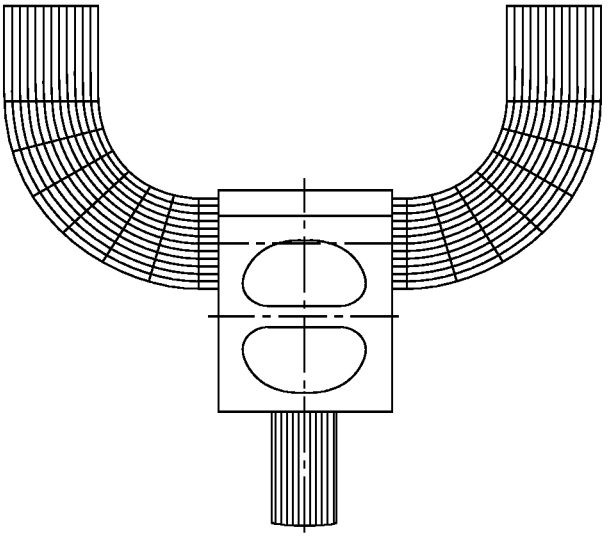

(b) Preferred

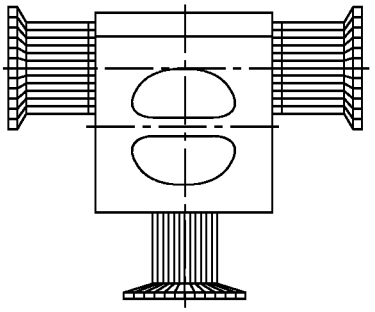

(c) Preferred

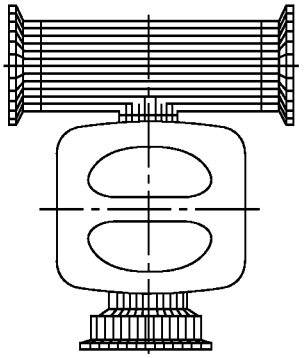

(d) Recommended

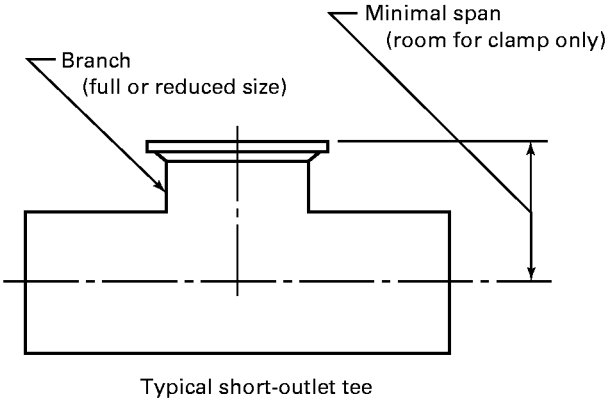

Typical short-outlet tee

(e) Recommended

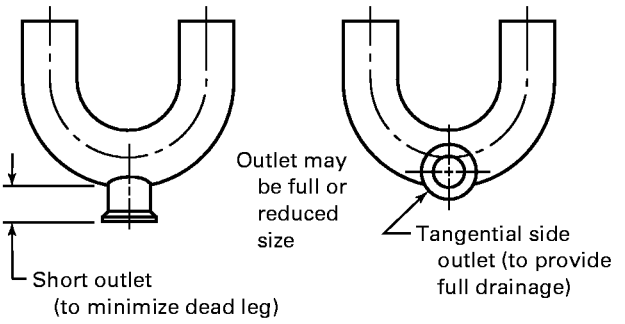

(f) Recommended (g) Preferred

(02) **FIG. SD-4 RECOMMENDED AND PREFERRED DROP DESIGNS**

Copyright ASME International
Provided by IHS under license with ASME
No reproduction or networking permitted without license from IHS Not for Resale

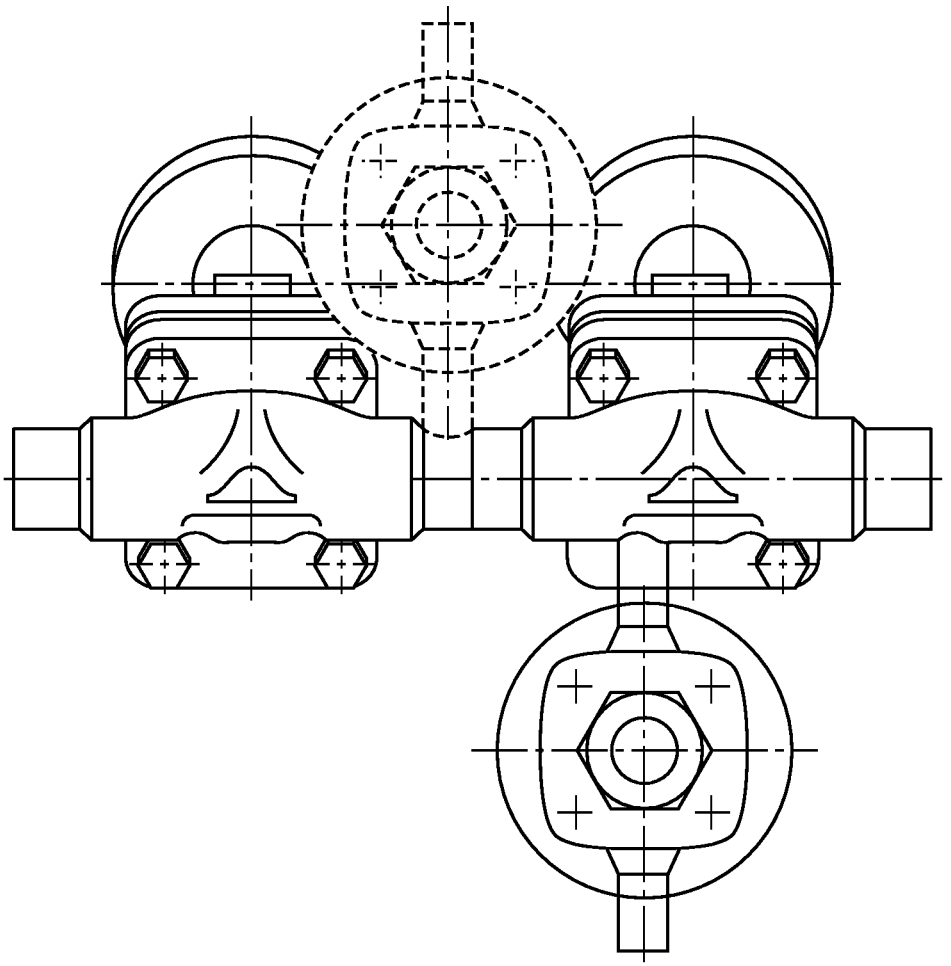

FIG. SD-5 DOUBLE BLOCK-AND-BLEED VALVE ASSEMBLY

and parts. Provisions shall be made to enhance the cleanability of the machined surface by use of sloping, draining, electropolishing of surface, or other means.

(02) SD-4.4 Filtration Equipment

(a) All wetted surfaces should be accessible for cleaning and inspection.

(b) The filter housing shall be designed to allow for complete venting and draining. Liquid tee-type filter housings should be installed vertically and vent type in-line filter housings should be installed vertically with the condensate/drain port directed downward (see Fig. SD-8).

(c) All nozzle connections should be of a hygienic design.

(d) Baffle plates, when used should be cleanable and sterilizable.

(e) The housing assembly, tube-sheets, end plates, and connections should be designed to prevent bypassing of the product around the element.

(f) Parts forming internal crevices should be easily disassembled to enable access for cleaning.

(g) Vent filters for hot process services should be heat traced or steam jacketed. Other methods for preventing moisture accumulation in vent filters, such as vent heaters or condensers, could be considered.

SD-4.5 Pumps (02)

SD-4.5.1 General

(a) Pumps shall be capable of being cleaned in place (CIP).

(b) Provision shall also be made in the design to allow for clean out of place (COP) when required.

(c) Pumps shall be capable of being sterilized in (a)

Copyright ASME International
Provided by IHS under license with ASME
No reproduction or networking permitted without license from IHS
Not for Resale

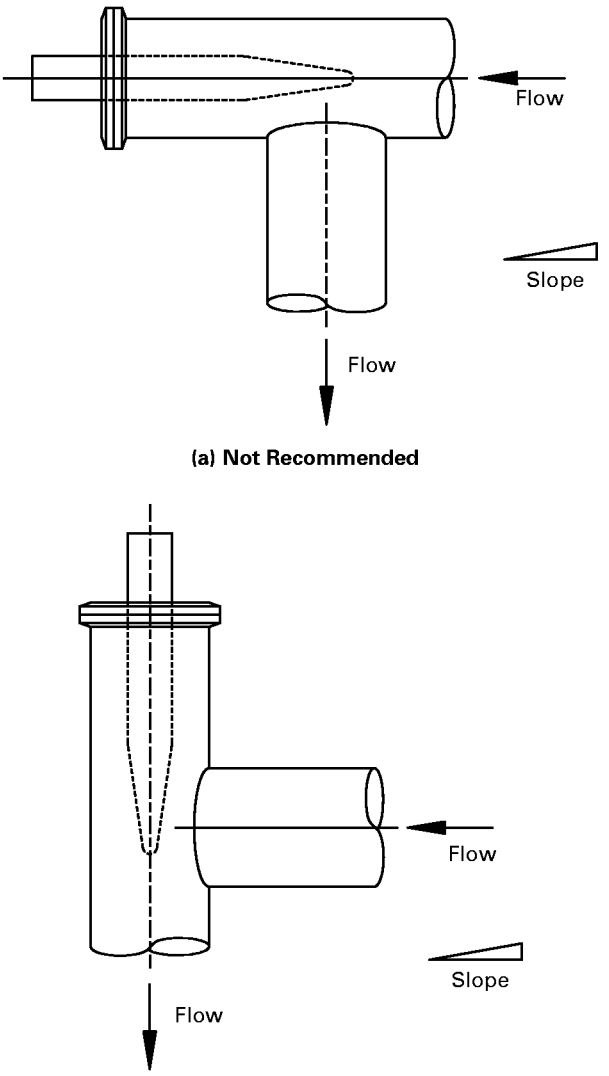

(a) FIG. SD-6 INSTRUMENT LOCATION DETAIL: HYGIENIC DESIGN

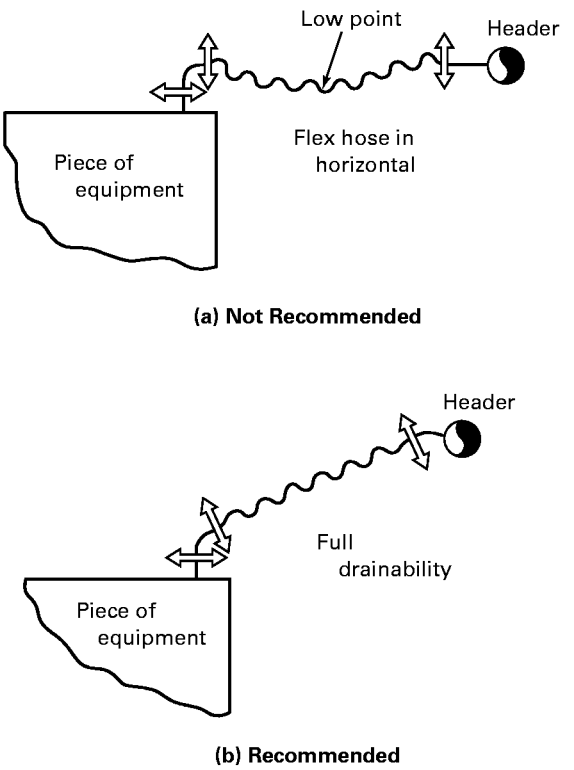

FIG. SD-7 FLEXIBLE HYGIENIC HOSE DESIGN

place (SIP) when agreed to between owner/user and manufacturer.

SD-4.5.2 Hygienic Centrifugal Pumps

(a) Suction, discharge, and casing drain connections should be an integral part of the pump casing. Welded inserts should be back-welded.

(b) All connections to the pump, including mechanical seal recirculation flush, drains, vents, and process connections shall be of an acceptable hygienic design.

(c) Casing drains shall be at the lowest point of the casing, to ensure full drainage. They should be both horizontal and parallel to the pump centerline or perpendicular to the casing's tangent at a predetermined downward angle.

(d) The use of an elbow type casing drain is not recommended. When possible, the casing drain connection should project a minimum distance, approaching the target *L/D* ratio of 2:1.

(e) Diaphragm valves are preferred for casing drains.

(f) Pump discharge connection should be tilted at 45 deg or the appropriate angle, where practical, to allow for full venting of the casing, when agreed to by the owner/user.

(g) Impeller drive pins, set screws, rotor pins, etc., shall be designed to minimize crevices, holes, etc., on product contact surfaces, where practical.

(h) Pump casings shall be designed with minimum hold-up volume.

(i) All pump seals shall be designed to prevent contamination of the process fluid, consistent with the process requirements of that fluid.

(j) Shrouded impellers should not be used unless approved by all parties, since they cannot be cleaned in place.

Copyright ASME International
Provided by IHS under license with ASME
No reproduction or networking permitted without license from IHS
Not for Resale

SD-4.5.3 Hygienic Positive Displacement Pumps

(a) When possible, positive displacement pumps should be configured with vertically mounted inlets and outlets to promote drainability and venting.

(b) When using internal bypass pressure relief devices, they should be of a hygienic design. It is preferred that an external, piping mounted relief device (hygienic rupture disc) rather than a pump mounted bypass be used.

SD-4.6 Process (Hygienic) Valves

(02) SD-4.6.1 General: Valves

(a) Process flow valves (e.g., diaphragm valves) should be of a body and port design so that the body will optimize drainability when properly installed. All hygienic valves should be welded into the process line.

(b) Valve surfaces that may become product contact surfaces if a component (e.g., diaphragm) fails in service shall be readily accessible for inspection, maintenance, and cleaning.

(c) Tee-body and cross-body sanitary valves shall be positioned to ensure that the valve body will optimize drainability when installed in a piping system.

(d) Isolation and block valves, which are located on bosses or tees, should be installed close-coupled to reduce or eliminate dead legs. (When the stem of a three-port valve moves from one position to the other such that all ports are connected for a brief period of time, this will cause mixing at first and then a resultant dead-end in the previous path while the current path is in use.) If this is not acceptable, two shut-off valves may be used instead.

(e) Multiport divert valves shall be installed to optimize drainability.

(f) The internal volume of the valve should be kept to a minimum.

(g) All cavities shall be easily accessible for cleaning by CIP fluids and SIP steam, and shall be designed to optimize drainability.

(h) Any crevices, void volumes, and/or gaps between mating parts should be minimized.

(i) Any guiding of valve trim and operating mechanisms shall be minimized in areas in contact with bioprocessing fluids.

(j) All valves shall be capable of being fully opened or exposed during CIP.

(k) A secondary stem seal should be fitted with a telltale connection between the primary and secondary stem seal to indicate primary seal leakage.

SD-4.6.2 Diaphragm Valves (02)

(a) Diaphragm-type valves are specifically preferred for bioprocessing fluid applications.

(b) Valves will be designed so that complete drainage of fluid from inlet to outlet is optimized when mounted in the position specified by the manufacturer. Drain marks permanently marked on both sides of the valve body will show the correct mounting position to optimize drainability.

(c) Valve design will eliminate entrapment zones within the valve fluid cavity.

SD-4.6.3 Stem Seal Valves. Valve seals should comply with Part SG of this Standard. (02)

SD-4.7 Vessels, Tanks, Bioreactors, Fermenters, and Columns (02)

SD-4.7.1 General (a)

(a) This section defines the minimum requirements that are to be met in the design, fabrication, and supply of biopharmaceutical vessels, tanks, bioreactors, fermenters, and columns. This section will refer to all of the above as vessels whether they are pressurized or not.

(b) Design and fabrication of vessels and internal parts shall ensure that surfaces are free of ledges, crevices, pockets, and other surface irregularities. If more restrictive tolerances are required, they shall be included as part of the fabrication specifications for the project.

(c) All heat transfer surfaces should be drainable and ventable.

(d) Breastplates, reinforcing pads, doubler plates, poison pads, etc., which are required for welding dissimilar material to the vessel should be of the same material as the vessel. No telltale holes are allowed on product contact surfaces and those, which are outside, should be cleanable.

(e) Vessels that are to handle above 176°F (80°C) (e.g., SIP, hot Water-for-Injection [WFI], hot US Pharmacopoeia [USP] waters, and hot CIP solutions) should be designed for full vacuum service.

(f) Top and bottom heads on vessels should be free-draining. Dished heads such as ASME flanged and dished (F&D), elliptical, and hemispherical are the usual choice; however, flat and conical heads should slope at not less than $\frac{1}{8}$ in./ft (20 mm/m) to a common drain point.

(g) All internal surfaces should be sloped or pitched for drainability.

(h) Test protocols for drainability should be agreed upon in advance, by all the parties (see SD-5.4). All vessels should be checked for drainability during fabrication.

Copyright ASME International
Provided by IHS under license with ASME
No reproduction or networking permitted without license from IHS
Not for Resale

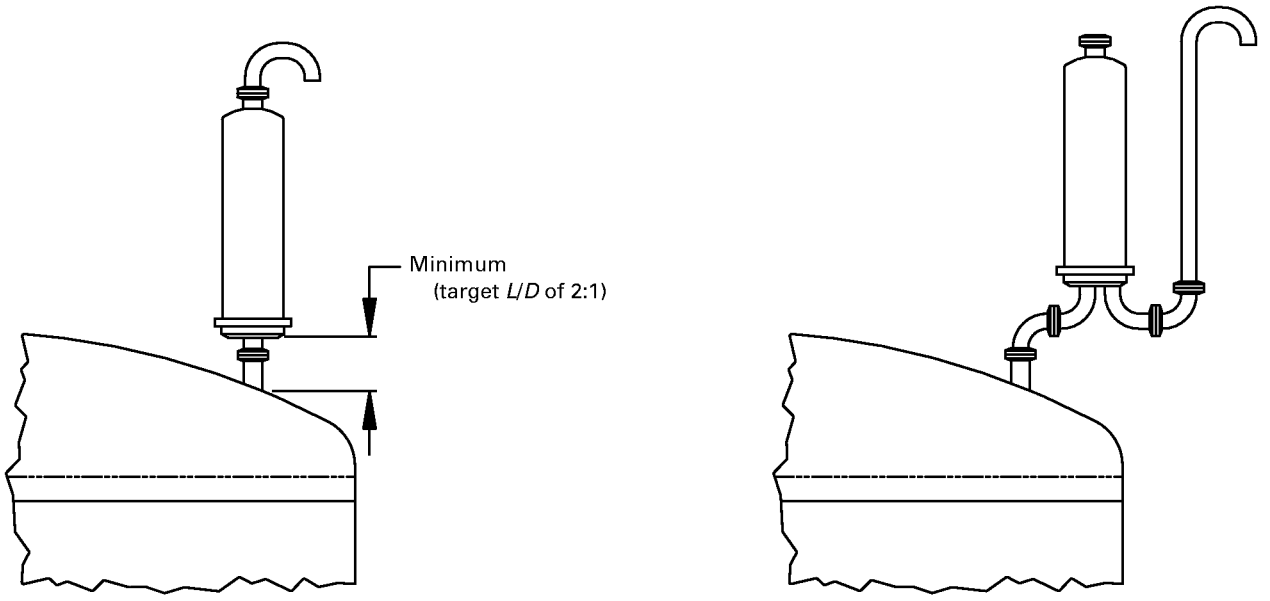

(a) In-Line Hygienic Design (Preferred)

(b) T-Type Less Hygienic Design (Recommended)

(a)

FIG. SD-8 TANK/VESSEL VENT FILTERS

SD-4.7.2 Vessel Openings

(a) Nozzles that are designed to be cleaned by a spray device should have the smallest *L/D* ratio possible. For non-flow through nozzles, the *L/D* ratio should not exceed 2:1 (see Fig. SD-9).

(b) Bottom mounted agitators, pads, etc., should not interfere with the drainability of the vessel.

(c) All instrument probes and any side wall penetrations shall be sloped for drainage, unless the instruments used require horizontal mounting (see Fig. SD-10).

(d) Blank covers should have the same finish as the vessel internals.

(e) Drain valves should optimize drainability and minimize dead legs.

(f) All CIP devices should be drainable and self-cleaning.

(g) The location and number of spray devices should be chosen to eliminate shadowing at internal parts such as mixer shafts, dip tubes, and baffles.

(h) Sparger and dip tubes should have an adequate number of drainage holes to ensure full drainage.

(i) The number of shell side nozzles and connections should be minimized.

(j) Manways on the side shell of a vessel shall be installed only by agreement of the owner/user. If side shell manways are required, they should be sloped for drainage.

(k) Sample valves should be designed for CIP and SIP. Sample valves, located on vessels shall be of a hygienic design, either flush with the inside wall of the vessel or with a TARGET *L/D* ratio of 2:1.

(l) Sample valves should not be located on bottom heads.

(m) Nozzles with a dip tube mounted in a nozzle neck should have a minimum annular space of 1 in. (25 mm) with a TARGET *L/A* ratio of 2:1. In all cases sufficient annular space to allow access for CIP coverage (see Fig. SD-11) shall be provided.

(n) As required by the process, inlet nozzles tangential to the vessel surface may be used (see Fig. SD-12).

(o) Nozzle connections less than 1 in. (25 mm) in diameter are not recommended unless agreed by the owner/user and manufacturer.

(p) Sight glasses should be located on the vessel head within 80% of the vessel dish radius, to avoid the knuckle radius. It is not recommended to mount the sight glasses on the vessel manways due to the potential problems with access for CIP (see Fig. SD-13). Sight glasses on vessels should be designed with

Copyright ASME International
Provided by IHS under license with ASME
No reproduction or networking permitted without license from IHS
Not for Resale

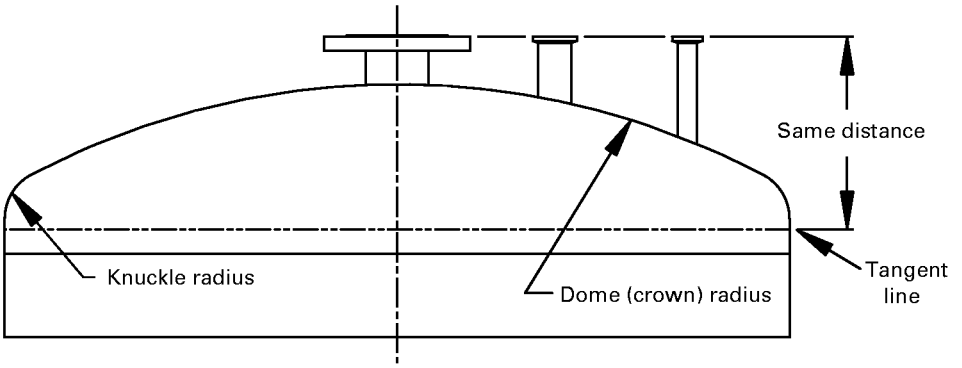

GENERAL NOTES:
(a) Potential problems with CIP and SIP with capped connections
(b) Dead space: stagnant areas

(a) Not Recommended

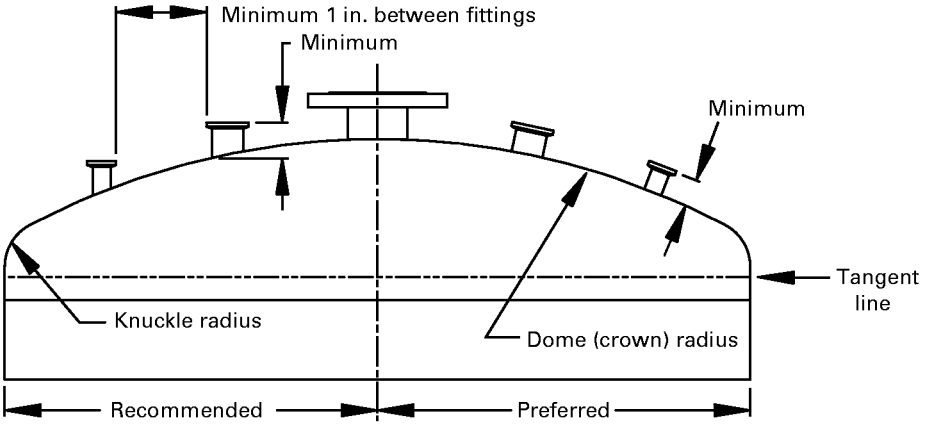

GENERAL NOTES:
(a) Less dead space
(b) Better CIP/SIP capabilities

(b) Allow for Clamps/Bolt-Up (Target *L*/*D* of 2:1)

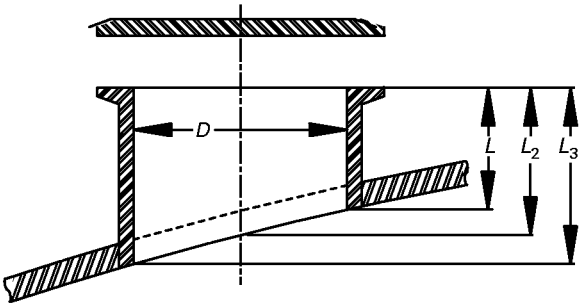

GENERAL NOTES:
(a) All *L*/*D* ratios to be calculated on long-side dimensions for vessel heads
(b) *D* = inside diameter

(c) *L*/*D* = L_3/*D* (Target 2:1)

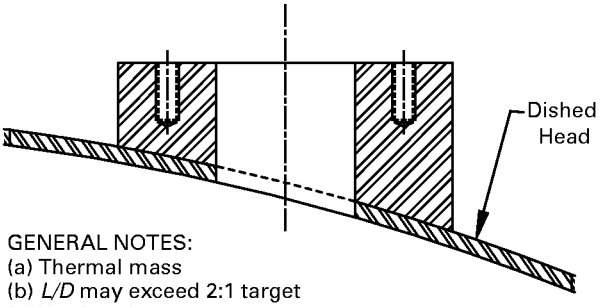

GENERAL NOTES:
(a) Thermal mass
(b) *L*/*D* may exceed 2:1 target
(c) Hard to clean
(d) Sharp edge at internal corner
(e) Possible crack site at internal corner

(d) Instrument Connection Vessel (Not Recommended)

FIG. SD-9 NOZZLE DESIGN (a)

Copyright ASME International
Provided by IHS under license with ASME
No reproduction or networking permitted without license from IHS Not for Resale

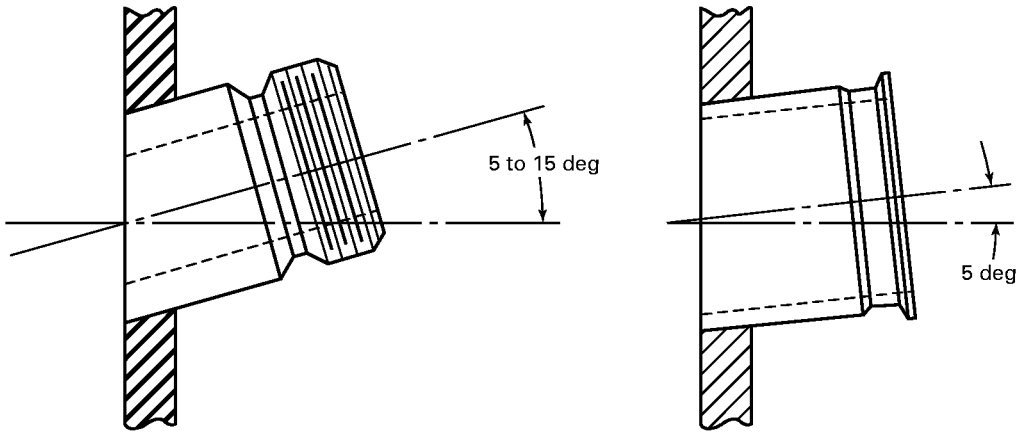

(a) Recommended (b) Recommended

FIG. SD-10 SIDEWALL INSTRUMENT PORTS

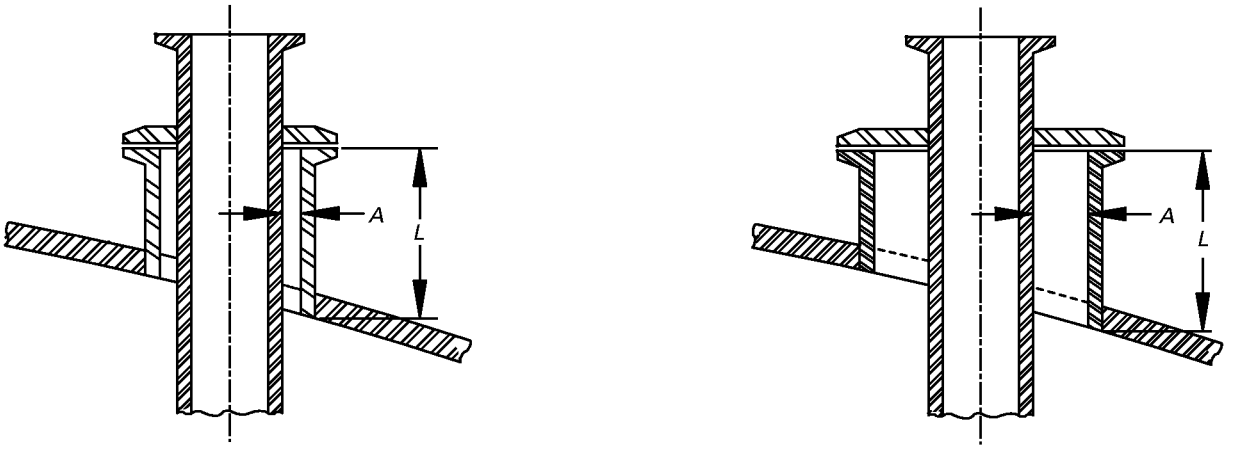

GENERAL NOTES:
(a) Potential problems with CIP and SIP
(b) Dead space: stagnant areas

(a) Not Recommended

GENERAL NOTES:
(a) Less dead space
(b) Better CIP/SIP capabilities
(c) *L*/*A* target of 2:1 more easily obtained

(b) Acceptable: Better Design

(a)

FIG. SD-11 DIP TUBE

the smallest *L*/*D* ratio possible, and incorporate cleanable O-ring designs when applicable (see Fig. SD-16).

(q) Sparger and dip tubes should be designed in accordance with SD-4.7.1, incorporate a low point drain hole, and be supported to maintain drainability (see Fig. SD-15).

(r) Manway covers should be dished rather than a flat design.

(s) Flanges that have metal-to-metal contact on the product side are difficult to CIP and SIP. These flanges should be eliminated, if possible. See Fig. SD-15 for possible designs that minimize the crevice on the internal sidewall of the vessel.

(t) All side-shell and vessel head nozzles should be flush with the interior of the vessel. (See Fig. SD-19.) Additional ports may require a minimum projection to ensure additives are directed into the vessel fluid.

SD-4.7.3 Internal Components

(a) When expansion joints are used internally, the surface in contact with the process fluids shall have open convolutes without guides as the preferred design.

Copyright ASME International
Provided by IHS under license with ASME
No reproduction or networking permitted without license from IHS Not for Resale

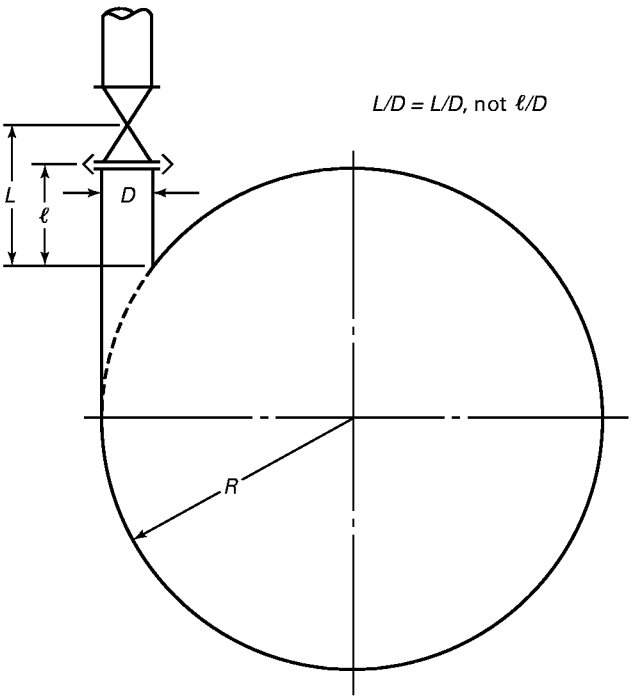

Definition of *L/D* for Tangential Inlet: Top View

FIG. SD-12 VESSEL DESIGN TANGENTIAL NOZZLES

(b) Internal support members shall be solid, rather than hollow, which have a higher risk of fatigue and contamination problems (see Fig. SD-17).

(c) Mitered fittings for internal pipe work should only be fitted with the prior agreement between the owner/user and manufacturer. When mitered joints are used, they shall be designed and fabricated in accordance with the appropriate codes (see Fig. SD-18).

(d) Vessels shall drain to a common point and shall not have multiple draining points, unless agreed to between the owner/user and manufacturer.

(e) The number of components inside the vessel should be minimized to ensure the proper drainability and cleanability of the vessel, and when used, if possible, should be supported by a solid support structure.

SD-4.7.4 Fabrication

(a) Butt welds should be used, if possible, minimizing lap joint welds and eliminating stitch welding.

(b) Flanges are not recommended, and their use shall be minimized. The bore of weld neck flanges shall be the same as the ID of the connected pipe or tubing to prevent ledges and nondrainable areas.

(c) Where it is inevitable and class 150 slip-on flanges are used, the bore side bevel weld should be designed in a way to eliminate potential CIP difficulties.

(d) During handling and transportation, vessels and their parts and piping assemblies shall be suitably protected to prevent damage to polished surfaces.

SD-4.7.5 Finishes (a)

(a) Surface finishes shall be specified and measured as required by Part SF. Surface finish coupons shall be submitted when agreed to by the owner/user and manufacturer.

(b) Interior surface finish specifications shall pertain to all the wetted or potentially wetted surfaces (e.g., vapor space, nozzle necks, agitators, thermowells, dip tubes, baffles, etc.).

(c) The polishing of a connection face, body flange, etc., shall extend up to the first seal point.

Copyright ASME International
Provided by IHS under license with ASME
No reproduction or networking permitted without license from IHS
Not for Resale

SD-4.8 Agitators and Mixers

(02) SD-4.8.1 General

(a) Agitators and mixers with their associated components shall be accessible to the cleaning fluids as specified by the end user.

(b) For cleaning purposes the annular space shall have the target value of *L/A* ratio of 2:1 or a minimum of 1 in. (25 mm) gap (whichever is larger) between the agitator shaft and the agitator nozzle.

(c) The agitators and mixers shall be installed in a way that ensures ready access for routine maintenance.

(d) The manufacturers of magnetically driven mixers shall supply written verification that the bearings are

Copyright ASME International
Provided by IHS under license with ASME
No reproduction or networking permitted without license from IHS
Not for Resale

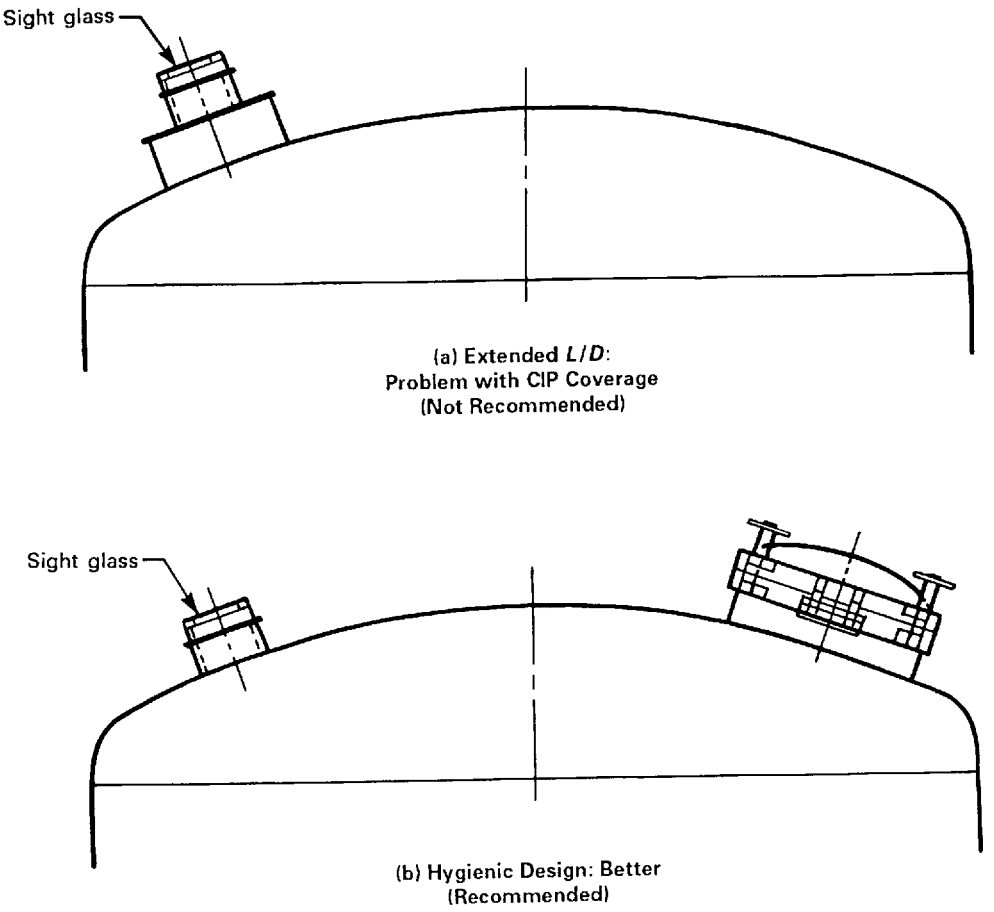

FIG. SD-13 VESSEL SIGHT GLASS LOCATION

manufactured from materials that minimize particle generation and are designed for cleanability.

(e) Drip shields shall not be used internally.

(f) Hidden surfaces or shadow forming surfaces, such as the underside of shaft couplings or impeller hubs, shall be accessible to the cleaning fluids as specified by the end user.

(g) The manufacturers of agitators and mixers shall verify the sterility and cleanability of their equipment as specified and agreed to with the end user.

(h) Composite gearing, couplings, shafts, housings, etc., shall not be used unless specifically approved by the owner/user.

(i) Clamped mounting flanges may be used only when the torque requirements that ensure an appropriate seal can be achieved.

(j) Mechanical seals shall be of an approved hygienic design, suited for the service application and the process requirements.

(k) Hexagon socket head cap screws shall not be used if they are in contact with the product.

(l) Bottom entry agitator design shall incorporate full drainage capability.

SD-4.8.2 In-Tank Couplings (see Fig. SD-21) (02)

(a) Use of in-tank shaft couplings shall be by end user consent.

(b) Use of in-tank couplings shall be restricted to locations above the liquid level.

(c) In-tank couplings shall be of an acceptable hygienic design (see Fig. SD-21).

(d) O-rings rather than flat gaskets should be used, if possible.

(e) For bolted connections on agitator components, O-ring lock washers should be used instead of flat faced ones.

(f) Free draining type fasteners, such as acorn style nuts, should be used.

Copyright ASME International
Provided by IHS under license with ASME
No reproduction or networking permitted without license from IHS
Not for Resale

Copyright ASME International
Provided by IHS under license with ASME
No reproduction or networking permitted without license from IHS
Not for Resale

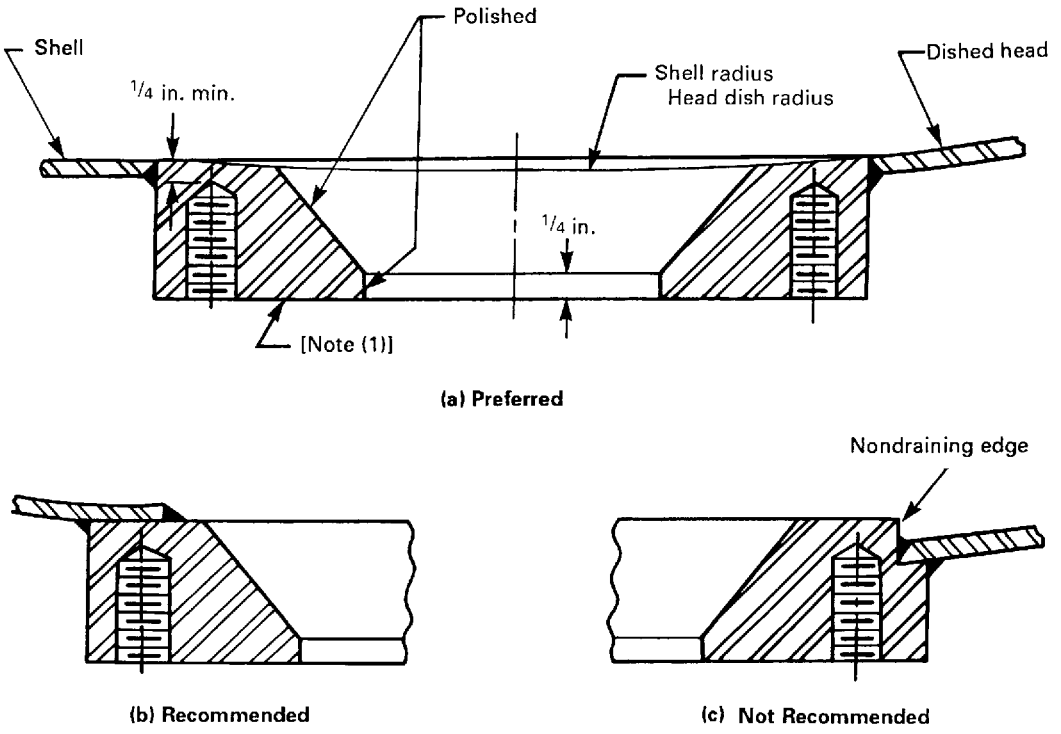

NOTE:
(1) If a flat gasket is used, mismatch of diameters can result in crevices.

FIG. SD-14 SIDE AND BOTTOM CONNECTIONS

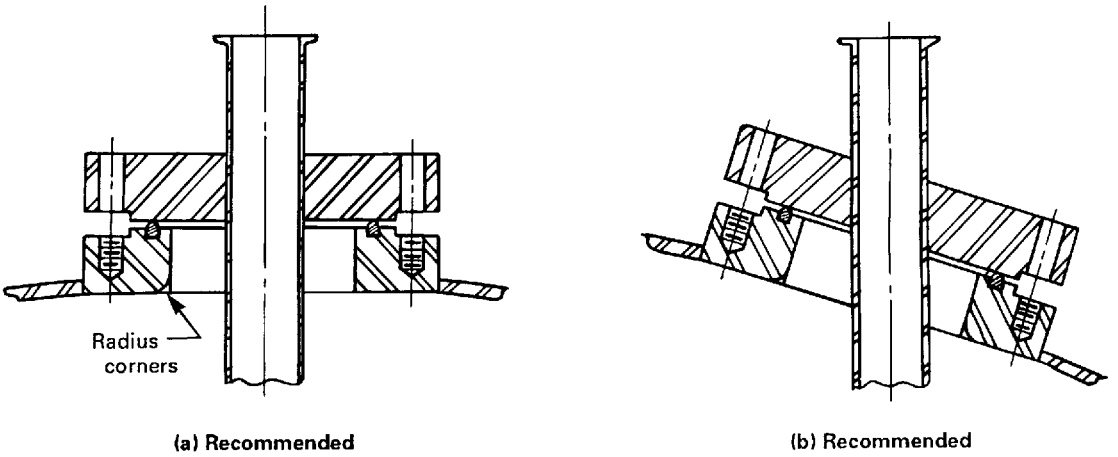

FIG. SD-15 DIP TUBE NOZZLES: REMOVABLE DESIGNS (a)

Copyright ASME International
Provided by IHS under license with ASME
No reproduction or networking permitted without license from IHS
Not for Resale

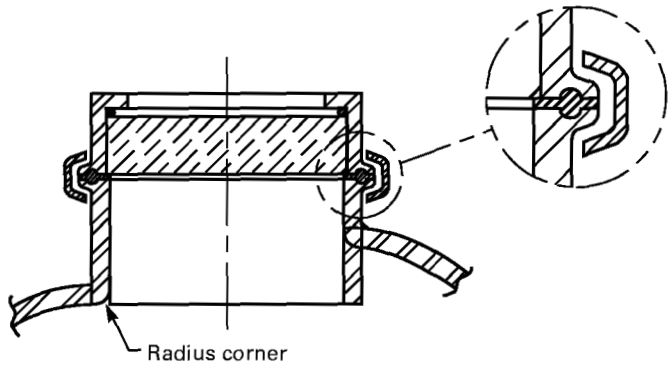

Preferred **Recommended**

GENERAL NOTE: Must have radius on inside bottom corner

(a) Recommended and Preferred

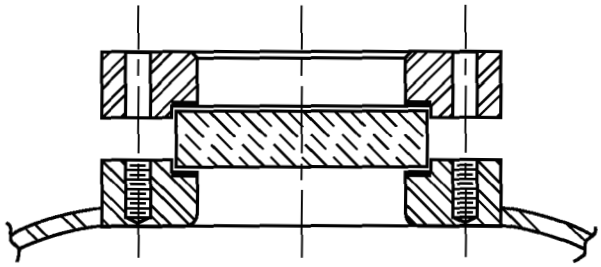

GENERAL NOTES:
(a) Should have O-rings for glass seal
(b) Needs radius on inside corner (product contact)

(b) Not Recommended

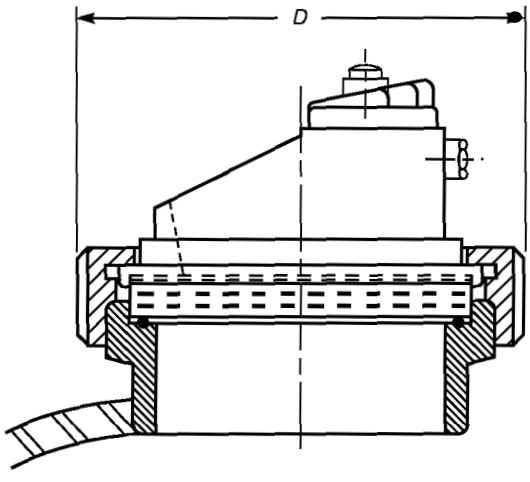

(c) Recommended

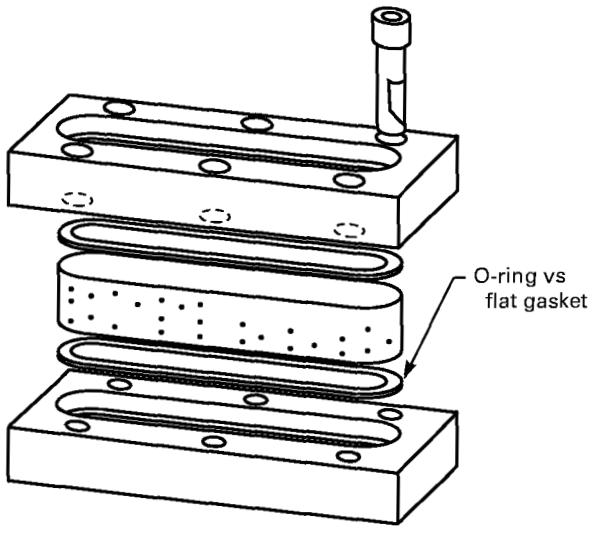

(d) Recommended (O-Ring)
Not Recommended (Flat Gasket)

FIG. SD-16 SIGHT GLASS DESIGN

(g) Acorn style nuts rather than hex headed nuts or cap screws should be used since the threads will not be exposed.

(h) In no case shall exposed threads be allowed.

(i) In-tank couplings should be fastened to blind tapped threads in the upper coupling and sealed by an O-ring (see Fig. SD-21).

(02) SD-4.8.3 Keyways

(a) Welded hubs are preferred over keyways.

(b) Keyways, if used when agreed to by the owner/user and manufacturer, shall have maximum possible radii with sloping surfaces.

SD-4.8.4 Shafts and Shaft Sleeves (02)

(a) All stepped shafts shall be free-draining and cleanable.

(b) Horizontal steps should, if possible, have a 3:1 slope.

(c) Radius of edges shall be as specified by SD-3.1.8.

(d) Hollow shafts may be used only if agreed to

Copyright ASME International
Provided by IHS under license with ASME
No reproduction or networking permitted without license from IHS Not for Resale

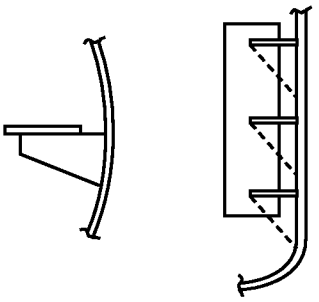

GENERAL NOTES:
(a) Flat surfaces
(b) Ledges
(c) CIP shadows

(a) Nonhygienic Design
(Not Recommended)

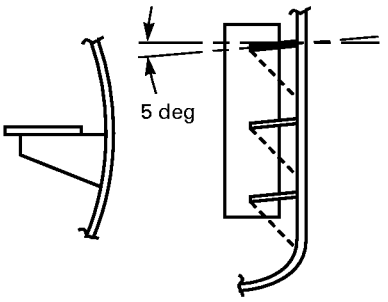

GENERAL NOTES:
(a) Still flat surfaces
(b) Sloped for drainage
(c) Still CIP shadows

(b) Semihygienic Design
(Recommended)

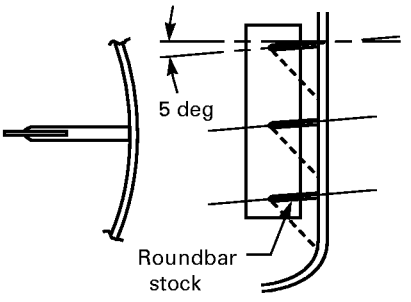

GENERAL NOTES:
(a) Sloped
(b) Minimum shadow
(c) Curved surface

(c) Full Hygienic
(Preferred)

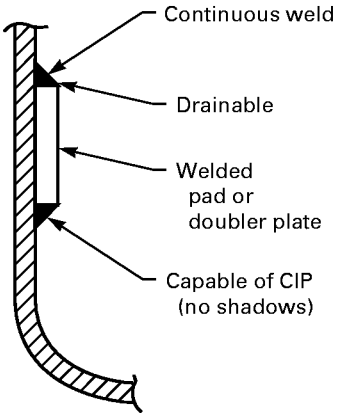

(d) Good Design
(Recommended)

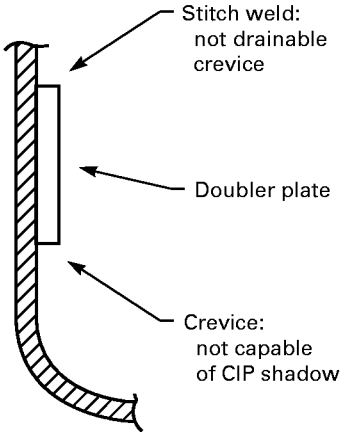

(e) Poor Design
(Not Recommended)

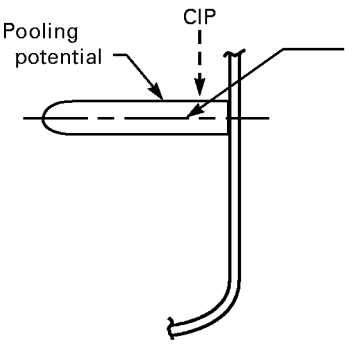

(f) Positive Slope in Only One Direction
(Recommended)

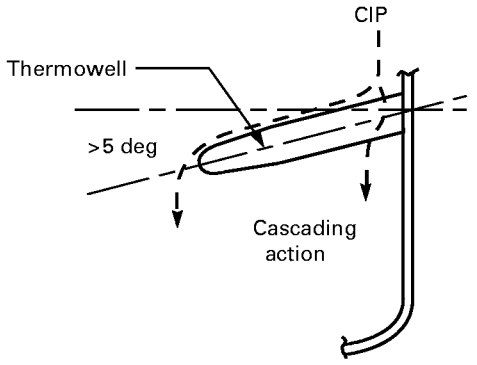

(g) Positive Slope in All Directions
(Preferred)

FIG. SD-17 INTERNAL SUPPORT MEMBERS **(a)**

Copyright ASME International
Provided by IHS under license with ASME
No reproduction or networking permitted without license from IHS Not for Resale

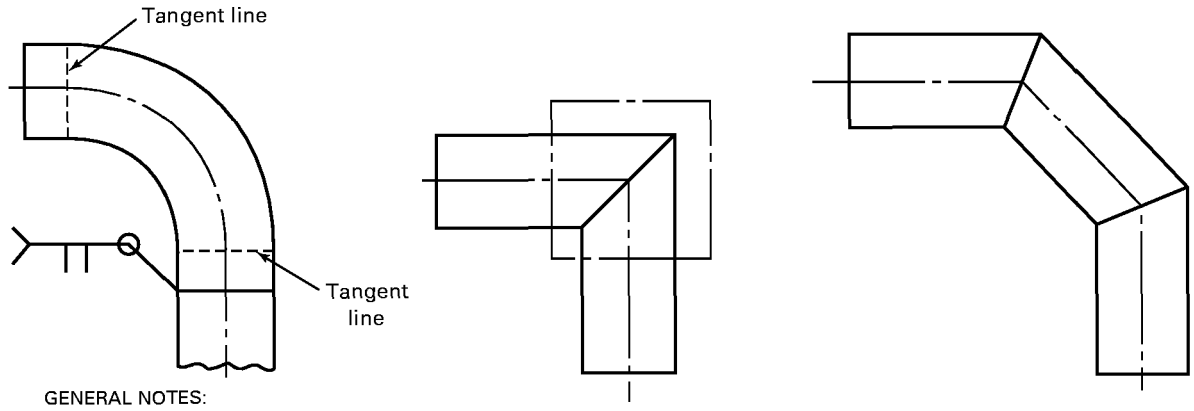

FIG. SD-18 MITERED FITTINGS

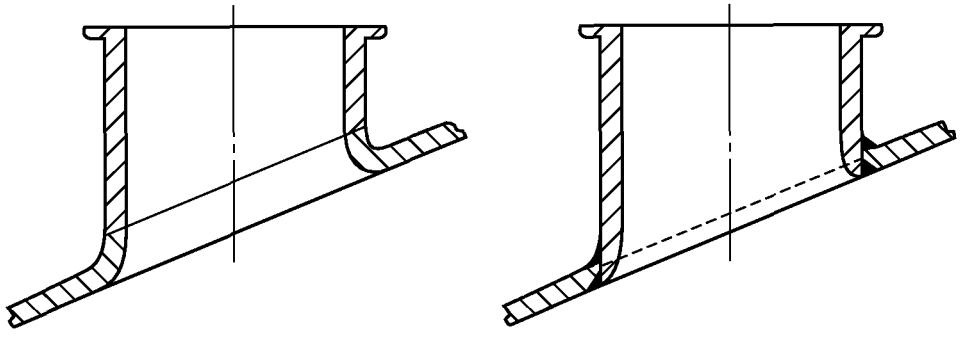

FIG. SD-19 TYPICAL NOZZLE DETAIL

bythe owner/user and manufacturer. Prior to installation, hollow shafts shall be inspected for cracks and porosity.

(e) Step shafts for agitators and mixers shall be used only when approved by the owner/user. When used, they shall drain properly and be accessible to the cleaning fluids as specified by the end user (see Fig. SD-20).

(02) SD-4.8.5 Hubs and Impellers

(a) Hubs and impellers should, if possible, be of an all welded construction.

(b) Hubs shall have sloped surfaces to prevent hold-up of liquids (see Fig. SD-22).

(c) Impellers should incorporate drain holes and sloped surfaces to ensure drainage.

(d) Flat, horizontal surfaces should be eliminated.

(e) Impellers should, if possible, be welded to the shaft.

SD-4.8.6 Steady Bearings (02)

(a) The use of steady bearings should be avoided. However, if steady bearings are used, then they shall not interfere with the free drainage of the vessel.

(b) Pedestal support members shall be constructed from solid bar stock and ensure free drainage of vessel.

Copyright ASME International
Provided by IHS under license with ASME
No reproduction or networking permitted without license from IHS
Not for Resale

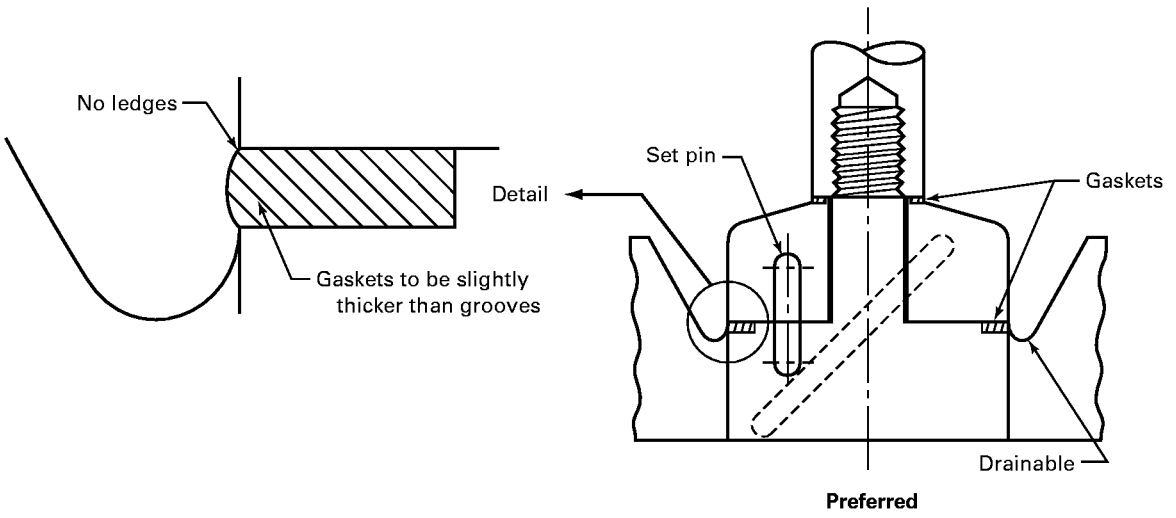

FIG. SD-22 REMOVABLE AGITATOR IMPELLER DESIGN (a)

(02) (a) SD-4.9.2 Cleanability and Sterility

(a) The product contact surfaces shall be constructed for CIP and SIP or other cleaning/sterilization methods specified by the owner/user.

(b) The cleaning and sterilization specifications shall be provided by the owner/user prior to the design of the heat exchanger.

(02) (a) SD-4.9.3 Gaskets and Seals

(a) Gaskets that are in contact with product shall be removable and self-positioning, and shall have readily cleanable grooves.

(b) Channel/bonnet gaskets shall be of a cleanable design.

SD-4.10 Cell Disrupters

SD-4.10.1 Product contact material shall not affect product quality or integrity.

SD-4.10.2 The device shall be designed with the ability to optimize drainability.

SD-4.10.3 The design shall incorporate nonshedding components and parts.

SD-4.10.4 Safety rupture discs shall be oriented for drainability, while maintaining system integrity and safety.

SD-4.10.5 The disrupter shall be designed for ease of disassembly to allow for COP.

SD-4.11 High Purity Water and Steam Systems

SD-4.11.1 Pure/Clean Steam Distribution System

(a) The pure/clean steam distribution system should have adequate provision to remove air during start-up and normal operations.

(b) The distribution lines should have a fall in the direction of flow as indicated in SD-3.12.1. Where necessary, increases in height should be achieved by vertical rises.

(c) Adequate provision should be made to allow for line expansion and to prevent sagging of the distribution lines, so that line drainage is not reduced.

(d) Pure/clean steam distribution systems should not be directly interconnected to any unhygienic steam systems (e.g., plant steam systems).

(e) Pockets for the collection of condensate from the steam distribution system should be of equal size to the distribution line for sizes up to 4 in. (101.6 mm), and one or two line sizes smaller for lines of 6 in. (152.4 mm) or larger. These should be trapped at the bottom.

(f) Collection pockets should be installed at least every 100 ft (approximately 30 m), upstream of control and isolation valves, at the bottom of vertical risers, and at any other low points.

(g) Condensate should be allowed to drain freely away from steam traps. The use of overhead, directly coupled, pressurized condensate return systems should be avoided.

Copyright ASME International
Provided by IHS under license with ASME
No reproduction or networking permitted without license from IHS
Not for Resale

(h) Where possible, all components within the pure steam distribution system should be self-draining.

(i) Dead legs should be avoided by the careful design of runs and the use of steam traps to remove condensate.

SD-4.11.2 Pure/Clean Steam Valves. This paragraph covers valves for isolation, regulation, and control that are part of the pure steam system, and are subject to continuous steam service.

(a) Where possible, valves for pure/clean steam service shall be designed for optimum drainability, and in all cases shall have minimal fluid hold-up volumes.

(b) Ball valves are an acceptable industry standard for isolation purposes on continuous pure/clean steam service.

(c) All components of pure/clean steam service shall be suitable for continuous steam service at the temperatures and pressures specified by the owner/user.

(d) Requirements for operation under CIP and SIP conditions (see SD-4.6) can be relaxed when agreed to by the owner/user and manufacturer.

(e) Secondary stem seals with telltale connections are not required for steam service.

(f) Steam service valves shall be capable of being regularly maintained, either in- or out-of-line.

SD-4.11.3 Steam Traps

(a) Steam trap bodies shall have an internal surface finish as agreed to by all parties.

(b) Where used in process systems, the trap shall be capable of effectively venting air.

(c) Where installed on process systems, traps shall be maintainable to allow easy inspection and cleaning.

(d) The trap design and mode of operation shall be such that the risk of soil attachment to the internal wetted surfaces is minimized, especially around the valve head and seat.

(e) The trap shall be sized, operate, and be installed such that there is no backup of condensate into the process equipment under operating conditions.

(f) The trap shall be designed such that the normal mode of mechanical failure will be in the open position.

SD-4.11.4 High Purity Water Systems

(a) High purity water systems, such as USP Grade Water-for-Injection (WFI), USP Grade Purified Water, Reverse Osmosis Water, and USP Grade Waters should be designed as looped circulatory systems, rather than noncirculating, dead-ended, branched systems.

(b) Loops shall be designed with sufficient velocity to prevent stagnation in any dead legs.

SD-4.12 WFI Generators and Clean/Pure Steam Generators

(a) All surfaces that shall come into direct contact with the product, feedwater, or condensate/blowdown produced by the units shall be constructed of 316 stainless steel with all welded parts of 316L stainless steel or other material as specified by the owner/user.

(b) Connections to the product, feedwater, or condensate/blowdown produced by the units shall be made by the use of hygienic design fittings. All gasketed fittings should be constructed in such a manner as to avoid dead legs and crevices.

(c) Units should be completely drainable and should not contain any areas where chemicals used to clean and passivate the units are trapped or not easily flushed during rinsing operations.

SD-4.13 Micro/Ultrafiltration and Chromatography Systems

(a) Skid pumps designed for both process and CIP shall be designed to provide turbulent flow for cleaning. All process piping systems that include piping, tubing, and fluidic components shall be sloped for adequate drainage. For all low points in the system, a drain point shall be installed. A common drain port on the skid is preferred.

(b) Piping and equipment hold-up volume shall be minimized.

(c) Ultrafiltration cartridge housings shall be designed with connections and covers that will allow the unit to drain completely.

SD-4.14 Sterilizers/Autoclaves (02)

It is recommended that the general design concepts in this Part be followed relative to sterility and cleanability for these items.

SD-4.15 CIP Systems and Design

SD-4.15.1 General. The CIP skid and system is one of the most important pieces of equipment when considering cleanability and cross-contamination. Functional components of the CIP such as filters, pumps, vessels, tubing, and piping shall be designed to be self-cleaning and abide by the guidelines of this Part.

(a) To achieve the objective of a CIP process, the design shall consider the application of a CIP unit, chemical feed system, spray devices, and CIP supply and return piping. The inclusion of this equipment does not guarantee a cleanable process, if not properly

Copyright ASME International
Provided by IHS under license with ASME
No reproduction or networking permitted without license from IHS
Not for Resale

(a) SD-5.1 Spray Ball Test

The purpose of a spray ball test is to document proper fluid coverage of the internal surface and parts of a tank or piece of equipment. The results give information about fluid coverage, a requirement for cleanability. All internal instruments shall be installed (e.g., agitators, level probes, dip pipes) during the spray ball testing. If it is not practical to conduct the test with all interior equipment in place, dummy shafts and dip tubes may be used to check shadowing. Cleaning of impellers may have to be verified during production CIP validation, i.e., hot WFI, cleaning agents, etc. Spray balls shall be drainable, shall provide hole patterns to ensure that complete coverage is attained, and shall be properly manufactured to minimize corrosion.

The test shall be performed by spraying a dye (e.g., riboflavin) on the entire interior of the equipment product/process contact walls, nozzles, and miscellaneous surfaces. The test may be performed with ambient temperature water and before the riboflavin dye has dried. This test will confirm coverage of the sprayballs, but may not verify cleanability. Cleanability should be checked using the full CIP protocol at the facility where the vessel is installed including cleansers and temperatures. Water used for the following rinse shall meet the requirements of SD-5.3:

(a) pressure;

(b) flow (per spray device); and

(c) burst duration and delay sequence between bursts.

Acceptance shall be determined when all (100%) of the dye has been removed via the rinse. This shall be visually determined using an ultraviolet lamp, or by other verification methods as agreed to by the owner/user and manufacturer.

SD-5.2 Sterility/Cleaning Testing

Sterility and cleanability testing (other than spray ball testing) shall be as agreed to by the owner/user and manufacturer, and in accordance with accepted industry standards.

SD-5.3 Hydrostatic Test

Where applicable, all product contact surfaces shall be hydrostatically tested with clean purified or deionized water filtered at 0.2 μm. If purified or deionized water is not available, then the water quality for testing shall be agreed to by the owner/user and manufacturer.

SD-5.4 Drainability Test

A drainability test for vessels shall be conducted as agreed to by all parties. As a proposed test procedure, the following shall be considered. The bottom head of the vessel shall be leveled with the outlet nozzle flange face (to within a tolerance agreed to) and shall be filled approximately to the weld seam. The outlet valve shall be opened, and the vessel allowed to drain by gravity. There shall be no puddles of water left on the bottom of the vessel greater than 5 mm in diameter (or as agreed to by the owner/user and manufacturer). If there are any puddles greater than the agreed-upon diameter, a thumb or soft rubber dowel is to be pushed into the center of the puddle, displacing the water. If water returns to the puddle, that area shall be repaired to the satisfaction of the owner/user.

SD-6 DOCUMENTATION (a)

Documentation requirements shall be agreed to at the outset of a design project and shall be available upon request or submitted at the agreed-upon time to support the requirements of this Standard, as agreed to by the owner/user and manufacturer.

For all bioprocessing ASME Code stamped vessels, National Board registration is recommended to maintain vessel data on file.

Technical documentation to support the design of equipment and verify conformance with sterility and cleanability criteria may include, but not be limited to, the following:

(a) material handling procedures

(b) welding procedures

(c) mechanical and electrochemical polishing procedures

(d) standard operating and maintenance procedures and manuals

(e) installation procedures

(f) piping and instrumentation diagrams and technical references

(g) original equipment manufacturer's data

(h) surface finish certifications

(i) detail mechanical drawings and layouts

(j) certificates of compliance

(k) technical specification sheets of components

(l) manufacturer's data and test reports

(m) NDE reports

(n) shop passivation procedure

(o) material approvals and certifications from suppliers

(p) any additional documentation required by the user

Manufacturing documentation shall be maintained throughout the design and manufacture for each component, assembly, part, or unit.

All documentation shall be retained by the owner/user. As agreed to by the owner/user and manufacturer, documentation from the manufacturer will be retained

Copyright ASME International
Provided by IHS under license with ASME
No reproduction or networking permitted without license from IHS
Not for Resale

for the agreed-upon duration of time, but not less than three years after manufacture.

SD-7 RESPONSIBILITIES

When designing, specifying, or selecting equipment and systems that will be sterilizable and cleanable, it is necessary and important that all parties coordinate all phases of the project (design, specification, fabrication, testing, installation, start-up, validation, and actual production) to ensure sterilizable and cleanable equipment and systems.

It shall be the responsibility of all parties involved to adhere to the concepts of this Part (as they apply) to advance the knowledge and database for sterilizable and cleanable equipment and systems.

Copyright ASME International
Provided by IHS under license with ASME
No reproduction or networking permitted without license from IHS
Not for Resale

PART DT (02)
DIMENSIONS AND TOLERANCES FOR STAINLESS STEEL AUTOMATIC WELDING AND HYGIENIC CLAMP TUBE FITTINGS AND PROCESS COMPONENTS

(02) DT-1 SCOPE

(a) This Part describes the overall dimensions, tolerances, and markings for commercial stainless steel tube automatic weld and hygienic clamp fittings and process components. In addition to fittings, this Part also covers the tolerances and marking of commercial stainless steel process components including, but not limited to tubing, vessels, valves, pumps, filter housings, and instrumentation.

This Part describes the fittings made for use with nominal outside diameter (OD) tubing for the sizes listed in Table DT-1. The dimensions in metric units are conversions from the U.S. Customary units, and are listed for reference only. For nominal metric size tubing and fittings, refer to the appropriate international standards.

Elbows furnished to this Standard shall not be mitered.

(a) DT-2 PRESSURE RATING

Fittings manufactured to this Part shall meet or exceed the pressure ratings shown in Table DT-2, and shall have an ambient temperature bursting strength of at least three times the 100°F rated internal working pressure as shown in Table DT-2.

Fabricated components employing welds shall be rated at 100% of the above ratings. All welds shall meet the provisions of MJ-6 and Fig. MJ-1.

(02) DT-3 MARKING

(a) DT-3.1 Marking Information

Except as specified in DT-3.3, each fitting and process component shall be marked to show the following:

(a) heat number/code traceable to material test report for each product contact surface component

(b) material type

(c) manufacturer's name, logo, or trademark

(d) reference to this Standard (ASME BPE)

(e) internal surface symbol for the appropriate BPE specification

DT-3.2 Method of Marking

The manufacturer's name or trademark, specification number, internal surface symbol, and heat numbers shall be permanently marked on the fitting or process component by any suitable method not injurious to the product contact surface of the fitting or process component.

DT-3.3 Exceptions

(a) Where the size of the fitting or process component does not permit complete marking, the identification marks may be omitted in reverse of the order presented above. However, the heat number and material type must be marked on the fitting or process component.

(b) Where the size of the fitting or process component does not permit complete marking of the heat number, a manufacturer's code number is acceptable under this Standard.

DT-4 MATERIALS (02) (a)

Generally, materials furnished to this Standard shall be Type 316, Type 316L, or other material agreed to by the purchaser and manufacturer.

Where Type 316L is specified, the material of the automatic weld end shall conform to the requirements for chemical composition as prescribed in Table DT-3.

For nonautomatic weld ends, the chemical composition shall meet the requirements of the applicable ASTM specification.

DT-5 METAL THICKNESS (02)

As these fittings and process components are to match tube dimensions, the thickness of the weld ends must conform with the tolerances listed in Table DT-5 and Table DT-6. The nominal wall thickness of the fittings and process components shall be the same as the tube to which they are welded.

After fabrication and surface treatment, the wall thickness in any formed part of the fitting or process component, beyond the control portion as defined in

Copyright ASME International
Provided by IHS under license with ASME
No reproduction or networking permitted without license from IHS
Not for Resale

(02)

TABLE DT-1 NOMINAL OD TUBING SIZES

Nominal Size, in.	Tube OD		Tube Wall Thickness		Hygienic Clamp Size, in.
	in.	mm	in.	mm	
1/4	0.250	6.35	0.035	0.89	3/4
3/8	0.375	9.53	0.035	0.89	3/4
1/2	0.500	12.70	0.065	1.65	3/4
3/4	0.750	19.05	0.065	1.65	3/4
1	1.000	25.40	0.065	1.65	1 1/2
1 1/2	1.500	38.10	0.065	1.65	1 1/2
2	2.000	50.80	0.065	1.65	2
2 1/2	2.500	63.50	0.065	1.65	2 1/2
3	3.000	76.20	0.065	1.65	3
4	4.000	101.60	0.083	2.11	4
6	6.000	152.40	0.109	2.77	6

GENERAL NOTE: Refer to ASTM A 270, Supplement 2 for tubing tolerances.

(a)

TABLE DT-2 HYGIENIC UNIONS

Temperature		Weld Joint, All Sizes		< 3 in. Clamp		3 in. Clamp		4 in. Clamp		6 in. Clamp	
°F	°C	psig	kPa (gage)	psig	kPa (gage)	psig	kPa (gage)	psig	kPa (gage)	psig	kPa (gage)
100	38	200	1,379	200	1,379	200	1,379	200	1,379	150	1,034
250	121	200	1,379	165	1,138	150	1,034	125	862	75	517

GENERAL NOTE: These pressure ratings apply to the hygienic clamp and gasket. For information on pressure and temperature ratings, see the manufacturer's guidelines for the components.

(02)
(a)

TABLE DT-3 CHEMICAL COMPOSITION FOR AUTOMATIC WELD ENDS, %

Carbon, max	0.035
Chromium	16.00–18.00
Manganese, max	2.00
Molybdenum	2.00–3.00
Nickel	10.00–15.00
Phosphorus, max	0.045
Silicon, max	1.00
Sulfur	0.005–0.017

DT-8, shall be a minimum of 65% of the nominal wall thickness. For guidelines regarding all shop and field welds, refer to Part MJ.

TABLE DT-4 TANGENT LENGTHS (02)

Nominal OD Tube Size, in.	Tangent, *T*	
	in.	mm
1/4	1.50	38.10
3/8	1.50	38.10
1/2	1.50	38.10
3/4	1.50	38.10
1	1.50	38.10
1 1/2	1.50	38.10
2	1.50	38.10
2 1/2	1.50	38.10
3	1.75	44.45
4	2.00	50.80
6	2.50	63.50

(02) DT-6 FITTING DIMENSIONS

(a)

Dimensions for the fittings covered by this Standard are given in Tables DT-7 through DT-30.

All fittings shall have minimum tangent lengths for automatic welding per Table DT-4. The tangent length *T* is defined as the straight length measured from the welding end.

All sizes shown are nominal OD tube sizes.

Fittings not specifically described in Tables DT-7 through DT-30 may be constructed using combinations of centerline-to-end dimensions from the tables.

For tees and crosses, use Tables DT-18 and DT-19 for standard clamp leg lengths, Tables DT-14 and DT-15 for short outlet branch clamp lengths, Table DT-25 for short outlet run clamp lengths, and Table DT-9 for weld end

Copyright ASME International
Provided by IHS under license with ASME
No reproduction or networking permitted without license from IHS
Not for Resale

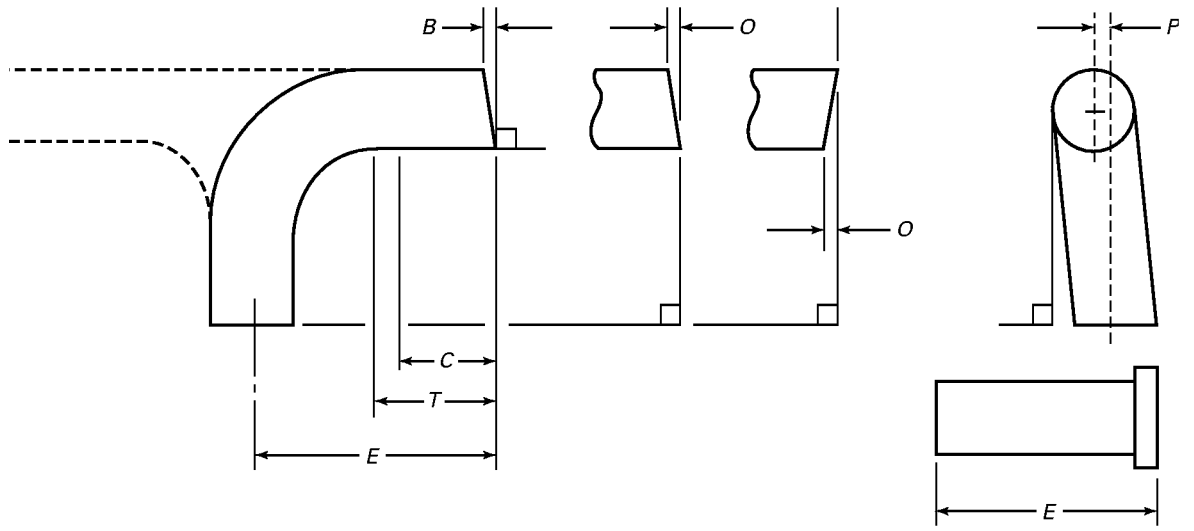

TABLE DT-5 FINAL TOLERANCES FOR MECHANICALLY POLISHED FITTINGS AND PROCESS COMPONENTS (02) (a)

Nominal Size, in.	OD		Wall Thickness		Squareness Face to Tangent, *B*		Off Angle, *O*		Equivalent Angle (For *O*)	Off Plane, *P*	
	in.	mm	in.	mm	in.	mm	in.	mm	deg	in.	mm
1/4	± 0.005	± 0.13	+0.003/–0.004	+0.08/–0.10	0.005	0.13	0.009	0.23	2.1	0.030	0.76
3/8	± 0.005	± 0.13	+0.003/–0.004	+0.08/–0.10	0.005	0.13	0.012	0.30	1.8	0.030	0.76
1/2	± 0.005	± 0.13	+0.005/–0.008	+0.13/–0.20	0.005	0.13	0.014	0.36	1.6	0.030	0.76
3/4	± 0.005	± 0.13	+0.005/–0.008	+0.13/–0.20	0.005	0.13	0.018	0.46	1.4	0.030	0.76
1	± 0.005	± 0.13	+0.005/–0.008	+0.13/–0.20	0.008	0.20	0.025	0.64	1.4	0.030	0.76
1 1/2	± 0.008	± 0.20	+0.005/–0.008	+0.13/–0.20	0.008	0.20	0.034	0.86	1.3	0.050	1.27
2	± 0.008	± 0.20	+0.005/–0.008	+0.13/–0.20	0.008	0.20	0.043	1.09	1.2	0.050	1.27
2 1/2	± 0.010	± 0.25	+0.005/–0.008	+0.13/–0.20	0.010	0.25	0.054	1.37	1.2	0.050	1.27
3	± 0.010	± 0.25	+0.005/–0.008	+0.13/–0.20	0.016	0.41	0.068	1.73	1.3	0.050	1.27
4	± 0.015	± 0.38	+0.008/–0.010	+0.20/–0.25	0.016	0.41	0.086	2.18	1.2	0.060	1.52
6	± 0.030	± 0.76	+0.015/–0.015	+0.38/–0.38	0.030	0.76	0.135	3.43	1.3	0.060	1.52

GENERAL NOTE: Tolerance on end-to-end and center-to-end: dimension *E* is ±0.050 in. (1.27 mm). See Table DT-4 for "T" tangent length dimensions. See Table DT-6 for electropolished wall thickness tolerances. See para. DT-8 (Tolerances) for "C" control portion lengths.

lengths. Adjacent legs less than 180 deg apart cannot be constructed using more than one short outlet sanitary hygienic clamp.

(a) DT-6.1 Special Angle Fittings

Special angle fittings can be offered if in accordance to all DT tables, with the exception of "O" (off angle) in Table DT-5.

DT-7 TESTS

Hydrostatic testing of each fitting is not required in this Standard; however, fittings shall be capable of withstanding a hydrostatic test pressure of 1.5 times the pressure rating shown in Table DT-2 at 100°F (38°C).

DT-8 TOLERANCES (02) (a)

Tables DT-5 and DT-6 list the required tolerances for fittings and process components covered by this Standard.

These tolerances shall apply after heat and surface treatment.

The control portion of the fitting or process components (Ref. "C" in sketch of Table DT-5) is defined as the length from the welding end over which tolerances for wall thickness and OD are

Copyright ASME International
Provided by IHS under license with ASME
No reproduction or networking permitted without license from IHS
Not for Resale

(02) TABLE DT-6 FINAL TOLERANCES FOR ELECTROPOLISHED FITTINGS AND PROCESS COMPONENTS

	Wall Thickness	
Nominal Size, in.	in.	mm
1/4	+0.003/–0.006	+0.08/–0.15
3/8	+0.003/–0.006	+0.08/–0.15
1/2	+0.005/–0.010	+0.13/–0.25
3/4	+0.005/–0.010	+0.13/–0.25
1	+0.005/–0.010	+0.13/–0.25
1 1/2	+0.005/–0.010	+0.13/–0.25
2	+0.005/–0.010	+0.13/–0.25
2 1/2	+0.005/–0.010	+0.13/–0.25
3	+0.005/–0.010	+0.13/–0.25
4	+0.008/–0.012	+0.20/–0.30
6	+0.015/–0.017	+0.38/–0.43

maintained. The length of the control portion is fixed for all sizes at 0.75 in. (19 mm).

(02) DT-9 WELDING ENDS

Automatic weld ends furnished to this Standard shall be furnished with square-cut ends, free from burrs and breaks.

(02) DT-10 HYGIENIC CLAMP ENDS

Fittings and process components furnished to this Standard with hygienic clamp ends shall employ gasket materials and a gasket design capable of withstanding the temperatures and pressures established in Table DT-2 and meeting the requirements of Part SG.

DT-11 HEAT TREATMENT

Heat treatment of fittings is not a requirement of this Standard.

Where annealing is used, the annealing procedure shall consist of heating the material to a minimum temperature of 1,900°F (1,040°C) and quenching in water or rapid cooling by other means.

(02) DT-12 SURFACE CONDITION

The internal and external surfaces of fittings and process components furnished to this Standard may be finished using any combination of mechanical polishing, chemical polishing, and electropolishing at the request of the purchaser, conforming with Part SF. Internal and external surfaces of fittings and process components furnished to this Standard shall be cleaned to remove oils, grease, particulates, and grinding compounds or electrolytes.

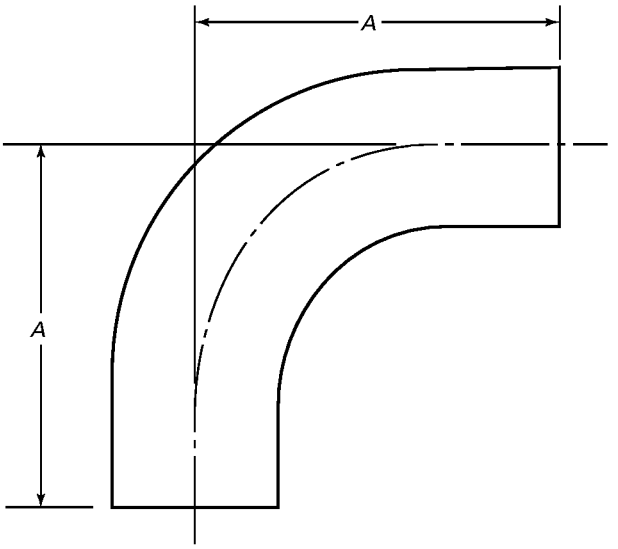

TABLE DT-7 AUTOMATIC TUBE WELD: 90 deg ELBOW (02)

	A	
Nominal Size, in.	in.	mm
1/4	2.625	66.7
3/8	2.625	66.7
1/2	3.000	76.2
3/4	3.000	76.2
1	3.000	76.2
1 1/2	3.750	95.3
2	4.750	120.7
2 1/2	5.500	139.7
3	6.250	158.8
4	8.000	203.2
6	11.500	292.1

DT-13 PACKAGING (02)

All end connections of fittings or process components shall be protected with end caps. Additionally, for fittings, they shall be sealed in transparent bags or shrink wrapped. Additional packaging for process components, other than fittings, shall be as agreed to by the purchaser and manufacturer.

Copyright ASME International
Provided by IHS under license with ASME
No reproduction or networking permitted without license from IHS
Not for Resale

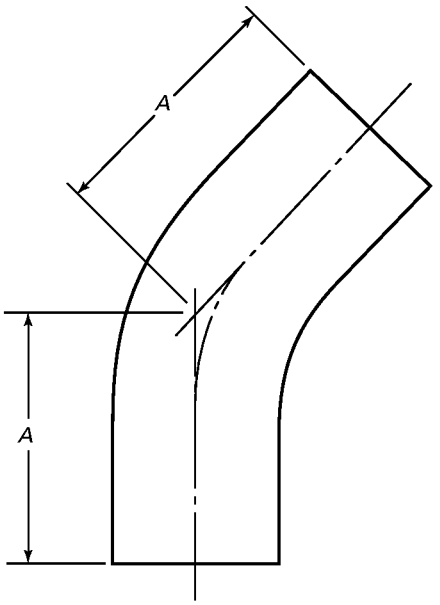

(02) **TABLE DT-8 AUTOMATIC TUBE WELD: 45 deg ELBOW**

	A	
Nominal Size, in.	**in.**	**mm**
1/4	2.000	50.8
3/8	2.000	50.8
1/2	2.250	57.2
3/4	2.250	57.2
1	2.250	57.2
1 1/2	2.500	63.5
2	3.000	76.2
2 1/2	3.375	85.7
3	3.625	92.1
4	4.500	114.3
6	6.250	158.8

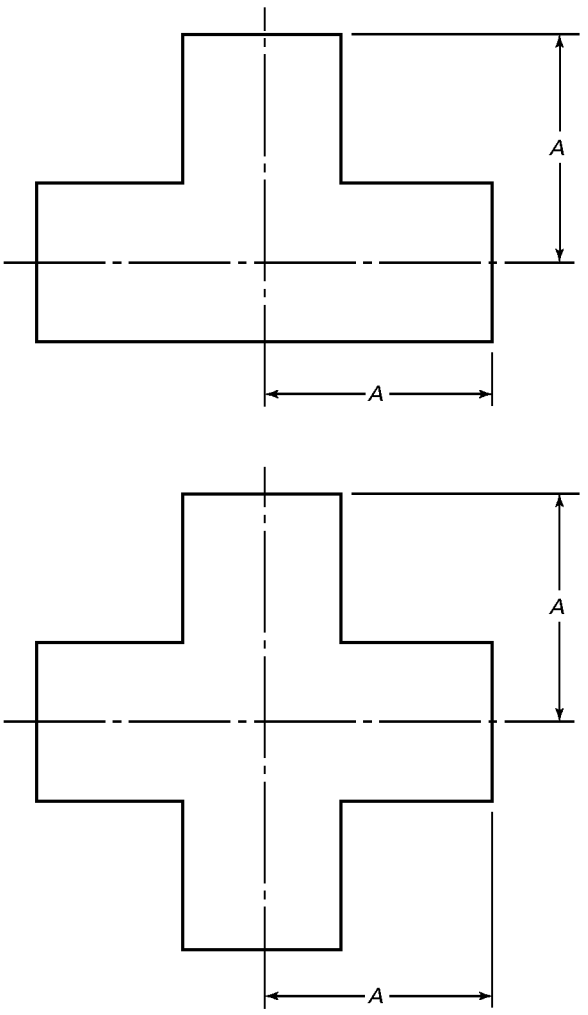

TABLE DT-9 AUTOMATIC TUBE WELD: STRAIGHT TEE AND CROSS (02)

	A	
Nominal Size, in.	**in.**	**mm**
1/4	1.750	44.5
3/8	1.750	44.5
1/2	1.875	47.6
3/4	2.000	50.8
1	2.125	54.0
1 1/2	2.375	60.3
2	2.875	73.0
2 1/2	3.125	79.4
3	3.375	85.7
4	4.125	104.8
6	5.625	142.9

Copyright ASME International
Provided by IHS under license with ASME
No reproduction or networking permitted without license from IHS
Not for Resale

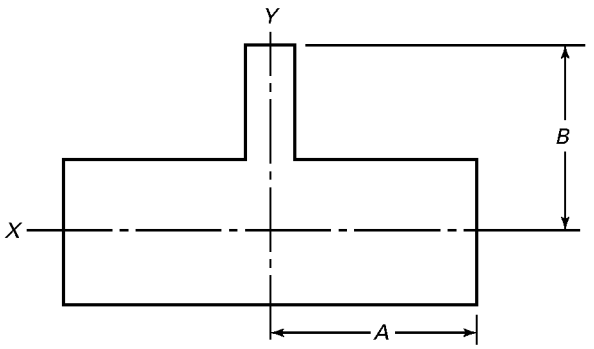

(02) (a) **TABLE DT-10 AUTOMATIC TUBE WELD: REDUCING TEE**

Nominal Size, in.		A		B	
X	Y	in.	mm	in.	mm
3/8	1/4	1.750	44.5	1.750	44.5
1/2	1/4	1.875	47.6	1.875	47.6
1/2	3/8	1.875	47.6	1.875	47.6
3/4	1/4	2.000	50.8	2.000	50.8
3/4	3/8	2.000	50.8	2.000	50.8
3/4	1/2	2.000	50.8	2.000	50.8
1	1/4	2.125	54.0	2.125	54.0
1	3/8	2.125	54.0	2.125	54.0
1	1/2	2.125	54.0	2.125	54.0
1	3/4	2.125	54.0	2.125	54.0
1 1/2	1/2	2.375	60.3	2.375	60.3
1 1/2	3/4	2.375	60.3	2.375	60.3
1 1/2	1	2.375	60.3	2.375	60.3
2	1/2	2.875	73.0	2.625	66.7
2	3/4	2.875	73.0	2.625	66.7
2	1	2.875	73.0	2.625	66.7
2	1 1/2	2.875	73.0	2.625	66.7
2 1/2	1/2	3.125	79.4	2.875	73.0
2 1/2	3/4	3.125	79.4	2.875	73.0
2 1/2	1	3.125	79.4	2.875	73.0
2 1/2	1 1/2	3.125	79.4	2.875	73.0
2 1/2	2	3.125	79.4	2.875	73.0
3	1/2	3.375	85.7	3.125	79.4
3	3/4	3.375	85.7	3.125	79.4
3	1	3.375	85.7	3.125	79.4
3	1 1/2	3.375	85.7	3.125	79.4
3	2	3.375	85.7	3.125	79.4
3	2 1/2	3.375	85.7	3.125	79.4
4	1/2	4.125	104.8	3.625	92.1
4	3/4	4.125	104.8	3.625	92.1
4	1	4.125	104.8	3.625	92.1
4	1 1/2	4.125	104.8	3.625	92.1
4	2	4.125	104.8	3.875	98.4
4	2 1/2	4.125	104.8	3.875	98.4
4	3	4.125	104.8	3.875	98.4
6	3	5.625	142.9	4.875	123.8
6	4	5.625	142.9	5.125	130.2

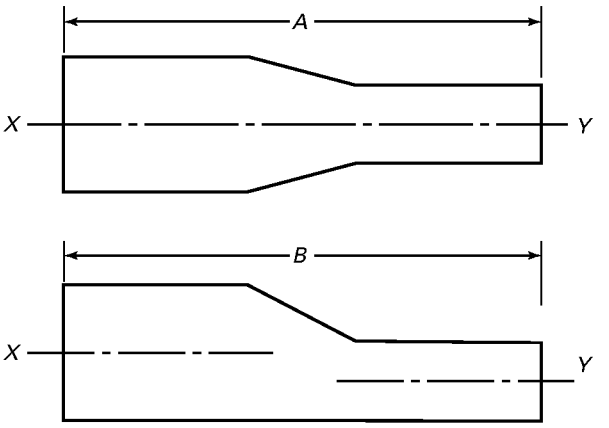

TABLE DT-11 AUTOMATIC TUBE WELD: CONCENTRIC AND ECCENTRIC REDUCER (02) (a)

Nominal Size, in.		A		B	
X	Y	in.	mm	in.	mm
3/8	1/4	3.250	82.6	4.000	101.6
1/2	1/4	3.250	82.6	4.000	101.6
1/2	3/8	3.250	82.6	4.000	101.6
3/4	1/4	3.250	82.6	4.000	101.6
3/4	3/8	3.250	82.6	4.000	101.6
3/4	1/2	4.000	101.6	4.000	101.6
1	1/4	4.500	114.3	4.500	114.3
1	3/8	4.500	114.3	4.500	114.3
1	1/2	4.500	114.3	4.500	114.3
1	3/4	4.000	101.6	4.000	101.6
1 1/2	1/2	5.500	139.7	5.500	139.7
1 1/2	3/4	5.000	127.0	5.000	127.0
1 1/2	1	5.000	127.0	5.000	127.0
2	1/2	7.750	196.9	7.750	196.9
2	3/4	7.250	184.2	7.250	184.2
2	1	7.250	184.2	7.250	184.2
2	1 1/2	5.250	133.4	5.250	133.4
2 1/2	1/2	9.750	247.7	9.750	247.7
2 1/2	3/4	9.250	235.0	9.250	235.0
2 1/2	1	9.250	235.0	9.250	235.0
2 1/2	1 1/2	7.250	184.2	7.250	184.2
2 1/2	2	5.500	139.7	5.500	139.7
3	1	11.250	285.8	11.250	285.8
3	1 1/2	9.250	235.0	9.250	235.0
3	2	7.500	190.5	7.500	190.5
3	2 1/2	5.500	139.7	5.500	139.7
4	1	15.500	393.7	15.500	393.7
4	1 1/2	13.500	342.9	13.500	342.9
4	2	11.750	298.5	11.750	298.5
4	2 1/2	9.750	247.7	9.750	247.7
4	3	7.750	196.9	7.750	196.9
6	3	10.000	254.0	9.750	247.7
6	4	10.000	254.0	10.000	254.0

Copyright ASME International
Provided by IHS under license with ASME
No reproduction or networking permitted without license from IHS
Not for Resale

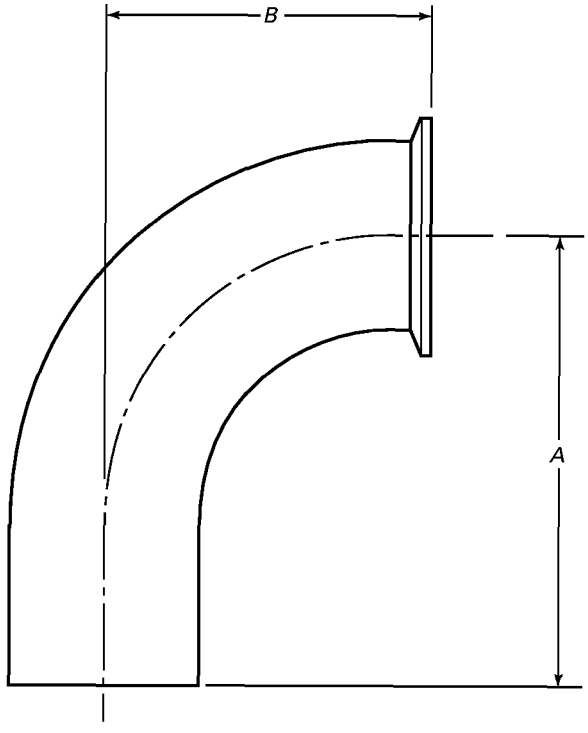

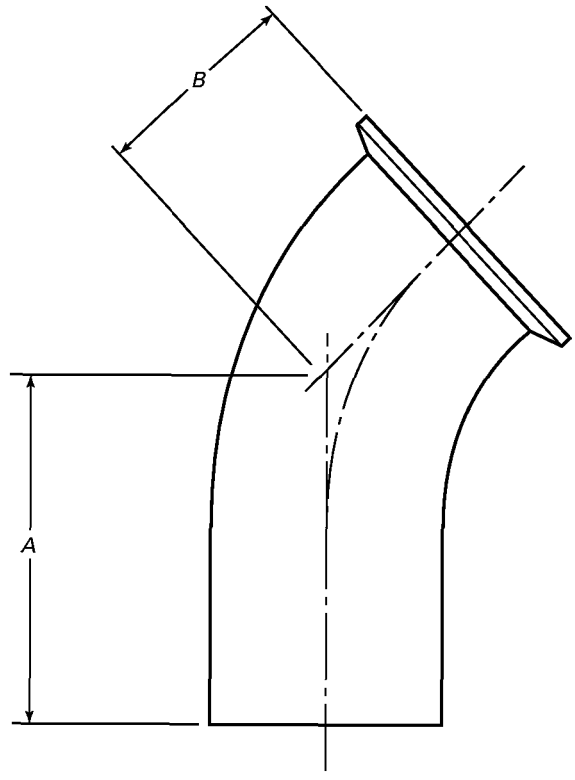

(02) **TABLE DT-12 AUTOMATIC TUBE WELD: HYGIENIC CLAMP JOINT, 90 deg ELBOW**

Nominal Size, in.	A		B	
	in.	mm	in.	mm
1/4	2.625	66.7	1.625	41.3
3/8	2.625	66.7	1.625	41.3
1/2	3.000	76.2	1.625	41.3
3/4	3.000	76.2	1.625	41.3
1	3.000	76.2	2.000	50.8
1 1/2	3.750	95.3	2.750	69.9
2	4.750	120.7	3.500	88.9
2 1/2	5.500	139.7	4.250	108.0
3	6.250	158.8	5.000	127.0
4	8.000	203.2	6.625	168.3
6	11.500	292.1	10.500	266.7

TABLE DT-13 AUTOMATIC TUBE WELD: HYGIENIC CLAMP JOINT, 45 deg ELBOW (02)

Nominal Size, in.	A		B	
	in.	mm	in.	mm
1/4	2.000	50.8	1.000	25.4
3/8	2.000	50.8	1.000	25.4
1/2	2.250	57.2	1.000	25.4
3/4	2.250	57.2	1.000	25.4
1	2.250	57.2	1.125	28.6
1 1/2	2.500	63.5	1.438	36.5
2	3.000	76.2	1.750	44.5
2 1/2	3.375	85.7	2.063	52.4
3	3.625	92.1	2.375	60.3
4	4.500	114.3	3.125	79.4
6	6.250	158.8	5.250	133.4

--`,,`,,`-`-`,,`,,`,`,,`---
Copyright ASME International
Provided by IHS under license with ASME
No reproduction or networking permitted without license from IHS
Not for Resale

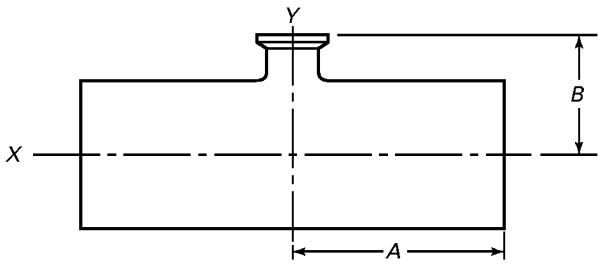

(02) (a) **TABLE DT-14 AUTOMATIC TUBE WELD: SHORT OUTLET HYGIENIC CLAMP JOINT REDUCING TEE**

Nominal Size, in.		A		B	
X	Y	in.	mm	in.	mm
3/8	1/4	1.750	44.5	1.000	25.4
1/2	1/4	1.875	47.6	1.000	25.4
1/2	3/8	1.875	47.6	1.000	25.4
3/4	1/4	2.000	50.8	1.000	25.4
3/4	3/8	2.000	50.8	1.000	25.4
3/4	1/2	2.000	50.8	1.000	25.4
1	1/4	2.125	54.0	1.125	28.6
1	3/8	2.125	54.0	1.125	28.6
1	1/2	2.125	54.0	1.125	28.6
1	3/4	2.125	54.0	1.125	28.6
1 1/2	1/2	2.375	60.3	1.375	34.9
1 1/2	3/4	2.375	60.3	1.375	34.9
1 1/2	1	2.375	60.3	1.375	34.9
2	1/2	2.875	73.0	1.625	41.3
2	3/4	2.875	73.0	1.625	41.3
2	1	2.875	73.0	1.625	41.3
2	1 1/2	2.875	73.0	1.625	41.3
2 1/2	1/2	3.125	79.4	1.875	47.6
2 1/2	3/4	3.125	79.4	1.875	47.6
2 1/2	1	3.125	79.4	1.875	47.6
2 1/2	1 1/2	3.125	79.4	1.875	47.6
2 1/2	2	3.125	79.4	1.875	47.6
3	1/2	3.375	85.7	2.125	54.0
3	3/4	3.375	85.7	2.125	54.0
3	1	3.375	85.7	2.125	54.0
3	1 1/2	3.375	85.7	2.125	54.0
3	2	3.375	85.7	2.125	54.0
3	2 1/2	3.375	85.7	2.125	54.0
4	1/2	4.125	104.8	2.625	66.7
4	3/4	4.125	104.8	2.625	66.7
4	1	4.125	104.8	2.625	66.7
4	1 1/2	4.125	104.8	2.625	66.7
4	2	4.125	104.8	2.625	66.7
4	2 1/2	4.125	104.8	2.625	66.7
4	3	4.125	104.8	2.625	66.7
6	1/2	5.625	142.9	3.625	92.1
6	3/4	5.625	142.9	3.625	92.1
6	1	5.625	142.9	3.625	92.1
6	1 1/2	5.625	142.9	3.625	92.1
6	2	5.625	142.9	3.625	92.1
6	2 1/2	5.625	142.9	3.625	92.1
6	3	5.625	142.9	3.625	92.1
6	4	5.625	142.9	3.750	95.3

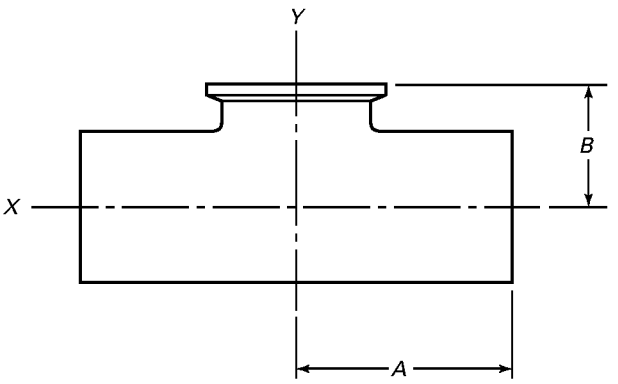

TABLE DT-15 AUTOMATIC TUBE WELD: SHORT OUTLET HYGIENIC CLAMP JOINT TEE (02)

Nominal Size, in.	A		B	
	in.	mm	in.	mm
1/4	1.750	44.5	1.000	25.4
3/8	1.750	44.5	1.000	25.4
1/2	1.875	47.6	1.000	25.4
3/4	2.000	50.8	1.125	28.6
1	2.125	54.0	1.125	28.6
1 1/2	2.375	60.3	1.375	34.9
2	2.875	73.0	1.625	41.3
2 1/2	3.125	79.4	1.875	47.6
3	3.375	85.7	2.125	54.0
4	4.125	104.8	2.750	69.9
6	5.625	142.9	4.625	117.5

Copyright ASME International
Provided by IHS under license with ASME
No reproduction or networking permitted without license from IHS
Not for Resale

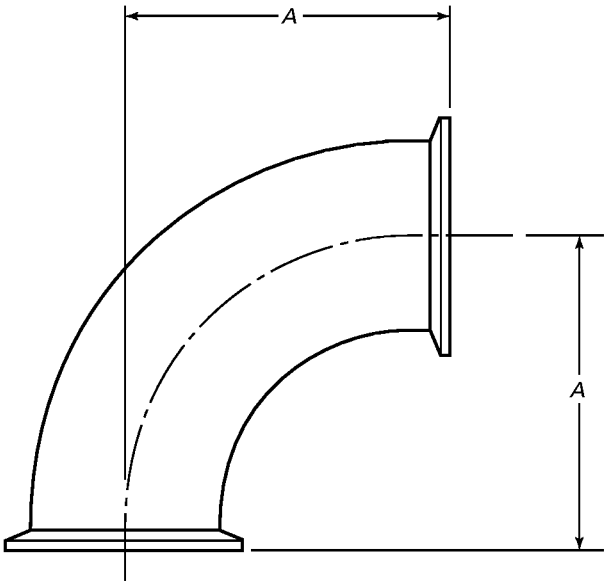

(02) **TABLE DT-16 HYGIENIC CLAMP JOINT: 90 deg ELBOW**

	A	
Nominal Size, in.	in.	mm
1/4	1.625	41.3
3/8	1.625	41.3
1/2	1.625	41.3
3/4	1.625	41.3
1	2.000	50.8
1 1/2	2.750	69.9
2	3.500	88.9
2 1/2	4.250	108.0
3	5.000	127.0
4	6.625	168.3
6	10.500	266.7

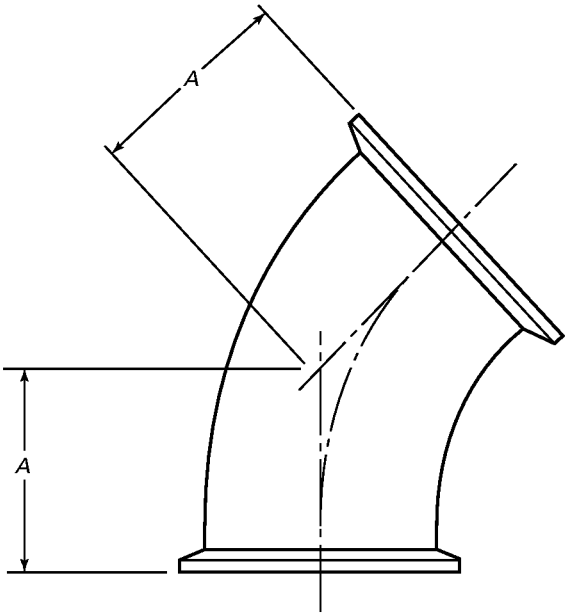

TABLE DT-17 HYGIENIC CLAMP JOINT: 45 deg ELBOW (02) (a)

	A	
Nominal Size, in.	in.	mm
1/4	1.000	25.4
3/8	1.000	25.4
1/2	1.000	25.4
3/4	1.000	25.4
1	1.125	28.6
1 1/2	1.483	37.7
2	1.750	44.5
2 1/2	2.063	52.4
3	2.375	60.3
4	3.125	79.4
6	5.250	133.4

Copyright ASME International
Provided by IHS under license with ASME
No reproduction or networking permitted without license from IHS Not for Resale

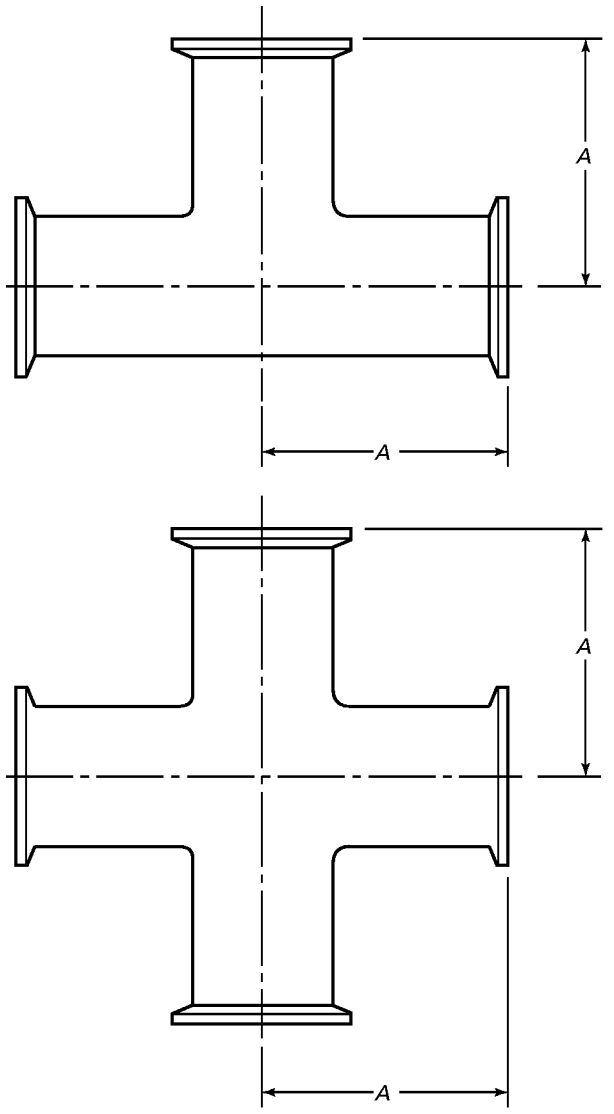

(02) **TABLE DT-18 HYGIENIC CLAMP JOINT: STRAIGHT TEE AND CROSS**

	A	
Nominal Size, in.	**in.**	**mm**
1/4	2.250	57.2
3/8	2.250	57.2
1/2	2.250	57.2
3/4	2.375	60.3
1	2.625	66.7
1 1/2	2.875	73.0
2	3.375	85.7
2 1/2	3.625	92.1
3	3.875	98.4
4	4.750	120.7
6	7.125	181.0

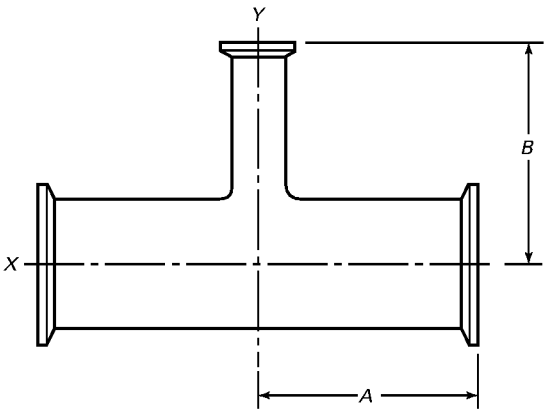

TABLE DT-19 HYGIENIC CLAMP JOINT: REDUCING TEE (02) (a)

Nominal Size, in.		*A*		*B*	
X	***Y***	**in.**	**mm**	**in.**	**mm**
3/8	1/4	2.250	57.2	2.250	57.2
1/2	1/4	2.375	60.3	2.375	60.3
1/2	3/8	2.375	60.3	2.375	60.3
3/4	1/4	2.500	63.5	2.500	63.5
3/4	3/8	2.500	63.5	2.500	63.5
3/4	1/2	2.500	63.5	2.500	63.5
1	1/4	2.625	66.7	2.625	66.7
1	3/8	2.625	66.7	2.625	66.7
1	1/2	2.625	66.7	2.625	66.7
1	3/4	2.625	66.7	2.625	66.7
1 1/2	1/2	2.875	73.0	2.875	73.0
1 1/2	3/4	2.875	73.0	2.875	73.0
1 1/2	1	2.875	73.0	2.875	73.0
2	1/2	3.375	85.7	3.125	79.4
2	3/4	3.375	85.7	3.125	79.4
2	1	3.375	85.7	3.125	79.4
2	1 1/2	3.375	85.7	3.125	79.4
2 1/2	1/2	3.625	92.1	3.375	85.7
2 1/2	3/4	3.625	92.1	3.375	85.7
2 1/2	1	3.625	92.1	3.375	85.7
2 1/2	1 1/2	3.625	92.1	3.375	85.7
2 1/2	2	3.625	92.1	3.375	85.7
3	1/2	3.875	98.4	3.625	92.1
3	3/4	3.875	98.4	3.625	92.1
3	1	3.875	98.4	3.625	92.1
3	1 1/2	3.875	98.4	3.625	92.1
3	2	3.875	98.4	3.625	92.1
3	2 1/2	3.875	98.4	3.625	92.1
4	1/2	4.750	120.7	4.125	104.8
4	3/4	4.750	120.7	4.125	104.8
4	1	4.750	120.7	4.125	104.8
4	1 1/2	4.750	120.7	4.125	104.8
4	2	4.750	120.7	4.375	111.1
4	2 1/2	4.750	120.7	4.375	111.1
4	3	4.750	120.7	4.375	111.1
6	3	7.125	181.0	5.375	136.5
6	4	7.125	181.0	5.750	146.1

Copyright ASME International
Provided by IHS under license with ASME
No reproduction or networking permitted without license from IHS
Not for Resale

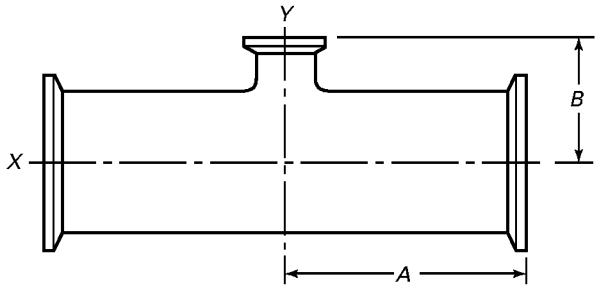

TABLE DT-20 HYGIENIC CLAMP JOINT: SHORT OUTLET REDUCING TEE (02) (a)

Nominal Size, in.		A		B	
X	Y	in.	mm	in.	mm
3/8	1/4	2.250	57.2	1.000	25.4
1/2	1/4	2.375	60.3	1.000	25.4
1/2	3/8	2.375	60.3	1.000	25.4
3/4	1/4	2.500	63.5	1.000	25.4
3/4	3/8	2.500	63.5	1.000	25.4
3/4	1/2	2.500	63.5	1.000	25.4
1	1/4	2.625	66.7	1.125	28.6
1	3/8	2.625	66.7	1.125	28.6
1	1/2	2.625	66.7	1.125	28.6
1	3/4	2.625	66.7	1.125	28.6
1 1/2	1/2	2.875	73.0	1.375	34.9
1 1/2	3/4	2.875	73.0	1.375	34.9
1 1/2	1	2.875	73.0	1.375	34.9
2	1/2	3.375	85.7	1.625	41.3
2	3/4	3.375	85.7	1.625	41.3
2	1	3.375	85.7	1.625	41.3
2	1 1/2	3.375	85.7	1.625	41.3
2 1/2	1/2	3.625	92.1	1.875	47.6
2 1/2	3/4	3.625	92.1	1.875	47.6
2 1/2	1	3.625	92.1	1.875	47.6
2 1/2	1 1/2	3.625	92.1	1.875	47.6
2 1/2	2	3.625	92.1	1.875	47.6
3	1/2	3.875	98.4	2.125	54.0
3	3/4	3.875	98.4	2.125	54.0
3	1	3.875	98.4	2.125	54.0
3	1 1/2	3.875	98.4	2.125	54.0
3	2	3.875	98.4	2.125	54.0
3	2 1/2	3.875	98.4	2.125	54.0
4	1/2	4.750	120.7	2.625	66.7
4	3/4	4.750	120.7	2.625	66.7
4	1	4.750	120.7	2.625	66.7
4	1 1/2	4.750	120.7	2.625	66.7
4	2	4.750	120.7	2.625	66.7
4	2 1/2	4.750	120.7	2.625	66.7
4	3	4.750	120.7	2.625	66.7
6	1/2	7.125	181.0	3.625	92.1
6	3/4	7.125	181.0	3.625	92.1
6	1	7.125	181.0	3.625	92.1
6	1 1/2	7.125	181.0	3.625	92.1
6	2	7.125	181.0	3.625	92.1
6	2 1/2	7.125	181.0	3.625	92.1
6	3	7.125	181.0	3.625	92.1
6	4	7.125	181.0	3.750	95.3

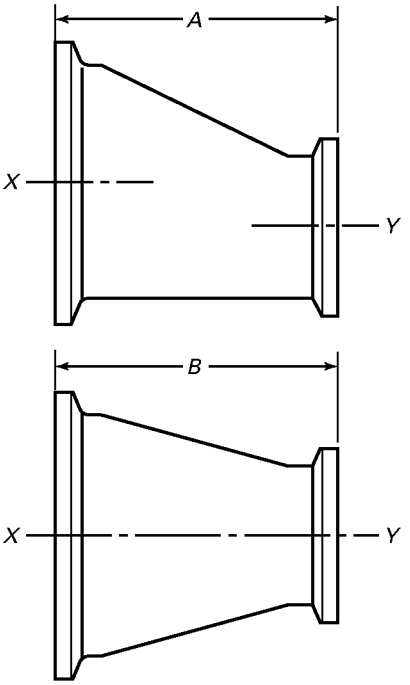

TABLE DT-21 HYGIENIC CLAMP JOINT: CONCENTRIC AND ECCENTRIC REDUCER (02) (a)

Nominal Size, in.		A		B	
X	Y	in.	mm	in.	mm
3/4	1/2	2.000	50.8	2.000	50.8
1	1/2	2.500	63.5	2.500	63.5
1	3/4	2.000	50.8	2.000	50.8
1 1/2	1/2	3.500	88.9	3.500	88.9
1 1/2	3/4	3.000	76.2	3.000	76.2
1 1/2	1	3.000	76.2	3.000	76.2
2	1/2	5.500	139.7	5.500	139.7
2	3/4	5.000	127.0	5.000	127.0
2	1	5.000	127.0	5.000	127.0
2	1 1/2	3.000	76.2	3.000	76.2
2 1/2	1/2	7.500	190.5	7.500	190.5
2 1/2	3/4	7.000	177.8	7.000	177.8
2 1/2	1	7.000	177.8	7.000	177.8
2 1/2	1 1/2	5.000	127.0	5.000	127.0
2 1/2	2	3.000	76.2	3.000	76.2
3	1	9.000	228.6	9.000	228.6
3	1 1/2	7.000	177.8	7.000	177.8
3	2	5.000	127.0	5.000	127.0
3	2 1/2	3.000	76.2	3.000	76.2
4	1	13.125	333.4	13.125	333.4
4	1 1/2	11.125	282.6	11.125	282.6
4	2	9.125	231.8	9.125	231.8
4	2 1/2	7.125	181.0	7.125	181.0
4	3	5.125	130.2	5.125	130.2
6	3	7.625	193.7	7.500	190.5
6	4	7.625	193.7	7.625	193.7

Copyright ASME International
Provided by IHS under license with ASME
No reproduction or networking permitted without license from IHS
Not for Resale

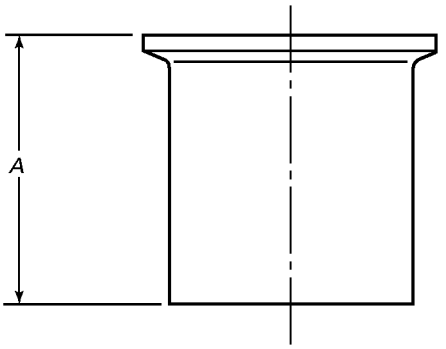

(02) **TABLE DT-22 AUTOMATIC TUBE WELD: FERRULE**

	A	
Nominal Size, in.	**in.**	**mm**
1/4	1.750	44.5
3/8	1.750	44.5
1/2	1.750	44.5
3/4	1.750	44.5
1	1.750	44.5
1 1/2	1.750	44.5
2	2.250	57.2
2 1/2	2.250	57.2
3	2.250	57.2
4	2.250	57.2
6	3.000	76.2

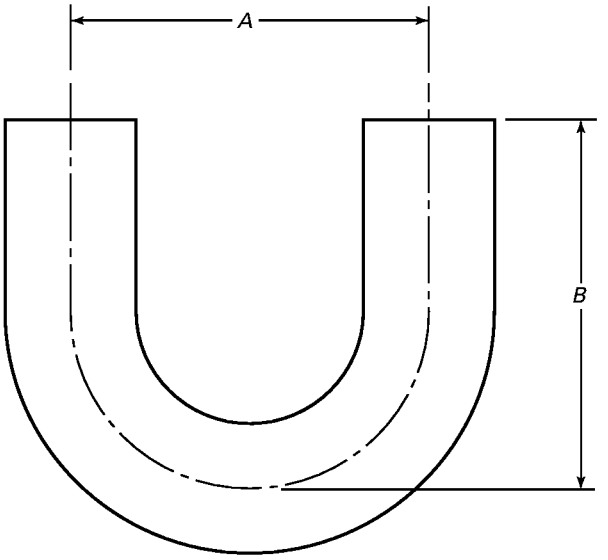

TABLE DT-23 AUTOMATIC TUBE WELD: 180 deg RETURN BEND (02) (a)

	A		*B*	
Nominal Size, in.	**in.**	**mm**	**in.**	**mm**
1/4	4.500	114.3	2.625	66.7
3/8	4.500	114.3	2.625	66.7
1/2	4.500	114.3	3.000	76.2
3/4	4.500	114.3	3.000	76.2
1	3.000	76.2	3.000	76.2
1 1/2	4.500	114.3	4.500	114.3
2	6.000	152.4	5.000	127.0
2 1/2	7.500	190.5	5.750	146.1
3	9.000	228.6	6.500	165.1
4	12.000	304.8	8.500	215.9
6	18.000	457.2	11.500	292.1

Copyright ASME International
Provided by IHS under license with ASME
No reproduction or networking permitted without license from IHS
Not for Resale

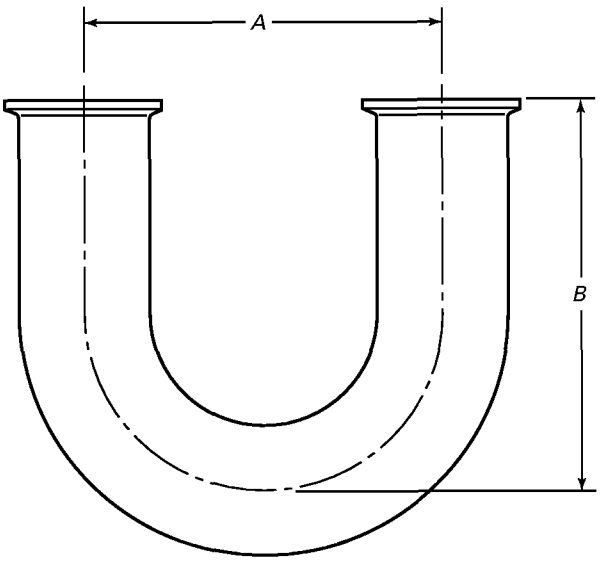

(02) (a) **TABLE DT-24 HYGIENIC CLAMP JOINT: 180 deg RETURN BEND**

Nominal Size, in.	A		B	
	in.	mm	in.	mm
1/4	4.500	114.3	3.125	79.4
3/8	4.500	114.3	3.125	79.4
1/2	4.500	114.3	3.500	88.9
3/4	4.500	114.3	3.500	88.9
1	3.000	76.2	3.500	88.9
1 1/2	4.500	114.3	5.000	127.0
2	6.000	152.4	5.500	139.7
2 1/2	7.500	190.5	6.250	158.8
3	9.000	228.6	7.000	177.8
4	12.000	304.8	9.125	231.8
6	18.000	457.2	13.000	330.2

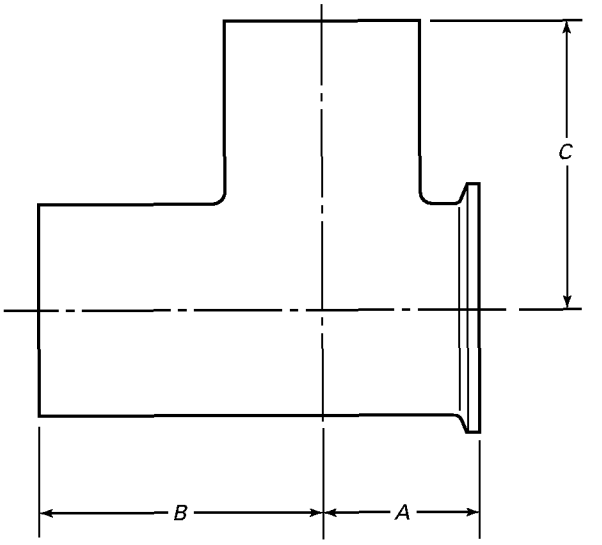

TABLE DT-25 HYGIENIC MECHANICAL JOINT: SHORT OUTLET RUN TEE (02)

Nominal Size, in.	A		B		C	
	in.	mm	in.	mm	in.	mm
1/4	0.875	22.2	1.750	44.5	1.750	44.5
3/8	0.875	22.2	1.750	44.5	1.750	44.5
1/2	0.875	22.2	1.875	47.6	1.875	47.6
3/4	1.000	25.4	2.000	50.8	2.000	50.8
1	1.125	28.6	2.125	54.0	2.125	54.0
1 1/2	1.375	34.9	2.375	60.3	2.375	60.3
2	1.625	41.3	2.875	73.0	2.875	73.0
2 1/2	1.875	47.6	3.125	79.4	3.125	79.4
3	2.125	54.0	3.375	85.7	3.375	85.7
4	2.750	69.9	4.125	104.8	4.125	104.8
6	4.625	117.5	5.625	142.9	5.625	142.9

--`,,`,`-`-`,,`,,`,`,,`---

Copyright ASME International
Provided by IHS under license with ASME
No reproduction or networking permitted without license from IHS
Not for Resale

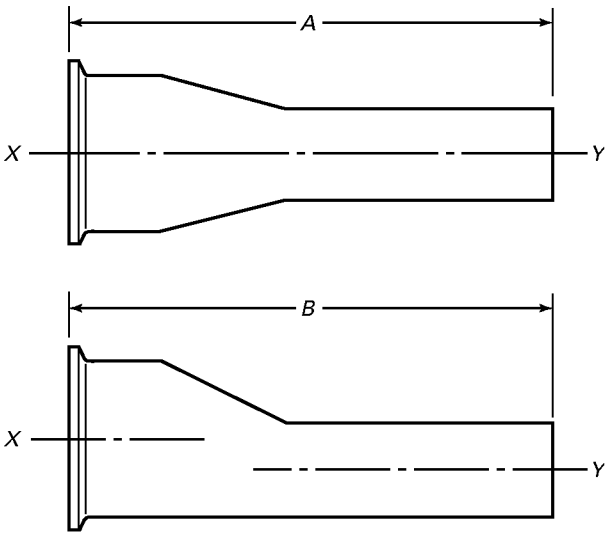

(02) (a) **TABLE DT-26 HYGIENIC CLAMP JOINT: TUBE WELD CONCENTRIC AND ECCENTRIC REDUCER**

Nominal Size, in.		A		B	
X	Y	in.	mm	in.	mm
3/4	1/2	3.000	76.2	3.000	76.2
1	1/2	3.500	88.9	3.500	88.9
1	3/4	3.000	76.2	3.000	76.2
1 1/2	1/2	4.500	114.3	4.500	114.3
1 1/2	3/4	4.000	101.6	4.000	101.6
1 1/2	1	4.000	101.6	4.000	101.6
2	1/2	6.500	165.1	6.500	165.1
2	3/4	6.000	152.4	6.000	152.4
2	1	6.000	152.4	6.000	152.4
2	1 1/2	4.000	101.6	4.000	101.6
2 1/2	1/2	8.500	215.9	8.500	215.9
2 1/2	3/4	8.000	203.2	8.000	203.2
2 1/2	1	8.000	203.2	8.000	203.2
2 1/2	1 1/2	6.000	152.4	6.000	152.4
2 1/2	2	4.250	107.9	4.250	108.0
3	1	10.000	254.0	10.000	254.0
3	1 1/2	8.000	203.2	8.000	203.2
3	2	6.250	158.8	6.250	158.8
3	2 1/2	4.250	108.0	4.250	108.0
4	1	14.125	358.8	14.125	358.8
4	1 1/2	12.125	308.0	12.125	308.0
4	2	10.375	263.5	10.375	263.5
4	2 1/2	8.375	212.7	8.375	212.7
4	3	6.375	161.9	6.375	161.9
6	3	9.000	228.6	8.750	222.3
6	4	9.000	228.6	9.000	228.6

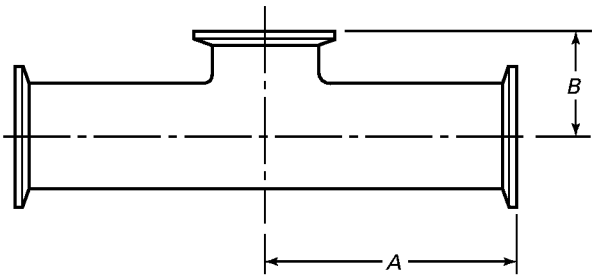

TABLE DT-27 HYGIENIC CLAMP JOINT: SHORT OUTLET TEE (02)

Nominal Size, in.	A		B	
	in.	mm	in.	mm
1/2	2.250	57.2	1.000	25.4
3/4	2.375	60.3	1.125	28.6
1	2.625	66.7	1.125	28.6
1 1/2	2.875	73.0	1.375	34.9
2	3.375	85.7	1.625	41.3
2 1/2	3.625	92.1	1.875	47.6
3	3.875	98.4	2.125	54.0
4	4.750	120.7	2.750	69.9
6	7.125	181.0	4.625	117.5

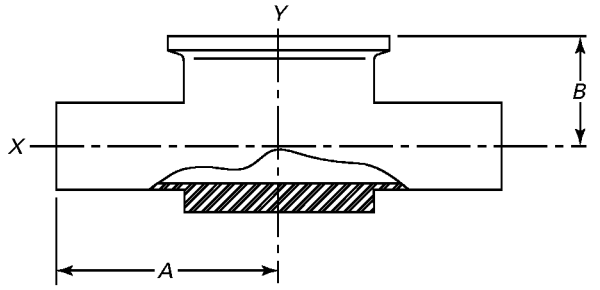

TABLE DT-28 AUTOMATIC TUBE WELD: INSTRUMENT TEE (02) (a)

Nominal Size, in.			A		B	
X		Y	in.	mm	in.	mm
1/2	×	1 1/2	2.500	63.5	0.875	22.2
3/4	×	1 1/2	2.500	63.5	1.000	25.4
1	×	1 1/2	2.500	63.5	1.125	28.6
1/2	×	2	2.750	69.9	1.000	25.4
3/4	×	2	2.750	69.9	1.125	28.6
1	×	2	2.750	69.9	1.250	31.8
1 1/2	×	2	2.750	69.9	1.500	38.1

Copyright ASME International
Provided by IHS under license with ASME
No reproduction or networking permitted without license from IHS
Not for Resale

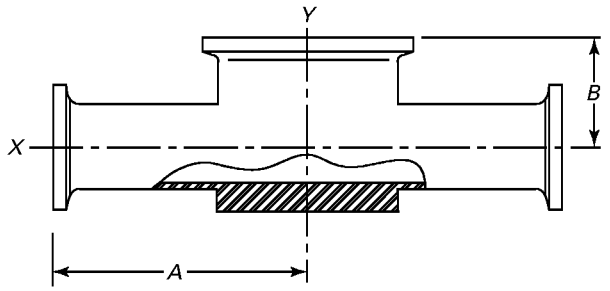

(02)
(a)

TABLE DT-29 HYGIENIC CLAMP JOINT: INSTRUMENT TEE

Nominal Size, in.			*A*		*B*	
X		***Y***	in.	mm	in.	mm
1/2	×	1 1/2	3.000	76.2	0.875	22.2
3/4	×	1 1/2	3.000	76.2	1.000	25.4
1	×	1 1/2	3.000	76.2	1.125	28.6
1/2	×	2	3.250	82.6	1.000	25.4
3/4	×	2	3.250	82.6	1.125	28.6
1	×	2	3.250	82.6	1.250	31.8
1 1/2	×	2	3.250	82.6	1.500	38.1

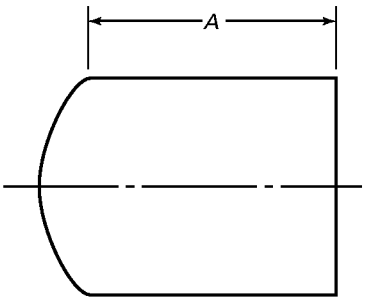

TABLE DT-30 AUTOMATIC TUBE WELD: CAP (02)

	A, Min. [Note (1)]	
Nominal Size, in.	in.	mm
1/2	1.500	38.1
3/4	1.500	38.1
1	1.500	38.1
1 1/2	1.500	38.1
2	1.500	38.1
2 1/2	1.500	38.1
3	1.750	44.5
4	2.000	50.8
6	2.500	63.5

NOTE:
(1) Per DT-4, minimum tangent length.

Copyright ASME International
Provided by IHS under license with ASME
No reproduction or networking permitted without license from IHS
Not for Resale

(a)

SUBSECTION DT-V
DIMENSIONS AND TOLERANCES FOR STAINLESS STEEL VALVES WITH AUTOMATIC WELDING AND HYGIENIC CLAMP TUBE ENDS

DT-V-1 SCOPE

This subsection describes the dimensions, tolerances, and markings for stainless steel valves and valve fabrications.

This subsection describes valves and valve fabrications made for use with nominal outside diameter (OD) tubing for the sizes listed in Table DT-1. The dimensions in metric units are conversions from the U.S. Customary units and are listed for reference only. For nominal metric size valves, please refer to the appropriate international standards.

DT-V-2 PRESSURE RATING

Valves manufactured to this subsection shall be per the manufacturer's marked pressure-temperature recommendations.

Fabricated components employing welds shall be rated at 100% of the ratings in the preceding paragraph. All welds shall meet the provisions of MJ-6 and Fig. MJ-1.

DT-V-3 MARKING

DT-V-3.1 Marking Information

Except as specified in DT-V-3.3, each valve shall be marked to show the following:

(a) heat number/code traceable to material test report for all wetted metal component parts of the valve or valve fabrication, if more than one heat is used

(b) valve pressure rating

(c) material type

(d) manufacturer's name, logo, or trademark

(e) reference to this Standard

(f) internal surface symbol for the appropriate BPE specification (Refer to Table SF-6)

DT-V-3.2 Method of Marking

The manufacturer's name or trademark, specification number, internal surface symbol, and heat numbers shall be permanently marked on the valve by any suitable method not injurious to the product contact surface of the valve.

DT-V-3.3 Exceptions

(a) Where the size of the valve does not permit complete marking, the identification marks may be omitted in reverse of the order presented in DT-V-3.2. However, the heat number, valve pressure rating, and material type must be marked on the valve.

(b) Where the size of the valve does not permit complete marking of the heat number, a manufacturer's code number is acceptable under this Standard.

DT-V-4 MATERIALS

Generally, materials furnished to this Standard shall be Type 316, Type 316L, or other material agreed to by the purchaser and manufacturer.

Where Type 316L is specified for valve bodies, materials shall be per ASTM A182, A240, A276, A479, A511, or A351 CF3M (316L). The material of the automatic weld end shall conform to the requirements for chemical composition as prescribed in Table DT-3. For nonautomatic weld ends, the chemical composition shall meet the requirements of the applicable ASTM specification.

DT-V-5 METAL THICKNESS

As valve and valve fabrications are to match tube, the thickness of the weld ends within the control portion must conform to the tolerances listed in Table DT-5 or DT-6. The nominal wall thickness of the valve ends shall be the same as the tube to which they are to be welded.

After fabrication and surface treatment, tube extension wall thickness, beyond the control portion, as defined in DT-8 shall be a minimum of 65% of the nominal wall thickness. For requirements regarding all shop and field welds, refer to part MJ.

DT-V-6 VALVE DIMENSION

The dimensions of the valve or valve fabrication shall conform to manufacturer's standards, or as agreed to by the purchaser and manufacturer.

Standard dimensions for valve weld end connections covered by this Standard are given in Table DT-1. All sizes shown are nominal OD tube sizes.

Copyright ASME International
Provided by IHS under license with ASME
No reproduction or networking permitted without license from IHS
Not for Resale

DT-V-7 TESTS

Hydrostatic testing of each valve or valve fabrication is not required in this Standard; however, valves or valve fabrications shall be capable of withstanding a hydrostatic test pressure of a minimum of 1.2 times the marked pressure rating of the valve, as qualified by SG-4.1.1.6.

DT-V-8 TOLERANCES

Tables DT-5 and DT-6 list the required tolerances for valve and valve fabrication weld ends covered by this Standard.

These tolerances shall apply after heat and surface treatment.

The control portion of the weld end of a valve is defined as the length from the welding end over which tolerances for wall thickness and OD are maintained. The length of the control portion is fixed for all sizes at .75 in. (19 mm), unless otherwise agreed upon by purchaser and manufacturer.

DT-V-9 WELDING ENDS

Valves with weld ends furnished to this Standard shall be furnished with square-cut ends, free from burrs and breaks.

DT-V-10 HYGIENIC CLAMP ENDS

Valves furnished to this Standard with hygienic clamp ends shall employ a design that meets the requirements of this Standard.

DT-V-11 SURFACE CONDITION

The internal and external surfaces of valves and valve fabrications furnished to this Standard may be finished using any combination of mechanical polishing, chemical polishing, and electropolishing at the request of the purchaser, conforming with applicable sections of Part SF. Internal and external surfaces of valves and valve fabrications furnished to this Standard shall be cleaned to remove oils, grease, particulates, and grinding compounds or electrolytes.

Copyright ASME International
Provided by IHS under license with ASME
No reproduction or networking permitted without license from IHS
Not for Resale

PART MJ
MATERIAL JOINING

(a) MJ-1 SCOPE

The requirements of this Part are applicable to the joining of equipment used in the bioprocessing, pharmaceutical, and personal care product industries, including pressure vessels and tanks [which includes heat exchangers, atmospheric tanks, pumps, and any vessels designed and built to the ASME Boiler and Pressure Vessel Code (BPVC), Section VIII, Division 1], piping (built to ASME B31.3), tubing, and fittings, and shall be used in conjunction with the requirements of ASME BPVC, Sections VIII and IX, and ASME B31.3, as applicable. These materials, joining methods, examinations, etc., are limited to process systems that contact bioprocessing products or product-process streams.

MJ-2 MATERIALS

(a) MJ-2.1 Stainless Steels

Material for process surfaces shall conform to AISI 316L (UNS S31603) and a published ASTM or other recognized specification, unless otherwise agreed to by the purchaser and supplier. All materials (tubing and fittings) shall conform with Table DT-3. However, a process component or tube with a sulfur content either below the lower limit or above the upper limit of Table DT-3 can be used in a welded connection, provided that all of the following conditions are met:

(a) Use of the process component or tube is agreed to by the owner/user.

(b) The process component or tube meets 0.030 wt. % max. sulfur limit.

(c) The process component or tube meets all other requirements of Table DT-3.

(d) All welds on the component or tube are internally inspected and meet the requirements of MJ-6.4.

Material for supporting structures shall conform to AISI 304 or 304L (UNS S30400 or S30403) unless otherwise agreed to by the purchaser and supplier.

MJ-2.2 Nickel Alloys

The use of nickel alloys shall be subject to agreement by the purchaser and supplier. The alloy shall conform to a published ASTM or other recognized specification. It is recommended that weld and finish samples be made from the actual heat or lot of material in question, in order to guarantee the desired results.

MJ-2.3 Mechanically Polished Material

Mechanically polished material shall be ready for welding, i.e., free of grit and residues. Polished material shall meet the dimensional tolerances of the applicable specifications, and the surface finish requirements of this Standard, after polishing has been completed.

MJ-2.4 Electropolished Material

Electropolished material shall be ready for welding and shall be free of chemical residues and water stains. Surfaces shall meet the surface finish requirements of Part SF for stainless steel or higher alloys.

MJ-2.5 Other Materials

Other materials (for example, titanium, tantalum, thermoplastic, and glass) may be used, based upon agreement by owner/user and contractor.

MJ-2.6 Weld and Finish Samples (02)

Weld and finish samples, when required, shall be made from the same material specification and grade to be used in production in order to demonstrate the desired results.

MJ-3 JOINING PROCESSES AND PROCEDURES

MJ-3.1 Welds Finished After Welding

For pressure vessels, tanks, and piping and tubing systems where the process-contact surface of the weld is to be finished after welding, the welding processes used shall be limited to the arc or high energy beam (electron beam and laser beam) processes as defined in ANSI/AWS A3.0. All welding procedures must be qualified per MJ-8 of this Standard. The owner/user

Copyright ASME International
Provided by IHS under license with ASME
No reproduction or networking permitted without license from IHS
Not for Resale

and contractor shall agree that the welding process selected will provide the desired results.

MJ-3.2 Welds Used in the As-Welded Condition

For pressure vessels, tanks, and piping and tubing systems where the process-contact surface of the weld is to be used as is, welding processes shall be limited to the inert-gas arc processes (such as gas tungsten-arc welding and plasma arc welding) or the high energy beam processes (such as electron beam or laser beam welding), as defined in ANSI/AWS A3.0. All welding procedures must be qualified per MJ-8 of this Standard. Every effort shall be made to use an automatic or machine welding process. Autogenous welds, welds with filler wire, or consumable inserts are acceptable for this Standard provided they meet the requirements for all applicable codes. The owner/user and contractor shall agree that the welding process selected will provide the desired results.

MJ-3.3 Nonmetallics

Joining of nonmetallic materials (e.g., glass, rubber, ceramics, and plastics) shall be in accordance with procedures and processes recommended by the material manufacturer, and approved by the owner/user, using materials or compounds that are inert to the intended service.

MJ-3.4 Mechanical Connections

Mechanical connections shall conform to SD-3.7.

MJ-4 WELD JOINT DESIGN AND PREPARATION

(a) MJ-4.1 General

All butt joints in which one or both weld faces is a product contact surface shall have continuous complete weld joint penetration. This requirement exists for welds made from either one side or from both sides of the weld joint. All weld joints must have the product contact surfaces properly purged or protected for the prevention of discoloration or contamination. External attachments (e.g., lift lugs, dimple jackets, ladder clips, etc.) must have any discoloration of the product contact surface removed.

Welds attaching any connection that passes through the wall of a tank or vessel, or a branch connection on a pipe or tube system, in which one or both sides of the weld joint is a product contact surface, shall either be joined with a full penetration groove weld with a reinforcing fillet weld [similar to Fig. SD-14 (a)], or have at least one telltale hole provided if double fillet welded only [similar to Fig. SD-14 (b)]. A telltale hole is required on all lap, tee, corner, or edge joints that have one or both welds as a product contact surface and are not attached by full penetration welds. The telltale hole shall provide a path for product or test media flow in the event of inner weld containment failure. Telltale holes are not required when all welds are on product contact surfaces, (e.g., Fig. SD-17(d) detail or similar). The telltale hole shall be no larger than NPS ¼ in. (6.35 mm) and may be tapped for a preliminary compressed air and soapsuds test for tightness of inside welds. These telltale holes may be plugged when the vessel is in service. The plugging material used shall not be capable of sustaining pressure between the lapped surfaces.

Socket welding is not permitted in process stream systems or where CIP or SIP requirements are defined.

MJ-4.2 Pressure Vessels and Tanks

Joint designs shall be those permitted by ASME BPVC, Section VIII, and shall comply with MJ-4.1.

MJ-4.3 Piping

Joint designs shall be those permitted by ASME B31.3, and shall comply with MJ-4.1.

MJ-4.4 Tubing

Joint designs for hygienic tubing and fittings shall be square butt joints. The tubing and fittings shall have ends prepared by machining or facing to provide a square end that meets the requirements of Tables DT-5 and DT-6. The butt weld joints shall be properly cleaned within ½ in. of the joint area on the inside and outside surfaces prior to welding. Welding on tubing shall be done using automatic (or machine) welding techniques (such as orbital tube welding or lathe welding), except where size or space will not permit. In that case, manual welding can be performed, but must be agreed to by the owner/user and contractor.

MJ-5 FILLER MATERIAL

Filler material shall conform to a published AWS specification, or to a proprietary specification agreed to between the filler manufacturer, equipment supplier, and end owner/user. Proprietary fillers require special attention; see MJ-8 of this Standard and QW-250 and QW-350 of ASME BPVC, Section IX. Filler metals

Copyright ASME International
Provided by IHS under license with ASME
No reproduction or networking permitted without license from IHS
Not for Resale

may be in the form of welding wire, consumable inserts, or other shapes or forms.

Appropriate filler metals shall be used, as recommended by the manufacturers. For stainless steel base metals, only low carbon grades of stainless steel filler metals shall be used (e.g., for 316L base metal only 316L or 316LSi filler metal shall be used; for 304L base metal 308L or 316L filler metals shall be used). Stainless steel or nickel alloy with high molybdenum content may require special filler metals. The base metal manufacturer should be consulted.

MJ-6 WELD ACCEPTANCE CRITERIA

(02) MJ-6.1 General

Welding for a sterile environment requires that the weld shall not result in a surface that will contribute to microbiological growth and contamination of the product. The weld shall not have any discontinuities such as cracks, voids, porosity, or joint misalignment that will promote contamination of the product. All welding procedures shall be qualified to MJ-8.

MJ-6.2 Pressure Vessels and Tanks

Weld acceptance criteria for pressure vessels and tanks shall be in accordance with ASME BPVC, Section VIII, Division 1.

(02) MJ-6.3 Piping

Weld acceptance criteria for piping shall be in accordance with ASME B31.3, paras. 341.3.2 through 341.3.4 and Table 341.3.2, along with the criterion value notes for Table 341.3.2 for pipe welds.

(02) MJ-6.4 Tubing

(a) Visual weld acceptance criteria (including borescopic acceptance criteria) for hygienic tubing and fittings that are internally and externally inspected shall be in accordance with the weld acceptance criteria of MJ-6 (see Fig. MJ-1).

Preproduction sample welds, when required, shall be submitted by the contractor to the owner/user to establish weld quality. Owner/user, contractor, and inspection contractor shall agree to the number and type of sample welds.

During construction, sample welds shall be made on a regular basis to verify that the equipment is operating properly and that the purging setup is adequate to prevent discoloration beyond the level agreed upon by the owner/user and contractor. Owner/user and contractor shall agree to the frequency of sample welds. It is strongly recommended that these sample welds be made at the beginning of each work shift, whenever the purge source bottle is changed, and when the automatic or machine welding equipment is changed (such as when the orbital tube weld head is changed).

The sample welds described in the preceding paragraphs, and any associated welding machine printed records (e.g., welding parameter printouts directly from welding machine or downloaded from a welding machine), if any, may be disposed of after written acceptance of the coupons by the owner, the owner's representative, or the inspector.

MJ-6.4.1 Fit-up and Mismatch. (02) Tubing shall be aligned so as to prevent hold-up volume areas that would contribute to contamination of the product. The maximum misalignment is 15% of nominal wall thickness [see Fig. MJ-1(b)]. In the case of two different wall thicknesses, maximum misalignment shall be governed by the wall thickness of the thinner tube.

MJ-6.4.2 Concavity

(a) Maximum outside diameter (OD) concavity shall be limited to 10% of the nominal wall thickness over the entire circumference with 15% of the nominal wall thickness permitted over a maximum total of 25% of the circumference [see Fig. MJ-1(c)].

(b) (02) Maximum inside diameter (ID) concavity shall be limited to 10% of the nominal wall [see Fig. MJ-1(d)]. In any case, OD and ID concavity shall be such that the wall thickness is not reduced to less than the minimum thickness required in DT-5. In the case of two different wall thicknesses, maximum concavity shall be governed by the wall thickness of the thinner tube.

MJ-6.4.3 Convexity. (02) Inside diameter convexity is limited to 10% of the nominal wall thickness. Outside diameter convexity is limited to 0.015 in. [see Fig. MJ-1(f)]. In the case of two different wall thicknesses, maximum OD or ID convexity shall be governed by the wall thickness of the thinner tube.

MJ-6.4.4 Weld Penetration. (a) All butt welds shall be full penetration to the ID of the wall thickness [see Figs. MJ-1(a) and MJ-1(e)]. In the case of two different wall thicknesses, the weld shall penetrate to the ID of the thickest wall.

MJ-6.4.5 Tack Welds. (a) Tack welds must be fully consumed on the product contact surface. Any welds which show unconsumed tack welds on the OD surface

Copyright ASME International
Provided by IHS under license with ASME
No reproduction or networking permitted without license from IHS
Not for Resale



(a) Acceptable

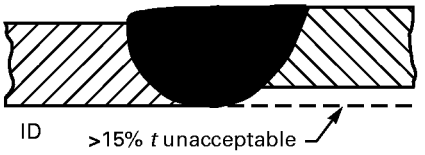

(b) Misalignment (Mismatch)

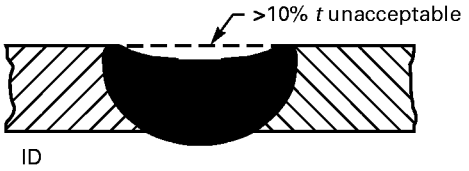

(c) OD Concavity

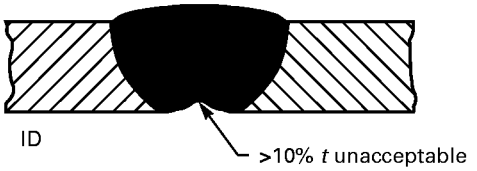

(d) ID Concavity (Suckback)

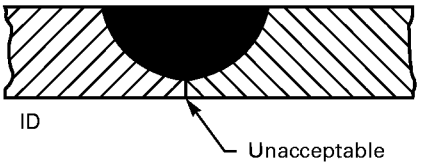

(e) Lack of Penetration: None Allowed

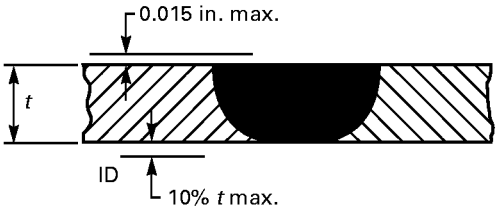

(f) Convexity

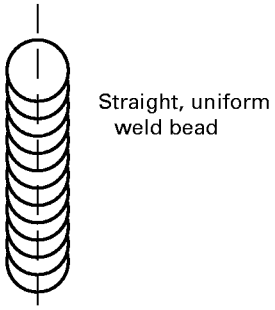

(g) Acceptable Weld Bead

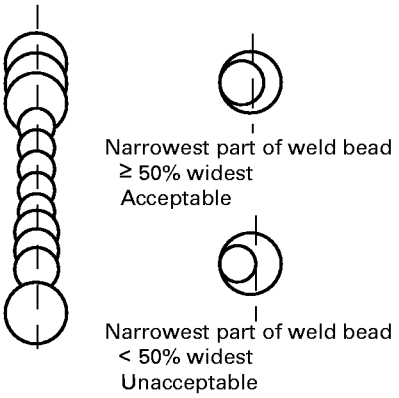

(h) Excessive Weld Bead Width Variation

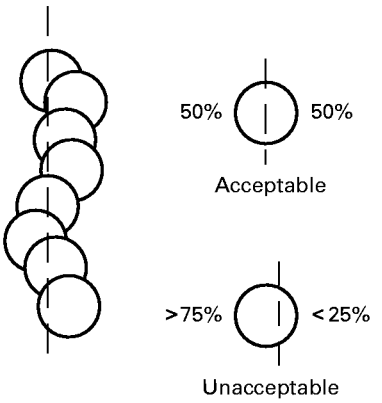

(i) Excessive Weld Bead Meander

FIG. MJ-1 ACCEPTABLE AND UNACCEPTABLE WELD PROFILES FOR TUBE WELDS (a)

Copyright ASME International
Provided by IHS under license with ASME
No reproduction or networking permitted without license from IHS Not for Resale

must be internally inspected; otherwise they are rejected. If the weld cannot be inspected internally, rewelding per MJ-6.4.10 (a) is not allowed. Rewelding per MJ-6.4.10 (a) is allowed if weld can be internally inspected after rewelding.

(02) (a) **MJ-6.4.6 Discoloration.** Discoloration shall be minimized on all process surfaces. The weld bead shall be free of discoloration on the ID. However, a slight discoloration (light straw or light blue color, or hueing) may be permitted in the heat-affected zone. This discoloration level shall be determined by the owner/user and contractor. Any discoloration that is acceptable shall be tight to the surface and unable to be removed during normal operation. Depending on the surface finish, it may not be possible to totally eliminate discoloration. For this purpose, AWS D18.2 can be used as a guide. Typically, Sample 4 and above have been considered unacceptable. For all conditions, the weld and heat affected zone shall have no evidence of rust, free iron, or sugaring.

(a) **MJ-6.4.7 Tungsten Inclusions.** Tungsten inclusions shall meet the requirements of ASME B31.3.

(a) **MJ-6.4.8 Arc Strikes.** Arc strikes are not permitted. They may be removed by mechanical polishing as long as the minimum design wall thickness is not compromised.

(02) (a) **MJ-6.4.9 Weld Bead Width**

(a) Inside Diameter. Inside diameter weld bead width shall not be the sole criterion for rejection. A typical internal bead width of 1.5 times the nominal wall thickness has been acceptable.

(b) Outside Diameter. This subparagraph only applies to welds not accessible to internal inspection. The exterior of the weld bead shall be straight and uniform around the entire weld circumference [see Fig. MJ-1(g)]. The minimum weld bead width shall not be less than 50% of the maximum weld bead width [see Fig. MJ-1(h)]. The maximum weld bead meander shall be 25% of the weld bead width, measured as deviation from the weld centerline [see Fig. MJ-1(i)].

(a) **MJ-6.4.10 Weld Defects**

(a) Rewelding (reflow) may be attempted, one time only, for the following defects:

(1) lack of penetration

(2) lack of fusion

(3) unconsumed tack welds that can be internally inspected (refer to MJ-6.4.5)

(b) The following defects shall be either cut out or repaired at the discretion of the owner/user:

(1) cracks

(2) undercut

(3) crater crack

(4) burn-through

(5) icicles

(6) porosity

(7) arc strikes as determined in MJ-6.4.8

(8) discoloration as determined in MJ-6.4.6

(9) OD convexity as determined in MJ-6.4.3

(10) OD concavity as determined in MJ-6.4.2

(11) ID concavity as determined in MJ-6.4.2

(12) ID convexity as determined in MJ-6.4.3

MJ-6.5 Sample Welds (02) (a)

Sample welds for tubing shall meet all the acceptance criteria of MJ-6.4, except that the requirements of MJ-6.4.9(a) and (b) both apply.

MJ-7 INSPECTION, EXAMINATION, AND TESTING

MJ-7.1 Scope

These paragraphs provide for the inspection/examination of bioprocessing equipment and components including pressure vessels, tanks, skids, pumps, piping, tubing, fittings, and clamps. Examination methods, terms, and definitions shall be as defined in Part GR of this Standard and in other existing recognized codes and standards, including ASME BPVC, Section VIII, Division 1; ASME B31.3; and AWS-QC1 and SNT-TC-1A requirements for examiner and inspector certifications.

MJ-7.2 Types of Examinations (02)

Owner/user, contractor, inspection contractor, and/or engineer shall agree to the types of examinations, unless otherwise specified in the applicable code.

MJ-7.2.1 Pressure Vessels and Tanks. Examinations including visual, liquid penetrant, radiographic, and ultrasonic shall be performed in accordance with the provisions of ASME BPVC, Section VIII, Division 1. Fabricators of tanks and pressure vessels must visually examine all welds on product contact surfaces. Personnel performing examinations of pressure vessels and tanks designed to ASME BPVC, Section VIII, Division 1, shall meet requirements of the appropriate section of that Code. (a)

Copyright ASME International
Provided by IHS under license with ASME
No reproduction or networking permitted without license from IHS
Not for Resale

(a) **MJ-7.2.2 Piping.** Examinations including visual and any special method (as defined in ASME B31.3, Chapter VI, para. 344.1.2) shall be performed in accordance with the provisions of ASME B31.3, Section 344. Personnel performing examinations of piping systems shall meet the requirements of ASME B31.3, para. 342.1, Personnel Qualification and Certification, and 342.2, Specific Requirement.

Owner/user, installing contractor, inspection contractor and/or engineer shall agree to the minimum percentage of product contact welds to be selected for visual examination. The contractor shall submit an inspection plan to ensure that welds meet the acceptance criteria of this Part. This plan shall include borescopic or direct visual inspection of the product contact surfaces on a minimum percentage of welds agreed to by the owner/user and contractor. In no case shall this minimum percentage be less than 20% of each system installed. A representative sample of each welder or welding operator's work must be included. The inspection required for compliance with ASME B31.3 may be included in the minimum percentage provided those inspections were direct visual or borescopic and of the product contact surface.

(02) (a) **MJ-7.2.3 Tubing.** Examinations including visual, liquid penetrant, radiographic, ultrasonic, and any supplementary examinations (as defined in ASME B31.3, Chapter VI, para. 344.1.2) shall be performed in accordance with the provisions of ASME B31.3, Section 344. The external surfaces of all welds shall be visually examined. This Standard does not require radiography unless specified by the owner/user or other applicable code.

Personnel performing examinations of tubing systems shall meet the requirements of ASME B31.3, para. 342.1, Personnel Qualification and Certification and 342.2, Specific Requirement.

Owner/user, installing contractor, inspection contractor, and/or engineer shall agree to the minimum percentage of welds to be selected for borescopic or other internal visual examination. The contractor shall submit an inspection plan to ensure that welds meet the acceptance criteria of this Part. This plan shall include borescopic or direct visual inspection of the internal surfaces of an agreed-to minimum percentage of welds by the owner/user and contractor, but a minimum of 20% of all welds shall be randomly selected in each separate system. A procedure shall also be submitted for examining blind welds. The random selection of the accessible welds to be examined shall be up to the owner/user's inspector's discretion. There shall also be a plan for checking each operator's first shift of production.

At the owner/user's discretion, personnel performing borescopic examinations or other internal visual examinations shall meet the requirements of ASME B31.3, paras. 340.4, 342.1, and 342.2. Personnel performing these inspections may also be certified as Level II or III visual inspectors in accordance with the latest edition of SNT-TC-1A or possess a current AWS-QC1 Certified Welding Inspector certification.

MJ-7.3 Examination Procedures

MJ-7.3.1 Pressure Vessels and Tanks. Examination procedures for pressure vessels and tanks shall be in accordance with ASME BPVC, Section VIII, Division 1.

MJ-7.3.2 Piping. Examination procedures for piping systems shall be in accordance with the requirements of ASME B31.3, para. 343.

MJ-7.3.3 Tubing. Examination procedures for tubing systems shall be in accordance with the requirements of ASME B31.3, para. 343.

MJ-7.4 Supplementary Examinations

The execution of supplementary examinations and testing (such as borescopic and surface finish) for any system shall be in accordance with ASME B31.3, para. 341.5.

MJ-7.5 Testing

MJ-7.5.1 Pressure Vessels and Tanks. Testing of pressure vessels designed to code specifications shall be performed in accordance with ASME BPVC, Section VIII, para. UG-99 or UG-100.

MJ-7.5.2 Piping. Hydrostatic or pneumatic testing of piping systems shall be performed in accordance with ASME B31.3, Chapter VI, Section 345.

MJ-7.5.3 Tubing. Hydrostatic or pneumatic testing of tubing systems shall be performed in accordance with ASME B31.3, Chapter VI, Section 345.

MJ-7.6 Records

MJ-7.6.1 Pressure Vessels and Tanks. Records and retention of records for code vessels shall be in accordance with ASME BPVC, Section VIII, paras.

Copyright ASME International
Provided by IHS under license with ASME
No reproduction or networking permitted without license from IHS
Not for Resale

UW-51 for radiographs, UG-120 for manufacturer's data reports, and UW-52 for spot examination of welds.

MJ-7.6.2 Piping. Records and retention of records associated with piping shall be in accordance with ASME B31.3, Chapter VI, Section 346.

MJ-7.6.3 Tubing. Records and retention of records associated with hygienic tubing shall be in accordance with ASME B31.3, Chapter VI, Section 346.

MJ-8 PROCEDURE QUALIFICATION

MJ-8.1 Pressure Vessels and Tanks

Welding procedures for pressure vessels and tanks shall be qualified in accordance with ASME BPVC, Section IX, plus any supplementary requirements in the specific code section under which the vessels or tanks are designed.

MJ-8.2 Piping

Welding procedures for piping systems shall be qualified in accordance with ASME BPVC, Section IX, plus any supplementary requirements in ASME B31.3.

MJ-8.3 Tubing

Welding procedures for machine or automatic or manual gas tungsten-arc welding of hygienic tubing systems shall be qualified in accordance with ASME BPVC, Section IX, with the following additions:

(a) A change in the type or nominal composition of the backing (purge) gas shall require requalification (see QW-250).

(b) A change from one AWS classification of filler metal to another, or to a proprietary filler metal, shall require requalification (see QW-250).

MJ-9 PERFORMANCE QUALIFICATION

MJ-9.1 Pressure Vessels and Tanks

Welder and welding operator performance qualifications for pressure vessels and tanks shall be in accordance with ASME BPVC, Section IX.

MJ-9.2 Piping

Welder and welding operator performance qualifications for piping systems shall be in accordance with ASME BPVC, Section IX.

MJ-9.3 Tubing

Welder and welding operator performance qualifications for manual or machine or automatic gas tungsten-arc welding of hygienic tubing systems shall be in accordance with ASME BPVC, Section IX.

MJ-10 DOCUMENTATION REQUIREMENTS (02) (a)

For cGMP-validated bioprocessing distribution systems (including modules, super skids, skids, shop, or field fabrication of tubing, etc.) the following documentation shall be provided to the owner/user or his/her designee, as a minimum:

(a) Welding Qualification Documentation
- *(1)* Welding Procedure Specifications (WPS)
- *(2)* Procedure Qualification Records (PQR)
- *(3)* Welder Performance Qualifications (WPQ)
- *(4)* Welding Operator Performance Qualifications (WOPQ)

and documentation of approval of the preceding by the owner's representative prior to welding

(b) Weld Maps

(c) Materials
- *(1)* Material Test Reports (MTRs)
- *(2)* Certificates of Compliance (C of Cs)
- *(3)* Material Inspection Logs

(d) Testing Documentation (as applicable)
- *(1)* Passivation Reports
- *(2)* Sprayball Testing
- *(3)* Pressure Testing

At the owner/user's discretion, the following documentation shall be provided to the owner/user:

(a) Weld Logs

(b) Weld Inspection Logs

(c) Coupon Logs

(d) Purge Gas Certifications

(e) Inspector and Examiner Qualifications

(f) Slope Check Documentation

(g) Calibration Logs

(h) Signature Logs

(i) Number of Welds — both Manual and Automatic

(j) Number of Welds Inspected expressed as a percentage (%)

(k) Heat Numbers of components must be identified, documented, and fully traceable to the installed system

MJ-11 PASSIVATION

If agreed to by the owner/user and the manufacturer, all welded systems shall be passivated after cleaning and prior to use.

Copyright ASME International
Provided by IHS under license with ASME
No reproduction or networking permitted without license from IHS
Not for Resale

PART SF
STAINLESS STEEL AND HIGHER ALLOY INTERIOR SURFACE FINISHES

SF-1 SCOPE

The purpose of this Part is to provide criteria of interior surface finishes for bioprocessing equipment and distribution system components. This Part shall be referenced when specifying interior finishes for the specific systems, including, but not limited to, vessels and distribution system components.

SF-2 OBJECTIVE

The objective is to describe an acceptable interior surface finish on selected materials of construction to enhance their cleaning and sterilization.

SF-3 APPLICATIONS

This Standard shall be applicable to all systems designated by the owner/user or his/her representative. These systems may include, but are not limited to, one or more of the following:

(a) USP, Water-for-Injection (WFI);

(b) USP, Purified Water;

(02) *(c)* USP, Clean and Pure Steam; and

(d) other product/process contact surface systems.

These interior surface requirements shall apply to all accessible and inaccessible areas of the systems that directly or indirectly come in contact with the designated product.

SF-4 MATERIAL

The preferred material of construction for these systems is austenitic stainless steel, type 316L alloy. Other materials may be specified by the owner/user. They may be of the following form:

(a) Tubing. ASTM A 213/A 213M, ASTM A 269, ASTM A 270;

(b) Piping. ASTM A 312;

(c) Fittings. To be made to the tube and/or pipe fitting specifications shown in Part GR;

(d) Plate, Sheet, and Strip. ASTM A 240/A 240M, ASTM A 666.

(e) Forged Wrought and Casting. ASTM A 182 Gr 316L, ASTM A 351 Gr CF 3M, and ASTM A 484/A 484M.

SF-5 TYPICAL STAINLESS STEEL INTERIOR SURFACE ANOMALY CHARACTERISTICS

Surface anomalies can be classified into two general categories:

(a) Type 1. Surface anomalies caused by the chemical composition and quality of the material. Examples of these anomalies are:

(1) inclusions;

(2) variation in alloying elements; and

(3) welding slag. (02)

(b) Type 2. Surface anomalies caused by inadequate control of the associated process operations. Examples of these processes and the anomalies they create are:

(1) mechanical grinding and polishing:

(a) scratches, dents, nicks; and

(b) nonuniform surface finishes.

(2) welding:

(a) surface oxides and discoloration;

(b) undercut, protrusions; (02)

(c) improper weld conditioning such as grinding, forging, and cleaning; and

(d) welding slag. (02)

(3) Other surface treatment processes that utilize chemicals and/or electrochemicals:

(a) overetching;

(b) localized corrosion by inadequate removal of residuals; and

(c) staining, ionic bonding.

SF-6 CLASSIFICATION OF INTERIOR SURFACE FINISHES ON WELDMENTS FOR PROCESS EQUIPMENT AND COMPONENTS

The following are classifications of the interior weld finishes that are applicable for process equipment and components. (02)

Copyright ASME International
Provided by IHS under license with ASME
No reproduction or networking permitted without license from IHS
Not for Resale

(02)
(a)

TABLE SF-1 ACCEPTANCE CRITERIA FOR INTERIOR SURFACE FINISHES OF TUBING

Anomaly or Indication	Acceptance Criteria
Cluster of pits	No more than 4 pits per each ½ in. x ½ in. inspection window. The cumulative total of all relevant pits shall not exceed 0.040 in.
Demarcation	If longer dimension is less than the tube diameter and R_a max. increases <50%.
Dents	None accepted.
Grit lines	If R_a max. is met.
Longitudinal welds	If polished smooth, blended, and R_a, max. is met.
Nicks	None accepted.
Pits	If diameter <0.020 in. and bottom is shiny [Note (1)]. Pits <0.003 in. diameter are irrelevant and acceptable.
Scratches [Note (2)]	If depth <0.003 in.
Star burst	If <75% of the width of the weld bead.
Surface cracks	None accepted.
Surface inclusions	If R_a max. is met.
Surface residuals	None accepted, visual inspection.
Surface roughness (R_a)	See Table SF-2.
Weld slag (per tube length)	Up to 3, if <75% of the width of the weld bead [Note (3)].
Weld porosity	If no liquid penetrant indication.

NOTES:
(1) Black bottom pit of any depth is not acceptable.
(2) 12 in. of cumulative length per tube length.
(3) Tube length is 20 ft.

(a) Class 1. Welds are to be ground smooth and flush. Visual pits and weld defects are removed.

(b) Class 2. Welds are ground smooth but not flush. The upper surface of the bead is removed, but visual pits and weld defects are not removed.

(c) Class 3. Welds as welded, no grinding.

(a)

SF-7 INSPECTION AND TECHNIQUES EMPLOYED IN THE CLASSIFICATION OF INTERIOR SURFACE FINISHES

Interior surface finish inspections are made by one or more of the following methods:

(a) Visual Inspection
(1) borescope
(2) wide field optical microscopes

(b) Liquid Penetrant

(c) Profilometer

(d) Scanning Electron Microscopy

(e) Electron Spectroscopy for Chemical Analysis

(f) Auger Electrospectroscopy for Chemical Analysis

Refer to Tables SF-1 through SF-10 for the acceptance criteria for interior surface finish.

SF-8 DESCRIPTION OF VARIOUS SURFACES AVAILABLE ON STAINLESS STEEL AND HIGHER ALLOYS (02) (a)

The following surface finishes may be on the interior as well as the exterior surfaces. These are general definitions and terminologies. They may not be applicable in all cases. The final criteria shall be determined by the R_a values in the following tables rather than the polishing method.

(a) Piping, Tubing, and Fittings
(1) as fabricated
(2) pickled and/or passivated
(3) bright hydrogen annealed
(4) mechanically polished
(5) mechanically buffed [refer to (b)(10)]
(6) chemically polished
(7) electropolished

(b) Sheet, Strip, and Plate

(1) As Fabricated. Without any specific surface treatments.

(2) Rolled Finish. Manufactured by either hot or cold rolled process.

(3) No. 1. A dull, hot rolled finish, annealed and pickled.

Copyright ASME International
Provided by IHS under license with ASME
No reproduction or networking permitted without license from IHS
Not for Resale

(02)
(a)

TABLE SF-2 R_a READINGS FOR TUBING

Surface Designation	As Drawn and/or Mechanically Polished [Note (1)] R_a Max. µ-in.	µm
SFT1	20	0.5
SFT2	25	0.625
SFT3	30	0.75
	Mechanically Polished and Electropolished, or Electropolished R_a **Max.**	
	µ-in.	**µm**
SFT4	15	0.375
SFT5	20	0.5
SFT6	25	0.625

GENERAL NOTES:
(a) All R_a readings are taken across the lay, wherever possible.
(b) No single R_a reading shall exceed the R_a max. value in this table.
(c) Other R_a readings are available if agreed upon between owner/user and manufacturer not to exceed values in this table.

NOTE:
(1) Or any other finishing method that meets the R_a max.

(4) No. 2D. A dull, cold rolled finish, annealed and pickled.

(5) No. 2B. A bright, cold rolled finish, annealed and pickled.

(6) No. 4. A general-purpose polished finish widely used for architectural panels, trim, and sanitary equipment. Following initial grinding with coarser abrasives, the surface is finally finished with lubricated 150 mesh abrasives belts.

(7) No. 4S. Processed as No. 4 except the final surface is polished to a smoother finish. This alternative finish must be specified by the purchaser; the specification must state a No. 4 finish, using a 240 or 320 grit mechanical polish, whose particular surface roughness must meet the specified R_a value.

(8) No. 6. A dull finish having a lower reflectivity than No. 4. It is produced by a tampico brushing in a medium of abrasive and oil and is used primarily for architectural application.

(9) No. 7. A finish with a high degree of reflectivity, produced by buffing to a finely ground surface without removing the grit lines.

(10) No. 8. The most reflective finish, obtained by polishing with successively finer abrasives and buffing extensively with very fine water soluble buffing rouges. The surface is essentially free of grit lines from primary grinding operations. This finish is most widely used for press plates, mirrors, etc. This finish can be produced on one side only; the other side may be rough ground in order to obtain the necessary flatness.

In fabricating, every effort shall be made to protect the mill finish while the material is in storage or being processed.

(c) Wrought and Cast Forgings. These items are available in one of the following, or a combination of surface finishes:

(1) as fabricated or machined

(2) mechanically ground, polished, or buffed

(3) abrasive blast cleaned, using one of the following methods:

(a) sand blast
(b) shot blast
(c) glass blast
(d) wet blast

(4) slurry polished

(5) roll deburred

(6) chemically cleaned

(a) acid washed (pickled and passivated)
(b) solvent washed

(7) electropolished

Copyright ASME International
Provided by IHS under license with ASME
No reproduction or networking permitted without license from IHS
Not for Resale

(02)
(a)

TABLE SF-3 ACCEPTANCE CRITERIA FOR INTERIOR SURFACE FINISHES OF FITTINGS

Anomaly or Indication	Acceptance Criteria
Cluster of pits	No more than 4 pits per each ½ in. x ½ in. inspection window. The cumulative total of all relevant pits shall not exceed 0.040 in.
Demarcation	If <5% of the total area when visually inspected and R_a, max. is met.
Dents	None accepted.
Grit lines	If R_a, max. is met.
Longitudinal welds	If polished smooth, blended, and R_a, max. is met.
Nicks	None accepted.
Pits	If diameter <0.020 in. and bottom is shiny. Pits <0.003 in. diameter are irrelevant and acceptable.
Scratches	If length <0.25 in., depth <0.003 in., and R_a, max. is met.
Star burst	None accepted.
Surface cracks	None accepted.
Surface inclusions	If R_a, max. is met and there is no liquid penetrant indication.
Surface residuals	None accepted, visual inspection.
Surface roughness (R_a)	See Table SF-4.
Weld slag	None accepted.
Weld porosity	None accepted.

(02)
(a)

TABLE SF-4 R_a READINGS FOR FITTINGS

Surface Designation	Mechanically Polished [Note (1)] R_a, Max. µ-in.	Mechanically Polished [Note (1)] R_a, Max. µm
SFF1	20	0.5
SFF2	25	0.625
SFF3	30	0.75
	Mechanically Polished and Electropolished	
	R_a, Max. µ-in.	R_a, Max. µm
SFF4	15	0.375
SFF5	20	0.5
SFF6	25	0.625

GENERAL NOTES:
(a) All R_a readings are taken across the lay, wherever possible.
(b) No single R_a reading shall exceed the R_a, max. value in this table.
(c) Other R_a readings are available if agreed upon between owner/user and manufacturer, not to exceed values in this table.

NOTE:
(1) Or any other finishing method that meets the R_a, max.

Copyright ASME International
Provided by IHS under license with ASME
No reproduction or networking permitted without license from IHS
Not for Resale

TABLE SF-5 ACCEPTANCE CRITERIA FOR INTERIOR SURFACE FINISHES OF VALVE BODIES (02) (a)

Anomaly or Indication	Acceptance Criteria
Cluster of pits	No more than 4 pits per each ½ in. × ½ in. inspection window. The cumulative total of all relevant pits shall not exceed 0.040 in.
Demarcation	If <5% of the total area when visually inspected and R_a, max. is met.
Dents	None accepted.
Grit lines	If R_a, max. is met.
Nicks	If depth <0.010 in.
Pits	If diameter <0.020 in. and bottom is shiny. Pits < 0.003 in. diameter are irrelevant and acceptable.
Porosity	If diameter <0.010 in. and bottom is shiny.
Scratches	If length <0.25 in., depth <0.003 in., and R_a max. is met.
Surface cracks	None accepted.
Surface inclusions	If R_a, max. is met and there is no liquid penetrant indication.
Surface residuals	None accepted, visual inspection.
Surface roughness (R_a)	See Table SF-6.
Weld slag	None accepted.

TABLE SF-6 R_a READINGS FOR VALVES (02) (a)

Surface Designation	Mechanically Polished [Note (1)] R_a, Max. µ-in.	Mechanically Polished [Note (1)] R_a, Max. µm
SFV1	20	0.5
SFV2	25	0.625
SFV3	30	0.75

	Mechanically Polished and Electropolished R_a, Max. µ-in.	µm
SFV4	15	0.375
SFV5	20	0.5
SFV6	25	0.625

GENERAL NOTES:
(a) All R_a readings are taken across the lay, wherever possible.
(b) No single R_a reading shall exceed the R_a, max. value in this table.
(c) Other R_a readings are available if agreed upon between owner/user and manufacturer, not to exceed values in this table.

NOTE:
(1) Or any other finishing method that meets the R_a, max.

Copyright ASME International
Provided by IHS under license with ASME
No reproduction or networking permitted without license from IHS
Not for Resale

(02)
(a)

TABLE SF-7 ACCEPTANCE CRITERIA FOR INTERIOR SURFACE FINISHES OF VESSELS

Anomaly or Indication	Acceptance Criteria
Cluster of pits	No more than 4 pits per each ½ in. × ½ in. inspection window. The cumulative total of all relevant pits shall not exceed 0.040 in.
Demarcation	If on the top head only and R_a, max. is met.
Dents	None accepted. [Note (1)]
Grit lines	If R_a, max. is met.
Longitudinal welds	If polished smooth, blended, and R_a, max. is met.
Nicks	None accepted.
Pits	If diameter <0.020 in. and if shiny, per inspection window [Note (2)]. Pits <0.003 in. diameter are irrelevant and acceptable.
Scratches	If length <0.50 in. at 0.003 depth and if <3 per inspection window [Note (2)].
Star burst	None accepted.
Surface cracks	None accepted.
Surface inclusions	If R_a, max. is met and there is no liquid penetrant indication.
Surface residuals	None accepted, visual inspection.
Surface roughness (R_a)	See Table SF-8.
Weld slag	None accepted.
Weld porosity	None accepted.

NOTES:
(1) Dents in the area covered by and resulting from welding dimple heat transfer jackets are acceptable.
(2) An inspection window is defined as an area 4 in. × 4 in.

Copyright ASME International
Provided by IHS under license with ASME
No reproduction or networking permitted without license from IHS
Not for Resale

(02)
(a)

TABLE SF-8 R_a READINGS FOR VESSELS

Surface Designation	Mechanically Polished [Note (1)] R_a, Max. µ-in.	R_a, Max. µm
SFVV1	20	0.5
SFVV2	25	0.625
SFVV3	30	0.75
	Mechanically Polished and Electropolished	
	R_a, Max. µ-in.	R_a, Max. µm
SFVV4	15	0.375
SFVV5	20	0.5
SFVV6	25	0.625

GENERAL NOTES:
(a) All R_a readings are taken across the lay, wherever possible.
(b) No single R_a reading shall exceed the R_a, max. value in this table.
(c) Other R_a readings are available if agreed upon between owner/user and manufacturer, not to exceed values in this table.

NOTE:
(1) Or any other finishing method that meets the R_a, max.

Copyright ASME International
Provided by IHS under license with ASME
No reproduction or networking permitted without license from IHS
Not for Resale

(a)

TABLE SF-9 ACCEPTANCE CRITERIA FOR INTERIOR SURFACE FINISHES OF OTHER PROCESS COMPONENTS

Anomaly or Indication	Acceptance Criteria
Cluster of pits	No more than 4 pits per ½ in. × ½ in. inspection window. The cumulative totals of all relevant pits shall not exceed 0.040 in.
Demarcation	If <5% of the total area when visually inspected and R_a, max. is met.
Dents	None accepted.
Grit lines	If R_a, max. is met.
Longitudinal welds	If polished smooth, blended, and R_a, max. is met.
Nicks	If depth <0.010 in.
Pits	If diameter <0.020 in. and bottom is shiny. Pits <0.003 in. diameter are irrelevent and acceptable.
Scratches	If length <0.25 in., depth <0.003 in., and R_a, max. is met.
Starburst	None accepted.
Surface cracks	None accepted.
Surface inclusions	If R max. is met and there is no liquid penetrant indication.
Surface residuals	None accepted, visual inspection.
Surface roughness (R_a)	See Table SF-10.
Weld slag	None accepted.
Weld porosity	None accepted.

(a)

TABLE SF-10 R_a READINGS FOR OTHER PROCESS COMPONENTS

Surface Designation	Mechanically Polished R_a Max. [Note (1)]	
	μ-in.	μm
SFC1	20	0.5
SFC2	25	0.625
SFC3	30	0.75
	Mechanically Polished and Electropolished R_a Max.	
	μ-in.	μm
SFC4	15	0.375
SFC5	20	0.5
SFC6	25	0.625

GENERAL NOTES:
(a) All R_a readings are taken across the lay wherever possible.
(b) No single R_a reading shall exceed the R_a max. value in this table.
(c) Other R_a readings are available if agreed upon between owner/user and manufacturer, not to exceed values in this table.

NOTE:
(1) Or any other finishing method that meets the R_a max.

--`,,`,`-`-`,,`,,`,`,,`---

Copyright ASME International
Provided by IHS under license with ASME
No reproduction or networking permitted without license from IHS
Not for Resale

PART SG
EQUIPMENT SEALS

SG-1 SCOPE AND PURPOSE

(a) SG-1.1 Scope

This Part defines the design and materials of construction of seals in equipment used in the bioprocessing, pharmaceutical, and personal care products industries. For this purpose, seals are defined as those elements that create or maintain process boundaries between system components and/or subassemblies in order to ensure system integrity in validated process and utility systems. It is not the intent of this Part to inhibit the development or use of new technologies.

SG-1.2 Purpose

The purpose of this Part is to enable equipment manufacturers, system designers, and end users to specify the required seal type and performance for a specific application.

SG-2 SEAL CLASSES

Seal classes define the level of seal integrity for a given service condition with regard to the average effect that leakage by the seal or catastrophic failure of the seal can have on the product within the system or on the environment exterior of a fluid system.

SG-2.1 Class I Seals

Seals defined under this class may experience some minute leakage due to sliding interaction with stems or shafts such as O-rings [SG-4.1.1.2(a)] or some packings [SG-3.5.6.3(a)]. Class I seals shall be allowed only in a continuously sterilizing environment. Examples are valves handling sterile steam. Mechanical seals may be of single seal arrangement (SG-3.5.3.1) such as packing [SG-3.5.6.3(a)], lip seals [SG-3.5.6.3(b)], and labyrinth seals [SG-3.5.6.3(c)].

SG-2.2 Class II Seals

Seals defined under this class shall include only nonsliding types of valve seals such as diaphragms [SG-4.1.1.2(b) and (c)]. Mechanical systems shall have multiple seals (SG-3.5.3.2). Examples of uses of Class II seals are for Water-for-Injection (WFI) and sucrose solutions.

SG-2.3 Class III Seals

Valve seals defined under this class shall have no sliding surfaces and shall exhibit a minimum degree of permeation. Examples of uses of Class III seals are for toxic fluids, highly dangerous fluids, and fluids containing pathogenic or recombinant DNA organisms. Shafts or stems shall have a secondary seal [SG-4.1.1.1(b)], while mechanical shaft seals shall have multiple seals [SG-3.5.3.2(a)] with a barrier fluid.

SG-2.4 Hygienic Fitting Seals (a)

Hygienic fitting seals are used to form a sealed union between two ferrules described in SD-3.7. A sealed flange assembly, illustrated in one of many configurations in Figs. SD-1 and SD-2, should result in a nearly flush interface between the gasket and the ferrule ID. The purpose of a flush interface is to minimize the entrapment of the material in a dead-zone that can lead to microbial growth and contamination. Furthermore, excessive intrusion into the process stream may lead to errosion of elastomeric seals, thereby contaminating the process stream. The amount of intrusion depends upon the dimensional control of the seal, the amount of torque applied to the flange, the material properties of the seal, the application of steam, and the surface of the seal (wet or dry) during installation.

When choosing a seal material, the end-user should consider the biocompatibility, cleanability, steam stability, low temperature flexibility, creep resistance, sealability, leak resistance, solvent resistance, lot traceability, and other factors, depending upon the application requirements. Service intervals should be determined by the end-user and will depend on the duty cycle.

SG-3 GENERAL PROVISIONS FOR SEALS IN BIOPROCESSING SERVICE: USER BASIC DESIGN REQUIREMENT

SG-3.1 Seal Performance

The equipment supplier shall be informed of all the conditions under which the seal may be expected to

Copyright ASME International
Provided by IHS under license with ASME
No reproduction or networking permitted without license from IHS
Not for Resale

operate. These shall include, in addition to the service temperature and pressure, any parameters that may affect the seal performance. It is up to the equipment supplier to inform the end user of the life cycle expectancy and the methods that will ensure that the seal operates within its design classification (e.g., routine maintenance).

SG-3.1.1 Service Temperature. Seals shall be capable of preventing unacceptable leakage when thermal cycled between the rated upper and lower temperature limits. The number of allowable thermal cycles shall be stated by the manufacturer.

SG-3.1.2 Service Pressure. The service pressure is the maximum permissible usage pressure for which the seal meets the maximum permissible leakage rate. The service pressure and acceptance level for pressure rating shall be furnished by the seal supplier.

SG-3.1.3 Bioburden. Bioburden is the concentration of microbial matter per unit volume. Microbial matter includes viruses, bacteria, yeast, mold, and parts thereof.

SG-3.1.4 Cavitation Resistance. The seal shall be placed so as to minimize damage by cavitation.

SG-3.1.5 Sterilization. The complete sterilization procedure shall be supplied by the end user. This shall include the methods, frequency, and length of operation.

SG-3.1.6 Cleaning. The complete cleaning procedure shall be supplied by the end user. This shall include the methods, frequency, and length of operation.

(02) **SG-3.1.7 Passivation.** The complete passivating procedure shall be supplied by the end user. The equipment supplier shall inform the end user whether the seal will be able to perform as specified after passivation, or whether a new seal is required before the start of operation.

SG-3.2 System Requirements

Cleaning and sterilization of a seal occurs on a regular basis. This is necessary to ensure elimination of any bacterial growth, which could harm future products or the environment. The methods of cleaning are:

SG-3.2.1 Cleaning Systems

(a) Clean-In-Place (CIP). The wetted part of a seal shall be designed so that accumulation of system media can be removed through the action of a cleaning solution. The seal should be placed to allow for best drainability.

(b) Clean-Out-of-Place (COP). Disassembly for cleaning.

SG-3.2.2 Sterilizing Systems. Seal requirements shall be based on the sterilization method utilized. All wetted seal surfaces shall be designed to minimize cracks and crevices. When cracks and crevices cannot be avoided, sterilization testing shall be performed to validate sterility within the system boundaries. All seals and seal contact surfaces shall be designed to accommodate expansion and contraction during sterilization and cooling-down stage. Seal materials shall be used that are corrosion-resistant to saturated steam and pure steam. The seal should be placed to allow for drainage of fluid. The following are typical sterilizing systems: (02)

(a) Steam-In-Place (SIP). All seals and their assemblies shall have a minimum temperature rating meeting the requirements of SD-3.2.2.

(b) Chemical Sterilization.

(c) Hot Air Sterilization at 160°C.

SG-3.2.3 Passivation Systems. The following are typical passivation systems:

(a) acid treatments; and

(b) proprietary trade formulations.

Full information shall be provided as to the corrosive or erosive effect on the seal.

SG-3.3 Seal Construction

SG-3.3.1 Materials

(a) Biocompatability. Biocompatability is defined here as the ability of a substance or material to be in contact with living matter such as bacteria or mammalian cells without interfering in any way with its metabolism or ability to live and procreate. Seal materials shall be biocompatible with the system fluid to ensure that the system fluid is not adversely affected by the seal material. The biocompatibility and proper material selection shall be the responsibility of the system user. (a)

Biocompatibility testing of candidate seals for qualification requires both in-vivo (animal testing) and in-vitro (testing in glass) tests. In-vivo testing is described in the United States Pharmacopea (USP) in Chapter 88 and involves intramuscular implantation, intrecutaneous injection, and systemic toxicity testing. In-vitro testing, on the other hand, is described in the United States Pharmacopea in Chapter 87 and is used to place extract from candidate seals in direct contact with living cells

Copyright ASME International
Provided by IHS under license with ASME
No reproduction or networking permitted without license from IHS
Not for Resale

(typically mouse cells) for a prescribed period of time. The amount of cell lysing (death) is recorded and reported for that particular seal material. Seal manufacturers must provide, upon customer request, documentation (test report) of the in-vivo USP Class VI <88> and the in-vitro Class VI <87> testing on final manufactured seals. Failure of either test indicates unacceptable biocompatibility of the candidate seal. Such failures are often attributed to adverse reaction to extractables from cured elastomeric seals. Extractables may include catalyst residues, cross linking agents, process aids, plasticizers, etc.

Qualification testing of final manufactured seals (actual seals, not generic compounds) can be performed on any given size seal (or combination thereof) within a product group as long as the materials used and the manufacturing process are representative of the entire group. Biocompatibility testing must be repeated for significant changes in raw materials or processes used to fabricate seals. Otherwise, biocompatibility testing is used upon initial qualification of the material and process by the seal manufacturer.

(02) (a) *(b) Process Compatability.* Seal materials shall be resistant to corrosion from process, cleaning, and sterilization fluids. Selection shall be based on all media that could come in contact with the seal, including cleaning and sterilization media. Special consideration shall be made when the exposure is at elevated temperatures.

(c) Permeation Resistance. Seal permeation shall be included in seal leakage criteria and not addressed as an individual topic.

(d) Surface Finish

(1) Seals shall be free of molding imperfections or burrs within the system boundary and on sealing surfaces.

(2) Seals shall be free of foreign matter on surfaces within the system boundary and on sealing surfaces.

(3) Surfaces to be sealed shall meet specifications provided by seal supplier based on performance and the requirements in Part SF.

(02) *(4)* Molded seals and components shall have mold flashing removed to prevent contact with the product stream.

(e) Particle Generation. Seal designs should minimize wear that generates particles that could enter the product.

(02) **SG-3.3.2 Crevices.** A smooth, contoured, pocketless interior surface shall be created when seals are placed between the seal contact surfaces. Gaskets and O-ring seals generally should be flush with the interior surface of the pipeline or the equipment; refer to Figs. SD-1(b), SD-1(c), SD-1(d), and SD-2(a). All recessed seal contact surfaces shall avoid sharp corners, and be easily cleanable with seal removed. All seal and seal contact surfaces shall be designed to minimize cracks or crevices that might harbor system media, refer to SD-3.6.

SG-3.3.3 Dead Spaces. Dead spaces are defined here as a void in the wetted portion of the structure not completely occupied by a seal, usually required to allow for thermal expansion of the seal material. These should be avoided; all seal and seal contact surfaces shall be designed so that the system is self-draining when seals are properly installed.

SG-3.4 Compliance Requirements

SG-3.4.1 General Requirements. A certificate of compliance shall be issued by the seal manufacturer to certify compliance to this Standard when required by the end user. Additional agreements may be required; refer to SD-3.4.3. At a minimum, seals exposed to process contact fluids and/or have a high probability of exposure will comply to the United States Pharmacopoea (USP) directive with regard to USP Class VI <88> and <87> on biological reactivity [see Section SG-3.3.1(a)]. Examples of seals coming in direct contact with a process stream include gaskets, o-rings, diaphragms, pinch tubes, and valve stem seals. (02) (a)

SG-3.4.2 Certificate of Compliance. The Certificate of Compliance shall contain the following information: (a)

(a) Manufacturer's name

(b) Part number

(c) Lot number

(d) Material of construction

(e) Cure Date or Date of Manufacture

(f) Compliance to USP Class VI testing <87> and <88>

(g) Packaging and storage recommendation (This may be of another document and not certificate of compliance)

Manufacturer's name and lot number must be provided by the seal manufacturer and be marked on either the seal itself or the bag containing the seal. The lot number should enable the manufacturer to identify the raw material and processing conditions used to fabricate the article. Manufacturers are encouraged to mark the seal itself to avoid potential loss to traceability and to

Copyright ASME International
Provided by IHS under license with ASME
No reproduction or networking permitted without license from IHS
Not for Resale

aid in positive identification of seals after removal from a process stream.

(02) (a) **SG-3.4.3 Test Requirements.** Test requirements shall comply with manufacturer's and/or user's quality assurance.

(02) SG-3.5 Sealing Systems

Sealing of rotating shafts, i.e., on pumps, agitators, and compressors, is accomplished with a system made up of a mechanical seal or seals and the necessary support equipment.

SG-3.5.1 Mechanical Seal. Basic components are the primary and mating rings held together to form the dynamic sealing surfaces perpendicular to the shaft as shown in Fig. SG-1. Seal faces shall be cooled and lubricated (e.g., by the sealed fluid and/or an exterior barrier fluid).

SG-3.5.2 Types of Seal Systems Based on Lubrication. Effective operation of a seal depends on the lubricating film between the faces. There are four types:

(a) Liquid Lubricated Contacting. Seal faces are cooled and lubricated by the fluid being sealed, i.e., process or barrier liquid. This system is normally applied to pumps.

(b) Liquid Lubricated Noncontacting. Seal faces are cooled and lubricated by a barrier liquid. In this system, the design of the seal faces is such that a generated lubricating film has a pressure greater than the liquid being sealed. This results in a noncontacting liquid seal design. This system is normally supplied to pumps.

(c) Gas Lubricated Contacting. Lightly loaded seal faces that are running dry are cooled and lubricated by the process or barrier gas being sealed as shown in Fig. SG-2. This is normally applied to top-entering agitators or fermentors.

(d) Gas Lubricated Noncontacting. Seal faces are cooled and lubricated by the process gas or a neutral barrier fluid like nitrogen or purified air to cool and lubricate the seal faces. The design of the seal faces is such that the generated gas film has a pressure greater than the pressure being sealed, creating a noncontacting design. This sealing concept is the most energy efficient and zero emissions control seal available to industry. This sealing concept is normally applied to pumps and compressors.

SG-3.5.3 Seal Arrangement. Seal arrangement is used to describe the design of a particular seal installation and the number of seals used on a piece of equipment. Single and multiple seal arrangements have been developed for emissions control and the development of various lubrication systems. Sealing arrangements are classified into two groups.

SG-3.5.3.1 Single Seal

(a) Internally Mounted, Process Lubricated. A single seal mounted inside the seal chamber is shown in Fig. SG-3. Process fluid pressure acts with the spring load to keep the seal faces in contact. The spring load shall be sufficient to provide adequate sealing pressure when fluid pressure is negative (vacuum).

(b) Externally Mounted, Process Lubricated. Outside mounted seals should be considered for low pressure applications. An external seal installation is lubricated by the process fluid being sealed as shown in Fig. SG-4. The purpose of using an outside mounted seal is to minimize the effects of corrosion that might occur if metal parts are directly exposed to the process fluid being sealed.

Externally mounted seals shall be lubricated such as by steam or gas depending on the process conditions. This type of design requires a seal face geometry to provide for the development of a gas or steam film at the seal faces. This type of installation is normally used on pumps having a repeller. Constant steam lubrication has the benefit of maintaining a sterile environment for low pressure applications. All external seal designs are intended for light duty service where the products are not considered hazardous to the plant environment.

SG-3.5.3.2 Dual Seals. Dual seal installations shall be used in applications requiring a neutral barrier fluid for lubrication, plant safety, and improved corrosion resistance.

Copyright ASME International
Provided by IHS under license with ASME
No reproduction or networking permitted without license from IHS
Not for Resale

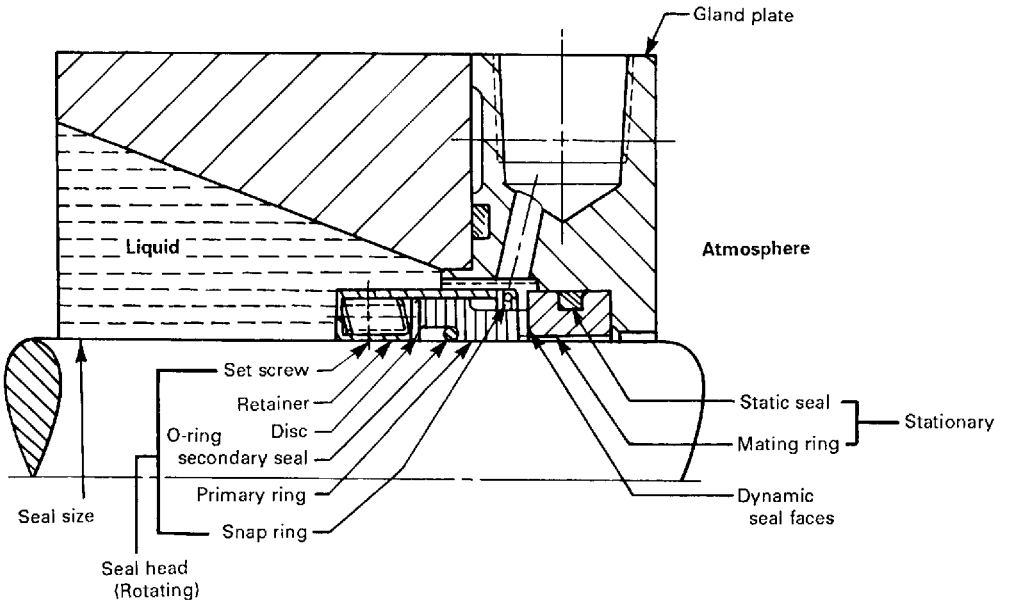

FIG. SG-1 BASIC COMPONENTS OF A SEAL

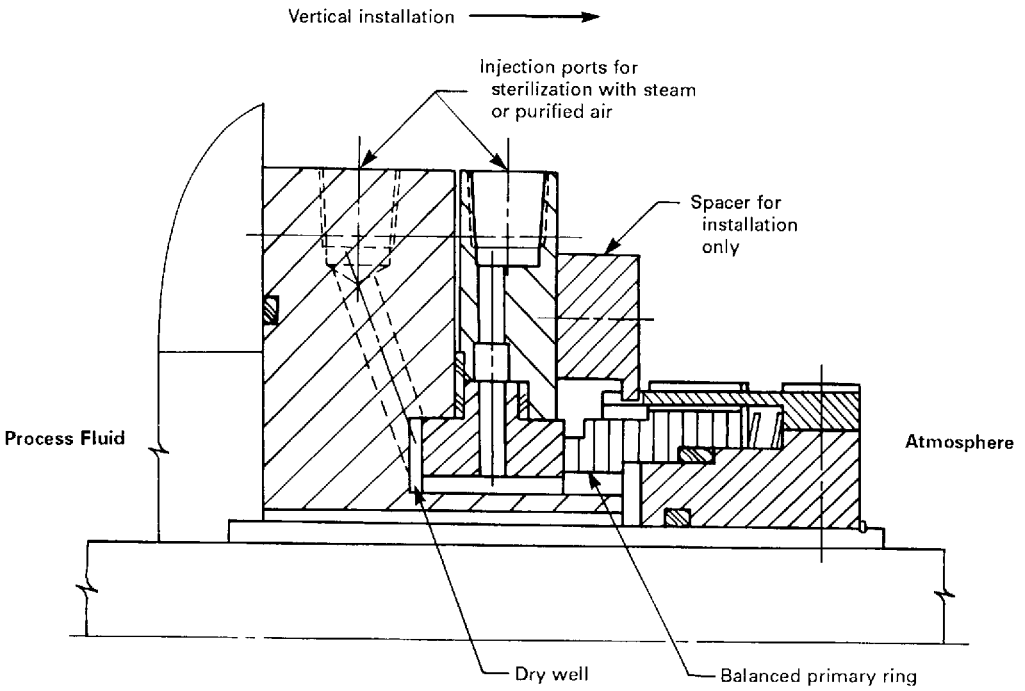

FIG. SG-2 SINGLE DRY RUNNING CONTACTING SEAL

Copyright ASME International
Provided by IHS under license with ASME
No reproduction or networking permitted without license from IHS
Not for Resale

Copyright ASME International
Provided by IHS under license with ASME
No reproduction or networking permitted without license from IHS
Not for Resale

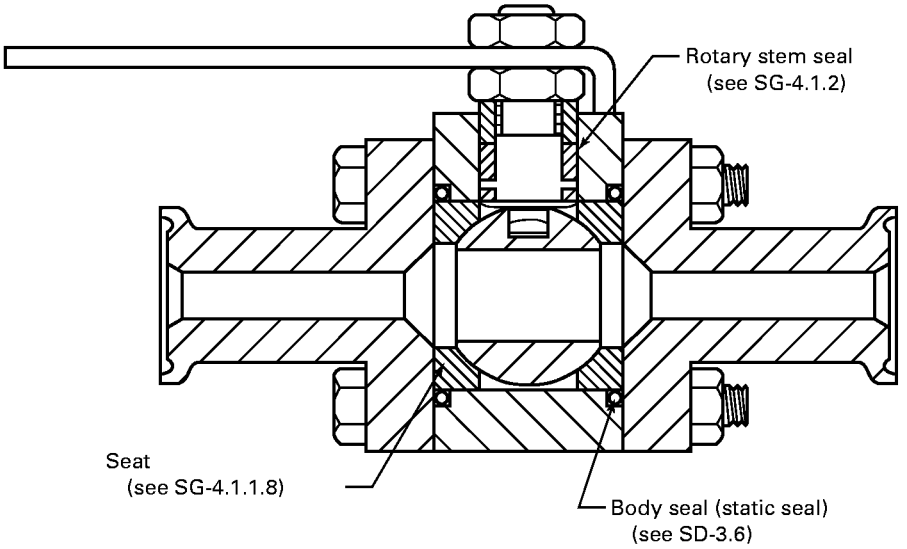

FIG. SG-17 TYPICAL BALL VALVE CONFIGURATION

shall be tested using dry, oil-free air or an inert gas at pressures corresponding to those listed in SG-4.1.1.6. The pressure shall be applied through the normal valve inlet port. Valves intended for modulating service, or valves having actuating devices of limited force output, shall be subjected to the actual working pressure for the specific valve.

(b) Allowable leakage rates shall be less than those specified under Class VI of ANSI/FCI Standard 70-2-1976 or MSS-SP-88, as applicable. The test duration shall be at least 1 min or sufficient time to establish a constant, measurable leakage rate.

(c) Valves utilized as block valves (outlet exposed to the environment) shall meet the applicable seat leakage requirements.

SG-4.1.1.7 Elastomeric or polymeric diaphragms used as valve closure members shall meet the requirements of SG-4.1.1.6 and the following:

(a) The integrity of the pressure boundary between that portion of the diaphragm serving as a static seal to the valve exterior and the valve housing shall be tested by applying dry, oil-free air or an inert gas to the body cavity at pressures corresponding to 1.2 times those listed in Section 10.3 of MSS-SP-88.

(b) Diaphragms may be marked in accordance with Section 12.3 of MSS-SP-88, but only on those portions of the diaphragm that are exposed beyond the sealing portion of the housing.

SG-4.1.1.8 Elastomeric or polymeric seals used as ball or butterfly valve closure members shall meet the requirements of SG-4.1.1.6. Ball valve closure members (seats) shall be considered static seals.

(a) Special consideration shall be given to cleaning the body cavity between adjacent seals (seats). Valve seals shall be arranged so that the internal body cavity will be self-draining when properly installed (see Fig. SG-17).

(b) Ball or butterfly valve closure members shall not be pressure dependent. Seal integrity shall be tested using dry, oil-free air or an inert gas at a pressure of 50–80 psi (345–550 kPa) and meet the leakage criteria of SG-4.1.1.6(b).

SG-4.1.2 Type 2 (Rotary Valve Stem Seals). This type shall meet all requirements of SG-4.1.1.2.

Copyright ASME International
Provided by IHS under license with ASME
No reproduction or networking permitted without license from IHS
Not for Resale

(a)

PART PM
POLYMER-BASED MATERIALS

PM-1 INTRODUCTION

This Part defines the requirements that are applicable to and unique to the use of polymer-based materials used in bioprocessing, pharmaceutical, and personal care products, equipment, components, assemblies and bioprocessing systems in conjunction with requirements of other applicable parts of this Standard along with applicable references. Polymer-based materials include thermoplastics and thermosetting materials, both virgin and composite forms. Wherever equipment is referred to in this Part, it shall mean all bioprocessing, pharmaceutical, and personal care products, equipment, components, assemblies, and systems.

PM-1.1 Scope and Purpose

The scope and purpose of this Part is to provide requirements for the specification and documentation of bioprocessing, pharmaceutical, and personal care product, equipment constructed with polymer-based materials that are required to be cleaned, sterilized, and to be operated in a clean and sterile manner.

NOTE: The design of the equipment and systems should reference Part SD of this standard. For requirements relating to polymer seals and gaskets refer to Part SG.

The objective of this Part is to describe and outline accepted practices for the use of polymer-based materials that have demonstrated their merit in attaining cleanability and sterility as they relate to bioprocessing equipment. Although acceptable requirements are indicated throughout this Part, more stringent requirements may be imposed as agreed to by the owner/user and manufacturer. Figures in this Part show ranges of usage and fabrication. There may be equipment being successfully used that corresponds to sketches labeled "not recommended." This Part covers new construction and shall not be used to evaluate the acceptability of existing equipment.

PM-2 DESIGN CONSIDERATIONS FOR POLYMERIC PIPING, TUBING, FITTINGS AND VALVE BODIES

PM-2.1 Sizing Comparisons

Thermoplastic piping systems are available in a variety of sizing standards. Tube, (e.g., Schedule 40, Schedule 80), Standard Dinensional Ratio (SDR) 11 and SDR 21 are some of the most common standards used. Table PM-1 is a reference that compares the outside and inside dimensions of these standards. It is important to consider these standards when performing system-sizing calculations to enhance dimensional alignment of pipe/tube inner diameters to allow for sterility, cleanability, and drainability. Tube inside dimensions are critical for alignment to stainless steel systems.

PM-2.2 Pressure Ratings

Polymer piping systems have varying pressure ratings depending on material and sizing standard. Valves and mechanical connections such as sanitary adapters, flanges, or threads may carry pressure ratings independent of pipe and fittings. Elevated operating temperatures will decrease overall system rating. Consult material manufacturers for specific details.

PM-2.3 Thermal Expansion

Polymer materials will expand and contract with changing temperature conditions. The effect of thermal expansion must be considered and designed for in each and every thermoplastic system.

To compensate for thermal expansion it is recommended to use loops, offsets, and changes in direction. By using the pipe itself to relieve the stress, the integrity of the pipe system is maintained. The use of bellows or pistons are not recommended due to the formation of pockets and gaps where liquids may be held up. The amount of thermal expansion growth in a pipe system is generally calculated by the following formula:

Copyright ASME International
Provided by IHS under license with ASME
No reproduction or networking permitted without license from IHS
Not for Resale

Table PM-1 Size Comparison of Common Thermoplastic Sizing Standards

Nominal Size	SS Tube		Thermoplastics							
			Sch 40		Sch 80		SDR 11		SDR 21	
	OD	ID	OD	ID	OD	ID	OD	ID	OD	ID
½	0.500	0.370	0.840	0.608	0.790	0.640	0.840	0.528	0.790	0.590
¾	0.750	0.620	1.050	0.810	0.980	0.830	1.050	0.742	0.980	0.770
1	1.000	0.870	1.315	1.033	1.260	1.071	1.315	0.935	1.260	1.020
1¼	. . .	. . .	1.660	1.364	1.570	1.381	1.660	1.256	1.570	1.280
1½	1.500	1.370	1.900	1.592	1.970	1.734	1.900	1.476	1.970	1.610
2	2.000	1.870	2.375	2.049	2.480	2.244	2.375	1.913	2.480	2.020
2½	2.500	2.370	2.875	2.445	2.950	2.667	2.875	2.289	2.950	2.410
3	3.000	2.870	3.500	3.042	3.540	3.068	3.500	2.864	3.540	2.900
4	4.000	3.840	4.500	2.998	4.330	3.802	4.500	3.786	4.330	3.540
6	6.000	5.782	6.625	6.031	6.300	5.694	6.625	5.709	6.300	5.140

(*U.S. Customary Units*)

$$\Delta L = 12 \times L \times \alpha \times \Delta T$$

where

ΔL = change in length (in.)
L = length of the pipe run (ft)
α = coefficient of thermal expansion (in./in./°F) material and temperature dependent
ΔT = temperature change (°F)

(*SI Units*)

$$\Delta L = L \times \alpha \times \Delta T$$

where

ΔL = change in length (mm)
L = length of the pipe run (mm)
α = coefficient of thermal expansion (mm/m/°C) material and temperature dependent
ΔT = temperature change (°C)

Typical coefficients of thermal expansion at room temperature by material type are found below. Consult manufacturer for exact coefficient values.

(*U.S. Customary Units*)

PVDF	6.6×10^{-5} (in./in./°F)
PFA	7.0×10^{-5} (in./in./°F)
PP	8.33×10^{-5} (in./in./°F)

SI Units

PVDF	1.2×10^{-5} (mm/m/°C)
PFA	1.2×10^{-5} (mm/m/°C)
PP	1.5×10^{-5} (mm/m/°C)

ΔT is the maximum (or minimum) temperature minus the install temperature. If the installation temperature or time of year is unknown, it is practical to increase the ΔT by 15% for safety. It is not necessary or practical to use the maximum temperature minus the minimum temperature unless it will truly be installed in one of those conditions.

PM-2.4 System Support Criteria

PM-2.4.1 Support Distances. Supports shall be placed based on the spacing requirements provided by system manufacturers. Hanging distances are based on system material as well as the specific gravity and temperature of the process media. Operating conditions of all applicable processes, including CIP and SIP must also be considered. Hanging criteria generally increases with system operating temperatures. The placement of hangers, guides, and anchors is critical in systems exposed to thermal cycling. Hanger locations should be identified by the system engineer and laid out to allow for expansion and contraction of the pipe over its life of operation.

Copyright ASME International
Provided by IHS under license with ASME
No reproduction or networking permitted without license from IHS
Not for Resale

PM-2.4.2 Hanger and Clamp Types. Avoid using hangers that place a pinpoint load on the pipe when tightened. A U-bolt hanger is not recommended for thermoplastic piping. Hangers that secure the pipe 360 deg around the pipe are preferred. Thermoplastic clamps are also recommended over metal clamps, as they are less likely to scratch the pipe in the event of movement. Clamps should be evaluated to avoid rough edges that could damage the pipe. Ideally, if a metal clamp is being used, an elastomer material should be used in between the pipe and the clamp. Refer to Part SD for exterior cleanability.

PM-2.5 Connections and Fittings

Design of equipment should minimize the number of connections. Fusion welded connections should be used wherever practical. Hygienic design of connections shall comply with SD-3.7, Connections and Fittings.

PM-2.6 Materials

Materials of construction shall not affect the purity or integrity of the product. It will be the owner/user's responsibility to select the appropriate materials of construction for the bioprocessing conditions. Materials shall be compatible with the stated bioprocessing conditions, cleaning solutions, and sterilizing conditions, etc., as specified by the owner/user.

Materials shall be capable of withstanding the temperature, pressure and chemical conditions.

Polymer surfaces may be used provided approval from the owner/user has been obtained. All polymer surfaces shall be designed to remain intact and be tolerant of applicable SIP and CIP. In general, bioprocessing surfaces requirements should consider the following characteristics:

(a) homogeneous in nature
(b) impervious
(c) inert
(d) nonabsorbent
(e) nontoxic
(f) insoluble by process or cleaning fluid
(g) Resistant to degradation, scratching, scoring, and distortion when exposed to bioprocessing fluids and sterilizing conditions.

All polymer materials in contact with bioprocessing fluids or that may have contact with the processing fluid shall be identified by referenced industry standards. Refer to PM 5.

The use of elastomers (within a piece of equipment) that may thermally degrade during sterilization will need to be thoroughly investigated by the owner/user and manufacturer. The overall life of the equipment may be shortened significantly if the correct polymer is not selected.

PM-3 POLYMER MATERIAL JOINING

PM-3.1 Scope

The requirements of this part are applicable to the fusion welding of polymeric materials used for bioprocessing equipment. Equipment includes but is not limited to valves, fittings, tubing, piping, pumps and lined tanks, reactors, and pressure vessels. These materials, joining methods, examinations, etc., are limited to process systems that contact bioprocessing products or product-process streams.

PM-3.2 Joining Processes and Procedures for Tube and Pipe Systems

Polymer tube and pipe systems are joined by a variety of heat fusion welding methods. Available techniques include: various beadless technologies, noncontact IR fusion, butt fusion, and socket fusion.

NOTE: All joining techniques may not be available for all materials, nor are all methods acceptable for all processes. Care should be taken in selecting material of construction and joining technique based upon application requirement. A brief description of some available joining techniques follows.

PM-3.2.1 Beadless Welding. Beadless welding (material-dependent) is compatible with SIP systems and must be used where system, in-place drainage is required. Beadless welding may be used in the process stream or where CIP requirements are defined. Beadless welding is the preferred method for system joining.

A variety of beadless welding techniques exists in which resultant joints are free from internal beads and crevices. The primary method of beadless welding involves careful diffusion of heat through the external surfaces while maintaining internal support of material as it becomes molten. Once heated to desired temperature and duration, the molten material flows and readily joins as a single piece. An internal support device is inserted in the weld area to prevent the formation on an internal bead. Refer to manufacturers' written procedures for the complete beadless welding process.

PM-3.2.2 Noncontact IR Butt Fusion. IR fusion is not suitable for SIP systems for it is not considered in-line drainable as required by accepted current Good Manufacturing Practices (cGMP).

Copyright ASME International
Provided by IHS under license with ASME
No reproduction or networking permitted without license from IHS
Not for Resale

IR welding is similar to butt fusion with the significant difference being the joining material does not come into direct contact with the heating element. Instead, the material is held in close proximity to the heating element and is heated by radial heat. IR welding uses the same critical welding parameters of heat soak time, change over time, and joining force as found with butt fusion. However, by avoiding direct contact with the heating element, IR fusion produces a cleaner weld with more repeatable and smaller bead sizes. Refer to manufacturers' written procedures for the complete noncontact, IR fusion welding process.

PM-3.2.3 Contact Butt Fusion. Butt fusion is not suitable for SIP systems for it is not considered in-line drainable as required by accepted cGMP.

The principle of butt fusion, as described in ASTM D 2657, "Joining Practices of Polyolefin Materials," is to heat two surfaces at the melt temperature, then make contact between the two surfaces and allow the two surfaces to fuse together by application of force. The force causes flow of the melted materials to join. Upon cooling, the two parts are united. Nothing is added or changed chemically between the two components being joined. Butt fusion does not require solvents or glue to join material. Butt fusion joints result in external and internal beads, which may assist with weld quality and inspection criteria.

Refer to manufacturers' written procedures and ASTM D 2657, "Joining Practices of Polyolefin Materials," DVS 2207-11, "Welding of Thermoplastics Heated Tool Welding of Pipes, Pipeline Components" and sheets out of PP and DVS 2207-15, "Welding of Thermoplastics Heated Tool Welding of Pipes, Pipeline Components" and sheets out of PVDF.

PM-3.2.4 Socket Fusion. Socket fusion is not suitable for SIP systems for it is not considered in-line drainable as required by accepted cGMP.

In socket welding, as described in ASTM D 2657, the pipe end and socket fittings are heated to the welding temperature by means of a socket and spigot heater inserts. Socket welding may be manually performed on pipe diameters up to 2.0 in. (63 mm). Sizes above that require a Bench Socket Tool due to the required joining forces. In sizes greater than 1 in., a bench style machine may be preferred for ease of operation.

Refer to manufacturers' written procedures and ASTM D 2657, DVS 2207-11, "Welding of Thermoplastics Heated Tool Welding of Pipes, Pipeline Components" and sheets out of PP, and DVS 2207-15.

PM-3.3 Joint Design and Preparation

The quality of polymeric weld joints depends on the qualification of the welders, the suitability of the equipment used, environmental influences, and adherence to applicable weld standards.

Every welder must be trained and possess a valid qualification certificate. Weld component and equipment manufacturer, or its representative, shall provide certification training and a valid qualification certificate.

The welding zone must be protected against adverse environmental influences including excessive moisture, extreme temperature conditions, excessive drafts, and contamination sources (i.e., dirt, dust, oil, foreign material shavings). Environmental condition recommendations shall be included in the Bonding Procedure Specification (BPS) provided by the material/equipment manufacturer and approved by the owner/user.

PM-3.3.1 Tubing and Pipe. Joint designs for tubing, pipe, and fittings shall be square butt joints. Joining surfaces shall have ends prepared by molding, cutting, machining, or facing to provide a square end that meets requirements of Table DT-5 for applicable squareness.The butt weld joints must be completed in accordance with the BPS. The owner/user and contractor shall agree that the welding process selected will provide the desired results.

PM-3.4 Weld Acceptance Criteria

Inspection criteria and methods are dictated by material type and joining method. Common visual inspection criteria includes: complete bonding of joining surface, straight and aligned joints, exclusion of dirt and foreign substances in weld zone.

PM-3.4.1 Weld Acceptance for Beadless Welds. Visual weld acceptance (including borescopic and light illumination at 1X magnification) for beadless polymer hygienic pipe, tubing, valves, and fittings that are internally and externally inspected shall be in accordance with the weld acceptance criteria of this section. This Part does not require radiography for polymer materials. Preproduction sample welds, when required, shall be submitted by the contractor to the owner/user to establish weld quality. Owner/user, contractor, and inspection contractor shall agree to the number and type of sample welds. During construction, sample welds shall be made on a regular basis to verify that the equipment is operating properly and that the setup is adequate to prevent discoloration beyond the level agreed upon by the owner/user and contractor. Owner/

Copyright ASME International
Provided by IHS under license with ASME
No reproduction or networking permitted without license from IHS
Not for Resale

user and contractor shall agree to the frequency of sample welds. It is strongly recommended that these sample welds be made at the beginning of each work shift and when changing the operator or welding equipment.

PM-3.4.1.1 Cracks and Crevices. Any crack or crevice would generally indicate lack of full penetration welds. No internal or external cracks or crevices shall be permitted in the weld zone. See Fig. PM-1(b).

PM-3.4.1.2 Pits or Pores. Pits and pores shall not be present in the weld zone on the interior surface. See Fig. PM-1(c).

PM-3.4.1.3 Voids. Voids or microbubbles in the weld zone are the result of molten material shrinking as it cools leaving small voids, usually in the center of the weld, due to volume displacement. They are not uncommon in beadless welding and their presence alone is not reason for rejection. Large voids [limited by PM-3.4.1.3(a)] or excessive voids [limited by PM-2.4.1.3(b)] are not acceptable according to the following guidelines:

(a) Any single void larger in diameter than 10% of nominal pipe wall thickness is not acceptable.

(b) The total for all void diameters in a given cross sectional inspection shall not exceed 10% of nominal pipe wall thickness.

See Fig. PM-1(d).

PM 3.4.1.4 Fit-up and Mismatch. Components shall be aligned so as to prevent hold-up volume areas that would contribute to contamination of the product. The maximum misalignment is 10% of nominal wall thickness [see Fig. PM-1(e)]. It is not recommended to join two polymer components of different wall thicknesses.

PM-3.4.1.5 Inclusions. Any dark, visible inclusion or specks on the wetted surface of the weld zone are considered foreign materials and are not acceptable. See Fig. PM-1(f).

PM-3.4.1.6 Discoloration. Slight discoloration in the weld zone is not uncommon in beadless welding. Slight discoloration would include up to a light "straw" color in the weld zone. Dark color change on the surface or at weld interface could indicate improper cleaning or joint preparation and should be rejected. See Fig. PM-1(g).

PM-3.4.1.7 Concavity. Maximum inside diameter (ID) concavity shall be limited to 10% of the nominal pipe wall thickness. See Fig. PM-1(h).

PM-3.4.2 Examination Procedures for Nonbeadless Welds. Weld acceptance criteria for piping shall be in accordance with ASME B31.3, A341.3.2 through A341.3.4; DVS 2202-1, "Imperfections in Thermoplastic Welding Joints; Features, Descriptions, Evaluations"; and American Welding Society (AWS) G1.10M, "Guide for the Evaluation of Hot Gas, Hot Gas Extrusion, and Heated Tool Butt Thermoplastic Welds" criteria. These standards contain detailed, nondestructive inspection requirements for fabrication of sheets and piping systems by heat welding, socket and butt fusion. Refer to manufacturers' inspection criteria for Noncontact IR and beadless welding techniques.

Borescoping of polymer systems is not an absolute requirement although it may be preferred by owner and inspector.

PM 3.4.3 Testing. Hydrostatic testing of piping and rigid tubing systems shall be performed in accordance with ASME B31.3, Chapter VI, Section 345. Pneumatic testing shall not be used for polymer systems.

PM-3.4.4 Records. Weld equipment should monitor and record critical weld parameters such as heat, cool time, and temperature. If the equipment does not have monitoring or recording capabilities, weld data shall be recorded in welding protocols or on data carriers.

Additional requirements of records and retention of records associated with piping and tubing shall be in accordance with ASME B31.3, Chapter VI, Section 346.

PM-3.5 Documentation Requirements

The following documentation shall be presented to the owner/user or his/her designee, as a minimum:

(a) Welding Documentation. Welding Procedure Specifications/Parameters (WPS/P) used, their Procedure Qualification Records (PQR), and Welder Performance Qualifications/Certification (WPQ/C) or Welding Operator Performance Qualifications/Certifications (WOPQ/C).

(b) Weld Maps. When required by the owner/user, weld maps of bioprocessing components; weld inspection logs of bioprocessing components (including type and date of inspection); and welder identification of each weld shall be provided either on the weld map or on the inspection log.

It is recommended to utilize fusion equipment which electronically stores welding histories and serializes welds. Welding history shall be turned over, in printed or electronic format, to owner/user upon completion

Copyright ASME International
Provided by IHS under license with ASME
No reproduction or networking permitted without license from IHS
Not for Resale

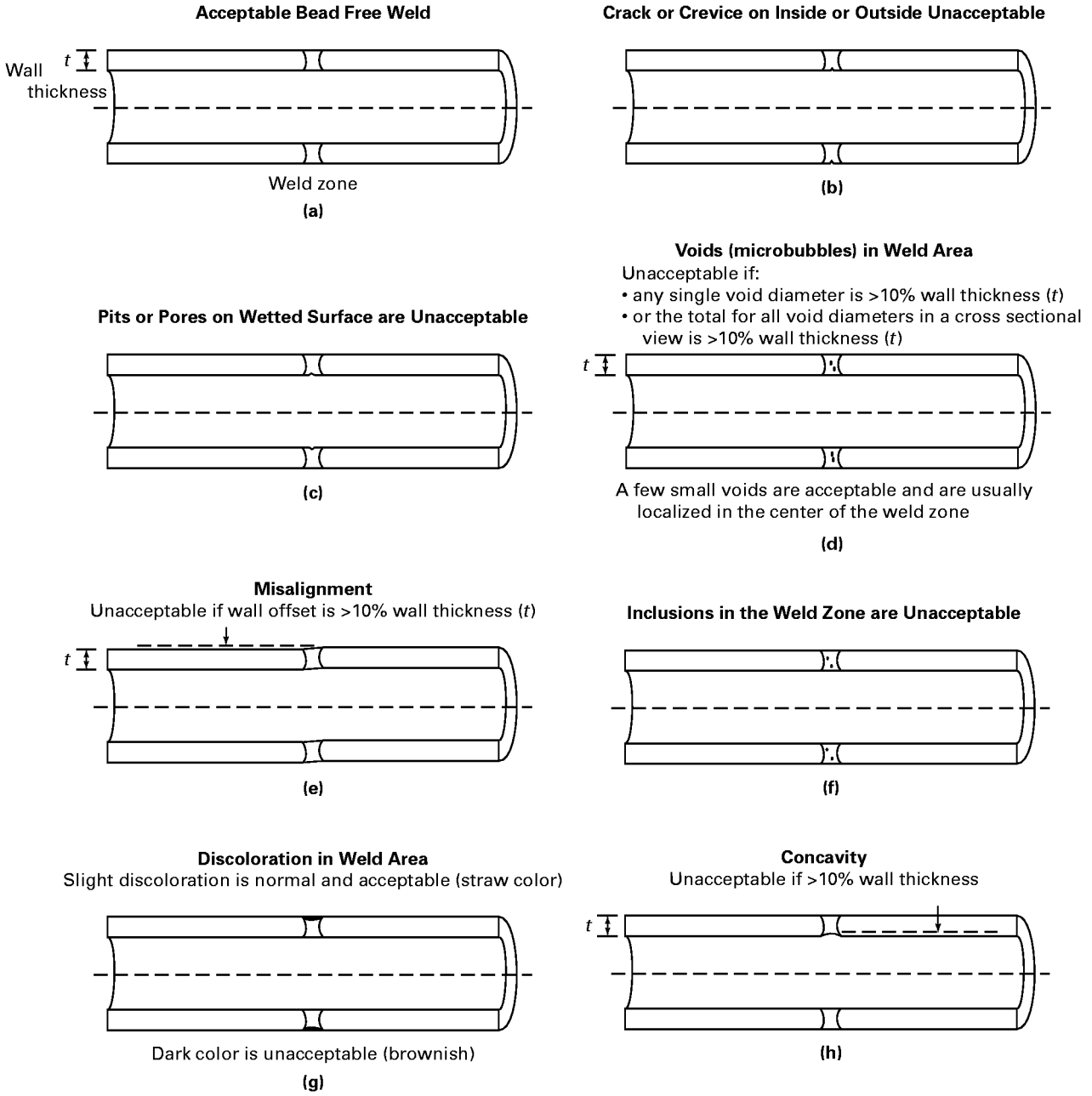

FIG. PM-1 ACCEPTABLE AND UNACCEPTABLE WELD PROFILES FOR BEADLESS WELDS

Copyright ASME International
Provided by IHS under license with ASME
No reproduction or networking permitted without license from IHS
Not for Resale

of work and as part of the Installation Qualification (IQ) process.

(c) Materials. All molded fittings, molded valves, and extruded pipe shall be intrinsically identified to provide, as a minimum, material of construction, lot number and date of production to ensure traceability. Certificate of compliance shall be provided for molded/extruded components not properly labeled.

(d) Testing Records. Other records (e.g., pressure test, surface finish) shall be provided as required by owner/user.

PM-4 POLYMER INTERIOR WETTED SURFACES OF PIPING, TUBING, FITTINGS, VALVE BODIES, AND COATED OR LINED VESSELS

Surface finishes, as measured by profilometer or other acceptable method, shall be defined by application and the owner/user.

PM-5 MATERIALS OF CONSTRUCTION

PM-5.1 Scope

The scope and purpose of this section is to provide information related to polymer materials used in bioprocessing. Included is information about various types of materials such as tubing, piping, sheets, weld rods, and other shapes used in such equipment as storage tanks, reactors, agitators, piping, valves, pumps, and hoses.

PM-5.2 Thermoplastic Materials

Polymeric materials for process surfaces shall conform to a published ASTM Standard or other recognized specification, unless otherwise agreed to by purchaser and supplier. Material shall also meet the standard requirements of the Food and Drug Administration (FDA) and United States Pharmacopoeia (USP) Class VI.

For fusion-welded components, it is the responsibility of the manufacturer to supply polymeric components manufactured using resins having Melt Flow Rates (MFR) as measured by ASTM D 1238, "Standard Test Method for Flow Rates of Thermoplastics by Extrusion Plastometer," suitable for the intended method of joining.

Selection of material of construction shall be decided by owner and shall be dependent upon factors such as intended application, specified process quality, and cleaning requirements. Not all materials and joining methods are preferred for all applications. Polymer stock material used for wetted, custom fabrication components shall be virgin, unpigmented and should be compatible with the material used in the rest of the process piping/tubing application. Weld rod used in the application shall be virgin and unpigmented.

PM-5.2.1 Fluorinated Ethylene-Propylene (FEP). All FEP resin shall be virgin, of the same type and class as described in ASTM D2116, and listed in the United States Code of Federal Register (CFR) Title 21, Chapter 1, Part 177.1550 for food contact.

PM-5.2.2 Perfluoroalkoxy (PFA). All PFA resin shall be virgin, of the same type and class as described in ASTM D3307, and listed in the United States Code of Federal Register (CFR) Title 21, Chapter 1, Part 177.1550 for food contact.

PM-5.2.3 Polypropylene (PP). All PP resin shall be virgin, of the same type and class as described in ASTM D 4101, and listed in the United States Code of Federal Register (CFR) Title 21, Chapter 1, Part 177.1520 for food contact.

PM-5.2.4 Polytetrafluoroethylene (PTFE) and Modified Polytetrafluoroethylene (M PTFE). All PTFE, and modified PTFE, resin shall be virgin, of the same types and classes as described in ASTM D 4894 and D 4895, and listed in the United States Code of Federal Register (CFR) Title 21, Chapter 1, Part 177.1550 for food contact.

PM-5.2.5 Polyvinylidene Fluoride (PVDF) and Polyvinylidene Fluoride/Hexafluoropropylene (PVDF/HFP). All PVDF resin shall be virgin and described in ASTM D3222 or ASTM D5575 and listed in the United States Code of Federal Register (CFR) Title 21, Chapter 1, Part 177.2510 or 177.2600 for food contact.

PM-5.2.6 Filler Materials. Filler materials may be utilized with the preceding materials to enhance properties for uses such as, but not limited to, gaskets and seals. Final fabricated products made with filler materials shall be USP Class VI compliant.

PM-5.3 Thermoset Elastomers

Original physical properties and other properties required for satisfactory performance of the elastomer shall be agreed upon by the user and supplier. Appropriate documentation, regarding such properties, such

Copyright ASME International
Provided by IHS under license with ASME
No reproduction or networking permitted without license from IHS
Not for Resale

as a certificate of compliance, shall be furnished to the user. Performance properties may include, for example: hardness specification, compression set limits, minimum tensile strength at break, resistance to media (time, temperature, concentration), etc. The elastomer material used shall conform to relevant Food and Drug Administration (FDA) and USP Class VI requirements.

PM-5.3.1 Ethylene Propylene (EPM and EPDM). Ethylene propylene or ethylene propylene diene monomer elastomer shall be made from 100% virgin polymer as the sole elastomer component.

PM-5.3.2 Silicone (VMQ). Silicone elastomer shall be made from 100% virgin polymer as the sole elastomer component.

PM-5.3.3 Fluoroelastomer (FKM). Fluoroelastomer shall be made from 100% virgin polymer as the sole elastomer component.

PM-5.3.4 Perfluoroelastomer (FFKM). Perfluoroelastomer shall be made from 100% virgin polymer as the sole elastomer component.

PM-5.4 New Materials

New materials or significant reformulations of existing materials shall at a minimum conform to USP Class VI requirements (also consider USP 661 and USP 381) and PM-2 of this document.

Copyright ASME International
Provided by IHS under license with ASME
No reproduction or networking permitted without license from IHS
Not for Resale

Copyright ASME International
Provided by IHS under license with ASME
No reproduction or networking permitted without license from IHS
Not for Resale

Copyright ASME International
Provided by IHS under license with ASME
No reproduction or networking permitted without license from IHS
Not for Resale



Copyright ASME International
Provided by IHS under license with ASME
No reproduction or networking permitted without license from IHS

Not for Resale

ASME BPE-2002

(Revision of ASME BPE-1997)

Bioprocessing Equipment

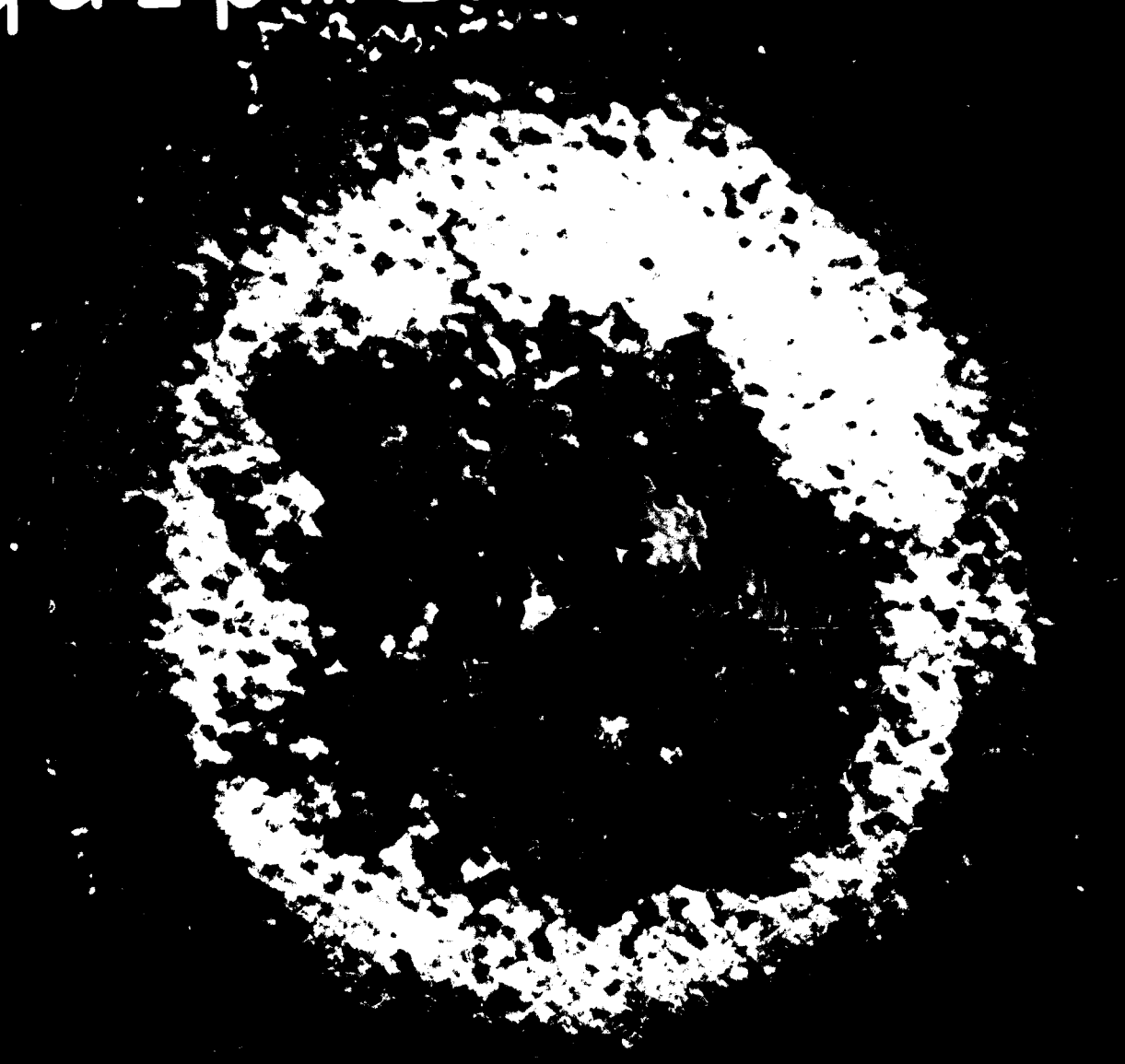

AN INTERNATIONAL STANDARD

The American Society of Mechanical Engineers

Copyright ASME International
Provided by IHS under license with ASME
No reproduction or networking permitted without license from IHS

Not for Resale

The American Society of Mechanical Engineers

AN AMERICAN NATIONAL STANDARD

BIOPROCESSING EQUIPMENT

ASME BPE-2002
(Revision of ASME BPE-1997)

Copyright ASME International
Provided by IHS under license with ASME
No reproduction or networking permitted without license from IHS
Not for Resale

Date of Issuance: July 26, 2002

The 2002 edition of this Standard is being issued with an automatic addenda subscription service. The use of addenda allows revisions made in response to public review comments or committee action to be published as necessary; revisions published in addenda will become effective 6 months after the Date of Issuance of the addenda. The next edition of this Standard is scheduled for publication in 2005.

ASME issues written replies to inquiries concerning interpretations of technical aspects of this Standard. The interpretations will be included with the addenda service.

Proposed new and revised Cases, as well as notices of their approval, issued by the BPE Main Committee appear in *Mechanical Engineering*. Once approved, the Cases are published with the next regularly scheduled addenda or edition as a service to subscribers.

ASME is the registered trademark of The American Society of Mechanical Engineers.

This code or standard was developed under procedures accredited as meeting the criteria for American National Standards. The Standards Committee that approved the code or standard was balanced to assure that individuals from competent and concerned interests have had an opportunity to participate. The proposed code or standard was made available for public review and comment that provides an opportunity for additional public input from industry, academia, regulatory agencies, and the public-at-large.

ASME does not "approve," "rate," or "endorse" any item, construction, proprietary device, or activity.

ASME does not take any position with respect to the validity of any patent rights asserted in connection with any items mentioned in this document, and does not undertake to insure anyone utilizing a standard against liability for infringement of any applicable letters patent, nor assumes any such liability. Users of a code or standard are expressly advised that determination of the validity of any such patent rights, and the risk of infringement of such rights, is entirely their own responsibility.

Participation by federal agency representative(s) or person(s) affiliated with industry is not to be interpreted as government or industry endorsement of this code or standard.

ASME accepts responsibility for only those interpretations of this document issued in accordance with the established ASME procedures and policies, which precludes the issuance of interpretations by individuals.

This document is an American National Standard.

No part of this document may be reproduced in any form,
in an electronic retrieval system or otherwise,
without the prior written permission of the publisher.

The American Society of Mechanical Engineers
Three Park Avenue, New York, NY 10016

Copyright © 2002 by
THE AMERICAN SOCIETY OF MECHANICAL ENGINEERS
All Rights Reserved
Printed in U.S.A.

Copyright ASME International
Provided by IHS under license with ASME
No reproduction or networking permitted without license from IHS

Not for Resale

CONTENTS

Foreword viii
Statements of Policy x
Standards Committee Roster xii
Summary of Changes xv

Part GR General Requirements
GR-1 Introduction 1
GR-2 Scope 1
GR-3 Inspection 1
GR-4 Inspector/Examiner 1
GR-5 Responsibilities 2
GR-5.1 Pressure Vessels 2
GR-5.2 Piping, Tubing, and Noncode Vessels 2
GR-6 Access for Inspectors 2
GR-7 Manufacturer's Quality Assurance Program 2
GR-8 Metric 2
GR-9 References 2
GR-10 Terms and Definitions 3

Part SD Design for Sterility and Cleanability
SD-1 Introduction 9
SD-2 Scope and Purpose 9
SD-3 General Guidelines 9
SD-3.1 Cleanability 9
SD-3.2 Sterility 10
SD-3.3 Surface Finishes 10
SD-3.4 Materials of Construction 10
SD-3.5 Fabrication 11
SD-3.6 Static O-Rings, Seals, and Gaskets 11
SD-3.7 Connections and Fittings 11
SD-3.8 Exterior Design 13
SD-3.9 Containment 14
SD-3.10 Miscellaneous Design Details 14
SD-3.11 System Design 14
SD-3.12 Drainability 16
SD-4 Specific Guidelines 18
SD-4.1 Instrumentation 18
SD-4.2 Specialty Hoses 20
SD-4.3 Centrifuges 20
SD-4.4 Filtration Equipment 23
SD-4.5 Pumps 23
SD-4.6 Process (Hygienic) Valves 25
SD-4.7 Vessels, Tanks, Bioreactors, Fermenters, and Columns 25

Copyright ASME International
Provided by IHS under license with ASME
No reproduction or networking permitted without license from IHS
Not for Resale

SD-4.8	Agitators and Mixers	29
SD-4.9	Heat Exchange Equipment	35
SD-4.10	Cell Disrupters	37
SD-4.11	High Purity Water and Steam Systems	37
SD-4.12	WFI Generators and Clean/Pure Steam Generators	38
SD-4.13	Micro/Ultrafiltration and Chromatography Systems	38
SD-4.14	Sterilizers/Autoclaves	38
SD-4.15	CIP Systems and Design	38
SD-5	Testing and Inspection	40
SD-5.1	Spray Ball Test	41
SD-5.2	Sterility/Cleaning Testing	41
SD-5.3	Hydrostatic Test	41
SD-5.4	Drainability Test	41
SD-6	Documentation	41
SD-7	Responsibilities	42
Part DT	**Dimensions and Tolerances for Stainless Steel Automatic Welding and Hygienic Clamp Tube Fittings and Process Components**	
DT-1	Scope	43
DT-2	Pressure Rating	43
DT-3	Marking	43
DT-3.1	Marking Information	43
DT-3.2	Method of Marking	43
DT-3.3	Exceptions	43
DT-4	Materials	43
DT-5	Metal Thickness	43
DT-6	Fitting Dimensions	44
DT-7	Tests	45
DT-8	Tolerances	45
DT-9	Welding Ends	46
DT-10	Hygienic Clamp Ends	46
DT-11	Heat Treatment	46
DT-12	Surface Condition	46
DT-13	Packaging	46
Part MJ	**Material Joining**	
MJ-1	Scope	58
MJ-2	Materials	58
MJ-2.1	Stainless Steels	58
MJ-2.2	Nickel Alloys	58
MJ-2.3	Mechanically Polished Material	58
MJ-2.4	Electropolished Material	58
MJ-2.5	Other Materials	58
MJ-2.6	Weld and Finish Samples	58
MJ-3	Joining Processes and Procedures	58
MJ-3.1	Welds Finished After Welding	58
MJ-3.2	Welds Used in the As-Welded Condition	58
MJ-3.3	Nonmetallics	59
MJ-3.4	Mechanical Connections	59
MJ-4	Weld Joint Design and Preparation	59
MJ-4.1	General	59
MJ-4.2	Pressure Vessels and Tanks	59
MJ-4.3	Piping	59

Copyright ASME International
Provided by IHS under license with ASME
No reproduction or networking permitted without license from IHS
Not for Resale

MJ-4.4	Tubing	59
MJ-5	Filler Material	59
MJ-6	Weld Acceptance Criteria	59
MJ-6.1	General	59
MJ-6.2	Pressure Vessels and Tanks	59
MJ-6.3	Piping	59
MJ-6.4	Tubing	59
MJ-6.5	Sample Welds	62
MJ-7	Inspection, Examination, and Testing	62
MJ-7.1	Scope	62
MJ-7.2	Types of Examinations	62
MJ-7.3	Examination Procedures	62
MJ-7.4	Supplementary Examinations	63
MJ-7.5	Testing	63
MJ-7.6	Records	63
MJ-8	Procedure Qualification	63
MJ-8.1	Pressure Vessels and Tanks	63
MJ-8.2	Piping	63
MJ-8.3	Tubing	63
MJ-9	Performance Qualification	63
MJ-9.1	Pressure Vessels and Tanks	63
MJ-9.2	Piping	63
MJ-9.3	Tubing	63
MJ-10	Documentation Requirements	63
MJ-11	Passivation	64
Part SF	**Stainless Steel and Higher Alloy Interior Surface Finishes**	
SF-1	Scope	65
SF-2	Objective	65
SF-3	Applications	65
SF-4	Material	65
SF-5	Typical Stainless Steel Interior Surface Anomaly Characteristics	65
SF-6	Classification of Interior Surface Finishes on Weldments for Process Equipment and Components	65
SF-7	Inspection and Techniques Employed in the Classification of Interior Surface Finishes	66
SF-8	Description of Various Surfaces Available on Stainless Steel and Higher Alloys	66
Part SG	**Equipment Seals**	
SG-1	Scope and Purpose	71
SG-1.1	Scope	71
SG-1.2	Purpose	71
SG-2	Seal Classes	71
SG-2.1	Class I Seals	71
SG-2.2	Class II Seals	71
SG-2.3	Class III Seals	71
SG-3	General Provisions for Seals in Bioprocessing Service: User Basic Design Requirement	71
SG-3.1	Seal Performance	71
SG-3.2	System Requirements	72
SG-3.3	Seal Construction	72
SG-3.4	Compliance Requirements	73

Copyright ASME International
Provided by IHS under license with ASME
No reproduction or networking permitted without license from IHS
Not for Resale

SG-3.5 Sealing Systems 73
SG-4 Special Provisions for Seals in Bioprocessing Service 78
SG-4.1 Group 2 (Dynamic Seals) 78

Figures

SD-1 Hygienic Design Connections 12
SD-2 Typical Design of Fittings 13
SD-3 Flat Gasket Applications 21
SD-4 Recommended and Preferred Drop Designs 22
SD-5 Double Block-and-Bleed Valve Assembly 23
SD-6 Instrument Location Detail: Hygienic Design 24
SD-7 Flexible Hygienic Hose Design 24
SD-8 Tank/Vessel Vent Filters 26
SD-9 Nozzle Design 27
SD-10 Sidewall Instrument Ports 28
SD-11 Dip Pipe Tri-Clamp 28
SD-12 Vessel Design Tangential Nozzles 29
SD-13 Vessel Sight Glass Location 30
SD-14 Side and Bottom Connections 31
SD-15 Dip Pipe Nozzles: Removable Designs 31
SD-16 Sight Glass Design 32
SD-17 Internal Support Members 33
SD-18 Mitered Fittings 34
SD-19 Typical Nozzle Detail 34
SD-20 Step Shafts for Agitators and Mixers 35
SD-21 In-Tank Couplings 36
SD-22 Agitator Blade Design 37
MJ-1 Acceptable and Unacceptable Weld Profiles for Tube Welds 61
SG-1 Basic Components of a Seal 74
SG-2 Single Dry Running Contacting Seal 74
SG-3 Internally Mounted, Process Lubricated Contact Seal 75
SG-4 Externally Mounted, Process Lubricated Contact Seal 76
SG-5 Double Seal Installation 76
SG-6 Tandem Seal Installation 77
SG-7 Seal Piping and Lubrication Plans 78
SG-8 Gas Lubricated Noncontacting Double Seal 79
SG-9 Tandem Seal With Barrier System 79
SG-10 Typical Packing Installation 80
SG-11 V-Ring Packing for Reciprocating Applications 80
SG-12 Open Cross-Sectional Lip Seal 80
SG-13 Labyrinth Seal 80
SG-14 Typical Angle Valve With Rolling Diaphragm and Orifice 81
SG-15 Example of Sampling Valve With Uniformly Loaded Sliding Seal 82
SG-16 Typical In-Line Diaphragm Valve With Weir 82
SG-17 Typical Ball Valve Configuration 83

Tables

SD-1 *L/D* Dimensions for Flow-Through Tee: Full-Size Standard Straight Tee With Blind Cap 15
SD-2 *L/D* Dimensions for Flow-Through Tee: Full-Size Standard Straight Tee With Diaphragm Valve 16
SD-3 Type A *C/D* Ratio (Tube Center to Weir Center) and *W/D* Ratio (Tube Wall ID to Weir Center) 17

Copyright ASME International
Provided by IHS under license with ASME
No reproduction or networking permitted without license from IHS
Not for Resale

SD-4 Type B *C/D* Ratio (Tube Center to Weir Center) and *W/D* Ratio (Tube Wall ID to Weir Center) 18
SD-5 *L/D* Dimensions for Flow-Through Tee: Short Outlet Reducing Tee With Blind Cap 19
SD-6 Recommended Flow Rates to Achieve 5 fps (1.52 mps) 40
SD-7 Recommended Flow Rates for Cleaning Vertical Cylindrical Vessels Having Dished Heads 40
DT-1 Nominal OD Tubing Sizes 44
DT-2 Hygienic Unions 44
DT-3 Chemical Composition for Automatic Weld Ends, % 44
DT-4 Tangent Lengths 44
DT-5 Final Tolerances for Mechanically Polished Fittings and Process Components 45
DT-6 Final Tolerances for Electropolished Fittings and Process Components 46
DT-7 Automatic Tube Weld: 90 deg Elbow 46
DT-8 Automatic Tube Weld: 45 deg Elbow 47
DT-9 Automatic Tube Weld: Straight Tee and Cross 47
DT-10 Automatic Tube Weld: Reducing Tee 48
DT-11 Automatic Tube Weld: Concentric and Eccentric Reducer 48
DT-12 Automatic Tube Weld: Hygienic Clamp Joint, 90 deg Elbow 49
DT-13 Automatic Tube Weld: Hygienic Clamp Joint, 45 deg Elbow 49
DT-14 Automatic Tube Weld: Short Outlet Hygienic Clamp Joint Reducing Tee 50
DT-15 Automatic Tube Weld: Short Outlet Hygienic Clamp Joint Tee 50
DT-16 Hygienic Clamp Joint: 90 deg Elbow 51
DT-17 Hygienic Clamp Joint: 45 deg Elbow 51
DT-18 Hygienic Clamp Joint: Straight Tee and Cross 52
DT-19 Hygienic Clamp Joint: Reducing Tee 52
DT-20 Hygienic Clamp Joint: Short Outlet Reducing Tee 53
DT-21 Hygienic Clamp Joint: Concentric and Eccentric Reducer 53
DT-22 Automatic Tube Weld: Ferrule 54
DT-23 Automatic Tube Weld: 180 deg Return Bend 54
DT-24 Hygienic Clamp Joint: 180 deg Return Bend 55
DT-25 Hygienic Mechanical Joint: Short Outlet Run Tee 55
DT-26 Hygienic Clamp Joint: Tube Weld Concentric and Eccentric Reducer 56
DT-27 Hygienic Clamp Joint: Short Outlet Tee 56
DT-28 Automatic Tube Weld: Instrument Tee 56
DT-29 Hygienic Clamp Joint: Instrument Tee 57
DT-30 Automatic Tube Weld: Cap 57
SF-1 Acceptance Criteria for Interior Surface Finishes of Tubing 66
SF-2 R_a Readings for Tubing 67
SF-3 Acceptance Criteria for Interior Surface Finishes of Fittings 68
SF-4 R_a Readings for Fittings 68
SF-5 Acceptance Criteria for Interior Surface Finishes of Valve Bodies 69
SF-6 R_a Readings for Valves 69
SF-7 Acceptance Criteria for Interior Surface Finishes of Vessels 70
SF-8 R_a Readings for Vessels 70
SG-1 Common Rotary Seal Materials for Biochemical and Sterile Service 77

Nonmandatory Appendix

A Commentary: Slag 85

Index 86

Copyright ASME International
Provided by IHS under license with ASME
No reproduction or networking permitted without license from IHS
Not for Resale

(02)

FOREWORD

At the 1988 ASME Winter Annual Meeting (WAM), many individuals expressed interest in developing standards for the design of equipment and components for use in the biopharmaceutical industry. As a result of this interest, the ASME Council on Codes and Standards (CCS) was petitioned to approve this as a project. The initial scope was approved by the CCS on June 20, 1989, with a directive to the Board on Pressure Technology to initiate this project with the following initial scope:

> This standard is intended for design, materials, construction, inspection, and testing of vessels, piping, and related accessories such as pumps, valves, and fittings for use in the biopharmaceutical industry. The rules provide for the adoption of other ASME and related national standards, and when so referenced become part of the standard.

At the 1989 WAM, an ad hoc committee was formed to assess the need to develop further the scope and action plan. The committee met in 1990 and there was consensus concerning the need to develop standards that would meet the requirements of operational bioprocessing, including:

(a) the need for equipment designs that are both cleanable and sterilizable;

(b) the need for special emphasis on the quality of weld surfaces once the required strength is present;

(c) the need for standardized definitions that can be used by material suppliers, designers/fabricators, and users; and

(d) the need to integrate existing standards covering vessels, piping, appurtenances, and other equipment necessary for the biopharmaceutical industry without infringing on the scopes of those standards.

The BPE Main Committee was structured with six functioning subcommittees and an executive committee comprising the main committee chair and the subcommittee chairs. The subcommittees are:

(a) General Requirements;

(b) Design Relating to Sterility and Cleanability of Equipment;

(c) Dimensions and Tolerances;

(d) Material Joining;

(e) Surface Finishes; and

(f) Seals.

Throughout the development of the Standard, close liaison was made with the European CEN, ASTM, and the AAA Dairy Standards. The purpose was to develop an ASME standard that would be distinctive, germane, and not in conflict with other industry standards. Wherever possible, the Committee strived to reference existing standards that are applicable to biopharmaceutical equipment design and fabrication.

This Standard represents the work of the BPE Standards Committee and includes the following Parts:

(a) General Requirements;

(b) Design for Sterility and Cleanability;

Copyright ASME International
Provided by IHS under license with ASME
No reproduction or networking permitted without license from IHS
Not for Resale

(c) Dimensions and Tolerances for Stainless Steel Automatic Welding and Hygienic Clamp Tube Fittings;

(d) Material Joining;

(e) Stainless Steel and Higher Alloy Interior Surface Finishes; and

(f) Equipment Seals.

This edition was approved as an American National Standard on January 24, 2002.

Requests for interpretations or suggestions for revision should be sent to Paul Stumpf, Secretary, BPE Committee, The American Society of Mechanical Engineers, Three Park Avenue, New York, NY 10016.

Copyright ASME International
Provided by IHS under license with ASME
No reproduction or networking permitted without license from IHS
Not for Resale

STATEMENT OF POLICY ON THE USE OF ASME MARKS AND CODE AUTHORIZATION IN ADVERTISING

ASME has established procedures to authorize qualified organizations to perform various activities in accordance with the requirements of the ASME codes and standards. It is the aim of the Society to provide recognition of organizations so authorized. An organization holding authorization to perform various activities in accordance with the requirements of the codes and standards may state this capability in its advertising literature.

Organizations that are authorized to use Symbol Stamps for marking items or constructions that have been constructed and inspected in compliance with ASME codes and standards are issued Certificates. It is the aim of the Society to maintain the standing of the Symbol Stamps for the benefit of the users, the enforcement jurisdictions, and the holders of the Stamps who comply with all requirements.

Based on these objectives, the following policy has been established on the usage in advertising of facsimiles of the symbols, certificates, and references to codes or standards construction. The American Society of Mechanical Engineers does not "approve," "certify," "rate," or "endorse" any item, construction, or activity and there shall be no statements or implications that might so indicate. An organization holding a Symbol Stamp and/or a Certificate may state in advertising literature that items, constructions, or activities "are built (produced or performed) or activities conducted in accordance with the requirements of the applicable ASME code or standard."

The ASME Symbol Stamp shall be used only for stamping and nameplates as specifically provided in the code or standard. However, facsimiles may be used for the purpose of fostering the use of such construction. Such usage may be by an association or a society, or by a holder of a Symbol Stamp who may also use the facsimile in advertising to show that clearly specified items will carry the symbol. General usage is permitted only when all of a manufacturer's items are constructed under the rules of the applicable code or standard.

The ASME logo, which is the cloverleaf with the letters ASME within, shall not be used by any organization other than ASME.

STATEMENT OF POLICY ON THE USE OF ASME MARKING TO IDENTIFY MANUFACTURED ITEMS

The ASME codes and standards provide rules for the construction of various items. These include requirements for materials, design, fabrication, examination, inspection, and stamping. Items constructed in accordance with all of the applicable rules of ASME are identified with the official Symbol Stamp described in the governing code or standard.

Markings such as "ASME" and "ASME Standard" or any other marking including "ASME" or the various Symbol Stamps shall not be used on any item that is not constructed in accordance with all of the applicable requirements of the code or standard.

Items shall not be described on ASME Data Report Forms nor on similar forms referring to ASME which tend to imply that all requirements have been met when in fact they have

Copyright ASME International
Provided by IHS under license with ASME
No reproduction or networking permitted without license from IHS
Not for Resale

not been met. Data Report Forms covering items not fully complying with ASME requirements shall not refer to ASME or they shall clearly identify all exceptions to the ASME requirements.

ASME's role as an accrediting rather than certifying organization shall be made clear on stampings, labels, or nameplate markings by inclusion of the words: Certified by _____.
(Fabricator)

Copyright ASME International
Provided by IHS under license with ASME
No reproduction or networking permitted without license from IHS
Not for Resale

ASME BIOPROCESSING EQUIPMENT COMMITTEE

(The following is the roster of the Committee as of August 7, 2001.)

OFFICERS

A. P. Cirillo, *Chair*
B. K. Henon, *Vice Chair*
P. D. Stumpf, *Secretary*

COMMITTEE PERSONNEL

J. Ankers, Phoenix Imperative, Inc.
D. D. Baram, Consultant
H. D. Baumann, H. D. Baumann Associates Ltd.
E. A. Benway, Swagelok Co.
N. R. Brooks, Fluor Daniel, Inc.
C. R. Brown, Swagelok Co.
W. H. Cagney, Kinetics Biopharm
A. P. Cirillo, Jacobs Engineering Group, Inc.
D. Coleman, ICOS Corp.
J. A. DeClark, Trent Tube
P. G. El-Sabaaly, Alloy Products Corp.
E. B. Fisher, Fisher Engineering
B. K. Henon, Arc Machines, Inc.
M. A. Hohmann, Eli Lilly & Co.
T. Hoobyar, Asepco
J. T. Mahar, Cuno, Inc.
F. J. Manning, Tek Supply, Inc.
L. J. Peterman, Robert-James Sales
D. P. Sisto, Purity Systems, Inc.
D. Smith, Consultant
C. A. Trumbull, Paul Mueller Co.
P. D. Stumpf, The American Society of Mechanical Engineers
W. J. Vong, Abbott Laboratories
R. J. Zinkowski, ITT Engineered Valves

EXECUTIVE COMMITTEE

A. P. Cirillo, *Chair,* Jacobs Engineering Group, Inc.
J. Ankers, Phoenix Imperative, Inc.
E. A. Benway, Swagelok Co.
C. R. Brown, Swagelok Co.
W. H. Cagney, Kinetics Biopharm
P. G. El-Sabaaly, Alloy Products Corp.
B. K. Henon, Arc Machines, Inc.
F. J. Manning, Tek Supply, Inc.
L. J. Peterman, Robert-James Sales
C. Trumbull, Paul Mueller Co.

Copyright ASME International
Provided by IHS under license with ASME
No reproduction or networking permitted without license from IHS
Not for Resale

SUBCOMMITTEE ON GENERAL REQUIREMENTS AND EDITORIAL REVIEW

E. A. Benway, *Chair,* Swagelok Co.
D. D. Baram, Consultant
C. R. Brown, Swagelok Co.
W. H. Cagney, Kinetics Biopharm
R. Campbell, Purity Systems, Inc.
A. P. Cirillo, Jacobs Engineering Group, Inc.
B. K. Henon, ARC Machines, Inc.
M. A. Hohmann, Eli Lilly & Co.

SUBCOMMITTEE ON DESIGN RELATING TO STERILITY AND CLEANABILITY OF EQUIPMENT

J. Ankers, *Chair,* Phoenix Imperative, Inc.
B. E. Fisher, *Vice Chair,* Fisher Engineering
M. A. Atzor, Bayer Corp.
W. K. Black, Cashco
N. R. Brooks, Fluor Daniel, Inc.
P. G. El-Sabaaly, Alloy Products Corp.
M. Gagne, AlphaBio, Inc.
T. Hoobyar, Asepco
M. W. Keller, Amgen, Inc.
A. Konopka, Eli Lilly & Co.
J. Mahar, Cuno, Inc.
S. Miller, SmithKline Beecham
M. Pelletier, NEOSE
R. Perusek, Swagelok Co.
R. E. Trub, Alfa Laval Separations
V. Tsui, Elan Pharmaceuticals
E. Vong, Abbott Laboratories
R. T. Warf, Merck & Co., Inc.
R. J. Zinkowski, ITT Engineered Valves

SUBCOMMITTEE ON DIMENSIONS AND TOLERANCES

F. J. Manning, *Chair,* Tek Supply, Inc.
J. A. Declark, Trent Tube
J. Dvorscek, Abbott Laboratories
R. K. Fisher, Swagelok Co.
M. M. Gonzalez, Fluor Daniel Co.
S. T. Joy, Jensen Fittings Corp.
J. T. Mahar, Cuno, Inc.
D. J. Mathien, Alfa Laval Flow, Inc.
P. McLune, ITT Engineered Valves
H. Murphy, Global Stainless
D. Perona, Advance Fittings Corp.
L. J. Peterman, Robert-James Sales
P. J. Sibley, Waukesha Cherry Burrell
C. Taylor, Waukesha Cherry Burrell
P. Trunzo, Jensen Fittings Corp.
T. Wolfe, Fluidline Technology

SUBCOMMITTEE ON MATERIAL JOINING

C. A. Trumbull, *Chair,* Paul Mueller Co.
R. D. Campbell, *Vice Chair,* Purity Systems, Inc.

Copyright ASME International
Provided by IHS under license with ASME
No reproduction or networking permitted without license from IHS
Not for Resale

E. A. Benway, Swagelok Co.
J. Dvorscek, Abbott Laboratories
B. K. Henon, Arc Machines, Inc.
M. A. Hohmann, Eli Lilly & Co.
P. McLune, ITT Engineered Valves
N. Oliver, MECO
P. J. Sibley, Waukesha Cherry Burrell
D. P. Sisto, Purity Systems, Inc.
T. Sixsmith, Advanced Industrial Designs, Inc.
C. Weeks, Kinetics

SUBCOMMITTEE ON SURFACE FINISH

P. G. El-Sabaaly, *Chair,* Alloy Products Corp.
J. A. Declark, *Vice Chair,* Trent Tube
R. Becker, Tri-Clover, Inc.
D. C. Coleman, ICOS Corp.
R. K. Fisher, Swagelok Co.
M. M. Gonzalez, Fluor Daniel Co.
B. K. Henon, Arc Machines, Inc.
F. J. Manning, Tek Supply, Inc.
D. J. Mathien, Alfa Laval Flow, Inc.
N. Olivier, MECO
D. Perona, Advance Fittings Corp.
C. Stephens, Tri-Clover, Inc.
C. Taylor, Waukesha Cherry Burrell
V. Tsui, Elan Pharmaceuticals
R. J. Zinkowski, ITT Engineered Valves

SUBCOMMITTEE ON SEALS

C. R. Brown, *Chair,* Swagelok Co.
D. D. Baram, Consultant
A. Kranc, Morrisville, NC
M. Pelletier, NEOSE
L. J. Peterman, Robert-James Sales
R. J. Zinkowski, ITT Engineered Valves

Copyright ASME International
Provided by IHS under license with ASME
No reproduction or networking permitted without license from IHS
Not for Resale

ASME BPE-2002
SUMMARY OF CHANGES

Following approval by the ASME BPE Committee and ASME, and after public review, ASME BPE-2002 was approved by the American National Standards Institute on January 24, 2002.

Addenda to this edition are issued in the form of replacement pages. Revisions, additions, and deletions are incorporated directly into the affected pages. It is advisable, however, that this page, the Addenda title and copyright pages, and all replaced pages be retained for reference.

Page	*Location*	*Change*
viii, ix	Foreword	Updated to reflect the 2002 edition
1	GR-1	Last paragraph revised
	GR-2	Revised
2, 3, 7	GR-5.1	Editorially revised
	GR-5.2	Editorially revised
	GR-6	Editorially revised
	GR-7	Revised
	GR-9	(1) AWS D18.2 reference added (2) Publisher information added
	GR-10	(1) Definition of *arc strike* revised (2) Definition of *burn-through* revised (3) Definition of *burr* revised (4) Definition of *sanitary (hygienic) weld* added
9	SD-1	Revised
	SD-2	Revised
	SD-3	Revised
	SD-3.1.2	Revised
	SD-3.1.3	Revised
	SD-3.1.4	Revised
	SD-3.1.5	Revised
	SD-3.1.6	Revised
	SD-3.1.7	(1) Renumbered (formerly SD-3.1.9); former SD-3.1.7 and SD-3.1.8 deleted (2) Revised
10, 11	SD-3.1.8	(1) Renumbered (formerly SD-3.1.10) (2) Revised

Copyright ASME International
Provided by IHS under license with ASME
No reproduction or networking permitted without license from IHS
Not for Resale

Page	*Location*	*Change*
		(3) Subparagraph (b) deleted
	SD-3.2	(1) Revised in its entirety (2) SD-3.2.4 deleted
	SD-3.3.1	Revised
	SD-3.3.2	Revised
	SD-3.4	(1) Revised in its entirety (2) Former SD-3.4.4 deleted and subsequent paragraphs renumbered (3) SD-3.4.9 deleted
	SD-3.5	(1) Revised in its entirety (2) Former SD-3.5.2 deleted and subsequent paragraphs renumbered
	SD-3.6	(1) Revised in its entirety (2) SD-3.6.6 through SD-3.6.8 deleted
	SD-3.7.1	Revised
	SD-3.7.2	Revised
	SD-3.7.4	Revised
	SD-3.7.6	Renumbered (formerly SD-3.7.7); former SD-3.7.6 deleted
	SD-3.7.7	(1) Renumbered (formerly SD-3.7.8) (2) Revised
	SD-3.7.8	(1) Renumbered (formerly SD-3.7.10); former SD-3.7.9 deleted (2) Revised
	SD-3.7.9	(1) Renumbered (formerly SD-3.7.11) (2) Revised
12	Fig. SD-1	Illustrations (c) and (d) revised
13, 14	SD-3.8	Revised in its entirety
	SD-3.9	(1) Revised in its entirety (2) SD-3.9.2 deleted
	SD-3.10	(1) Revised in its entirety (2) SD-3.10.4 and SD-3.10.5 deleted
	SD-3.11	(1) Revised in its entirety (2) Former SD-3.11.2 deleted and subsequent paragraphs renumbered (3) Former SD-3.11.17 deleted and subsequent paragraphs renumbered
16–18	SD-3.12	(1) Revised in its entirety (2) SD-3.12.5 renumbered (formerly SD-3.12.6); former SD-3.12.5 deleted

Copyright ASME International
Provided by IHS under license with ASME
No reproduction or networking permitted without license from IHS
Not for Resale

Page	*Location*	*Change*
	Table SD-2	Renumbered (formerly Table SD-2A)
	Table SD-3	Renumbered (formerly Table SD-2B)
	SD-4.1	Revised in its entirety
	Table SD-4	Renumbered (formerly Table SD-2C)
19, 20	Table SD-5	Renumbered (formerly Table SD-3)
	SD-4.2.1	Revised
	SD-4.3	Revised in its entirety
21	Fig. SD-3	Illustration (c) revised
22	Fig. SD-4	Illustrations (a) through (d) revised
23–36	SD-4.4	Revised in its entirety
	SD-4.5	Revised in its entirety
	SD-4.6.1	Subparagraphs (e) through (k) revised
	SD-4.6.2	Revised in its entirety
	SD-4.6.3	Revised
	SD-4.7	(1) Revised in its entirety (2) Former SD-4.7.2 deleted and subsequent paragraphs renumbered
	SD-4.8.1	(1) Revised in its entirety (2) Former subpara. (l) moved to subpara. SD-4.8.4(e) (3) Former subpara. (m) moved to subpara. SD-4.8.5(e) (4) Former subpara. (n) moved to subpara. SD-4.8.6(e) (5) Former subpara. (p) moved to subpara. SD-4.8.7(c) (6) Remaining subparagraphs relettered
	SD-4.8.2	Revised in its entirety
	SD-4.8.3	Revised
	SD-4.8.4	(1) Revised (2) Subparagraph (e) added from former subpara. SD-4.8.1(l)
	SD-4.8.5	(1) Revised (2) Subparagraph (e) added from former subpara. SD-4.8.1(m)
	SD-4.8.6	(1) Revised (2) Subparagraph (e) added from former subpara. SD-4.8.1(n)
	Fig. SD-20	Illustration (c) revised

Copyright ASME International
Provided by IHS under license with ASME
No reproduction or networking permitted without license from IHS
Not for Resale

Page	*Location*	*Change*
	SD-4.8.7	(1) Revised (2) Subparagraph (c) added from former subpara. SD-4.8.1(p)
	SD-4.9.1	Revised in its entirety
37	SD-4.9.2	(1) Renumbered (formerly SD-4.9.3) (2) Former SD-4.9.2 incorporated into SD-4.9.1
	SD-4.9.3	Renumbered (formerly SD-4.9.5); former SD-4.9.4 deleted
38	SD-4.14	Revised
39	SD-4.15.2(j)	Revised
40	Table SD-6	(1) Renumbered (formerly Table SD-4) (2) Revised
	Table SD-7	Renumbered (formerly Table SD-5)
43–46	Part DT	Title revised to include "Process Components"
	DT-1	Revised
	DT-3	Revised in its entirety
	DT-4	Second paragraph revised
	DT-5	Revised
	Table DT-1	Revised
	Table DT-3	Caption revised
	Table DT-4	Revised
	DT-6	Revised
	Table DT-5	Revised
	DT-8	Revised
	Table DT-6	Revised
	Table DT-7	Revised
	DT-9	Revised
	DT-10	Revised
	DT-12	Revised
	DT-13	Revised
47–56	Tables DT-8 through DT-26	Revised
56, 57	Tables DT-27 through DT-30	Added
58	MJ-2.6	Revised
59, 60	MJ-6.1	Revised
	MJ-6.3	Revised

Copyright ASME International
Provided by IHS under license with ASME
No reproduction or networking permitted without license from IHS
Not for Resale

Page	*Location*	*Change*
	MJ-6.4	(1) Paragraph added (2) Former fourth paragraph from MJ-7.2.3 added and revised
	MJ-6.4.1	Revised
	MJ-6.4.2(b)	Revised
	MJ-6.4.3	Revised
	MJ-6.4.5	Revised
	MJ-6.4.8	Revised
62	MJ-6.5	Added
	MJ-7.2	Revised
	MJ-7.2.3	(1) Third paragraph revised (2) Former fourth paragraph moved to MJ-6.4
63, 64	MJ-10	Revised in its entirety
65	SF-3(c)	Revised
	SF-4(d)	Revised
	SF-5(a)(3)	Revised
	SF-5(b)(2)(b)	Revised
	SF-5(b)(2)(d)	Revised
66	Table SF-1	Revised
	SF-8	First sentence revised
67–70	Tables SF-2 through SF-8	Revised
72, 73	SG-3.1.7	Revised
	SG-3.2.2	Revised
	SG-3.3.1(b)	Title revised
	SG-3.3.1(d)(4)	Added
	SG-3.3.2	Revised
	SG-3.4.1	Revised
	SG-3.4.2	Revised
	SG-3.5	Revised
81	SG-4.1.1.3	Revised
	SG-4.1.1.4	Revised
	SG-4.1.1.5	Revised
85	Nonmandatory Appendix A	Added
86–88	Index	Added

Copyright ASME International
Provided by IHS under license with ASME
No reproduction or networking permitted without license from IHS
Not for Resale

BIOPROCESSING EQUIPMENT

PART GR
GENERAL REQUIREMENTS

(02) GR-1 INTRODUCTION

This Standard provides the requirements applicable to the design of bioprocessing equipment, including aspects related to sterility and cleanability, dimensions and tolerances, surface finish, material joining, and seals. These apply to:

(a) components that are in contact with the product, raw materials, or product intermediates during manufacturing, development, or scale-up;

(b) systems that are a critical part of product manufacture [e.g., water-for-injection (WFI), clean steam, filtration, and intermediate product storage].

This Standard does not apply to those components of the system that are not in contact with the finished product or are a part of the intermediate manufacturing stages (e.g., computer systems, electrical conduits, and external system support structures).

Steam sterilized systems normally meet pressure vessel design codes. Other equipment or systems as agreed to by the manufacturer and owner/user may not require adherence to these codes.

When operating under pressure conditions, the systems shall be constructed in accordance with the ASME Boiler and Pressure Vessel Code (BPVC), Section VIII, Division 1, and the ASME B31.3, Process Piping Code, respectively. The owner/user can stipulate additional specifications and requirements. When an application is covered by laws or regulations issued by an Enforcement Authority (e.g., municipal, provincial, state, or federal), the final construction requirements shall comply with these laws. However, all the previously mentioned construction codes shall be satisfied including those instances where these codes are not referred to in the current BPE Standard (e.g., weld acceptance criteria, inspection requirements, pressure testing, etc.).

(02) GR-2 SCOPE

This Standard deals with the requirements of the bioprocessing industry, covering directly or indirectly the subjects of materials, design, fabrications, pressure systems (vessels and piping), examinations, inspections, testing, and certifications. Items or requirements that are not specifically addressed in this Standard cannot be considered prohibited. Engineering judgments must be consistent with the fundamental principles of this Standard. Such judgments shall not be used to overrride mandatory regulations or specific prohibitions of this Standard.

GR-3 INSPECTION

The inspection requirements are specified in each Part of this Standard. If an inspection or examination plan is required, it shall be developed and agreed to by the owner/user, contractor, inspection contractor, and/or engineer ensuring that the systems and components meet this Standard.

GR-4 INSPECTOR/EXAMINER

Inspector and examiner in this Standard shall be defined for:

(a) Pressure Vessels. An Authorized Inspector, as defined in ASME BPVC, Section VIII, Division 1, para. UG-91;

(b) Piping, Tubing, and Non-Code Vessels. An owner/user's inspector, as defined in ASME B31.3, para. 340.4(a); and

(c) Piping and Tubing. An examiner, defined as a person who performs quality control examinations for a manufacturer as an employee of the manufacturer as defined in ASME B31.3, para. 341.1.

When local regulations require that pressure equipment be designed and constructed in accordance with standards other than ASME codes/standards, the inspector in this Standard is defined as one who is acceptable to the relevant regulatory authority.

Copyright ASME International
Provided by IHS under license with ASME
No reproduction or networking permitted without license from IHS
Not for Resale

GR-5 RESPONSIBILITIES

The responsibilities of inspection personnel are defined as follows.

(02) GR-5.1 Pressure Vessels

The responsibilities of the owner's Inspector shall be the same as the inspector in ASME BPVC, Section VIII, Division 1, UG-91.

(02) GR-5.2 Piping, Tubing, and Noncode Vessels

The responsibilities of the owner/user's inspector shall be in accordance with ASME B31.3, para. 340.2.

(02) GR-6 ACCESS FOR INSPECTORS

Manufacturers of bioprocessing equipment and components shall allow free access of owner/user and authorized inspection personnel at all times while work on the equipment or components is being performed. The notification of an impending inspection should be mutually agreed to by the manufacturer and the inspector. Access may be limited to the area of the manufacturer's facility where assembly, fabrication, welding, and testing of the specific equipment or components is being performed. Inspectors shall have the right to audit any examination, to inspect components using any examination method specified in the Design Specification (including Purchase Order), and review all certifications and records necessary to satisfy the requirements of GR-5. The manufacturer shall provide the inspector with work progress updates.

(02) GR-7 MANUFACTURER'S QUALITY ASSURANCE PROGRAM

The manufacturer shall implement a quality assurance program describing the systems, methods, and procedures used to control materials, drawings, specifications, fabrication, assembly techniques, and examination/inspection used in the manufacturing of bioprocessing equipment.

GR-8 METRIC

Metric units in this Standard are conversions from U. S. Customary units, and are for reference purposes only unless specified otherwise.

GR-9 REFERENCES (02)

For the purpose of this Standard, the most recent approved version of the following referenced standards shall apply.

ANSI/AWS A3.0, Standard Welding Terms and Definitions
ANSI/AWS QC-1, Standard for AWS Certification of Welding Inspectors
AWS D18.2, Guide to Weld Discoloration Levels on the Inside of Austenitic Stainless Steel Tube

Publisher: American Welding Society (AWS), 550 NW LeJeune Road, Miami, FL 33135

ASME Boiler and Pressure Vessel Code, Section V, Nondestructive Examination
ASME Boiler and Pressure Vessel Code, Section VIII, Division 1, Pressure Vessels
ASME Boiler and Pressure Vessel Code, Section IX, Welding and Brazing Qualifications
ASME B31.1, Power Piping
ASME B31.3, Process Piping
ASME B46.1, Surface Texture (Surface Roughness, Waviness, and Lay)

Publisher: American Society of Mechanical Engineers (ASME), Three Park Avenue, New York, NY 10016; Order Department: 22 Law Drive, Box 2300, Fairfield, NJ 07007

ASTM A 20/A 20M, Standard Specification for General Requirements for Steel Plates for Pressure Vessels
ASTM A 182/A 182M, Specification for Forged or Rolled Alloy-Steel Pipe Flanges, Forged Fittings, and Valves and Parts for High-Temperature Service
ASTM A 213/A 213M, Specification for Seamless Ferritic and Austenitic Alloy-Steel Boiler, Super Heater, and Heat-Exchanger Tubes
ASTM A 269, Seamless and Welded Austenitic Stainless Steel Tubing for General Service
ASTM A 270, Specification for Seamless and Welded Austenitic Stainless Steel Sanitary Tubing
ASTM A 312/A 312M, Seamless and Welded Austenitic Stainless Steel Pipes
ASTM A 351/A 351M, Specification for Casting, Austenitic, Austenitic-Ferritic (Duplex), for Pressure-Containing Parts
ASTM A 380, Practice for Cleaning and Descaling Stainless Steel Parts, Equipment, and Systems
ASTM A 480/A 480M, Specification for General Requirements for Flat-Rolled Stainless and Heat-Resisting Steel Plate, Sheet, and Strip

Copyright ASME International
Provided by IHS under license with ASME
No reproduction or networking permitted without license from IHS
Not for Resale

ASTM A 484/A 484M, Specification for General Requirements for Stainless and Heat-Resisting Steel Bars, Billets, and Forgings
ASTM A 666, Specification for Austenitic Stainless Steel Sheet, Strip, Plate, and Flat Bar
ASTM E 112, Test Methods for Determining the Average Grain Size
Publisher: American Society for Testing and Materials (ASTM), 100 Barr Harbor Drive, West Conshohocken, PA 19428

FDA, 21 CFR, Parts 210 and 211, Current Good Manufacturing Practices
cGMP: current Good Manufacturing Practices, Title 21 of the Food and Drug Administration
Publisher: U.S. Food and Drug Administration (U.S. FDA), 5600 Fishers Lane, Rockville, MD 20857

NIH (BL-1/BL-4), Biohazard Containment Guidelines
Publisher: National Institutes of Health (NIH), Bethesda, MD 20892

SNT-TC-1A, Recommended Practice for Nondestructive Testing Personnel Qualification and Certification
Publisher: American Society for Nondestructive Testing (ASNT), 1711 Arlingate Lane, P.O. Box 28518, Columbus, OH 43228

3-A, Sanitary Standards
Publisher: Techstreet, 1327 Jones Drive, Ann Arbor, MI 48105

GR-10 TERMS AND DEFINITIONS

annealing: a treatment process for steel for the purpose of reducing hardness, improving machinability, facilitating cold working, or producing a desired mechanical, physical, or other property.

anomaly: a localized surface area that is out of specifications to the surrounding area, and is classified as abnormal.

(02) *arc strike:* a discontinuity consisting of any localized remelted metal, heat-affected metal, or change in the surface profile of any part of a weld or base metal resulting from an arc, generated by the passage of electrical current between the surface of the weld or base material and a current source, such as a welding electrode, magnetic particle prod, or electropolishing electrode.

aseptic: free of pathogenic (causing or capable of causing disease) microorganisms.

aseptic processing: operating in a manner that prevents contamination of the process.

autogenous weld: a weld made by fusion of the base material without the addition of filler. (See also *gas tungsten-arc welding.*)

automatic welding: welding with equipment that performs the welding operation without adjustment of the controls by a welding operator. The equipment may or may not perform the loading and unloading of the work. (See also *machine welding.*)

biologics: therapeutic or diagnostic products generated and purified from natural sources.

biopharmaceuticals: ethical pharmaceutical drugs derived through bioprocessing.

bioprocessing: the creation of a product utilizing a living organism.

bioprocessing equipment: equipment, systems, or facilities used in the creation of products utilizing living organisms.

break: a discontinuity in the face of a fitting.

burn-through: excessive melt-through or a hole through the root bead of a weld. **(02)**

burr: excess material protruding from the edge typically resulting from operations such as cutting or facing. **(02)**

butt joint: a joint between two members lying approximately in the same plane.

cavitation: a condition of liquid flow where, after vaporization of the liquid, the subsequent collapse of vapor bubbles can produce surface damage.

certification: documented testimony by qualified authorities that a system qualification, calibration, validation, or revalidation has been performed appropriately and that the results are acceptable.

cGMPs: current Good Manufacturing Practices. Current design and operating practices developed by the pharmaceutical industry to meet FDA requirements as published in the Code of Federal Regulations, Chapter 1, Title 21, Parts 210 and 211.

chromatography: the purification of substances based on the chemical, physical, and biological properties of the molecules involved.

clean: free of dirt, residues, detergents, or any contaminants that may affect or adulterate the product or process.

Copyright ASME International
Provided by IHS under license with ASME
No reproduction or networking permitted without license from IHS
Not for Resale

clean-in-place (CIP): internally cleaning a piece of equipment without relocation or disassembly. The equipment is cleaned but not necessarily sterilized. The cleaning is normally done by acid, caustic, or a combination of both, with Water-for-Injection (WFI) rinse.

clean steam: steam free from boiler additives that may be purified, filtered, or separated. Usually used for incidental heating in pharmaceutical applications.

cloudiness: the appearance of a milky white hue across some portion of a surface resulting from the electropolish process.

cluster porosity: porosity that occurs in clumps or clusters.

concavity: a condition in which the surface of a welded joint is depressed relative to the surface of the tube or pipe. Concavity is measured as a maximum distance from the outside or inside diameter surface of a welded joint along a line perpendicular to a line joining the weld toes.

consumable insert: a ring of metal placed between the two elements to be welded that provides filler for the weld, when performed with fusion welding equipment. A consumable insert can also be used for the root pass in a multiple pass weld with the addition of filler wire (also called *insert ring*).

convexity: a condition in which the surface of a welded joint is extended relative to the surface of the tube or pipe. Convexity is measured as a maximum distance from the outside or inside diameter surface of a welded joint along a line perpendicular to a line joining the weld toes.

cracks: fracture-type discontinuities characterized by a sharp tip and high ratio of length and width to opening displacement. A crack may not be detected with a stylus. A linear crack will produce a liquid penetrant indication during liquid penetration inspection, X-ray, or ultrasound.

crater: a depression at the termination of a weld bead.

crater cracks: cracks that form in the crater, or end, of the weld bead.

dead leg: an area of entrapment in a vessel or piping run that could lead to contamination of the product.

defects: discontinuities that by nature or accumulated effect (for example, total crack length) render a part or product unable to meet minimum applicable acceptable standards or specifications. This term designates rejectability. (See also *discontinuity*.)

delamination: separation into constituent layers.

demarcation: a localized area that is dissimilar to the surrounding areas with a defined boundary after electropolishing.

dent: a large, smooth-bottomed depression whose diameter or width is greater than its depth and which will not produce an indication.

dirty: a relative term indicating the condition of being contaminated.

discoloration: any change in surface color from that of the base metal. Usually associated with oxidation occurring on the weld and heat-affected zone on the outside diameter and inside diameter of the weld joint as a result of heating the metal during welding. Colors may range from pale bluish-gray to deep blue, and from pale straw color to a black crusty coating.

discontinuity: interruption of the typical structure of a weldment, such as a lack of homogeneity in the mechanical, metallurgical, or physical characteristics of the material or weldment. A discontinuity is not necessarily a defect.

downslope: that part of an automatic orbital weld sequence during which the welding current is gradually reduced prior to extinguishing of the welding arc. The downslope portion of a welded joint is seen as a tapering of the end of the weld bead with a reduction of penetration from the beginning to the end of the downslope so that the final weld bead is small with minimal penetration.

dross: a concentration of impurity formed in the weld puddle. It floats to the surface when the metal solidifies (also called slag).

elastomeric material: a material that can be stretched or compressed repeatedly and, upon immediate release of stress, will return to its approximate original size.

ethical pharmaceutical: a controlled substance for the diagnosis or treatment of disease.

excessive penetration: weld penetration that exceeds the acceptance limit for inside diameter convexity. (See also *convexity*.)

fermentation: the biochemical synthesis of organic compounds by microorganisms or cultivated cells.

Copyright ASME International
Provided by IHS under license with ASME
No reproduction or networking permitted without license from IHS
Not for Resale

fermentor (fermenter): a vessel for carrying out fermentation.

full penetration: A weld joint is said to be fully penetrated when the depth of the weld extends from its face into the weld joint so that the joint is fully fused. For a tube-to-tube weld, no unfused portions of the weld joint shall be visible on the inside diameter of a fully penetrated weld.

fusion: the melting together of filler metal and base metal, or of base metal only, that results in coalescence.

fusion welding: welding in which the base material is fused together without the addition of filler material to the weld. (See also *gas tungsten-arc welding.*)

gas tungsten-arc welding (GTAW): an arc welding process that produces coalescence of metals by heating them with an arc between a tungsten (nonconsumable) electrode and the work. Shielding is obtained from a gas or gas mixture. (This process is sometimes called TIG welding, a nonpreferred term.) GTAW may be performed by adding filler material to the weld, or by a fusion process in which no filler is added.

GMP facility: a facility designed, constructed, and operated in accordance with cGMP guidelines established by the FDA.

harvesting: the separation of cells from growth media. This can be accomplished by filtration, precipitation, or centrifugation.

heat number: an alphanumeric identification of a stated tonnage of metal obtained from a continuous melting in a furnace.

heat-affected zone: that portion of the base metal that has not been melted, but whose microstructure or mechanical properties have been altered by the heat of welding or cutting.

hold-up volume: the volume of liquid remaining in a vessel or piping system after it has been allowed to drain.

hydrotest: a pressure test of piping, pressure vessels, or pressure-containing parts, usually performed by pressurizing the internal volume with water at a pressure determined by the applicable code.

hygienic: of or pertaining to equipment and piping systems that by design, materials of construction, and operation provide for the maintenance of cleanliness so that products produced by these systems will not adversely affect human or animal health.

hygienic clamp joint: a tube outside diameter union consisting of two neutered ferrules having flat faces with a concentric groove and mating gasket that is secured with a clamp, providing a nonprotruding, recessless product contact surface.

hygienic joint: a tube outside diameter union providing a nonprotruding, recessless product contact surface.

icicles: localized regions of excessive penetration, which usually appear as long, narrow portions of weld metal on the weld underbead. (See also *convexity* and *excessive penetration.*)

inclusions: particles of foreign material in a metallic matrix. The particles are usually compounds such as oxides, sulfides, or silicates, but may be any substance foreign to and essentially insoluble in the matrix.

incomplete fusion (or lack of fusion): a weld discontinuity in which fusion did not occur between weld metal and faces or between adjoining weld beads. Also, in welding of tubing, when the weld fully penetrates the wall thickness but misses the joint, leaving some portion of the inner (inside diameter) weld joint with unfused edges.

incomplete penetration (or lack of penetration): a groove weld in which the weld metal does not extend completely through the joint thickness.

indication: a condition or an anomaly of a localized area that has not been classified as being accepted or rejected.

joint penetration: the depth that a weld extends from its face into a joint, exclusive of reinforcement.

lack of fusion after reflow: a discontinuity in welding of tubing where, after a reflow or second weld pass has been made, the original joint has still not been consumed, leaving the weld joint with unfused edges on the inner surface.

lamellar tears: terrace-like fractures in the base metal with a basic orientation parallel to the wrought surface; caused by the high stress in the thickness direction that results from welding.

laminations: elongated defects in a finished metal product, resulting from the rolling of a welded or other part containing a blowhole. Actually, the blowhole is stretched out in the direction of rolling.

linear porosity: porosity that occurs in a linear pattern. Linear porosity generally occurs in the root pass from inadequate joint penetration.

Copyright ASME International
Provided by IHS under license with ASME
No reproduction or networking permitted without license from IHS Not for Resale

liquid penetrant indication: refer to ASME BPVC, Section V, Article 6, para. T-600, for testing an anomaly or an indication.

machine welding: welding with equipment that performs the welding operation under the constant observation and control of a welding operator. The equipment may or may not perform the loading and unloading of the works. (See also *automatic welding.*)

manual welding: welding in which the entire welding operation is performed and controlled by hand.

material type: a commercial designation for a given chemistry range.

maximum working pressure: the pressure at which the system is capable of operating for a sustained period of time.

maximum working temperature: the temperature at which the system must operate for a sustained period of time. The maximum working temperature should relate to the maximum working pressure and the fluids involved.

meandering: of or pertaining to a weld bead that deviates from side to side across the weld joint rather than tracking the joint precisely.

micron or micrometer (μm): one-millionth of a meter.

misalignment (mismatch): axial offset of the joint members.

miter: two or more straight sections of tube matched and joined in a plane bisecting the angle of junction so as to produce a change of direction.

nick: a surface void anomaly caused by material removal or compression from the surface, whose bottom surface is usually irregular.

nominal outside diameter: a numerical identification of outside diameter to which tolerances apply.

nominal wall thickness: a numerical identification of wall thickness to which tolerances apply.

nonuniform mechanical polishing marks: a localized surface polishing pattern that is dissimilar to the surrounding area.

off angle: a measurement of face-to-face squareness.

off plane: a measurement of the offset between port centerlines or two planes.

orange peel: an appearance of a pebbly surface.

orbital welding: automatic or machine welding of tubes or pipe in-place with the electrode rotating (or orbiting) around the work. Orbital welding can be done with the addition of filler material or as a fusion process without the addition of filler.

overlap: the protrusion of weld metal beyond the weld toes or weld root. Also, in an orbital weld, that amount by which the end of the weld bead overlaps the beginning of the weld bead (not including the downslope) on a single-pass weld.

owner/user: the body upon which final possession or use rests.

oxidation: the formation of an oxide layer on a metal surface. When oxidation occurs as a result of welding, it is visible as discoloration. The discoloration or heat tint produced by oxidation has been associated with the onset of corrosion in stainless steel piping systems.

oxide layer: an area usually located in the heat-affected zone of the weldment where an oxidation reaction has taken place.

passivation: a final treatment/cleaning process used to remove free iron or other anodic contaminants from the surfaces of corrosion-resistant steel parts such that uniform formation of a passive layer is obtained.

passive layer: a passive oxidized film that forms naturally on the stainless steel surface when exposed to air or similar oxidizing environment protecting the underlying base metal from corrosion.

penetration: see *full penetration, incomplete penetration, joint penetration.*

pipe: pipe size is determined by diameter and schedule. For bioprocessing equipment, *pipe* does not include *tube.*

pit: a small surface void resulting from a localized loss of base metal by corrosion or etching, or by the removal of surface inclusions during electropolishing or passivation. A pit may or may not produce an indication during liquid penetrant inspection.

pitch: to cause to be set at a particular angle or slope. Degree of slope or elevation.

porosity: cavity-type discontinuities formed by gas entrapment during solidification.

pressure rating: pressure at which a system is designed to operate, allowing for applicable safety factors.

product contact surface: a surface that contacts raw materials, process materials, and/or product.

Copyright ASME International
Provided by IHS under license with ASME
No reproduction or networking permitted without license from IHS
Not for Resale

progressive polishing: a mechanical grinding procedure where a coarse grit material is used first and the successive operations use a finer and finer grit until the desired surface roughness is achieved.

pure steam: steam that is produced by a steam generator which, when condensed, meets requirements for Water-for-Injection (WFI).

pyrogen: a fever-producing substance.

R_a: log of the arithmetic mean of the surface profile. Usually expressed in μin. as related to roughness. (See ASME B46.1.)

reflow: a second weld pass made to correct a lack of fusion or missed joint.

reinforcement: See *convexity.*

sanitary: See *hygienic.*

(02) *sanitary (hygienic) weld:* generally considered to be a groove weld in a square butt joint made by the GTAW (or plasma) process as a fusion weld without the addition of filler material. A sanitary weld must be completely penetrated on the weld ID, with little or no discoloration due to oxidation, and be otherwise without defects that would interfere with maintenance in a clean and sterile condition.

seal weld: a weld used to obtain fluid tightness as opposed to mechanical strength.

self-draining: the elimination of all fluid from the system due to the force of gravity alone.

semi-automatic arc welding: arc welding with equipment that controls only the filler metal feed. The advance of the welding is manually controlled.

service life: the life expectancy or number of cycles for which the unit will maintain its performance.

size classification: The size of surface deficits is classified in two groups: macro, referring to indications that can be seen in adequate lighting without magnification, and micro, referring to indications that can be seen only with the aid of magnification.

slag: a concentration of nonmetallic impurities (often oxides or nitrides) that forms in the weld pool and solidifies on the underbead or weld top surface. Sometimes referred to as dross.

slope: an incline or deviation from the horizontal. A tube or pipe installed in the horizontal plane is said to slope if one end is positioned higher than the other.

sparger: a device used to agitate, oxygenate, or aerate a liquid by means of compressed air or gas.

spatter: the metal particles expelled during welding that do not form part of a weld.

square cut: a tube end cut perpendicular to the tangent plane.

squareness: face-to-face perpendicularity.

star burst: a type of indication created during the reaction of electrochemical etching process on the foreign or refractory material (dross) on the welds or base metal.

steam in place (SIP): the use of steam to sanitize or sterilize a piece of equipment without the use of an autoclave.

sterile: free from living organisms.

sterility: the absence of all life forms.

surface inclusion: particles of foreign material in a metallic matrix. The particles are usually compounds such as oxides, sulfides, or silicates, but may be a substance foreign to and essentially insoluble in the matrix.

surface residual: a foreign substance that adheres to a surface by chemical reaction, adhesion, adsorption, or ionic bonding (for example, corrosion, rouging, and staining).

system volume: total volume of liquid in the system, including equipment, piping, valving, and instrumentation.

transfer panel: a panel to which process and/or utilities are piped that mechanically precludes erroneous cross-connections.

tube: tube is sized by its nominal outside diameter. For bioprocessing equipment, *tube* does not include *pipe.*

tungsten inclusions: tungsten particles transferred into the weld deposit by occasional touching of the tungsten electrode used in the gas tungsten-arc process to the work or to the molten weld metal. These inclusions are often considered defects that must be removed and the weld repaired prior to final acceptance. Tungsten inclusions may be invisible to the unaided eye, but are readily identified in a radiograph.

unacceptable leakage: leakage level above which the system performance is considered unacceptable by the system user and applicable regulating body.

Copyright ASME International
Provided by IHS under license with ASME
No reproduction or networking permitted without license from IHS
Not for Resale

undercut: a groove melted into the base metal adjacent to the weld toe or weld root and left unfilled by weld metal.

underfill: a depression on the weld face or root surface extending below the adjacent surface of the base metal. (See also *concavity.*)

uniformly scattered porosity: porosity that is distributed in a weldment in a uniform pattern.

user: see *owner/user.*

validation: establishing documented evidence that the system does what it purports to do.

waviness: undulations or rippling of the surfaces.

weld joint design: the shape, dimensions, and configuration of the weld joint.

welding operator: one who operates machine or automatic welding equipment.

Copyright ASME International
Provided by IHS under license with ASME
No reproduction or networking permitted without license from IHS
Not for Resale

PART SD
DESIGN FOR STERILITY AND CLEANABILITY

(02) SD-1 INTRODUCTION

This Part establishes design guidelines applicable to bioprocessing equipment, components, assemblies, and systems. This Part shall be used in conjunction with other Parts of this Standard along with applicable references. Wherever "equipment" is stated in this Part, it shall mean all bioprocessing equipment, components, assemblies, and systems.

(02) SD-2 SCOPE AND PURPOSE

This Part covers closed bioprocessing systems and ancillary equipment designs. The purpose of this Part is to create a design framework using proven practices, for maintaining clean and sterile process systems. Preferred methods suggested in this Standard represent industry's accepted design practices, should be regarded only as a guideline, and are not intended to limit the choice of alternative designs. The parties (owner/user, designer, and manufacturer) are free to impose their own design criteria for achieving the necessary requirements. Figures in this Part show several levels of design and fabrication. The preferred designation represents an industry accepted design. The alternate designation represents an industry design for use when physical constraints prevent the implementation of the preferred design. They are not intended to limit new and possibly better designs. Similarly, there may be equipment being successfully used that corresponds to the sketches labeled "not recommended." This Standard covers new construction and should not be used to evaluate the acceptability of existing equipment. Cleaning can be performed either by disassembling the system [clean-out-of-place (COP)] or in situ [clean in-place (CIP)]. This Standard will only apply to CIP and steam-in-place (SIP) processes.

This Part does not cover designs relating to hot water [176°F (80°C)], ethylene oxide sanitizing/sterilizing, or other chemical methods. Nevertheless, the basic concepts presented in this Part could be applied to those applications.

This Part does not address the issue of software/hardware as it relates to the automation of the cleaning and sterilization process.

SD-3 GENERAL GUIDELINES (02)

All equipment shall be designed for the bioprocessing application, requirements, and specifications of the owner/user. It shall be the responsibility of the owner/user to specify the cleanability and sterility requirements of the equipment.

SD-3.1 Cleanability

SD-3.1.1 All surfaces shall be cleanable. Surface imperfections (e.g., crevices, gouges, obvious pits, etc.) shall be eliminated whenever feasible.

SD-3.1.2 Internal horizontal product contact surfaces (02) shall be minimized.

SD-3.1.3 The equipment shall be drainable and free (02) of areas where liquids may be retained and where soil or contaminants could collect.

SD-3.1.4 The equipment shall be free of areas of (02) low flow and low velocity or impact where soil or contaminants could collect.

SD-3.1.5 All product contact surfaces shall be acces- (02) sible to the cleaning solutions and shall be accessible to establish and determine efficacy of the cleaning protocol.

SD-3.1.6 Fasteners or threads shall not be exposed (02) to the process, steam, or cleaning fluids. The use of threads within the process requires owner/user agreement. Bolted attachments should be eliminated whenever possible.

SD-3.1.7 No engraving or embossing of materials (02) (for identification or traceability reasons) should be made on the process contact side. When markings are required on process contact surfaces, other methods of identification should be used.

Copyright ASME International
Provided by IHS under license with ASME
No reproduction or networking permitted without license from IHS
Not for Resale

(02) **SD-3.1.8** Design of corners and radii should meet the following requirements:

All internal angles of 135 deg or less on product contact surfaces shall have the maximum radius possible for ease of cleanability. Where possible, these surfaces shall have radii of not less than $\frac{1}{8}$ in. (3.2 mm) except where required for functional reasons, such as the bonnet/body connection. For special cases, the radii may be reduced to $\frac{1}{16}$ in. (1.6 mm) when agreed to by the owner/user. When the $\frac{1}{16}$ in. (1.6 mm) radii cannot be achieved for essential functional reasons such as flat sealing surfaces and flow control apertures, the product contact surfaces of these internal angles shall be readily accessible for cleaning and inspection.

(02) SD-3.2 Sterility

SD-3.2.1 While recognizing that there are various methods for equipment sterilization (see SD-2) this Standard will refer only to steam sterilization.

SD-3.2.2 Steam sterilizable equipment parts and components should withstand continuous flow of saturated steam at a minimum temperature of 266°F (130°C) for a duration of 100 hr minimum under continuous steady-state conditions. However, at the discretion of the owner/user, conditions that are more stringent may be imposed. The use of elastomers/fluorelastomers (within a piece of equipment) that may thermally degrade during sterilization will need to be thoroughly investigated by the owner/user or manufacturer. The overall life of the equipment may be shortened significantly if the correct elastomer is not selected.

SD-3.2.3 All product contact surfaces shall reach the required temperatures during the steam sterilization cycle.

SD-3.3 Surface Finishes

(02) **SD-3.3.1** The finishes of product contact surfaces shall be specified by the owner/user in accordance with the definitions of Part SF in this Standard.

(02) **SD-3.3.2** Residual polishing compounds shall be removed after the polishing operations are completed. Refer to SF-1, 3, 5, and 7.

SD-3.3.3 Exterior, non-product contact surfaces are described in SD-3.8.

SD-3.4 Materials of Construction (02)

SD-3.4.1 Materials of construction should be capable of withstanding the temperature, pressure, and chemical corrosiveness assuring the purity and integrity of the product. Generally, materials such as 316, 316L, stainless steels, or higher grade materials (AL6XN, 2205, etc.) have been acceptable. The owner/user should be responsible for the selection of the appropriate materials of construction for the specific process.

SD-3.4.2 When nonmetallic materials are used (e.g., plastics, elastomers, or adhesives), the owner shall specify which one of these materials should carry a certificate of compliance. The conformance of material should be explicitly stated (e.g., conforming to FDA, 21CFR, 177, and USP 24 Class VI).

SD-3.4.3 Materials shall be compatible with the stated bioprocessing conditions, cleaning solutions, and sterilizing conditions, etc., as specified by the owner/user.

SD-3.4.4 Clad or electroplated surface coatings, plating, and surface preparatory chemicals may be used provided approval from the owner/user has been obtained. All surface coatings shall remain intact and be tolerant to the process, SIP and CIP fluids, and temperatures, without peeling or cracking.

Surfaces exposed to bioprocessing fluids, cleaning and sterilizing conditions must be:

(a) homogeneous in nature;
(b) impervious;
(c) inert;
(d) nonabsorbent;
(e) nontoxic;
(f) insoluble by process or cleaning fluids; and
(g) resistant to corrosion, scratching, scoring, and distortion.

SD-3.4.5 Materials that are in contact with bioprocessing fluids shall be identified by an industry recognized standard (see GR-9).

SD-3.4.6 Transparent materials (e.g., glass, borosilicate) that are used in viewing ports should be scratchproof, impervious, inert, and nontoxic and be rated for the applicable pressure and temperature. All glass components shall be homogeneous, not fabricated from one or more layers bonded together.

Copyright ASME International
Provided by IHS under license with ASME
No reproduction or networking permitted without license from IHS
Not for Resale

SD-3.4.7 Internally coated glass shall only be used if the coating complies with FDA or other regulatory authority and approved by the owner/user.

(02) SD-3.5 Fabrication

SD-3.5.1 Fabrication shall be performed in facilities where the product contact surfaces are protected from contamination. During field welding and assembly, surface contamination shall be prevented.

SD-3.5.2 Systems, equipment, and components shall be cleaned with a suitable cleaning agent and covered for protection before shipment. The use of preservative fluids is not recommended.

Any product contact surfaces that require shipment with preservatives or coatings should be:

(a) mutually agreed to, in advance, by the owner/user and manufacturer;

(b) clearly identified to all parties; and

(c) in compliance with FDA or other applicable regulations, as appropriate for the process.

SD-3.5.3 The use of blind welds in piping systems shall be avoided when possible. Proper installation sequencing of the piping system, in most cases, can eliminate most blind welds. See MJ-7.2.3 for further details.

(02) SD-3.6 Static O-Rings, Seals, and Gaskets (See Fig. SD-1)

SD-3.6.1 Static seals (in piping, tubing, and similar fittings) should be designed with O-rings as the sealing elements. O-ring grooves should be shaped in accordance with the O-ring manufacturer recommendation for functionality.

O-ring groves should be designed with cleaning in mind without diminishing their functionality.

SD-3.6.2 Gaskets and O-ring seals generally should be flush with the interior surface of the pipeline or the equipment.

SD-3.6.3 When O-ring seals are used, they shall be set back so the gap between sealing surfaces is as deep as it is wide to ensure flushing of the cavity at ambient temperature.

SD-3.6.4 All O-rings, seals, and gaskets in the product zones shall be compatible with the CIP cleaning media and sterilization media and conditions (e.g., steam-resistant elastomers/fluorelastomers).

SD-3.6.5 O-rings and gaskets shall be self-aligning and self-positioning.

SD-3.7 Connections and Fittings

SD-3.7.1 Design of equipment should minimize the number of connections. Butt welded connections should be used wherever practical. (02)

SD-3.7.2 Hygienic design of connections and fittings implies: (02)

(a) a joint and gasket assembly that will maintain the alignment of the interconnecting fittings; and

(b) a design that ensures pressure on each side of the gasket at the interior surface to avoid product buildup in crevices that might exist in joints otherwise watertight (see Fig. SD-1).

SD-3.7.3 Connections to equipment shall use acceptable hygienic design connections, mutually agreeable to the owner/user and manufacturer.

SD-3.7.4 All connections shall be capable of CIP and SIP. Fittings shall be so designed that there will not be any crevices or hard-to-clean areas around the gasketed joint. ANSI raised face or flat face flanged joints should be avoided where possible (see Fig. SD-2). (02)

SD-3.7.5 Ferrules and ferrule connections should be as short as possible to minimize dead legs. The use of short welding ferrules should be incorporated into the design.

SD-3.7.6 All product contact fittings should be self-draining when properly installed. (02)

SD-3.7.7 Fittings should be selected or designed to minimize deformation of the seals into the product stream due to increased temperature or over-compression. (02)

SD-3.7.8 Threaded fittings, exposed to process fluid, are not recommended [Fig. SD-1(g)]. If screwed fittings are used, an O-ring or gasketed fitting, where the inside diameter (ID) of the O-ring lies flush or has a slight bulge into the ID of the fitting should be used. The construction of the fitting shall be such that excessive deformation of the seal will not be caused as a result of over tightening the nut. (02)

SD-3.7.9 The use of flat gaskets may be acceptable, when agreed to by the owner/user and manufacturer, for applications where it is considered self-sterilizing (i.e., in pure steam distribution systems). (02)

Copyright ASME International
Provided by IHS under license with ASME
No reproduction or networking permitted without license from IHS
Not for Resale

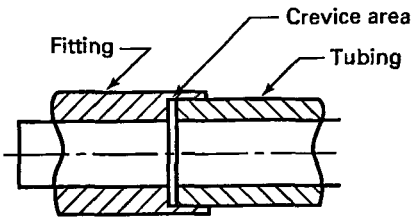

(a) Typical Socket Joint (Not Recommended)

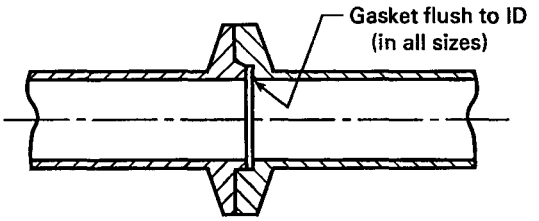

(b) Typical High-Pressure Hygienic Fitting (Recommended)

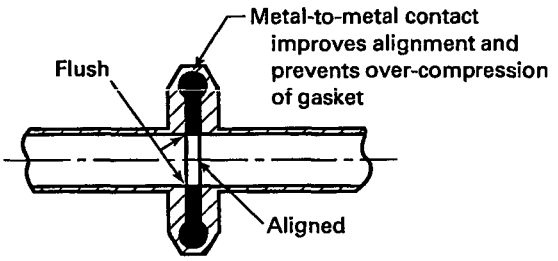

(c) Typical Hygienic Clamp, Below 1 in. Size (Recommended)

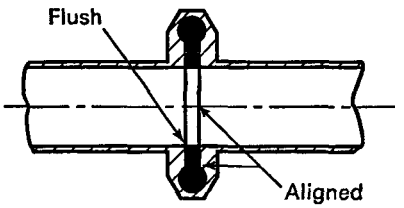

(d) Typical Hygienic Clamp, 1 in. Size and Larger (Recommended)

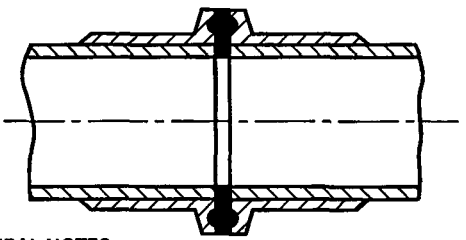

GENERAL NOTES:
(a) Tubing is expanded into the ferrule through use of rollers.
(b) Leakage may occur, especially during temperature cycling.
(c) Product may enter the crevice between ferrule and tubing.

(e) Typical Roll-On Fitting (Not Recommended)

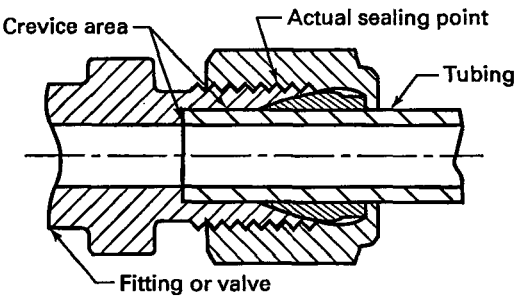

(f) Typical Compression Fitting (Not Recommended)

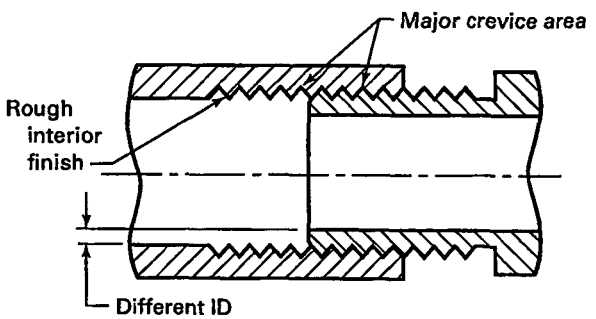

(g) Typical Threaded Joint (Not Recommended)

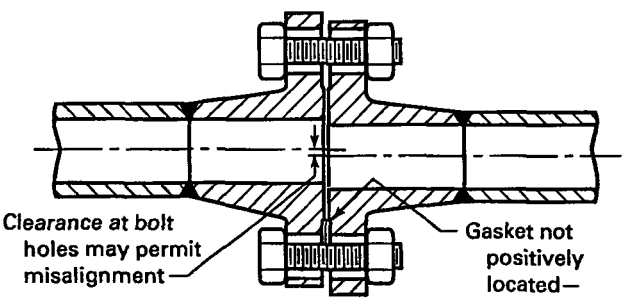

(h) Typical Flanged Joint (Not Recommended)

(02) **FIG. SD-1 HYGIENIC DESIGN CONNECTIONS**

Copyright ASME International
Provided by IHS under license with ASME
No reproduction or networking permitted without license from IHS
Not for Resale

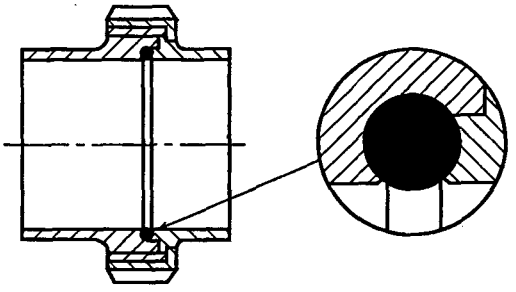

(a) European Hygienic Fitting
(Recommended)

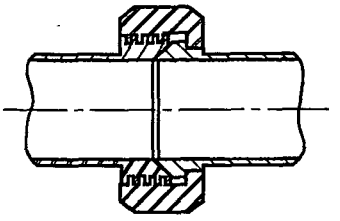

(b) Bevel Seat
(Not Recommended)

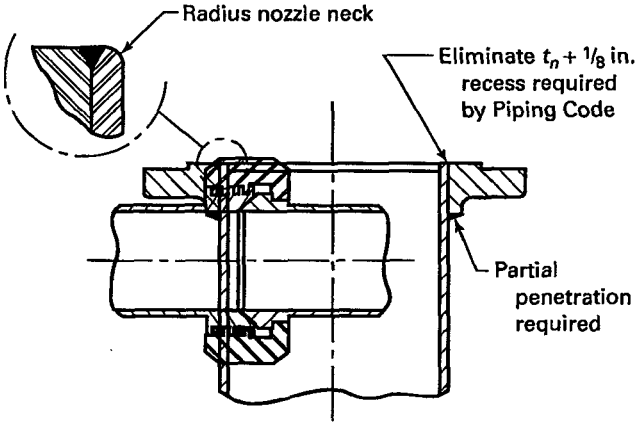

(c) Typical Nozzle Details
Modified Slip-On Flange for Agitators
[Recommended (See Fig. SD-1)]

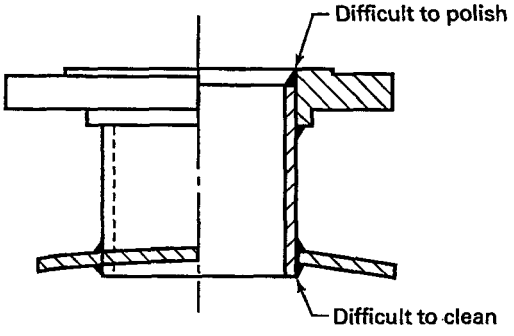

(d) Nozzle Detail
(Not Recommended)

FIG. SD-2 TYPICAL DESIGN OF FITTINGS

(02) SD-3.8 Exterior Design

Equipment located in clean areas is periodically cleaned by wash-down or manually cleaned by wipe-down with harsh cleaning solutions. Such equipment shall conform to the following:

(a) Materials of construction should be corrosion resistant, easily maintained, cleaned, and sanitized without flaking or shedding.

(b) Finishes shall be compatible with the area/room classification as agreed to by the owner/user and manufacturer.

(c) Components shall be capable of being chemically cleaned, steam cleaned, or pressure washed.

(d) All burrs or weld marks shall be removed.

(e) Hinges should be easily removable and/or cleanable.

(f) Equipment mounted on cabinets that are exposed to the environment should be mounted flush.

(g) Skids should have no openings in the frame allowing water retention. Supporting skid frame structures and modules should be constructed from fully sealed tubes or pipes, which are easily cleaned. Frames should have rounded rather than sharp edges.

(h) Motors, gearboxes, and similar equipment should not retain fluids or cleaning solutions on their external surfaces.

(i) Nameplates for tagging equipment should be constructed from corrosion-resistant material such as stainless steel or plastic, and have minimum crevices. The nameplates should be attached and sealed or attached with a corrosion-resistant wire loop.

(j) There should be adequate clearance below or under the equipment for cleaning, and a clearance for discharge should be provided. Elevated equipment under open frames should have a minimum clearance of 6 in. (150 mm) for wash-down and cleaning. In other cases a minimum of 4 in. (100 mm) would be adequate.

Copyright ASME International
Provided by IHS under license with ASME
No reproduction or networking permitted without license from IHS
Not for Resale

(k) Joints and insulation materials shall be sealed and impervious to moisture and cleaning agents.

(l) Electrical cabinets should have a sloped top. Conduit should be polyvinyl chloride (PVC) coated, stainless steel, or easy to clean material. Ventilation panels and ducts should be easily accessible for cleaning.

(m) Painted surfaces should be identified by the fabricator and have the advance approval of the owner/user. All paint systems shall be FDA compliant.

(02) SD-3.9 Containment

The containment level of the system or individual pieces of equipment should be specified by the owner/user.

It will be the responsibility of the owner/user to determine the containment level for the particular type of equipment or system, in accordance with National Institutes of Health (NIH) guidelines and applicable local codes or environmental regulations.

(02) SD-3.10 Miscellaneous Design Details

SD-3.10.1 Grease and other lubricating fluids that are used in gear boxes, drive assemblies, etc., should be contained to prevent leakage of the lubricants or process, either directly or indirectly (e.g., through seepage, seal leaks, etc.).

SD-3.10.2 The equipment manufacturer should specify the type of lubricants that are to be used for maintenance. If the specified lubricant is not accepted by the owner/user, the choice of an alternative should be agreed to by the owner/user and the equipment manufacturer.

SD-3.10.3 The owner/user should give his approval for the lubricants that could come in contact with the product. These lubricants should be identified by name, manufacturer, and grade and shall conform to FDA or other applicable regulatory codes.

(02) SD-3.11 System Design

SD-3.11.1 Dead legs will be measured by the term *L/D*, where *L* is the leg extension from the ID wall normal to the flow pattern or direction, and *D* is the ID of the extension or leg of a tubing fitting or the nominal dimension of a valve or instrument. Tables SD-1, SD-2, SD-3, SD-4, and SD-5 indicate *L/D* values based on the BPE definition for various tubing geometries and configurations. If a branch from a primary pipeline has demonstrated flow during cleaning and sterilization, it does not constitute a dead leg.

For high-purity water and clean steam systems, an *L/D* ratio of 2:1 is attainable with today's manufacturing and design technology. For other bioprocessing systems, such as purification, filtration, and fermentation having cluster, block, and multi-port valves, an *L/D* of 2:1 is achievable. However, it may not be achievable with certain equipment and process configurations as they are currently manufactured. For this part, an *L/D* of 2:1 or less shall be considered a target ratio, and shall not be construed to be an absolute requirement. The system designer and manufacturer shall make every attempt to eliminate system dead legs. It will be the responsibility of the system manufacturer or designer to identify where exceptions exist or where the target ratio of 2:1 cannot be met.

SD-3.11.2 Pipe and tube systems should be drainable or self-draining, and pitched to a draining point. For systems where it may not be feasible to drain to a low point, the system shall be capable of being flushed.

SD-3.11.3 The support systems for tubes and pipes shall maintain the required pitch and alignment under all operating conditions taking into account thermal cycling, contractions, distortion, settling, etc. Pipes and tubes should be pitched in a manner that minimizes the number of low drain points.

SD-3.11.4 Product hold-up volume in the system should be minimized.

SD-3.11.5 Bioprocessing piping and tubing design should have routing and location priority over process and mechanical support systems.

SD-3.11.6 Piping and connections to in-line valves should be of all-welded construction where feasible, practical, and agreed to by the owner/user and manufacturer. To ensure the highest degree of hygienic design, the piping systems should utilize welded connections except where make-break connections are necessary.

SD-3.11.7 The flow balance between the spray devices in a multiple spray arrangement should be maintained to ensure meeting the specified cleaning criteria. Pipe sizes should be specified to guarantee adequate supply and pressure to the spray devices.

Copyright ASME International
Provided by IHS under license with ASME
No reproduction or networking permitted without license from IHS
Not for Resale

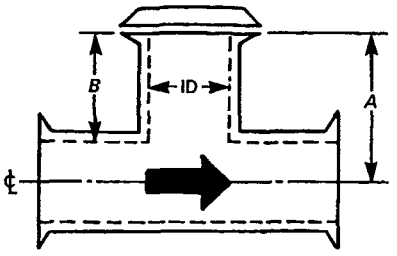

TABLE SD-1 *L/D* DIMENSIONS FOR FLOW-THROUGH TEE: FULL-SIZE STANDARD STRAIGHT TEE WITH BLIND CAP

Nominal Size, in.	Wall Thickness	Centerline, *A*	ID (*D*)	Dead Leg, *B*	*A/D* (CL)	*B/D* (Dead Leg)
1/4	0.035	2.250	0.180	2.16	12.50	12.00
3/8	0.035	2.250	0.305	2.10	7.38	6.88
1/2	0.065	2.250	0.370	2.07	6.08	5.58
3/4	0.065	2.375	0.620	2.07	3.83	3.33
1	0.065	2.625	0.870	2.19	3.02	2.52
1 1/2	0.065	2.825	1.370	2.14	2.06	1.56
2	0.065	3.375	1.870	2.44	1.80	1.30
2 1/2	0.065	3.625	2.370	2.44	1.53	1.03
3	0.065	3.875	2.870	2.44	1.35	0.85
4	0.083	4.750	3.834	2.83	1.24	0.74
6	0.109	7.130	5.782	4.24	1.23	0.73

SD-3.11.8 Pipeline should be fully flooded and ensure turbulent flow during cleaning.

SD-3.11.9 Routing of piping should be as direct and short as possible to ensure a minimal quantity of CIP solution to fill a circuit, and eliminate excessive piping and fittings.

SD-3.11.10 Cross contamination of product streams shall be physically prevented. Methods of separation used in industry are:

(a) removable spool piece;

(b) U-bend transfer panel;

(c) double block-and-bleed valve system (see Fig. SD-5); and

(d) mix-proof valving.

SD-3.11.11 The use of fluid bypass piping (around traps, control valves, etc.) is not recommended.

SD-3.11.12 The use of redundant in-line equipment is not recommended due to the potential creation of dead legs. When equipment is expected to be regularly maintained, the system should be designed for ease of disassembly and reassembly.

SD-3.11.13 The use of check valves for hygienic process piping systems requires caution and is not recommended.

SD-3.11.14 Orifice plates, when required and used in hygienic piping systems, shall be installed in a drainable position.

SD-3.11.15 Eccentric reducers shall be used in horizontal piping to eliminate pockets in the system. See the upper sketch for Table DT-26 for the proper orientation.

SD-3.11.16 The system shall be designed to eliminate air pockets, and prevent or minimize air entrainment.

SD-3.11.17 The centerline radius of bent tubes should be not less than 2.5 times the nominal tube diameter to prevent the deterioration of interior surfaces, (wrinkling, striations, and potential cracking). Tighter bends may be used with the approval of the owner/user when appropriate inspection techniques and procedures (borescope, sectioning, etc.) are used.

Copyright ASME International
Provided by IHS under license with ASME
No reproduction or networking permitted without license from IHS
Not for Resale

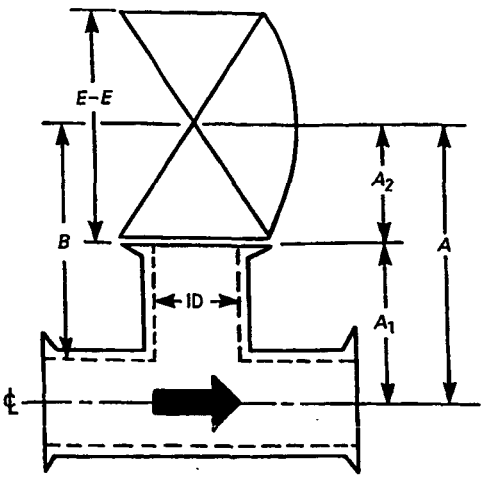

(02) TABLE SD-2 *L/D* DIMENSIONS FOR FLOW-THROUGH TEE: FULL-SIZE STANDARD STRAIGHT TEE WITH DIAPHRAGM VALVE

Nominal Size, in.	Wall Thickness	Valve, *E-E*	Centerline, A_1	A_2	Centerline, *A*	ID (*D*) Branch	Dead Leg, *B*	*A/D* (CL)	*B/D* (Dead Leg)
1/4	0.035	2.53	2.250	1.265	3.515	0.180	3.43	19.53	19.03
3/8	0.035	2.53	2.250	1.265	3.515	0.305	3.36	11.52	11.02
1/2	0.065	3.50	2.250	1.750	4.000	0.370	3.82	10.81	10.31
3/4	0.065	4.00	2.375	2.000	4.375	0.620	4.07	7.06	6.56
1	0.065	4.50	2.625	2.250	4.875	0.870	4.44	5.60	5.10
1 1/2	0.065	5.50	2.825	2.750	5.575	1.370	4.89	4.07	3.57
2	0.065	6.25	3.375	3.125	6.500	1.870	5.57	3.48	2.98
2 1/2	0.065	7.62	3.625	3.810	7.435	2.370	6.25	3.14	2.64
3	0.065	8.75	3.875	4.375	8.250	2.870	6.82	2.87	2.37
4	0.083	11.50	4.750	5.750	10.500	3.834	8.58	2.74	2.24
6	0.109	11.50	7.130	5.750	12.880	5.782	9.99	2.23	1.73

SD-3.11.18 Ball valves are not recommended in fluid hygienic piping systems. See SD-4.11.2(b) for further comments.

SD-3.11.19 Plate and frame type heat exchangers should be used only by agreement between owner and designer due to the difficulty of CIP and SIP.

(02) SD-3.12 Drainability

SD-3.12.1 Using gravity is the most effective way for draining systems. To achieve drainability, lines should be pitched in a specific direction and at a specific slope. The pitch should be continuous from the highest point to the designated drain point. Product lines are generally pitched in the direction of product flow.

Preferred (minimum) piping/tubing slopes are as follows:

(a) Short Runs, Field Installed. 1/4 in./ft (21 mm/m or approximately 2%)

(b) Long Runs, Field Installed. 1/8 in. to 1/16 in./ft (10.4 to 5.2 mm/m or approximately 1 to 0.5%)

(c) Skidded Runs. 1/4 in./ft (21 mm/m or approximately 2%)

(d) Transfer Panels. 1/4 in. or 1/16 in./ft (21 to 5.2 mm/m or approximately 2 to 0.5%).

SD-3.12.2 Piping and equipment should be installed with designated drain points to maximize self-draining properties. The number of drain points should be minimized. The equipment manufacturer shall indicate the proper orientation to optimize drainability. The installer and user shall ensure that proper orientation is achieved.

Copyright ASME International
Provided by IHS under license with ASME
No reproduction or networking permitted without license from IHS
Not for Resale

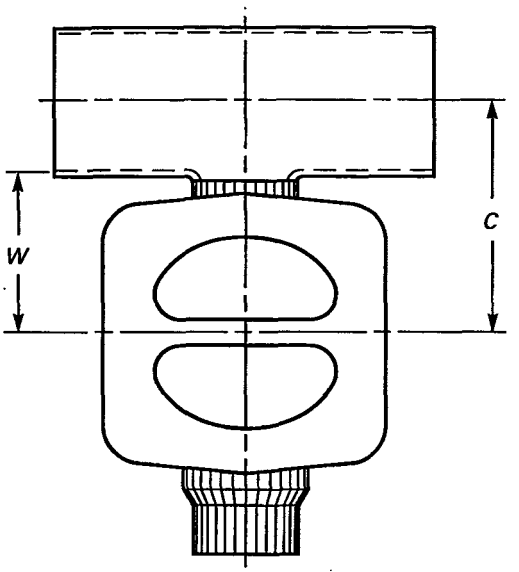

TABLE SD-3 TYPE A *C/D* RATIO (TUBE CENTER TO WEIR CENTER) AND *W/D* RATIO (TUBE WALL ID TO WEIR CENTER) (02)

	Type A *C/D* Ratio (Tube Center to Weir Center)								
	Cross Tube Diameter								
Valve Size	**0.50**	**0.75**	**1.00**	**1.50**	**2.00**	**2.50**	**3.00**	**4.00**	**6.00**
< 0.50	2.30	2.62	2.87	3.40	3.90	4.40	4.90	5.90	7.90
0.50	2.78	3.10	3.36	3.88	4.38	4.88	5.38	6.38	8.38
0.75	...	2.29	2.45	2.79	3.12	3.45	3.79	4.45	5.79
1.00	...	...	2.06	2.31	2.56	2.81	3.06	3.56	4.56
1.50	...	...	...	1.93	2.10	2.27	2.43	2.77	3.43
2.00	...	...	...	...	1.74	1.86	1.99	2.24	2.74
2.50	...	...	...	...	...	1.92	2.02	2.22	2.62
3.00	...	...	...	...	...	...	1.83	2.00	2.33
4.00	...	...	...	...	...	...	...	1.86	2.11

	Type A *W/D* Ratio (Tube Wall ID to Weir Center)								
	Cross Tube Diameter								
Valve Size	**0.50**	**0.75**	**1.00**	**1.50**	**2.00**	**2.50**	**3.00**	**4.00**	**6.00**
< 0.50	1.93	2.00	2.00	2.03	2.03	2.03	2.03	2.07	2.12
0.50	2.41	2.48	2.49	2.51	2.51	2.51	2.51	2.55	2.60
0.75	...	1.88	1.87	1.88	1.87	1.87	1.88	1.89	1.94
1.00	...	...	1.63	1.63	1.63	1.63	1.63	1.64	1.67
1.50	...	...	...	1.47	1.48	1.48	1.47	1.49	1.50
2.00	...	...	...	...	1.27	1.27	1.27	1.28	1.29
2.50	...	...	...	...	...	1.45	1.45	1.45	1.46
3.00	...	...	...	...	...	...	1.35	1.36	1.37
4.00	...	...	...	...	...	...	...	1.38	1.39

GENERAL NOTE: All dimensions and ratios in above charts are derived from a single manufacturer. Dimensions and ratios for other valve manufacturers may differ.

Copyright ASME International
Provided by IHS under license with ASME
No reproduction or networking permitted without license from IHS
Not for Resale

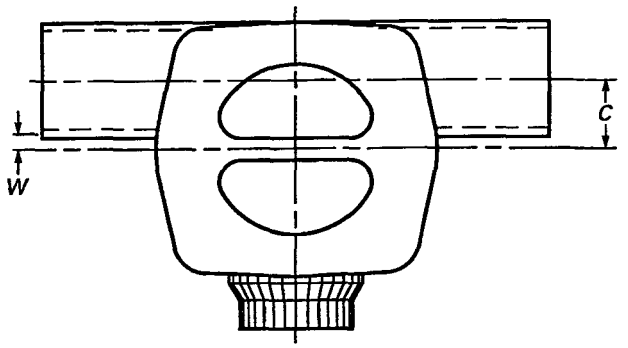

(02) **TABLE SD-4 TYPE B *C/D* RATIO (TUBE CENTER TO WEIR CENTER) AND *W/D* RATIO (TUBE WALL ID TO WEIR CENTER)**

Valve Size	Type B *C/D* Ratio (Tube Center to Weir Center) Cross Tube Diameter					
	0.50	0.75	1.00	1.50	2.00	3.00
< 0.50	0.61	0.89	...	...	...	...
0.50	0.67	0.92	0.77	0.92	0.82	1.16
0.75	...	0.61	0.77	0.92	0.82	1.16
1.00	...	...	0.66	0.92	0.82	1.16
1.50	...	...	...	0.65	0.82	1.16
2.00	...	...	...	...	0.59	0.85

Valve Size	Type B *W/D* Ratio (Tube Wall ID to Weir Center) Cross Tube Diameter					
	0.50	0.75	1.00	1.50	2.00	3.00
< 0.50	0.24	0.27	...	...	...	...
0.50	0.30	0.30	0.19	0.24	0.20	0.20
0.75	...	0.20	0.19	0.24	0.20	0.20
1.00	...	...	0.23	0.24	0.20	0.20
1.50	...	...	...	0.19	0.20	0.20
2.00	...	...	...	...	0.12	0.13

GENERAL NOTE: All dimensions and ratios in above charts are derived from a single manufacturer. Dimensions and ratios for other valve manufacturers may differ.

SD-3.12.3 Long runs (as defined by the owner/end user and manufacturer) for supply and return CIP lines should be pitched away from the spray device, and back toward the CIP supply point at not less than $\frac{1}{16}$ in./ft (5 mm/m or approximately 0.5%).

SD-3.12.4 Lines connected to pumps should have a continuous pitch toward the pump.

SD-3.12.5 Systems or equipment that are not self-draining should be flushable (see Fig. SD-6).

SD-4 SPECIFIC GUIDELINES

SD-4.1 Instrumentation (02)

SD-4.1.1 General

(a) Liquid filled elements in measuring devices should not contain materials that are harmful to the product.

(b) Gage siphons (pigtails) should not be used. The number of isolation valves should be minimized.

(c) All instruments, valves, and in-line devices where appropriate should be permanently marked for proper installation (e.g., flow direction, orientation, etc.).

(d) Measurement elements should be designed in a way that a failure will not cause contamination hazards to the process and environment.

(e) The internal volume of the instrument's sensing element should be minimized.

(f) Instruments should have integral hygienic fittings. Threaded ferrules are not acceptable to convert standard instrumentation to hygienic standards.

SD-4.1.2 Relief Devices

(a) Rupture discs on pressure vessels should be installed as close as possible to the system's highest point.

(b) The cleaning system design shall ensure that the rupture disc will not be damaged by cleaning media impact.

(c) Rupture disc installation should comply with the *L/D* ratios mentioned in SD-3.11.1.

(d) Discharge piping should comply with the appropriate code.

SD-4.1.3 Liquid Pressure Regulators

(a) Regulators should be installed to be fully drainable through the outlet and/or inlet ports.

(b) There shall be no voids or crevices within the area wetted by the fluid. Regulator designs, where a portion of the valve stem penetrates the sensing diaphragm, shall be avoided unless provisions are made to avoid entrapment of foreign matter and any leakage through the interface between stem and diaphragm, especially after steam sterilization.

(c) Due to the inherent design characteristics of self-contained regulators, manual means of override may be required to allow full cleanability and drainability.

Copyright ASME International
Provided by IHS under license with ASME
No reproduction or networking permitted without license from IHS
Not for Resale

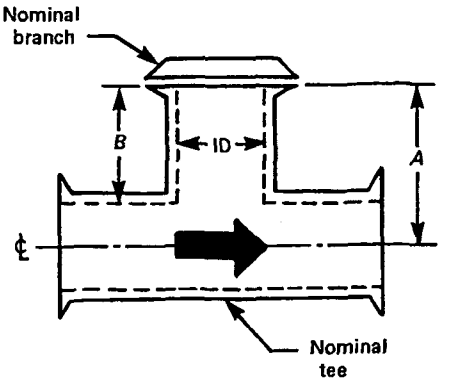

TABLE SD-5 *L/D* DIMENSIONS FOR FLOW-THROUGH TEE: SHORT OUTLET REDUCING TEE WITH BLIND CAP (02)

Nominal Size Tee, in.	Nominal Branch Size, in.	Tee Wall Thickness	Branch Wall Thickness	Centerline, *A*	Branch ID (*D*)	Dead Leg, *B*	*A/D* (CL)	*B/D* (Dead Leg)
3/8	1/4	0.035	0.035	1.000	0.180	0.85	5.56	4.71
1/2	1/4	0.065	0.035	1.000	0.180	0.82	5.56	4.53
1/2	3/8	0.065	0.035	1.000	0.305	0.82	3.28	2.67
3/4	1/4	0.065	0.035	1.000	0.180	0.69	5.56	3.83
3/4	3/8	0.065	0.035	1.000	0.305	0.69	3.28	2.26
3/4	1/2	0.065	0.065	1.000	0.370	0.69	2.70	1.86
1	1/4	0.065	0.035	1.125	0.180	0.69	6.25	3.83
1	3/8	0.065	0.035	1.125	0.305	0.69	3.69	2.26
1	1/2	0.065	0.065	1.125	0.370	0.69	3.04	1.86
1	3/4	0.065	0.065	1.125	0.620	0.69	1.81	1.11
1 1/2	1/4	0.065	0.035	1.375	0.180	0.69	7.64	3.83
1 1/2	3/8	0.065	0.035	1.375	0.305	0.69	4.51	2.26
1 1/2	1/2	0.065	0.065	1.375	0.370	0.69	3.72	1.88
1 1/2	3/4	0.065	0.065	1.375	0.620	0.69	2.22	1.11
1 1/2	1	0.065	0.065	1.375	0.870	0.69	1.58	0.79
2	1/4	0.065	0.035	1.625	0.180	0.69	9.03	3.83
2	3/8	0.065	0.035	1.625	0.305	0.69	5.33	2.26
2	1/2	0.065	0.065	1.625	0.370	0.69	4.39	1.86
2	3/4	0.065	0.065	1.625	0.620	0.69	2.62	1.11
2	1	0.065	0.065	1.625	0.870	0.69	1.87	0.79
2	1 1/2	0.065	0.065	1.625	1.370	0.69	1.19	0.50
2 1/2	1/4	0.065	0.035	1.875	0.180	0.69	10.42	3.83
2 1/2	3/8	0.065	0.035	1.875	0.305	0.69	6.15	2.26
2 1/2	1/2	0.065	0.065	1.875	0.370	0.69	5.07	1.86
2 1/2	3/4	0.065	0.065	1.875	0.620	0.69	3.02	1.11
2 1/2	1	0.065	0.065	1.875	0.870	0.69	2.16	0.79
2 1/2	1 1/2	0.065	0.065	1.875	1.370	0.69	1.37	0.50
2 1/2	2	0.065	0.065	1.875	1.870	0.69	1.00	0.37
3	1/4	0.065	0.035	2.125	0.180	0.69	11.81	3.83
3	3/8	0.065	0.035	2.125	0.305	0.69	6.97	2.26
3	1/2	0.065	0.065	2.125	0.370	0.69	5.74	1.86
3	3/4	0.065	0.065	2.125	0.620	0.69	3.43	1.11
3	1	0.065	0.065	2.125	0.870	0.69	2.44	0.79

(continued)

Copyright ASME International
Provided by IHS under license with ASME
No reproduction or networking permitted without license from IHS
Not for Resale

(02) **TABLE SD-5 *L/D* DIMENSIONS FOR FLOW-THROUGH TEE: SHORT OUTLET REDUCING TEE WITH BLIND CAP (CONT'D)**

Nominal Size Tee, in.	Nominal Branch Size, in.	Tee Wall Thickness	Branch Wall Thickness	Centerline, *A*	Branch ID (*D*)	Dead Leg, *B*	*A/D* (CL)	*B/D* (Dead Leg)
3	1½	0.065	0.065	2.125	1.370	0.69	1.55	0.50
3	2	0.065	0.065	2.125	1.870	0.69	1.14	0.37
3	2½	0.065	0.065	2.125	2.370	0.69	0.90	0.29
4	¼	0.083	0.035	2.625	0.180	0.71	14.58	3.93
4	⅜	0.083	0.035	2.625	0.305	0.71	8.61	2.32
4	½	0.083	0.065	2.625	0.370	0.71	7.09	1.91
4	¾	0.083	0.065	2.625	0.620	0.71	4.23	1.14
4	1	0.083	0.065	2.625	0.870	0.71	3.02	0.81
4	1½	0.083	0.065	2.625	1.370	0.71	1.92	0.52
4	2	0.083	0.065	2.625	1.870	0.71	1.40	0.38
4	2½	0.083	0.065	2.625	2.370	0.71	1.11	0.30
4	3	0.083	0.065	2.625	2.870	0.71	0.91	0.25
6	¼	0.109	0.035	3.750	0.180	0.86	20.83	4.77
6	⅜	0.109	0.035	3.750	0.305	0.86	12.30	2.82
6	½	0.109	0.065	3.750	0.370	0.86	10.14	2.32
6	¾	0.109	0.065	3.750	0.620	0.86	6.05	1.39
6	1	0.109	0.065	3.750	0.870	0.86	4.31	0.99
6	1½	0.109	0.065	3.750	1.370	0.86	2.74	0.63
6	2	0.109	0.065	3.750	1.870	0.86	2.01	0.46
6	2½	0.109	0.065	3.750	2.370	0.86	1.58	0.36
6	3	0.109	0.065	3.750	2.870	0.86	1.31	0.30
6	4	0.109	0.083	3.750	3.834	0.86	0.98	0.22

SD-4.2 Specialty Hoses

(02) **SD-4.2.1** Flexible hygienic hoses should typically be designed so that there are no low points or sagging of the hoses. It is preferable to slope the lines at 30 deg or 45 deg to prevent sagging problems, especially if the hoses are connected to a piece of equipment on load cells (see Fig. SD-7).

SD-4.2.2 Flexible hose fitting ID shall match the ID of the mating fitting. The ID of flexible hoses should be a smooth bore design.

(02) SD-4.3 Centrifuges

SD-4.3.1 General

(a) Centrifuges designed for CIP and SIP should have all product contact surfaces accessible to the CIP and SIP fluids, and be accessible for inspection.

(b) Centrifuges that are not designed for CIP or SIP should be easily disassembled and reassembled for cleaning and inspection.

(c) The owner/user should inform the manufacturer of the fluids and methods to be used for cleaning and sterilizing (e.g., sterilized by autoclaving).

(d) All crevices and corners, etc., should be accessible for visual inspection and cleaning.

(e) Hexagon socket head cap screws shall not be used if they are in contact with the product.

(f) No exposed lubricated bearings shall be allowed in product contact zones.

(g) The centrifuge manufacturer should minimize all unwanted areas where solids may accumulate. These should include threads, gaps between parts, crevices, etc. The centrifuge manufacturer should identify all areas of primary and incidental product contact that require manual cleaning in addition to CIP.

SD-4.3.2 Internal Surface Finishes (Process Contact/Wetted Surfaces)

(a) Surface finish specifications should comply with Parts SF and MJ of this Standard.

(b) The owner/user and manufacturer should agree on the required finishes for the various parts. The surface finish of machined components or parts should be specified by the manufacturer and agreed upon by the owner/user.

(c) Provisions should be made for inspection prior to assembly into larger assemblies of subcomponents

Copyright ASME International
Provided by IHS under license with ASME
No reproduction or networking permitted without license from IHS
Not for Resale

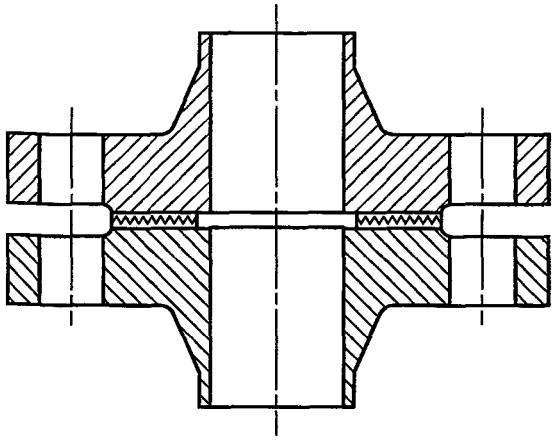

(a) Not Recommended

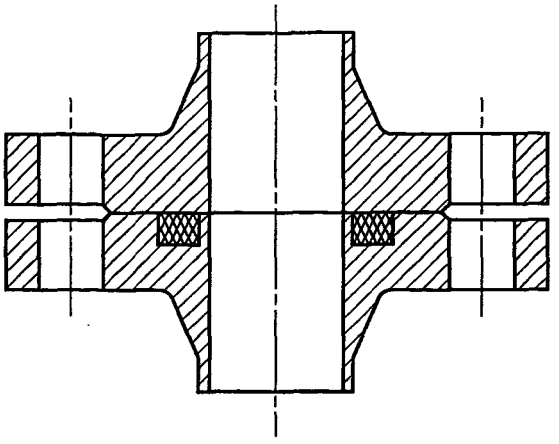

(b) Not Recommended
(Has Been Acceptable in Certain Applications)

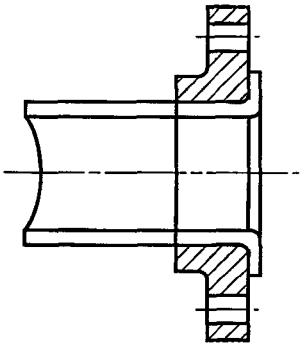

(c) Stub-End/Lap Joint
(Not Recommended)

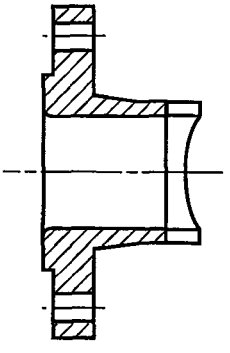

(d) Weld Neck
(Not Recommended)

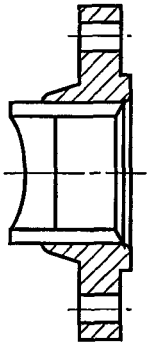

(e) Slip On
(Not Recommended)

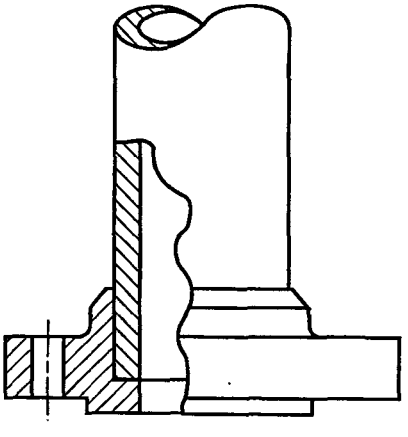

(f) Socket Welding Flanges
(Not Recommended)

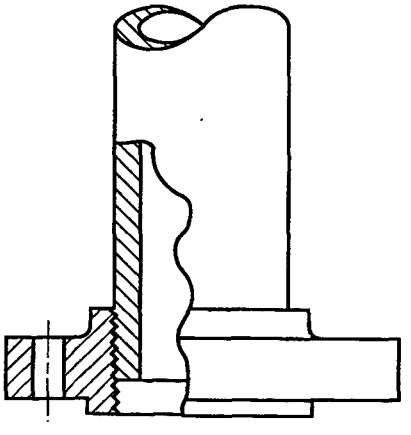

(g) Threaded Flanges
(Not Recommended)

FIG. SD-3 FLAT GASKET APPLICATIONS (02)

Copyright ASME International
Provided by IHS under license with ASME
No reproduction or networking permitted without license from IHS
Not for Resale

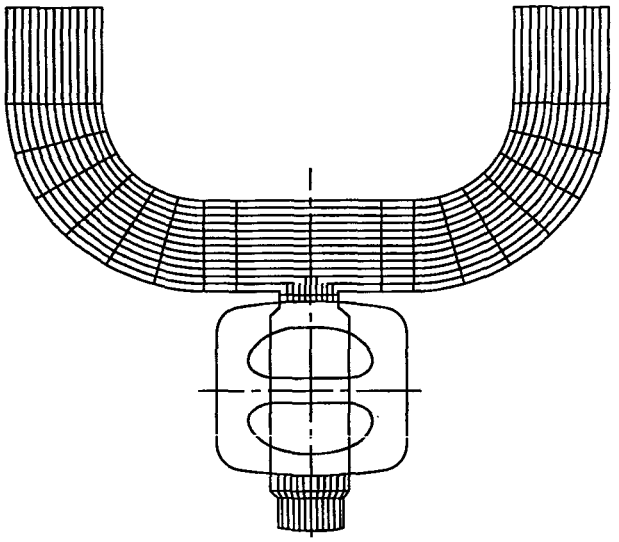

(a) Recommended
(with 2.0 Target *L/D*)

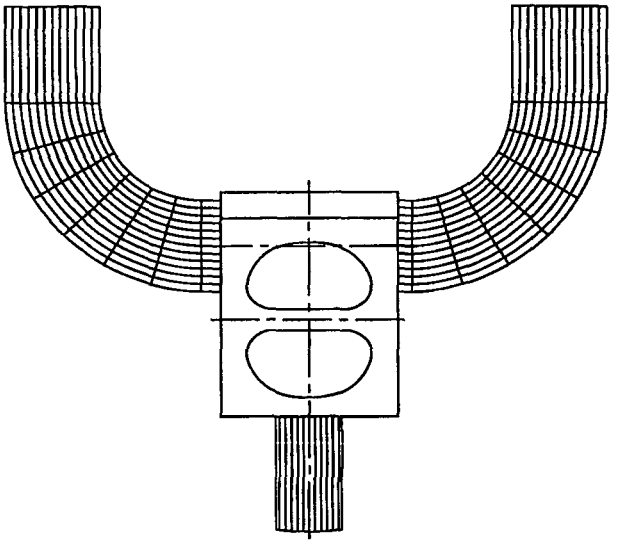

(b) Preferred

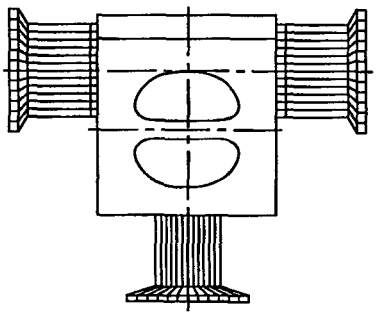

(c) Preferred

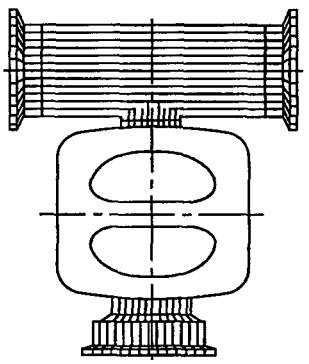

(d) Recommended

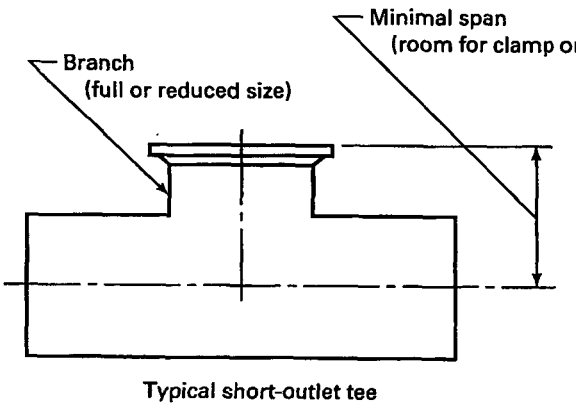

Typical short-outlet tee

(e) Recommended

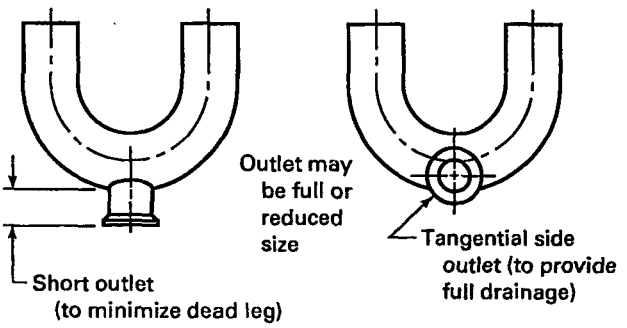

(f) Recommended (g) Preferred

(02) **FIG. SD-4 RECOMMENDED AND PREFERRED DROP DESIGNS**

Copyright ASME International
Provided by IHS under license with ASME
No reproduction or networking permitted without license from IHS
Not for Resale

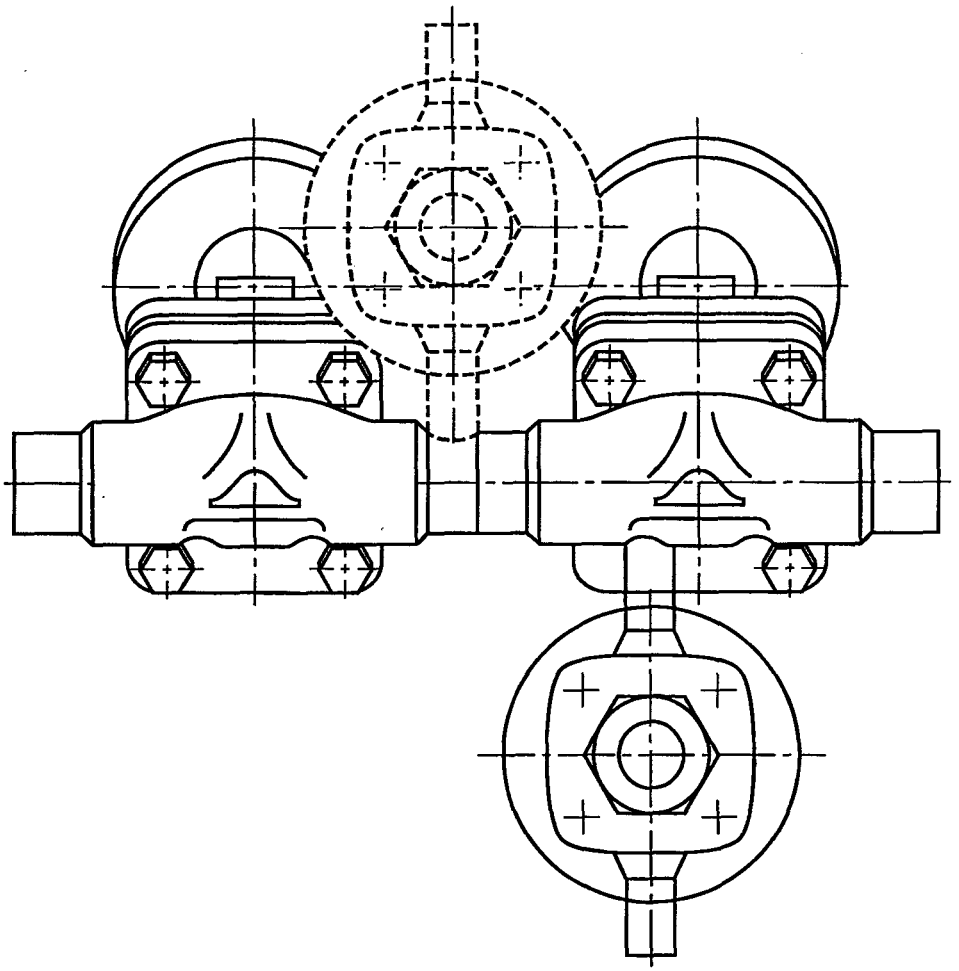

FIG. SD-5 DOUBLE BLOCK-AND-BLEED VALVE ASSEMBLY

and parts. Provisions shall be made to enhance the cleanability of the machined surface by use of sloping, draining, electropolishing of surface, or other means.

(02) SD-4.4 Filtration Equipment

(a) All wetted surfaces should be accessible for cleaning and inspection.

(b) The filter housing shall be designed to allow for complete venting and draining. Liquid tee-type filter housings should be installed vertically and vent type in-line filter housings should be installed vertically with the condensate/drain port directed downward (see Fig. SD-8).

(c) All nozzle connections should be of a hygienic design.

(d) Baffle plates, when used should be cleanable and sterilizable.

(e) The housing assembly, tube-sheets, end plates, and connections should be designed to prevent bypassing of the product around the element.

(f) Parts forming internal crevices should be easily disassembled to enable access for cleaning.

(g) Vent filters for hot process services should be heat traced or steam jacketed. Other methods for preventing moisture accumulation in vent filters, such as vent heaters or condensers, could be considered.

SD-4.5 Pumps (02)

SD-4.5.1 General

(a) Pumps shall be capable of being cleaned in place (CIP).

(b) Provision shall also be made in the design to allow for clean out of place (COP) when required.

(c) Pumps shall be capable of being sterilized in

Copyright ASME International
Provided by IHS under license with ASME
No reproduction or networking permitted without license from IHS
Not for Resale

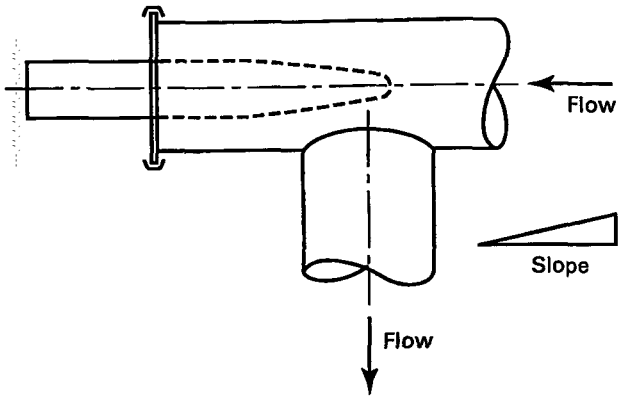

(a) Not Recommended

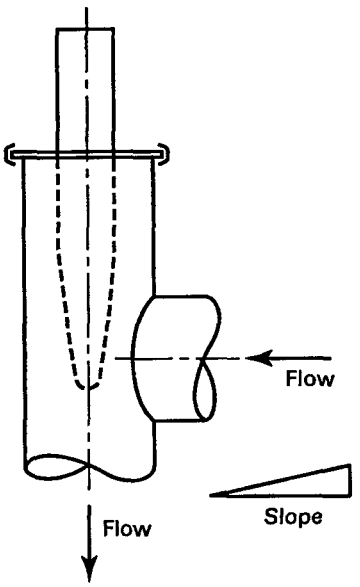

(b) Recommended

FIG. SD-6 INSTRUMENT LOCATION DETAIL: HYGIENIC DESIGN

place (SIP) when agreed to between owner/end user and manufacturer.

SD-4.5.2 Hygienic Centrifugal Pumps

(a) Suction, discharge, and casing drain connections should be an integral part of the pump casing. Welded inserts should be back-welded.

(b) All connections to the pump, including mechanical seal recirculation flush, drains, vents, and process connections shall be of an acceptable hygienic design.

(c) Casing drains shall be at the lowest point of the casing, to ensure full drainage.

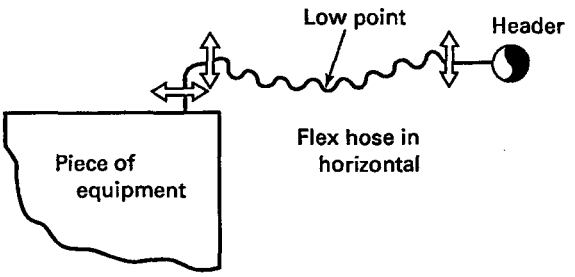

(a) Not Recommended

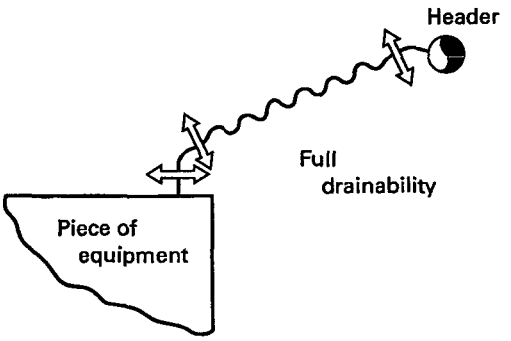

(b) Recommended

FIG. SD-7 FLEXIBLE HYGIENIC HOSE DESIGN

They should be both horizontal and parallel to the pump centerline or perpendicular to the casing's tangent at a predetermined downward angle.

(d) The use of an elbow type casing drain is not recommended. When possible, the casing drain connection should project a minimum distance, approaching the target *L/D* ratio of 2:1.

(e) Diaphragm valves are preferred for casing drains.

(f) Pump discharge connection should be tilted at 45 deg or the appropriate angle, where practical, to allow for full venting of the casing, when agreed to by the owner/user.

(g) Impeller drive pins, set screws, rotor pins, etc., shall be designed to minimize crevices, holes, etc., on product contact surfaces, where practical.

(h) Pump casings shall be designed with minimum hold-up volume.

(i) All pump seals shall be designed to prevent contamination of the process fluid, consistent with the process requirements of that fluid.

(j) Shrouded impellers should not be used unless approved by all parties, since they cannot be cleaned in place.

Copyright ASME International
Provided by IHS under license with ASME
No reproduction or networking permitted without license from IHS
Not for Resale

SD-4.5.3 Hygienic Positive Displacement Pumps

(a) When possible, positive displacement pumps should be configured with vertically mounted inlets and outlets to promote drainability and venting.

(b) When using internal bypass pressure relief devices, they should be of a hygienic design. It is preferred that an external, piping mounted relief device (hygienic rupture disc) rather than a pump mounted bypass be used.

SD-4.6 Process (Hygienic) Valves

(02) SD-4.6.1 General: Valves

(a) Process flow valves (e.g., diaphragm valves) should be of a body and port design so that the body will optimize drainability when properly installed. All hygienic valves should be welded into the process line.

(b) Valve surfaces that may become product contact surfaces if a component (e.g., diaphragm) fails in service shall be readily accessible for inspection, maintenance, and cleaning.

(c) Tee-body and cross-body sanitary valves shall be positioned to ensure that the valve body will optimize drainability when installed in a piping system.

(d) Isolation and block valves, which are located on bosses or tees, should be installed close-coupled to reduce or eliminate dead legs. (When the stem of a three-port valve moves from one position to the other such that all ports are connected for a brief period of time, this will cause mixing at first and then a resultant dead-end in the previous path while the current path is in use.) If this is not acceptable, two shut-off valves may be used instead.

(e) Multiport divert valves shall be installed to optimize drainability.

(f) The internal volume of the valve should be kept to a minimum.

(g) All cavities shall be easily accessible for cleaning by CIP fluids and SIP steam, and shall be designed to optimize drainability.

(h) Any crevices, void volumes, and/or gaps between mating parts should be minimized.

(i) Any guiding of valve trim and operating mechanisms shall be minimized in areas in contact with bioprocessing fluids.

(j) All valves shall be capable of being fully opened or exposed during CIP.

(k) A secondary stem seal should be fitted with a telltale connection between the primary and secondary stem seal to indicate primary seal leakage.

SD-4.6.2 Diaphragm Valves (02)

(a) Diaphragm-type valves are specifically preferred for bioprocessing fluid applications.

(b) Valves will be designed so that complete drainage of fluid from inlet to outlet is optimized when mounted in the position specified by the manufacturer. Drain marks permanently marked on both sides of the valve body will show the correct mounting position to optimize drainability.

(c) Valve design will eliminate entrapment zones within the valve fluid cavity.

SD-4.6.3 Stem Seal Valves. Valve seals should comply with Part SG of this Standard. (02)

SD-4.7 Vessels, Tanks, Bioreactors, Fermenters, and Columns (02)

SD-4.7.1 General

(a) This section defines the minimum requirements that are to be met in the design, fabrication, and supply of biopharmaceutical vessels, tanks, bioreactors, fermenters, and columns. This section will refer to all of the above as vessels whether they are pressurized or not.

(b) Design and fabrication of vessels and internal parts shall ensure that surfaces are free of ledges, crevices, pockets, and other surface irregularities. If more restrictive tolerances are required, they shall be included as part of the fabrication specifications for the project.

(c) All heat transfer surfaces should be drainable and ventable.

(d) Breastplates, reinforcing pads, doubler plates, poison pads, etc., which are required for welding dissimilar material to the vessel should be of the same material as the vessel. No telltale holes are allowed on product contact surfaces and those, which are outside, should be cleanable.

(e) Vessels that are to handle above 1760°F (800°C) (e.g., SIP, hot Water-for-Injection [WFI], hot US Pharmacopoeia [USP] waters, or CIP processes with hot [176°F (≥80°C)]) should be designed for full vacuum service.

(f) Top and bottom heads on vessels should be free-draining. Dished heads such as ASME flanged and dished (F&D), elliptical, and hemispherical are the usual choice; however, flat and conical heads should slope at not less than $\frac{1}{8}$ in./ft (20 mm/m) to a common drain point.

(g) All internal surfaces should be sloped or pitched for drainability.

Copyright ASME International
Provided by IHS under license with ASME
No reproduction or networking permitted without license from IHS
Not for Resale

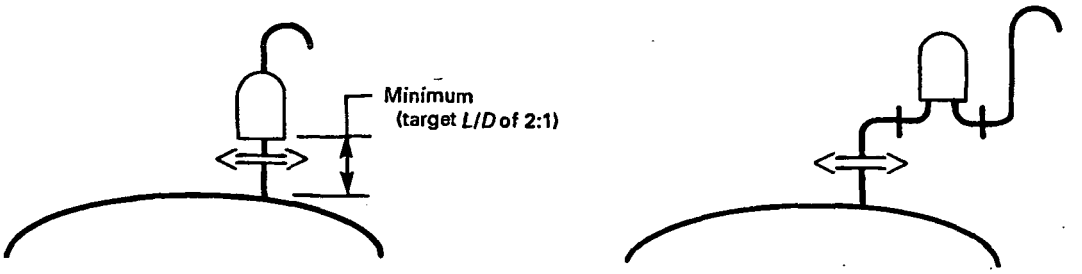

(a) In-Line Hygienic Design
(Preferred)

(b) T-Type Less Hygienic Design
(Recommended)

FIG. SD-8 TANK/VESSEL VENT FILTERS

(h) Test protocols for drainability should be agreed upon in advance, by all the parties (see SD-5.4). All vessels should be checked for drainability during fabrication.

SD-4.7.2 Vessel Openings

(a) Nozzles that are designed to be cleaned by a spray device should have the smallest *L/D* ratio possible. For non-flow through nozzles, the *L/D* ratio should not exceed 2:1 (see Fig. SD-9).

(b) Bottom mounted agitators, pads, etc., should not interfere with the drainability of the vessel.

(c) All instrument probes and any side wall penetrations shall be sloped for drainage, unless the instruments used require horizontal mounting (see Fig. SD-10).

(d) Blank covers should have the same finish as the vessel internals.

(e) Drain valves should optimize drainability and minimize dead legs.

(f) All CIP devices should be drainable and self-cleaning.

(g) The location and number of spray devices should be chosen to eliminate shadowing at internal parts such as mixer shafts, dip tubes, and baffles.

(h) Sparger and dip tubes should have an adequate number of drainage holes to ensure full drainage.

(i) The number of shell side nozzles and connections should be minimized.

(j) Manways on the side shell of a vessel shall be installed only by agreement of the owner/user. If side shell manways are required, they should be sloped for drainage.

(k) Sample valves should be designed for CIP and SIP. Sample valves, located on vessels shall be of a hygienic design, either flush with the inside wall of the vessel or with a TARGET *L/D* ratio of 2:1.

(l) Sample valves should not be located on bottom heads.

(m) Nozzles with a dip tube mounted in a nozzle neck should have a minimum annular space of 1 in. (25 mm) with a TARGET *L/A* ratio of 2:1. In all cases sufficient annular space to allow access for CIP coverage (see Fig. SD-11) shall be provided.

(n) As required by the process, inlet nozzles tangential to the vessel surface may be used (see Fig. SD-12).

(o) Nozzle connections less than 1 in. (25 mm) in diameter are not recommended unless agreed by the owner/user and manufacturer.

(p) Sight glasses should be located on the vessel head within 80% of the vessel dish radius, to avoid the knuckle radius. It is not recommended to mount the sight glasses on the vessel manways due to the potential problems with access for CIP (see Fig. SD-13). Sight glasses on vessels should be designed with the smallest *L/D* ratio possible, and incorporate cleanable O-ring designs when applicable (see Fig. SD-16).

(q) Sparger and dip tubes should be designed in accordance with SD-4.7.1, incorporate a low point drain hole, and be supported to maintain drainability (see Fig. SD-15).

(r) Manway covers should be dished rather than a flat design.

(s) Flanges that have metal-to-metal contact on the product side are difficult to CIP and SIP. These flanges should be eliminated, if possible. See Fig. SD-15 for possible designs that minimize the crevice on the internal sidewall of the vessel.

(t) All side-shell and vessel head nozzles should be flush with the interior of the vessel. (See Fig. SD-19.) Additional ports may require a minimum projection to ensure additives are directed into the vessel fluid.

Copyright ASME International
Provided by IHS under license with ASME
No reproduction or networking permitted without license from IHS
Not for Resale

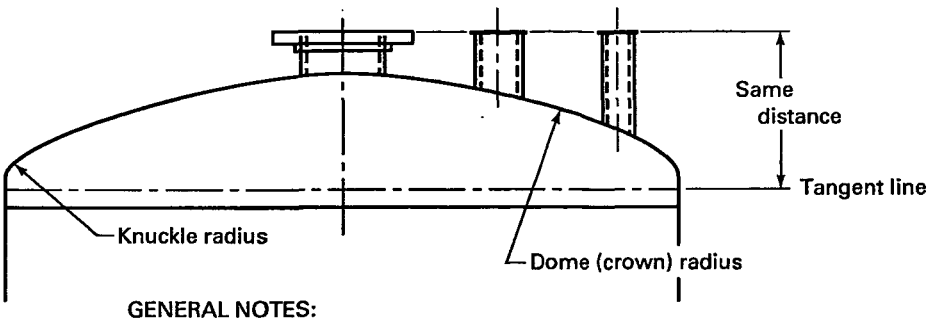

GENERAL NOTES:
(a) Small diameter nozzle necks hard to polish
(b) $L/D > 6$, problems with CIP and SIP
(c) Dead space: stagnant areas

(a) Not Recommended

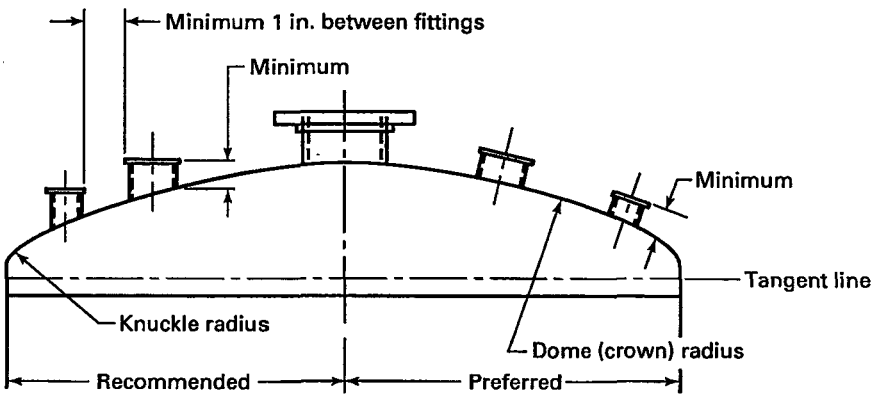

GENERAL NOTES:
(a) Easier to polish
(b) Less dead space
(c) Better flow-through characteristics
(d) Better CIP/SIP capabilities

(b) Allow for Clamps/Bolt-Up
(Target L/D of 2:1)

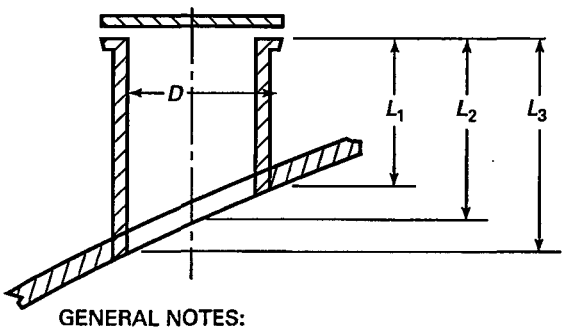

GENERAL NOTES:
(a) All L/D ratios to be calculated on long-side dimensions for vessel heads
(b) D = inside diameter

(c) $L/D = L_3/D$ (target 2:1)

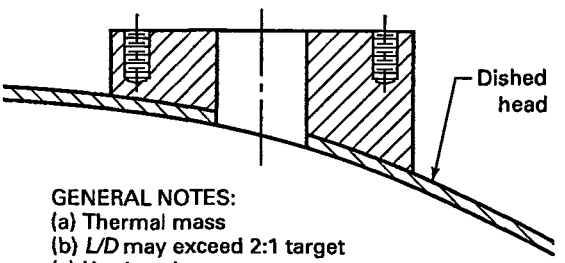

GENERAL NOTES:
(a) Thermal mass
(b) L/D may exceed 2:1 target
(c) Hard to clean
(d) Sharp edge at internal corner
(e) Possible crack site at internal corner

(d) Instrument Connection Vessel
(Not Recommended)

FIG. SD-9 NOZZLE DESIGN

Copyright ASME International
Provided by IHS under license with ASME
No reproduction or networking permitted without license from IHS
Not for Resale

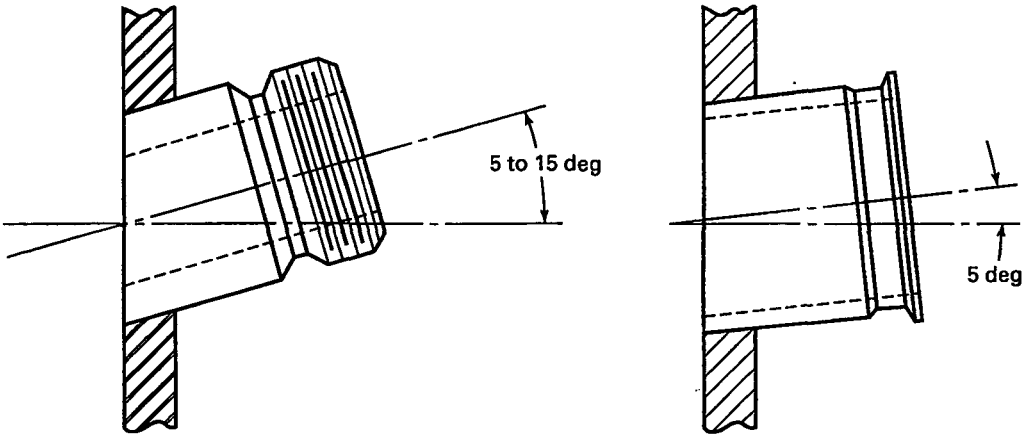

(a) Recommended (b) Recommended

FIG. SD-10 SIDEWALL INSTRUMENT PORTS

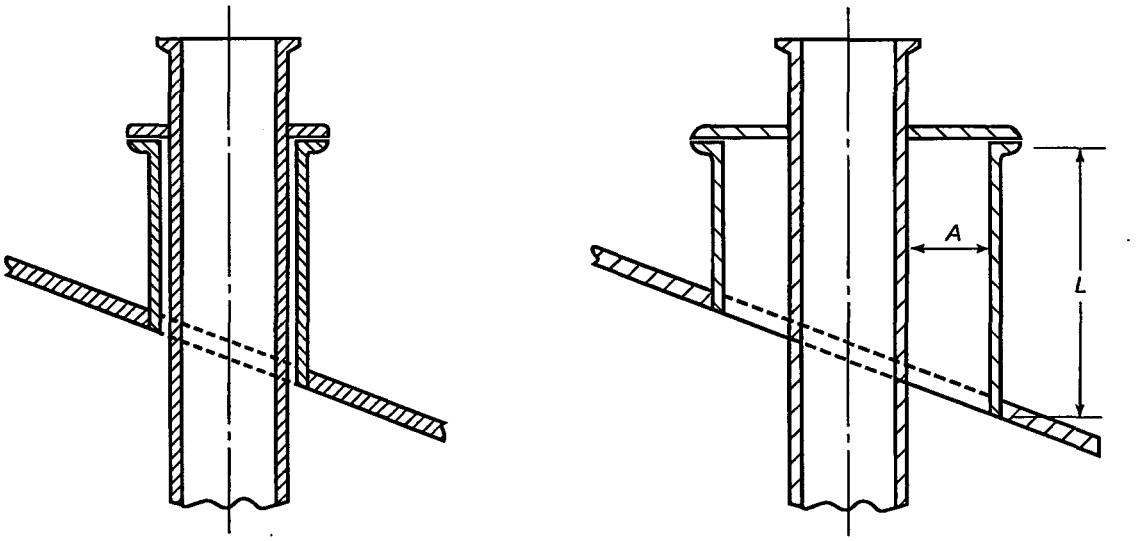

GENERAL NOTES:
(a) Small diameter nozzle necks hard to polish
(b) *L/D* > 6, problems with CIP and SIP
(c) Dead space: stagnant areas

(a) Not Recommended

GENERAL NOTES:
(a) Easier to polish
(b) Less dead space
(c) Better flow-through characteristics
(d) Better CIP/SIP capabilities
(e) *L/D* target of 2:1 more easily obtained

(b) Acceptable: Better Design

FIG. SD-11 DIP PIPE TRI-CLAMP

SD-4.7.3 Internal Components

(a) When expansion joints are used internally, the surface in contact with the process fluids shall have open convolutes without guides as the preferred design.

(b) Internal support members shall be solid, rather than hollow, which have a higher risk of fatigue and contamination problems (see Fig. SD-17).

(c) Mitered fittings for internal pipe work should only be fitted with the prior agreement between the owner/user and manufacturer. When mitered joints are used, they shall be designed and fabricated in accordance with the appropriate codes (see Fig. SD-18).

(d) Vessels shall drain to a common point and shall

Copyright ASME International
Provided by IHS under license with ASME
No reproduction or networking permitted without license from IHS
Not for Resale

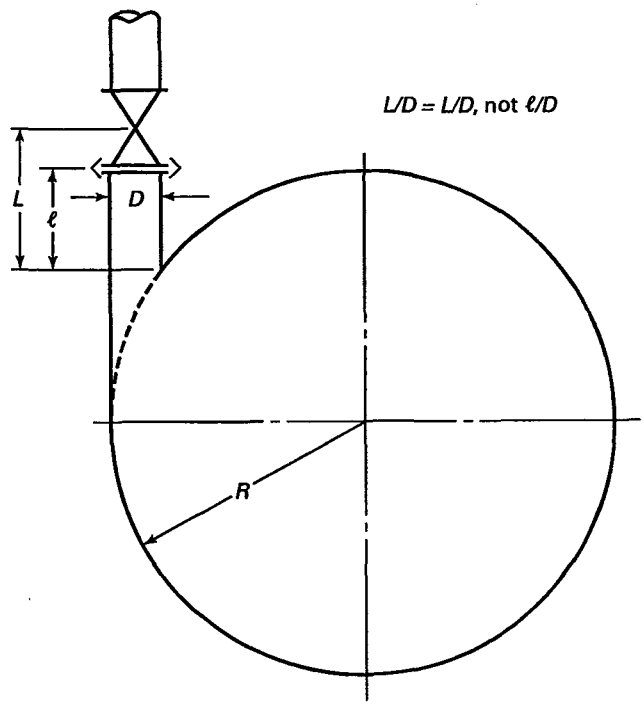

Definition of *L/D* for Tangential Inlet: Top View

FIG. SD-12 VESSEL DESIGN TANGENTIAL NOZZLES

not have multiple draining points, unless agreed to between the owner/user and manufacturer.

(e) The number of components inside the vessel should be minimized to ensure the proper drainability and cleanability of the vessel, and when used, if possible, should be supported by a solid support structure.

SD-4.7.4 Fabrication

(a) Butt welds should be used, if possible, minimizing lap joint welds and eliminating stitch welding.

(b) Flanges are not recommended, and their use shall be minimized. The bore of weld neck flanges shall be the same as the ID of the connected pipe or tubing to prevent ledges and nondrainable areas.

(c) Where it is inevitable and class 150 slip-on flanges are used, the bore side bevel weld should be designed in a way to eliminate potential CIP difficulties.

(d) During handling and transportation, vessels and their parts and piping assemblies shall be suitably protected to prevent damage to polished surfaces.

SD-4.7.5 Finishes

(a) Surface finishes shall be specified and measured as required by Part SF. Surface finish coupons shall be submitted when agreed to by the owner/user and manufacturer.

(b) Interior surface finish specifications shall pertain to all the wetted or potentially wetted surfaces (e.g., vapor space, nozzle necks, agitators, thermowells, dip tubes, baffles, etc.).

(c) The polishing of a connection face, body flange, etc., shall extend up to the first O-ring gasket grove.

SD-4.8 Agitators and Mixers

SD-4.8.1 General (02)

(a) Agitators and mixers with their associated components shall be accessible to the cleaning fluids as specified by the end user.

(b) For cleaning purposes the annular space shall have the target value of *L/A* ratio of 2:1 or a minimum of 1 in. (25 mm) gap (whichever is larger) between the agitator shaft and the agitator nozzle.

(c) The agitators and mixers shall be installed in a way that ensures ready access for routine maintenance.

(d) The manufacturers of magnetically driven mixers shall supply written verification that the bearings are

Copyright ASME International
Provided by IHS under license with ASME
No reproduction or networking permitted without license from IHS
Not for Resale

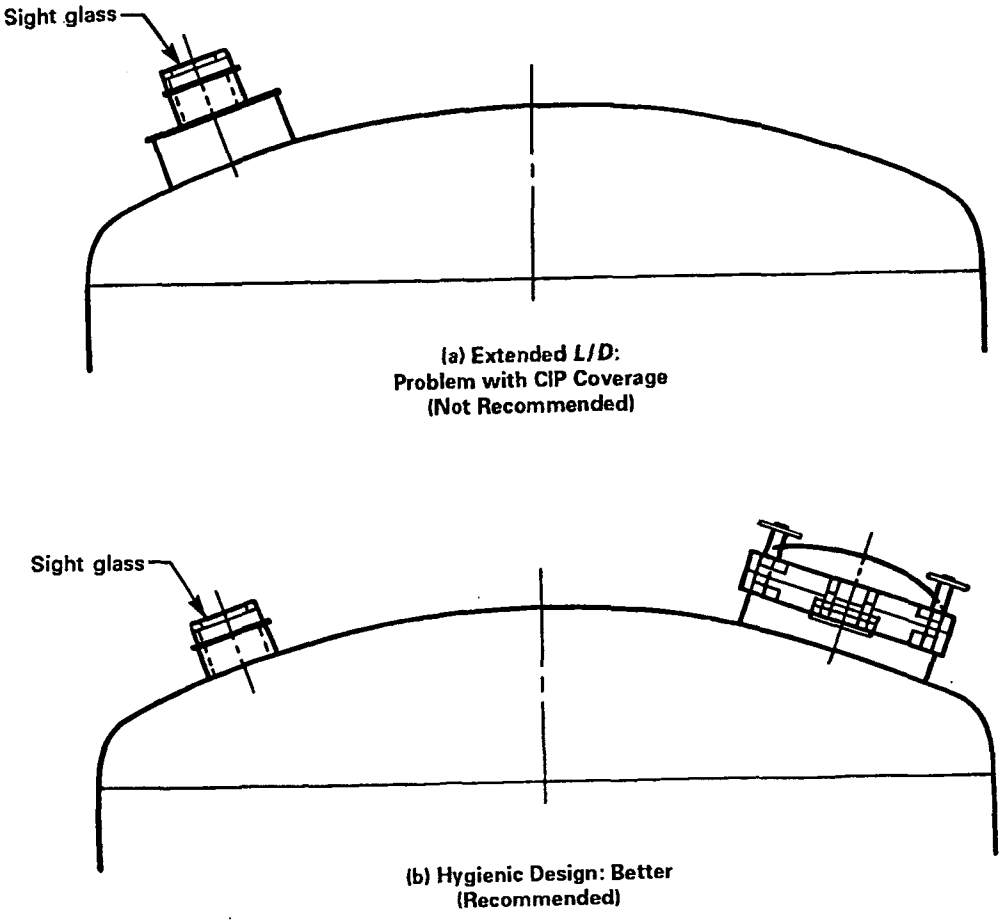

FIG. SD-13 VESSEL SIGHT GLASS LOCATION

manufactured from materials that minimize particle generation and are designed for cleanability.

(e) Drip shields shall not be used internally.

(f) Hidden surfaces or shadow forming surfaces, such as the underside of shaft couplings or impeller hubs, shall be accessible to the cleaning fluids as specified by the end user.

(g) The manufacturers of agitators and mixers shall verify the sterility and cleanability of their equipment as specified and agreed to with the end user.

(h) Composite gearing, couplings, shafts, housings, etc., shall not be used unless specifically approved by the owner/user.

(i) Clamped mounting flanges may be used only when the torque requirements that ensure an appropriate seal can be achieved.

(j) Mechanical seals shall be of an approved hygienic design, suited for the service application and the process requirements.

(k) Hexagon socket head cap screws shall not be used if they are in contact with the product.

(l) Bottom entry agitator design shall incorporate full drainage capability.

SD-4.8.2 In-Tank Couplings (see Fig. SD-21) (02)

(a) Use of in-tank shaft couplings shall be by end user consent.

(b) Use of in-tank couplings shall be restricted to locations above the liquid level.

(c) In-tank couplings shall be of an acceptable hygienic design (see Fig. SD-21).

(d) O-rings rather than flat gaskets should be used, if possible.

(e) For bolted connections on agitator components, O-ring lock washers should be used instead of flat faced ones.

(f) Free draining type fasteners, such as acorn style nuts, should be used.

Copyright ASME International
Provided by IHS under license with ASME
No reproduction or networking permitted without license from IHS
Not for Resale

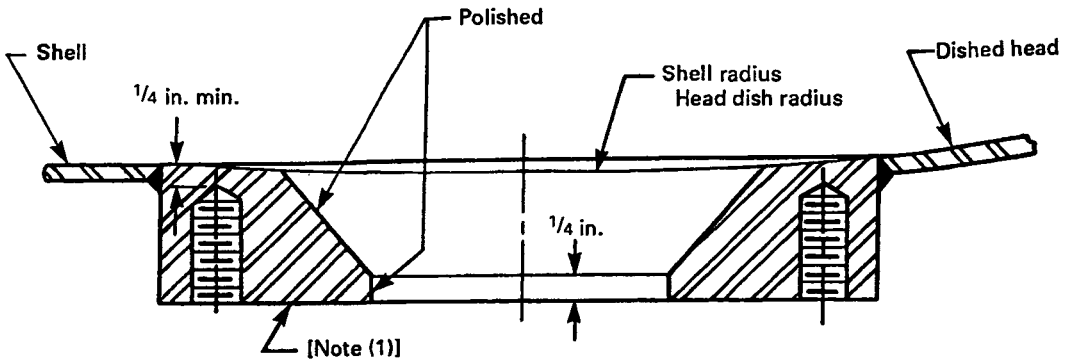

(a) Preferred

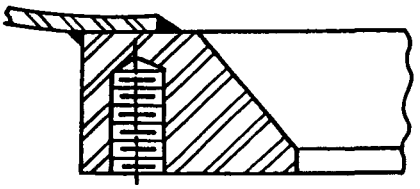

(b) Recommended

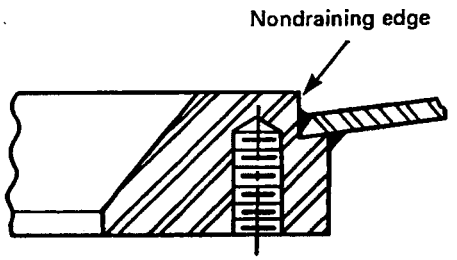

(c) Not Recommended

NOTE:
(1) If a flat gasket is used, mismatch of diameters can result in crevices.

FIG. SD-14 SIDE AND BOTTOM CONNECTIONS

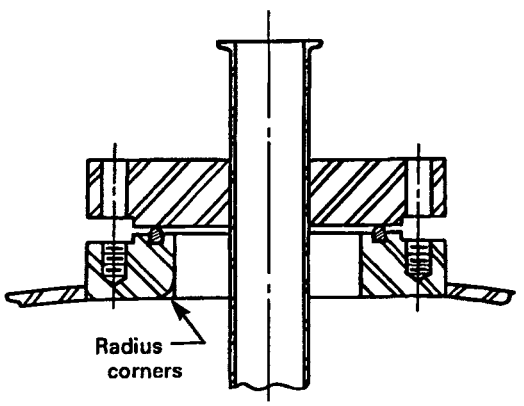

(a) Recommended

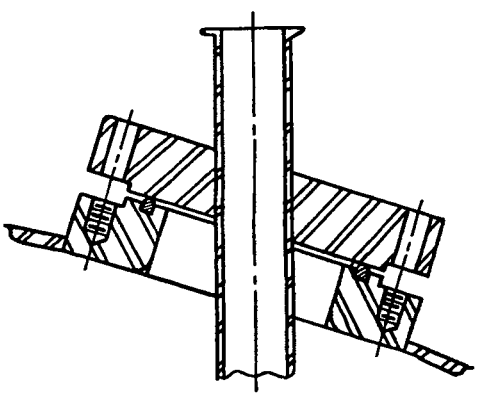

(b) Recommended

FIG. SD-15 DIP PIPE NOZZLES: REMOVABLE DESIGNS

Copyright ASME International
Provided by IHS under license with ASME
No reproduction or networking permitted without license from IHS
Not for Resale

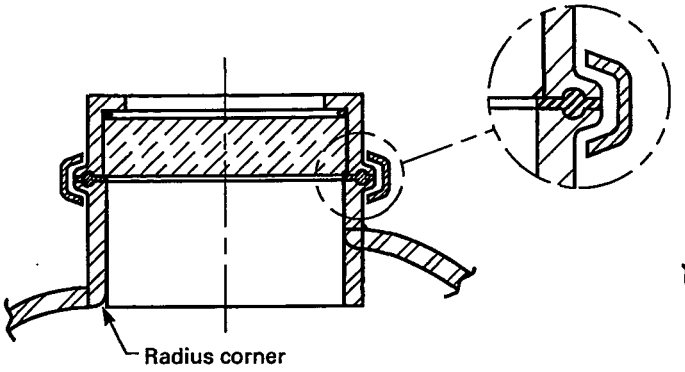

Preferred **Recommended**

GENERAL NOTE: Must have radius on inside bottom corner

(a) Recommended and Preferred

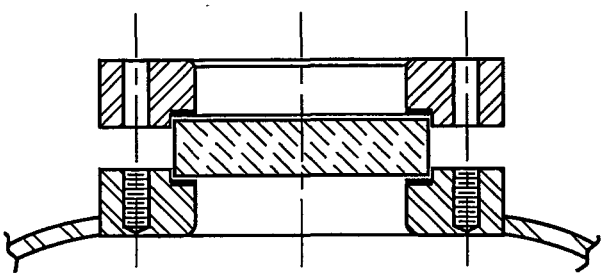

GENERAL NOTES:
(a) Should have O-rings for glass seal
(b) Needs radius on inside corner (product contact)

(b) Not Recommended

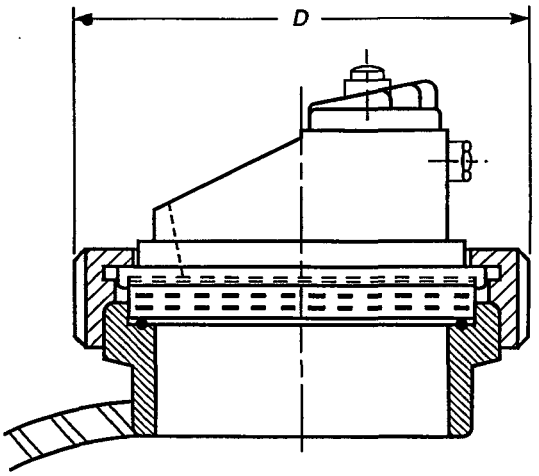

(c) Recommended

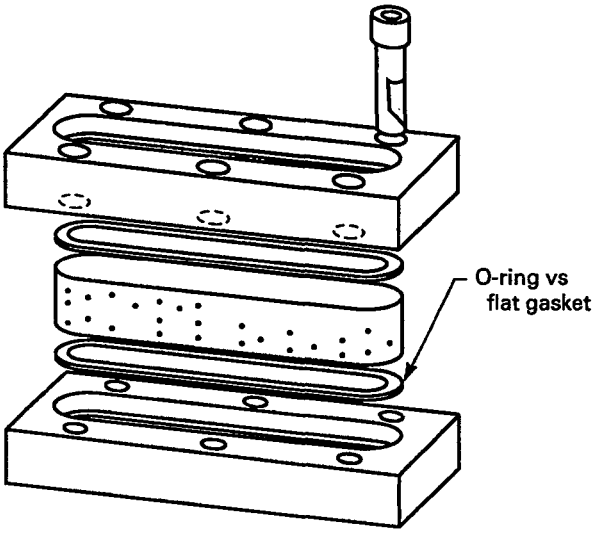

(d) Recommended (O-Ring)
Not Recommended (Flat Gasket)

FIG. SD-16 SIGHT GLASS DESIGN

(g) Acorn style nuts rather than hex headed nuts or cap screws should be used since the threads will not be exposed.

(h) In no case shall exposed threads be allowed.

(i) In-tank couplings should be fastened to blind tapped threads in the upper coupling and sealed by an O-ring (see Fig. SD-21).

(02) **SD-4.8.3 Keyways**

(a) Welded hubs are preferred over keyways.

(b) Keyways, if used when agreed to by the owner/user and manufacturer, shall have maximum possible radii with sloping surfaces.

SD-4.8.4 Shafts and Shaft Sleeves (02)

(a) All stepped shafts shall be free-draining and cleanable.

(b) Horizontal steps should, if possible, have a 3:1 slope.

(c) Radius of edges shall be as specified by SD-3.1.8.

(d) Hollow shafts may be used only if agreed to by

Copyright ASME International
Provided by IHS under license with ASME
No reproduction or networking permitted without license from IHS
Not for Resale

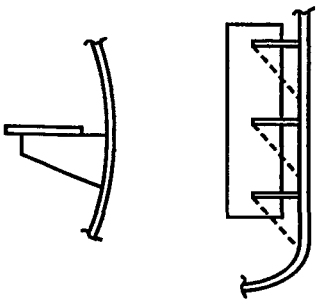

GENERAL NOTES:
(a) Flat surfaces
(b) Ledges
(c) CIP shadows

(a) Nonhygienic Design (Not Recommended)

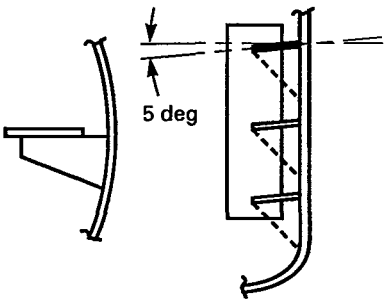

GENERAL NOTES:
(a) Still flat surfaces
(b) Sloped for drainage
(c) Still CIP shadows

(b) Semihygienic Design (Recommended)

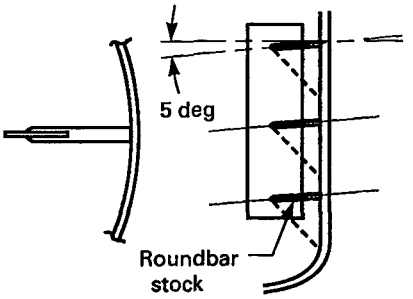

GENERAL NOTES:
(a) Sloped
(b) Minimum shadow
(c) Curved surface

(c) Full Hygienic (Preferred)

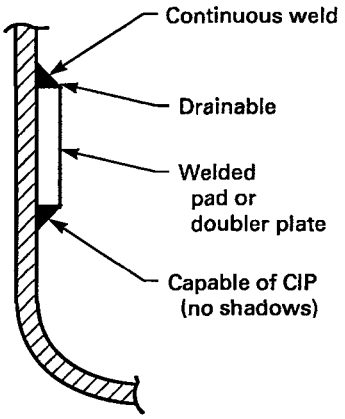

(d) Good Design (Recommended)

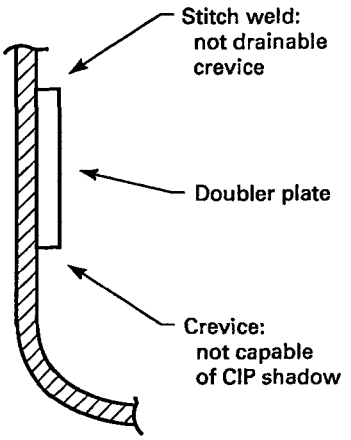

(e) Poor Design (Not Recommended)

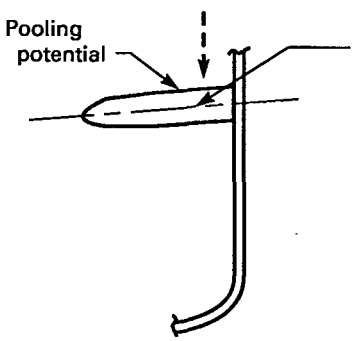

(f) Positive Slope in Only One Direction (Recommended)

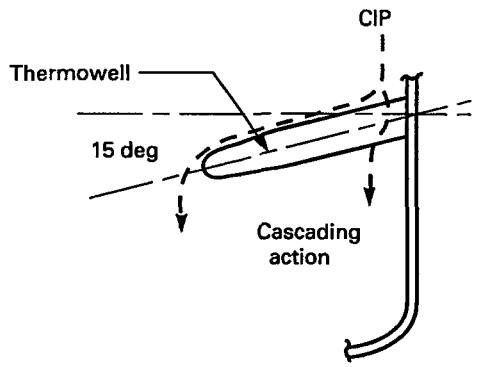

(g) Positive Slope in All Directions (Preferred)

FIG. SD-17 INTERNAL SUPPORT MEMBERS

Copyright ASME International
Provided by IHS under license with ASME
No reproduction or networking permitted without license from IHS
Not for Resale

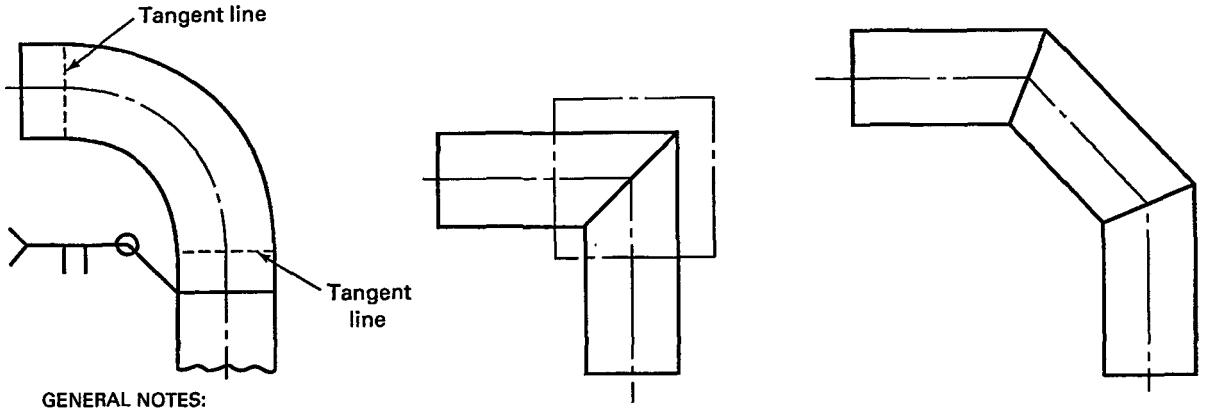

FIG. SD-18 MITERED FITTINGS

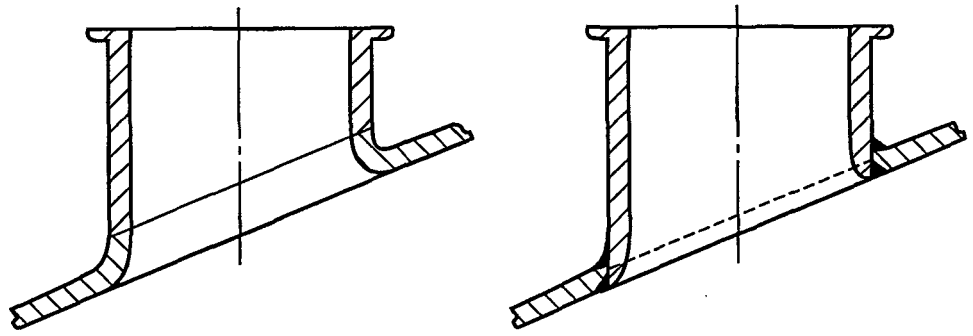

FIG. SD-19 TYPICAL NOZZLE DETAIL

the owner/user and manufacturer. Prior to installation, hollow shafts shall be inspected for cracks and porosity.

(e) Step shafts for agitators and mixers shall be used only when approved by the owner/user. When used, they shall drain properly and be accessible to the cleaning fluids as specified by the end user (see Fig. SD-20).

(02) **SD-4.8.5 Hubs and Impellers**

(a) Hubs and impellers should, if possible, be of an all welded construction.

(b) Hubs shall have sloped surfaces to prevent hold-up of liquids (see Fig. SD-22).

(c) Impellers should incorporate drain holes and sloped surfaces to ensure drainage.

(d) Flat, horizontal surfaces should be eliminated.

(e) Impellers should, if possible, be welded to the shaft.

SD-4.8.6 Steady Bearings (02)

(a) The use of steady bearings should be avoided. However, if steady bearings are used, then they shall not interfere with the free drainage of the vessel.

(b) Pedestal support members shall be constructed from solid bar stock and ensure free drainage of vessel.

Copyright ASME International
Provided by IHS under license with ASME
No reproduction or networking permitted without license from IHS
Not for Resale

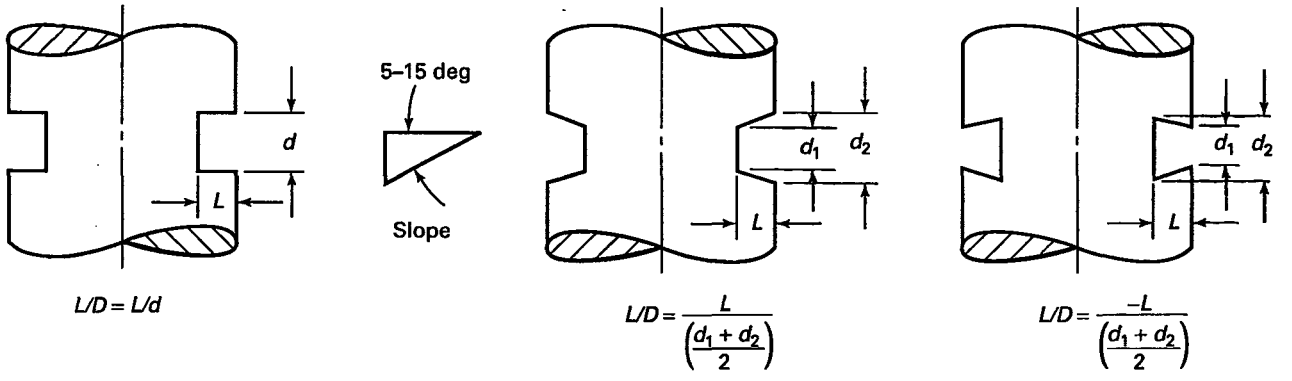

(a) Not Recommended **(b) Recommended** **(c) Not Recommended: Pooling Potential**

FIG. SD-20 STEP SHAFTS FOR AGITATORS AND MIXERS (02)

(c) Drainage holes shall be of an adequate size to prevent buildup and plugging with the vessel fluids.

(d) The gap between the steady bearing and shaft shall be sufficiently large to allow free access of cleaning fluids.

(e) Mechanical seal glands on agitators shall be designed to accept a thermocouple temperature sensor, to verify the sterility of the gland area.

(02) SD-4.8.7 Mechanical Seals

(a) Where mechanical seals are used, provision shall be made to prevent ingress of seal face material or seal flush fluids that could contaminate the process fluid (e.g., by use of debris traps, baffles, etc.).

(b) Refer to Part SG of this Standard for specific seal design details.

(c) Impellers should have drainage holes or ports, if necessary, to prevent pooling or accumulation of liquids.

SD-4.9 Heat Exchange Equipment

(02) SD-4.9.1 General

(a) Straight tube heat exchangers are easier to clean and inspect. The tubes can be seamless or full-finish welded, as specified by the owner/user or manufacturer.

(b) The heat exchanger product and non-product contact surface inspection shall be possible by conventional means.

(c) The technique used to form U-bend tubes shall minimize internal surface cracks, voids, and other surface imperfections. If requested by the end-user, the manufacturer shall supply a sectioned sample of the bend area.

(1) The sectioned sample should be from the same tube batch or heat that was used to fabricate the heat exchanger.

(2) The sectioned sample should be the smallest bend radius in the exchanger.

(3) The sample shall be sectioned so that bend's centerline is visible.

(d) The internal surface of the U-bends shall be free of relevant liquid penetrant indications, as defined by ASME BPVC, Section VIII.

(e) The ID of the U-bends shall be large enough for a borescopic inspection.

(f) Minimum recommended bend radii for heat exchangers should be as follows:

Nominal Tube OD		Min. Bend Radius	
in.	mm	in.	mm
0.375	9.5	0.625	15.8
0.500	12.7	0.750	19.1
0.625	15.8	0.938	23.8
0.750	19.1	1.125	28.6
1.000	25.4	1.500	38.1

(g) Welded shell and tube heat exchangers shall be of a double tubesheet design to prevent product contamination in the case of a tube joint failure.

(1) During fabrication, when the tubes are to be expanded into the inner and outer tubesheets, the product contact surface must not be scored.

(2) Tubes will be seal welded to the outer tubesheet.

Copyright ASME International
Provided by IHS under license with ASME
No reproduction or networking permitted without license from IHS
Not for Resale

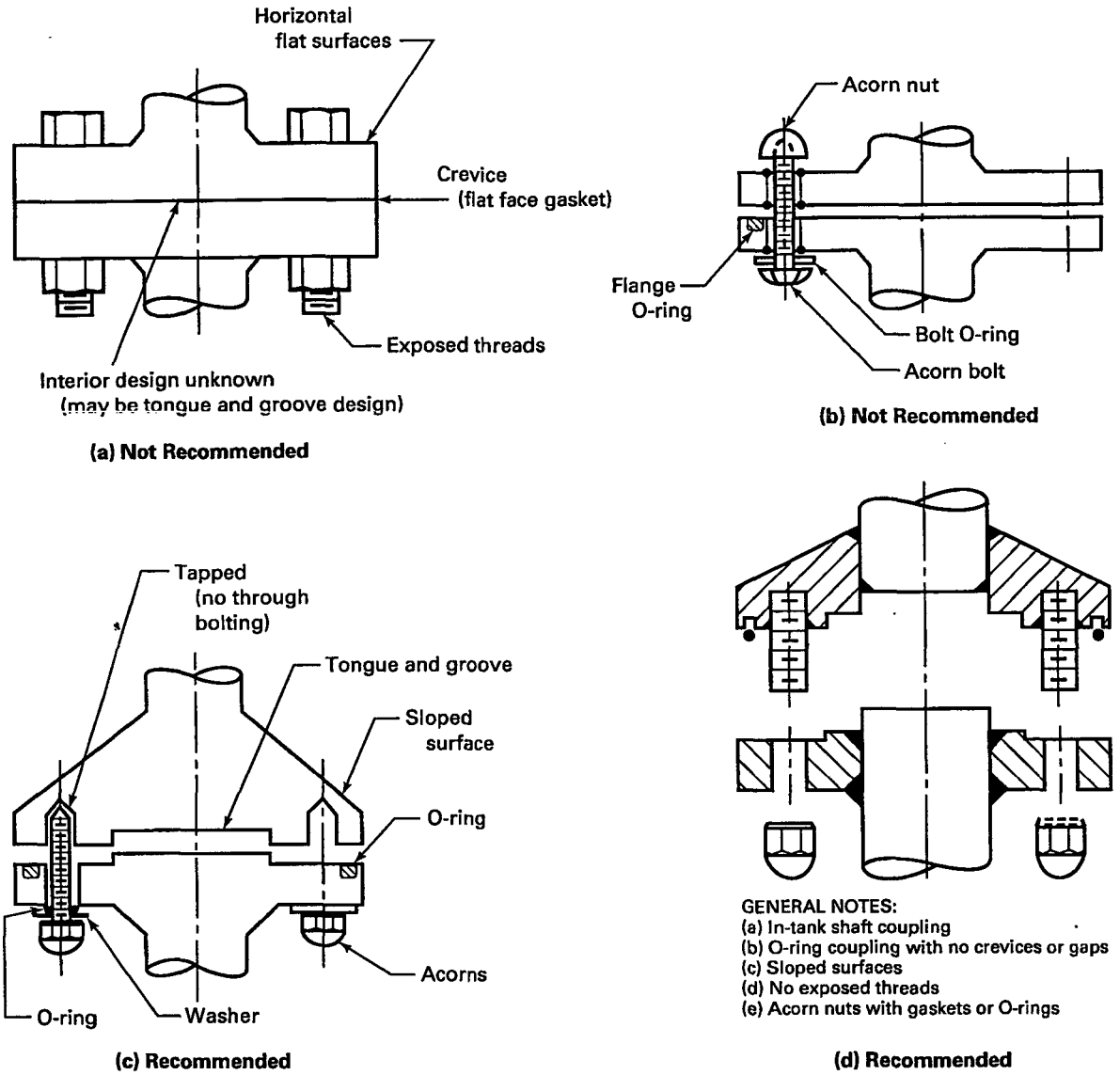

FIG. SD-21 IN-TANK COUPLINGS

(3) The distance between inner and outer tubesheets shall be sufficient to allow leak detection and inspection.

(4) Tubesheets and channels shall be drainable.

(h) The purchaser shall specify the orientation of the exchanger (i.e., horizontal or vertical), and the manufacturer shall ensure the complete product drainability at the specified orientation.

(1) In the specified orientation, the shell side shall also be drainable (e.g., WFI condensers).

(2) Transverse baffles with notches should be provided, when necessary, to drain the shell.

(3) The heat exchanger bonnet shall be match marked for proper orientation to ensure drainability or cleanability.

(i) Heat exchanger thermal and mechanical calculations shall be performed for both operating and sterilizing cycles.

(j) In shell and tube heat exchangers, the design pressure for the product side shall be no less than the design pressure of the utility side.

(k) The type of connections to the utility side (shell side) shall be agreed to between the owner/user and manufacturer.

Copyright ASME International
Provided by IHS under license with ASME
No reproduction or networking permitted without license from IHS
Not for Resale

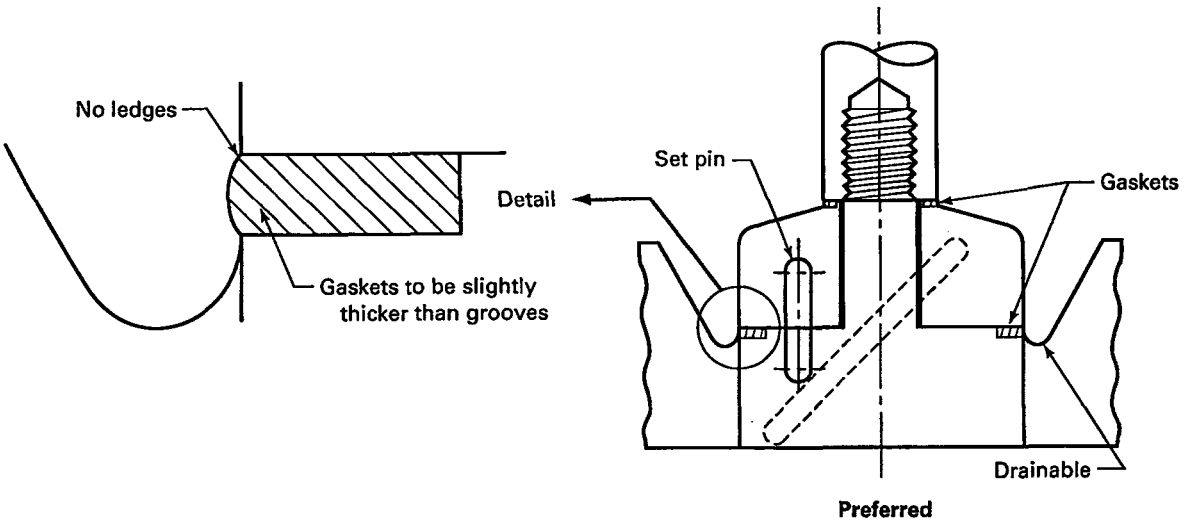

FIG. SD-22 AGITATOR BLADE DESIGN

(02) **SD-4.9.2 Cleanability and Sterility**

(a) The product contact surfaces shall be constructed for CIP and SIP or other cleaning/sterilization methods specified by the owner/end user.

(b) The cleaning and sterilization specifications shall be provided by the owner/end user prior to the design of the heat exchanger.

(02) **SD-4.9.3 Gaskets and Seals**

(a) Gaskets that are in contact with product contact shall be removable and self-positioning, and shall have readily cleanable grooves.

(b) Channel/bonnet gaskets shall be of a cleanable design.

SD-4.10 Cell Disrupters

SD-4.10.1 Product contact material shall not affect product quality or integrity.

SD-4.10.2 The device shall be designed with the ability to optimize drainability.

SD-4.10.3 The design shall incorporate nonshedding components and parts.

SD-4.10.4 Safety rupture discs shall be oriented for drainability, while maintaining system integrity and safety.

SD-4.10.5 The disrupter shall be designed for ease of disassembly to allow for COP.

SD-4.11 High Purity Water and Steam Systems

SD-4.11.1 Pure/Clean Steam Distribution System

(a) The pure/clean steam distribution system should have adequate provision to remove air during start-up and normal operations.

(b) The distribution lines should have a fall in the direction of flow as indicated in SD-3.12.1. Where necessary, increases in height should be achieved by vertical rises.

(c) Adequate provision should be made to allow for line expansion and to prevent sagging of the distribution lines, so that line drainage is not reduced.

(d) Pure/clean steam distribution systems should not be directly interconnected to any unhygienic steam systems (e.g., plant steam systems).

(e) Pockets for the collection of condensate from the steam distribution system should be of equal size to the distribution line for sizes up to 4 in. (101.6 mm), and one or two line sizes smaller for lines of 6 in. (152.4 mm) or larger. These should be trapped at the bottom.

(f) Collection pockets should be installed at least every 100 ft (approximately 30 m), upstream of control and isolation valves, at the bottom of vertical risers, and at any other low points.

(g) Condensate should be allowed to drain freely away from steam traps. The use of overhead, directly coupled, pressurized condensate return systems should be avoided.

Copyright ASME International
Provided by IHS under license with ASME
No reproduction or networking permitted without license from IHS
Not for Resale

(h) Where possible, all components within the pure steam distribution system should be self-draining.

(i) Dead legs should be avoided by the careful design of runs and the use of steam traps to remove condensate.

SD-4.11.2 Pure/Clean Steam Valves. This paragraph covers valves for isolation, regulation, and control that are part of the pure steam system, and are subject to continuous steam service.

(a) Where possible, valves for pure/clean steam service shall be designed for optimum drainability, and in all cases shall have minimal fluid hold-up volumes.

(b) Ball valves are an acceptable industry standard for isolation purposes on continuous pure/clean steam service.

(c) All components of pure/clean steam service shall be suitable for continuous steam service at the temperatures and pressures specified by the owner/user.

(d) Requirements for operation under CIP and SIP conditions (see SD-4.6) can be relaxed when agreed to by the owner/user and manufacturer.

(e) Secondary stem seals with telltale connections are not required for steam service.

(f) Steam service valves shall be capable of being regularly maintained, either in- or out-of-line.

SD-4.11.3 Steam Traps

(a) Steam trap bodies shall have an internal surface finish as agreed to by all parties.

(b) Where used in process systems, the trap shall be capable of effectively venting air.

(c) Where installed on process systems, traps shall be maintainable to allow easy inspection and cleaning.

(d) The trap design and mode of operation shall be such that the risk of soil attachment to the internal wetted surfaces is minimized, especially around the valve head and seat.

(e) The trap shall be sized, operate, and be installed such that there is no backup of condensate into the process equipment under operating conditions.

(f) The trap shall be designed such that the normal mode of mechanical failure will be in the open position.

SD-4.11.4 High Purity Water Systems

(a) High purity water systems, such as USP Grade Water-for-Injection (WFI), USP Grade Purified Water, Reverse Osmosis Water, and USP Grade Waters should be designed as looped circulatory systems, rather than noncirculating, dead-ended, branched systems.

(b) Loops shall be designed with sufficient velocity to prevent stagnation in any dead legs.

SD-4.12 WFI Generators and Clean/Pure Steam Generators

(a) All surfaces that shall come into direct contact with the product, feedwater, or condensate/blowdown produced by the units shall be constructed of 316 stainless steel with all welded parts of 316L stainless steel or other material as specified by the owner/user.

(b) Connections to the product, feedwater, or condensate/blowdown produced by the units shall be made by the use of hygienic design fittings. All gasketed fittings should be constructed in such a manner as to avoid dead legs and crevices.

(c) Units should be completely drainable and should not contain any areas where chemicals used to clean and passivate the units are trapped or not easily flushed during rinsing operations.

SD-4.13 Micro/Ultrafiltration and Chromatography Systems

(a) Skid pumps designed for both process and CIP shall be designed to provide turbulent flow for cleaning. All process piping systems that include piping, tubing, and fluidic components shall be sloped for adequate drainage. For all low points in the system, a drain point shall be installed. A common drain port on the skid is preferred.

(b) Piping and equipment hold-up volume shall be minimized.

(c) Ultrafiltration cartridge housings shall be designed with connections and covers that will allow the unit to drain completely.

SD-4.14 Sterilizers/Autoclaves (02)

It is recommended that the general design concepts in this Part be followed relative to sterility and cleanability for these items.

SD-4.15 CIP Systems and Design

SD-4.15.1 General. The CIP skid and system is one of the most important pieces of equipment when considering cleanability and cross-contamination. Functional components of the CIP such as filters, pumps, vessels, tubing, and piping shall be designed to be self-cleaning and abide by the guidelines of this Part.

(a) To achieve the objective of a CIP process, the design shall consider the application of a CIP unit, chemical feed system, spray devices, and CIP supply and return piping. The inclusion of this equipment does not guarantee a cleanable process, if not properly

Copyright ASME International
Provided by IHS under license with ASME
No reproduction or networking permitted without license from IHS
Not for Resale

applied. The integrated system makes it possible to achieve complete and uniform control of time, temperature, and chemical concentration, all of which are important to success with any mechanical spray or pressure recirculation CIP process. Proper application and engineering with respect to return pump selection, spray device selection, and piping installation make it possible to conduct such cleaning operations with a high degree of uniformity and dependability.

(b) SD-4.15 defines the functionality, design, application, and construction requirements for CIP processes, CIP skids, CIP spray devices, and cleaning chemical delivery systems.

(c) CIP System Functionality

(1) A CIP system is a packaged system of properly integrated components including:

(a) a recirculating unit;

(b) chemical feed equipment; and

(c) system controls.

(2) This system is designed to provide controlled spray and deluge/flooded cleaning operations of equipment and piping.

(3) The following CIP variables are important to success with any cleaning process:

(a) time of exposure to cleaning and rinsing solutions;

(b) temperature of wash and rinse solutions;

(c) chemical concentration of wash solutions;

(d) CIP solution flow rates; and

(e) hygienic design of the equipment or system being cleaned.

(4) A CIP system should include the capability to monitor and record the following CIP variables:

(a) timing of CIP steps (contact time of solutions);

(b) CIP supply temperature (if return system used);

(c) CIP return temperature;

(d) chemical conductivity (pH) for wash solutions;

(e) final rinse resistivity;

(f) CIP solution flow rate;

(g) CIP supply pressure; and

(h) spray ball rotation (if used).

(5) CIP System Operating Capabilities. The CIP system shall be capable of delivering reproducible cleaning solutions at requisite flow rates and temperature (either in a recirculated or once-through mode).

SD-4.15.2 Design Concepts

(a) The centralized CIP system consists of a recirculation tank that is mounted on a common frame with all requisite valves, pumps, and controls.

(b) The CIP system should consider the operating volume design for the water consumption, chemical and biowaste effluent, and energy required to clean a given circuit or piece of equipment.

(c) The recirculation tank, if used, shall have the capability of being completely drained after each CIP program step. The CIP recirculation tank shall be self-cleaning via a spray device and the requisite valving and piping to accomplish this action as a part of each cycle.

(d) Valves used in the CIP system should be (hygienically) consistent with the valves used in the processing system.

(e) Double seated mix-proof valves having the 3A symbol may be used in place of double block-and-bleed isolation valves to isolate CIP/steam/USP Grade purified water, provided there is agreement between the owner/user and manufacturer.

(f) The system will have flow control, either via pump speed/flow or by means of flow control valves.

(g) Other types of valves may be used for nonproduct streams such as steam or air purge service applications when agreed to by the owner/user and manufacturer.

(h) CIP supply and return pumps shall meet guidelines for hygienic pumps as outlined in this Standard.

(i) Return pumps are normally sized to handle 1.5 times as much solution as is being sprayed into the tank to provide a margin of performance that results in quick drainage (emptying) of the vessel following burst rinsing or chemical cleaning recirculation.

(j) The CIP and process systems shall be designed to clean through each valve in contact with product. (02)

SD-4.15.3 CIP Flow Rate Guidelines for Process Lines.

Process lines should be cleaned at a velocity to ensure turbulent flow in pipelines, and maintain a fully flooded line.

This is usually achieved at a velocity of 5 fps (1.52 mps). See Table SD-6 for recommended flow rates.

SD-4.15.4 Design Guidelines for Cleaning Process Vessels

(a) Dished-head vertical vessels are cleaned with the majority of flow directed toward the upper head and sidewall area at the knuckle radius. Gravity then provides for a continuous solution sheeting over the side wall and bottom head.

(b) The following guideline for cleaning flow rates for vertical process vessels with dished heads provides sufficient coverage for typical cleaning loads:

Copyright ASME International
Provided by IHS under license with ASME
No reproduction or networking permitted without license from IHS
Not for Resale

(02) **TABLE SD-6 RECOMMENDED FLOW RATES TO ACHIEVE 5 fps (1.52 mps)**

Sanitary Tube Size					
OD		ID		Flow Rate	
in.	mm	in.	mm	gpm	Lpm
0.5	12.7	0.37	9.4	1.7	6.5
0.75	19.1	0.625	15.9	4.8	18
1.0	25.4	0.875	22.2	9.4	35
1.5	38.1	1.375	34.9	24.0	90
2.0	50.8	1.850	47	42.8	162
3.0	76.2	2.875	73	102.0	386

(02) **TABLE SD-7 RECOMMENDED FLOW RATES FOR CLEANING VERTICAL CYLINDRICAL VESSELS HAVING DISHED HEADS**

Vessel ID		Flow Rate	
ft	mm	gpm	Lpm
1.5	457	12 to 14	45 to 53
2	610	16 to 19	60 to 72
3	914	24 to 28	90 to 106
4	1,219	31 to 38	117 to 144
5	1,524	39 to 47	148 to 178

flow rate = for recommended flow rates for various vessel IDs

(c) Cylindrical horizontal vessels are cleaned with the majority of flow directed toward the upper one-third of the vessel. Gravity then provides for a continuous solution sheeting over the lower surfaces.

(d) To provide sufficient coverage in cylindrical horizontal vessels, the following guideline has been found adequate for cleaning flow rates of vessels in biotechnology facilities.

flow rate = 0.1 to 0.3 gpm per ft^2 of total internal tank surface (4 to 12 Lpm per m^2)

(e) Spray devices designed to provide the specific flow rates noted above may also be designed to ensure that specific streams are directed at appurtenances such as baffles, agitator impellers, and nozzles.

(f) It is desirable to clean tanks under conditions that result in a minimum liquid level in the vessel.

(g) If vortex formation is suspected in a vessel with a center outlet and it adversely affects cleanability (CIP), the following modifications are to be considered.

(1) Increase the outlet size of the vessel.

(2) Install vortex breakers.

(3) Increase the operating volume of the vessel.

SD-4.15.5 CIP Return Flow Design. Return system engineering shall give consideration to balancing solution flow (i.e., regulating the discharge of the return pump from each portion of the system). This is accomplished by sizing pump impellers, sizing lines, and (when necessary) installing restrictors to control flow.

SD-4.15.6 CIP Spray Devices

(a) Spray devices shall produce a uniform spray coverage over a particular defined area of the equipment.

(b) The spray device shall effectively clean all nozzles and projections into the equipment.

(c) The spray device itself shall be self-cleaning and self-draining.

(d) The spray device shall be manufactured of materials consistent with the processing system.

(e) The performance of the spray device should not be affected by variations of ±20% in flowrate or ±20% in delivered pressure, at the design conditions.

(f) The spray device shall be designed in such a manner as to be easily removable if required. If removable, then a positioning device or mark shall be incorporated into the design to allow for proper location and cleaning of the equipment.

(g) For optimum cleanability, fixed ball-type sprays operating in the range of 15 to 30 psi are suggested. Dynamic spraying/cleaning devices may be used with the approval of the owner/user.

(h) The location of spray devices within a vessel or piece of equipment shall optimize the cleanability of the equipment. The location of manways, access ports, and other internal appurtenances shall be considered in location and design of spray devices.

SD-5 TESTING AND INSPECTION

All testing shall be performed using systems that avoid surface contamination of the equipment.

There are two types of testing and quality assurances performed: performance/calibration and sterility/cleaning. All testing and quality assurance documentation will be stamped with date and time. For each test documentation sheet, signatures of the test personnel and a supervisor shall be required, confirming the test results.

Copyright ASME International
Provided by IHS under license with ASME
No reproduction or networking permitted without license from IHS
Not for Resale

SD-5.1 Spray Ball Test

The purpose of a spray ball test is to document proper fluid coverage of, for example, the internal parts of a tank or piece of equipment. The results give information about cleanability and fluid coverage. All internal instruments shall be installed (e.g., agitators, level probes, dip pipes) during the spray ball testing. Spray balls shall be drainable, shall provide hole patterns to ensure that complete coverage is attained, and shall be properly manufactured to prevent corrosion.

The test shall be performed by spraying a dye (e.g., riboflavin) on the entire interior of the equipment product/process contact walls, nozzles, and miscellaneous surfaces. The dye shall be allowed to dry for a set period of time, as agreed to by all parties, prior to the start of the cleaning test. Present industry standards allow for an overnight drying period (approximately 12 hr). The parameters for the following rinse with deionized or purified water via the spray ball(s) shall be defined and agreed to by the owner/user and manufacturer:

(a) pressure;

(b) flow (per spray device); and

(c) burst times.

Acceptance shall be determined when all (100%) of the dye has been removed via the rinse. This shall be visually determined using an ultraviolet lamp, or by other verification methods as agreed to by the owner/user and manufacturer.

SD-5.2 Sterility/Cleaning Testing

Sterility and cleanability testing (other than spray ball testing) shall be as agreed to by the owner/user and manufacturer, and in accordance with accepted industry standards.

SD-5.3 Hydrostatic Test

Where applicable, all product contact surfaces shall be hydrostatically tested with clean purified or deionized water filtered at 0.2 μm. If purified or deionized water is not available, then the water quality for testing shall be agreed to by the owner/user and manufacturer.

SD-5.4 Drainability Test

A drainability test for vessels shall be conducted as agreed to by all parties. As a proposed test procedure, the following shall be considered. The bottom head of the vessel shall be leveled with the outlet nozzle flange face (to within a tolerance agreed to) and shall be filled approximately to the weld seam. The outlet valve shall be opened, and the vessel allowed to drain by gravity. There shall be no puddles of water left on the bottom of the vessel greater than 5 mm in diameter (or as agreed to by the owner/user and manufacturer). If there are any puddles greater than the agreed-upon diameter, a thumb or soft rubber dowel is to be pushed into the center of the puddle, displacing the water. If water returns to the puddle, that area shall be repaired to the satisfaction of the owner/user.

SD-6 DOCUMENTATION

Documentation requirements shall be agreed to at the outset of a design project and shall be available upon request or submitted at the agreed-upon time to support the requirements of this Standard, as agreed to by the owner/user and manufacturer.

For all bioprocessing ASME Code stamped vessels, National Board registration is recommended to maintain vessel data on file.

Technical documentation to support the design of equipment and verify conformance with sterility and cleanability criteria may include, but not be limited to, the following:

(a) material handling procedures;

(b) welding procedures;

(c) mechanical and electrochemical polishing procedures;

(d) standard operating and maintenance procedures and manuals;

(e) installation procedures;

(f) piping and instrumentation diagrams and technical references;

(g) original equipment manufacturer's data;

(h) surface finish certifications;

(i) detail mechanical drawings and layouts;

(j) certificates of compliance;

(k) technical specification sheets of components;

(l) manufacturer's data and test reports;

(m) NDE reports;

(n) shop passivation procedure; and

(o) material approvals and certifications from suppliers.

Manufacturing documentation shall be maintained throughout the design and manufacture for each component, assembly, part, or unit.

All documentation shall be retained by the owner/user. As agreed to by the owner/user and manufacturer, documentation from the manufacturer will be retained

Copyright ASME International
Provided by IHS under license with ASME
No reproduction or networking permitted without license from IHS
Not for Resale

for the agreed-upon duration of time, but not less than three years after manufacture.

SD-7 RESPONSIBILITIES

When designing, specifying, or selecting equipment and systems that will be sterilizable and cleanable, it is necessary and important that all parties coordinate all phases of the project (design, specification, fabrication, testing, installation, start-up, validation, and actual production) to ensure sterilizable and cleanable equipment and systems.

It shall be the responsibility of all parties involved to adhere to the concepts of this Part (as they apply) to advance the knowledge and database for sterilizable and cleanable equipment and systems.

Copyright ASME International
Provided by IHS under license with ASME
No reproduction or networking permitted without license from IHS
Not for Resale

PART DT (02)
DIMENSIONS AND TOLERANCES FOR STAINLESS STEEL AUTOMATIC WELDING AND HYGIENIC CLAMP TUBE FITTINGS AND PROCESS COMPONENTS

(02) DT-1 SCOPE

This Part describes the overall dimensions, tolerances, and markings for commercial stainless steel tube automatic-weld and hygienic clamp fittings and process components. In addition to fittings, this Part also covers the tolerances and marking of factory made stainless steel process components including, but not limited to, valves, pumps, filter housings, and instrumentation.

This Part describes the fittings made for use with nominal outside diameter (OD) tubing for the sizes listed in Table DT-1. The dimensions in metric units are conversions from the U.S. Customary units, and are listed for reference only. For nominal metric size tubing and fittings, refer to the appropriate international standards.

Elbows furnished to this Standard shall not be mitered.

DT-2 PRESSURE RATING

Fittings manufactured to this Part shall carry the pressure ratings shown in Table DT-2, and shall have an ambient temperature bursting strength of at least three times the 100°F rated internal working pressure as shown in Table DT-2.

Fabricated components employing welds shall be rated at 100% of the above ratings. All welds shall meet the provisions of MJ-6 and Fig. MJ-1.

(02) DT-3 MARKING

DT-3.1 Marking Information

Except as specified in DT-3.3, each fitting and process component shall be marked to show the following:

(a) heat number/code traceable to material test report for each component part of the fitting;

(b) material type;

(c) manufacturer's name, logo, or trademark;

(d) reference to this Standard (ASME BPE); and

(e) internal surface symbol for the appropriate BPE specification.

DT-3.2 Method of Marking

The manufacturer's name or trademark, specification number, internal surface symbol, and heat numbers shall be permanently marked on the fitting or process component by any suitable method not injurious to the product contact surface of the fitting or process component.

DT-3.3 Exceptions

(a) Where the size of the fitting or process component does not permit complete marking, the identification marks may be omitted in reverse of the order presented above. However, the heat number and material type must be marked on the fitting or process component.

(b) Where the size of the fitting or process component does not permit complete marking of the heat number, a manufacturer's code number is acceptable under this Standard.

DT-4 MATERIALS (02)

Generally, materials furnished to this Standard shall be 316, 316L, or other material agreed to by the purchaser and manufacturer.

Where 316L is specified, the material of the automatic weld end shall conform to the requirements for chemical composition as prescribed in Table DT-3.

DT-5 METAL THICKNESS (02)

As these fittings and process components are to match tube dimensions, the thickness of the weld ends must conform with the tolerances listed in Table DT-5 and Table DT-6. The nominal wall thickness of the

Copyright ASME International
Provided by IHS under license with ASME
No reproduction or networking permitted without license from IHS
Not for Resale

(02)

TABLE DT-1 NOMINAL OD TUBING SIZES

Nominal Size, in.	Tube OD		Tube Wall Thickness		Hygienic Clamp Size, in.
	in.	mm	in.	mm	
1/4	0.250	6.35	0.035	0.89	3/4
3/8	0.375	9.53	0.035	0.89	3/4
1/2	0.500	12.70	0.065	1.65	3/4
3/4	0.750	19.05	0.065	1.65	3/4
1	1.000	25.40	0.065	1.65	1 1/2
1 1/2	1.500	38.10	0.065	1.65	1 1/2
2	2.000	50.80	0.065	1.65	2
2 1/2	2.500	63.50	0.065	1.65	2 1/2
3	3.000	76.20	0.065	1.65	3
4	4.000	101.60	0.083	2.11	4
6	6.000	152.40	0.109	2.77	6

GENERAL NOTE: Refer to ASTM A 270, Supplement 2 for tubing tolerances.

TABLE DT-2 HYGIENIC UNIONS

Temperature		Weld Joint, All Sizes		< 3 in. Clamp		3 in. Clamp		4 in. Clamp		6 in. Clamp	
°F	°C	psig	kPa (gage)	psig	kPa (gage)	psig	kPa (gage)	psig	kPa (gage)	psig	kPa (gage)
100	38	200	1,379	200	1,379	200	1,379	200	1,379	150	1,034
250	121	200	1,379	165	1,138	150	1,034	125	862	75	517

GENERAL NOTE: These pressure ratings apply to the hygienic clamp and gasket.

(02)

TABLE DT-3 CHEMICAL COMPOSITION FOR AUTOMATIC WELD ENDS, %

Carbon, max	0.035
Chromium	16.00–18.00
Manganese, max	2.00
Molybdenum	2.00–3.00
Nickel	10.00–15.00
Phosphorus, max	0.040
Silicon, max	0.75
Sulfur	0.005–0.017

fittings and process components shall be the same as the tube to which they are welded.

After fabrication and surface treatment, the wall thickness in any formed part of the fitting or process component, beyond the control portion as defined in DT-8 shall be a minimum of 65% of the nominal wall thickness. For guidelines regarding all shop and field welds, refer to Part MJ.

(02) DT-6 FITTING DIMENSIONS

Dimensions for the fittings covered by this Standard are given in Tables DT-7 through DT-30.

TABLE DT-4 TANGENT LENGTHS (02)

Nominal OD Tube Size, in.	Tangent, T	
	in.	mm
1/4	1.50	38.10
3/8	1.50	38.10
1/2	1.50	38.10
3/4	1.50	38.10
1	1.50	38.10
1 1/2	1.50	38.10
2	1.50	38.10
2 1/2	1.50	38.10
3	1.75	44.45
4	2.00	50.80
6	2.50	63.50

All components shall have minimum tangent lengths for automatic welding per Table DT-4. The tangent length is defined as the straight length measured from the welding end.

All sizes shown are nominal OD tube sizes.

Fittings not specifically described in Tables DT-7 through DT-30 may be constructed using combinations of centerline-to-end dimensions from the tables.

Copyright ASME International
Provided by IHS under license with ASME
No reproduction or networking permitted without license from IHS
Not for Resale

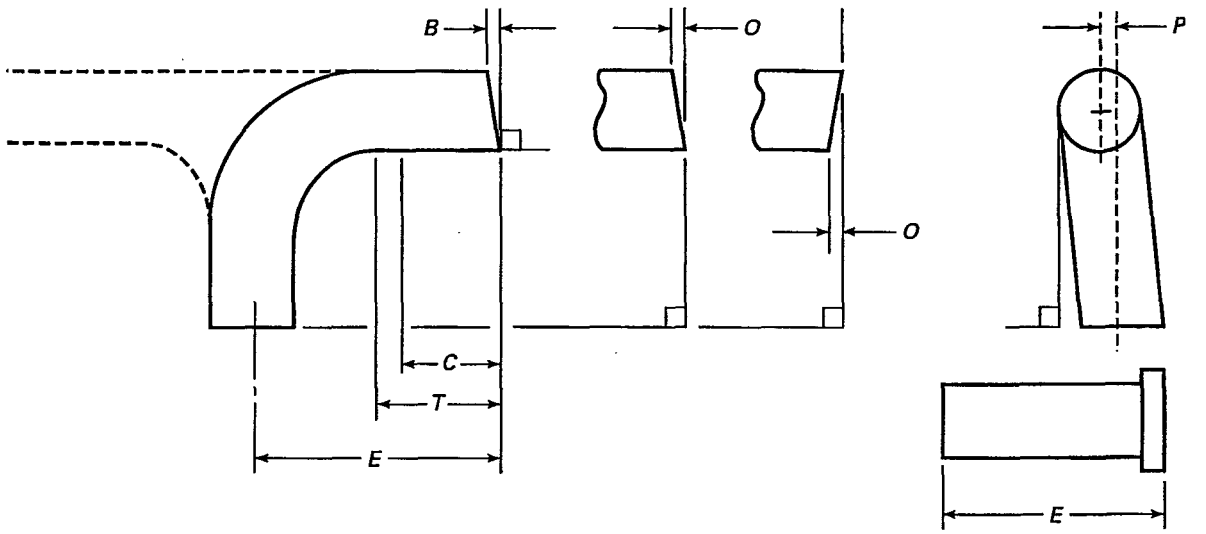

TABLE DT-5 FINAL TOLERANCES FOR MECHANICALLY POLISHED FITTINGS AND PROCESS COMPONENTS (02)

Nominal Size, in.	OD		Wall Thickness		Squareness Face to Tangent, *B*		Off Angle, *O*		Off Plane, *P*	
	in.	mm	in.	mm	in.	mm	in.	mm	in.	mm
1/4	± 0.005	± 0.13	+0.003/–0.004	+0.08/–0.10	0.005	0.13	0.009	0.23	0.030	0.76
3/8	± 0.005	± 0.13	+0.003/–0.004	+0.08/–0.10	0.005	0.13	0.012	0.30	0.030	0.76
1/2	± 0.005	± 0.13	+0.005/–0.008	+0.13/–0.20	0.005	0.13	0.014	0.36	0.030	0.76
3/4	± 0.005	± 0.13	+0.005/–0.008	+0.13/–0.20	0.005	0.13	0.018	0.46	0.030	0.76
1	± 0.005	± 0.13	+0.005/–0.008	+0.13/–0.20	0.008	0.20	0.025	0.64	0.030	0.76
1 1/2	± 0.008	± 0.20	+0.005/–0.008	+0.13/–0.20	0.008	0.20	0.034	0.86	0.050	1.27
2	± 0.008	± 0.20	+0.005/–0.008	+0.13/–0.20	0.008	0.20	0.043	1.09	0.050	1.27
2 1/2	± 0.010	± 0.25	+0.005/–0.008	+0.13/–0.20	0.010	0.25	0.054	1.37	0.050	1.27
3	± 0.010	± 0.25	+0.005/–0.008	+0.13/–0.20	0.016	0.41	0.068	1.73	0.050	1.27
4	± 0.015	± 0.38	+0.008/–0.010	+0.20/–0.25	0.016	0.41	0.086	2.18	0.060	1.52
6	± 0.030	± 0.76	+0.015/–0.015	+0.38/–0.38	0.030	0.76	0.135	3.43	0.060	1.52

GENERAL NOTE: Tolerance on *E* end-to-end, center-to-end: 1.27 mm (±0.050 in.). See Table DT-6 for electropolished wall thickness tolerances. See para. DT-8 (Tolerances) for "C" control portion lengths.

For tees and crosses, use Table DT-12 for standard clamp leg lengths, Table DT-11 for short outlet branch clamp lengths, Table DT-13 for short outlet run clamp lengths, and Table DT-25 for weld end lengths. Adjacent legs less than 180 deg apart cannot be constructed using more than one short outlet sanitary hygienic clamp.

DT-7 TESTS

Hydrostatic testing of each fitting is not required in this Standard; however, fittings shall be capable of withstanding a hydrostatic test pressure of 1.5 times the pressure rating shown in Table DT-2 at 100°F (38°C).

DT-8 TOLERANCES (02)

Tables DT-5 and DT-6 list the required tolerances for fittings and process components covered by this Standard.

These tolerances shall apply after heat and surface treatment.

The control portion of the fitting or process components is defined as the length from the welding end over which tolerances for wall thickness and OD are

Copyright ASME International
Provided by IHS under license with ASME
No reproduction or networking permitted without license from IHS
Not for Resale

(02) **TABLE DT-6 FINAL TOLERANCES FOR ELECTROPOLISHED FITTINGS AND PROCESS COMPONENTS**

	Wall Thickness	
Nominal Size, in.	in.	mm
1/4	+0.003/–0.006	+0.08/–0.15
3/8	+0.003/–0.006	+0.08/–0.15
1/2	+0.005/–0.010	+0.13/–0.25
3/4	+0.005/–0.010	+0.13/–0.25
1	+0.005/–0.010	+0.13/–0.25
1 1/2	+0.005/–0.010	+0.13/–0.25
2	+0.005/–0.010	+0.13/–0.25
2 1/2	+0.005/–0.010	+0.13/–0.25
3	+0.005/–0.010	+0.13/–0.25
4	+0.008/–0.012	+0.20/–0.30
6	+0.015/–0.017	+0.38/–0.43

maintained. The length of the control portion is fixed for all sizes at 0.75 in. (19 mm).

(02) DT-9 WELDING ENDS

Automatic weld ends furnished to this Standard shall be furnished with square-cut ends, free from burrs and breaks.

(02) DT-10 HYGIENIC CLAMP ENDS

Fittings and process components furnished to this Standard with hygienic clamp ends shall employ gasket materials and a gasket design capable of withstanding the temperatures and pressures established in Table DT-2 and meeting the requirements of Part SG.

DT-11 HEAT TREATMENT

Heat treatment of fittings is not a requirement of this Standard.

Where annealing is used, the annealing procedure shall consist of heating the material to a minimum temperature of 1,900°F (1,040°C) and quenching in water or rapid cooling by other means.

(02) DT-12 SURFACE CONDITION

The internal and external surfaces of fittings and process components furnished to this Standard may be finished using any combination of mechanical polishing,

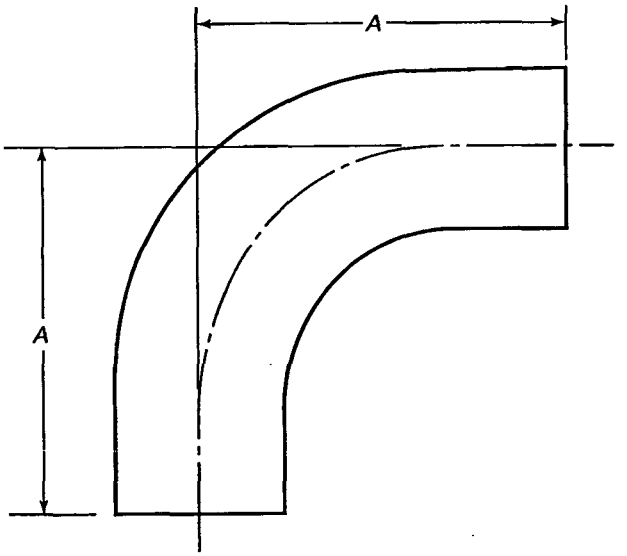

(02) **TABLE DT-7 AUTOMATIC TUBE WELD: 90 deg ELBOW**

	A	
Nominal Size, in.	in.	mm
1/4	2.625	66.7
3/8	2.625	66.7
1/2	3.000	76.2
3/4	3.000	76.2
1	3.000	76.2
1 1/2	3.750	95.3
2	4.750	120.7
2 1/2	5.500	139.7
3	6.250	158.8
4	8.000	203.2
6	11.500	292.1

chemical polishing, and electropolishing at the request of the purchaser, conforming with Part SF. Internal and external surfaces of fittings and process components furnished to this Standard shall be cleaned to remove oils, grease, particulates, and grinding compounds or electrolytes.

DT-13 PACKAGING (02)

All end connections of fittings or process components shall be protected with end caps. Additionally, for fittings, they shall be sealed in transparent bags or shrink wrapped. Additional packaging for process components, other than fittings, shall be as agreed to by the purchaser and manufacturer.

Copyright ASME International
Provided by IHS under license with ASME
No reproduction or networking permitted without license from IHS
Not for Resale

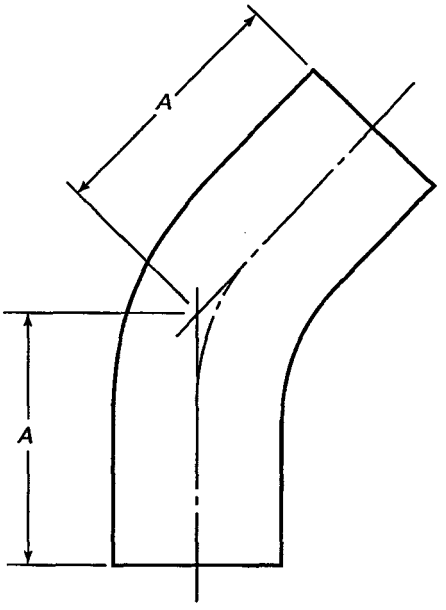

(02) **TABLE DT-8 AUTOMATIC TUBE WELD: 45 deg ELBOW**

	A	
Nominal Size, in.	in.	mm
1/4	2.000	50.8
3/8	2.000	50.8
1/2	2.250	57.2
3/4	2.250	57.2
1	2.250	57.2
1 1/2	2.500	63.5
2	3.000	76.2
2 1/2	3.375	85.7
3	3.625	92.1
4	4.500	114.3
6	6.250	158.8

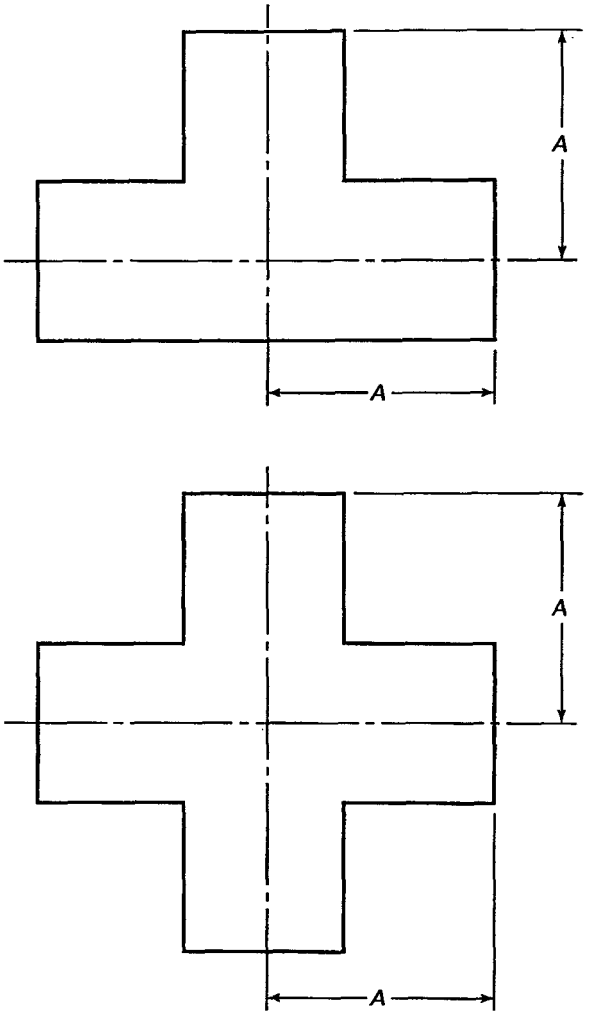

TABLE DT-9 AUTOMATIC TUBE WELD: STRAIGHT TEE AND CROSS (02)

	A	
Nominal Size, in.	in.	mm
1/4	1.750	44.5
3/8	1.750	44.5
1/2	1.875	47.6
3/4	2.000	50.8
1	2.125	54.0
1 1/2	2.375	60.3
2	2.875	73.0
2 1/2	3.125	79.4
3	3.375	85.7
4	4.125	104.8
6	5.625	142.9

Copyright ASME International
Provided by IHS under license with ASME
No reproduction or networking permitted without license from IHS
Not for Resale

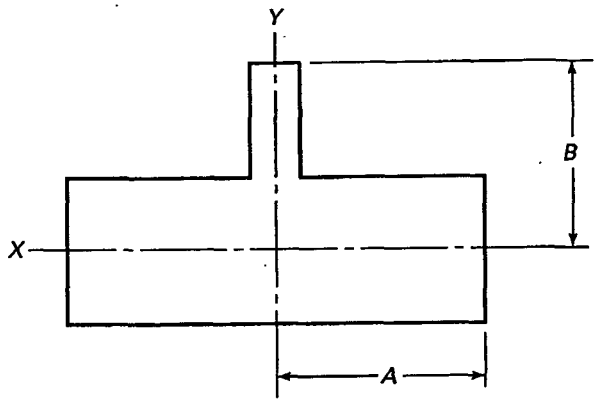

(02) **TABLE DT-10 AUTOMATIC TUBE WELD: REDUCING TEE**

Nominal Size, in.		A		B	
X	Y	in.	mm	in.	mm
3/8	1/4	1.750	44.5	1.750	44.5
1/2	1/4	1.875	47.6	1.875	47.6
1/2	3/8	1.875	47.6	1.875	47.6
3/4	1/4	2.000	50.8	2.000	50.8
3/4	3/8	2.000	50.8	2.000	50.8
3/4	1/2	2.000	50.8	2.000	50.8
1	1/4	2.125	54.0	2.125	54.0
1	3/8	2.125	54.0	2.125	54.0
1	1/2	2.125	54.0	2.125	54.0
1	3/4	2.125	54.0	2.125	54.0
1 1/2	1/2	2.375	60.3	2.375	60.3
1 1/2	3/4	2.375	60.3	2.375	60.3
1 1/2	1	2.375	60.3	2.375	60.3
2	1/2	2.875	73.0	2.625	66.7
2	3/4	2.875	73.0	2.625	66.7
2	1	2.875	73.0	2.625	66.7
2	1 1/2	2.875	73.0	2.625	66.7
2 1/2	1/2	3.125	79.4	2.875	73.0
2 1/2	3/4	3.125	79.4	2.875	73.0
2 1/2	1	3.125	79.4	2.875	73.0
2 1/2	1 1/2	3.125	79.4	2.875	73.0
2 1/2	2	3.125	79.4	2.875	73.0
3	1/2	3.375	85.7	3.125	79.4
3	3/4	3.375	85.7	3.125	79.4
3	1	3.375	85.7	3.125	79.4
3	1 1/2	3.375	85.7	3.125	79.4
3	2	3.375	85.7	3.125	79.4
3	2 1/2	3.375	85.7	3.125	79.4
4	1/2	4.125	104.8	3.625	92.1
4	3/4	4.125	104.8	3.625	92.1
4	1	4.125	104.8	3.625	92.1
4	1 1/2	4.125	104.8	3.625	92.1
4	2	4.125	104.8	3.875	98.4
4	2 1/2	4.125	104.8	3.875	98.4
4	3	4.125	104.8	3.875	98.4
6	4	5.625	142.9	5.125	130.2

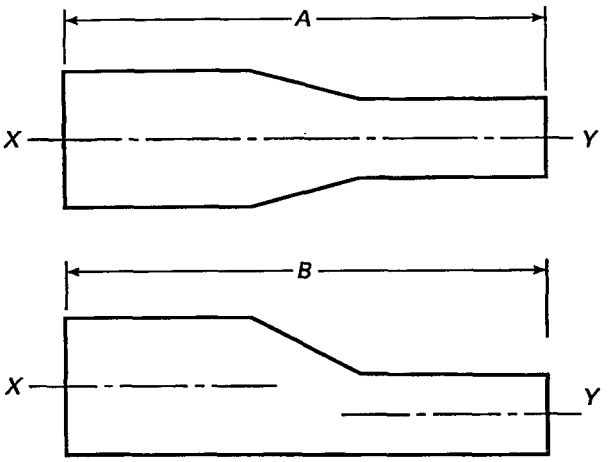

TABLE DT-11 AUTOMATIC TUBE WELD: CONCENTRIC AND ECCENTRIC REDUCER (02)

Nominal Size, in.		A		B	
X	Y	in.	mm	in.	mm
3/8	1/4	3.250	82.6	4.000	101.6
1/2	1/4	3.250	82.6	4.000	101.6
1/2	3/8	3.250	82.6	4.000	101.6
3/4	1/4	3.250	82.6	4.000	101.6
3/4	3/8	3.250	82.6	4.000	101.6
3/4	1/2	4.000	101.6	4.000	101.6
1	1/4	4.500	114.3	4.500	114.3
1	3/8	4.500	114.3	4.500	114.3
1	1/2	4.500	114.3	4.500	114.3
1	3/4	4.000	101.6	4.000	101.6
1 1/2	1/2	5.500	139.7	5.500	139.7
1 1/2	3/4	5.000	127.0	5.000	127.0
1 1/2	1	5.000	127.0	5.000	127.0
2	1/2	7.750	196.9	7.750	196.9
2	3/4	7.250	184.2	7.250	184.2
2	1	7.250	184.2	7.250	184.2
2	1 1/2	5.250	133.4	5.250	133.4
2 1/2	1/2	9.750	247.7	9.750	247.7
2 1/2	3/4	9.250	235.0	9.250	235.0
2 1/2	1	9.250	235.0	9.250	235.0
2 1/2	1 1/2	7.250	184.2	7.250	184.2
2 1/2	2	5.500	139.7	5.500	139.7
3	1	11.250	285.8	11.250	285.8
3	1 1/2	9.250	235.0	9.250	235.0
3	2	7.500	190.5	7.500	190.5
3	2 1/2	5.500	139.7	5.500	139.7
4	1	15.500	393.7	15.500	393.7
4	1 1/2	13.500	342.9	13.500	342.9
4	2	11.750	298.5	11.750	298.5
4	2 1/2	9.750	247.7	9.750	247.7
4	3	7.750	196.9	7.750	196.9
6	4	10.000	254.0	10.000	254.0

Copyright ASME International
Provided by IHS under license with ASME
No reproduction or networking permitted without license from IHS
Not for Resale

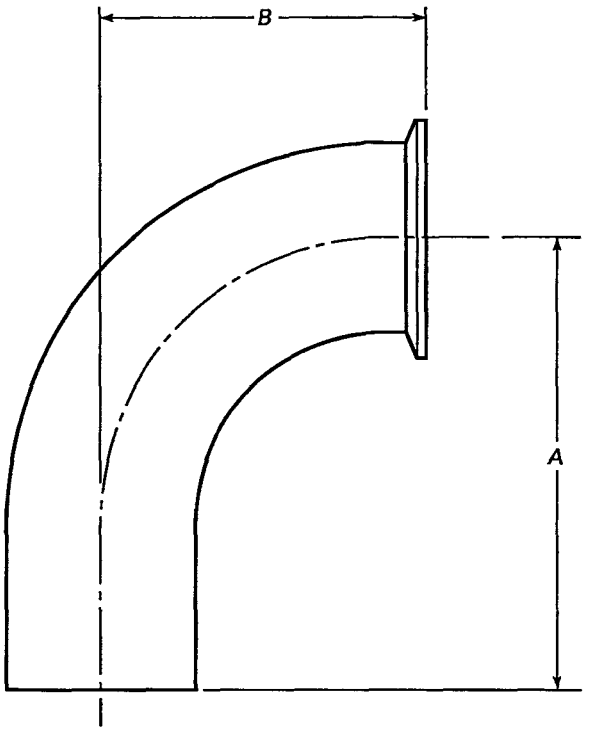

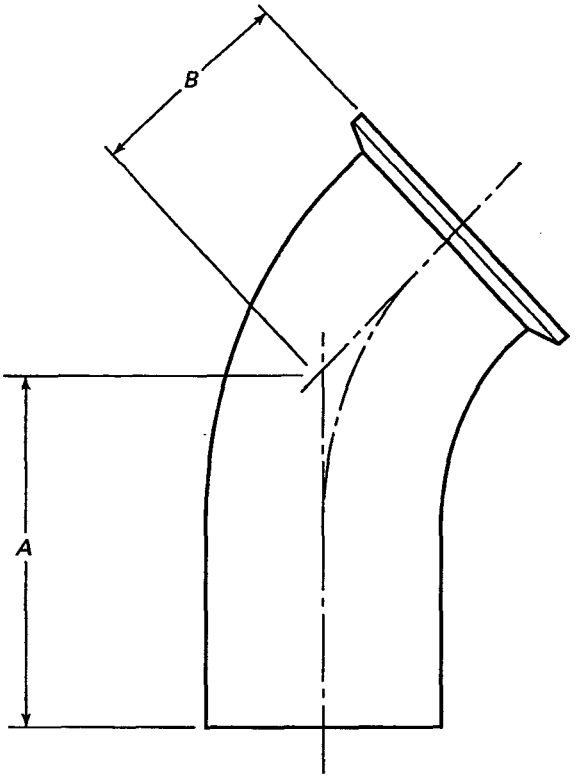

(02) **TABLE DT-12 AUTOMATIC TUBE WELD: HYGIENIC CLAMP JOINT, 90 deg ELBOW**

Nominal Size, in.	A		B	
	in.	mm	in.	mm
1/4	2.625	66.7	1.625	41.3
3/8	2.625	66.7	1.625	41.3
1/2	3.000	76.2	1.625	41.3
3/4	3.000	76.2	1.625	41.3
1	3.000	76.2	2.000	50.8
1 1/2	3.750	95.3	2.750	69.9
2	4.750	120.7	3.500	88.9
2 1/2	5.500	139.7	4.250	108.0
3	6.250	158.8	5.000	127.0
4	8.000	203.2	6.625	168.3
6	11.500	292.1	10.500	266.7

TABLE DT-13 AUTOMATIC TUBE WELD: HYGIENIC CLAMP JOINT, 45 deg ELBOW (02)

Nominal Size, in.	A		B	
	in.	mm	in.	mm
1/4	2.000	50.8	1.000	25.4
3/8	2.000	50.8	1.000	25.4
1/2	2.250	57.2	1.000	25.4
3/4	2.250	57.2	1.000	25.4
1	2.250	57.2	1.125	28.6
1 1/2	2.500	63.5	1.438	36.5
2	3.000	76.2	1.750	44.5
2 1/2	3.375	85.7	2.063	52.4
3	3.625	92.1	2.375	60.3
4	4.500	114.3	3.125	79.4
6	6.250	158.8	5.250	133.4

Copyright ASME International
Provided by IHS under license with ASME
No reproduction or networking permitted without license from IHS
Not for Resale

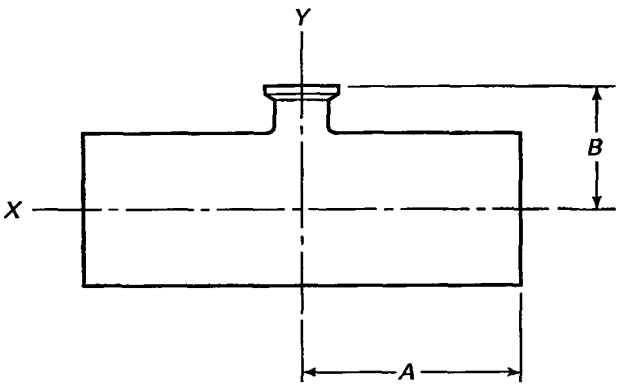

(02) **TABLE DT-14 AUTOMATIC TUBE WELD: SHORT OUTLET HYGIENIC CLAMP JOINT REDUCING TEE**

Nominal Size, in.		A		B	
X	Y	in.	mm	in.	mm
3/8	1/4	1.750	44.5	1.000	25.4
1/2	1/4	1.875	47.6	1.000	25.4
1/2	3/8	1.875	47.6	1.000	25.4
3/4	1/4	2.000	50.8	1.000	25.4
3/4	3/8	2.000	50.8	1.000	25.4
3/4	1/2	2.000	50.8	1.000	25.4
1	1/4	2.125	54.0	1.125	28.6
1	3/8	2.125	54.0	1.125	28.6
1	1/2	2.125	54.0	1.125	28.6
1	3/4	2.125	54.0	1.125	28.6
1 1/2	1/2	2.375	60.3	1.375	34.9
1 1/2	3/4	2.375	60.3	1.375	34.9
1 1/2	1	2.375	60.3	1.375	34.9
2	1/2	2.875	73.0	1.625	41.3
2	3/4	2.875	73.0	1.625	41.3
2	1	2.875	73.0	1.625	41.3
2	1 1/2	2.875	73.0	1.625	41.3
2 1/2	1/2	3.125	79.4	1.875	47.6
2 1/2	3/4	3.125	79.4	1.875	47.6
2 1/2	1	3.125	79.4	1.875	47.6
2 1/2	1 1/2	3.125	79.4	1.875	47.6
2 1/2	2	3.125	79.4	1.875	47.6
3	1/2	3.375	85.7	2.125	54.0
3	3/4	3.375	85.7	2.125	54.0
3	1	3.375	85.7	2.125	54.0
3	1 1/2	3.375	85.7	2.125	54.0
3	2	3.375	85.7	2.125	54.0
3	2 1/2	3.375	85.7	2.125	54.0
4	1/2	4.125	104.8	2.625	66.7
4	3/4	4.125	104.8	2.625	66.7
4	1	4.125	104.8	2.625	66.7
4	1 1/2	4.125	104.8	2.625	66.7
4	2	4.125	104.8	2.625	66.7
4	2 1/2	4.125	104.8	2.625	66.7
4	3	4.125	104.8	2.625	66.7
6	4	5.625	142.9	3.750	95.3

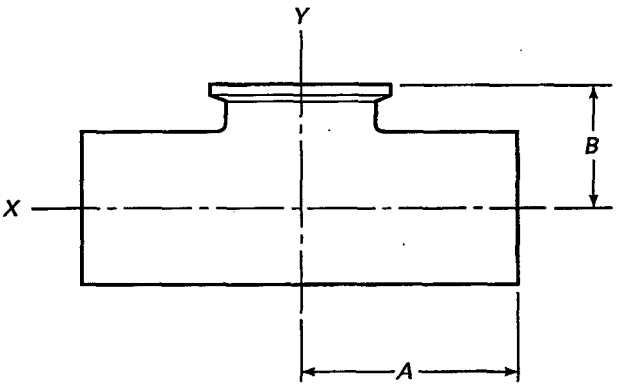

TABLE DT-15 AUTOMATIC TUBE WELD: SHORT OUTLET HYGIENIC CLAMP JOINT TEE (02)

Nominal Size, in.	A		B	
	in.	mm	in.	mm
1/4	1.750	44.5	1.000	25.4
3/8	1.750	44.5	1.000	25.4
1/2	1.875	47.6	1.000	25.4
3/4	2.000	50.8	1.125	28.6
1	2.125	54.0	1.125	28.6
1 1/2	2.375	60.3	1.375	34.9
2	2.875	73.0	1.625	41.3
2 1/2	3.125	79.4	1.875	47.6
3	3.375	85.7	2.125	54.0
4	4.125	104.8	2.750	69.9
6	5.625	142.9	4.625	117.5

Copyright ASME International
Provided by IHS under license with ASME
No reproduction or networking permitted without license from IHS
Not for Resale

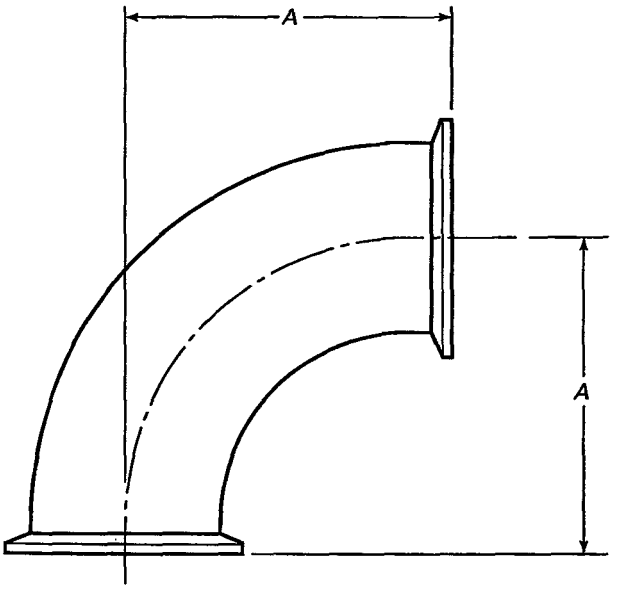

(02) **TABLE DT-16 HYGIENIC CLAMP JOINT: 90 deg ELBOW**

	A	
Nominal Size, in.	in.	mm
1/4	1.625	41.3
3/8	1.625	41.3
1/2	1.625	41.3
3/4	1.625	41.3
1	2.000	50.8
1 1/2	2.750	69.9
2	3.500	88.9
2 1/2	4.250	108.0
3	5.000	127.0
4	6.625	168.3
6	10.500	266.7

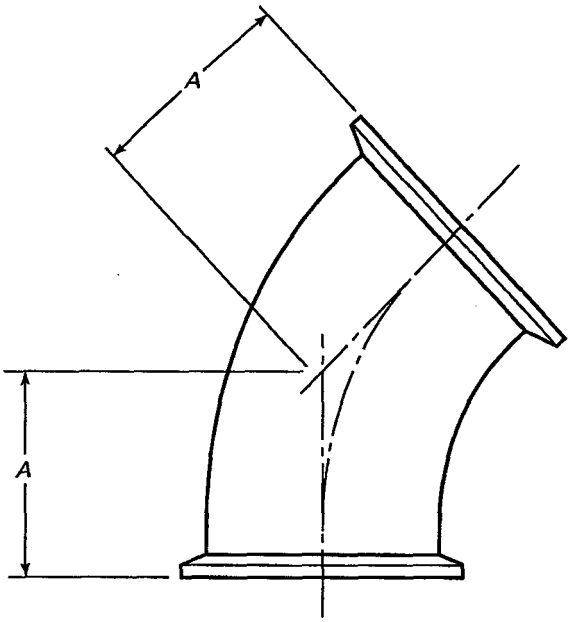

TABLE DT-17 HYGIENIC CLAMP JOINT: 45 deg ELBOW (02)

	A	
Nominal Size, in.	in.	mm
1/4	1.000	25.4
3/8	1.000	25.4
1/2	1.000	25.4
3/4	1.000	25.4
1	1.125	28.6
1 1/2	1.483	36.5
2	1.750	44.5
2 1/2	2.063	52.4
3	2.375	60.3
4	3.125	79.4
6	5.250	133.4

Copyright ASME International
Provided by IHS under license with ASME
No reproduction or networking permitted without license from IHS
Not for Resale

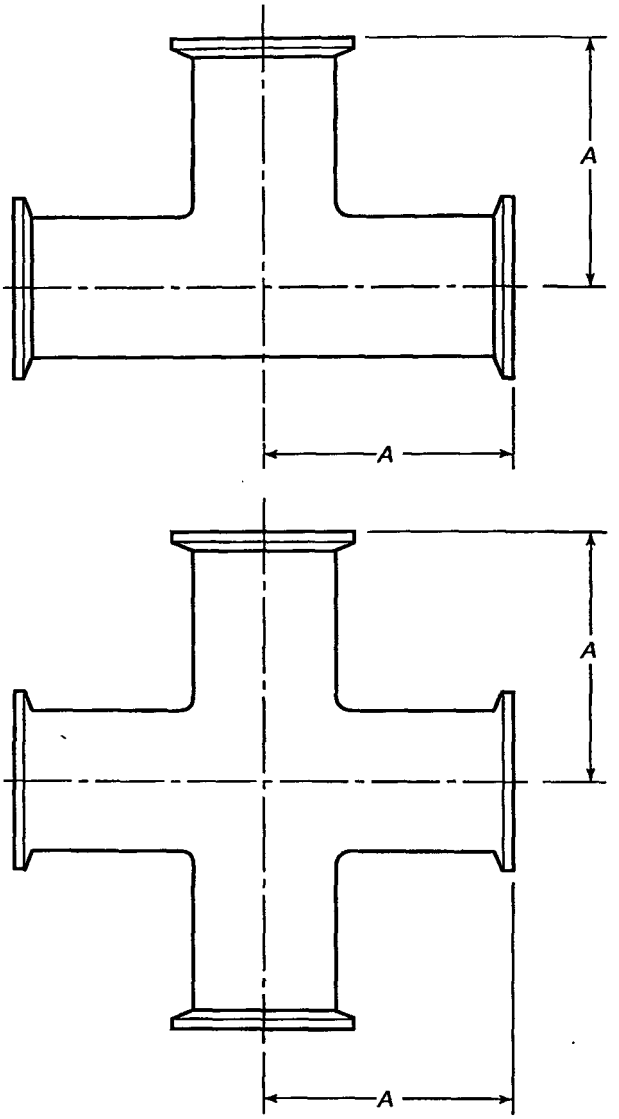

(02) **TABLE DT-18 HYGIENIC CLAMP JOINT: STRAIGHT TEE AND CROSS**

Nominal Size, in.	A	
	in.	mm
1/4	2.250	57.2
3/8	2.250	57.2
1/2	2.250	57.2
3/4	2.375	60.3
1	2.625	66.7
1 1/2	2.875	73.0
2	3.375	85.7
2 1/2	3.625	92.1
3	3.875	98.4
4	4.750	120.7
6	7.125	181.0

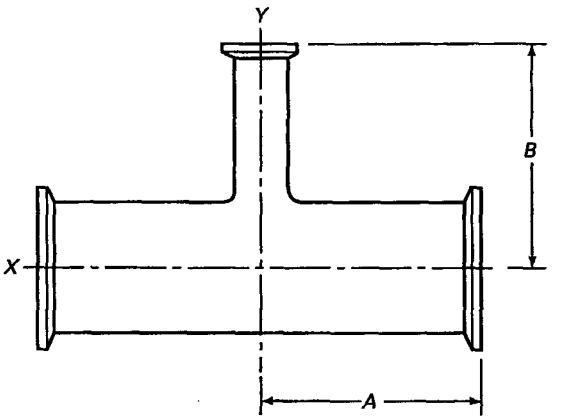

TABLE DT-19 HYGIENIC CLAMP JOINT: REDUCING TEE (02)

Nominal Size, in.		A		B	
X	Y	in.	mm	in.	mm
3/8	1/4	2.250	57.2	2.250	57.2
1/2	1/4	2.375	60.3	2.375	60.3
1/2	3/8	2.375	60.3	2.375	60.3
3/4	1/4	2.500	63.5	2.500	63.5
3/4	3/8	2.500	63.5	2.500	63.5
3/4	1/2	2.500	63.5	2.500	63.5
1	1/4	2.625	66.7	2.625	66.7
1	3/8	2.625	66.7	2.625	66.7
1	1/2	2.625	66.7	2.625	66.7
1	3/4	2.625	66.7	2.625	66.7
1 1/2	1/2	2.875	73.0	2.875	73.0
1 1/2	3/4	2.875	73.0	2.875	73.0
1 1/2	1	2.875	73.0	2.875	73.0
2	1/2	3.375	85.7	3.125	79.4
2	3/4	3.375	85.7	3.125	79.4
2	1	3.375	85.7	3.125	79.4
2	1 1/2	3.375	85.7	3.125	79.4
2 1/2	1/2	3.625	92.1	3.375	85.7
2 1/2	3/4	3.625	92.1	3.375	85.7
2 1/2	1	3.625	92.1	3.375	85.7
2 1/2	1 1/2	3.625	92.1	3.375	85.7
2 1/2	2	3.625	92.1	3.375	85.7
3	1/2	3.875	98.4	3.625	92.1
3	3/4	3.875	98.4	3.625	92.1
3	1	3.875	98.4	3.625	92.1
3	1 1/2	3.875	98.4	3.625	92.1
3	2	3.875	98.4	3.875	98.4
3	2 1/2	3.875	98.4	3.875	98.4
4	1/2	4.750	120.7	4.125	104.8
4	3/4	4.750	120.7	4.125	104.8
4	1	4.750	120.7	4.125	104.8
4	1 1/2	4.750	120.7	4.125	104.8
4	2	4.750	120.7	4.375	111.1
4	2 1/2	4.750	120.7	4.375	111.1
4	3	4.750	120.7	4.375	111.1
6	4	7.125	181.0	5.750	146.1

Copyright ASME International
Provided by IHS under license with ASME
No reproduction or networking permitted without license from IHS
Not for Resale

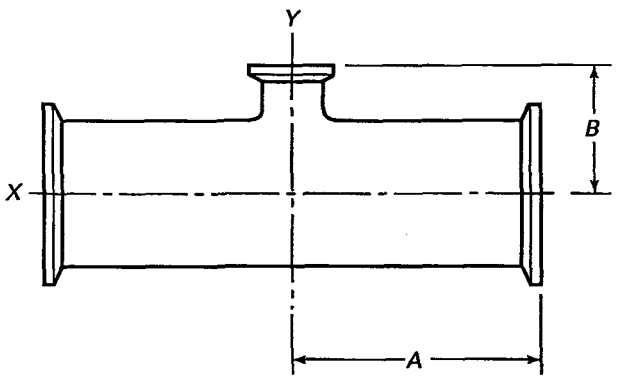

(02) **TABLE DT-20 HYGIENIC CLAMP JOINT: SHORT OUTLET REDUCING TEE**

Nominal Size, in.		A		B	
X	Y	in.	mm	in.	mm
3/8	1/4	2.250	57.2	1.000	25.4
1/2	1/4	2.375	60.3	1.000	25.4
1/2	3/8	2.375	60.3	1.000	25.4
3/4	1/4	2.500	63.5	1.000	25.4
3/4	3/8	2.500	63.5	1.000	25.4
3/4	1/2	2.500	63.5	1.000	25.4
1	1/4	2.625	66.7	1.125	28.6
1	3/8	2.625	66.7	1.125	28.6
1	1/2	2.625	66.7	1.125	28.6
1	3/4	2.625	66.7	1.125	28.6
1 1/2	1/2	2.875	73.0	1.375	34.9
1 1/2	3/4	2.875	73.0	1.375	34.9
1 1/2	1	2.875	73.0	1.375	34.9
2	1/2	3.375	85.7	1.625	41.3
2	3/4	3.375	85.7	1.625	41.3
2	1	3.375	85.7	1.625	41.3
2	1 1/2	3.375	85.7	1.625	41.3
2 1/2	1/2	3.625	92.1	1.875	47.6
2 1/2	3/4	3.625	92.1	1.875	47.6
2 1/2	1	3.625	92.1	1.875	47.6
2 1/2	1 1/2	3.625	92.1	1.875	47.6
2 1/2	2	3.625	92.1	1.875	47.6
3	1/2	3.875	98.4	2.125	54.0
3	3/4	3.875	98.4	2.125	54.0
3	1	3.875	98.4	2.125	54.0
3	1 1/2	3.875	98.4	2.125	54.0
3	2	3.875	98.4	2.125	54.0
3	2 1/2	3.875	98.4	2.125	54.0
4	1/2	4.750	120.7	2.625	66.7
4	3/4	4.750	120.7	2.625	66.7
4	1	4.750	120.7	2.625	66.7
4	1 1/2	4.750	120.7	2.625	66.7
4	2	4.750	120.7	2.625	66.7
4	2 1/2	4.750	120.7	2.625	66.7
4	3	4.750	120.7	2.625	66.7
6	4	7.125	181.0	3.750	95.3

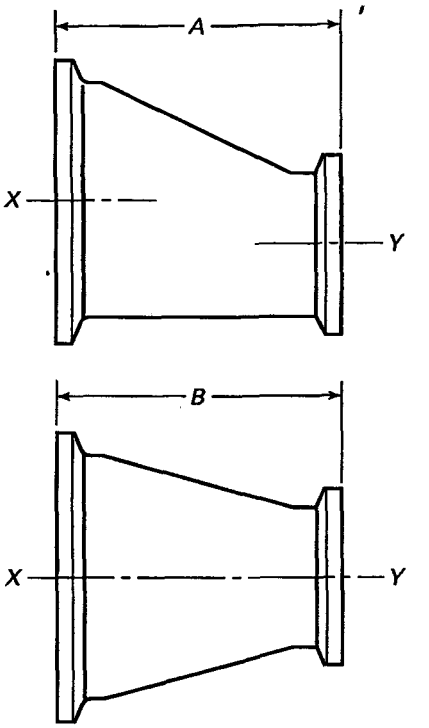

TABLE DT-21 HYGIENIC CLAMP JOINT: CONCENTRIC AND ECCENTRIC REDUCER (02)

Nominal Size, in.		A		B	
X	Y	in.	mm	in.	mm
3/4	1/2	2.000	50.8	2.000	50.8
1	1/2	2.500	63.5	2.500	63.5
1	3/4	2.000	50.8	2.000	50.8
1 1/2	1/2	3.500	88.9	3.500	88.9
1 1/2	3/4	3.000	76.2	3.000	76.2
1 1/2	1	3.000	76.2	3.000	76.2
2	1/2	5.500	139.7	5.500	139.7
2	3/4	5.000	127.0	5.000	127.0
2	1	5.000	127.0	5.000	127.0
2	1 1/2	3.000	76.2	3.000	76.2
2 1/2	1/2	7.500	190.5	7.500	190.5
2 1/2	3/4	7.000	177.8	7.000	177.8
2 1/2	1	7.000	177.8	7.000	177.8
2 1/2	1 1/2	5.000	127.0	5.000	127.0
2 1/2	2	3.000	76.2	3.000	76.2
3	1	9.000	228.6	9.000	228.6
3	1 1/2	7.000	177.8	7.000	177.8
3	2	5.000	127.0	5.000	127.0
3	2 1/2	3.000	76.2	3.000	76.2
4	1	13.125	333.4	13.125	333.4
4	1 1/2	11.125	282.6	11.125	282.6
4	2	9.125	231.8	9.125	231.8
4	2 1/2	7.125	181.0	7.125	181.0
4	3	5.125	130.2	5.125	130.2
6	4	7.625	193.7	7.625	193.7

Copyright ASME International
Provided by IHS under license with ASME
No reproduction or networking permitted without license from IHS
Not for Resale

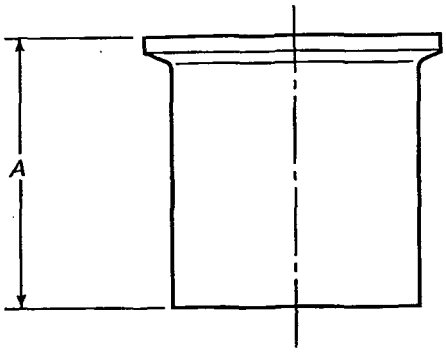

(02) **TABLE DT-22 AUTOMATIC TUBE WELD: FERRULE**

	A	
Nominal Size, in.	in.	mm
1/4	1.750	44.5
3/8	1.750	44.5
1/2	1.750	44.5
3/4	1.750	44.5
1	1.750	44.5
1 1/2	1.750	44.5
2	2.250	57.2
2 1/2	2.250	57.2
3	2.250	57.2
4	2.250	57.2
6	3.000	76.2

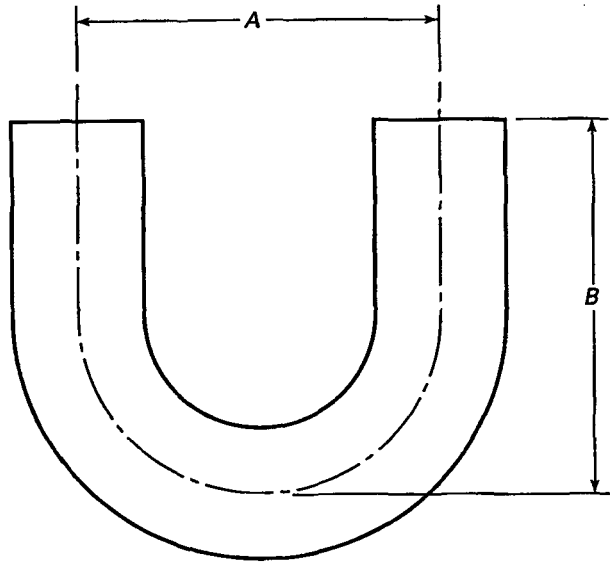

TABLE DT-23 AUTOMATIC TUBE WELD: 180 deg RETURN BEND (02)

Nominal Size, in.	A		B	
	in.	mm	in.	mm
1/4	4.500	114.3	2.625	66.7
3/8	4.500	114.3	2.625	66.7
1/2	4.500	114.3	3.000	76.2
3/4	4.500	114.3	3.000	76.2
1	4.500	114.3	3.000	76.2
1 1/2	6.000	152.4	4.500	114.3
2	6.000	152.4	5.000	127.0
2 1/2	7.500	190.5	5.750	146.1
3	9.000	228.6	6.500	165.1
4	12.000	304.8	8.500	215.9
6	18.000	457.2	11.500	292.1

Copyright ASME International
Provided by IHS under license with ASME
No reproduction or networking permitted without license from IHS
Not for Resale

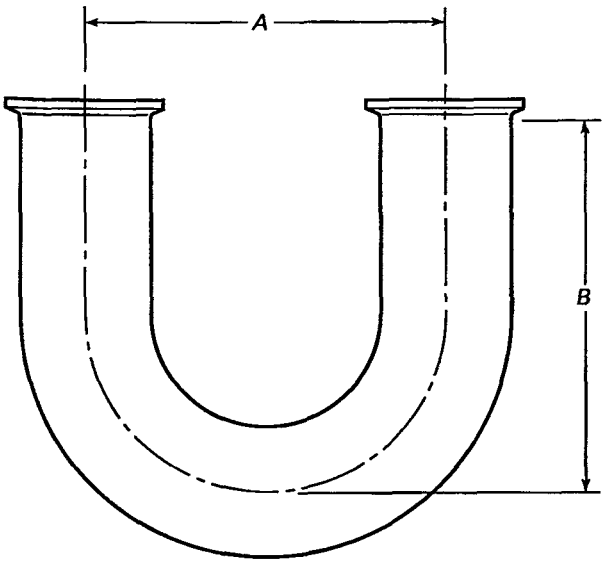

(02) **TABLE DT-24 HYGIENIC CLAMP JOINT: 180 deg RETURN BEND**

Nominal Size, in.	A		B	
	in.	mm	in.	mm
1/4	4.500	114.3	3.125	79.4
3/8	4.500	114.3	3.125	79.4
1/2	4.500	114.3	3.500	88.9
3/4	4.500	114.3	3.500	88.9
1	4.500	114.3	3.500	88.9
1 1/2	6.000	152.4	5.000	127.0
2	6.000	152.4	5.500	139.7
2 1/2	7.500	190.5	6.500	165.1
3	9.000	228.6	7.000	177.8
4	12.000	304.8	9.125	231.8
6	18.000	457.2	13.000	330.2

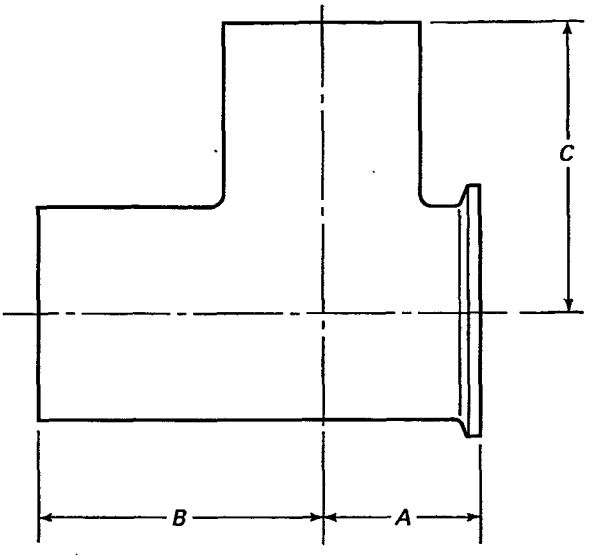

TABLE DT-25 HYGIENIC MECHANICAL JOINT: SHORT OUTLET RUN TEE (02)

Nominal Size, in.	A		B		C	
	in.	mm	in.	mm	in.	mm
1/4	0.875	22.2	1.750	44.5	1.750	44.5
3/8	0.875	22.2	1.750	44.5	1.750	44.5
1/2	0.875	22.2	1.875	47.6	1.875	47.6
3/4	1.000	25.4	2.000	50.8	2.000	50.8
1	1.125	28.6	2.125	54.0	2.125	54.0
1 1/2	1.375	34.9	2.375	60.3	2.375	60.3
2	1.625	41.3	2.875	73.0	2.875	73.0
2 1/2	1.875	47.6	3.125	79.4	3.125	79.4
3	2.125	54.0	3.375	85.7	3.375	85.7
4	2.750	69.9	4.125	104.8	4.125	104.8
6	4.625	117.5	5.625	142.9	5.625	142.9

Copyright ASME International
Provided by IHS under license with ASME
No reproduction or networking permitted without license from IHS
Not for Resale

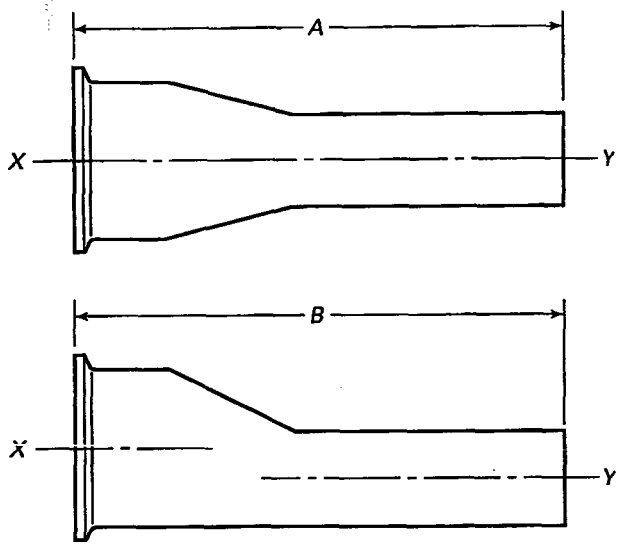

(02) **TABLE DT-26 HYGIENIC CLAMP JOINT: TUBE WELD CONCENTRIC AND ECCENTRIC REDUCER**

Nominal Size, in.		A		B	
X	Y	in.	mm	in.	mm
¾	½	3.000	76.2	3.000	76.2
1	½	3.500	88.9	3.500	88.9
1	¾	3.000	76.2	3.000	76.2
1½	½	4.500	114.3	4.500	114.3
1½	¾	4.000	101.6	4.000	101.6
1½	1	4.000	101.6	4.000	101.6
2	½	6.500	165.1	6.500	165.1
2	¾	6.000	152.4	6.000	152.4
2	1	6.000	152.4	6.000	152.4
2	1½	4.000	101.6	4.000	101.6
2½	½	8.500	215.9	8.500	215.9
2½	¾	8.000	203.2	8.000	203.2
2½	1	8.000	203.2	8.000	203.2
2½	1½	6.000	152.4	6.000	152.4
2½	2	4.250	107.9	4.250	108.0
3	1	10.000	254.0	10.000	254.0
3	1½	8.000	203.2	8.000	203.2
3	2	6.250	158.8	6.250	158.8
3	2½	4.250	108.0	4.250	108.0
4	1	14.125	358.8	14.125	358.8
4	1½	12.125	308.0	12.125	308.0
4	2	10.375	263.5	10.375	263.5
4	2½	8.375	212.7	8.375	212.7
4	3	6.375	161.9	6.375	161.9
6	4	9.000	228.6	9.000	228.6

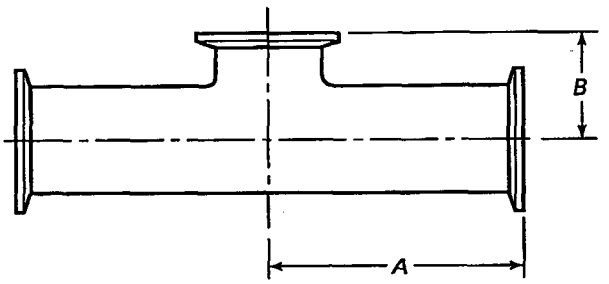

TABLE DT-27 HYGIENIC CLAMP JOINT: SHORT OUTLET TEE (02)

Nominal Size, in.	A		B	
	in.	mm	in.	mm
½	2.250	57.2	1.000	25.4
¾	2.375	60.3	1.125	28.6
1	2.625	66.7	1.125	28.6
1½	2.875	73.0	1.375	34.9
2	3.375	85.7	1.625	41.3
2½	3.625	92.1	1.875	47.6
3	3.875	98.4	2.125	54.0
4	4.750	120.7	2.750	69.9
6	7.125	181.0	4.625	117.5

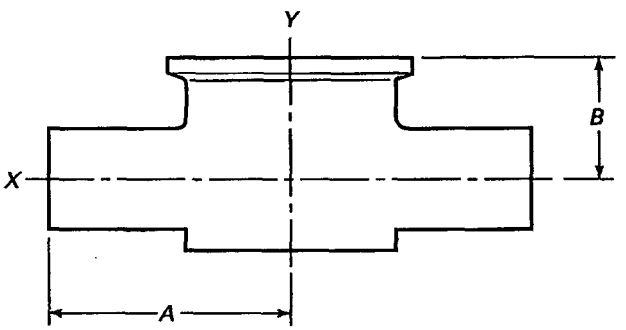

TABLE DT-28 AUTOMATIC TUBE WELD: INSTRUMENT TEE (02)

Nominal Size, in.			A		B	
X		Y	in.	mm	in.	mm
½	×	1½	2.500	63.5	0.875	22.2
¾	×	1½	2.500	63.5	1.000	25.4
1	×	1½	2.500	63.5	1.125	28.6
½	×	2	2.750	69.9	1.000	25.4
¾	×	2	2.750	69.9	1.125	28.6
1	×	2	2.750	69.9	1.250	31.8
1½	×	2	2.750	69.9	1.500	38.1

Copyright ASME International
Provided by IHS under license with ASME
No reproduction or networking permitted without license from IHS
Not for Resale

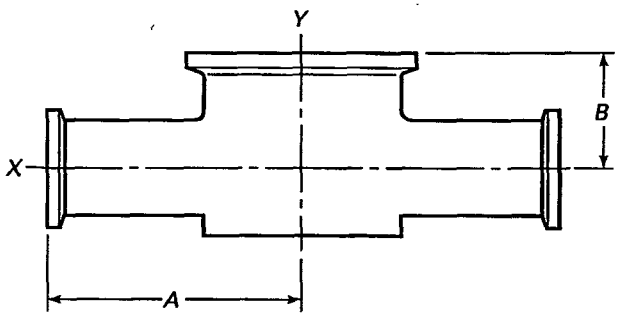

(02) **TABLE DT-29 HYGIENIC CLAMP JOINT: INSTRUMENT TEE**

Nominal Size, in.			A		B	
X		Y	in.	mm	in.	mm
½	×	1½	3.000	76.2	0.875	22.2
¾	×	1½	3.000	76.2	1.000	25.4
1	×	1½	3.000	76.2	1.125	28.6
½	×	2	3.250	82.6	1.000	25.4
¾	×	2	3.250	82.6	1.125	28.6
1	×	2	3.250	82.6	1.250	31.8
1½	×	2	3.250	82.6	1.500	38.1

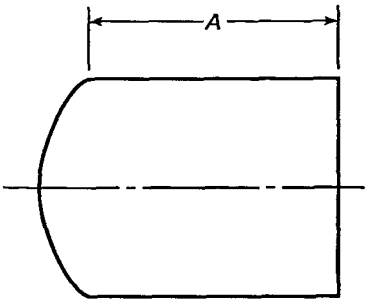

TABLE DT-30 AUTOMATIC TUBE WELD: CAP (02)

	A, Min. [Note (1)]	
Nominal Size, in.	in.	mm
½	1.500	38.1
¾	1.500	38.1
1	1.500	38.1
1½	1.500	38.1
2	1.500	38.1
2½	1.500	38.1
3	1.750	44.5
4	2.000	50.8
6	2.500	63.5

NOTE:
(1) Per DT-4, minimum tangent length.

Copyright ASME International
Provided by IHS under license with ASME
No reproduction or networking permitted without license from IHS
Not for Resale

PART MJ
MATERIAL JOINING

MJ-1 SCOPE

The requirements of this Part are applicable to the joining of bioprocessing equipment including pressure vessels and tanks [which includes heat exchangers, atmospheric tanks, pumps, and any vessels designed and built to the ASME Boiler and Pressure Vessel Code (BPVC), Section VIII, Division 1], piping (built to ASME B31.3), tubing, and fittings, and shall be used in conjunction with the requirements of ASME BPVC, Sections VIII and IX, and ASME B31.3, as applicable. These materials, joining methods, examinations, etc., are limited to process systems that contact bioprocessing products or product-process streams.

MJ-2 MATERIALS

MJ-2.1 Stainless Steels

Material for process surfaces shall conform to AISI 316L (UNS S31603) and a published ASTM or other recognized specification, unless otherwise agreed to by the purchaser and supplier. All materials (tubing and fittings) shall conform with Table DT-3. Material for supporting structures shall conform to AISI 304 or 304L (UNS S30400 or S30403) unless otherwise agreed to by the purchaser and supplier.

MJ-2.2 Nickel Alloys

The use of nickel alloys shall be subject to agreement by the purchaser and supplier. The alloy shall conform to a published ASTM or other recognized specification. It is recommended that weld and finish samples be made from the actual heat or lot of material in question, in order to guarantee the desired results.

MJ-2.3 Mechanically Polished Material

Mechanically polished material shall be ready for welding, i.e., free of grit and residues. Polished material shall meet the dimensional tolerances of the applicable specifications, and the surface finish requirements of this Standard, after polishing has been completed.

MJ-2.4 Electropolished Material

Electropolished material shall be ready for welding and shall be free of chemical residues and water stains. Surfaces shall meet the surface finish requirements of Part SF for stainless steel or higher alloys.

MJ-2.5 Other Materials

Other materials (for example, titanium, tantalum, thermoplastic, and glass) may be used, based upon agreement by owner/user and contractor.

MJ-2.6 Weld and Finish Samples (02)

Weld and finish samples, when required, shall be made from the same material specification and grade to be used in production in order to demonstrate the desired results.

MJ-3 JOINING PROCESSES AND PROCEDURES

MJ-3.1 Welds Finished After Welding

For pressure vessels, tanks, and piping and tubing systems where the process-contact surface of the weld is to be finished after welding, the welding processes used shall be limited to the arc or high energy beam (electron beam and laser beam) processes as defined in ANSI/AWS A3.0. All welding procedures must be qualified per MJ-8 of this Standard. The owner/user and contractor shall agree that the welding process selected will provide the desired results.

MJ-3.2 Welds Used in the As-Welded Condition

For pressure vessels, tanks, and piping and tubing systems where the process-contact surface of the weld is to be used as is, welding processes shall be limited to the inert-gas arc processes (such as gas tungsten-arc welding and plasma arc welding) or the high energy beam processes (such as electron beam or laser beam welding), as defined in ANSI/AWS A3.0. All welding

Copyright ASME International
Provided by IHS under license with ASME
No reproduction or networking permitted without license from IHS
Not for Resale

procedures must be qualified per MJ-8 of this Standard. Every effort shall be made to use an automatic or machine welding process. Autogenous welds, welds with filler wire, or consumable inserts are acceptable for this Standard provided they meet the requirements for all applicable codes. The owner/user and contractor shall agree that the welding process selected will provide the desired results.

MJ-3.3 Nonmetallics

Joining of nonmetallic materials (e.g., glass, rubber, ceramics, and plastics) shall be in accordance with procedures and processes recommended by the material manufacturer, and approved by the owner/user, using materials or compounds that are inert to the intended service.

MJ-3.4 Mechanical Connections

Mechanical connections shall conform to SD-3.7.

MJ-4 WELD JOINT DESIGN AND PREPARATION

MJ-4.1 General

All process surface joints shall have complete weld penetration, whether welded from one side or from both sides. The joint must allow for proper purge gas coverage on the process side. Socket welds are not permitted in the process stream or where CIP and SIP requirements are defined.

MJ-4.2 Pressure Vessels and Tanks

Joint designs shall be those permitted by ASME BPVC, Section VIII, and shall comply with MJ-4.1.

MJ-4.3 Piping

Joint designs shall be those permitted by ASME B31.3, and shall comply with MJ-4.1.

MJ-4.4 Tubing

Joint designs for hygienic tubing and fittings shall be square butt joints. The tubing and fittings shall have ends prepared by machining or facing to provide a square end that meets the requirements of Tables DT-5 and DT-6. The butt weld joints shall be properly cleaned within $\frac{1}{2}$ in. of the joint area on the inside and outside surfaces prior to welding. Welding on tubing shall be done using automatic (or machine) welding techniques (such as orbital tube welding or lathe welding), except where size or space will not permit. In that case, manual welding can be performed, but must be agreed to by the owner/user and contractor.

MJ-5 FILLER MATERIAL

Filler material shall conform to a published AWS specification, or to a proprietary specification agreed to between the filler manufacturer, equipment supplier, and end owner/user. Proprietary fillers require special attention; see MJ-8 of this Standard and QW-250 and QW-350 of ASME BPVC, Section IX. Filler metals may be in the form of welding wire, consumable inserts, or other shapes or forms.

Appropriate filler metals shall be used, as recommended by the manufacturers. For stainless steel base metals, only low carbon grades of stainless steel filler metals shall be used (e.g., for 316L base metal only 316L or 316LSi filler metal shall be used; for 304L base metal 308L or 316L filler metals shall be used). Stainless steel or nickel alloy with high molybdenum content may require special filler metals. The base metal manufacturer should be consulted.

MJ-6 WELD ACCEPTANCE CRITERIA

MJ-6.1 General (02)

Welding for a sterile environment requires that the weld shall not result in a surface that will contribute to microbiological growth and contamination of the product. The weld shall not have any discontinuities such as cracks, voids, porosity, or joint misalignment that will promote contamination of the product. All welding procedures shall be qualified to MJ-8.

MJ-6.2 Pressure Vessels and Tanks

Weld acceptance criteria for pressure vessels and tanks shall be in accordance with ASME BPVC, Section VIII, Division 1.

MJ-6.3 Piping (02)

Weld acceptance criteria for piping shall be in accordance with ASME B31.3, paras. 341.3.2 through 341.3.4 and Table 341.3.2, along with the criterion value notes for Table 341.3.2 for pipe welds.

MJ-6.4 Tubing (02)

Visual weld acceptance criteria (including borescopic acceptance criteria) for hygienic tubing and fittings

Copyright ASME International
Provided by IHS under license with ASME
No reproduction or networking permitted without license from IHS
Not for Resale

that are internally and externally inspected shall be in accordance with the weld acceptance criteria of MJ-6 (see Fig. MJ-1). This Standard does not require radiography unless specified by the owner/user or other applicable code.

Preproduction sample welds, when required, shall be submitted by the contractor to the owner/user to establish weld quality. Owner/user, contractor, and inspection contractor shall agree to the number and type of sample welds.

During construction, sample welds shall be made on a regular basis to verify that the equipment is operating properly and that the purging setup is adequate to prevent discoloration beyond the level agreed upon by the owner/user and contractor. Owner/user and contractor shall agree to the frequency of sample welds. It is strongly recommended that these sample welds be made at the beginning of each work shift, whenever the purge source bottle is changed, and when the automatic or machine welding equipment is changed (such as when the orbital tube weld head is changed).

(02) **MJ-6.4.1 Fit-up and Mismatch.** Tubing shall be aligned so as to prevent hold-up volume areas that would contribute to contamination of the product. The maximum misalignment is 15% of nominal wall thickness [see Fig. MJ-1(b)]. In the case of two different wall thicknesses, maximum misalignment shall be governed by the wall thickness of the thinner tube.

MJ-6.4.2 Concavity

(a) Maximum outside diameter (OD) concavity shall be limited to 10% of the nominal wall thickness over the entire circumference with 15% of the nominal wall thickness permitted over a maximum total of 25% of the circumference [see Fig. MJ-1(c)].

(02) *(b)* Maximum inside diameter (ID) concavity shall be limited to 10% of the nominal wall [see Fig. MJ-1(d)]. In any case, OD and ID concavity shall be such that the wall thickness is not reduced to less than the minimum thickness required in DT-5. In the case of two different wall thicknesses, maximum concavity shall be governed by the wall thickness of the thinner tube.

(02) **MJ-6.4.3 Convexity.** Inside diameter convexity is limited to 10% of the nominal wall thickness. Outside diameter convexity is limited to 0.015 in. [see Fig. MJ-1(f)]. In the case of two different wall thicknesses, maximum OD or ID convexity shall be governed by the wall thickness of the thinner tube.

MJ-6.4.4 Weld Penetration. All butt welds shall be full penetration to the ID of the wall thickness [see Figs. MJ-1(a) and MJ-1(e). Tack welds shall be fully consumed by the process. In the case of two different wall thicknesses, the weld shall penetrate to the ID of the thickest wall.

MJ-6.4.5 Discoloration. Discoloration shall be minimized on all process surfaces. The weld bead shall be free of discoloration on the ID. However, a slight discoloration (light straw or light blue color, or hueing) may be permitted in the heat-affected zone. This discoloration level shall be determined by the owner/user and contractor. Any discoloration that is acceptable shall be tight to the surface and unable to be removed during normal operation. Depending on the surface finish, it may not be possible to totally eliminate discoloration. For this purpose, AWS D18.2 can be used as a guide. Typically, Sample 4 and above have been considered unacceptable. For all conditions, the weld and heat affected zone shall have no evidence of rust, free iron, or sugaring. (02)

MJ-6.4.6 Tungsten Inclusions. Tungsten inclusions shall meet the requirements of ASME B31.3.

MJ-6.4.7 Arc Strikes. Arc strikes are not permitted. They may be removed by mechanical polishing as long as the minimum design wall thickness is not compromised.

MJ-6.4.8 Weld Bead Width (02)

(a) Inside Diameter. Inside diameter weld bead width shall not be the sole criterion for rejection. A typical internal bead width of 1.5 times the nominal wall thickness has been acceptable.

(b) Outside Diameter. This subparagraph only applies to welds not accessible to internal inspection. The exterior of the weld bead shall be straight and uniform around the entire weld circumference [see Fig. MJ-1(g)]. The minimum weld bead width shall not be less than 50% of the maximum weld bead width [see Fig. MJ-1(h)]. The maximum weld bead meander shall be 25% of the weld bead width, measured as deviation from the weld centerline [see Fig. MJ-1(i)].

MJ-6.4.9 Weld Defects

(a) Rewelding (reflow) may be attempted for the following defects:

(1) incomplete penetration (one time only); and

(2) lack of fusion.

Copyright ASME International
Provided by IHS under license with ASME
No reproduction or networking permitted without license from IHS
Not for Resale

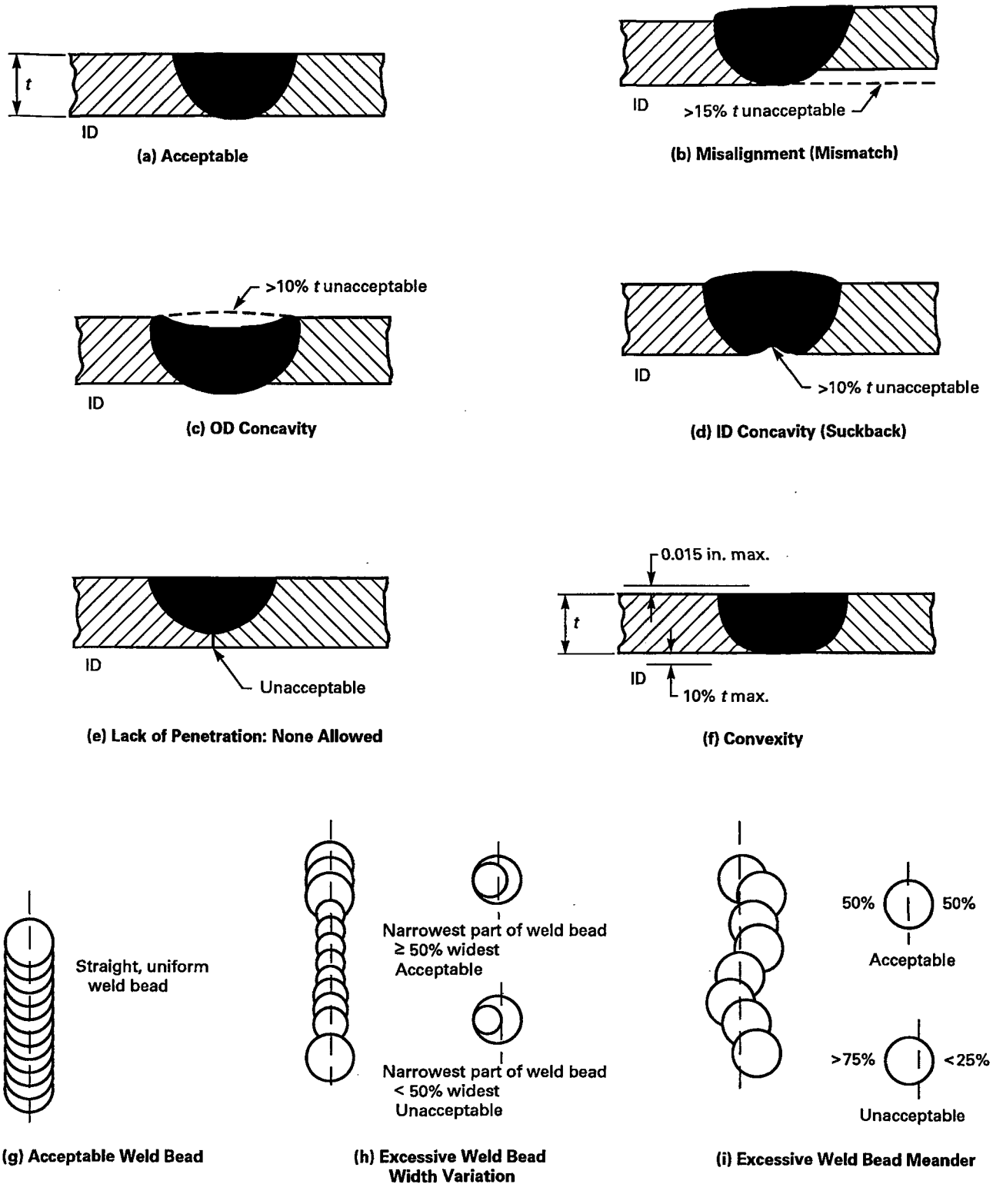

FIG. MJ-1 ACCEPTABLE AND UNACCEPTABLE WELD PROFILES FOR TUBE WELDS

Copyright ASME International
Provided by IHS under license with ASME
No reproduction or networking permitted without license from IHS
Not for Resale

(b) The following defects shall be either cut out or repaired at the discretion of the owner/user:

(1) lack of fusion after reflow;
(2) cracks;
(3) undercut;
(4) crater crack;
(5) burn-through;
(6) icicles;
(7) porosity;
(8) arc strikes as determined in MJ-6.4.7;
(9) discoloration as determined in MJ-6.4.5;
(10) OD convexity as determined in MJ-6.4.3;
(11) OD concavity as determined in MJ-6.4.2;
(12) ID concavity as determined in MJ-6.4.2; and
(13) ID convexity as determined in MJ-6.4.3.

(02) MJ-6.5 Sample Welds

Sample welds for tubing shall meet all the acceptance criteria of MJ-6.4, except that the requirements of MJ-6.4.8(a) and (b) both apply.

MJ-7 INSPECTION, EXAMINATION, AND TESTING

MJ-7.1 Scope

These paragraphs provide for the inspection/examination of bioprocessing equipment and components including pressure vessels, tanks, skids, pumps, piping, tubing, fittings, and clamps. Examination methods, terms, and definitions shall be as defined in Part GR of this Standard and in other existing recognized codes and standards, including ASME BPVC, Section VIII, Division 1; ASME B31.3; and AWS-QC1 and SNT-TC-1A requirements for examiner and inspector certifications.

(02) MJ-7.2 Types of Examinations

Owner/user, contractor, inspection contractor, and/or engineer shall agree to the types of examinations, unless otherwise specified in the applicable code.

MJ-7.2.1 Pressure Vessels and Tanks. Examinations including visual, liquid penetrant, radiographic, and ultrasonic shall be performed in accordance with the provisions of ASME BPVC, Section VIII, Division 1. Personnel performing examinations of pressure vessels and tanks designed to ASME BPVC, Section VIII, Division 1, shall meet requirements of the appropriate section of that Code.

MJ-7.2.2 Piping. Examinations including visual and any special method (as defined in ASME B31.3, Chapter VI, para. 344.1.2) shall be performed in accordance with the provisions of ASME B31.3, Section 344. Personnel performing examinations of piping systems shall meet the requirements of ASME B31.3, para. 342.1, Personnel Qualification and Certification, and 342.2, Specific Requirement.

MJ-7.2.3 Tubing. Examinations including visual, liquid penetrant, radiographic, ultrasonic, and any supplementary examinations (as defined in ASME B31.3, Chapter VI, para. 344.1.2) shall be performed in accordance with the provisions of ASME B31.3, Section 344. The external surfaces of all welds shall be visually examined. (02)

Personnel performing examinations of tubing systems shall meet the requirements of ASME B31.3, para. 342.1, Personnel Qualification and Certification and 342.2, Specific Requirement.

Owner/user, installing contractor, inspection contractor, and/or engineer shall agree to the minimum percentage of welds to be selected for borescopic examination. The contractor shall submit an inspection plan to ensure that welds meet the acceptance criteria of this Part. This plan shall include borescopic or direct visual inspection of the internal surfaces of an agreed-to minimum percentage of welds by the owner/user and contractor, but a minimum of 20% of all welds shall be randomly selected in each separate system. The contractor shall also submit a procedure for checking blind or nonaccessible welds. The random selection of the accessible welds to be examined shall be up to the owner/user's inspector's discretion. There shall also be a plan for checking each operator's first shift of production.

At the owner/user's discretion, personnel performing borescopic examinations or inspections shall meet the requirements of ASME B31.3, paras. 340.4, 342.1, and 342.2. Personnel performing these inspections may also be certified as Level II or III visual inspectors in accordance with the latest edition of SNT-TC-1A or possess a current AWS-QC1 Certified Welding Inspector certification.

MJ-7.3 Examination Procedures

MJ-7.3.1 Pressure Vessels and Tanks. Examination procedures for pressure vessels and tanks shall be in accordance with ASME BPVC, Section VIII, Division 1.

Copyright ASME International
Provided by IHS under license with ASME
No reproduction or networking permitted without license from IHS
Not for Resale

MJ-7.3.2 Piping. Examination procedures for piping systems shall be in accordance with the requirements of ASME B31.3, para. 343.

MJ-7.3.3 Tubing. Examination procedures for tubing systems shall be in accordance with the requirements of ASME B31.3, para. 343.

MJ-7.4 Supplementary Examinations

The execution of supplementary examinations and testing (such as borescopic and surface finish) for any system shall be in accordance with ASME B31.3, para. 341.5.

MJ-7.5 Testing

MJ-7.5.1 Pressure Vessels and Tanks. Testing of pressure vessels designed to code specifications shall be performed in accordance with ASME BPVC, Section VIII, para. UG-99 or UG-100.

MJ-7.5.2 Piping. Hydrostatic or pneumatic testing of piping systems shall be performed in accordance with ASME B31.3, Chapter VI, Section 345.

MJ-7.5.3 Tubing. Hydrostatic or pneumatic testing of tubing systems shall be performed in accordance with ASME B31.3, Chapter VI, Section 345.

MJ-7.6 Records

MJ-7.6.1 Pressure Vessels and Tanks. Records and retention of records for code vessels shall be in accordance with ASME BPVC, Section VIII, paras. UW-51 for radiographs, UG-120 for manufacturer's data reports, and UW-52 for spot examination of welds.

MJ-7.6.2 Piping. Records and retention of records associated with piping shall be in accordance with ASME B31.3, Chapter VI, Section 346.

MJ-7.6.3 Tubing. Records and retention of records associated with hygienic tubing shall be in accordance with ASME B31.3, Chapter VI, Section 346.

MJ-8 PROCEDURE QUALIFICATION

MJ-8.1 Pressure Vessels and Tanks

Welding procedures for pressure vessels and tanks shall be qualified in accordance with ASME BPVC, Section IX, plus any supplementary requirements in the specific code section under which the vessels or tanks are designed.

MJ-8.2 Piping

Welding procedures for piping systems shall be qualified in accordance with ASME BPVC, Section IX, plus any supplementary requirements in ASME B31.3.

MJ-8.3 Tubing

Welding procedures for machine or automatic or manual gas tungsten-arc welding of hygienic tubing systems shall be qualified in accordance with ASME BPVC, Section IX, with the following additions:

(a) A change in the type or nominal composition of the backing (purge) gas shall require requalification (see QW-250).

(b) A change from one AWS classification of filler metal to another, or to a proprietary filler metal, shall require requalification (see QW-250).

MJ-9 PERFORMANCE QUALIFICATION

MJ-9.1 Pressure Vessels and Tanks

Welder and welding operator performance qualifications for pressure vessels and tanks shall be in accordance with ASME BPVC, Section IX.

MJ-9.2 Piping

Welder and welding operator performance qualifications for piping systems shall be in accordance with ASME BPVC, Section IX.

MJ-9.3 Tubing

Welder and welding operator performance qualifications for manual or machine or automatic gas tungsten-arc welding of hygienic tubing systems shall be in accordance with ASME BPVC, Section IX.

MJ-10 DOCUMENTATION REQUIREMENTS (02)

The following documentation shall be presented to the owner/user or his/her designee, as a minimum:

(a) Welding Documentation. Welding Procedure Specifications (WPS) used, their respective Procedure Qualification Records (PQR), and Welder Performance Qualifications (WPQ) or Welding Operator Performance Qualifications (WOPQ).

(b) Weld Maps. When required by the owner/user, weld maps of bioprocesssing components; weld inspection logs of bioprocessing components (including type and date of inspection); and welder identification of

Copyright ASME International
Provided by IHS under license with ASME
No reproduction or networking permitted without license from IHS
Not for Resale

each weld shall be provided either on the weld map or on the inspection log. Standard valves and fittings do not fall under the above unless specifically required by the owner/user.

(c) Materials. Material Test Reports (MTRs) shall be provided for each component. Certification of compliance may be used in lieu of MTRs when agreed to by the owner/user.

(d) Testing Records. Other records (e.g., pressure test, surface finish) shall be provided as required by Part SD of this Standard.

MJ-11 PASSIVATION

If agreed to by the owner/user and the manufacturer, all welded systems shall be passivated after cleaning and prior to use.

Copyright ASME International
Provided by IHS under license with ASME
No reproduction or networking permitted without license from IHS
Not for Resale

PART SF
STAINLESS STEEL AND HIGHER ALLOY INTERIOR SURFACE FINISHES

SF-1 SCOPE

The purpose of this Part is to provide criteria of interior surface finishes for bioprocessing equipment and distribution system components. This Part shall be referenced when specifying interior finishes for the specific systems, including, but not limited to, vessels and distribution system components.

SF-2 OBJECTIVE

The objective is to describe an acceptable interior surface finish on selected materials of construction to enhance their cleaning and sterilization.

SF-3 APPLICATIONS

This Standard shall be applicable to all systems designated by the owner/user or his/her representative. These systems may include, but are not limited to, one or more of the following:

(a) USP, Water-for-Injection (WFI);

(b) USP, Purified Water;

(02) *(c)* USP, Clean and Pure Steam; and

(d) other product/process contact surface systems.

These interior surface requirements shall apply to all accessible and inaccessible areas of the systems that directly or indirectly come in contact with the designated product.

SF-4 MATERIAL

The preferred material of construction for these systems is austenitic stainless steel, type 316L alloy. Other materials may be specified by the owner/user. They may be of the following form:

(a) Tubing. ASTM A 213/A 213M, ASTM A 269, ASTM A 270;

(b) Piping. ASTM A 312;

(c) Fittings. To be made to the tube and/or pipe fitting specifications shown in Part GR;

(02) *(d) Plate, Sheet, and Strip.* ASTM A 240/A 240M, ASTM A 666.

(e) Forged Wrought and Casting. ASTM A 182 Gr 316L, ASTM A 351 Gr CF 3M, and ASTM A 484/A 484M.

SF-5 TYPICAL STAINLESS STEEL INTERIOR SURFACE ANOMALY CHARACTERISTICS

Surface anomalies can be classified into two general categories:

(a) Type 1. Surface anomalies caused by the chemical composition and quality of the material. Examples of these anomalies are:

(1) inclusions;

(2) variation in alloying elements; and

(3) welding slag. (02)

(b) Type 2. Surface anomalies caused by inadequate control of the associated process operations. Examples of these processes and the anomalies they create are:

(1) mechanical grinding and polishing:

(a) scratches, dents, nicks; and

(b) nonuniform surface finishes.

(2) welding:

(a) surface oxides and discoloration;

(b) undercut, protrusions; (02)

(c) improper weld conditioning such as grinding, forging, and cleaning; and

(d) welding slag. (02)

(3) Other surface treatment processes that utilize chemicals and/or electrochemicals:

(a) overetching;

(b) localized corrosion by inadequate removal of residuals; and

(c) staining, ionic bonding.

SF-6 CLASSIFICATION OF INTERIOR SURFACE FINISHES ON WELDMENTS FOR PROCESS EQUIPMENT AND COMPONENTS

The following are classifications of the interior weld finishes that are applicable for process equipment and components.

Copyright ASME International
Provided by IHS under license with ASME
No reproduction or networking permitted without license from IHS
Not for Resale

(02)

TABLE SF-1 ACCEPTANCE CRITERIA FOR INTERIOR SURFACE FINISHES OF TUBING

Anomaly or Indication	Acceptance Criteria
Cluster of pits	None accepted.
Demarcation	If longer dimension is less than the tube diameter and R_a increases <50%.
Grit lines	If R_a is met.
Longitudinal welds	If polished smooth, blended, and R_a is met.
Nicks	None accepted.
Oxides	None accepted.
Pits	If diameter <0.020 in. and bottom is shiny [Note (1)].
Scratches [Note (2)]	If depth <0.003 in.
Star burst	If <75% of the width of the weld bead.
Surface cracks	None accepted.
Surface inclusions	If R_a is met.
Surface residuals	None accepted, visual inspection without magnification.
Surface roughness (R_a)	See Table SF-2.
Weld slag (per tube length)	Up to 3, if <75% of the width of the weld bead [Note (3)].
Weld porosity	If no liquid penetrant indication.

NOTES:
(1) Black bottom pit of any depth is not acceptable.
(2) 12 in. of cumulative length per tube length.
(3) Tube length is 20 ft.

(a) Class 1. Welds are to be ground smooth and flush. Visual pits and weld defects are removed.

(b) Class 2. Welds are ground smooth but not flush. The upper surface of the bead is removed, but visual pits and weld defects are not removed.

(c) Class 3. Welds as welded, no grinding.

SF-7 INSPECTION AND TECHNIQUES EMPLOYED IN THE CLASSIFICATION OF INTERIOR SURFACE FINISHES

Interior surface finish inspections are made by one or more of the following methods:

(a) Visual Inspection:

(1) borescope; and

(2) wide field optical microscopes.

(b) Liquid Penetrant.

(c) Profilometer.

(d) Scanning Electron Microscopy.

(e) Electron Spectroscopy for Chemical Analysis.

(f) Auger Electrospectroscopy for Chemical Analysis.

Refer to Tables SF-1 through SF-8 for the acceptance criteria for interior surface finish.

SF-8 DESCRIPTION OF VARIOUS SURFACES AVAILABLE ON STAINLESS STEEL AND HIGHER ALLOYS (02)

The following surface finishes may be on the interior as well as the exterior surfaces. These are general definitions and terminologies. They may not be applicable in all cases. The final criteria shall be determined by the R_a values in the following tables rather than the polishing method.

(a) Piping, Tubing, and Fittings:

(1) as fabricated;

(2) pickled and/or passivated;

(3) bright hydrogen annealed;

(4) mechanically polished;

(5) mechanically buffed;

(6) chemically polished; and

(7) electropolished.

(b) Sheet, Strip, and Plate:

(1) As Fabricated. Without any specific surface treatments.

(2) Rolled Finish. Manufactured by either hot or cold rolled process.

(3) No. 1. A dull, hot rolled finish, annealed and pickled.

Copyright ASME International
Provided by IHS under license with ASME
No reproduction or networking permitted without license from IHS
Not for Resale

(02) **TABLE SF-2 R_a READINGS FOR TUBING**

Surface Designation	As Drawn and/or Mechanically Polished			
	R_a, Average [Note (1)]		R_a, Max.	
	μ-in.	μm	μ-in.	μm
SFT1	15	0.375	20	0.5
SFT2	20	0.5	25	0.625
SFT3	25	0.625	30	0.75
	Mechanically Polished and Electropolished, or Electropolished			
	R_a, Average [Note (1)]		R_a, Max.	
	μ-in.	μm	μ-in.	μm
SFT4	10	0.25	15	0.375
SFT5	15	0.375	20	0.625
SFT6	20	0.5	25	0.75

GENERAL NOTE: All R_a readings are taken across the lay, wherever possible.

NOTE:
(1) The average R_a is derived from readings taken at four cross sections approximately 90 deg apart. No single reading exceeding R_a, max.

(4) No. 2D. A dull, cold rolled finish, annealed and pickled.

(5) No. 2B. A bright, cold rolled finish, annealed and pickled.

(6) No. 4. A general-purpose polished finish widely used for architectural panels, trim, and sanitary equipment. Following initial grinding with coarser abrasives, the surface is finally finished with lubricated 150 mesh abrasives belts.

(7) No. 4S. Processed as No. 4 except the final surface is polished to a smoother finish. This alternative finish must be specified by the purchaser; the specification must state a No. 4 finish, using a 240 or 320 grit mechanical polish, whose particular surface roughness must meet the specified R_a value.

(8) No. 6. A dull finish having a lower reflectivity than No. 4. It is produced by a tampico brushing in a medium of abrasive and oil and is used primarily for architectural application.

(9) No. 7. A finish with a high degree of reflectivity, produced by buffing to a finely ground surface without removing the grit lines.

(10) No. 8. The most reflective finish, obtained by polishing with successively finer abrasives and buffing extensively with very fine buffing rouges. The surface is essentially free of grit lines from primary grinding operations. This finish is most widely used for press plates, mirrors, etc. This finish can be produced on one side only; the other side may be rough ground in order to obtain the necessary flatness.

In fabricating, every effort shall be made to protect the mill finish while the material is in storage or being processed.

(c) Wrought and Cast Forgings. These items are available in one of the following, or a combination of surface finishes:

(1) as fabricated or machined;

(2) mechanically ground, polished, or buffed; and

(3) abrasive blast cleaned, using one of the following methods:

(a) sand blast;

(b) shot blast;

(c) glass blast; or

(d) wet blast.

(4) slurry polished;

(5) roll deburred;

(6) chemically cleaned;

(a) acid washed (pickled and passivated);

(b) solvent washed; and

(7) electropolished.

Copyright ASME International
Provided by IHS under license with ASME
No reproduction or networking permitted without license from IHS
Not for Resale

(02)

TABLE SF-3 ACCEPTANCE CRITERIA FOR INTERIOR SURFACE FINISHES OF FITTINGS

Anomaly or Indication	Acceptance Criteria
Cluster of pits	None accepted.
Demarcation	If <5% of the total area when visually inspected and R_a is met.
Grit lines	If R_a is met.
Longitudinal welds	If polished smooth, blended, and R_a is met.
Nicks	None accepted.
Oxides	None accepted.
Pits	If diameter <0.020 in. and bottom is shiny.
Scratches	If length <0.25 in., depth <0.003 in., and R_a is met.
Star burst	None accepted.
Surface cracks	None accepted.
Surface inclusions	If R_a is met and there is no liquid penetrant indication.
Surface residuals	None accepted, visual inspection without magnification.
Surface roughness (R_a)	See Table SF-4.
Weld slag	None accepted.
Weld porosity	None accepted.

(02)

TABLE SF-4 R_a READINGS FOR FITTINGS

	Mechanically Polished			
	R_a, Average [Note (1)]		R_a, Max.	
Surface Designation	µ-in.	µm	µ-in.	µm
SFF1	15	0.375	20	0.5
SFF2	20	0.5	25	0.625
SFF3	25	0.625	30	0.75
	Mechanically Polished and Electropolished			
	R_a, Average [Note (1)]		R_a, Max.	
	µ-in.	µm	µ-in.	µm
SFF4	10	0.25	15	0.375
SFF5	15	0.375	20	0.5
SFF6	20	0.5	25	0.625

GENERAL NOTE: All R_a readings are taken across the lay, wherever possible.

NOTE:

(1) The average R_a is derived from readings taken at four cross sections approximately 90 deg apart. Other R_a readings are available if agreed upon between vendor and owner/user. No single reading exceeding R_a, max.

Copyright ASME International
Provided by IHS under license with ASME
No reproduction or networking permitted without license from IHS
Not for Resale

TABLE SF-5 ACCEPTANCE CRITERIA FOR INTERIOR SURFACE FINISHES OF VALVE BODIES (02)

Anomaly or Indication	Acceptance Criteria
Cluster of pits	None accepted.
Demarcation	If <5% of the total area when visually inspected and R_a is met.
Grit lines	If R_a is met.
Nicks	If depth <0.010 in.
Oxides	None accepted.
Pits	If diameter <0.020 in. and bottom is shiny.
Porosity	If diameter <0.010 in. and bottom is shiny.
Scratches	If length <0.25 in., depth <0.003 in., and R_a is met.
Surface cracks	None accepted.
Surface inclusions	If R_a is met and there is no liquid penetrant indication.
Surface residuals	None accepted, visual inspection without magnification.
Surface roughness (R_a)	See Table SF-6.
Weld slag	None accepted.

TABLE SF-6 R_a READINGS FOR VALVES (02)

	Mechanically Polished			
	R_a, Average [Note (1)]		R_a, Max.	
Surface Designation	µ-in.	µm	µ-in.	µm
SFV1	15	0.375	20	0.5
SFV2	20	0.5	25	0.625
SFV3	25	0.625	30	0.75
	Mechanically Polished and Electropolished			
	R_a, Average [Note (1)]		R_a, Max.	
	µ-in.	µm	µ-in.	µm
SFV4	10	0.25	15	0.375
SFV5	15	0.375	20	0.5
SFV6	20	0.5	25	0.625

GENERAL NOTE: All R_a readings are taken across the lay, wherever possible.

NOTE:

(1) The average R_a is derived from four readings taken at different locations. Other R_a readings are available if agreed upon between vendor and owner/user. No single reading exceeding R_a, max.

Copyright ASME International
Provided by IHS under license with ASME
No reproduction or networking permitted without license from IHS
Not for Resale

(02)

TABLE SF-7 ACCEPTANCE CRITERIA FOR INTERIOR SURFACE FINISHES OF VESSELS

Anomaly or Indication	Acceptance Criteria
Cluster of pits	None accepted per inspection window [Note (1)].
Demarcation	If on the top head only and R_a is met.
Grit lines	If R_a is met.
Longitudinal welds	If polished smooth, blended, and R_a is met.
Nicks	None accepted.
Oxides	None accepted.
Pits	If diameter <0.020 in. and if shiny, per inspection window [Note (1)].
Scratches	If length <0.50 in. at 0.003 depth and if <3 per inspection window [Note (1)].
Star burst	None accepted.
Surface cracks	None accepted.
Surface inclusions	If R_a is met and there is no liquid penetrant indication.
Surface residuals	None accepted, visual inspection without magnificaiton.
Surface roughness (R_a)	See Table SF-8.
Weld slag	None accepted.
Weld porosity	None accepted.

NOTE:
(1) An inspection window is defined as an area 4 in. × 4 in.

(02)

TABLE SF-8 R_a READINGS FOR VESSELS

	Mechanically Polished			
	R_a, Average [Note (1)]		R_a, Max.	
Surface Designation	µ-in.	µm	µ-in.	µm
SFVV1	15	0.375	20	0.5
SFVV2	20	0.5	25	0.625
SFVV3	25	0.625	30	0.75
	Mechanically Polished and Electropolished			
	R_a, Average [Note (1)]		R_a, Max.	
	µ-in.	µm	µ-in.	µm
SFVV4	10	0.25	15	0.375
SFVV5	15	0.375	20	0.5
SFVV6	20	0.5	25	0.625

GENERAL NOTE: All R_a readings are taken across the lay, wherever possible.

NOTE:
(1) The average R_a is derived from a minimum of four readings per inspection window. An inspection window is defined as an area 4 in. × 4 in. Other R_a readings are available if agreed upon between vendor and owner/user. No single reading exceeding R_a, max.

Copyright ASME International
Provided by IHS under license with ASME
No reproduction or networking permitted without license from IHS
Not for Resale

PART SG
EQUIPMENT SEALS

SG-1 SCOPE AND PURPOSE

SG-1.1 Scope

This Part defines the design and materials of construction of seals in bioprocessing equipment. For this purpose, seals are defined as those elements that create or maintain process boundaries between system components and/or subassemblies in order to ensure system integrity in validated process and utility systems. It is not the intent of this Part to inhibit the development or use of new technologies.

SG-1.2 Purpose

The purpose of this Part is to enable equipment manufacturers, system designers, and end users to specify the required seal type and performance for a specific application.

SG-2 SEAL CLASSES

Seal classes define the level of seal integrity for a given service condition with regard to the average effect that leakage by the seal or catastrophic failure of the seal can have on the product within the system or on the environment exterior of a fluid system.

SG-2.1 Class I Seals

Seals defined under this class may experience some minute leakage due to sliding interaction with stems or shafts such as O-rings [SG-4.1.1.2(a)] or some packings [SG-3.5.6.3(a)]. Class I seals shall be allowed only in a continuously sterilizing environment. Examples are valves handling sterile steam. Mechanical seals may be of single seal arrangement (SG-3.5.3.1) such as packing [SG-3.5.6.3(a)], lip seals [SG-3.5.6.3(b)], and labyrinth seals [SG-3.5.6.3(c)].

SG-2.2 Class II Seals

Seals defined under this class shall include only nonsliding types of valve seals such as diaphragms [SG-4.1.1.2(b) and (c)]. Mechanical systems shall have multiple seals (SG-3.5.3.2). Examples of uses of Class II seals are for Water-for-Injection (WFI) and sucrose solutions.

SG-2.3 Class III Seals

Valve seals defined under this class shall have no sliding surfaces and shall exhibit a minimum degree of permeation. Examples of uses of Class III seals are for toxic fluids, highly dangerous fluids, and fluids containing pathogenic or recombinant DNA organisms. Shafts or stems shall have a secondary seal [SG-4.1.1.1(b)], while mechanical shaft seals shall have multiple seals [SG-3.5.3.2(a)] with a barrier fluid.

SG-3 GENERAL PROVISIONS FOR SEALS IN BIOPROCESSING SERVICE: USER BASIC DESIGN REQUIREMENT

SG-3.1 Seal Performance

The equipment supplier shall be informed of all the conditions under which the seal may be expected to operate. These shall include, in addition to the service temperature and pressure, any parameters that may affect the seal performance. It is up to the equipment supplier to inform the end user of the life cycle expectancy and the methods that will ensure that the seal operates within its design classification (e.g., routine maintenance).

SG-3.1.1 Service Temperature. Seals shall be capable of preventing unacceptable leakage when thermal cycled between the rated upper and lower temperature limits. The number of allowable thermal cycles shall be stated by the manufacturer.

SG-3.1.2 Service Pressure. The service pressure is the maximum permissible usage pressure for which the seal meets the maximum permissible leakage rate. The service pressure and acceptance level for pressure rating shall be furnished by the seal supplier.

SG-3.1.3 Bioburden. Bioburden is the concentration of microbial matter per unit volume. Microbial matter includes viruses, bacteria, yeast, mold, and parts thereof.

Copyright ASME International
Provided by IHS under license with ASME
No reproduction or networking permitted without license from IHS
Not for Resale

SG-3.1.4 Cavitation Resistance. The seal shall be placed so as to minimize damage by cavitation.

SG-3.1.5 Sterilization. The complete sterilization procedure shall be supplied by the end user. This shall include the methods, frequency, and length of operation.

SG-3.1.6 Cleaning. The complete cleaning procedure shall be supplied by the end user. This shall include the methods, frequency, and length of operation.

(02) **SG-3.1.7 Passivation.** The complete passivating procedure shall be supplied by the end user. The equipment supplier shall inform the end user whether the seal will be able to perform as specified after passivation, or whether a new seal is required before the start of operation.

SG-3.2 System Requirements

Cleaning and sterilization of a seal occurs on a regular basis. This is necessary to ensure elimination of any bacterial growth, which could harm future products or the environment. The methods of cleaning are:

SG-3.2.1 Cleaning Systems

(a) Clean-In-Place (CIP). The wetted part of a seal shall be designed so that accumulation of system media can be removed through the action of a cleaning solution. The seal should be placed to allow for best drainability.

(b) Clean-Out-of-Place (COP). Disassembly for cleaning.

(02) **SG-3.2.2 Sterilizing Systems.** Seal requirements shall be based on the sterilization method utilized. All wetted seal surfaces shall be designed to minimize cracks and crevices. When cracks and crevices cannot be avoided, sterilization testing shall be performed to validate sterility within the system boundaries. All seals and seal contact surfaces shall be designed to accommodate expansion and contraction during sterilization and cooling-down stage. Seal materials shall be used that are corrosion-resistant to saturated steam and pure steam. The seal should be placed to allow for drainage of fluid. The following are typical sterilizing systems:

(a) Steam-In-Place (SIP). All seals and their assemblies shall have a minimum temperature rating meeting the requirements of SD-3.2.2.

(b) Chemical Sterilization.

(c) Hot Air Sterilization at 160°C.

SG-3.2.3 Passivation Systems. The following are typical passivation systems:

(a) acid treatments; and

(b) proprietary trade formulations.

Full information shall be provided as to the corrosive or erosive effect on the seal.

SG-3.3 Seal Construction

SG-3.3.1 Materials

(a) Biocompatability. Biocompatability is defined here as the ability of a substance or material to be in contact with living matter such as bacteria or mammalian cells without interfering in any way with its metabolism or ability to live and procreate. Seal materials shall be biocompatible with the system fluid to ensure that the system fluid is not adversely affected by the seal material. The biocompatibility and proper material selection shall be the responsibility of the system user.

(b) Chemical and Extraction Resistance. Seal materials shall be resistant to corrosion from process, cleaning, and sterilization fluids. Selection shall be based on all media that could come in contact with the seal, including cleaning and sterilization media. Special consideration shall be made when the exposure is at elevated temperatures. (02)

(c) Permeation Resistance. Seal permeation shall be included in seal leakage criteria and not addressed as an individual topic.

(d) Surface Finish

(1) Seals shall be free of molding imperfections or burrs within the system boundary and on sealing surfaces.

(2) Seals shall be free of foreign matter on surfaces within the system boundary and on sealing surfaces.

(3) Surfaces to be sealed shall meet specifications provided by seal supplier based on performance and the requirements in Part SF.

(4) Molded seals and components shall have mold flashing removed to prevent contact with the product stream. (02)

(e) Particle Generation. Seal designs should minimize wear that generates particles that could enter the product.

SG-3.3.2 Crevices. A smooth, contoured, pocketless interior surface shall be created when seals are placed between the seal contact surfaces. Gaskets and O-ring seals generally should be flush with the interior surface of the pipeline or the equipment; refer to Figs. SD-1(b), SD-1(c), SD-1(d), and SD-2(a). All recessed seal contact surfaces shall avoid sharp corners, and be (02)

Copyright ASME International
Provided by IHS under license with ASME
No reproduction or networking permitted without license from IHS
Not for Resale

easily cleanable with seal removed. All seal and seal contact surfaces shall be designed to minimize cracks or crevices that might harbor system media, refer to SD-3.6.

SG-3.3.3 Dead Spaces. Dead spaces are defined here as a void in the wetted portion of the structure not completely occupied by a seal, usually required to allow for thermal expansion of the seal material. These should be avoided; all seal and seal contact surfaces shall be designed so that the system is self-draining when seals are properly installed.

SG-3.4 Compliance Requirements

(02) **SG-3.4.1 Certification of Compliance.** A certificate of compliance shall be issued by the seal manufacturer to certify compliance to this Standard when required by the end user. Additional agreements may be required; refer to SD-3.4.2.

(02) **SG-3.4.2 Test Requirements.** Test requirements shall comply with manufacturer's and/or user's quality assurance.

(02) SG-3.5 Sealing Systems

Sealing of rotating shafts, i.e., on pumps, agitators, and compressors, is accomplished with a system made up of a mechanical seal or seals and the necessary support equipment.

SG-3.5.1 Mechanical Seal. Basic components are the primary and mating rings held together to form the dynamic sealing surfaces perpendicular to the shaft as shown in Fig. SG-1. Seal faces shall be cooled and lubricated (e.g., by the sealed fluid and/or an exterior barrier fluid).

SG-3.5.2 Types of Seal Systems Based on Lubrication. Effective operation of a seal depends on the lubricating film between the faces. There are four types:

(a) Liquid Lubricated Contacting. Seal faces are cooled and lubricated by the fluid being sealed, i.e., process or barrier liquid. This system is normally applied to pumps.

(b) Liquid Lubricated Noncontacting. Seal faces are cooled and lubricated by a barrier liquid. In this system, the design of the seal faces is such that a generated lubricating film has a pressure greater than the liquid being sealed. This results in a noncontacting liquid seal design. This system is normally supplied to pumps.

(c) Gas Lubricated Contacting. Lightly loaded seal faces that are running dry are cooled and lubricated by the process or barrier gas being sealed as shown in Fig. SG-2. This is normally applied to top-entering agitators or fermentors.

(d) Gas Lubricated Noncontacting. Seal faces are cooled and lubricated by the process gas or a neutral barrier fluid like nitrogen or purified air to cool and lubricate the seal faces. The design of the seal faces is such that the generated gas film has a pressure greater than the pressure being sealed, creating a noncontacting design. This sealing concept is the most energy efficient and zero emissions control seal available to industry. This sealing concept is normally applied to pumps and compressors.

SG-3.5.3 Seal Arrangement. Seal arrangement is used to describe the design of a particular seal installation and the number of seals used on a piece of equipment. Single and multiple seal arrangements have been developed for emissions control and the development of various lubrication systems. Sealing arrangements are classified into two groups.

SG-3.5.3.1 Single Seal

(a) Internally Mounted, Process Lubricated. A single seal mounted inside the seal chamber is shown in Fig. SG-3. Process fluid pressure acts with the spring load to keep the seal faces in contact. The spring load shall be sufficient to provide adequate sealing pressure when fluid pressure is negative (vacuum).

(b) Externally Mounted, Process Lubricated. Outside mounted seals should be considered for low pressure applications. An external seal installation is lubricated by the process fluid being sealed as shown in Fig. SG-4. The purpose of using an outside mounted seal is to minimize the effects of corrosion that might occur if metal parts are directly exposed to the process fluid being sealed.

Externally mounted seals shall be lubricated such as by steam or gas depending on the process conditions. This type of design requires a seal face geometry to provide for the development of a gas or steam film at the seal faces. This type of installation is normally used on pumps having a repeller. Constant steam lubrication has the benefit of maintaining a sterile environment for low pressure applications. All external seal designs are intended for light duty service where the products are not considered hazardous to the plant environment.

SG-3.5.3.2 Dual Seals. Dual seal installations shall be used in applications requiring a neutral barrier fluid for lubrication, plant safety, and improved corrosion resistance.

Copyright ASME International
Provided by IHS under license with ASME
No reproduction or networking permitted without license from IHS Not for Resale

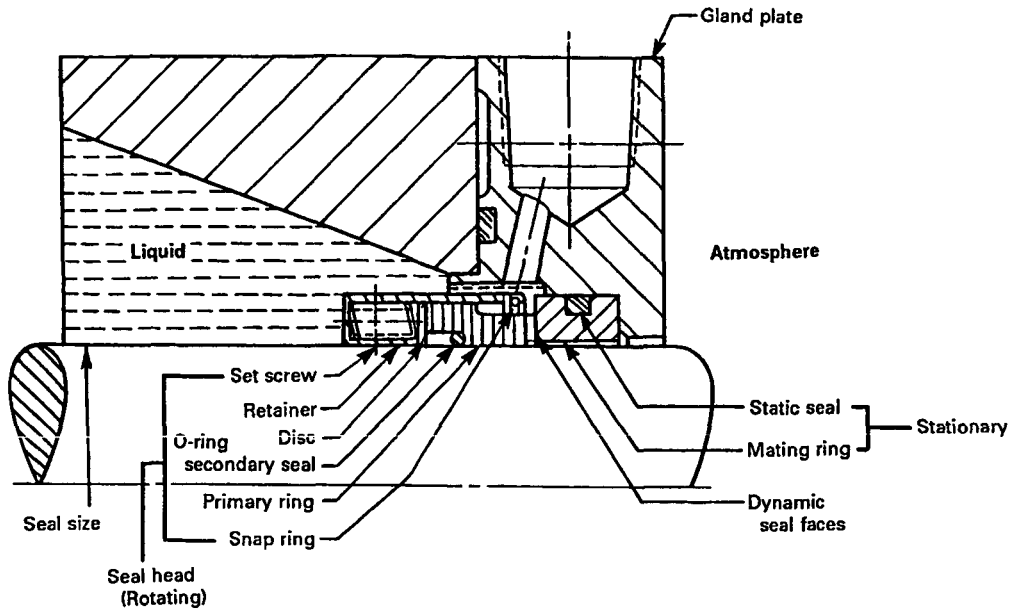

FIG. SG-1 BASIC COMPONENTS OF A SEAL

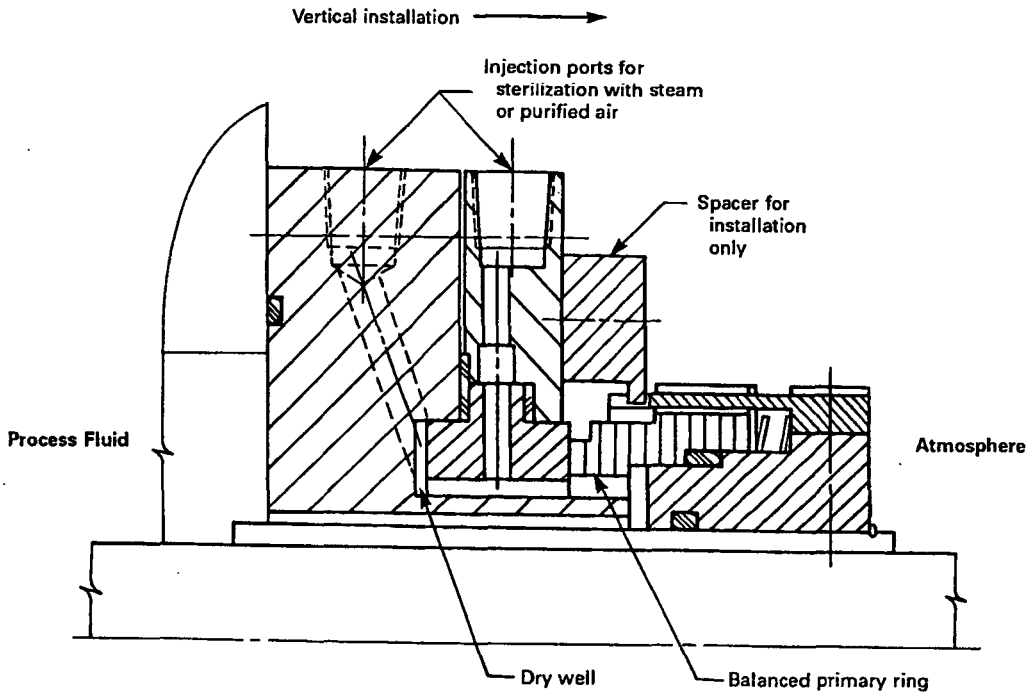

FIG. SG-2 SINGLE DRY RUNNING CONTACTING SEAL

Copyright ASME International
Provided by IHS under license with ASME
No reproduction or networking permitted without license from IHS
Not for Resale

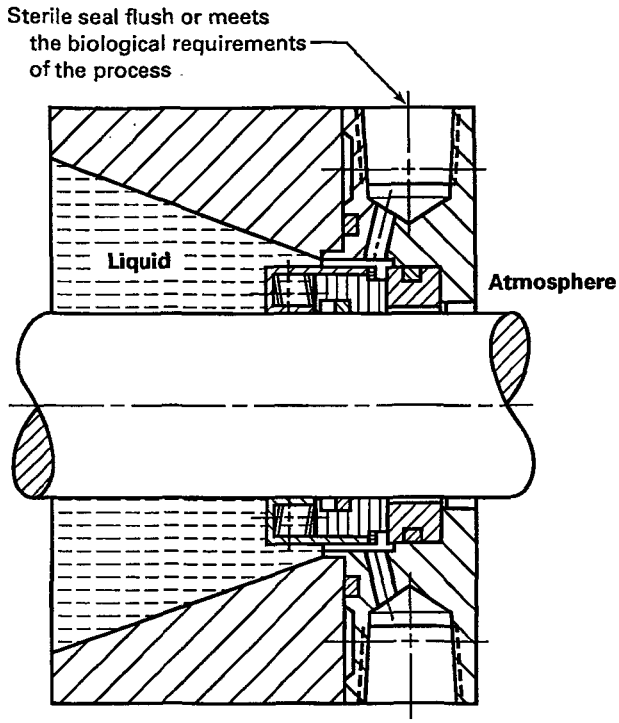

FIG. SG-3 INTERNALLY MOUNTED, PROCESS LUBRICATED CONTACT SEAL

(a) Double Seals. Double seals consist of two assemblies that will operate with a barrier fluid, always at higher pressure than the process fluid. Installation may be liquid or gas lubricated.

(b) Tandem Seals. This seal arrangement is made up of two single seals mounted in the same direction. The inboard seal carries the full differential pressure of the process fluid to atmosphere. The outboard seal contains a neutral barrier fluid that creates a buffer zone between the inboard seal and plant atmosphere. Normally the buffer fluid is maintained at atmospheric pressure. Developed heat at the inboard seal is removed with a seal flush similar to a single seal installation. The outboard seal chamber fluid shall be circulated to remove unwanted heat. In special cases the outboard seal may be gas lubricated. Examples of double and tandem seals are shown in Figs. SG-5 and SG-6.

SG-3.5.4 Cartridge Seals. Cartridge seals are a preferred assembly of the seal components and adaptive hardware. These assemblies are bench testable and can validate the seal before installation.

SG-3.5.5 Materials of Construction. All seal components shall be selected on the basis of the product being sealed and the fluids used for sanitation, cleaning, or sterilization. Material selection should also comply with FDA fluid additive regulations (see GR-9). Carbon seal faces are acceptable providing the ingredients are not health threatening. The surface structure of any materials should not be porous. Pores in any materials should not be permitted since the product sealed or the media used to clean the structure may become entrapped, resulting in contamination. Common materials of construction are identified in Table SG-1.

SG-3.5.6 Seal Piping and Lubrication Support Equipment

SG-3.5.6.1 Single Seal

(a) Dead-Ended Seal Chamber With Internal Circulation for Seal Cooling. The seal chamber shall be self-draining, as shown in Fig. SG-7(a), and is intended for use on light duty applications. Design of the seal chamber shall provide for the circulation of process fluid.

(b) Product flush shall be circulated to the seal faces for cooling. Circulation of process fluid shall be accomplished by a recirculation line from the pump discharge to the seal chamber as shown in Fig. SG-7(b). The seal chamber shall also be self-draining.

(c) External flush of a buffer or barrier fluid shall be circulated to the seal faces for cooling. Used where the process fluid is abrasive, a fluid compatible with the process shall be injected into the seal chamber at a pressure higher than the process fluid, as shown in Fig. SG-7(c).

SG-3.5.6.2 Dual Seals

(a) Double Seals

(1) Pressurized With External Liquid Compatible With the Process. The seal system is a thermosyphon for light duty service. Minimum size of the reservoir shall be determined by the seal manufacturer. The seal system shall be capable of being cleaned and steam-sterilized in place.

(2) Pressurized With External Liquid Compatible With the Process. The seal system shall have a forced circulation when service conditions are beyond a thermosyphon system. All parts of this system shall be capable of being cleaned and sterilized in place.

(3) Pressurized With Gas or Purified Air. Circulation of gas is not required for cooling. Gas is dead-ended in the seal chamber as shown in Fig. SG-8. The seal system shall be capable of being cleaned and sterilized in place.

(b) Tandem Seals

(1) Nonpressurized barrier liquid shall be circulated in the outboard seal chamber. Movement of liquid could be accomplished with a pumping ring. A minimum

Copyright ASME International
Provided by IHS under license with ASME
No reproduction or networking permitted without license from IHS
Not for Resale

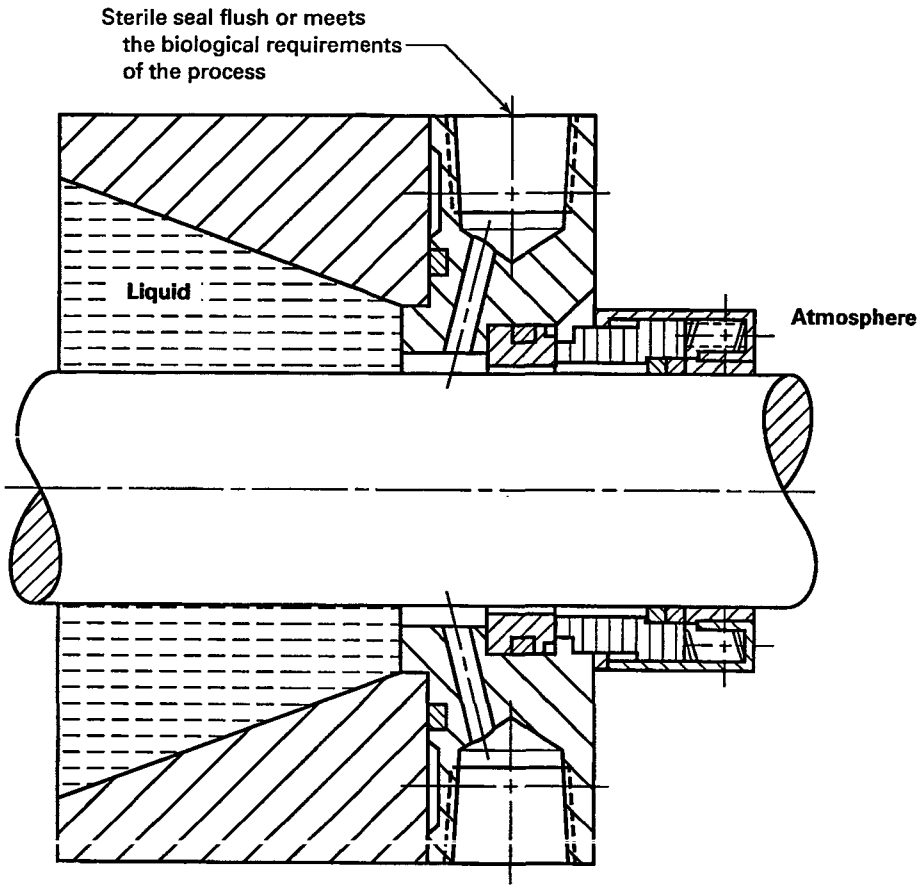

FIG. SG-4 EXTERNALLY MOUNTED, PROCESS LUBRICATED CONTACT SEAL

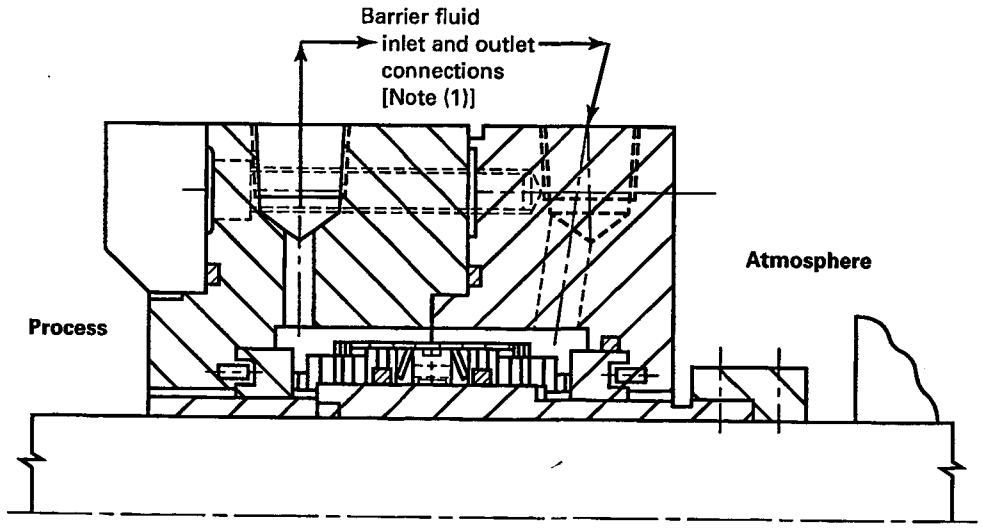

NOTE:
(1) Barrier fluid should meet or exceed the quality of the process side fluids (phnogens and particulates).

FIG. SG-5 DOUBLE SEAL INSTALLATION

Copyright ASME International
Provided by IHS under license with ASME
No reproduction or networking permitted without license from IHS
Not for Resale

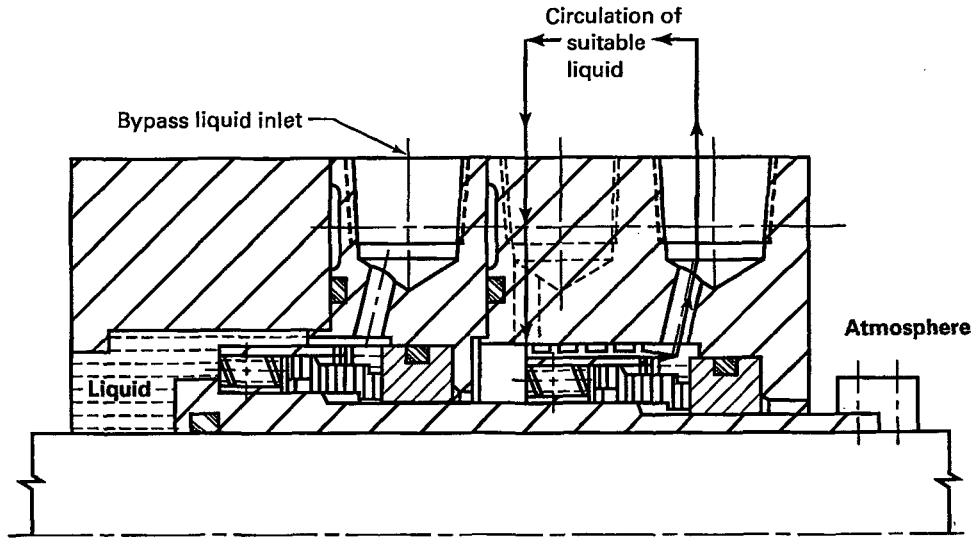

FIG. SG-6 TANDEM SEAL INSTALLATION

TABLE SG-1 COMMON ROTARY SEAL MATERIALS FOR BIOCHEMICAL AND STERILE SERVICE

Component	Materials of Construction
Secondary seals, (O-rings, bellows, and gaskets)	Nitrile [Note (1)] Ethylene propylene [Note (1)] Fluorocarbon [Note (1)]
Primary ring	Carbon Tungsten carbide Silicon carbide
Hardware (retainer, disc, springs, set screws, etc.)	316 Stainless steel
Mating ring	Carbon Ceramic Tungsten carbide Silicon carbide

NOTE:
(1) Compound satisfies FDA requirements (see GR-9) for use with food, beverage, and drug service. Although the FDA does not approve compounds for use in this service, they have sanctioned certain ingredients that are considered nontoxic and noncarcinogenic.

sized reservoir by the seal manufacturer shall be required (see Fig. SG-9). The seal system shall be capable of being cleaned and sterilized in place.

(2) Outboard seals shall be capable of running dry with or without a nitrogen or purified air purge gas. Seal chamber shall be dead-ended. The seal system purge flow rate shall be sized by the seal manufacturer. System shall meet clean and sterilization requirements.

In each case described, if the process liquid will crystallize out on the atmospheric side of the seal, a quench fluid, water or steam, may be required. If a quench fluid cannot be used due to clean room operations of the biotech facility, then a noncontacting gas lubricated seal shall be used. Consult the seal manufacturer.

SG-3.5.6.3 Basic Review of Rotary Sealing Systems

(a) Packing. Packing may be used to seal a rotating or reciprocating shaft. Compression packing is most commonly used to seal a rotating shaft. The seal is formed by the packing being squeezed between the inboard end of a stuffing box and the gland (see Fig. SG-10). A static seal is formed at the inside diameter of the stuffing box and at the ends of the packing rings. The dynamic seal is formed between the packing and shaft or shaft sleeve. Under load, the packing deforms down against the shaft, controlling leakage. Some leakage along the shaft is necessary to cool and lubricate the packing.

The design of the packing utilizes soft resilient braided polytetrafluoroethylene (TFE) rings. Five rings are commonly used. This type of seal is limited to speeds of 1,800 fpm (550 mpm or 10 mps) and pressures to 250 psig [1,724 kPa (gage)]. Packing is not compatible with CIP technology. When the machine is cleaned, the packing shall be replaced.

Copyright ASME International
Provided by IHS under license with ASME
No reproduction or networking permitted without license from IHS
Not for Resale

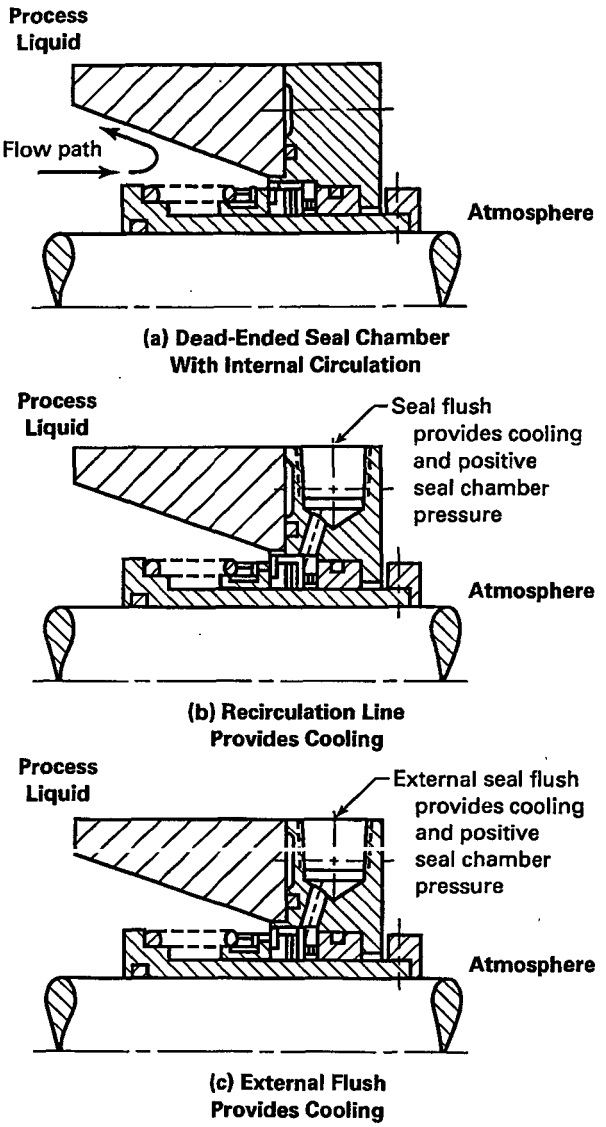

FIG. SG-7 SEAL PIPING AND LUBRICATION PLANS

Floating or automatic types of packings are used to seal reciprocating shafts. These seals take the shape of V-rings, U-cups, and O-rings. Speeds are limited to 150 fps (46 mps) and pressures to 1,000 psig [7,000 kPa (gage)]. TFE is a preferred material of construction. This type of seal is shown in Fig. SG-11.

(b) Lip Seals. Lip seals are another form of low duty radial shaft seals. The design for biochemical and sterile processes requires an open cross-sectional design. Loading to the shaft is accomplished through the design of the elastomer lip, as shown in Fig. SG-12. These seals are limited to a minimum pressure of 5 psia [35 kPa (absolute)] and a maximum of 15 psig [100 kPa (gage)]. Maximum speed capability is 2,000 fps (10 mps). A range of elastomers is available.

(c) Labyrinth Seals. Labyrinth seals consist of one or more knife edges that are attached to either the housing or shaft. Design clearance between the knives and the mating surfaces are maintained at a low, closely controlled value. This type of seal has no speed limit and can be used at high temperatures. Pressure limit is typically low, 5 psig [35 kPa (gage)] per knife edge. Leakage from this device is high, 0.1 to 100 scfm (2.8 to 2,800 Lpm). When leakage of process gas must be prevented, a buffer gas is introduced between two labyrinths, as shown in Fig. SG-13.

SG-4 SPECIAL PROVISIONS FOR SEALS IN BIOPROCESSING SERVICE

SG-4.1 Group 2 (Dynamic Seals)

SG-4.1.1 Type 1 (Reciprocating Valve Stem Seals)

SG-4.1.1.1 Seals for reciprocating valve stems are classified as follows:

(a) Primary Stem Seals. Primary stem seals serve as pressure barriers for process fluids. Such seals shall meet the pressure and temperature requirements of the specified material as outlined in SG-3.1 and the aseptic and sterilizing requirements specified by the owner/user. In addition, they shall meet all of the general requirements for seals outlined in SG-3.2 to SG-3.4.

(b) Secondary Stem Seals. Secondary seals serve as backup to the primary stem seal. These seals shall be designed to serve as pressure barriers for the process and/or sterilizing fluid in case of primary seal failure. Such seals, therefore, shall meet the pressure and temperature requirements of the specified material outlined in SG-3.1. However, such seals do not have to meet any aseptic or sterilizing requirements specified for the primary seal unless the enclosed area between the primary and secondary seals is designed to permit periodic cleaning, draining, and sterilization (see Fig. SG-14).

(c) Other Seals. These seals are not intended to come in contact with the process fluid. They may be commercial in nature and need only to meet respective functional requirements such as withstanding actuating air pressure, unless they have to withstand special ambient temperature requirements. In such cases, special elastomer material has to be selected. However, suitable open areas or drainage ports shall be located in such

Copyright ASME International
Provided by IHS under license with ASME
No reproduction or networking permitted without license from IHS
Not for Resale

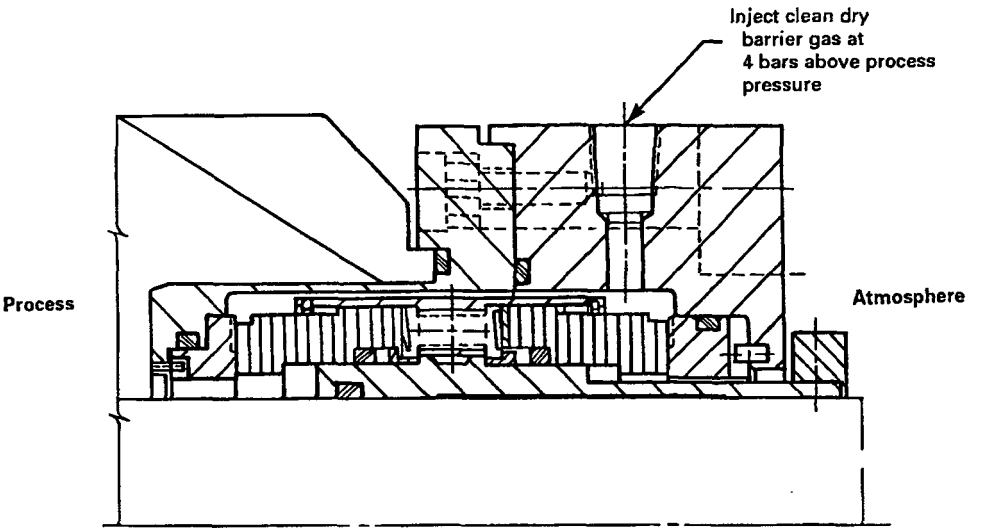

FIG. SG-8 GAS LUBRICATED NONCONTACTING DOUBLE SEAL

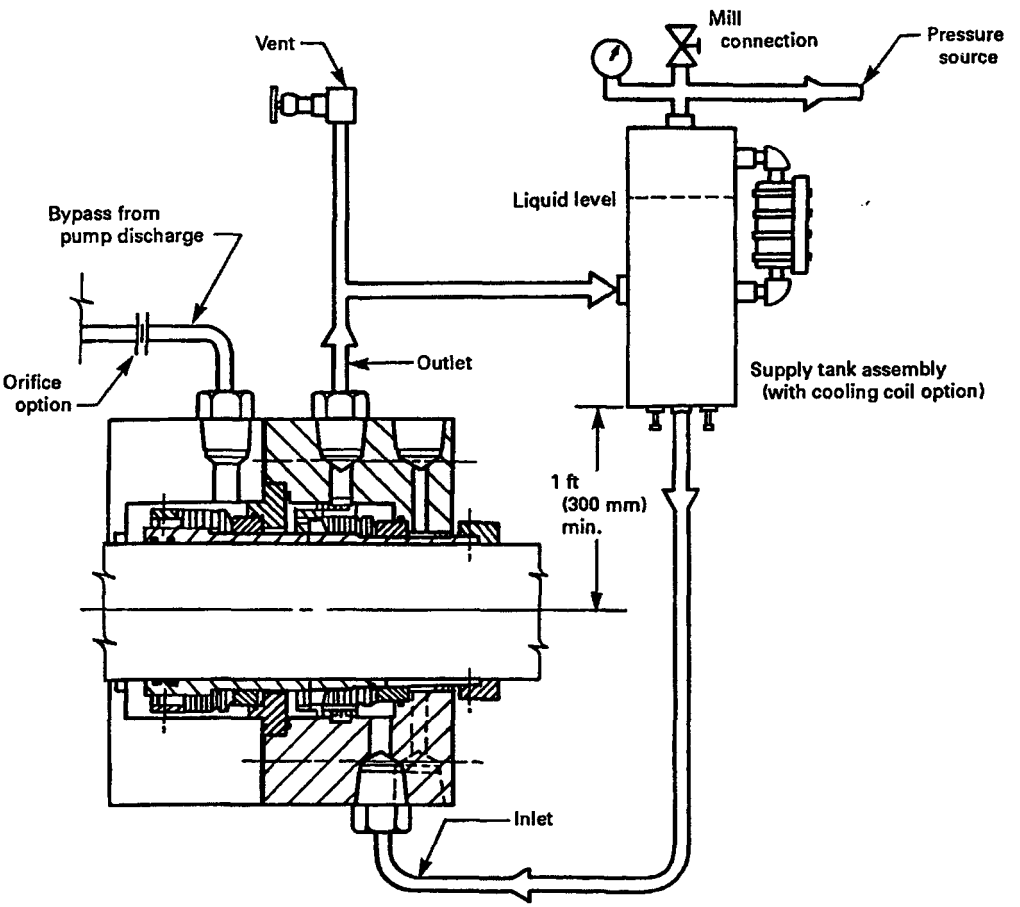

FIG. SG-9 TANDEM SEAL WITH BARRIER SYSTEM

Copyright ASME International
Provided by IHS under license with ASME
No reproduction or networking permitted without license from IHS
Not for Resale

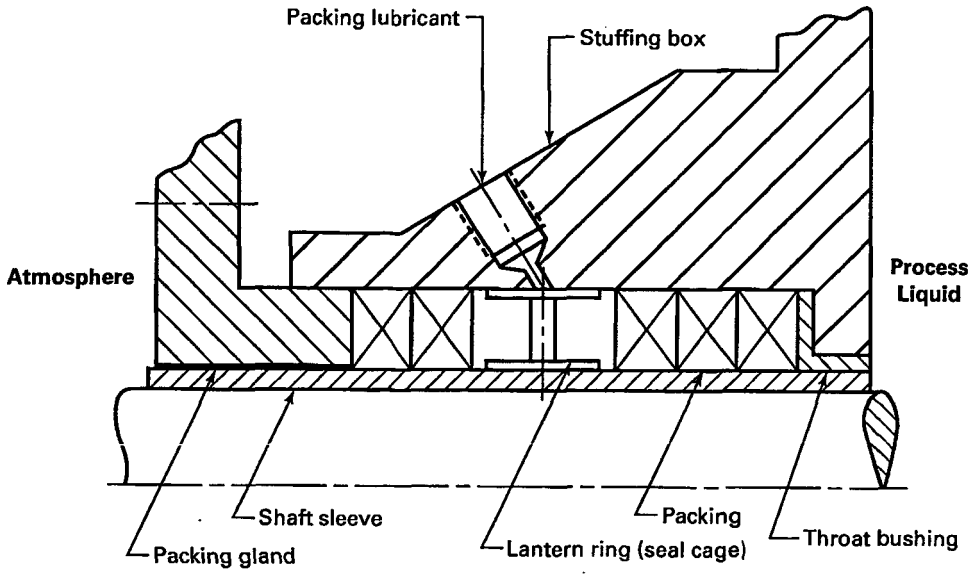

FIG. SG-10 TYPICAL PACKING INSTALLATION

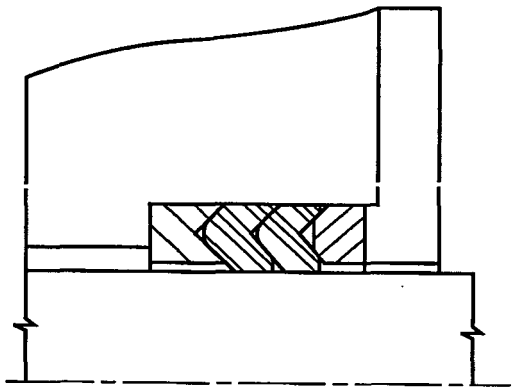

FIG. SG-11 V-RING PACKING FOR RECIPROCATING APPLICATIONS

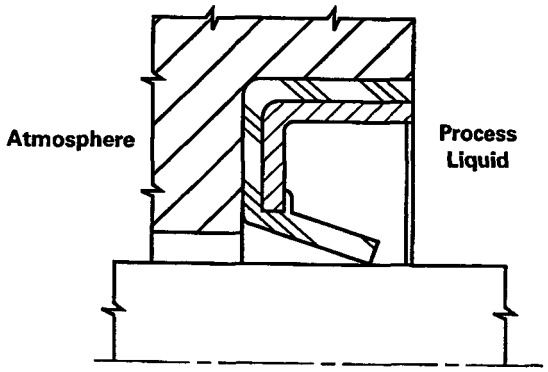

FIG. SG-12 OPEN CROSS-SECTIONAL LIP SEAL

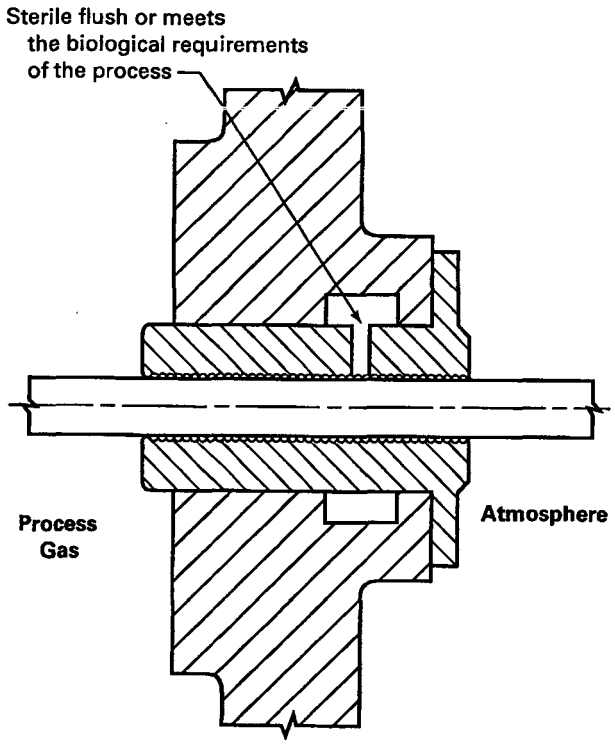

FIG. SG-13 LABYRINTH SEAL

Copyright ASME International
Provided by IHS under license with ASME
No reproduction or networking permitted without license from IHS
Not for Resale

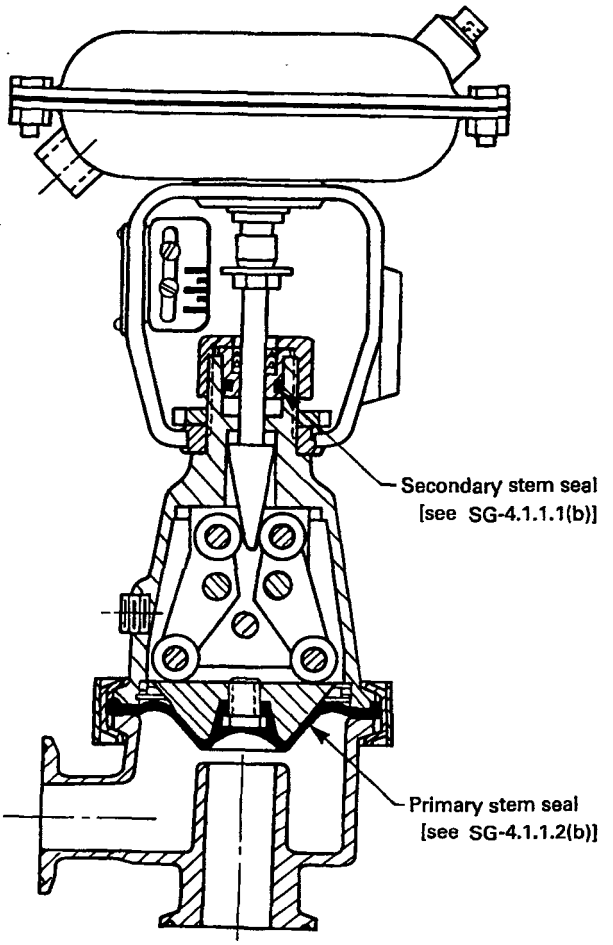

FIG. SG-14 TYPICAL ANGLE VALVE WITH ROLLING DIAPHRAGM AND ORIFICE

a way that contact with the process fluid is avoided in case of primary or secondary stem seal failure.

SG-4.1.1.2 Types of Primary Valve Stem Seals and Their Requirements. Primary valve stem seals as defined in SG-4.1.1.1(a) may be classified as:

(a) Sliding Seals. Seals that are statically retained within a valve component and that undergo sliding motion between the seal and a cooperating surface. Typical examples are O-rings and uniformly loaded sliding seals (see Fig. SG-15).

(b) Nonsliding Seals. Seals that may undergo an elastic or geometric deformation in order to accommodate the stem motion. An example of this type is a convoluted diaphragm whose inner and outer peripheries are statically retained by the stem and valve housing respectively.

(c) Other Nonsliding Seals. Seals that simultaneously fulfill the functions of stem sealing, statically seal part of the body cavity, and selectively serve as a closure member to interrupt the flow of process fluid through the valve. An example of this type is a diaphragm that is statically retained at its outer periphery and is able to seal against a weir or orifice with portions of its central surface area (see Fig. SG-16). For the purposes of this definition, such diaphragms shall have no openings to connect to stems or other devices within the pressurized surface area.

SG-4.1.1.3 Seals, as defined in SG-4.1.1.1 and made of elastomeric or polymeric material, shall meet all the requirements as specified in SG-3.3. **(02)**

Wherever elastomeric or polymeric seals are retained under static compression, adjoining metal surfaces shall be machined to a roughness specified by the seal manufacturer to ensure required performance, and shall meet the requirements of Part SF, Tables SF-3 and SF-4 or SF-5 and SF-6, if surface can become exposed to the system fluid under the normal course of system operation. The compression has to be sufficiently uniform to minimize voids. The surface compression load per m^2 must exceed the stress equal to $E\epsilon$, where E = modulus of elasticity and ϵ = strain (fractional change in original seal thickness). The resultant stress shall not be less than twice the maximum working pressure of the process fluid.

The design of the static retention shall allow for unrestrained volumetric expansion of the given elastomer or polymer during temperature cycles that the material may experience during normal operation.

SG-4.1.1.4 O-ring seals as defined in SG-4.1.1.1(a) shall be fitted in grooves located at a distance of less than $6d$ from the major valve body cavity where the stem is at its point of maximum valve travel, and where d = radial gap between stem and the stem passage within the valve housing in order to meet adequate sterilization requirements. Grooves shall be able to accommodate seal expansion without causing extrusion. **(02)**

SG-4.1.1.5 When made from metal, nonsliding seals [as defined in SG-4.1.1.2(c)] shall meet the surface finish requirements for the valve housing interior on the side facing the process fluid. The portion of the seals being retained under static compression shall have adjoining metal surfaces meeting the requirements of Part SF, Tables SF-3 and SF-4 or SF-5 and SF-6, and compression shall be sufficiently uniform to eliminate voids. The surface compression shall be at least 60% of the yield strength of the retaining metal, in no case less than 70,000 kPa. **(02)**

Copyright ASME International
Provided by IHS under license with ASME
No reproduction or networking permitted without license from IHS
Not for Resale

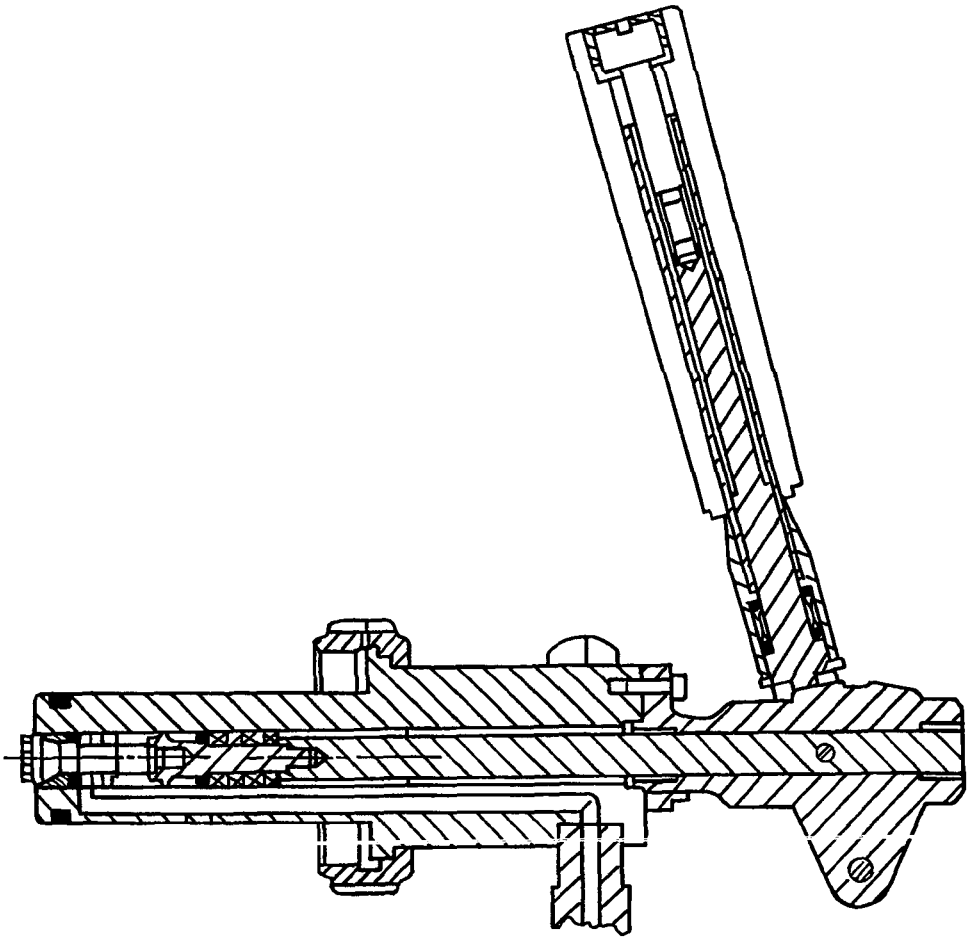

FIG. SG-15 EXAMPLE OF SAMPLING VALVE WITH UNIFORMLY LOADED SLIDING SEAL

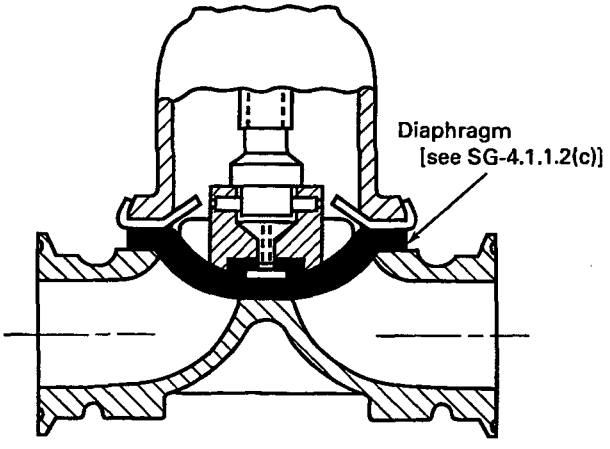

FIG. SG-16 TYPICAL IN-LINE DIAPHRAGM VALVE WITH WEIR

SG-4.1.1.6 Additional Requirements for Elastomeric or Polymeric Seals Used as Valve Closure Members. Materials shall be recommended by the valve manufacturer for the intended service and comply with the UBDR (user's basic design requirements). Maximum allowable pressure and temperature requirements for elastomeric and polymeric valve closure members vary with a manufacturer's design and type of composition; therefore, standard values cannot readily be established. However, they shall withstand a minimum service pressure rating at 100°F (38°C) of 150 psia [1,040 kPa (absolute)] for valve sizes up to 2 in. (50 mm); 75 psi (520 kPa) for valve sizes above 2 in. (50 mm) and including 8 in. (200 mm); and 38 psi (260 kPa) for valve sizes above 8 in. (200 mm).

(a) The integrity of the seal and closure member shall be tested using dry, oil-free air or an inert gas at pressures corresponding to those listed in SG-4.1.1.6.

Copyright ASME International
Provided by IHS under license with ASME
No reproduction or networking permitted without license from IHS
Not for Resale

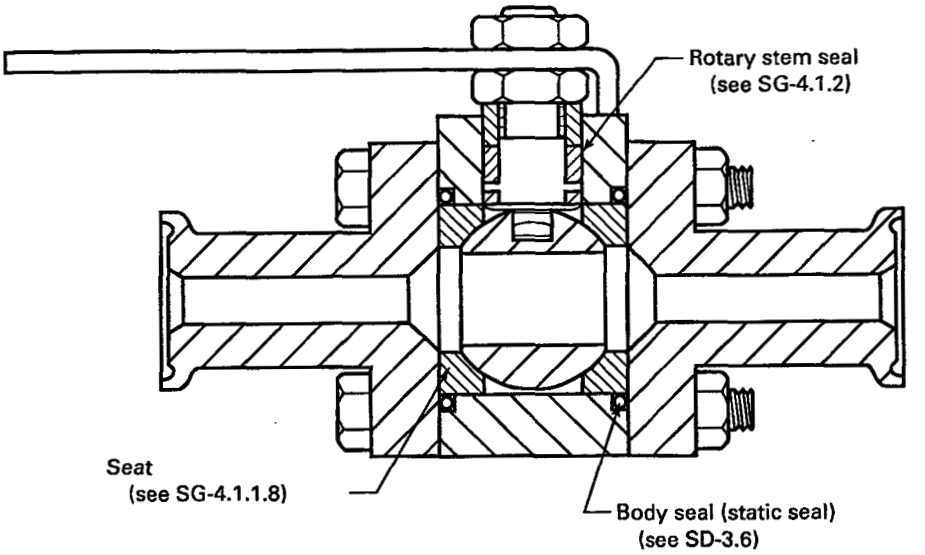

FIG. SG-17 TYPICAL BALL VALVE CONFIGURATION

The pressure shall be applied through the normal valve inlet port. Valves intended for modulating service, or valves having actuating devices of limited force output, shall be subjected to the actual working pressure for the specific valve.

(b) Allowable leakage rates shall be less than those specified under Class VI of ANSI/FCI Standard 70-2-1976 or MSS-SP-88, as applicable. The test duration shall be at least 1 min or sufficient time to establish a constant, measurable leakage rate.

(c) Valves utilized as block valves (outlet exposed to the environment) shall meet the applicable seat leakage requirements.

SG-4.1.1.7 Elastomeric or polymeric diaphragms used as valve closure members shall meet the requirements of SG-4.1.1.6 and the following:

(a) The integrity of the pressure boundary between that portion of the diaphragm serving as a static seal to the valve exterior and the valve housing shall be tested by applying dry, oil-free air or an inert gas to the body cavity at pressures corresponding to 1.2 times those listed in Section 10.3 of MSS-SP-88.

(b) Diaphragms may be marked in accordance with Section 12.3 of MSS-SP-88, but only on those portions of the diaphragm that are exposed beyond the sealing portion of the housing.

SG-4.1.1.8 Elastomeric or polymeric seals used as ball or butterfly valve closure members shall meet the requirements of SG-4.1.1.6. Ball valve closure members (seats) shall be considered static seals.

(a) Special consideration shall be given to cleaning the body cavity between adjacent seals (seats). Valve seals shall be arranged so that the internal body cavity will be self-draining when properly installed (see Fig. SG-17).

(b) Ball or butterfly valve closure members shall not be pressure dependent. Seal integrity shall be tested using dry, oil-free air or an inert gas at a pressure of 50–80 psi (345–550 kPa) and meet the leakage criteria of SG-4.1.1.6(b).

SG-4.1.2 Type 2 (Rotary Valve Stem Seals). This type shall meet all requirements of SG-4.1.1.2.

Copyright ASME International
Provided by IHS under license with ASME
No reproduction or networking permitted without license from IHS
Not for Resale

NONMANDATORY APPENDIX A
COMMENTARY: SLAG

(02)

(a) Inert gas welding processes do not introduce slag.

(b) Stainless steels, especially type 316L, typically produce a small round black spot at the termination of the weld bead, on the OD, ID, or both. This spot is generally unavoidable and has been found to be acceptable in most process applications.

(c) Slag in or on welds may be the result of faulty weld preparation, such as contamination, poor cleaning, or faulty tacking procedures.

(d) Slag may also result from melting base metals of certain compositions that include elements not normally reported on Material Test Reports. These elements include, but are not limited to, aluminum, calcium, cerium, and zirconium.

(e) The owner/user and contractor should investigate the origin of any slag found during weld examination, determine its acceptability, and agree on any corrective action.

(f) The inert gas welding processes themselves do not introduce a slag because no fluxing materials are used (see GR-10 and AWS 3.0).

Copyright ASME International
Provided by IHS under license with ASME
No reproduction or networking permitted without license from IHS
Not for Resale

(02)

INDEX

Acceptance criteria, MJ-6, Fig. MJ-1, MJ-7.2.3, Tables SF-1, SF-3, SF-5, SF-7
Annealing, GR-10
Arc strike, GR-10, MJ-6.4.7, MJ-6.4.9
Arc welding processes, MJ-3.1
Autogenous weld, GR-10
Automatic welding, GR-10, MJ-3.2, MJ-4.4, MJ-7.2.3

Barrier fluid, SG-3.5.2, SG-3.5.3.2, SG-3.5.6.2, Fig. SG-5
Bioburden, SG-3.1.3
Biocompatability, SG-3.3.1
Blind welds, SD-3.5.3, MJ-7.2.3
Borescope/Borescopic examination, MJ-6.4, MJ-7.2.3, MJ-7.4, SF-7(a)
Burnthrough, MJ-6.4.9
Butt weld/joint, GR-10, SD-3.7.1, SD-4.7.4(a), SD-4.7.5(a), Fig. SD-18(a), Fig. SD-19(a), MJ-4.4, MJ-6.4.4

Cartridge seal, SG-3.5.4
Cavitation—seal, SG-3.1.4
Certification of compliance, SG-3.4.1, MJ-10(c)
Classification, SF-6, SF-7
Cleaning—seals, SG-3.1.6
Clean-in-place, SG-3.2.1
Clean-out-of-place, SG-3.2.1
Cluster porosity, GR-10
Complete weld penetration, MJ-4.1
Concavity, GR-10, MJ-6.4.2, MJ-6.4.9, Fig. MJ-1(c) and (d)
Consumable insert, GR-10, SD-4.5.2(a), MJ-5
Continuous weld, Fig. SD-17(d)
Convexity, GR-10, MJ-6.4.3, MJ-6.4.9, Fig. MJ-1(f)
Cracks, GR-10, SD-4.5.2(a), MJ-6.1, MJ-6.4.9
Crater, GR-10
Crater cracks, GR-10, MJ-6.4.9
Crevices, SD-4.5.2(g), SG-3.3.2
Corrosion resistance—seal, SG-3.2.2, SG-3.3.1

Dead spaces, SG-3.3.3
Defects, GR-10, MJ-6.4.9
Diaphragm, SG-2.2, SG-4.1.1.2, SG-4.1.1.7
Direct visual inspection, MJ-7.2.3
Discoloration, GR-10, MJ-6.4.5, MJ-6.4.9, SF-5(b)
Discontinuity(ies), GR-10, MJ-6.1
Documentation, MJ-10
Double seals, SG-3.5.3.2, SG-3.5.6.2
Downslope, GR-10
Dross, GR-10
Dual seals, SG-3.5.3.2
Dynamic seal, SG-4.1

Electron beam welding, MJ-3.1, MJ-3.2
Examination/examiner, GR-4, MJ-7

Fabricated components with welds, DT-2
Fabrication, SD-3.5
  fittings, Fig. SD-18, DT-2
  heat exchangers, SD-4.9
  hubs, SD-4.8.3(a), SD-4.8.5(a)
  impellers, SD-4.8.1(m), SD-4.8.5(a) and (e)
  keyways, SD-4.8.3(b)
  pads, plates, SD-4.7.1(d)
  piping/pipes, SD-3.11.7, Part MJ
  pressure vessels, SD-4.7.1(b), Part MJ
  pumps, SD-4.5.2(a)
  tanks, SD-4.7.1(d), Part MJ
  tubing/tubes, Part MJ
  valves, SD-3.11.6, SD-4.6.1(a)
Field welding, SD-3.5.1
Filler material/metal, MJ-5, MJ-8.3(b)
Fit-up, MJ-6.4.1
Full penetration, GR-10, SD-4.7.5(a), Fig. SD-18(c), MJ-6.4.4
Fusion, GR-10
Fusion welding, GR-10

Gas tungsten-arc welding (GTAW), GR-10, MJ-3.2
General provisions for seals, SG-3

Heat-affected zone, GR-10, MJ-6.4.5
High energy beam processes, MJ-3.1, MJ-3.2
Hydrostatic testing, MJ-7.5.2, MJ-7.5.3

Icicles, GR-10, MJ-6.4.9
Incomplete fusion, GR-10, MJ-6.4.9
Incomplete penetration, GR-10, MJ-6.4.9, Fig. MJ-1(e)
Indication, GR-10
Inert-gas welding processes, MJ-3.2

Copyright ASME International
Provided by IHS under license with ASME
No reproduction or networking permitted without license from IHS
Not for Resale

Inserts, see *consumable insert*
Inspection/inspector, GR-3, GR-4, MJ-6.4.8, MJ-7, SF-7

Joint penetration, GR-10

Labyrinth seal, SG-3.5.6.3
Lack of fusion, see *incomplete fusion*
Lack of fusion after reflow, GR-10, MJ-6.4.9
Lack of penetration, see *incomplete penetration*
Laminations, GR-10
Lap joint welds, SD-4.7.4(a)
Laser beam welding, MJ-3.1, MJ-3.2
Lathe welding, MJ-4.4
Leakage rate-seal, SG-3.1.2, SG-4.1.6, SG-4.1.1.8
Linear porosity, GR-10
Lip seal, SG-3.5.6.3
Liquid penetrant examination, MJ-7.2.1, MJ-7.2.3
Longitudinal weld, Table SF-1, Table SF-7
Lubricated seals, SG-3.5.2

Machine welding, GR-10, MJ-3.2, MJ-4.4, MJ-7.2.3
Manual welding, GR-10, MJ-4.4
Materials of constructions—seal, SG-3.3.1, SG-3.5.5, Table SG-1, SG-4.1.1.6
Material test reports (MTRs), MJ-10(c)
Mechanical seal, SG-2.1
Misalignment (mismatch), GR-10, MJ-6.1, MJ-6.4.1, Fig. MJ-1(b)
Multiple seals, SG-2.3

Nonaccessible welds, MJ-7.2.3
Non-sliding seal, SG-4.1.1.2

Orbital (tube) welding, GR-10, MJ-4.4, MJ-7.2.3
O-ring seal, SG-4.1.1.4, SG-2.1
Outboard seal, SG-3.5.6.2
Outside diameter, DT-6, DT-8
Overlap, GR-10
Oxides, SF-5(b)

Packing, SG-3.5.6.3, SG-2.1
Particle generation-seal, SG-3.3.1
Passivation, SG-3.1.8
Performance-seal, SG-3.1
Permeation resistance, SG-3.3.1
Personnel (examination), MJ-7.2.1, MJ-7.2.2, MJ-7.2.3
Plasma arc welding, MJ-3.2
Pneumatic testing, MJ-7.5.2, MJ-7.5.3
Porosity, GR-10, MJ-6.1, MJ-6.4.9, Table SF-1, Table SF-3, Table SF-7
Primary stem seal, SG-4.1.1.1
Procedure Qualification Record (PQR), MJ-10(a)
Protrusions, SF-5(b)
Purge gas, MJ-4.1, MJ-7.2.3, MJ-8.3(a)

Radiographic examination, MJ-7.2.1, MJ-7.2.3
Random examination/inspection, MJ-7.2.3
Records, MJ-7.6
Reflow, GR-10, MJ-6.4.9
Reinforcement, GR-10
Rewelding, MJ-6.4.9
Rotary seal, SG-3.5.6.3

Sample welds, MJ-7.2.3
Seal arrangements, SG-3.5.3
Seal classes, SG-2
Seal weld, GR-10, SD-3.8(i), SD-4.9.1(g)(2)
Secondary stem seal, SG-4.1.1.1
Section IX, Part MJ
Semi-automatic arc welding, GR-10
Service pressure-seal, SG-3.1.2
Service temperature-seal, SG-3.1.1
Single seal, SG-3.5.3.1, SG-3.5.6.1
Slag, GR-10, SF-5(a) and (b), Table SF-1, Table SF-3, Table SF-5, Table SF-7
Sliding seal, SG-4.1.1.2
Socket welds, Fig. SD-3(f), MJ-4.1
Spatter, GR-10
Special method examinations, MJ-7.2.2
Square butt joints, MJ-4.4
Steam-in-place, SG-3.2.2
Sterilization procedure, SG-3.1.5
Stitch weld (intermittent weld), Fig. SD-17(e)
Suckback, Fig. MJ-1(d), see also *concavity*
Supplementary examinations, MJ-7.2.3, MJ-7.4
Surface finish, SG-3.3.1, SG-3.5.5, SF-1, SF-2, SF-5, SF-6, SF-7, SF-8

Tack welds, MJ-6.4.4
Tandem seals, SG-3.5.3.2, SG-3.5.6.2
Testing, MJ-7.5
Tungsten inclusions, GR-10, MJ-6.4.6

Ultrasonic examination, MJ-7.2.1, MJ-7.2.3
Undercut, GR-10, MJ-6.4.9, SF-5(b)
Underfill, GR-10
Uniformly scattered porosity, GR-10

Visual examination, MJ-7.2.1, MJ-7.2.2, MJ-7.2.3, SF-7(a)
Voids, MJ-6.1

Wall thickness, DT-5, DT-6, DT-8

Copyright ASME International
Provided by IHS under license with ASME
No reproduction or networking permitted without license from IHS
Not for Resale

Weld acceptance criteria, MJ-6
Weld and finish samples, MJ-2.6
Weld bead meander, MJ-6.4.8, Fig. MJ-1(i)
Weld conditioning, SF-5(b)
Weld finishes, SF-6
Weld fittings, SD-3.7.5, Fig. SD-18, Part DT
Weld inspection log, MJ-10(b)
Weld joint design, GR-10
Weld maps, MJ-10(b)
Weld marks, SD-3.8(d)
Weld neck flanges, Fig. SD-3(d), SD-4.7.4(b)
Weld penetration, MJ-4.1, MJ-6.4.4
Weld profiles, Fig. MJ-1
Weld seam, SD-5.4
Weld width, MJ-6.4.8, Fig. MJ-1(g), Fig. MJ-1(h)
Welded connections, SD-3.11.6
Welded product contact surfaces, SD-4.7.4(a)
Welder identification, MJ-10(b)
Welder Performance Qualification (WPQ), MJ-9, MJ-10(a)
Welding dissimilar materials, SD-4.7.1(d)
Welding ends, DT-8, DT-9
Welding operator, GR-10
Welding Operator Performance Qualification (WOPQ), MJ-9, MJ-10(a)
Welding Procedure Specification (WPS), MJ-10(a)
Welding procedures, SD-6, MJ-3.2, MJ-6.1, MJ-8
Welding wire, MJ-5

Copyright ASME International
Provided by IHS under license with ASME
No reproduction or networking permitted without license from IHS
Not for Resale



ISBN 0-7918-2766-6

9 780791 827666

A14302

Copyright ASME International
Provided by IHS under license with ASME
No reproduction or networking permitted without license from IHS

Not for Resale