STD.ASME B96.1-ENGL 1999 0759670 0616283 656

ASME B96.1-1999
(Revision of ASME B96.1-1993)

WELDED ALUMINUM-ALLOY STORAGE TANKS

AN AMERICAN NATIONAL STANDARD

The American Society of Mechanical Engineers

Copyright ASME International
Provided by IHS under license with ASME
No reproduction or networking permitted without license from IHS

Not for Resale

STD.ASME B96.1-ENGL 1999 ■ 0759670 0616284 592 ■



The American Society of Mechanical Engineers

AN AMERICAN NATIONAL STANDARD

WELDED ALUMINUM-ALLOY STORAGE TANKS

ASME B96.1-1999

(Revision of ASME B96.1-1993)

Copyright ASME International
Provided by IHS under license with ASME
No reproduction or networking permitted without license from IHS

Not for Resale

Date of Issuance: March 31, 2000

The 1999 edition of this Standard is being issued with an automatic addenda subscription service. The use of addenda allows revisions made in response to public review comments or committee actions to be published on a regular yearly basis; revisions published in addenda will become effective 6 months after the Date of Issuance of the addenda. The next edition of this Standard is scheduled for publication in 2004.

ASME issues written replies to inquiries concerning interpretations of technical aspects of this Standard. The interpretations will be included with the above addenda service.

ASME is the registered trademark of The American Society of Mechanical Engineers.

This code or standard was developed under procedures accredited as meeting the criteria for American National Standards. The Standards Committee that approved the code or standard was balanced to assure that individuals from competent and concerned interests have had an opportunity to participate. The proposed code or standard was made available for public review and comment, which provides an opportunity for additional public input from industry, academia, regulatory agencies, and the public-at-large.

ASME does not "approve," "rate," or "endorse" any item, construction, proprietary device, or activity.

ASME does not take any position with respect to the validity of any patent rights asserted in connection with any items mentioned in this document, and does not undertake to insure anyone utilizing a standard against liability for infringement of any applicable letters patent, nor assume any such liability. Users of a code or standard are expressly advised that determination of the validity of any such patent rights, and the risk of infringement of such rights, is entirely their own responsibility.

Participation by federal agency representative(s) or person(s) affiliated with industry is not to be interpreted as government or industry endorsement of this code or standard.

ASME accepts responsibility for only those interpretations of this document issued in accordance with the established ASME procedures and policies, which precludes the issuance of interpretations by individuals.

No part of this document may be reproduced in any form,
in an electronic retrieval system or otherwise,
without the prior written permission of the publisher.

The American Society of Mechanical Engineers
Three Park Avenue, New York, NY 10016-5990

Copyright © 2000 by
THE AMERICAN SOCIETY OF MECHANICAL ENGINEERS
All Rights Reserved
Printed in U.S.A.

Copyright ASME International
Provided by IHS under license with ASME
No reproduction or networking permitted without license from IHS

Not for Resale

FOREWORD (99)

The original 1967 edition of this Standard was based on an American Petroleum Institute document, API Standard 12G, Specification for Welded Aluminum-Alloy Storage Tanks. API Standard 12G was published as a tentative edition in March 1957 and was withdrawn by API in November 1959. On August 21, 1962, the Chemical Manufacturers Association became secretariat for American National Standards Committee on Welded Aluminum-Alloy Field Erected Storage Tanks, B96. Additional revisions were published in 1973 and 1981.

On June 20, 1983, American National Standards Committee B96 was disbanded, and the secretariat for standards under that Committee was reassigned from the Chemical Manufacturers Association to ASME. The newly formed ASME B96 Committee had its first organizational meeting on March 4, 1985.

The ASME/ANSI B96.1-1986 Standard contained major revisions to all areas relating to design, fabrication, materials (including the basis for establishing allowable stress values), inspection, testing, and referenced standards and codes.

The 1989 edition of B96.1 included the 1986 edition and subsequent revisions issued in the Addenda designated ASME/ANSI B96.1a-1988.

Subsequently, ASME B96.1-1993 added rules for the following:

(a) design and testing for tanks having an internal gas pressure that produces a net uplift at the base of the tank. The maximum permitted pressure is 1.0 psig.

(b) design for overturning due to wind.

In addition, changes were implemented to classify tanks on the basis of the magnitude of internal pressure, clarify the application of corrosion allowance, establish responsibility for sizing pressure and vacuum-relief devices, and update table of acceptable referenced standards. Additional revisions were made to update and/or correct various paragraphs, figures, and tables.

The 1999 edition of B96.1 includes the 1993 edition and additional revisions to areas relating to the scope, materials, design, welding procedures, and welder qualifications. ASME B96.1-1999 was approved by the American National Standards Institute on February 9, 1999.

This edition or revisions thereto may be used beginning with the date of publication printed on the copyright page. Revisions published in Addenda become the requirement for compliance six months after the date of issuance, except for equipment or services contracted for prior to the end of the six-month period.

Copyright ASME International
Provided by IHS under license with ASME
No reproduction or networking permitted without license from IHS
Not for Resale

ASME STANDARDS COMMITTEE B96
Welded Aluminum-Alloy Storage Tanks

(99)

(The following is the roster of the Committee at the time of approval of this Standard.)

OFFICERS

J. R. Kissell, *Chair*
C. J. Pieper, *Vice Chair*
J. G. Labrador, *Secretary*

COMMITTEE PERSONNEL

J. R. Buzek, AEC Engineers, Minneapolis, Minnesota
J. R. Kissell, TGB, Hillsborough, North Carolina
W. T. Lore, Jr., Union Carbide Corp., South Charleston, West Virginia
P. E. Myers, Chevron Products, Richmond, California
C. J. Pieper, Chicago Bridge & Iron Co., Plainfield, Illinois
C. H. Sturgeon, Consultant, Maryland Heights, Missouri

Previous page is blank

Copyright ASME International
Provided by IHS under license with ASME
No reproduction or networking permitted without license from IHS
Not for Resale

CONTENTS

(99)

Foreword		iii
Standards Committee Roster		v
Summary of Changes		xi
Section 1	**Scope**	1
1.1	General	1
1.2	Tank Classes for Internal Pressure	1
1.3	Limitations	2
1.4	Tank Venting	2
1.5	Compliance	2
Section 2	**Materials**	3
2.1	Acceptable Alloys	3
2.2	Selection of Alloys	3
2.3	Clad Alloys	3
2.4	Plate and Sheet	3
2.5	Pipe and Tube	3
2.6	Couplings	3
2.7	Flanges	3
2.8	Forgings	5
2.9	Welding Rods and Electrodes	5
2.10	Bolting	5
2.11	Rivets	5
Section 3	**Design**	7
3.1	Joint Design	7
3.2	Bottom Design	10
3.3	Shell Design	11
3.4	Wind Girder Design	18
3.5	Roof Design	28
3.6	Connections and Appurtenances	38
3.7	Design for Internal Pressure for Class 2 Tanks	42
3.8	Design for Internal Pressure for Class 3 Tanks	43
3.9	Wind Load on Class 1 and Class 2 Tanks	47
Section 4	**Fabrication**	53
4.1	Fabricating	53
4.2	Straightening and Forming	53
4.3	Finish of Plate Edges	53
4.4	Shaping of Shell Plates	53
4.5	Marking	53
4.6	Shipping	53
Section 5	**Erection**	55
5.1	General	55
5.2	Welding	55

Previous page is blank

Copyright ASME International
Provided by IHS under license with ASME
No reproduction or networking permitted without license from IHS
Not for Resale

Section 6	**Inspection, Examination, and Testing**	57
6.1	Inspection	57
6.2	Examination of Welds	57
6.3	Radiographic Methods	57
6.4	Testing	59
Section 7	**Welding Procedures and Welder Qualifications**	61
7.1	General	61
7.2	Welding Procedure Qualification Tests	61
7.3	Welder Qualification	61
Section 8	**Marking**	63
8.1	Nameplate	63
8.2	Attachment to Tank	63
8.3	Fabricator and Erector	63
8.4	Responsibility	63
Section 9	**Shop-Assembled Storage Tanks**	65
9.1	General	65
9.2	Materials	65
9.3	Design	65
9.4	Fabrication	66
9.5	Welding Procedures and Welder Qualifications	66
9.6	Method of Inspecting Shell Joints	66
9.7	Shop-Assembled Tanks	66
9.8	Marking	66
Section 10	**References**	67
10.1	General	67

Figures

1	Typical Vertical Joints in Shell	8
2	Typical Horizontal Joints in Shell	8
3	Typical Roof Joints	9
4	Typical Bottom Joints	9
5	Method for Preparing Lap-Welded Bottom Plates Under Tank Shell	10
6	Values for t_b to Be Used in Fig. 10	14
7	Shell Nozzles	16
8	Cover Plate Thickness for Shell Manholes and Cleanout Fittings	19
9	Flange Thickness for Shell Manholes and Cleanout Fittings	20
10	Flush-Type Cleanout Fittings	21
11	Flush-Type Cleanout Fitting Supports	23
12	Stresses on Roof Plates	29
13	Shell Manholes	40
14	Roof Manholes	44
15	Flanged Roof Nozzles	45
16	Screwed Roof Nozzles	45
17	Welded Drawoff Elbow	48
18	Drawoff Sump	49
19	Scaffold Cable Support	49
20	Participating Compression Area in Roof-to-Shell Joints for Class 2 Tanks	50
21	Permissible Details and Participating Compression Region for Class 3 Tanks	52
22	Nameplate for Identifying Tanks	64

Copyright ASME International
Provided by IHS under license with ASME
No reproduction or networking permitted without license from IHS
Not for Resale

Tables

1	Material Specifications	4
2	Shell-to-Bottom Joint	10
3	Bottom Plate Thickness Under Shell	11
4	Allowable Tensile Stresses for Shell Construction	12
5	Allowable Shear Stresses for Fillet Welds	13
6	Nozzles — Weld Sizes	15
7	Flush-Type Cleanout Fittings	25
8	Allowable Tensile Stresses for Bolts for Tank Connections	26
9	Allowable Tensile Stresses for Roof Plates	30
10	Allowable Tensile Stresses for Roof Supports	31
11	Allowable Axial Compression Stresses for Roof Supports	32
12	Allowable Bending Stresses for Roof Supports	34
13	Allowable Shear Stresses for Roof Supports	36
14	Allowable Shear and Tension Stresses for Bolts and Rivets for Roof Supports	38
15	Allowable Bearing Stresses for Bolts, Rivets, and Pins for Roof Supports	39
16	Shell Manholes	42
17	Flanged Nozzles	43
18	Roof Manholes	45
19	Flanged Roof Nozzles	46
20	Screwed Roof Nozzles	46
21	Welded Drawoff Elbow	48
22	Yield Strength Values for Use in Sections 3.7 and 3.8	51
23	Allowable Stresses for Anchor Bolts Resisting Internal Pressure	51
24	Heating Time at Temperature Preparatory to Forming Aluminum Alloys	54

Nonmandatory Appendices

A	Useful Design Data	69
B	Guide to the Selection of Filler Metals	73
C	Basis for Allowable Stress Values	79
D	Compatibility of Metals and Protection Against Corrosion	83
E	Recommended Practice for Foundations	85
F	Quality System Program	89

Copyright ASME International
Provided by IHS under license with ASME
No reproduction or networking permitted without license from IHS
Not for Resale

ASME B96.1-1999
SUMMARY OF CHANGES

The 1999 edition of ASME B96.1 includes editorial changes, revisions, and the following changes identified by **(99)**.

Page	*Location*	*Change*
iii	Foreword	Revised
v	Committee Roster	Updated
vii–ix	Contents	Revised and updated
1–3	1.1.1	Footnote added
	1.1.2	Editorially revised
	1.1.6	Editorially revised
	1.1.8	Added
	1.2.1	Editorially revised
	1.2.2	Editorially revised
	1.3.3	Revised
	2.4	Editorially revised
	2.6	Editorially revised
	2.7.1	Editorially revised
5	2.9	Editorially revised
	2.10.1	Editorially revised
	2.10.2	Editorially revised
	2.11	(1) Editorially revised (2) Footnote deleted
7, 10	3.1.3	Editorially revised
	3.1.4	Subparagraphs (b), (c), and (g)(3) editorially revised
	3.2	Editorially revised
11	3.2.2(f)	Editorially revised
13	3.3.3(b)	Editorially revised
	3.3.4	(1) Subparagraph (a) revised (2) Subparagraphs (c) and (d) added

Previous page is blank

Copyright ASME International
Provided by IHS under license with ASME
No reproduction or networking permitted without license from IHS
Not for Resale

Page	*Location*	*Change*
18	3.3.5(h)	Subparagraphs (2) and (3) editorially revised
27	3.4.8(a)	Footnote reference and text editorially revised
28	3.5.1	Revised
	3.5.2(b)	Revised
31	Table 10	Revised
	3.5.6	Added
32–39	Table 11	Revised in its entirety
	Table 12	Revised in its entirety
	Table 13	Revised in its entirety
	Table 14	Revised
	3.5.7	Redesignated from former 3.5.6 and revised
	Table 15	Revised
	3.6.3(b)	Editorially revised
41	3.6.8, 3.6.9	Footnote reference editorially revised
43	3.7.4(b)	Revised
46	Table 20	Revised
47	3.9.4	Revised
59	6.4.3(a)	Revised
61	7.1.2	Editorially revised
67, 68	Section 10	Revised in its entirety
72	Table A3	Revised
79–81	C2	Revised
	C4.1	Editorially revised
	C5	Revised
	C6	Editorially revised
	C8	Revised
89	Nonmandatory Appendix F	Added

Copyright ASME International
Provided by IHS under license with ASME
No reproduction or networking permitted without license from IHS
Not for Resale

WELDED ALUMINUM-ALLOY STORAGE TANKS

Section 1
Scope

1.1 General

(99) **1.1.1** This Standard covers the design, materials, fabrication, erection, inspection, and testing requirements for welded aluminum-alloy,[1] field-erected or shop-fabricated, aboveground, vertical, cylindrical, flat bottom, open- or closed-top tanks storing liquids under pressures approximating atmospheric pressure at ambient temperatures (see also paras. 1.2 and 1.3).

(99) **1.1.2** This Standard is intended to provide the chemical industry and other users with tanks of safe design for the containment of fluids within the design limits. It does not present a fixed series of allowable tank sizes, but rather it is intended to permit the selection of whatever size tank best meets the purchaser's needs. This Standard is for the convenience, reference, and mutual understanding of designers, purchasers, manufacturers, erectors, and inspectors of tanks constructed in accordance with its requirements.

1.1.3 The design of tanks in accordance with this Standard shall include provisions for anchoring the tank, when necessary, to resist the effects of internal pressure (if any) and wind overturning moment. Rules for evaluating the need for anchors for Class 1 and Class 2 tanks (see para. 1.2) and some minimum requirements for the design of the anchors are provided in para. 3.9. Rules for the design of anchors and counterbalancing weights for Class 3 tanks are included in para. 3.8.

1.1.4 The design formulas in this Standard contain no allowances for corrosion. Corrosion allowances stated by the purchaser shall be added by the manufacturer to the calculated thickness and, where specified by the purchaser, to other thicknesses (e.g., anchor bolts).

1.1.5 Minor variations in design or construction details that are specified as an exception or extension, agreed to by both the manufacturer and the purchaser, and known not to detract from the inherent strength of the tank or appurtenances, are allowable within the scope of this Standard. Where the Standard does not cover all details of design and construction, the manufacturer, subject to the approval of the purchaser, shall provide details and construction that will be as safe as those provided by this Standard.

1.1.6 See Section 10, References, for the applicable edition of standards, specifications, and codes referred to by this Standard. (99)

1.1.7 Foundation design and construction details are not part of this Standard. However, because of the importance of adequate foundations to the safety, strength, and useful life of field-erected storage tanks, see Appendix E for recommended practice for foundations.

1.1.8 Requirements relating to Quality System Programs are described in nonmandatory Appendix F. (99)

1.2 Tank Classes for Internal Pressure

1.2.1 Class 1 Tanks. Open-top tanks having any diameter and fixed roof tanks not exceeding 100 ft in diameter and having an internal design pressure not exceeding 0.5 oz/in.^{2} are designated as Class 1 tanks. (99)

1.2.2 Class 2 Tanks. Tanks not exceeding 100 ft in diameter and having an internal design pressure greater than 0.5 oz/in.^{2} and tanks greater than 100 ft in diameter having any internal pressure are designated as Class 2 tanks. In no case, however, is the internal design pressure allowed to exceed a value that produces an uplift force that equals the weight of the shell plus the roof plus any framing supported by the shell or (99)

(99) [1] Throughout this Standard, the term "aluminum alloy" includes aluminum as well as aluminum alloys.

Copyright ASME International
Provided by IHS under license with ASME
No reproduction or networking permitted without license from IHS
Not for Resale

roof. Rules for internal pressure design of Class 2 tanks are given in para. 3.7.

1.2.3 Class 3 Tanks. All tanks where the internal design pressure produces an uplift force greater than the total weight of the tank shell, roof, and roof framing are designated as Class 3 tanks. Rules for internal pressure design of these tanks are given in para. 3.8. The maximum internal design pressure permitted is 1.0 psig.

1.3 Limitations

1.3.1 For tanks 100 ft in diameter or smaller and having an external design pressure exceeding 0.5 oz/in.^{2} and for tanks larger in diameter than 100 ft having any external design pressure, additional design considerations, which are not included in this Standard, are the responsibility of the tank designer.

1.3.2 The limitation of temperature to "ambient" (see para. 1.1.1) is not intended to preclude the use of these tanks at temperatures above ambient temperature. Allowable stresses for commonly used aluminum alloys are tabulated in this Standard for temperatures to 400°F maximum. However, when the design temperature exceeds 150°F, additional design considerations, which are not included in this Standard, are the responsibility of the tank designer.

1.3.3 Design rules in this Standard do not consider fatigue effects from cyclic loadings. However, the user is cautioned that supported cone roofs meeting the minimum requirements of this Standard are more susceptible to low-cycle fatigue failures at the roof-to-top angle weld than are self-supporting roofs, particularly self-supporting dome roofs, when the internal operating pressure creates an uplift force exceeding the weight of the roof plates. Also, supported cone roofs for tanks larger in diameter than 50 ft and meeting the minimum requirements of this Standard may be prone to fatigue failures at the roof-to-top angle weld and at single-welded lap seams joining roof plates due to wind-induced undulations under steady wind speeds as low as 25 mph to 30 mph. (99)

1.4 Tank Venting

It is the responsibility of the user to size pressure- and vacuum-relief devices to ensure that the internal and external design pressures are not exceeded.

1.5 Compliance

The manufacturer is responsible for complying with all of the provisions of this Standard. The purchaser may perform or have performed an inspection to verify that materials, details of fabrication and construction, and testing comply with the requirements of this Standard.

Copyright ASME International
Provided by IHS under license with ASME
No reproduction or networking permitted without license from IHS
Not for Resale

Section 2
Materials

2.1 Acceptable Alloys

The alloys to be used shall conform to the material specifications and alloy designations as listed in Table 1 and modified by this Section of the Standard.

2.2 Selection of Alloys

The choice of alloy shall be made by the purchaser. It should be governed by such factors as suitability for handling the specified fluid, strength, formability, fabrication characteristics, and weldability. Parent and filler alloys must be compatible in the specific environment. (See Appendices B and D.)

2.3 Clad Alloys

Clad versions of the alloys approved herein (in addition to the clad alloys listed) are acceptable provided the following requirements are met:

(a) The cladding is not considered to contribute to the strength of the composite.

(b) Welds meet the quality requirements for the core alloy (see para. 5.2.1) irrespective of whether or not a weld overlay is made.

(c) If weld overlays of the cladding alloy are specified, the continuity of the cladding is maintained.

(99) 2.4 Plate and Sheet

Plate and sheet (hereinafter called plate) shall conform to the requirements of Table 1 and shall be specified on a thickness basis; specification by weight is unacceptable. Tapered plate is also acceptable for shells if its chemical composition and tensile properties conform to those required by ASTM B 209, Specification for Aluminum and Aluminum-Alloy Sheet and Plate, for the appropriate alloy, and if its thickness at every elevation is at least as great as that required by the application of the formula in para. 3.3.3.(a)(2). The measured thickness of shell and roof plates may vary within the tolerance limits, but shall not underrun the calculated thickness by more than 0.01 in. Calculated thickness means the thickness determined by applying the appropriate formulas for shell and roof design. The underrun tolerance is more restrictive than that given in ASTM B 209. It is the manufacturer's responsibility to ensure that the thickness requirements of this paragraph are satisfied.

2.5 Pipe and Tube

Pipe and tube shall conform to the requirements of Table 1.

2.6 Couplings (99)

Couplings shall be standard weight or extra heavy as required by the design and shall be made from alloy 6061-T6 tube conforming to the requirements of Table 1. Threads shall conform to ANSI/ASME B1.20.1, Pipe Threads, General Purpose (Inch).[1]

2.7 Flanges

2.7.1 Aluminum-Alloy Flanges. Aluminum-alloy, forged hub, slip-on welding and welding neck flanges, and lap joint stub ends shall be made of alloy 6061-T6 as given in ASTM B 247, Specification for Aluminum and Aluminum-Alloy Die Forgings, Hand Forgings, and Rolled Ring Forgings. Plate ring flanges shall be made from one of the plate materials listed in Table 1. Flange dimensions shall conform to ASME B16.5, Pipe Flanges and Flanged Fittings. (99)

2.7.2 Composite Lap Joint Flanges. For composite lap joint flanges, the aluminum-alloy stub ends shall be made from one of the materials listed in Table 1 for plate or pipe, and the steel or galvanized steel flanges shall conform to the material requirements stipulated for flanges in ASME B16.5. (See para. D3.1 of Appendix D covering protection against galvanic corrosion.)

[1] The use of a thread compound is recommended. Compounds meeting Federal Specification TT-A-580D, Antisieze Compound, White Lead Base, General Purpose, have been found suitable for use with aluminum alloys.

Copyright ASME International
Provided by IHS under license with ASME
No reproduction or networking permitted without license from IHS
Not for Resale

TABLE 1 MATERIAL SPECIFICATIONS

Plate and Sheet [ASTM B 209 and Note (1)]		Pipe and Tube (ASTM B 210, ASTM B 241, and ASTM B 345)		Rod, Bar, and Shapes [ASTM B 211, ASTM B 221, ASTM B 308, and Note (2)]		Forgings (ASTM B 247)		Castings [ASTM B 26 (Sand) and ASTM B 108 (Permanent Mold)]	
Alloy	Temper	Alloy	Temper	Alloy	Temper	Alloy	Temper	Alloy	Temper
1060	All	1060	All	1060 [Note (3)]	All	...	...	...	...
1100	All	1100 [Note (3)]	All	1100 [Note (3)]	All	1100	H112	...	...
...	...	...	...	2024 [Note (3)]	T4	...	...	...	...
3003	All	3003	All	...	...	3003	H112	...	...
Alclad 3003	All	Alclad 3003	All	...	...	...	...	...	...
3004	All	...	...	3004 [Note (3)]	All	...	...	...	...
Alclad 3004	All	...	...	...	...	...	...	...	...
5050	All	5050 [Note (3)]	All	...	...	...	...	...	...
...	...	...	...	5052 [Note (3)]	All	...	...	...	...
5052	All	5052 [Note (3)]	All	...	...	...	...	...	...
5083	All	5083	All	5083 [Note (3)]	All	5083	H111, H112	...	...
5086	All	5086	All	5086 [Note (3)]	All	...	...	...	...
5154	All	5154 [Note (3)]	All	5154 [Note (3)]	All	...	...	...	...
5254	All	5254 [Note (3)]	...	...	...	...	...	...	...
5454	All	5454 [Note (3)]	All	5454 [Note (3)]	All	...	...	...	...
5456	All	5456 [Note (3)]	All	5456 [Note (3)]	All	...	...	...	...
5652	All	5652 [Note (3)]	...	...	...	...	...	...	...
6061	T4, T6 [Note (4)]	6061	T4, T6	6061	T6	6061	T6	...	...
Alclad 6061	T4, T6 [Note (4)]	...	...	...	...	...	...	...	...
...	...	6063	T6	6063 [Note (3)]	T6	...	...	...	...
...	...	...	...	6262 [Notes (3) and (5)]	T9	...	...	...	...
...	...	...	...	...	...	...	...	514.0 [Note (3)]	F
...	...	...	...	...	...	...	...	443.0	F
...	...	...	...	...	...	...	...	356.0	T6, T71

NOTES:
(1) Product marking and certification per ASTM B 209 shall be mandatory for plate and sheet subject to pressure stresses.
(2) Tubular shapes handling fluid pressure not included.
(3) Not included in all specifications.
(4) Thickness 0.006 in. to 0.249 in.; for thickness 0.250 in. and over, corresponding tempers are T451 and T651.
(5) Nuts only.

Copyright ASME International
Provided by IHS under license with ASME
No reproduction or networking permitted without license from IHS
Not for Resale

STD.ASME B96.1-ENGL 1999 ■ 0759670 0616296 204 ■

2.8 Forgings

Forgings (other than flanges) shall be made of one of the forging alloys listed in Table 1.

(99) 2.9 Welding Rods and Electrodes

Welding rods and electrodes shall conform to ANSI/AWS A5.10, Specification for Bare Aluminum and Aluminum-Alloy Welding Electrodes and Rods. The classification selected shall be compatible with the parent alloy or alloy combination in the expected environment. (See Appendices B and D.)

2.10 Bolting

(99) **2.10.1 Aluminum-Alloy Bolting.** Aluminum-alloy bolts and nuts shall be made from rods conforming to ASTM B 211, Specification for Aluminum and Aluminum-Alloy Bar, Rod, and Wire. Bolts shall be either of alloy 2024-T4 or 6061-T6. Nuts shall be of alloy 6262-T9 or 6061-T6. Threads shall conform to American National Standard coarse series, Class 2A or 2B fit, ASME B1.1, Unified Inch Screw Threads (UN and UNR Thread Form). The 2024 finished bolts shall be given an anodic coating at least 0.0002 in. in thickness and chromate sealed. Bolting shall not be welded. A suitable lubricant should be applied to the nut threads.

2.10.2 Steel and Stainless Steel Bolting. For applications where they are suitable, the following bolting materials are acceptable: (99)

(a) 18-8 type stainless steel conforming to ASTM A 193, Specification for Alloy-Steel and Stainless Steel Bolting Materials for High-Temperature Service, or to ASTM A 320, Specification for Alloy-Steel Bolting Materials for Low-Temperature Service.

(b) Galvanized or aluminized steel conforming to ASTM A 307, Specification for Carbon Steel Bolts and Studs, 60,000 psi Tensile Strength, or to ASTM A 193; and to ASTM A 153, Specification for Zinc Coating (Hot-Dip) on Iron and Steel Hardware. Aluminized coatings shall be at least 0.001 in. thick and of commercially pure aluminum. (See Appendix D.)

2.11 Rivets (99)

Rivets shall conform to Specification MIL-R-5674E, General Specification for Rivets, Structural, Aluminum Alloy, Titanium Columbium Alloy, with head style as specified by the designer. The rivet alloy shall be compatible with the plate alloy.

Copyright ASME International
Provided by IHS under license with ASME
No reproduction or networking permitted without license from IHS
Not for Resale

Section 3
Design

3.1 Joint Design

3.1.1 Definitions. The terms relating to weld joints shall be as defined in Section IX, Welding and Brazing Qualifications, of the ASME Boiler and Pressure Vessel Code, hereinafter referred to as the Code.

3.1.2 Joint Restrictions. The following restrictions on type and size of joints or welds shall apply:

(a) Tack welds shall not be considered as having any strength value in the finished structure.

(b) Fillet weld size shall be not less than one-third the thickness of the thinner member at the joint. In no case shall the fillet weld size be less than $^3/_{16}$ in.

(c) Single-welded lap joints are permissible only for bottom plates and roof plates.

(d) Lap-welded joints shall be lapped not less than five times the nominal thickness of the thinner plate joined, but in the case of double-welded lap joints the lap need not exceed 2 in., and in the case of single-welded lap joints the lap need not exceed 1 in.

(99) **3.1.3 Welding Symbols.** Drawings shall show welding symbols as given in ANSI/AWS A2.4, Symbols for Welding, Brazing, and Nondestructive Examination, or other acceptable symbols that clearly indicate weld penetration and fusion requirements.

3.1.4 Typical Joints. Typical tank joints are shown in Figs. 1, 2, 3, and 4. The wide face of unsymmetrical V butt joints may be on the outside or on the inside of the tank shell at the option of the manufacturer. The tank shell shall be detailed to have all courses vertical.

(a) Vertical Joints in Shell. Vertical joints shall be butt joints with complete penetration and complete fusion as attained by double welding or by other means that will obtain the same quality of deposited weld metal on the inside and outside weld surfaces to agree with the requirements of para. 5.2. The suitability of plate preparation and welding procedure shall be determined in accordance with para. 7.2.

Vertical joints in adjacent shell courses shall not be in alignment but shall be offset from each other a minimum distance of 6 in.

(b) Horizontal Joints in Shell. Horizontal joints shall (99) have complete penetration and complete fusion. Top angles may be attached to the shell by a double-welded lap joint. The fillet size shall equal the thinner of the angle or shell plate to which the angle attaches. The suitability of plate preparation and welding procedure shall be determined in accordance with para. 7.2. Unless otherwise specified, abutting shell plates at horizontal joints shall have a common vertical centerline.

(c) Lap-Welded Bottom Joints. Lap-welded bottom (99) plates shall be reasonably rectangular and square edged. Three plate laps in tank bottoms shall not be closer than 12 in. to each other, to the tank shell, to butt-welded annular bottom plate joints, and to joints between annular bottom plates and bottom. Bottom plates need be welded on the top side only with a continuous full fillet weld on all joints. The bottom sketch plates under the bottom shell ring shall have the outer ends of the joints fitted and lap welded to form a smooth bearing for the shell plates as shown in Fig. 5.

(d) Butt-Welded Bottom Joints. Butt-welded bottom plates shall have the parallel edges prepared for butt welding with either square or V grooves. The butt welds may be made from both sides or from one side and shall have complete penetration and complete fusion. In the latter case, a backing strip $^3/_{16}$ in. or thicker, of an aluminum alloy compatible with the bottom plate (see para. 2.2), shall be used on the underside of the joint. The strips shall be tacked to one of the plates, and the intersection joints of the strips shall be welded with full fusion. A metal spacer may be used to maintain the root opening between the adjoining plate edges, provided it is not left in the weld. Three-plate joints in tank bottoms shall be separated by at least 12 in. from each other and from the tank shell.

(e) Bottom Annular Plate Joints. Bottom annular plate radial joints shall be butt welded in accordance with (d) above, and shall have complete penetration and complete fusion.

(f) Shell-to-Bottom Joint

(1) For bottom plate and annular plate thickness $^1/_2$ in. and less, inclusive of corrosion allowance, the attachment between the bottom edge of the lowest

Previous page is blank

Copyright ASME International
Provided by IHS under license with ASME
No reproduction or networking permitted without license from IHS

Not for Resale

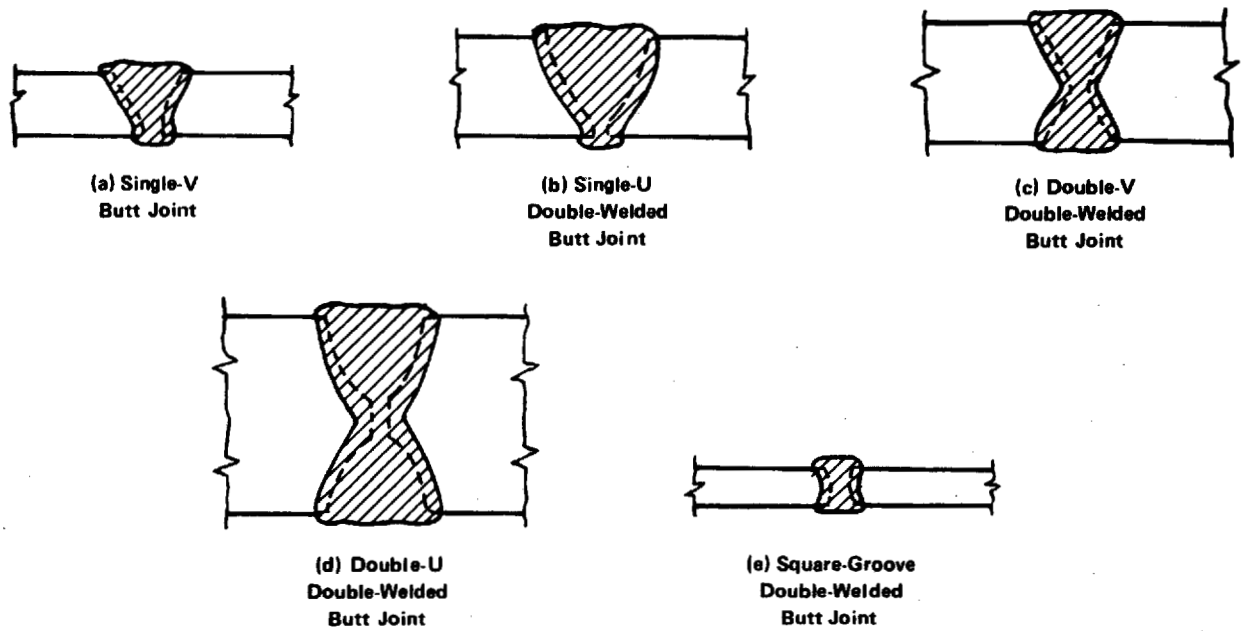

GENERAL NOTE: See para. 3.1.4(a) for specific requirements on vertical shell joints.

FIG. 1 TYPICAL VERTICAL JOINTS IN SHELL

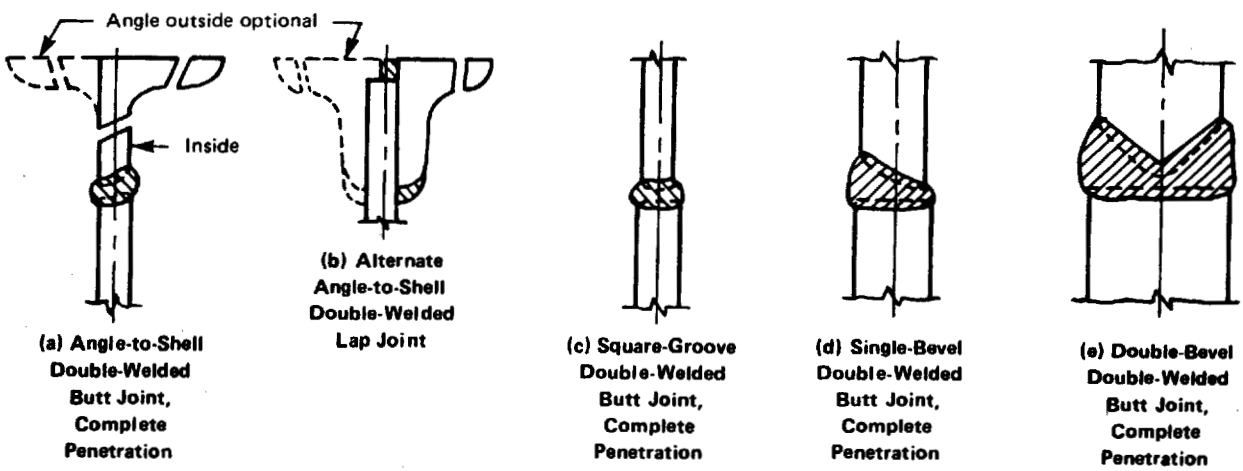

GENERAL NOTES:
(a) See para. 3.1.4(b) for specific requirements on horizontal shell joints.
(b) The above illustrations of adjacent plates (and the butt welded top angle) having a common vertical centerline are not intended to preclude the location by the fabricator of the plates and top angle so that they are flush on either the inner or outer surfaces.

FIG. 2 TYPICAL HORIZONTAL JOINTS IN SHELL

Copyright ASME International
Provided by IHS under license with ASME
No reproduction or networking permitted without license from IHS Not for Resale

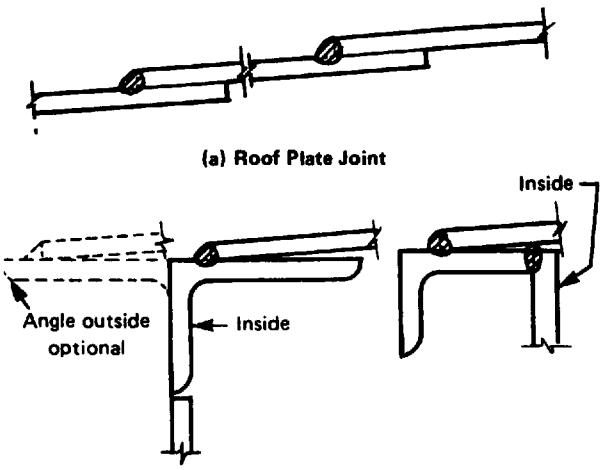

(a) Roof Plate Joint

(b) Top Angle Roof-to-Shell Joints

(c) Flanged Roof-to-Shell Joint
[Subject to limitations of para. 3.3.4 (b)]

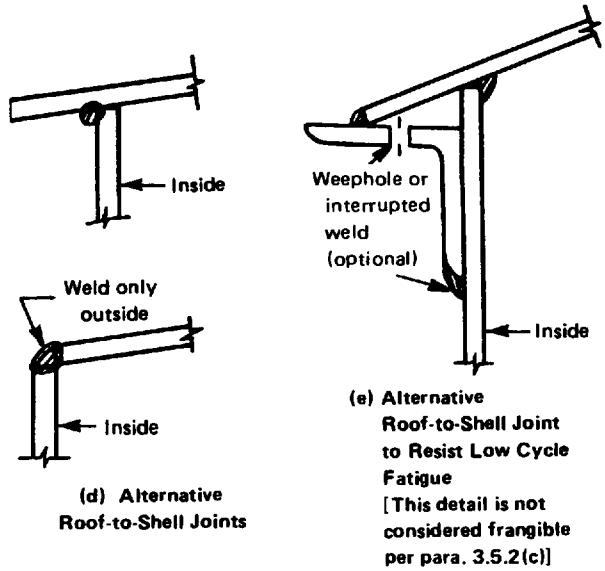

(d) Alternative Roof-to-Shell Joints

(e) Alternative Roof-to-Shell Joint to Resist Low Cycle Fatigue
[This detail is not considered frangible per para. 3.5.2(c)]

GENERAL NOTES:
(a) See para. 3.1.4(h) for specific requirements on roof joints.
(b) See para. 3.1.4(b) for alternate means of attaching top angle to shell.

FIG. 3 TYPICAL ROOF JOINTS

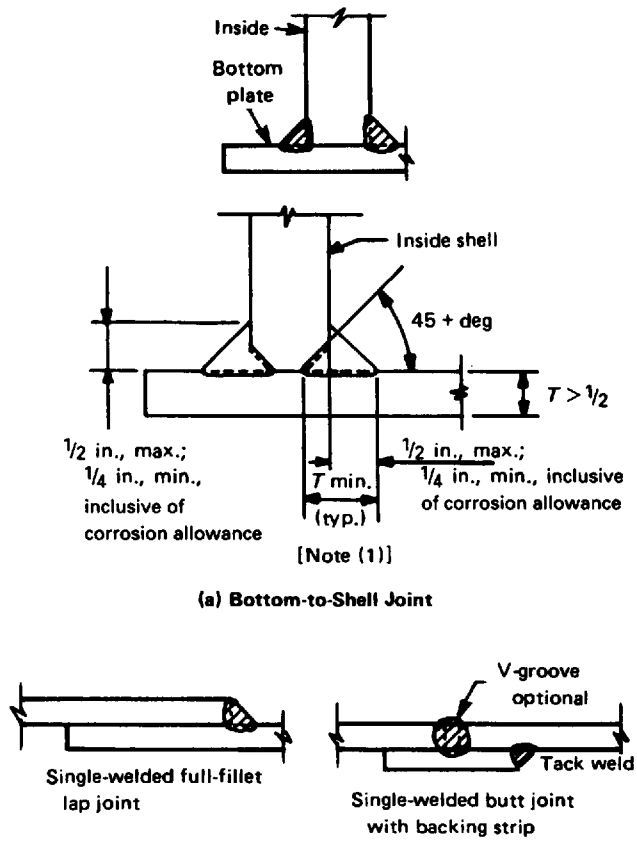

(a) Bottom-to-Shell Joint

(b) Bottom-Plate Joints [Note (2)]

NOTES:
(1) The combination of groove and fillet weld shall be used on both sides. See para. 3.1.4(f)(2).
(2) See paras. 3.1.4(c), (d), and (e) for specific requirements on bottom joints.

FIG. 4 TYPICAL BOTTOM JOINTS

course of shell plate and the bottom plate shall be a continuous fillet weld on each side of the shell plate. The size of each weld, inclusive of corrosion allowance, shall be not greater than 1/2 in. and not less than the nominal thickness of the thinner of the two plates being joined, nor less than the values in Table 2 (see Fig. 4). A groove weld on one or both sides of the joint, in addition to the fillet welds required by this paragraph, is permissible.

(2) For bottom plates or annular plates thicker than 1/2 in., inclusive of corrosion allowance, the attachment welds shall be of a size so that the groove depth plus leg of the fillet for a combined weld is equal to the bottom plate or annular plate thickness (see Fig. 4). The minimum bevel angle for the groove weld

Copyright ASME International
Provided by IHS under license with ASME
No reproduction or networking permitted without license from IHS
Not for Resale

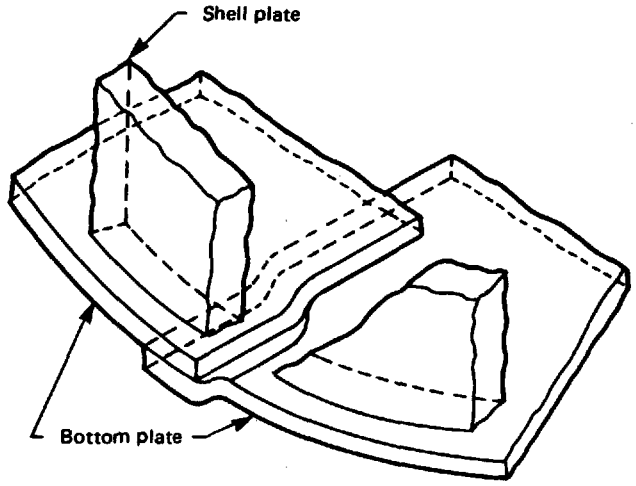

FIG. 5 METHOD FOR PREPARING LAP-WELDED BOTTOM PLATES UNDER TANK SHELL

shall be 45 deg, and the leg size for the fillet weld shall be not smaller than $^1/_4$ in. nor larger than $^1/_2$ in.

(g) Wind Girder Joints

(1) Full penetration butt welds shall be used for joining ring sections.

(2) Continuous welds shall be used for all bracket attachments to the tank shell.

(99) *(3)* Wind girders shall be attached to the tank shell by a continuous weld on the top side only, unless otherwise specified by the purchaser. The weld size shall not be less than $^3/_{16}$ in. Continuous welds shall be used for all joints that, because of their location, may be subjected to corrosion from entrapped elements.

(h) Roof and Top Angle Joints

(1) Roof plates shall be welded on the top side with a continuous full fillet weld on all joints.

(2) Roof plates shall be attached to the top angle of the tank with a continuous fillet weld on the top side only. The weld size shall not be less than $^3/_{16}$ in. Filler metal shall be compatible with both the roof plate and the top angle.

(3) Top angle sections shall be joined together by butt welds having complete penetration and fusion. Joint efficiency factors need not be applied when conforming to the requirements of paras. 3.5.4 and 3.5.5.

(4) For self-supporting roofs, whether of the cone, dome, or umbrella type, the edges of the roof plates, at the option of the manufacturer, may be flanged horizontally to rest flat against the top angle to improve welding conditions.

TABLE 2 SHELL-TO-BOTTOM JOINT

Thickness of Lowest Course of Shell Plate, in.	Minimum Size of Fillet Weld, Each Leg Dimension, in.
0.1875	$^3/_{16}$
Over 0.1875 to 0.75, incl.	$^1/_4$
Over 0.75 to 1.25, incl.	$^5/_{16}$
Over 1.25 to 1.75, incl.	$^3/_8$

3.1.5 Seal Welding. Seal welding of tank attachments to prevent entrapment of contaminants shall be specified by the purchaser.

3.2 Bottom Design (99)

Since storage tanks, particularly in the larger sizes, impose appreciable bearing loads on the subgrade, it is essential to provide suitable foundations to prevent uneven settlement with attendant distortion and possible failure of the tank. Recommended practice for foundations is given in Appendix E.

3.2.1 Bottom Contour. The design shape of the bottom shall be essentially flat, with slope for drainage as specified by the purchaser.

3.2.2 Bottom Plates

(a) All bottom plates shall have a minimum nominal thickness of $^1/_4$ in. except as required by Table 3 for annular rings and sketch plates (bottom plates upon which the shell rests). Plates under the shell shall preferably be of the same alloy as the shell, but in any case, shall be compatible with the shell alloy (see para. 2.2). All rectangular plates should have a minimum width of 72 in. All sketch plates with one rectangular end should also have a minimum width of 72 in. for the rectangular end.

(b) Bottom plates shall be ordered of sufficient size so that, when trimmed, at least a 1 in. width will project beyond the outside edge of the weld attaching the bottom to the shell plate.

(c) Bottom plates shall be welded in accordance with para. 3.1.4(c), (d), or (e).

(d) Bottom plates under the shell less than or equal to $^5/_{16}$ in. thick may be lap welded, sketch or segmental (annular) in shape, or may be in accordance with para. 3.2.2(e).

(e) Bottom plates under the shell greater than $^5/_{16}$ in. thick shall be butt welded. The shape of the plates may be sketch or segmental (annular). Annular plates shall have a circular outside circumference, but may have a regular polygonal shape inside the tank shell

Copyright ASME International
Provided by IHS under license with ASME
No reproduction or networking permitted without license from IHS
Not for Resale

TABLE 3 BOTTOM PLATE THICKNESS UNDER SHELL

Nominal Thickness of First Shell Course, in.	Design Stress in the First Shell Course With Tank Full to Maximum Filling Height						
	2,000	4,000	6,000	8,000	10,000	12,000	14,000
To 0.50, incl.	1/4	1/4	1/4	1/4	1/4	1/4	9/32
0.51 to 0.75, incl.	1/4	1/4	1/4	1/4	9/32	11/32	13/32
0.76 to 1.00, incl.	1/4	1/4	1/4	9/32	3/8	15/32	19/32
1.01 to 1.25, incl.	1/4	1/4	9/32	3/8	1/2	5/8	3/4
1.26 to 1.50, incl.	1/4	1/4	3/8	15/32	5/8	3/4	1 1/16
1.51 to 2.0, incl.	1/4	3/8	7/16	5/8	13/16	1	1 7/32

GENERAL NOTES:
(a) The above thicknesses are based on the foundation providing a uniform support under the full width of the bottom plate. Unless the foundation is properly compacted, particularly at the inside of the concrete ringwall, settlement will produce additional stresses in the bottom plate.
(b) Interpolation is acceptable.

with the number of sides equal to the number of annular plates.

(99) *(f)* Annular plates shall have a radial width, between the inside of the tank shell and any lap-welded joint in the remainder of the bottom, the greater of 24 in. or L (in inches) as calculated by the following equation:

$$L = \frac{255t_b}{\sqrt{hG}}$$

where

G = design specific gravity from para. 3.3.3
h = maximum design height of liquid, ft
t_b = nominal thickness of annular plate, in.

(g) When annular plates are used, the adjacent bottom plates shall be lap welded to the top of the annular plates with a lap of not less than 2 in. Butt welds in annular plates shall not be closer than 12 in. to any vertical shell weld.

3.3 Shell Design

See Tables A1 and A2 for typical tank sizes.

3.3.1 Allowable Stresses. The maximum allowable stresses that shall be used in design are given in (a) and (b) below.

(a) Tensile. The maximum tensile stress for shell design before applying the joint factor shall be as given in Table 4.

(b) Shear. The maximum allowable shear stresses in fillet welds shall be as shown in Table 5. The throat of a fillet weld shall be assumed to be 0.707 times the shorter leg of the fillet weld.

3.3.2 Loads

(a) Contained Fluid. Thicknesses shall be computed, on the basis that the tank is filled to a level H with water or the actual stored fluid, as specified by the purchaser, under the following conditions:

(1) water at ambient temperature with a specific gravity of 1.0;

(2) actual stored fluid at the lowest expected service temperature and the coincident specific gravity;

(3) actual stored fluid at the maximum design temperature and the coincident specific gravity.

(b) Appurtenances. Isolated radial loads on tank shells, such as caused by heavy loads on platforms and elevated walkways between tanks, shall be distributed by structural sections formed to the tank radius, plate ribs, or built-up members, preferably with the largest dimension in the circumferential direction.

3.3.3 Shell Plate Sizes

(a) Calculated Thickness. The minimum thickness of shell plates shall be the greater of the thicknesses computed from the stress on the vertical joints, for the three loading conditions specified in para. 3.3.2(a), as follows.

(1) For plate of uniform thickness,

$$t = \frac{2.60D(H - 1)G}{fe}$$

NOTE: The expression $(H - 1)$ allows the plate thickness to be computed 12 in. above the centerline of the lower horizontal joint of the course in question.

(2) For tapered plate,

$$t = \frac{2.60DHG}{fe}$$

Copyright ASME International
Provided by IHS under license with ASME
No reproduction or networking permitted without license from IHS
Not for Resale

TABLE 4 ALLOWABLE TENSILE STRESSES FOR SHELL CONSTRUCTION (Applies to All Products Except As Limited by the Notes)

Alloy [Note (1)]	Temper [Note (1)]	Specified Minimum Strength, psi [Note (2)]		Allowable Tensile Stress Values, *f*, psi, at Temperatures, °F, Not Exceeding [Note (3)]:						
		Tensile	Yield	100	150	200	250	300	350	400
1060	All	8,000	2,500	2,000	2,000	1,900	1,750	1,450	1,050	800
1100	All	11,000	3,500	2,800	2,800	2,800	2,700	1,750	1,350	1,000
3003	All	14,000	5,000	4,000	4,000	4,000	3,150	2,400	1,800	1,400
Alclad 3003	All	13,000	4,500	3,600	3,600	3,600	2,850	2,150	1,600	1,250
5050	All	18,000	6,000	4,800	4,800	4,800	4,800	4,800	2,800	1,400
3004	All	22,000	8,500	6,800	6,800	6,800	6,800	5,750	3,800	2,350
Alclad 3004	All	21,000	8,000	6,400	6,400	6,400	6,400	5,750	3,800	2,350
5052, 5652	All	25,000	9,500	7,600	7,600	7,600	7,500	5,600	4,100	2,350
5083 [Note (4)]	All	40,000	18,000	13,300	13,000	...	...	...	...	...
5083 [Note (5)]	All	39,000	17,000	13,000	13,000	...	...	...	...	...
5083 [Note (6)]	All	39,000	16,000	12,800	12,800	...	...	...	...	...
5083 [Note (7)]	All	39,000	16,000	12,800	12,800	...	...	...	...	...
5086	All	35,000	14,000	11,200	11,100	...	...	...	...	...
5154, 5254	All	30,000	11,000	8,800	8,700	...	...	...	...	...
5454	All	31,000	12,000	9,600	9,600	9,600	7,400	5,500	4,100	3,000
5456 [Note (4)]	All	42,000	19,000	14,000	13,950	...	...	...	...	...
5456 [Note (5)]	All	41,000	18,000	13,650	13,600	...	...	...	...	...
5456 [Note (6)]	All	41,000	19,000	13,650	13,600	...	...	...	...	...
6061, Alclad 6061	T4, T6 [Note (8)]	24,000 [Note (9)]	...	8,000	8,000	8,000	7,900	7,400	6,100	4,300
6063 [Note (6)]	T6	17,000 [Note (9)]	...	5,700	5,700	5,700	5,600	5,200	3,000	2,000

GENERAL NOTE: Linear interpolation for intermediate temperatures is permitted.

NOTES:
(1) Designations have been established in accordance with American National Standard Alloy and Temper Designation Systems for Aluminum, ANSI H35.1.
(2) Strengths shown apply to the -O temper, except for 6061, Alclad 6061, and 6063.
(3) See Appendix C for basis of stress.
(4) For sheet and plate (0.051 through 1.500 in. thick).
(5) For plate (1.501 through 3.000 in. thick).
(6) For extruded bars, rods, shapes, tubes, and pipe.
(7) For forgings.
(8) Thickness 0.006 to 0.249 in.; for thicknesses 0.250 in. and over, corresponding tempers are T451 and T651.
(9) Strength of the reduced section tensile specimen required to qualify welding procedures.

where

D = inside diameter of tank, ft

G = specific gravity of water (1.0) or of the actual stored fluid [see para. 3.3.2(a)]

H = height, in feet, from the bottom of the course under consideration; or, in the case of tapered plate, from the point under consideration to the top of the top angle, if any; or to the bottom of any overflow that limits tank filling height; or to any other level specified by the purchaser, or restricted by an internal floating roof, or controlled to allow for seismic wave action

e = joint efficiency factor; for vertical butt joints: 1.0 for radiography per para. 6.3.1(a), 0.85 for radiography per para. 6.3.1(b), and 0.70 for no radiography

f = allowable tensile stress, psi, at atmospheric temperature or at the maximum design temperature [see para. 3.3.1(a)] for the alloy used

Copyright ASME International
Provided by IHS under license with ASME
No reproduction or networking permitted without license from IHS
Not for Resale

TABLE 5 ALLOWABLE SHEAR STRESSES FOR FILLET WELDS

Filler Metal	Allowable Shear Stress, psi, at Temperatures, °F						
	100	150	200	250	300	350	400
1100	1,900	1,700	1,600	1,400	1,200	1,000	900
4043	2,900	2,800	2,800	2,700	2,600	2,100	1,600
5654	3,000	3,000	...	...	...	...	...
5183	4,600	4,500	...	...	...	...	...
5356	4,200	4,100	...	...	...	...	...
5554	4,200	4,200	4,200	3,800	3,400	3,000	2,600
5556	5,000	4,800	...	...	...	...	...

GENERAL NOTE:
Based on theoretical throat depth of weld and at temperatures indicated for times as long as 10,000 hr. These values apply when base metal is at least as strong as filler metal. See Appendix C for basis of stress.

t = thickness of plate, in.; for plates of uniform thickness, t is the thickness of the course under consideration; for tapered plate, t is the thickness at the point under consideration

(99) *(b) Minimum Thickness.* In no case shall the nominal thickness of shell plates be less than the following:

Tank Diameter, ft	Nominal Thickness, in.
Less than 20	3/16
20 through 119	1/4
120 through 200	5/16

NOTE: The nominal thickness of shell plates refers to the tank shells as constructed. The thicknesses specified are based on erection requirements.

3.3.4 Top Angle Design

(99) *(a)* Except as given in (b), (c), and (d) below, shells shall be supplied with top angles of the following sizes: tanks 35 ft or smaller in diameter, 2½ by 2½ by ¼ in.; tanks from over 35 ft through 60 ft in diameter, 2½ by 2½ by 5/16 in.; and tanks larger than 60 ft in diameter, 3 by 3 by 3/8 in. Alternative sections may be substituted for the listed angles provided that the moment of inertia, cross-sectional area, and thickness of such members are equal to or greater than those of the angles listed. The outstanding leg of the top angle may extend inside or outside the tank shell at the purchaser's option.

(b) For tanks not exceeding 30 ft in diameter and having supported cone roofs, the top edge of the shell may be flanged in lieu of installing a top angle. The radius of bend and the width of the flanged edge shall conform to the details of Fig. 3.

This construction may be used for any tank having a self-supporting roof if the total cross-sectional area of the junction fulfills the stated area requirements for the top angle construction. No additional member, such as an angle or bar, shall be added to the flanged roof-to-shell detail.

(c) Para 3.4.4 shall be used to determine top angle requirements for open-top tanks. (99)

(d) Supported cone-roof tanks required to meet para. 3.5.2(c) may have smaller top angles than specified in (a). (99)

3.3.5 Reinforcement of Openings. The following requirements on shell openings are intended to restrict the use of appurtenances to those providing for attachment to the shell by welding.

(a) General. Openings in tank shells larger than required to accommodate a 2 in. standard-weight coupling shall be reinforced.

(b) Required Reinforcement. The minimum cross-sectional area of the reinforcement shall be not less than the product of the vertical diameter of the hole cut in the tank shell and the shell plate thickness required by para. 3.3.3(a)(1). To determine the cross-sectional area of the reinforcement, the diameter shall be measured vertically.

(c) Elements of Reinforcement. The elements of reinforcement should preferably be of the same alloy as that of the shell plate (see Fig. 6 for mandatory requirement for the bottom reinforcing plate for flush-type cleanout fittings). When an element made of an alloy less strong than the shell plate alloy is to be used, its contribution to the required reinforcement strength shall be reduced in the ratio of the allowable stress for the alloy of such element to the allowable

Copyright ASME International
Provided by IHS under license with ASME
No reproduction or networking permitted without license from IHS
Not for Resale

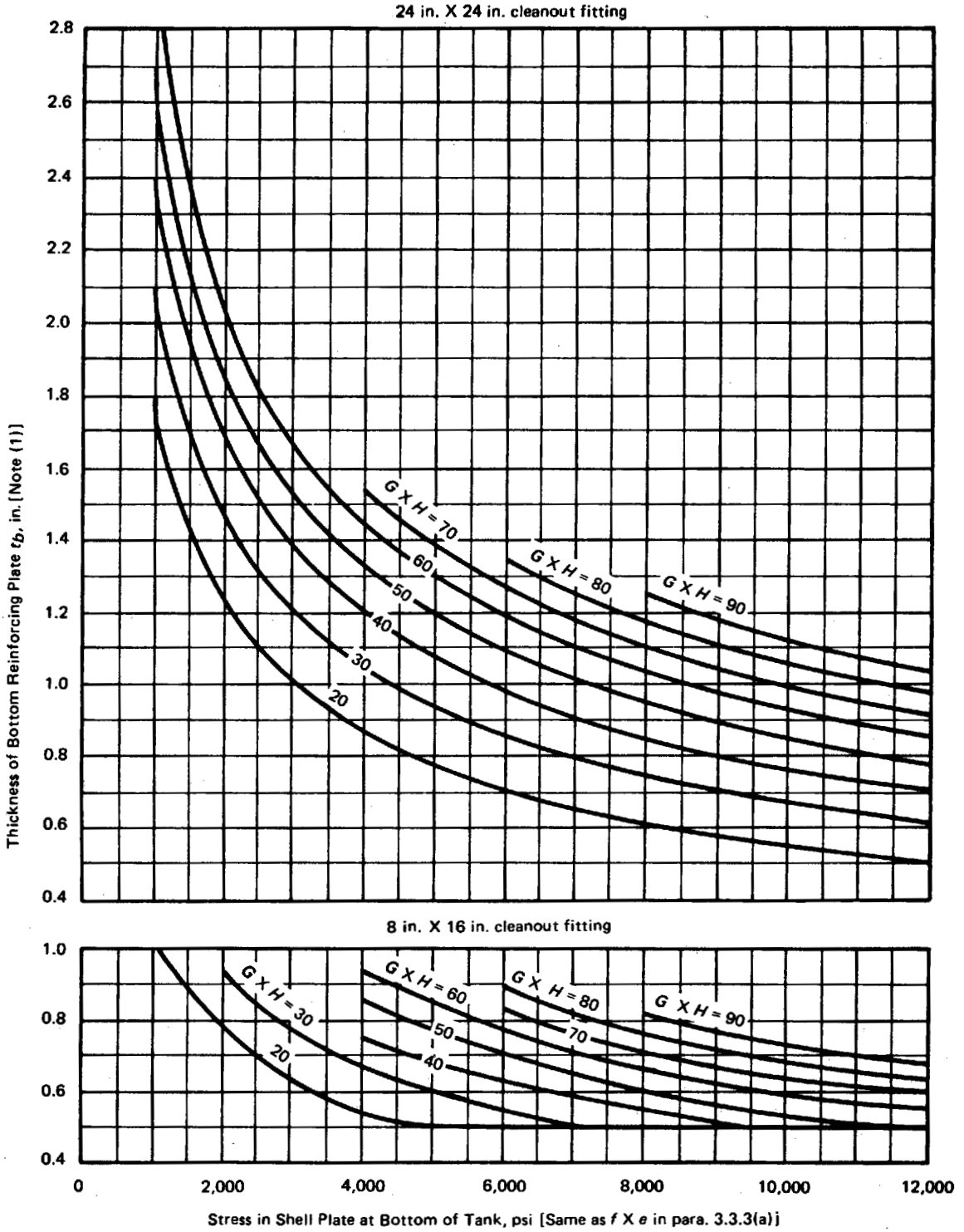

G = specific gravity of the liquid that determines the shell thickness [see paras. 3.3.2(d) and 3.3.3(d)]

H = height of tank, ft

NOTE:

(1) Bottom reinforcing plate must be of same strength material as bottom shell plate.

FIG. 6 VALUES FOR t_b TO BE USED IN FIG. 10

Copyright ASME International
Provided by IHS under license with ASME
No reproduction or networking permitted without license from IHS
Not for Resale

stress for the alloy of the shell plate, as determined from Table 4. All effective reinforcement shall be made within a distance, above or below the centerline of the shell opening, equal to the vertical dimension of the hole in the tank shell plate. The reinforcement may be provided by any one, or any combination, of the following:

(1) a reinforcing plate;

(2) the portion of the neck of the fitting that may be considered as reinforcement according to (d) below;

(3) any excess shell plate thickness, other than corrosion allowance, beyond that required by para. 3.3.3(a) within a vertical distance, both above and below the centerline of the hole in the shell, equal to the vertical dimension of the hole in the tank shell plate.

(d) Neck of Fitting. The following portions of the neck of a fitting may be considered a part of the area of reinforcement:

(1) that portion extending outward from the outside surface of the tank shell plate for a distance equal to four times the neck wall thickness or, if the neck wall thickness is reduced within this distance, to the point of transition;

(2) that portion lying within the shell plate thickness;

(3) that portion extending inward from the inside surface of the tank shell plate for a distance as specified in (d)(1) above.

(e) Fitting Weld. The aggregate strength of the weld attaching a fitting to the shell plate or an intervening reinforcing plate, or both, shall equal at least that portion of the forces passing through the entire reinforcement that is computed to pass through the fitting considered.

(f) Reinforcement Weld. The aggregate strength of the welding attaching any intervening reinforcing plate to the shell plate shall at least equal that portion of the forces passing through the entire reinforcement that is computed to pass through the reinforcing plate considered.

(g) Size of Weld. The attachment welding to the shell along the outer periphery of the flanged fitting or reinforcing plate shall be considered effective only for the parts lying outside of the area bounded by vertical lines drawn tangent to the shell opening. The outer peripheral welding, however, shall be applied completely around the reinforcement. All the inner peripheral welding shall be considered effective. The strength of the effective attachment welding shall be considered as its shear resistance at the stress values given for fillet welds in para. 3.3.1(b). The outer peripheral weld joining the reinforcement plate to the shell shall have a minimum size in accordance with Table 6, except that when low-type nozzles are used with the reinforcing plate extending to the tank bottom (see Fig. 7), the size of that portion of the peripheral weld that attaches the reinforcing plate to the bottom plate shall conform to para. 3.1.4(f). The inner peripheral welding shall be sufficiently large to sustain the remainder of the loading.

TABLE 6 NOZZLES — WELD SIZES

Thickness of Shell and Reinforcing Plate, *t* and *T*	Size of Fillet Weld A for Nozzles Larger Than 2 in. [Note (1)]	Size of Fillet Weld A for 2 in., 1 1/2 in., 1 in., and 3/4 in. Nozzles [Note (1)]
3/16	1/4	1/4
1/4	1/4	1/4
5/16	1/4	1/4
3/8	1/4	1/4
7/16	1/4	1/4
1/2	1/4	5/16
9/16	1/4	5/16
5/8	5/16	5/16
11/16	5/16	5/16
3/4	3/8	5/16
13/16	7/16	5/16
7/8	7/16	5/16
15/16	1/2	5/16
1	1/2	5/16
1 1/16	9/16	5/16
1 1/8	9/16	5/16
1 3/16	9/16	5/16
1 1/4	5/8	5/16
1 5/16	5/8	5/16
1 3/8	11/16	5/16
1 7/16	11/16	5/16
1 1/2	3/4	5/16

GENERAL NOTES:
(a) All dimensions are in inches.
(b) See Fig. 7.

NOTE:
(1) Weld size need not exceed thickness of nozzle neck, *n*.

(h) Multiple Openings. When two or more openings are located so close that the edges of their normal reinforcing plates would be closer than 6 in. or 10 times the thickness of the thicker reinforcing plate, they shall be treated and reinforced as given in (1) through (3) below.

(1) All such openings shall be included in a single reinforcing plate, which shall be proportioned for the largest opening in the group.

Copyright ASME International
Provided by IHS under license with ASME
No reproduction or networking permitted without license from IHS
Not for Resale

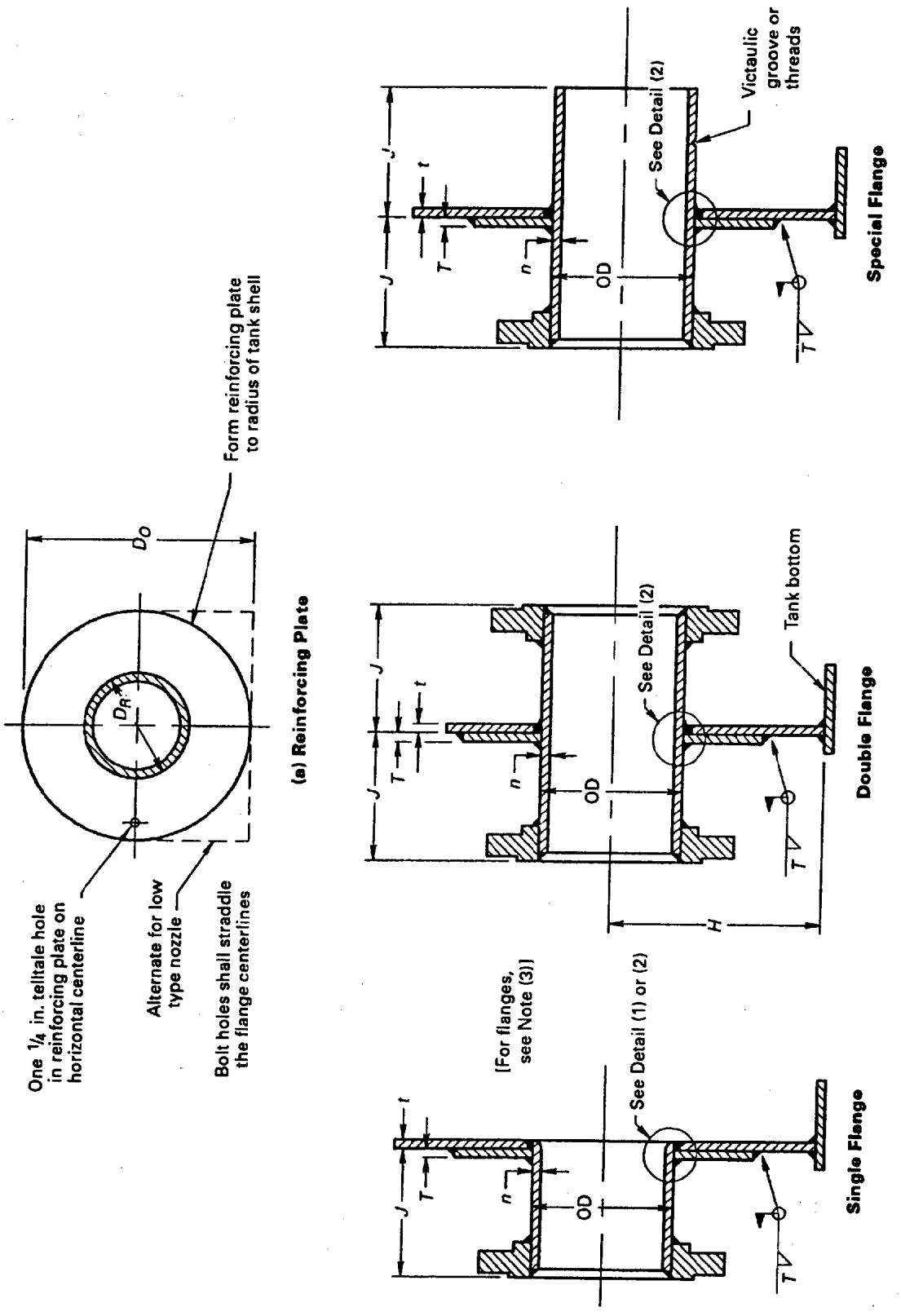

FIG. 7 SHELL NOZZLES (See Tables 6 and 17)

Not for Resale

Copyright ASME International
Provided by IHS under license with ASME
No reproduction or networking permitted without license from IHS

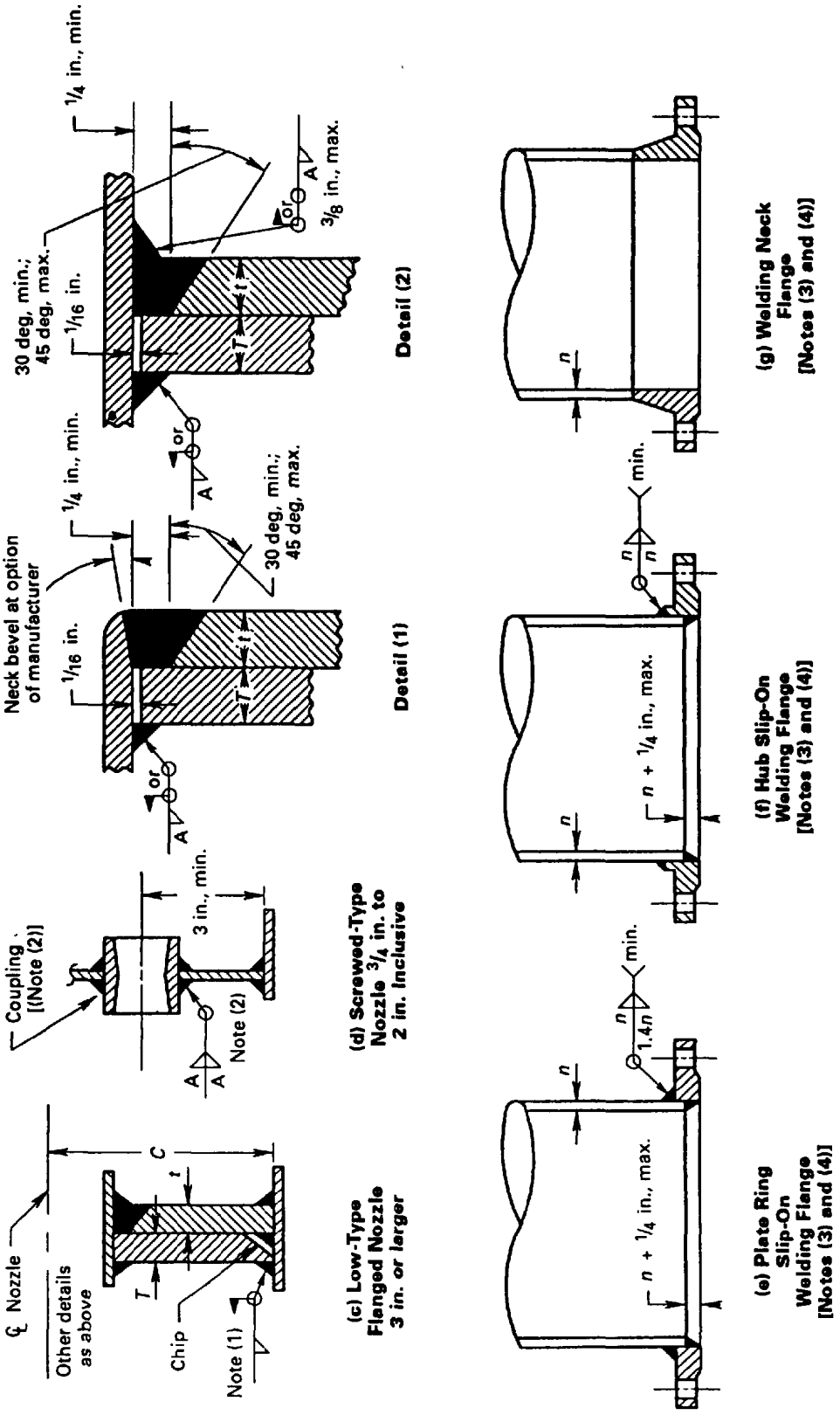

FIG. 7 SHELL NOZZLES (CONT'D) (See Tables 6 and 17)

NOTES :
(1) See para. 3.3.5(g) regarding size of welds.
(2) See para. 3.6.11 regarding couplings used as shell nozzles. Heavy-walled couplings may be necessary to minimize thread distortion from welding. Class 6000 is recommended.
(3) Flange dimensions shall conform to ASME B16.5.
(4) See Table 17 for minimum required nominal nozzle wall thickness.

Copyright ASME International
Provided by IHS under license with ASME
No reproduction or networking permitted without license from IHS
Not for Resale

(99) *(2)* If the normal reinforcing plates for the smaller openings in the group, considered separately, would fall within the area limits of the solid portion of a normal plate for the largest opening, the smaller openings may be included in a normal plate for the largest opening without increase in size of that plate. This is provided, however, that if any opening intersects the vertical centerline of another, the total width of the final reinforcing plate along the vertical centerline of either opening shall not be less than the sum of the widths of the normal plates for the openings involved.

(99) *(3)* If the normal reinforcing plates for the smaller openings, considered separately, would not fall within the area limits of the solid portion of a normal plate for the largest opening, the group reinforcing-plate size and shape shall be such as to include the outer limits of the normal reinforcing plates for all of the openings in the group. Change of size, from the outer limits of the normal plate for the largest opening to the outer limits of that for the smaller opening farthest therefrom, shall be by uniform straight taper, unless the normal plate for any intermediate opening would extend beyond the limits so fixed. In this case, uniform straight tapers shall join the outer limits of the several normal plates. The provisions of (h)(2) above with respect to openings on the same or adjacent vertical centerlines shall also apply in this case.

3.3.6 Flush-Type Cleanout Fittings. Because of the restraint imposed by the tank bottom and the geometry of the reinforcement, cleanout fittings having the bottom member flush with the tank bottom require special consideration, as provided in (a) and (b) below. For selected sizes of fittings, dimensional details are covered in para. 3.6.4. See para. 3.6.1(a) for restrictions on designs of cleanout fittings. Cleanout fittings of the flush type shall conform to para. 3.6.4 (see Fig. 6, Figs. 8 through 11, and Table 7) and to the requirements given in (a) and (b) below.

(a) Size and Shape. The opening shall be rectangular, except that the upper corners of the opening shall have a radius at least equal to one-third the greatest height of the clear opening. The width or height of the clear opening shall not exceed 24 in.

(b) Reinforcement Elements. The reinforcement required may be provided by any one, or any combination, of the following:

(1) a shell reinforcing plate;

(2) any excess shell plate thickness, other than corrosion allowance, beyond that required by para. 3.3.3(a);

(3) that portion of the neck plate equal to the thickness of the reinforcing plate.

(c) Bottom Reinforcement. The bottom reinforcement shall be as shown in Figs. 6 and 10.

3.4 Wind Girder Design

3.4.1 General. Open-top tanks shall be provided with wind girders (stiffening rings) to maintain roundness when the tank is subjected to wind loads. Stiffening rings shall be located at or near the top of the shell and preferably on the outside of the shell. The elements of stiffening rings may be of different alloys. All tanks over 50 ft in diameter shall be checked for possible need for intermediate stiffeners on the shell using the rules in para. 3.4.8.

3.4.2 Required Section Modulus

(a) Single-Alloy Rings. The required minimum section modulus of the stiffening ring, if all of the elements of the stiffening ring, including the tank shell, are of the same alloy, is:

$$Z = \frac{0.084WD^2H_1}{f}$$

where

D = diameter of tank, ft
H_1 = height of tank shell, ft
W = wind pressure, lb/ft^2
Z = section modulus, in.^{3}
f = allowable tensile working stress, psi, for the alloy at operating temperature, from Table 4

NOTE: W is assumed to be 18 lb/ft^2 of projected area for 100 mph wind velocity. If the specified wind velocity is different from 100 mph, the wind pressure should be multiplied by:

$$\left(\frac{\text{specified velocity}}{100\text{ mph}}\right)^2$$

(b) Multiple-Alloy Rings. If the elements of the stiffening ring are made of different alloys, or of an alloy different from the tank shell, the maximum imposed stress in each element shall not exceed the allowable tensile stress for the alloy of that element as given in Table 4. The imposed stress in the element may be determined from:

$$s = \frac{0.084\text{WD}^2H_1c}{I}$$

where

D = diameter of tank, ft

Copyright ASME International
Provided by IHS under license with ASME
No reproduction or networking permitted without license from IHS
Not for Resale

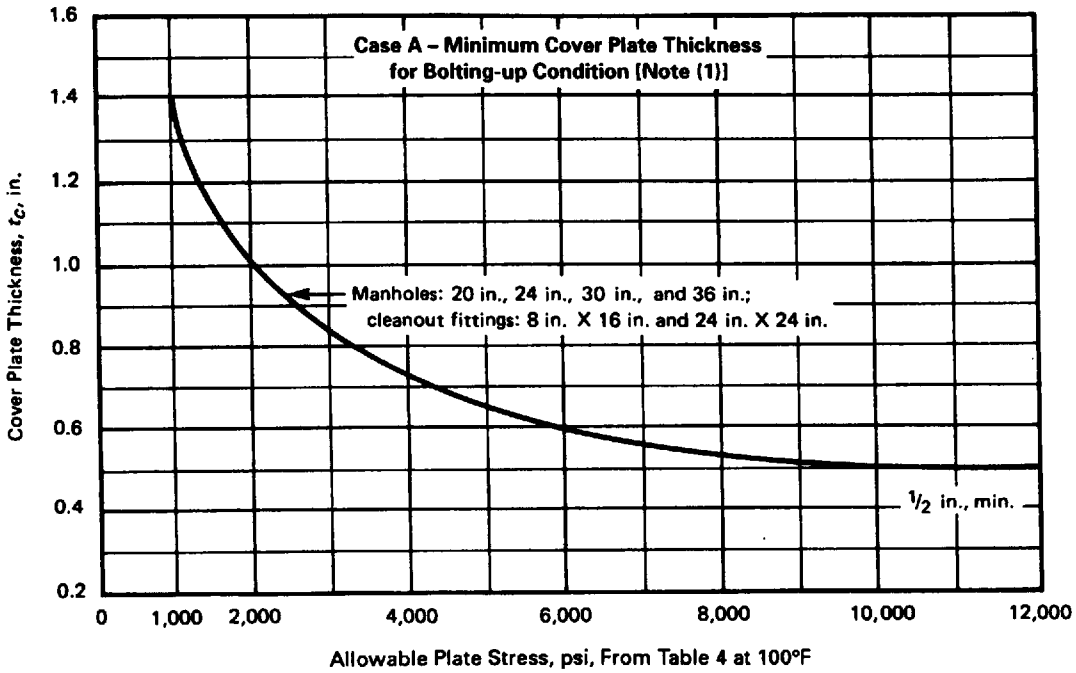

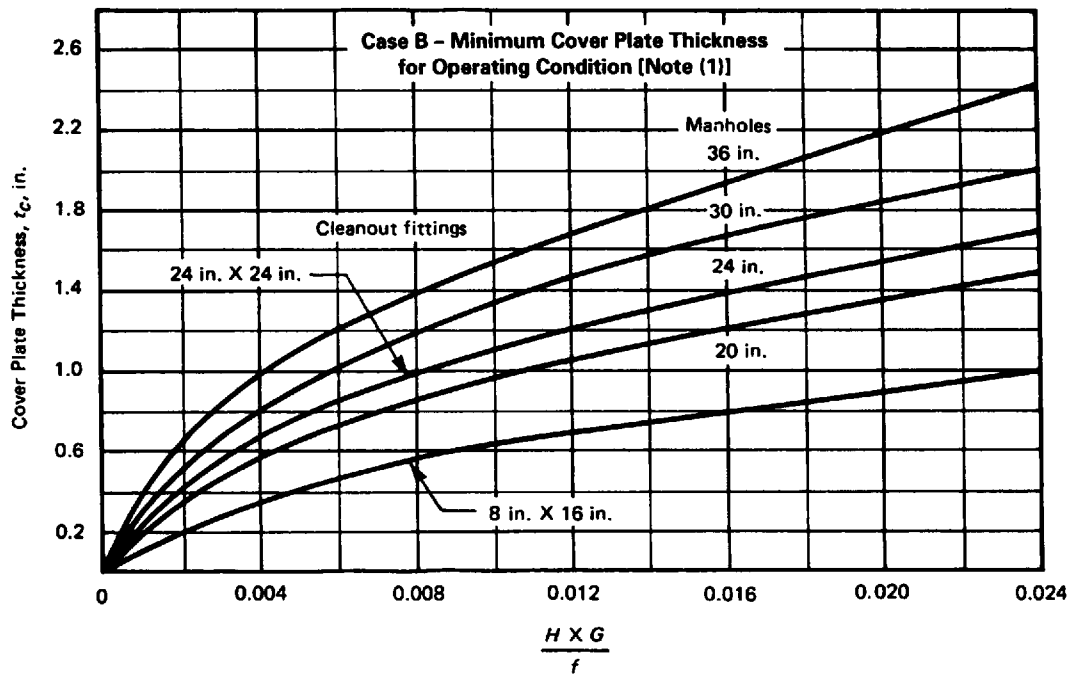

G = specific gravity of liquid that determines the shell thickness [see paras. 3.3.2(a) and 3.3.3(a)]
H = height of tank above centerline of manhole, ft
f = allowable tensile stress from Table 4 at the temperature coincident with G, psi

NOTE:
(1) The minimum cover plate thickness shall be maximum of case A or B values (curves apply only with gaskets shown in Figs. 10 and 13).

FIG. 8 COVER PLATE THICKNESS FOR SHELL MANHOLES AND CLEANOUT FITTINGS (See Figs. 10 and 13)

Copyright ASME International
Provided by IHS under license with ASME
No reproduction or networking permitted without license from IHS
Not for Resale

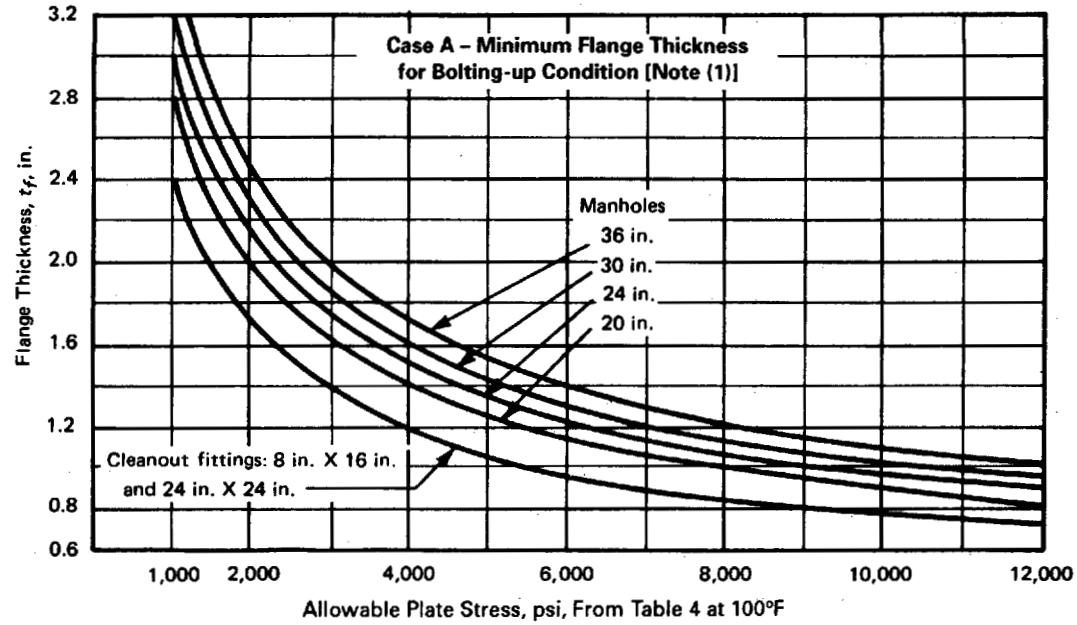

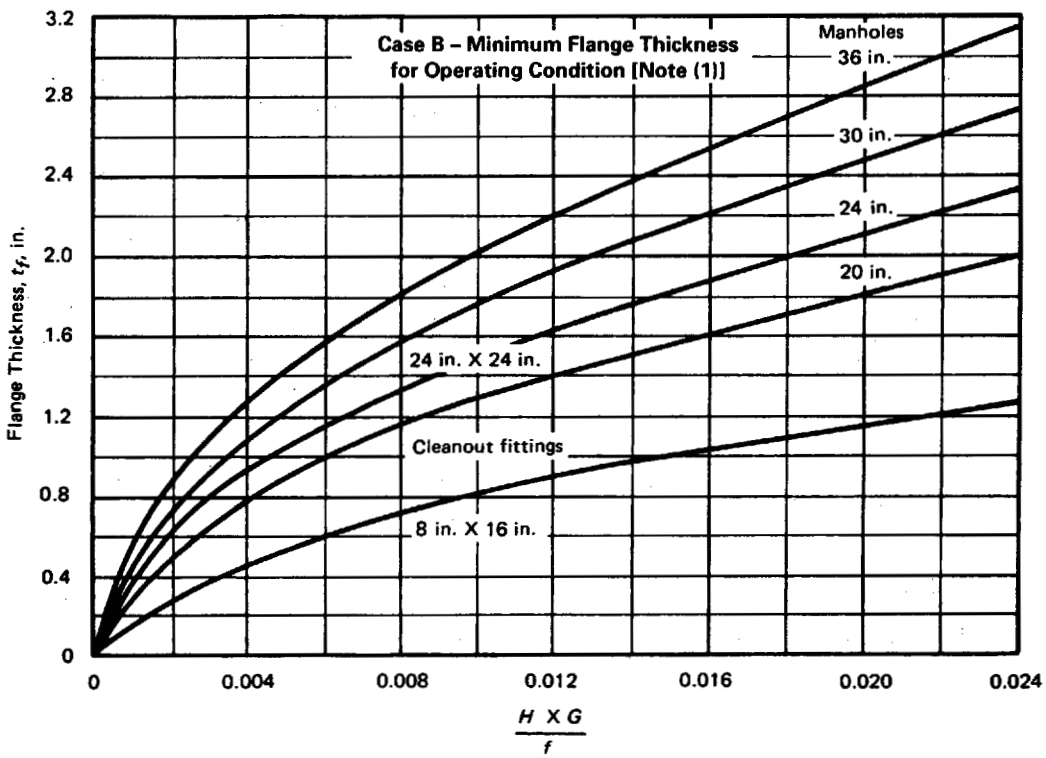

G = specific gravity of liquid that determines the shell thickness [see paras. 3.3.2(a) and 3.3.3(a)]
H = height of tank above centerline of manhole, ft
f = allowable tensile stress from Table 4 at the temperature coincident with G, psi

NOTE:
(1) The minimum cover plate thickness shall be maximum of case A or B values (curves apply only with gaskets shown in Figs. 10 and 13).

FIG. 9 FLANGE THICKNESS FOR SHELL MANHOLES AND CLEANOUT FITTINGS (See Figs. 10 and 13)

Copyright ASME International
Provided by IHS under license with ASME
No reproduction or networking permitted without license from IHS Not for Resale

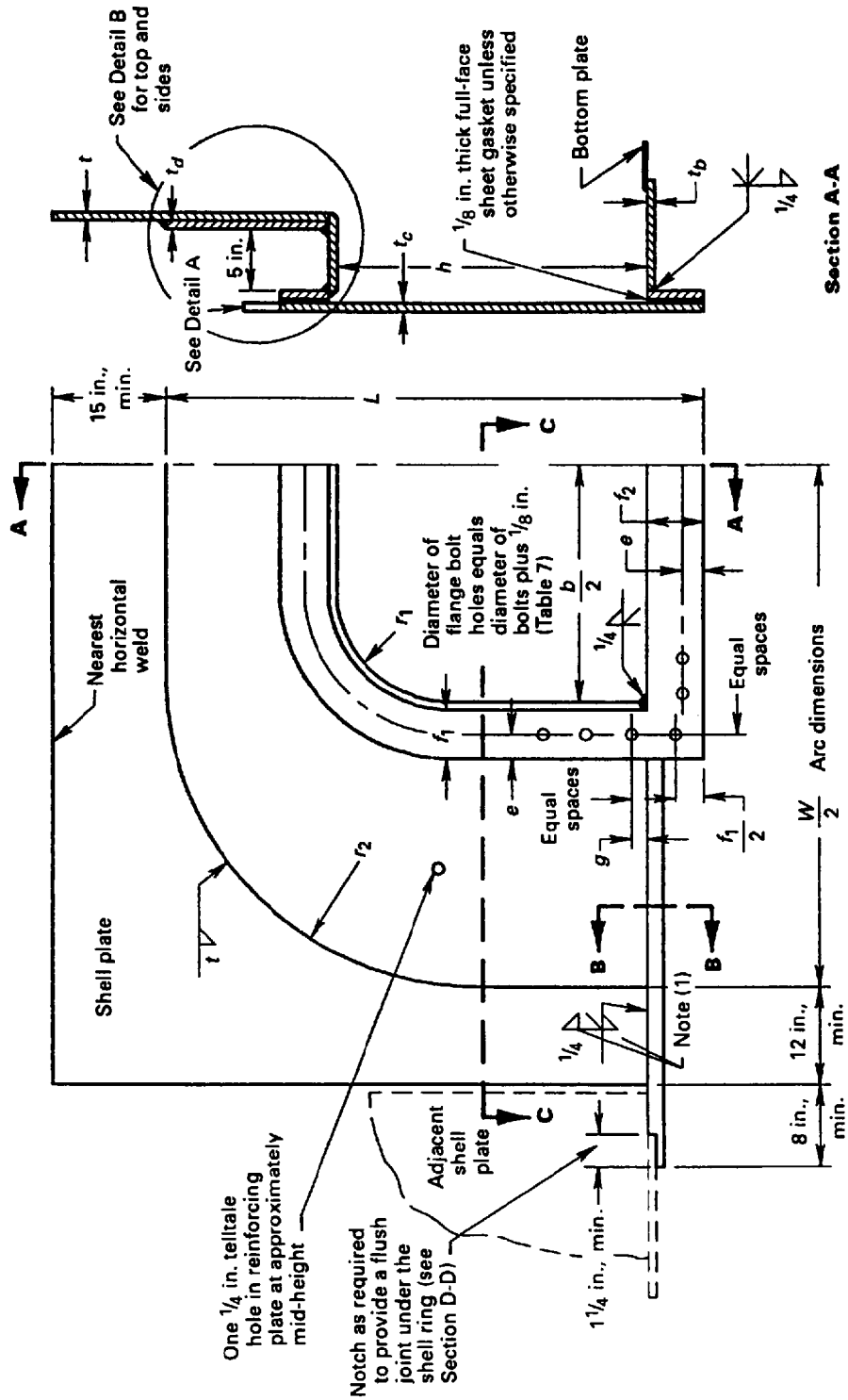

FIG. 10 FLUSH-TYPE CLEANOUT FITTINGS (See Figs. 6, 8, 9, and Table 7)

Not for Resale

Copyright ASME International
Provided by IHS under license with ASME
No reproduction or networking permitted without license from IHS

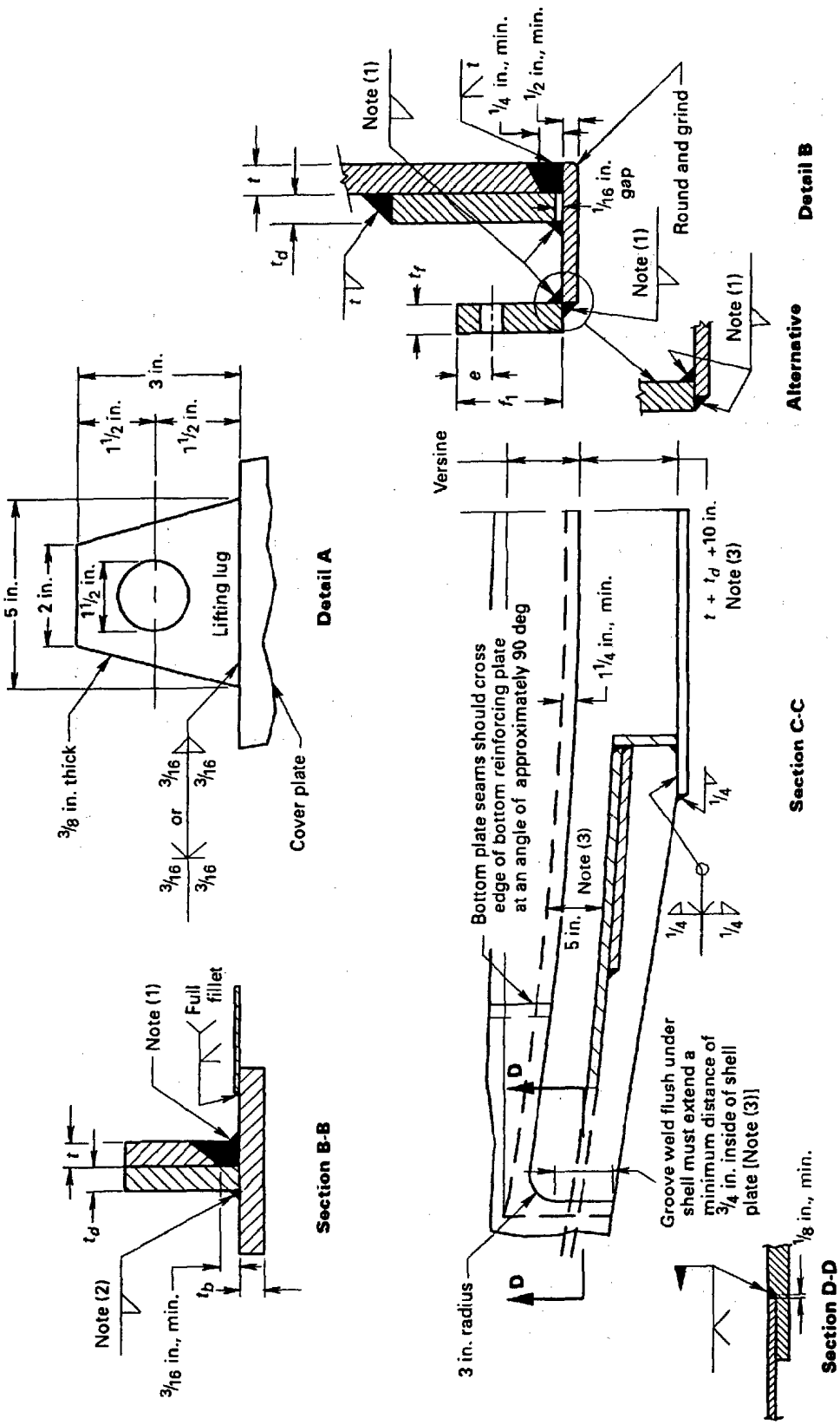

NOTES:
(1) Fillet weld size thickness of thinner plate joined with a maximum of ½ in.
(2) In accordance with para 3.3.5(g).
(3) If bottom annular plate is used, extend these dimensions to accommodate full width of annular plate.

FIG. 10 FLUSH-TYPE CLEANOUT FITTINGS (CONT'D) (See Figs. 6, 8, 9, and Table 7)

Copyright ASME International
Provided by IHS under license with ASME
No reproduction or networking permitted without license from IHS
Not for Resale

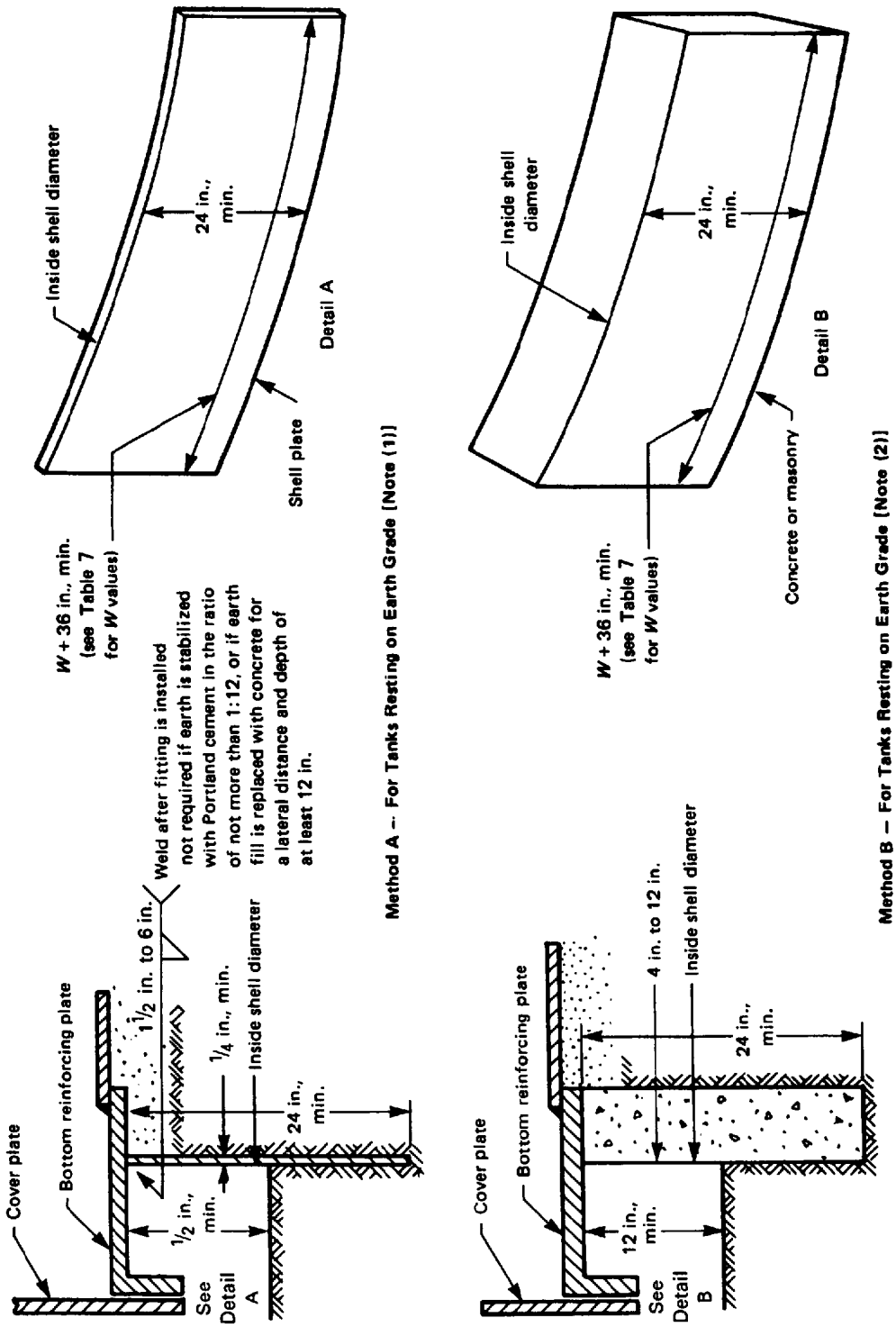

FIG. 11 FLUSH-TYPE CLEANOUT FITTING SUPPORTS

Not for Resale

Copyright ASME International
Provided by IHS under license with ASME
No reproduction or networking permitted without license from IHS

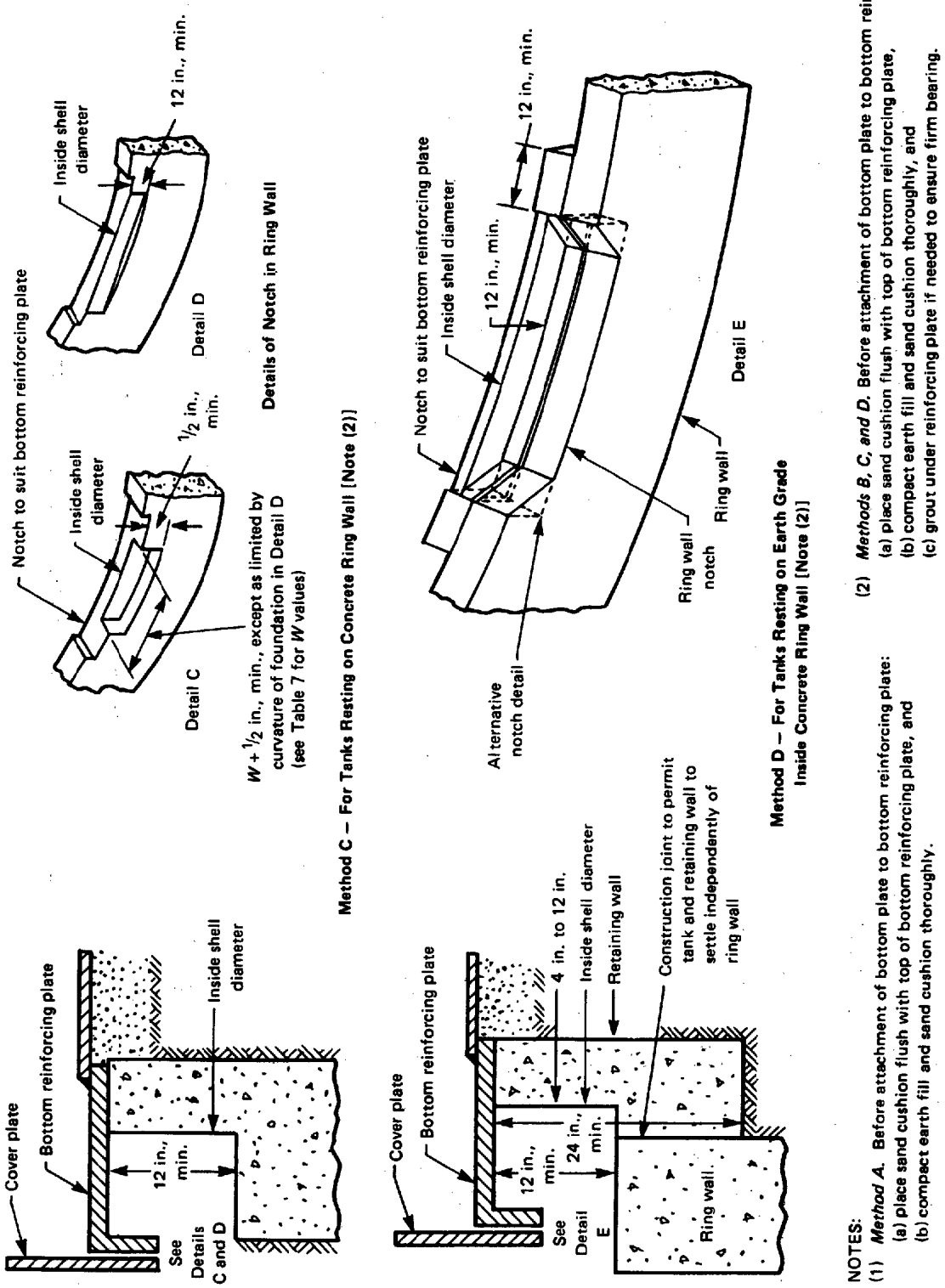

NOTES:
(1) *Method A.* Before attachment of bottom plate to bottom reinforcing plate:
(a) place sand cushion flush with top of bottom reinforcing plate, and
(b) compact earth fill and sand cushion thoroughly.
(2) *Methods B, C, and D.* Before attachment of bottom plate to bottom reinforcing plate:
(a) place sand cushion flush with top of bottom reinforcing plate,
(b) compact earth fill and sand cushion thoroughly, and
(c) grout under reinforcing plate if needed to ensure firm bearing.

FIG. 11 FLUSH-TYPE CLEANOUT FITTING SUPPORTS (CONT'D)

Copyright ASME International
Provided by IHS under license with ASME
No reproduction or networking permitted without license from IHS
Not for Resale

TABLE 7 FLUSH-TYPE CLEANOUT FITTINGS

Size of Cleanout Fitting	Height of Opening, h	Arc Width of Opening, b	Arc Width of Shell Reinforcing Plate, W	Height of Shell Reinforcing Plate, L	Thickness of Shell Reinforcing Plate, t_d	Upper Corner Radius of Opening, r_1
8 x 16	8	16	46	14	1.17 x t [Note (1)]	3¼
24 x 24	24	24	72	36	1.32 x t [Note (1)]	8

Size of Cleanout Fitting	Upper Corner Radius of Shell Reinforcing Plate, r_2	Edge Distance of Bolts, e	Flange Width (Except at Bottom), f_1	Bottom Flange Width, f_2	Special Bolt Spacing, g [Note (2)]	Number of Bolts [Note (3)]	Diameter of Bolt [Note (3)]
8 x 16	14	1¼	3½	3½	3¼	22	¾
24 x 24	29	1¼	3½	3¾	3½	36	¾

GENERAL NOTES:
(a) All dimensions are in inches.
(b) See Fig. 10.

NOTES:
(1) t = shell thickness
(2) Spacing at lower corners of cleanout fitting flange.
(3) The number and size of the bolts are based on the strength of A 307 steel bolts. If aluminum or other bolts are used, see Table 8 for allowable bolt stresses. Redesign based on allowable stress proportion is acceptable. The number of bolts shall not be reduced.

H_1 = height of tank shell, ft
I = moment of inertia of stiffening ring section, in.^{4}
W = wind pressure, lb/ft^2
c = distance from neutral axis of stiffening ring section to outermost fiber of element in question, in.
s = imposed stress of the element, psi

NOTE: W is assumed to be 18 lb/ft^2 of projected area for 100 mph wind velocity. If the specified wind velocity is different from 100 mph, the wind pressure should be multiplied by:

$$\left(\frac{\text{specified velocity}}{100 \text{ mph}}\right)^2$$

(c) Typical Sections. The moment of inertia and section modulus of the stiffening ring section may include a portion of the tank shell for a distance of 16 times the plate thickness below and, if applicable, above the shell ring attachment. When curb angles are attached to the top edge of the shell ring by butt welding, this distance shall be reduced by the width of the vertical leg of the angle.

NOTE: Typical ring members and their corresponding section moduli are given in Appendix A, Fig. A1 and Table A3.

3.4.3 Types of Stiffening Rings. Stiffening rings may be made of either structural sections, formed plate sections, sections built up by welding, or combinations of such types of sections assembled by welding. The outer periphery of stiffening rings may be circular or polygonal.

3.4.4 Restrictions on Stiffening Rings

(a) Minimum Sections. The minimum size of angle for use alone, or as a component in a built-up stiffening ring, shall be 2½ by 2½ by ¼ in. The minimum nominal thickness of plate for use in formed or built-up stiffening rings shall be ¼ in.

(b) Top Curb Member. When stiffening rings are located more than 24 in. below the top of the shell, an appropriate top curb member shall also be provided. This member shall have a section modulus of not less than that of a 2½ by 2½ by 3/16 in. angle for 3/16 in. shells and a 3 by 3 by ¼ in. angle for shells greater than 3/16 in. thick.

(c) Drainage. Rings of such design that liquid may be trapped thereon shall be provided with adequate drain holes.

3.4.5 Stiffening Rings Used as Walkways. A stiffening ring, or portion thereof, that is used regularly as a walkway shall have a width of not less than 24 in. clear of the projecting curb member on the top of the tank shell, should be located preferably 3 ft 6 in. below the top of the curb member, and shall be provided with a hand railing on the unprotected side and at the ends of the section to be used.

Copyright ASME International
Provided by IHS under license with ASME
No reproduction or networking permitted without license from IHS
Not for Resale

TABLE 8 ALLOWABLE TENSILE STRESSES FOR BOLTS FOR TANK CONNECTIONS

Bolt Material and Temper [Note (1)]	Bolt Sizes	Specified Minimum Strength, psi		Maximum Allowable Tensile Stress Values, psi, at Temperatures, °F, Not Exceeding [Note (2)]:						
		Tensile	Yield	100	150	200	250	300	350	400
Aluminum alloy, ASTM F 468:										
Alloy 2024-T4	All sizes	62,000	40,000	13,300	12,900	12,600	12,000	9,900	7,900	6,000
Alloy 6061-T6	All sizes	42,000	35,000	10,500	10,200	9,900	9,400	7,900	6,200	4,400
Low carbon steel, ASTM A 307:										
Grades A and B	4 in. and under	55,000	30,000 [Note (3)]	10,000	9,600	9,200	8,900	8,600	8,300	8,000
Alloy steel, ASTM A 193:										
Grade B7	2½ in. and under	125,000	105,000	31,300	31,300	31,300	31,300	31,300	30,800	30,300
Stainless steel, ASTM A 193 and ASTM A 320 (solution treated) [Note (4)]:										
Grades B8, B8C, B8D, B8M, and B8T	All sizes	75,000	30,000	10,000	9,100	8,300	7,800	7,400	7,000	6,700
Stainless steel, ASTM A 193 and ASTM A 320 (strain hardened):										
Grades B8, B8C, B8M, and B8T	¾ in. and under	125,000	100,000	30,000	29,000	28,000	27,000	26,000	25,000	24,000
	Over ¾ in. to 1 in.	115,000	80,000	26,000	25,500	25,000	24,500	24,000	23,500	23,000
	Over 1 in. to 1¼ in.	105,000	65,000	21,000	20,500	20,000	19,500	19,000	18,500	18,000
	Over 1¼ in. to 1½ in.	100,000	50,000	16,000	15,500	15,000	14,500	14,000	13,500	13,000

GENERAL NOTE: Aluminum-alloy bolts shall not be welded.

NOTES:
(1) See para. 2.10 for anodic, galvanized, and aluminized coatings (see para. 2.6).
(2) See Appendix C for basis of stresses.
(3) Not stated in ASTM A 307. This is an assumed value, estimated to be conservative.
(4) Recognized properties at elevated temperatures for all the criteria established in Appendix C are not readily available. These values are estimated to be conservative.

3.4.6 Stair Openings Through Stiffening Rings. When a stair opening is installed through a stiffening ring, the section modulus of that portion of the ring, outside the opening and including the transition section, shall conform to the requirements of para. 3.4.2. The shell adjacent to such an opening shall be stiffened with an angle or a bar, the wide side of which is placed in a horizontal plane. The other sides of the opening shall be stiffened with an angle or a bar, the wide side of which is placed in a vertical plane.

The cross-sectional area of these rim stiffeners shall be at least equivalent to the cross-sectional area of that portion of the shell included in the section modulus calculations of the stiffening ring [see para. 3.4.2(c)]. These stiffeners, or additional members, shall provide a toeboard around the opening. The stiffening members shall extend beyond the end of the opening for a distance equal to, or greater than, the minimum depth of the regular ring sections. The end-stiffening members shall frame into the side-stiffening members and shall be connected to them in such manner as to develop their full strength.

3.4.7 Supports for Stiffening Rings. Supports shall be provided for all stiffening rings when the dimension of the horizontal leg or web exceeds 16 times the leg or web thickness. Such supports shall be spaced at intervals as required for the dead load and the vertical live load that may be placed upon the ring. However, the spacing shall not exceed 24 times the width of the outside compression flange.

Copyright ASME International
Provided by IHS under license with ASME
No reproduction or networking permitted without license from IHS
Not for Resale

3.4.8 Intermediate Wind Girder Design

(99) *(a)* The maximum height of unstiffened shell, in feet, shall not exceed:[1]

$$H_2 = 2(100t)\sqrt{\left(\frac{100t}{D}\right)^3}$$

where

D = nominal tank diameter, ft
H_2 = vertical distance between the intermediate wind girder and the top angle of the shell or the top wind girder of an open-top tank, ft
t = average shell thickness in height H_2, in.

NOTE: The thickness as furnished for the tank shell shall be used to determine the average thickness unless the purchaser specifies that the net thickness (furnished thickness less corrosion allowance) be used for calculation of the wind girder.

(b) In determining the maximum height of the unstiffened shell, an initial calculation shall be made using the thickness of the top shell course. Additional calculations shall be based on the weighted average thickness obtained by including part or all of the next lower course, or courses, until the calculated H_2 is equal to, or smaller than, the height of shell used in determining the average thickness. If H continues to calculate greater than the height of shell used in determining the average thickness, no intermediate girder is required.

(c) After establishing the location of the first intermediate girder, if required, a check of the lower shell shall be made using the first intermediate girder as the top of the tank and proceeding as outlined above.

(d) Locating the intermediate wind girder at the maximum spacing calculated by the preceding rules will usually result in the shell below the intermediate wind girder having a greater stability against wind loading than the shell above the intermediate girder. The girder may be located at a spacing less than the maximum spacing, but the lower shell must be checked for adequacy against the maximum wind pressure in accordance with the following paragraphs.

(1) Calculating the stability of the lower shell by averaging the thicknesses of the lower shell courses results in an incorrect higher value. A more correct solution is to change the width W of each shell course into a transposed width W_{tr} of each shell course, having a uniform thickness, by the following relationship:

$$W_{tr} = W\sqrt{\left(\frac{t\ \text{uniform}}{t\ \text{actual}}\right)^5}$$

(2) The sum of the transposed widths of each course will give the height of the transformed shell. For equal stability above and below the intermediate wind girder, the latter should be located at the midheight of the transformed shell. The location of the girder on the transformed shell shall be transposed to the actual shell by the foregoing thickness relationship, using the actual thickness of the shell course on which the girder will finally be located and all actual thicknesses above this course.

(3) If half the height of the transformed shell exceeds the maximum height of the unstiffened shell (based on the uniform thickness) as calculated in (a) above, a second intermediate girder shall be used in order to reduce the height of unstiffened shell to a height less than the maximum.

(e) Intermediate wind girders shall not be attached to the shell within 6 in. of a horizontal joint of the shell. When the preliminary location of a girder is within the distance from a horizontal joint, the girder shall preferably be located 6 in. below the joint, except that the maximum unstiffened shell height shall not be exceeded.

(f) The required minimum section modulus (in inches cubed) of the intermediate wind girder shall be determined by the equation in para. 3.4.2.

(1) Where the use of a transformed shell permits the intermediate wind girder to be located at a height less than H_2 calculated by the equation in (a) above, the spacing to the midheight of the transformed shell, transposed to the height of the actual shell, may be substituted for H_2 in the calculation for minimum section modulus if the girder is attached at the transposed location.

(2) The section modulus of the intermediate wind girder shall be based upon the properties of the attached members and may include a portion of the tank shell for a distance of $1.47\sqrt{Dt}$ above and below the attachment to the shell, where t is the shell thickness at the attachment.

(g) Intermediate stiffeners extending a maximum of 6 in. from the outside of the shell are permitted without need for an opening in the stiffener when the nominal stairway width is at least 24 in. For greater outward extensions of a stiffener, the stairway shall be increased

(99) [1] This equation considers inward drag on open-top tanks and internal vacuum on closed-top tanks (5 psf), a wind velocity of 100 mph, a gust factor, and a height factor. H_2 may be modified for other wind velocities by multiplying the equation by $(100/V)^2$, where V = wind velocity, mph, as specified by the purchaser. An acceptable source of the values of V for various areas of the United States can be obtained from: Paper No. 3269, Final Report of the Task Committee on Wind Forces, Committee on Loads and Stresses, Structural Division. *Trans. ASCE* 126 (Part 2): 1124–1198; 1961.

Copyright ASME International
Provided by IHS under license with ASME
No reproduction or networking permitted without license from IHS
Not for Resale

in width to provide a minimum clearance of 18 in. between the outside of the stiffener and the handrail of the stairway, subject to the approval of the purchaser. If an opening is necessary, it may be designed with an opening in a manner similar to that provided in para. 3.4.6 or the top wind girder, except that only an 18 in. width through the stiffener need be provided.

3.5 Roof Design

(99) **3.5.1 Definitions.** The definitions below shall apply to roof designs.

self-supporting bolted dome roof: a roof formed approximately to a spherical surface, supported only at its periphery, and composed of a bolted, triangulated structural frame clad with sheet.

self-supporting cone roof: a roof formed approximately to the surface of a right cone and supported only at its periphery.

self-supporting dome roof: a roof formed approximately to a spherical surface and supported only at its periphery.

self-supporting umbrella roof: a modified dome roof so formed that any horizontal section is a regular polygon with as many sides as there are roof plates; supported only at its periphery.

supported cone roof: a roof formed approximately to the surface of a right cone, with its principal support provided by either rafters on girders and columns, or rafters on trusses with or without columns.

3.5.2 General

(a) Loading. All roofs and supporting structures shall be designed to support the dead load and, in addition, a live load of 25 lb/ft^2 projected area, unless otherwise specified by the purchaser.

(99) *(b) Minimum Thickness.* The minimum thickness of all roofs, other than self-supporting bolted dome roofs, shall be $^3/_{16}$ in. nominal.

(c) Joints. Supported cone roofs satisfying the following criteria may be considered to have a frangible joint between the roof plate and top angle, which, in the case of excessive pressure, may fail before the shell-to-bottom joint:

(1) the slope shall not be greater than $^3/_4$ in. in 12 in.;

(2) the top angle shall not be larger than the minimum size specified in para. 3.3.4, but may be smaller than that required by para. 3.3.4 when a frangible joint is specified;

(3) the roof-to-shell joint detail shall comply with Fig. 3 sketch (b) or (d);

(4) roof joints shall be joined to the top angle by a $^3/_{16}$ in. fillet weld;

(5) the cross-sectional area A at the roof-to-shell joint shall not exceed $0.156W_s / Y_1$ (tan θ), where terms are as defined in paras. 3.7.3 and 3.7.4, and Y_1 is the highest yield strength of the materials in the roof-to-shell joint.

(d) Roofs that do not have a frangible joint between the roof plate and top angle shall have a suitable connection(s), as specified by the purchaser, on which an emergency venting device can be mounted. This connection is often a standard manhole without a cover.

3.5.3 Supported Cone Roofs

(a) Plate Thickness. Roof plates shall have a minimum nominal thickness of $^3/_{16}$ in. Plates for structurally supported roofs shall have a thickness span ratio so that the stress determined from Fig. 12 shall not exceed the maximum allowable tensile stress given in Table 9. The following two conditions must be evaluated:

(1) The stress due to dead load only, determined from Fig. 12, shall not exceed the appropriate value given in Table 9, and where two stresses are given for a specific alloy and temperature, the lower shall be limiting.

(2) The stress resulting from the combined dead and live loads, determined from Fig. 12, shall not exceed the appropriate value in Table 9, and where two stresses are given for a specific alloy and temperature, the higher stress may be used.

(b) Roof Slope. The slope of supported cone roofs shall be a minimum of $^3/_4$ in. in 12 in. If the rafters are set directly on chord girders, producing slightly varying rafter slopes, the slope of the flattest rafter shall conform to the specified minimum roof slope.

(c) Rafters. Rafters shall be spaced so that, in the outer ring, their centers shall be not more than 2π ft (75.4 in.) apart, measured along the circumference of the tank. The spacing on inner rings shall be not greater than $5^1/_2$ ft (66 in.). When specified by the purchaser, the lateral stability of the rafters under earthquake loading shall be considered. Rafter clips or seats shall be welded to the tank shell. Roof plates shall not be attached to the supporting members.

(d) Columns. Structural shapes or pipes shall be used for roof columns. Clip guides shall be welded on tank bottoms to prevent lateral movement of column bases.

(e) Other Attachments. All other structural attachments shall be either bolted, riveted, or welded.

Copyright ASME International
Provided by IHS under license with ASME
No reproduction or networking permitted without license from IHS
Not for Resale

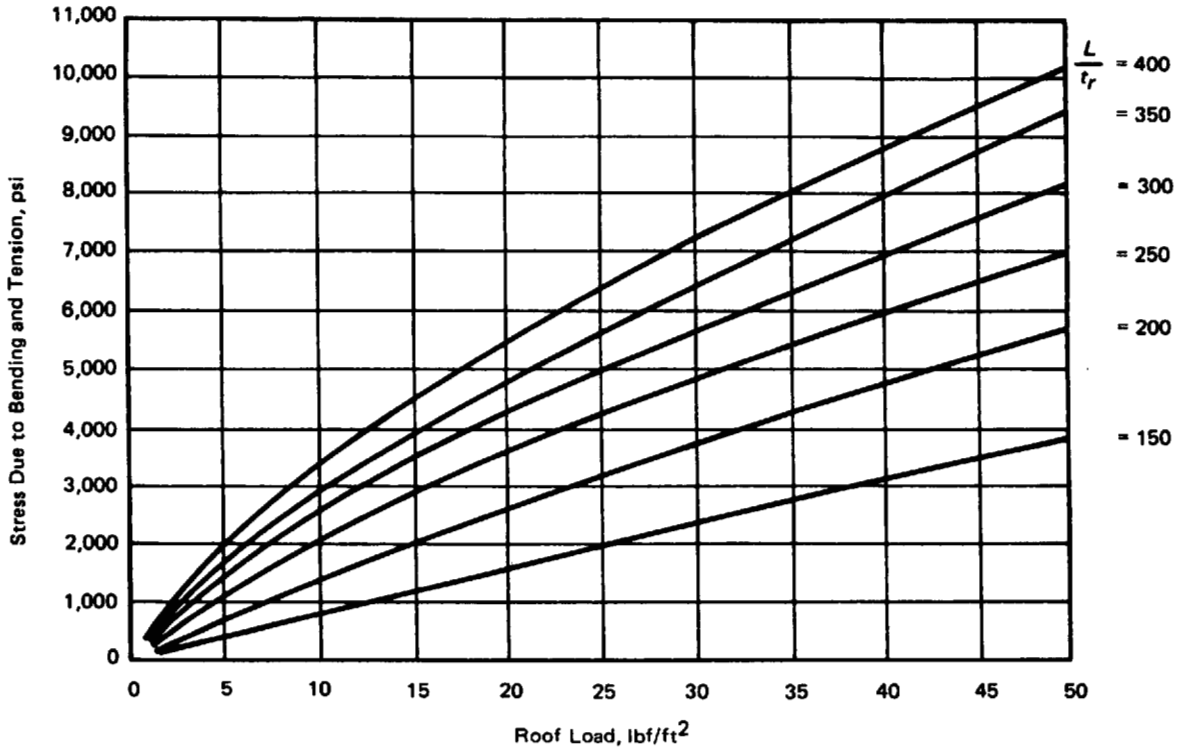

L = maximum rafter spacing, in. [see para. 3.5.3(a)]
t_r = thickness of roof plate, in.

FIG. 12 STRESSES ON ROOF PLATES

(f) Total Stresses in Supports. All parts of the roof-supporting structure shall be of 6061-T6 or 6063-T6 alloys and so proportioned that the sum of the allowable stresses resulting from the maximum coincident loading, in kips, shall not exceed the allowable stresses given in Tables 10 through 15. For 6061-T6 sections thicker than $^3/_8$ in. and welded with 4043 filler alloy, the maximum allowable stresses for cross sections within 1 in. of a weld shall be reduced in accordance with the footnotes to the tables.

(g) Dead Load Stresses in Supports. For temperatures of 250°F and over, stresses due to deadweight loading shall not exceed 25% of the allowable stresses shown for the alloy and temperature in Tables 11 through 13. This considers the effect of longtime application of stress.

3.5.4 Self-Supporting Cone Roofs. Self-supporting cone roofs shall conform to all of the requirements below.

(a) Slope. Maximum $\theta = 37$ deg (tangent = 9 to 12); minimum $\sin\theta = 0.165$ (slope 2 in. in 12 in.).

(b) Plate Thickness

$$t_r = \frac{D}{1414 \sin\theta}\sqrt{P}$$

but not less than $^3/_{16}$ in. nominal.

(c) Top-Angle Roof Shell Joint. The cross-sectional area of the top shell angle in square inches, plus the cross-sectional areas of the shell and roof plates within a distance of 16 times their thickness measured from their most remote point of attachment to the top shell angle, shall equal or exceed:

$$\text{Minimum } A_t = \frac{PD^2}{8f \tan\theta}$$

where

A_t = combined cross-sectional area of roof plate, shell plate, and top shell angle, in.^{2}
D = diameter of tank, ft
P = dead load of roof plus the live load, lb/ft^2
f = tensile allowable stress for the material of the roof plates, shell plates, or top shell angle,

Copyright ASME International
Provided by IHS under license with ASME
No reproduction or networking permitted without license from IHS
Not for Resale

TABLE 9 ALLOWABLE TENSILE STRESSES FOR ROOF PLATES

Alloy [Note (1)]	Temper [Note (1)]	Specified Minimum Strength, psi [Note (2)]		Allowable Tensile Stresses, psi, at Temperatures, °F, Not Exceeding [Note (3)]:						
		Tensile	Yield	100	150	200	250	300	350	400
3003	All	14,000	5,000	5,000	5,000	5,000	3,150 [Note (4)]	2,400 [Note (4)]	1,800 [Note (4)]	1,400 [Note (4)]
							4,900	4,600	4,300	3,700
Alclad 3003	All	13,000	4,500	4,500	4,500	4,500	2,850 [Note (4)]	2,150 [Note (4)]	1,600 [Note (4)]	1,250 [Note (4)]
							4,400	4,150	3,850	3,350
5050	All	18,000	6,000	6,000	6,000	6,000	6,000	5,350 [Note (4)]	2,800 [Note (4)]	1,400 [Note (4)]
								6,000	5,800	5,600
3004	All	22,000	8,500	8,500	8,500	8,500	8,500	5,750 [Note (4)]	3,800 [Note (4)]	2,350 [Note (4)]
								8,500	8,000	7,400
Alclad 3004	All	21,000	8,000	8,000	8,000	8,000	8,000	5,150 [Note (4)]	3,400 [Note (4)]	2,400 [Note (4)]
								8,000	7,200	6,650
5052, 5652	All	25,000	9,500	9,500	9,500	9,500	9,500	6,250 [Note (4)]	4,100 [Note (4)]	2,350 [Note (4)]
								9,500	9,500	8,400
5083 [Note (5)]	All	40,000	18,000	18,000	17,900	...	...	...	...	...
5086	All	35,000	14,000	14,000	13,900	...	...	...	...	...
5154, 5254	All	30,000	11,000	11,000	11,000	...	...	...	...	...
5454	All	31,000	12,000	12,000	12,000	11,700 [Note (4)]	7,400 [Note (4)]	5,500 [Note (4)]	4,100 [Note (4)]	3,000 [Note (4)]
						12,000	12,000	11,900	11,600	11,100
5456 [Note (5)]	All	42,000	19,000	19,000	18,800	...	...	...	...	...
6061, Alclad 6061	T4, T6 [Note (6)]	24,000 [Note (7)]	...	9,600	9,600	9,600	9,450	8,200 [Note (4)]	6,100 [Note (4)]	4,300 [Note (4)]
								8,850	7,450	5,650

GENERAL NOTES:
(a) Linear interpolation for intermediate temperatures is permitted.
(b) See para. 3.5.3(a).

NOTES:
(1) Designations have been established in accordance with ANSI H35.1.
(2) The strengths shown apply to the -O temper, except for 6061 and Alclad 6061.
(3) See Appendix C for basis of stress.
(4) Dead load stresses should be limited to this value.
(5) For thicknesses up to 1.500 in.
(6) For thicknesses 0.006 to 0.249 in.; for thicknesses 0.250 in. and over, corresponding tempers are T451 and T651.
(7) Strength of reduced section tensile specimen required to qualify welding procedures.

whichever is the least value, at the operating temperature (see Table 4), psi

t_r = thickness of roof plates, in.

θ = angle of cone elements with the horizontal, deg

3.5.5 Self-Supporting Dome and Umbrella Roofs. Self-supporting dome and umbrella roofs shall conform to all of the following requirements.

(a) Radius of Curvature. Maximum $R = 1.2D$; minimum $R = 0.80D$.

(b) Plate Thickness

$$t_r = \frac{R}{707}\sqrt{P}$$

but not less than $^3/_{16}$ in. nominal.

(c) Top-Angle Roof Shell Joint. The cross-sectional area of the top shell angle in square inches plus the cross-sectional areas of the shell and roof plates within

Copyright ASME International
Provided by IHS under license with ASME
No reproduction or networking permitted without license from IHS
Not for Resale

(99)

TABLE 10 ALLOWABLE TENSILE STRESSES FOR ROOF SUPPORTS
Tension on Net Section

Alloy and Temper	Maximum Temperature, °F	Allowable Stress, ksi [Note (1)]: Cross Sections Farther Than 1.0 in. From Any Weld	Allowable Stress, ksi [Note (1)]: Cross Sections Within 1.0 in. of a Weld
6061-T6	To 100	19	11 [Note (2)]
	150	19	11 [Note (2)]
	200	18	10.5 [Note (2)]
	250	17	10 [Note (2)]
	300	14.5	9.5 [Note (2)]
	350	11.5	7 [Note (2)]
	400	8	4.7 [Note (2)]
6063-T6	To 100	15	6.5
	150	14.5	6.5
	200	14	6
	250	12.5	6
	300	9	4.2
	350	5.5	2.3
	400	3.1	1.3

NOTES:
(1) See Appendix C for basis of stress.
(2) These allowable stresses apply to all material welded with 5556 to 5356 filler alloy for temperatures not exceeding 150°F, and to material $\frac{3}{8}$ in. or less in thickness welded with 4043 or 5554 filler alloy. For thicker material welded with 4043 or 5554 filler alloy, these allowable stresses shall be reduced by multiplying them by 0.8.

a distance of 16 times their thicknesses, measured from their most remote point of attachment to the top shell angle, shall equal or exceed:

$$\text{Minimum } A_t = \frac{PRD \cos \theta}{4f}$$

where

A_t = combined cross-sectional area of roof plate, shell plate, and top shell angle, in.^{2}
D = diameter of tank, ft
P = dead load of roof plus the live load, lb/ft^2
R = radius of curvature of roof, ft
f = tensile allowable stress for the material of the roof plates, shell plates, or top shell angle, whichever is the least value, at the operating temperature (see Table 4), psi
t_r = thickness of roof plates, in.
θ = angle between the roof and a horizontal plane at the roof-to-shell junction, deg

3.5.6 Self-Supporting Bolted Dome Roofs (99)

(a) Sheet Thickness. Roof sheets shall be 3003-H16 with minimum nominal thickness of 0.050 in. and attached to the structural members by clamping. Roof sheets shall not be welded. Tensile stresses shall not exceed the allowable stress given in

Alloy	Temper	Spec. Min. Strength, ksi: Tensile	Spec. Min. Strength, ksi: Yield	Allowable Tensile Stresses, psi, at Temperatures, °F, Not Exceeding: 100	150	200	250	300	350	400
3003	H16	24	21	12.5	12.5	11	9	8.5	6.5	5

for the following loads:

(1) a uniform load of 60 lb/ft^2 over the entire area of a sheet, or

(2) two concentrated loads of 250 pounds each distributed over two separate one square foot areas of any sheet.

The uniform and concentrated loads shall not be considered to act simultaneously or in combination with any other loads.

(b) Total Stresses in Supports. The roof-supporting structural members shall be 6061-T6 or 6063-T6 and proportioned so that stresses do not exceed the allowable stresses given in Tables 10 through 15. [See para. 3.5.2(a).] All roof-supporting structural members shall be of the same depth.

(c) Dead Load Stresses in Supports. For design temperatures of 250°F and over, stresses in the roof-supporting structural members due to dead load shall not exceed 25% of the allowable stresses shown in Tables 10 through 15. This considers the effect of longtime application of stress.

(d) Radius of Curvature. The maximum radius of curvature (R) shall be $1.2D$ and the minimum radius of curvature shall be $0.8D$, where D is the diameter of the tank.

(e) Gaskets and Sealants. Gaskets and sealants shall be suitable over the full range of design conditions and temperatures.

(f) General Buckling. The roof-supporting structural members shall be connected with gussets at their flanges with at least two rows of bolts in each flange and proportioned so that:

$$Ar \geq \frac{PLR^2}{E}$$

where

Copyright ASME International
Provided by IHS under license with ASME
No reproduction or networking permitted without license from IHS
Not for Resale

STD.ASME B96.1-ENGL 1999 ■ 0759670 0616322 126 ■

(99)

TABLE 11 ALLOWABLE AXIAL COMPRESSION STRESSES FOR ROOF SUPPORTS

Alloy and Temper	Maximum Temperature, °F	Cross Sections Farther Than 1.0 in. From Any Weld: Allowable Stress for Slenderness Less Than S_1, ksi	Slenderness Limit, S_1	Allowable Stress for Slenderness Between S_1 and S_2, ksi	Slenderness Limit, S_2	Allowable Stress for Slenderness Greater Than S_2, ksi	Cross Sections Within 1.0 in. of a Weld: Allowable Stress for Slenderness Less Than S_1, ksi	Slenderness Limit, S_1	Allowable Stress for Slenderness Between S_1 and S_2, ksi	Slenderness Limit, S_2	Allowable Stress for Slenderness Greater Than S_2, ksi
6061-T6	To 100	19	$\frac{L}{r} = 9.9$	$20.2 - 0.126\frac{L}{r}$	$\frac{L}{r} = 66$	$\frac{51{,}000}{(L/r)^2}$	12 [Note (2)]	$\frac{L}{r} = 64$	$20.2 - 0.126\frac{L}{r}$	$\frac{L}{r} = 66$ [Note (3)]	$\frac{51{,}000}{(L/r)^2}$
	150	19	$\frac{L}{r} = 9.8$	$19.9 - 0.125\frac{L}{r}$	$\frac{L}{r} = 65$	$\frac{50{,}000}{(L/r)^2}$	12 [Note (2)]	$\frac{L}{r} = 63$	$19.9 - 0.125\frac{L}{r}$	$\frac{L}{r} = 65$ [Note (3)]	$\frac{50{,}000}{(L/r)^2}$
	200	18	$\frac{L}{r} = 9.6$	$19.4 - 0.121\frac{L}{r}$	$\frac{L}{r} = 66$	$\frac{49{,}000}{(L/r)^2}$	12 [Note (2)]	$\frac{L}{r} = 60$	$19.4 - 0.121\frac{L}{r}$	$\frac{L}{r} = 66$ [Note (3)]	$\frac{49{,}000}{(L/r)^2}$
	250 [Note (1)]	18	$\frac{L}{r} = 9.4$	$18.6 - 0.115\frac{L}{r}$	$\frac{L}{r} = 66$	$\frac{48{,}000}{(L/r)^2}$	12 [Note (2)]	$\frac{L}{r} = 56$ [Note (3)]	$18.6 - 0.115\frac{L}{r}$	$\frac{L}{r} = 66$	$\frac{48{,}000}{(L/r)^2}$
	300 [Note (1)]	15	$\frac{L}{r} = 8.7$	$15.6 - 0.089\frac{L}{r}$	$\frac{L}{r} = 72$	$\frac{47{,}000}{(L/r)^2}$	11 [Note (2)]	$\frac{L}{r} = 53$ [Note (3)]	$15.6 - 0.089\frac{L}{r}$	$\frac{L}{r} = 72$	$\frac{47{,}000}{(L/r)^2}$
	350 [Note (1)]	11	$\frac{L}{r} = 7.3$	$11.2 - 0.055\frac{L}{r}$	$\frac{L}{r} = 84$	$\frac{46{,}000}{(L/r)^2}$	8 [Note (2)]	$\frac{L}{r} = 61$ [Note (3)]	$11.2 - 0.055\frac{L}{r}$	$\frac{L}{r} = 84$	$\frac{46{,}000}{(L/r)^2}$
	400 [Note (1)]	7	$\frac{L}{r} = 5.0$	$7.3 - 0.030\frac{L}{r}$	$\frac{L}{r} = 102$	$\frac{45{,}000}{(L/r)^2}$	5 [Note (2)]	$\frac{L}{r} = 72$ [Note (3)]	$7.3 - 0.030\frac{L}{r}$	$\frac{L}{r} = 102$	$\frac{45{,}000}{(L/r)^2}$
6063-T6	To 100	13.5	$\frac{L}{r} = 8.7$	$14.2 - 0.074\frac{L}{r}$	$\frac{L}{r} = 78$	$\frac{51{,}000}{(L/r)^2}$	6.5	...	6.5	$\frac{L}{r} = 89$	$\frac{51{,}000}{(L/r)^2}$
	150	13	$\frac{L}{r} = 8.4$	$13.6 - 0.070\frac{L}{r}$	$\frac{L}{r} = 79$	$\frac{50{,}000}{(L/r)^2}$	6.5	...	6.5	$\frac{L}{r} = 88$	$\frac{50{,}000}{(L/r)^2}$
	200	12.5	$\frac{L}{r} = 8.2$	$13.1 - 0.067\frac{L}{r}$	$\frac{L}{r} = 80$	$\frac{49{,}000}{(L/r)^2}$	6.5	...	6.5	$\frac{L}{r} = 87$	$\frac{49{,}000}{(L/r)^2}$
	250 [Note (1)]	12	$\frac{L}{r} = 7.9$	$12.5 - 0.063\frac{L}{r}$	$\frac{L}{r} = 81$	$\frac{48{,}000}{(L/r)^2}$	6.5	...	6.5	$\frac{L}{r} = 86$	$\frac{48{,}000}{(L/r)^2}$

(continued)

Copyright ASME International
Provided by IHS under license with ASME
No reproduction or networking permitted without license from IHS
Not for Resale

(99)

TABLE 11 ALLOWABLE AXIAL COMPRESSION STRESSES FOR ROOF SUPPORTS (CONT'D)

Alloy and Temper	Maximum Temperature, °F	Cross Sections Farther Than 1.0 in. From Any Weld: Allowable Stress for Slenderness Less Than S_1, ksi	Slenderness Limit, S_1	Allowable Stress for Slenderness Between S_1 and S_2, ksi	Slenderness Limit, S_2	Allowable Stress for Slenderness Greater Than S_2, ksi	Cross Sections Within 1.0 in. of a Weld: Allowable Stress for Slenderness Less Than S_1, ksi	Slenderness Limit, S_1	Allowable Stress for Slenderness Between S_1 and S_2, ksi	Slenderness Limit, S_2	Allowable Stress for Slenderness Greater Than S_2, ksi
	300 [Note (1)]	8.5	$\frac{L}{r} = 6.2$	$8.9 - 0.038\frac{L}{r}$	$\frac{L}{r} = 95$	$\frac{47{,}000}{(L/r)^2}$	4.7	...	4.7	$\frac{L}{r} = 100$	$\frac{47{,}000}{(L/r)^2}$
6063-T6	350 [Note (1)]	4.8	$\frac{L}{r} = 2.2$	$4.9 - 0.016\frac{L}{r}$	$\frac{L}{r} = 127$	$\frac{46{,}000}{(L/r)^2}$	2.5	...	2.5	$\frac{L}{r} = 136$	$\frac{46{,}000}{(L/r)^2}$
	400 [Note (1)]	...	...	$2.7 - 0.007\frac{L}{r}$	$\frac{L}{r} = 166$	$\frac{45{,}000}{(L/r)^2}$	1.5	...	1.5	$\frac{L}{r} = 173$	$\frac{45{,}000}{(L/r)^2}$

GENERAL NOTES:

(a) L = length of column between points of lateral support or twice the length of a cantilever column (except where analysis shows that a shorter length can be used), in.

(b) r = least radius of gyration of column, in.

(c) See Appendix C for basis of stress.

(d) Allowable stresses in this Table are for overall member buckling only. Lower allowable stresses may be needed for members with slender webs or flanges (such as members formed from sheet) to provide adequate safety against local buckling. *Specifications for Aluminum Structures*, published by the Aluminum Association, may be used to determine allowable stresses for such members.

NOTES:

(1) If the ratio of dead load to total load exceeds 1 to 4, the dead load stresses should be limited to one-fourth of those shown.

(2) These allowable stresses apply to all material welded with 5556 or 5356 filler alloy for temperatures not exceeding 150°F, and to material $\frac{3}{8}$ in. or less in thickness welded with 4043 or 5554 filler alloy. For thicker material welded with 4043 or 5554 filler alloy, these allowable stresses shall be reduced by multiplying them by 0.8. Allowable stresses not marked with a number in parentheses apply to material welded with either 5556 or 5356 filler alloy for temperatures not exceeding 150°F, or either 4043 or 5554 filler alloy.

(3) These slenderness limits apply to all material welded with 5556 or 5356 filler alloy for temperatures not exceeding 150°F, and to material $\frac{3}{8}$ in. or less in thickness welded with 4043 or 5554 filler alloy. For thicker material welded with 4043 or 5554 filler alloy, these slenderness limits must be adjusted to correspond to the reduced values of maximum allowable stresses indicated. [See General Note (c) above.]

Copyright ASME International
Provided by IHS under license with ASME
No reproduction or networking permitted without license from IHS
Not for Resale

(99)

TABLE 12 ALLOWABLE BENDING STRESSES FOR ROOF SUPPORTS
Compression in Extreme Fibers of Shapes, Girders, and Built-up Members Subjected to Bending

		Cross Sections Farther Than 1.0 in. From Any Weld					Cross Sections Within 1.0 in. of a Weld				
Alloy and Temper	Maximum Temperature, °F	Allowable Stress for Slenderness Less Than S_1, ksi	Slenderness Limit, S_1	Allowable Stress for Slenderness Between S_1 and S_2, ksi	Slenderness Limit, S_2	Allowable Stress for Slenderness Greater Than S_2, ksi	Allowable Stress for Slenderness Less Than S_1, ksi	Slenderness Limit, S_1	Allowable Stress for Slenderness Between S_1 and S_2, ksi	Slenderness Limit, S_2	Allowable Stress for Slenderness Greater Than S_2, ksi
6061-T6	To 100	21	$\frac{L_b}{r_v} = 21$	$23.9 - 0.124\frac{L_b}{r_v}$	$\frac{L_b}{r_v} = 79$	$\frac{87{,}000}{(L_b/r_v)^2}$	12 [Note (2)]	...	12 [Note (2)]	$\frac{L_b}{r_v} = 85$ [Note (3)]	$\frac{87{,}000}{(L_b/r_v)^2}$
	150	21	$\frac{L_b}{r_v} = 21$	$23.6 - 0.123\frac{L_b}{r_v}$	$\frac{L_b}{r_v} = 78$	$\frac{85{,}000}{(L_b/r_v)^2}$	12 [Note (2)]	...	12 [Note (2)]	$\frac{L_b}{r_v} = 84$ [Note (3)]	$\frac{85{,}000}{(L_b/r_v)^2}$
	200	20	$\frac{L_b}{r_v} = 21$	$22.9 - 0.119\frac{L_b}{r_v}$	$\frac{L_b}{r_v} = 79$	$\frac{84{,}000}{(L_b/r_v)^2}$	12 [Note (2)]	...	12 [Note (2)]	$\frac{L_b}{r_v} = 84$ [Note (3)]	$\frac{84{,}000}{(L_b/r_v)^2}$
	250 [Note (1)]	20	$\frac{L_b}{r_v} = 21$	$22.0 - 0.113\frac{L_b}{r_v}$	$\frac{L_b}{r_v} = 80$	$\frac{82{,}000}{(L_b/r_v)^2}$	12 [Note (2)]	...	12 [Note (2)]	$\frac{L_b}{r_v} = 83$	$\frac{82{,}000}{(L_b/r_v)^2}$
	300 [Note (1)]	17	$\frac{L_b}{r_v} = 21$	$18.4 - 0.088\frac{L_b}{r_v}$	$\frac{L_b}{r_v} = 86$	$\frac{80{,}000}{(L_b/r_v)^2}$	11 [Note (2)]	$\frac{L_b}{r_v} = 86$ [Note (3)]	$18.4 - 0.088\frac{L_b}{r_v}$	$\frac{L_b}{r_v} = 86$	$\frac{80{,}000}{(L_b/r_v)^2}$
	350 [Note (1)]	12	$\frac{L_b}{r_v} = 21$	$13.3 - 0.054\frac{L_b}{r_v}$	$\frac{L_b}{r_v} = 100$	$\frac{78{,}000}{(L_b/r_v)^2}$	8 [Note (2)]	$\frac{L_b}{r_v} = 99$ [Note (3)]	$13.3 - 0.054\frac{L_b}{r_v}$	$\frac{L_b}{r_v} = 100$	$\frac{78{,}000}{(L_b/r_v)^2}$
	400 [Note (1)]	8	$\frac{L_b}{r_v} = 21$	$8.7 - 0.029\frac{L_b}{r_v}$	$\frac{L_b}{r_v} = 122$	$\frac{76{,}000}{(L_b/r_v)^2}$	5 [Note (2)]	$\frac{L_b}{r_v} = 119$ [Note (3)]	$8.7 - 0.029\frac{L_b}{r_v}$	$\frac{L_b}{r_v} = 122$	$\frac{76{,}000}{(L_b/r_v)^2}$
6063-T6	To 100	15	$\frac{L_b}{r_v} = 22$	$16.7 - 0.073\frac{L_b}{r_v}$	$\frac{L_b}{r_v} = 94$	$\frac{87{,}000}{(L_b/r_v)^2}$	6.5	...	6.5	$\frac{L_b}{r_v} = 116$	$\frac{87{,}000}{(L_b/r_v)^2}$
	150	14.5	$\frac{L_b}{r_v} = 22$	$16.0 - 0.069\frac{L_b}{r_v}$	$\frac{L_b}{r_v} = 95$	$\frac{85{,}000}{(L_b/r_v)^2}$	6.5	...	6.5	$\frac{L_b}{r_v} = 114$	$\frac{85{,}000}{(L_b/r_v)^2}$
	200	14	$\frac{L_b}{r_v} = 22$	$15.5 - 0.066\frac{L_b}{r_v}$	$\frac{L_b}{r_v} = 96$	$\frac{84{,}000}{(L_b/r_v)^2}$	6.5	...	6.5	$\frac{L_b}{r_v} = 114$	$\frac{84{,}000}{(L_b/r_v)^2}$
	250 [Note (1)]	13.5	$\frac{L_b}{r_v} = 21$	$14.7 - 0.062\frac{L_b}{r_v}$	$\frac{L_b}{r_v} = 97$	$\frac{82{,}000}{(L_b/r_v)^2}$	6.5	...	6.5	$\frac{L_b}{r_v} = 112$	$\frac{82{,}000}{(L_b/r_v)^2}$

(continued)

Copyright ASME International
Provided by IHS under license with ASME
No reproduction or networking permitted without license from IHS
Not for Resale

(99)

TABLE 12 ALLOWABLE BENDING STRESSES FOR ROOF SUPPORTS (CONT'D)
Compression in Extreme Fibers of Shapes, Girders, and Built-up Members Subjected to Bending

		Cross Sections Farther Than 1.0 in. From Any Weld					Cross Sections Within 1.0 in. of a Weld				
Alloy and Temper	Maximum Temperature, °F	Allowable Stress for Slenderness Less Than S_1, ksi	Slenderness Limit, S_1	Allowable Stress for Slenderness Between S_1 and S_2, ksi	Slenderness Limit, S_2	Allowable Stress for Slenderness Greater Than S_2, ksi	Allowable Stress for Slenderness Less Than S_1, ksi	Slenderness Limit, S_1	Allowable Stress for Slenderness Between S_1 and S_2, ksi	Slenderness Limit, S_2	Allowable Stress for Slenderness Greater Than S_2, ksi
	300 [Note (1)]	9.5	$\frac{L_b}{r_v} = 22$	$10.5 - 0.038\frac{L_b}{r_v}$	$\frac{L_b}{r_v} = 114$	$\frac{80{,}000}{(L_b/r_v)^2}$	4.7	...	4.7	$\frac{L_b}{r_v} = 130$	$\frac{80{,}000}{(L_b/r_v)^2}$
6063-T6	350 [Note (1)]	5.5	$\frac{L_b}{r_v} = 22$	$5.7 - 0.015\frac{L_b}{r_v}$	$\frac{L_b}{r_v} = 153$	$\frac{78{,}000}{(L_b/r_v)^2}$	2.5	...	2.5	$\frac{L_b}{r_v} = 177$	$\frac{78{,}000}{(L_b/r_v)^2}$
	400 [Note (1)]	3.1	$\frac{L_b}{r_v} = 22$	$3.2 - 0.007\frac{L_b}{r_v}$	$\frac{L_b}{r_v} = 200$	$\frac{76{,}000}{(L_b/r_v)^2}$	1.5	...	1.5	$\frac{L_b}{r_v} = 225$	$\frac{76{,}000}{(L_b/r_v)^2}$

GENERAL NOTES:

(a) L_b = length of beam between points at which the compression flange is supported against lateral movement or length of cantilever beam from free end to point at which the compression flange is supported against lateral movement, in.

(b) r_v = radius of gyration of beam about axis parallel to web, in. (For beams that are unsymmetrical about the horizontal axis, r_v should be calculated as though both flanges were the same as the compression flange.)

(c) Rafters with compression flanges in direct contact with the roof plates that they support may be considered to have adequate and continuous lateral support; therefore, allowable stresses for zero length may be used.

(d) See Appendix C for basis of stress.

(e) Allowable stresses in this Table are for overall member buckling only. Lower allowable stresses may be needed for members with slender webs or flanges (such as members formed from sheet) to provide adequate safety against local buckling. *Specifications for Aluminum Structures,* published by the Aluminum Association, may be used to determine allowable stresses for such members.

NOTES:

(1) If the ratio of dead load to total load exceeds 1 to 4, the dead load stresses should be limited to one-fourth of those shown.

(2) These allowable stresses apply to all material welded with 5556 or 5356 filler alloy for temperatures not exceeding 150°F, and to material $\frac{3}{8}$ in. or less in thickness welded with 4043 or 5554 filler alloy. For thicker material welded with 4043 or 5554 filler alloy, these allowable stresses shall be reduced by multiplying them by 0.8. Allowable stresses not marked with a number in parentheses apply to material welded with either 5556 or 5356 filler alloy for temperatures not exceeding 150°F, or either 4043 or 5554 filler alloy.

(3) These slenderness limits apply to all material welded with 5556 or 5356 filler alloy for temperatures not exceeding 150°F, and to material $\frac{3}{8}$ in. or less in thickness welded with 4043 or 5554 filler alloy. For thicker material welded with 4043 or 5554 filler alloy, these slenderness limits must be adjusted to correspond to the reduced values of maximum allowable stresses indicated. [See General Note (d) above.]

Copyright ASME International
Provided by IHS under license with ASME
No reproduction or networking permitted without license from IHS
Not for Resale

STD·ASME B96.1-ENGL 1999 ■ 0759670 0616326 871 ■

(99)

TABLE 13 ALLOWABLE SHEAR STRESSES FOR ROOF SUPPORTS
Shear in Webs of Beams and Girders

Alloy and Temper	Maximum Temperature, °F	Cross Sections Farther Than 1.0 in. From Any Weld: Allowable Stress for Slenderness Less Than S_1, ksi	Slenderness Limit, S_1	Allowable Stress for Slenderness Between S_1 and S_2, ksi	Slenderness Limit, S_2	Allowable Stress for Slenderness Greater Than S_2, ksi	Cross Sections Within 1.0 in. of a Weld: Allowable Stress for Slenderness Less Than S_1, ksi	Slenderness Limit, S_1	Allowable Stress for Slenderness Greater Than S_2, ksi
6061-T6	To 100	12	$\frac{h}{t} = 36$	$15.7 - 0.099\frac{h}{t}$	$\frac{h}{t} = 65$	$\frac{39{,}000}{(h/t)^2}$	7.5 [Note (2)]	$\frac{h}{t} = 72$ [Note (3)]	$\frac{39{,}000}{(h/t)^2}$
	150	12	$\frac{h}{t} = 35$	$15.7 - 0.100\frac{h}{t}$	$\frac{h}{t} = 64$	$\frac{38{,}000}{(h/t)^2}$	7.5 [Note (2)]	$\frac{h}{t} = 71$ [Note (3)]	$\frac{38{,}000}{(h/t)^2}$
	200	11.5	$\frac{h}{t} = 36$	$14.8 - 0.093\frac{h}{t}$	$\frac{h}{t} = 65$	$\frac{37{,}000}{(h/t)^2}$	7 [Note (2)]	$\frac{h}{t} = 73$ [Note (3)]	$\frac{37{,}000}{(h/t)^2}$
	250 [Note (1)]	11	$\frac{h}{t} = 36$	$14.0 - 0.086\frac{h}{t}$	$\frac{h}{t} = 67$	$\frac{36{,}000}{(h/t)^2}$	6.5 [Note (2)]	$\frac{h}{t} = 74$ [Note (3)]	$\frac{36{,}000}{(h/t)^2}$
	300 [Note (1)]	9	$\frac{h}{t} = 37$	$11.5 - 0.065\frac{h}{t}$	$\frac{h}{t} = 73$	$\frac{36{,}000}{(h/t)^2}$	5.5 [Note (2)]	$\frac{h}{t} = 81$ [Note (3)]	$\frac{36{,}000}{(h/t)^2}$
	350 [Note (1)]	7	$\frac{h}{t} = 39$	$8.7 - 0.043\frac{h}{t}$	$\frac{h}{t} = 83$	$\frac{35{,}000}{(h/t)^2}$	4.1 [Note (2)]	$\frac{h}{t} = 92$ [Note (3)]	$\frac{35{,}000}{(h/t)^2}$
	400 [Note (1)]	4.7	$\frac{h}{t} = 43$	$5.7 - 0.023\frac{h}{t}$	$\frac{h}{t} = 101$	$\frac{34{,}000}{(h/t)^2}$	2.7 [Note (2)]	$\frac{h}{t} = 112$ [Note (3)]	$\frac{34{,}000}{(h/t)^2}$
6063-T6	To 100	8.5	$\frac{h}{t} = 39$	$10.7 - 0.056\frac{h}{t}$	$\frac{h}{t} = 79$	$\frac{39{,}000}{(h/t)^2}$	3.9	$\frac{h}{t} = 100$	$\frac{39{,}000}{(h/t)^2}$
	150	8.5	$\frac{h}{t} = 39$	$10.7 - 0.056\frac{h}{t}$	$\frac{h}{t} = 78$	$\frac{38{,}000}{(h/t)^2}$	3.6	$\frac{h}{t} = 103$	$\frac{38{,}000}{(h/t)^2}$
	200	8	$\frac{h}{t} = 39$	$10.3 - 0.054\frac{h}{t}$	$\frac{h}{t} = 78$	$\frac{37{,}000}{(h/t)^2}$	3.5	$\frac{h}{t} = 103$	$\frac{37{,}000}{(h/t)^2}$
	250 [Note (1)]	8	$\frac{h}{t} = 39$	$9.9 - 0.051\frac{h}{t}$	$\frac{h}{t} = 79$	$\frac{36{,}000}{(h/t)^2}$	3.3	$\frac{h}{t} = 104$	$\frac{36{,}000}{(h/t)^2}$

(continued)

Copyright ASME International
Provided by IHS under license with ASME
No reproduction or networking permitted without license from IHS
Not for Resale

(99)

TABLE 13 ALLOWABLE SHEAR STRESSES FOR ROOF SUPPORTS (CONT'D)
Shear in Webs of Beams and Girders

		Cross Sections Farther Than 1.0 in. From Any Weld					Cross Sections Within 1.0 in. of a Weld		
Alloy and Temper	Maximum Temperature, °F	Allowable Stress for Slenderness Less Than S_1, ksi	Slenderness Limit, S_1	Allowable Stress for Slenderness Between S_1 and S_2, ksi	Slenderness Limit, S_2	Allowable Stress for Slenderness Greater Than S_2, ksi	Allowable Stress for Slenderness Less Than S_1, ksi	Slenderness Limit, S_1	Allowable Stress for Slenderness Greater Than S_2, ksi
	300 [Note (1)]	5.5	$\frac{h}{t} = 42$	$6.7 - 0.029\frac{h}{t}$	$\frac{h}{t} = 95$	$\frac{36{,}000}{(h/t)^2}$	2.4	$\frac{h}{t} = 122$	$\frac{36{,}000}{(h/t)^2}$
6063-T6	350 [Note (1)]	3.1	$\frac{h}{t} = 48$	$3.7 - 0.012\frac{h}{t}$	$\frac{h}{t} = 127$	$\frac{35{,}000}{(h/t)^2}$	1.3	$\frac{h}{t} = 164$	$\frac{35{,}000}{(h/t)^2}$
	400 [Note (1)]	1.6	$\frac{h}{t} = 55$	$1.9 - 0.004\frac{h}{t}$	$\frac{h}{t} = 175$	$\frac{34{,}000}{(h/t)^2}$	0.7	$\frac{h}{t} = 220$	$\frac{34{,}000}{(h/t)^2}$

GENERAL NOTES:
(a) h = clear height of web, in.
(b) t = thickness of web, in.
(c) See Appendix C for basis of stress.

NOTES:
(1) If the ratio of dead load to total load exceeds 1 to 4, the dead load stresses should be limited to one-fourth of those shown.
(2) These allowable stresses apply to all material welded with 5556 or 5356 filler alloy for temperatures not exceeding 150°F, and to material $\frac{3}{8}$ in. or less in thickness welded with 4043 or 5554 filler alloy. For thicker material welded with 4043 or 5554 filler alloy, these allowable stresses shall be reduced by multiplying them by 0.8. Allowable stresses not marked with a number in parentheses apply to material welded with either 5556 or 5356 filler alloy for temperatures not exceeding 150°F, or either 4043 or 5554 filler alloy.
(3) These slenderness limits apply to all material welded with 5556 or 5356 filler alloy for temperatures not exceeding 150°F, and to material $\frac{3}{8}$ in. or less in thickness welded with 4043 or 5554 filler alloy. For thicker material welded with 4043 or 5554 filler alloy, these slenderness limits must be adjusted to correspond to the reduced values of maximum allowable stresses indicated. [See General Note (c) above.]

Copyright ASME International
Provided by IHS under license with ASME
No reproduction or networking permitted without license from IHS
Not for Resale

STD·ASME B96.1-ENGL 1999 ■ 0759670 0616328 644 ■

TABLE 14 ALLOWABLE SHEAR AND TENSION STRESSES FOR BOLTS AND RIVETS FOR ROOF SUPPORTS (99)

	Allowable Shear Stress, ksi, at Temperatures, °F, Not Exceeding:						
Description of Rivet or Bolt	**100**	**150**	**200**	**250**	**300**	**350**	**400**
6061-T6 rivets, driven cold	11	11	10.5	10	8.5	6.5	4.7
6061-T43 rivets, driven at temperatures of 990°F to 1,050°F, inclusive	9	8.5	8.5	8	7.5	6.5	4.7
2024-T4 bolts	16	15	14.5	12.5	10	8	6
6061-T6 bolts	11	11	10.5	10	8.5	6.5	4.7
	Allowable Tension Stress, ksi, at Temperatures, °F, Not Exceeding:						
Description of Bolt	**100**	**150**	**200**	**250**	**300**	**350**	**400**
2024-T4 bolts	26	26	25	22	15	9.5	6.5
6061-T6 bolts	18	17	17	16	13.5	10.5	7.5

GENERAL NOTES:
(a) Rivets and bolts shall not be welded.
(b) See Appendix C for basis of stress.

A = cross-sectional area of the roof-supporting structural members, in.^{2}
E = modulus of elasticity of the roof-supporting structural members, lb/in.^{2}
L = average length of the roof-supporting structural members, in.
P = dead and live loads, lb/ft^2 [see para. 3.5.2 (a)]
R = radius of roof, ft
r = radius of gyration of the roof-supporting structural members taken about an axis for buckling normal to the dome surface, in.

(g) Top-Angle Roof Joint. The sum of the cross-sectional areas of: the top angle; the shell plate within a distance of 16 times its thickness, measured from its most remote point of attachment to the top angle; and the net area of the base ring member of the roof, shall be such that:

$$A_t \geq \frac{PD^2}{8f \tan \beta}$$

where

A_t = combined cross-sectional area of the top angle, shell plate, and net area of the roof base ring member, in.^{2}
D = tank diameter, ft
P = dead load of roof plus the live load, lb/ft^2 [see para. 3.5.2 (a)]
f = tensile allowable stress for the roof base ring member, shell plate, or top angle, whichever is the least, at the operating temperature (see Tables 4 and 10), lb/in.^{2}
n = number of roof-supporting structural member attachment points to the top angle
β = angle of the roof to horizontal at its base

The roof-supporting structural frame shall be connected to the tank shell so as to transmit horizontal reactions to the shell.

3.5.7 Roof Plate Stiffeners for Self-Supporting Roofs. (99) With the exception of self-supporting bolted dome roofs, all types of self-supporting roofs may have the roof plates stiffened by sections welded to them, but roof plate thickness shall not be less than $^3/_{16}$ in.

3.6 Connections and Appurtenances

3.6.1 General

(a) Strength. When connections and appurtenances are installed in tanks conforming to this Standard, the use of designs as specified herein is required, except that alternative designs (for other than flush-type cleanout fittings) that provide equivalent tightness and utility are permissible provided they meet the requirements of para. 3.3.5. Consideration shall be given to the effect

Copyright ASME International
Provided by IHS under license with ASME
No reproduction or networking permitted without license from IHS
Not for Resale

TABLE 15 ALLOWABLE BEARING STRESSES FOR BOLTS, RIVETS, AND PINS FOR ROOF SUPPORTS (99)

	Rivets and Bolts [Note (1)]			Milled Surfaces and Pins		
		Allowable Stress, ksi [Note (2)]			Allowable Stress, ksi [Note (2)]	
Alloy and Temper	Maximum Temperature, °F	Cross Sections Farther Than 1.0 in. From Any Weld	Cross Sections Within 1.0 in. of a Weld	Maximum Temperature, °F	Cross Sections Farther Than 1.0 in. From Any Weld	Cross Sections Within 1.0 in. of a Weld
6061-T6	To 100	34	18 [Note (3)]	To 100	23	12 [Note (3)]
	150	33	18 [Note (3)]	150	22	12 [Note (3)]
	200	32	18 [Note (3)]	200	21	12 [Note (3)]
	250	30	17 [Note (3)]	250	20	11.5 [Note (3)]
	300	26	14.5 [Note (3)]	300	17	9.5 [Note (3)]
	350	19	10.5 [Note (3)]	350	13	7 [Note (3)]
	400	13	7 [Note (3)]	400	8.5	4.7 [Note (3)]
6063-T6	To 100	24	10	To 100	16	7
	150	23	9.5	150	16	6.5
	200	22	9	200	15	6
	250	21	8.5	250	14.5	6
	300	16	6	300	10.5	4.2
	350	8.5	3.5	350	5.5	2.3
	400	5	1.9	400	3.3	1.3

GENERAL NOTE: Bolts, rivets, and pins shall not be welded.

NOTES:

(1) These values apply for a ratio of edge distance to rivet or bolt diameter of 2 or more. For smaller ratios, multiply these allowable stresses by the ratio: edge distance/twice the rivet or bolt diameter.

(2) See Appendix C for basis of stress.

(3) These allowable stresses apply to all material welded with 5556 or 5356 filler alloy for temperatures not exceeding 150°F, and to material $^3/_8$ in. or less in thickness welded with 4043 or 5554 filler alloy. For thicker material welded with 4043 or 5554 filler alloy, these allowable stresses shall be reduced by muliplying them by 0.8.

of using components of alloys differing in strength from that of the tank shell. Flush-type cleanout fittings shall conform to the designs specified in para. 3.6.4.

(b) Appearance. Manhole necks, nozzle necks, reinforcing plates, and shell plate openings shall have all surfaces made uniform and smooth, with the corners rounded, except where such surfaces are fully covered by attachment welds (see para. 4.3).

3.6.2 Shell Manholes. Shell manhole details are given in Figs. 8, 9, 13, and Table 16. Manhole reinforcing plates, and segments thereof if the plates are not made in one piece, shall be provided with a $^1/_4$ in. diameter telltale hole (for the purpose of detecting leakage through the interior welds). Such holes shall be located substantially on the horizontal centerline and shall be open to the atmosphere.

3.6.3 Shell Nozzles

(a) Nozzles at 90 deg. Details on shell nozzles with axes perpendicular to the shell plate are given in Fig. 7 and Tables 6 and 17. Nozzle-reinforcing plates, and segments thereof if the plates are not made in one piece, shall be provided with a $^1/_4$ in. diameter telltale hole (for the purpose of detecting leakage through the interior welds). Such holes shall be located substantially on the horizontal centerline and shall be open to the atmosphere.

(b) Nozzles at Less Than 90 deg. Details and dimen- (99)

Copyright ASME International
Provided by IHS under license with ASME
No reproduction or networking permitted without license from IHS
Not for Resale

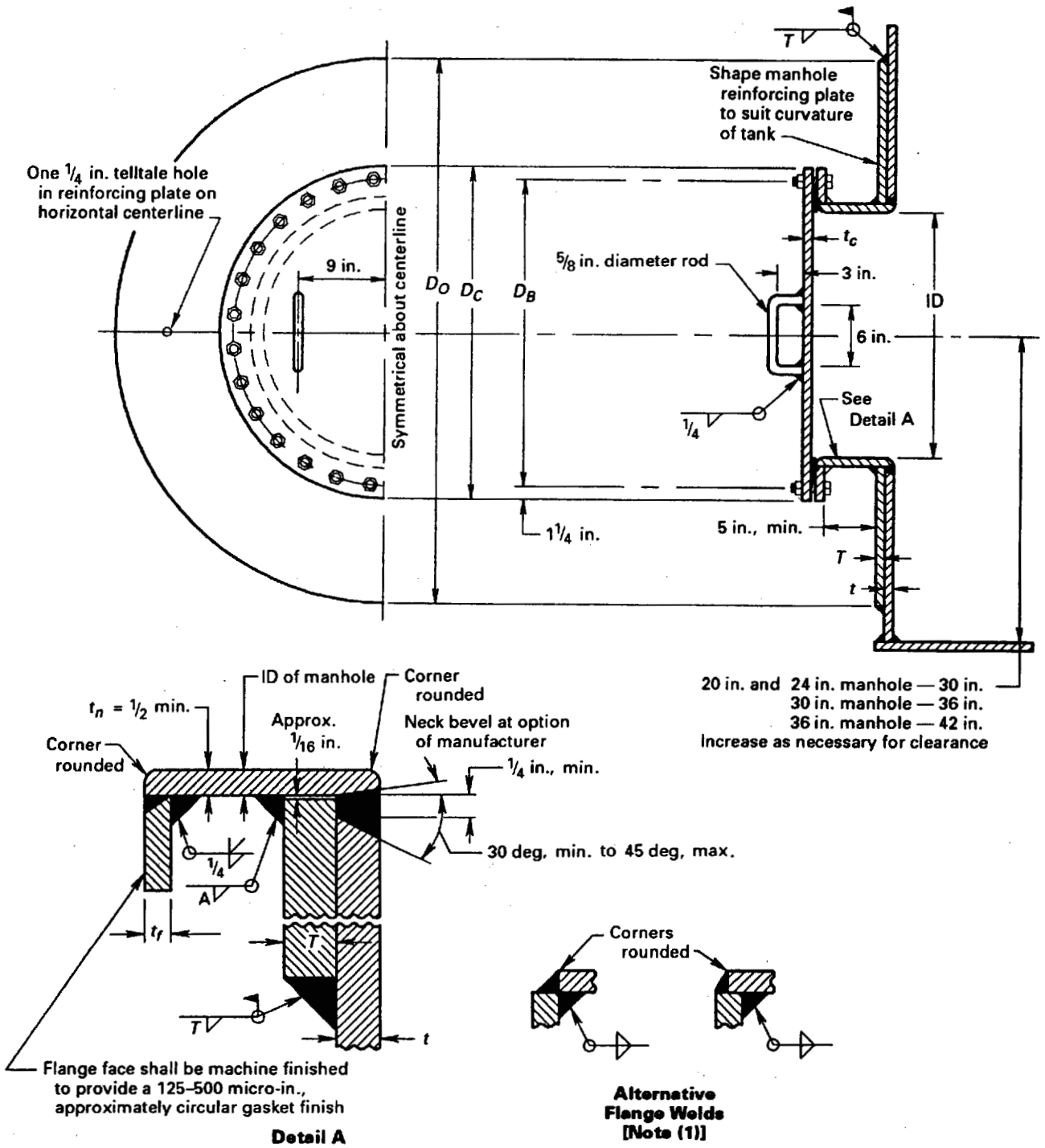

FIG. 13 SHELL MANHOLES (See Figs. 8, 9, and Tables 8 and 16)

Copyright ASME International
Provided by IHS under license with ASME
No reproduction or networking permitted without license from IHS
Not for Resale

GENERAL NOTES:

(a) Bolting shall be as follows: 20 in. and 24 in. manholes shall have $28^3/_4$ in. diameter bolts in $^7/_8$ in. diameter holes; 30 in. and 36 in. manholes shall have $42^3/_4$ in. diameter bolts in $^7/_8$ in. diameter holes. The bolt holes shall straddle the flange vertical centerline.

(b) The number and size of bolts shown are based on the strength of steel bolts. If aluminum or other bolts are used, see Table 8 for allowable bolt stress.

(c) Gasket sizes shall be as follows:
20 in. manhole — $25^3/_8$ in. OD X 20 in. ID
24 in. manhole — $29^3/_8$ in. OD X 24 in. ID
30 in. manhole — $35^3/_8$ in. OD X 30 in. ID
36 in. manhole — $41^3/_8$ in. OD X 36 in. ID
Gasket material should be $^1/_8$ in. thick sheet unless otherwise specified by purchaser.

(d) The shell nozzles of Fig. 7, 20 in. diameter and larger, may be substituted by agreement with the purchaser.

(e) If neck thickness exceeds the required minimum, see para. 3.6.2.

NOTE:

(1) The size of the weld shall equal the thickness of the thinner member being joined.

FIG. 13 SHELL MANHOLES (CONT'D) (See Figs. 8, 9, and Tables 8 and 16)

sions specified in (a) above are for nozzles installed with their axes perpendicular to the shell plate. Nozzles may be installed at an angle of other than 90 deg to the shell plate in a horizontal plane, provided the diameter of the reinforcing plate (dimension D_O in Fig. 7 and Table 17) is increased by the amount that the horizontal chord of the opening increases, as the opening changes from circular to elliptical in making the angular installation. In addition, for insertion of thermometer wells, sampling connections, or other purposes not involving the attachment of extended piping, nozzles not larger than 3 in. nominal pipe size may be installed at an angle of 15 deg or less, off-perpendicular in a vertical plane, without modification of the nozzle-reinforcing plate.

3.6.4 Flush-Type Cleanout Fittings. Flush-type cleanout fittings shall conform to para 3.3.6 and to Fig. 6, Figs. 8 through 11, and Table 7.

3.6.5 Support of Flush-Type Cleanout Fittings

(a) Earth Grade Support. When a flush-type cleanout fitting is installed on a tank resting on an earth grade without concrete or masonry walls under the tank shells, provision shall be made to support the fitting and retain the grade by either of the following methods:

(1) Install a vertical bulkhead plate under the tank along the counter of the tank shell and symmetrical with the opening, as shown in Fig. 11, Method A.

(2) Install a concrete or masonry retaining wall under the tank with its outer face conforming to the contour of the tank shell, as shown in Fig. 11, Method B.

(b) Ringwall Support. When a flush-type cleanout fitting is installed on a tank resting on a ringwall, a notch having the dimensions shown in Fig. 11, Method C, shall be provided to accommodate the cleanout fitting.

(c) Retaining Wall Support. When a flush-type cleanout fitting is installed on a tank resting on an earth grade inside a foundation retaining wall, a notch shall be provided in the retaining wall to accommodate the fitting, and a supplementary inside retaining wall shall be provided to support the fitting and retain the grade. The dimensions shall be as shown in Fig. 11, Method D.

3.6.6 Roof Manholes. Roof manholes shall conform to Fig. 14 and Table 18. If work is expected to be carried on through the manhole opening during the use of the tank, it is recommended that the roof structure around the manhole be suitably reinforced.

3.6.7 Roof Nozzles. Flanged roof nozzles shall conform to Fig. 15 and Table 19. Screwed nozzles shall conform to Fig. 16 and Table 20.

3.6.8 Drawoff Elbows. Drawoff elbow details are given in Fig. 17 and Table 21.[2] (99)

3.6.9 Drawoff Sumps. Drawoff sump details are given in Fig. 18.[2] (99)

3.6.10 Scaffold Cable Support. Supports for scaffold cables are optional. If furnished, they shall conform to Fig. 19.

[2] Other details may be used by agreement between purchaser and manufacturer.

Copyright ASME International
Provided by IHS under license with ASME
No reproduction or networking permitted without license from IHS
Not for Resale

TABLE 16 SHELL MANHOLES

Thickness of Shell and Reinforcing Plate, t and T	Size of Fillet Weld A
3/16	1/4
1/4	1/4
5/16	1/4
3/8	1/4
7/16	1/4
1/2	1/4
9/16	1/4
5/8	5/16
11/16	5/16
3/4	3/8
13/16	7/16
7/8	7/16
15/16	1/2
1	1/2
1 1/16	1/2
1 1/8	1/2
1 3/16	1/2
1 1/4	1/2
1 5/16	1/2
1 3/8	1/2
1 7/16	1/2
1 1/2	1/2

Flange and Reinforcing Plate Dimensions

Size (Inside Diameter)	D_B	D_c	D_o
20	26 1/4	28 3/4	41
24	30 1/4	32 3/4	49
30	36 1/4	38 3/4	61
36	42 1/4	44 3/4	73

GENERAL NOTES:
(a) All dimensions are in inches.
(b) See Fig. 13.

3.6.11 Threaded Connections. Threaded piping connections shall have internal threads; the threads shall conform to ANSI/ASME B1.20.1. See Section 2, footnote 1 regarding thread compounds.

3.6.12 Structural Bolting and Riveting. Any aluminum-alloy bolting or riveting for attaching structural appurtenances or for structural construction shall conform to the materials in para. 2.10.1 or 2.11; the allowable stresses for design shall conform to Tables 14 and 15; and the design, fabrication, and erection shall conform to acceptable practices for aluminum-alloy structures [see Appendix C, Section C8, (3) and (4)].

3.7 Design for Internal Pressure for Class 2 Tanks

3.7.1 General. Class 2 tanks (see para. 1.2.2) must meet the requirements of paras. 3.7.2 through 3.7.4. It is recommended that self-supporting roofs be considered for these tanks, or the roof plate thicknesses be selected such that the internal design pressure is balanced by the weight of the roof plates (see para. 1.3.3).

3.7.2 Roof-to-Shell Joint. The details of Fig. 3 are acceptable. Sketch (e) is preferred when low-cycle fatigue could be a problem, particularly with supported cone roofs having diameters larger than 50 ft. The participating compression area is shown cross-hatched in Fig. 20.

3.7.3 Required Compression Area. The area required in the roof-to-shell joint to resist the compression induced by internal pressure in the gas space shall be determined by the equation:

$$A = \frac{D^2 (P_g - 1.56 t_h)}{0.44 Y \tan \theta}$$

where

A = compression area illustrated in Fig. 20, in.^{2}
D = inside diameter of tank, ft
P_g = internal design pressure, oz/in.^{2}
Y = yield strength from Table 22 for the weakest material in the compression region, psi
t_h = thickness of roof exclusive of corrosion allowance, in.
θ = angle between the roof and a horizontal plane at the roof-to-shell junction, deg

If the available compression area in the roof-to-shell joint, as constructed to satisfy the requirements of paras. 3.3 and 3.5, is less than the area required by this paragraph, then the available area must be increased by using a thicker top shell course or roof, a larger or thicker top angle, or by adding a bar or other structural member within the limits of W_c. Details for this added compression member shall comply with the requirements for top angles in paras. 3.1.4(b) and 3.1.4(h)(3).

3.7.4 Internal Design Pressure

(a) The internal design pressure P for a tank not anchored to a foundation to resist internal pressure may

Copyright ASME International
Provided by IHS under license with ASME
No reproduction or networking permitted without license from IHS
Not for Resale

TABLE 17 FLANGED NOZZLES

Size of Nozzle	Outside Diameter of Pipe	Minimum Nominal Thickness of Flanged Nozzle Pipe Wall [Note (1)]	Diameter of Hole in Reinforcing Plate, D_R	Diameter of Reinforcing Plate, D_o	Minimum Distance From Shell to Flange Face, J	Minimum Distance From Bottom of Tank to Center of Nozzle	
						Regular Type, H	Low Type, C
24	24	0.50	24 1/8	50 1/2	12	28 1/2	25 1/4
20	20	0.50	20 1/8	42 1/2	11	24 1/2	21 1/4
18	18	0.50	18 1/8	38 1/2	10	22 1/2	19 1/4
16	16	0.50	16 1/8	34 1/2	10	20 1/2	17 1/4
14	14	0.50	14 1/8	30 1/2	10	18 1/2	15 1/4
12	12 3/4	0.50	12 7/8	28	9	17	14
10	10 3/4	0.50	10 7/8	24	9	15	12
8	8 5/8	0.50	8 3/4	19 1/2	8	13	9 3/4
6	6 5/8	0.432	6 3/4	15 3/4	8	11	7 7/8
4	4 1/2	0.337	4 5/8	12	7	9	6
3	3 1/2	0.300	3 5/8	10 1/2	7	8	5 1/4
2 [Note (2)]	2 3/8	0.218	2 1/2	...	6	7	3 1/2
1 1/2 [Note (2)]	1.90	0.200	2	...	6	6	3

GENERAL NOTES:
(a) All dimensions are in inches.
(b) See Fig. 7.

NOTES:
(1) Pipe made from butt welded plate with complete penetration and complete fusion may be used.
(2) Flanged and screwed nozzles in 2 in. pipe size and smaller do not require reinforcing plates. Reinforcing plates may be used if desired. Flange dimensions shall conform to ASME B16.5.

be determined by the following equation [subject to the limitations of P_{max} in (b) below]:

$$P = \frac{0.44Y\,A\,\tan\theta}{D^2} + 1.56t_h$$

(Terms are defined in para. 3.7.3.)

(99) *(b)* The internal pressure, P_{max}, limited by uplift at the base of the shell, shall not exceed the following:

$$P_{max} = \frac{0.142W_s}{D^2} + 1.56t_h - \frac{0.566FM}{D^3}$$

where

F = factor by which specified design wind is multiplied when considering this combination of loading; use F = 0.75 unless otherwise specified by the purchaser

M = overturning moment from wind pressure, ft-lb

P_{max} = internal pressure, oz/in.^{2}

W_s = weight of shell (excluding roof) plus any framing supported by the shell and roof, lb

(Other terms are defined in para. 3.7.3.)

3.8 Design for Internal Pressure for Class 3 Tanks

3.8.1 General. Class 3 tanks (see para. 1.2.3) must meet the requirements of paras. 3.8.2 through 3.8.6. Because of the wide variation in material properties, these requirements may result in the roof-to-shell joint being stronger than the anchorage used to hold down the tank.

3.8.2 Tank Shell. The shell thickness shall be determined using para. 3.3.3 except that the internal design pressure in terms of equivalent head H_p shall be added to the design liquid height H.

$$H_p = \frac{P_g}{6.93G}$$

Copyright ASME International
Provided by IHS under license with ASME
No reproduction or networking permitted without license from IHS
Not for Resale

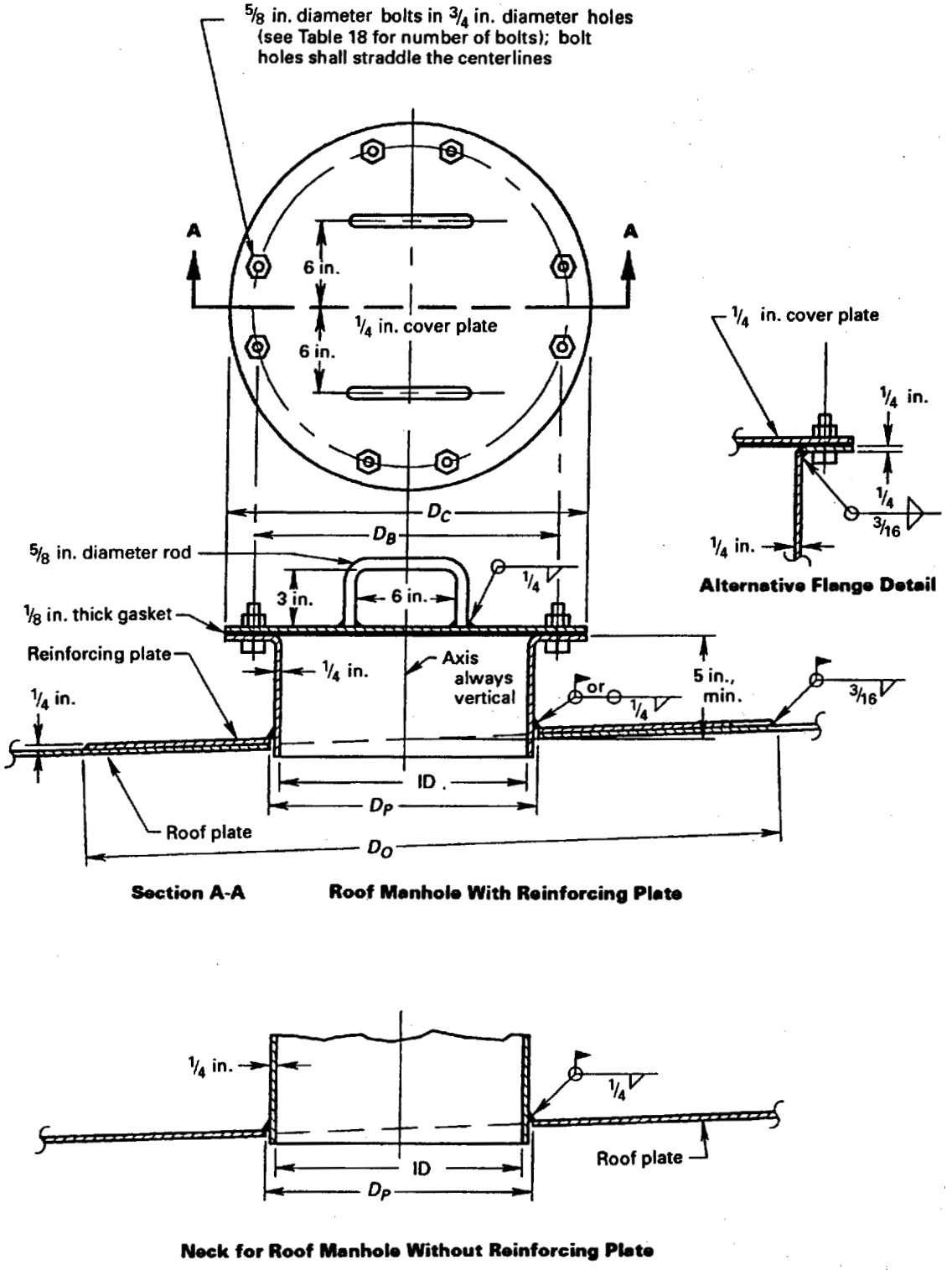

FIG. 14 ROOF MANHOLES (See Table 18)

Copyright ASME International
Provided by IHS under license with ASME
No reproduction or networking permitted without license from IHS
Not for Resale

TABLE 18 ROOF MANHOLES

Size of Manhole	Diameter of Neck Inside Diameter	Diameter of Cover Plate, D_c	Diameter of Bolt Circle, D_s	Number of Bolts	Diameter of Gasket		Diameter of Hole in Roof Plate or Reinforcing Plate, D_P	Outside Diameter of Reinforcing Plate, D_o
					Inside Diameter	Outside Diameter		
20	20	26	23 1/2	16	21 1/2	26	20 5/8	42
24	24	30	27 1/2	20	25 1/2	30	24 5/8	46

GENERAL NOTES:
(a) All dimensions are in inches.
(b) See Fig. 14.

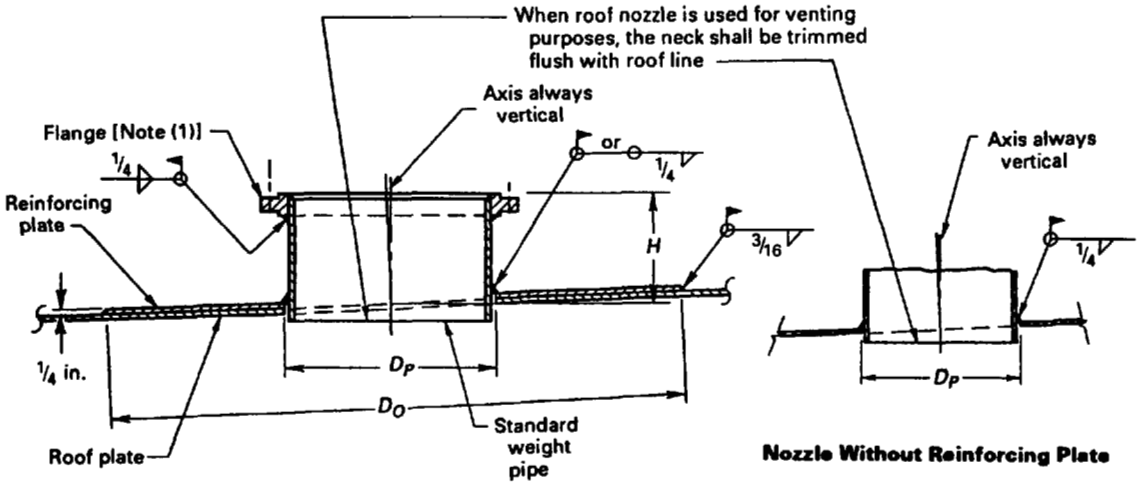

NOTE:
(1) Flange dimensions shall conform to ASME B16.5; plate flanges dimensioned to ASME B16.5 are acceptable. When excessive piping forces are involved, the addition of groove welds at the nozzle attachments is recommended.

FIG. 15 FLANGED ROOF NOZZLES (See Table 19)

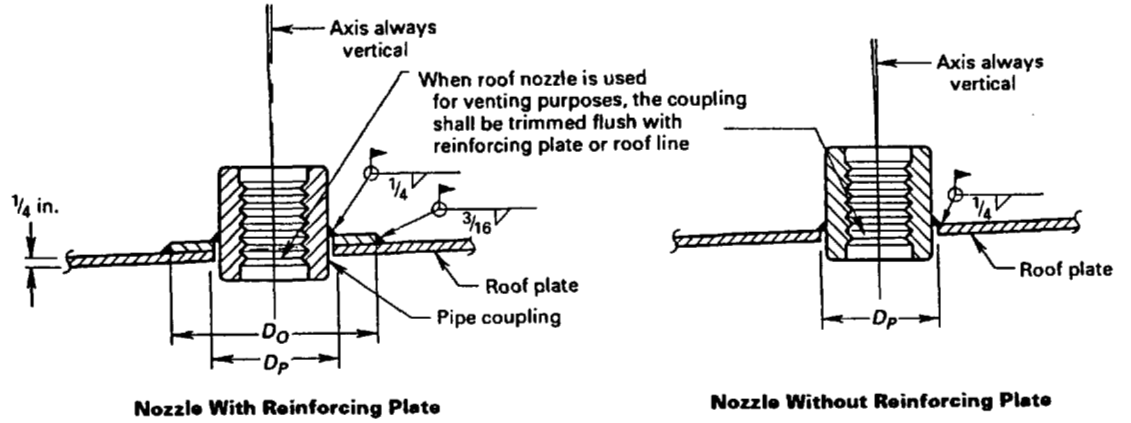

FIG. 16 SCREWED ROOF NOZZLES (See Table 20)

Copyright ASME International
Provided by IHS under license with ASME
No reproduction or networking permitted without license from IHS
Not for Resale

TABLE 19 FLANGED ROOF NOZZLES

Nominal Size of Nozzle	Outside Diameter of Pipe Neck	Diameter of Hole in Roof Plate or Reinforcing Plate, D_P	Minimum Height of Nozzle, H	Outside Diameter of Reinforcing Plate, D_o
1½	1.900	2	6	5 [Note (1)]
2	2⅜	2½	6	7 [Note (1)]
3	3½	3⅝	6	9 [Note (1)]
4	4½	4⅝	6	11 [Note (1)]
6	6⅝	6¾	6	15 [Note (1)]
8	8⅝	8⅞	6	18
10	10¾	11	8	22
12	12¾	13	8	24

GENERAL NOTES:
(a) All dimensions are in inches.
(b) See Fig. 15.

NOTE:
(1) Reinforcing plates are not required on 6 in. or smaller nozzles, but may be used if desired.

(99) **TABLE 20 SCREWED ROOF NOZZLES**

Nominal Size of Nozzle	Nominal Size of Coupling	Diameter of Hole in Roof Plate or Reinforcing Plate, D_P	Outside Diameter of Reinforcing Plate, D_o
¾	¾	1 7/16	4 [Note (1)]
1	1	1 23/32	4½ [Note (1)]
1½	1½	2 11/32	5 [Note (1)]
2	2	3	7 [Note (1)]
3	3	4 ⅛	9 [Note (1)]
4	4	5 11/32	11 [Note (1)]
6	6	7 17/32	15 [Note (1)]
8	8	9 ⅞	18
10	10	12	22
12	12	14 ¼	24

GENERAL NOTES:
(a) All dimensions are in inches.
(b) See Fig. 16.

NOTE:
(1) Reinforcing plates are not required on 6 in. or smaller nozzles, but may be used if desired.

where
G = see para. 3.3.3
H_p = equivalent head, ft
P_g = design internal pressure, oz/in.^{2}

3.8.3 Tank Roof. The roof shall be a self-supporting cone or dome.

3.8.4 Required Compression Area. The area required in the roof-to-shell joint to resist the compression induced by internal pressure shall be computed from the following equations:

$$W_h = 2.08\sqrt{\frac{Rt_h}{\sin\theta}}$$

$$W_c = 2.08\sqrt{Rt_c}$$

$$A = \frac{1.5P_g R}{Y}\left[\frac{6R}{\tan\theta} - \frac{W_h}{z\sin\theta} - W_c\right]$$

where
A = required area, in.^{2}
P_g = design internal pressure, oz/in.^{2}
R = radius of tank, ft
Y = yield strength from Table 22 for the weakest material in the compression region, psi
t_c = thickness of cylindrical shell exclusive of corrosion allowance, in.
t_h = thickness of roof exclusive of corrosion allowance (see Fig. 21), in.
z = 1.0 for cones; 2.0 for domes
θ = angle of roof with horizontal plane at the point where it intersects the shell, deg

Roof-to-shell joint details and the participating compression area shall be in accordance with Fig. 21. The area A shall have a minimum width of $0.015R$. Its centroid shall not be further than 1.5 times the average thickness of the two intersecting members from the plane of the roof-to-shell intersection. All joints transverse to compressive loading in members contributing to A shall be butt welded with complete penetration and fusion.

3.8.5 Anchorage. The design of the anchorage and its attachment to the tank shall satisfy the following requirements:

(a) the calculated stresses for anchor bolts shall satisfy all of the conditions listed in Table 23;

(b) the nominal diameter of anchor bolts shall not be less than 1¼ in.;

(c) the anchor bolts shall be spaced as necessary to fully develop the foundation elements that are intended to resist uplift; this spacing shall not exceed 10 ft; there shall be a minimum of 8 bolts;

Copyright ASME International
Provided by IHS under license with ASME
No reproduction or networking permitted without license from IHS
Not for Resale

(d) anchor bolts shall be uniformly tightened while the tank is filled with test water but before any pressure is applied in the gas space; measures shall be taken to prevent the nuts from loosening in service;

(e) the attachment of the anchor bolts to the shell shall be through stiffened chair-type assemblies or anchor rings and shall take into account localized stresses in the shell;

(f) the embedment of anchor bolts shall be adequate to develop the strength of the bolt in tension;

(g) consideration shall be given to the potential for galvanic and other types of corrosion (see Appendix D); threads shall not extend down into the concrete or grout; and

(h) anchor straps may be used in lieu of anchor bolts (see para. 1.1.5).

3.8.6 Counterbalancing Weight. The counterbalancing weight, such as a concrete ringwall, shall be designed so that the resistance to uplift at the bottom of the shell is at least the greatest of the following:

(a) The uplift produced by 1.5 times the internal design pressure applied to the empty tank plus the uplift from the design wind overturning moment. The weight of any metal provided for corrosion allowance shall not be considered as part of the counterbalancing weight.

(b) The uplift produced by 1.25 times the test pressure applied to the empty tank.

(c) The uplift produced by 2.0 times the internal design pressure applied to the empty tank. The weight of any metal provided for corrosion allowance shall not be considered as part of the counterbalancing weight.

When a footing is included in the ringwall design, the effective weight of the soil may be included.

3.9 Wind Load on Class 1 and Class 2 Tanks

3.9.1 General. Class 1 and Class 2 tanks (see para. 1.2) may not be stable without anchoring, whether full of liquid or empty, when subjected to the design wind overturning moment. These tanks shall meet the requirements of paras. 3.9.2 through 3.9.4.

3.9.2 Wind Overturning Moment. The design wind overturning moment shall be based on wind loads or pressures as specified by the purchaser or shall be determined in accordance with codes and/or jurisdictional regulations specified by the purchaser.

3.9.3 Stability Criterion. Anchoring to resist the wind overturning moment shall be provided when the following inequality is satisfied:

$$M > \tfrac{2}{3}\left(\frac{WD}{2}\right)$$

where

D = tank diameter, ft
M = overturning moment from wind pressure, ft-lb
W = shell weight available to resist uplift, less any corrosion allowance, plus dead weight supported by the shell, minus simultaneous uplift from operating conditions, such as internal pressure on the roof, lb

3.9.4 Anchors. When anchors are required, the design tension load per anchor shall be calculated as follows: (99)

$$t_B = \frac{4M}{dN} - \frac{W}{N}$$

where

M_1W = see para. 3.9.3
N = number of anchors
d = diameter of anchor circle, ft
t_B = design tension load per anchor, lb

There shall be a minimum of eight anchor points and the maximum permissible spacing for anchors shall be 10 ft. The allowable tensile stress for anchor bolts shall be in accordance with Table 23, and the minimum recommended bolt size is $1\frac{1}{4}$ in. diameter.

Copyright ASME International
Provided by IHS under license with ASME
No reproduction or networking permitted without license from IHS
Not for Resale

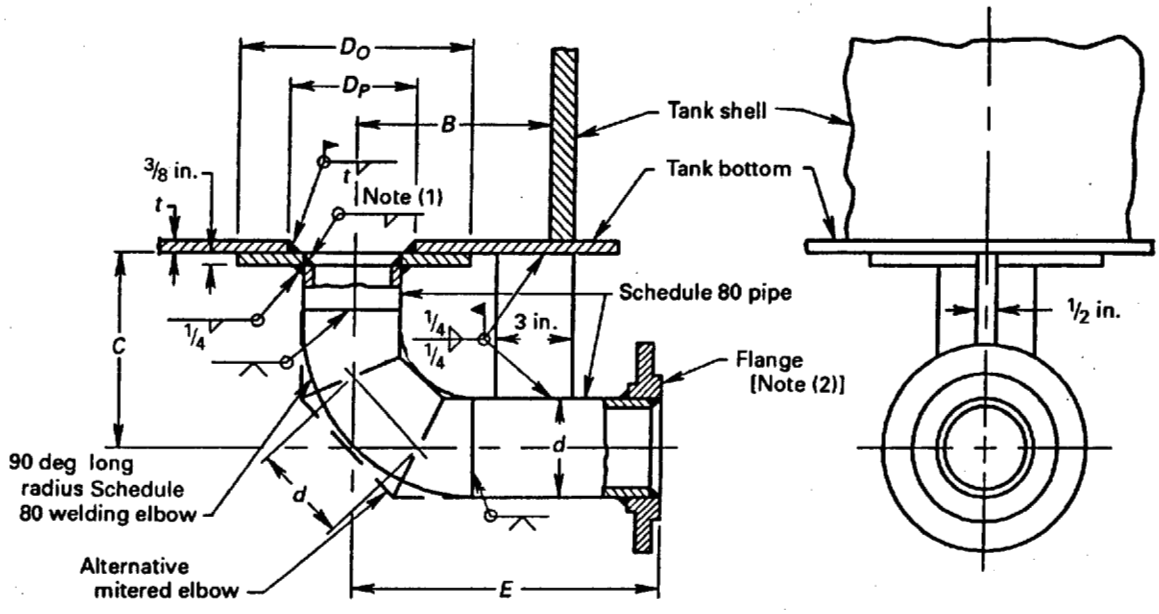

NOTES :
(1) Fillet weld shall be the smaller of pipe wall thickness or 3/8 in.
(2) Flange dimensions shall conform to ASME B16.5.

FIG. 17 WELDED DRAWOFF ELBOW (See Table 21)

TABLE 21 WELDED DRAWOFF ELBOW

Nominal Pipe Size [Note (1)]	Distance From Center of Elbow to Shell, *B*	Distance From Center of Outlet to Bottom, *C*	Diameter of Hole in Tank Bottom, D_P	Outside Diameter of Reinforcing Plate, D_o	Distance From Center of Elbow to Face of Outlet Flange, *E*
2	7 1/2	6	3 1/8	6 1/4	12
3	8 1/2	7	4 1/4	7 3/4	13
4	9 1/2	7 13/16	5 1/4	9 3/4	14
6	11	9 3/8	7 3/8	12 3/4	16
8	13	12 3/8	9 3/8	16 1/2	18

GENERAL NOTES:
(a) All dimensions are in inches.
(b) See Fig. 17.

NOTE:
(1) See Table 17 for wall thickness.

Copyright ASME International
Provided by IHS under license with ASME
No reproduction or networking permitted without license from IHS
Not for Resale

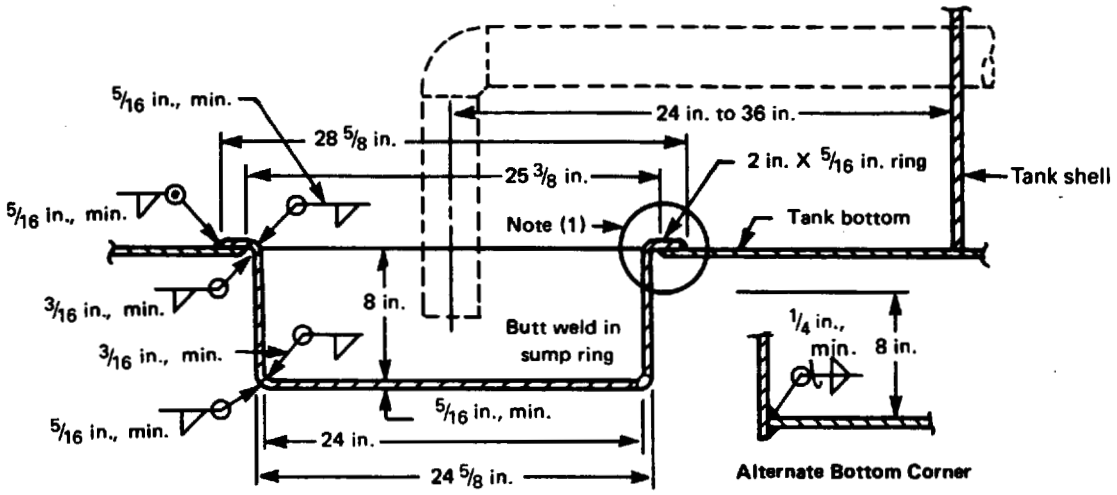

GENERAL NOTE:
Erection procedure:
(a) cut hole in bottom plate,
(b) make neat excavation to conform to shape of drawoff sump in order to support the bottom plate, and
(c) place and weld sump.

NOTE:
(1) The ring may be under the bottom if desired.

FIG. 18 DRAWOFF SUMP

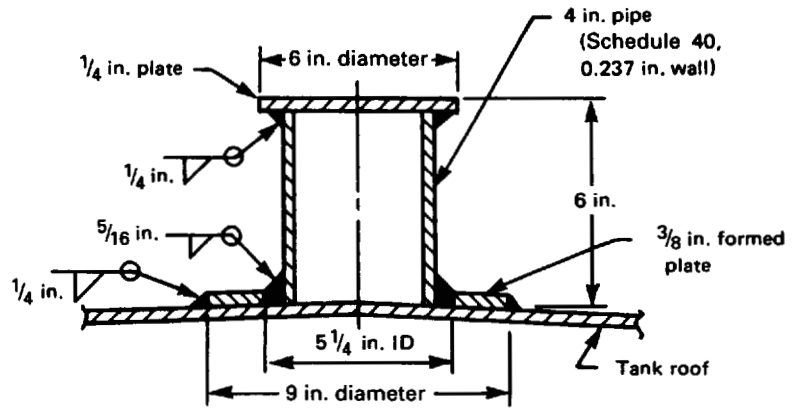

GENERAL NOTE:
Where seams or other attachments are located at the center of the tank roof, the scaffold support shall be located as near to the center as possible.

FIG. 19 SCAFFOLD CABLE SUPPORT

Copyright ASME International
Provided by IHS under license with ASME
No reproduction or networking permitted without license from IHS Not for Resale

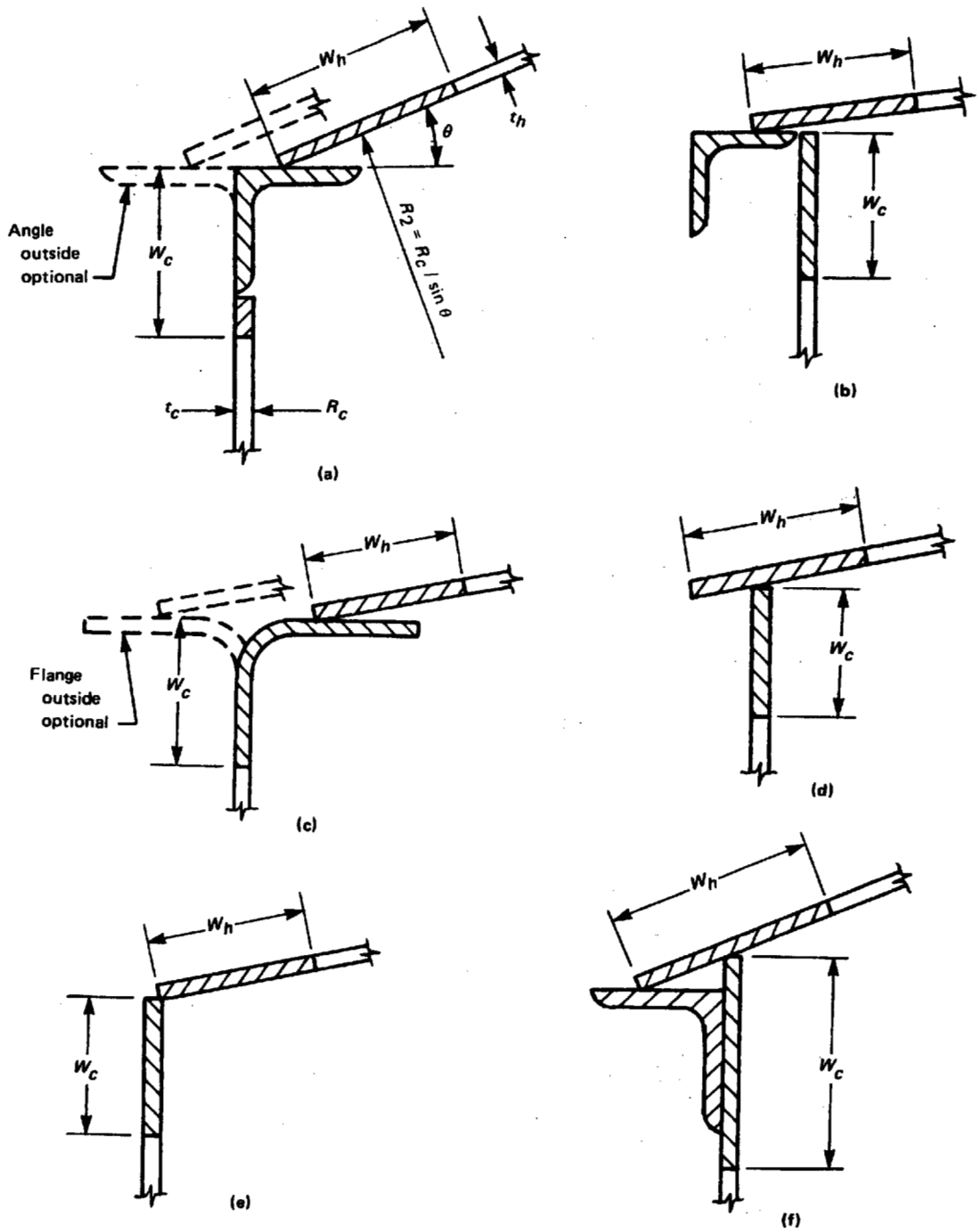

GENERAL NOTES:
(a) All dimensions are in inches.
(b) For all sketches above, $W_c = 0.6\sqrt{R_c t_c}$ and $W_h = 0.3\sqrt{R_2 t_h}$ (max. = 12 in.).

FIG. 20 PARTICIPATING COMPRESSION AREA IN ROOF-TO-SHELL JOINTS FOR CLASS 2 TANKS

Copyright ASME International
Provided by IHS under license with ASME
No reproduction or networking permitted without license from IHS Not for Resale

TABLE 22 YIELD STRENGTH VALUES FOR USE IN SECTIONS 3.7 AND 3.8 (Applies to All Products Except as Limited by the Notes)

Alloy [Note (1)]	Temper [Note (1)]	Yield Strength Values, Y, psi, at Temperatures, °F, Not Exceeding [Note (2)]: 100	150	200	250	300	350	400
1060	All	2,500	2,500	2,400	2,200	1,900	1,800	1,600
1100	All	3,500	3,500	3,500	3,400	3,200	2,800	2,400
3003	All	5,000	5,000	5,000	4,900	4,600	4,300	3,700
Alclad 3003	All	4,500	4,500	4,500	4,400	4,100	3,900	3,300
3004	All	8,500	8,500	8,500	8,500	8,500	8,000	7,400
Alclad 3004	All	8,000	8,000	8,000	8,000	8,000	7,200	6,700
5050	All	6,000	6,000	6,000	6,000	6,000	5,800	5,600
5052, 5652	All	9,500	9,500	9,500	9,500	9,500	9,500	8,400
5083 [Note (3)]	All	18,000	17,900	...	...	...	...	...
5083 [Note (4)]	All	17,000	16,900	...	...	...	...	...
5083 [Notes (5) and (6)]	All	16,000	15,900	...	...	...	...	...
5086	All	14,000	13,900	...	...	...	...	...
5154, 5254	All	11,000	11,000	...	...	...	...	...
5454	All	12,000	12,000	12,000	12,000	11,900	11,600	11,100
5456 [Notes (3) and (6)]	All	19,000	18,800	...	...	...	...	...
5456 [Note (4)]	All	18,000	17,900	...	...	...	...	...
6061, Alclad 6061	T4, T6 [Note (7)]	17,500	17,500	17,500	17,500	17,200	15,400	12,300
6063 [Note (5)]	T6	11,000	11,000	11,000	11,000	10,000	6,000	4,500

GENERAL NOTE: Linear interpolation for intermediate temperatures is permitted.

NOTES:
(1) Designations have been established in accordance with ANSI H35.1.
(2) Yield strengths shown are for welded construction and are based on the -O temper, except for 6061, Alclad 6061, and 6063.
(3) For sheet and plate (0.051 in. through 1.500 in. thick).
(4) For plate (1.501 in. through 3.000 in. thick).
(5) For extruded bars, rods, shapes, tubes, and pipe.
(6) For forgings.
(7) Thickness 0.006 in. to 0.249 in.; for thicknesses 0.250 in. and over, corresponding tempers are T451 and T651.

TABLE 23 ALLOWABLE STRESSES FOR ANCHOR BOLTS RESISTING INTERNAL PRESSURE

Case	Uplift Resulting From [Note (1)]:	Allowable Stress for A36 Anchor Bolts, psi [Notes (2) and (3)]
1	Internal design pressure	15,000
2	Internal design pressure plus wind or seismic	20,000
3	Test pressure	20,000

NOTES:
(1) Holddown of the bottom due to liquid weight shall not be considered when determining anchor bolt loads.
(2) For other materials, the allowable stresses are to be determined by multiplying the above allowable by the ratio of the yield strength of the material being used to 36,000 psi.
(3) Use root area of bolt threads.

Copyright ASME International
Provided by IHS under license with ASME
No reproduction or networking permitted without license from IHS Not for Resale

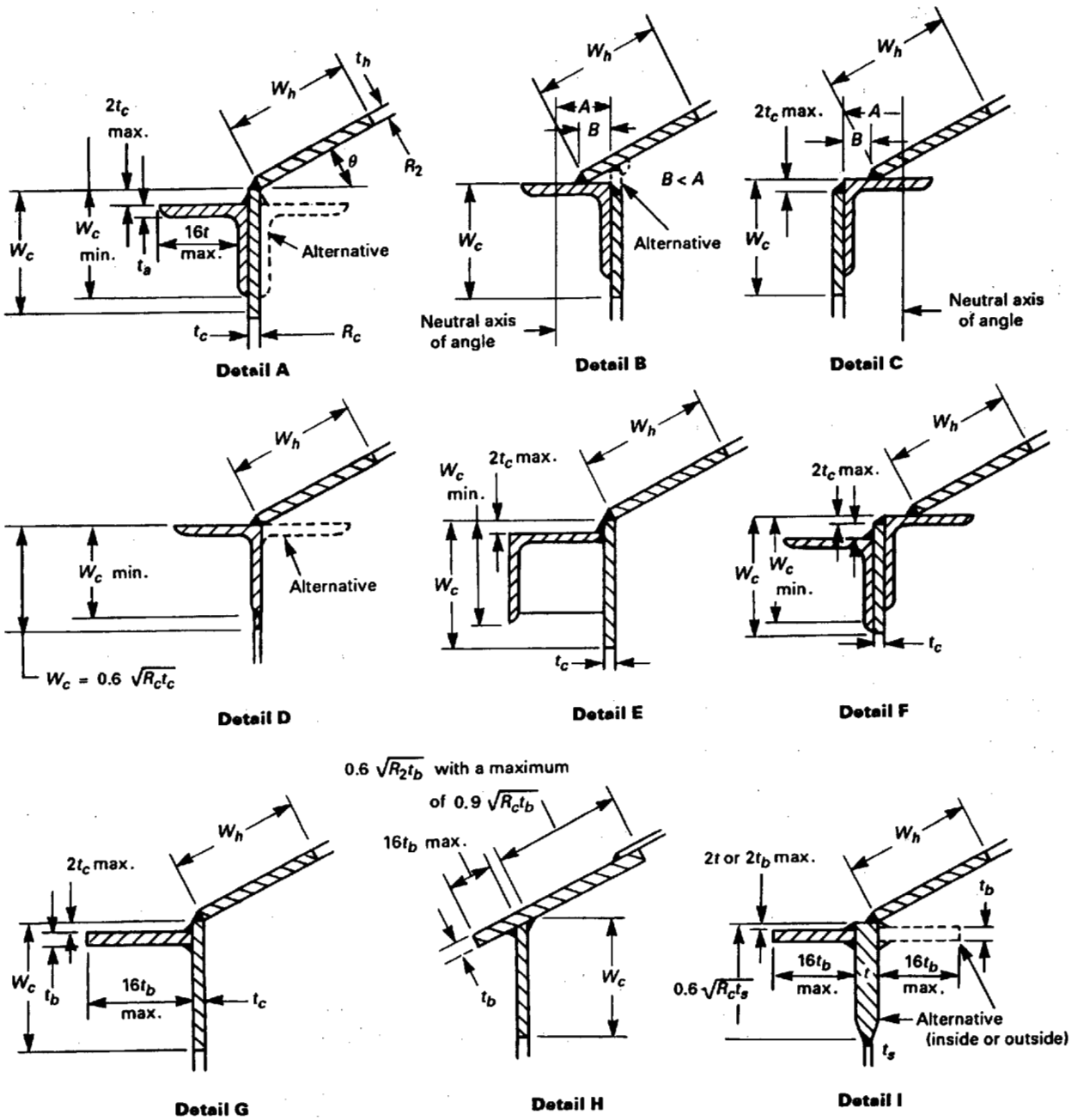

GENERAL NOTE: All dimensions are in inches.

FIG. 21 PERMISSIBLE DETAILS AND PARTICIPATING COMPRESSION REGION FOR CLASS 3 TANKS

Copyright ASME International
Provided by IHS under license with ASME
No reproduction or networking permitted without license from IHS
Not for Resale

Section 4
Fabrication

4.1 Fabricating

The fabrication of the tanks shall be performed in accordance with this Standard.

4.2 Straightening and Forming

When material requires straightening, the work shall be done by pressing or other noninjurious method prior to any layout or shaping. Aluminum alloys may be heated for forming, but the holding time at temperature should not exceed the values given in Table 24.

4.3 Finish of Plate Edges

Surfaces and edges to be welded shall be smooth, uniform, and free from fins, tears, cracks, and other discontinuities that would adversely affect the quality or strength of the weld. Cutting and edge preparation may be done by sawing, machining, shearing, chipping, or plasma arc processes. A minimum of 1/8 in. shall be mechanically removed from plasma arc cut surfaces if the material is a heat-treatable alloy. Dross and any heavy oxide shall be removed.

4.4 Shaping of Shell Plates

Shell plates shall be shaped to suit the curvature of the tank and the erection procedure according to the following schedule:

Plate Thickness, in.	Tank Diameter, ft
3/16 to 3/8, exclusive	30 and less
3/8 to 1/2, exclusive	50 and less
1/2 to 5/8, exclusive	90 and less
5/8 and over	All

Tapered shell plates shall be shaped as necessary to conform to the circumferential curvature of the shell.

4.5 Marking

All tank parts that are cut to size before shipment shall be marked as shown on the fabricator's drawing. See para. D3.3 of Appendix D for compatible markers or marking materials.

4.6 Shipping

Plates and tank material shall be loaded on the carrier in such a manner as to ensure delivery without damage. Bolts, nuts, railing connections, nipples, and other small parts shall be put in containers suitable for shipment to prevent loss or damage.

Copyright ASME International
Provided by IHS under license with ASME
No reproduction or networking permitted without license from IHS

Not for Resale

TABLE 24 HEATING TIME AT TEMPERATURE PREPARATORY TO FORMING ALUMINUM ALLOYS
Maximum Time at Temperature

Holding Temperature, °F	Alloys 6061-T4, 6061-T6, Alclad 6061-T4, Alclad 6061-T6, and 6063-T6 [Note (1)]	Alloys 1060, 1100, 3003, 3004, Alclad 3003, Alclad 3004, 5050, 5052, 5454, and 5652 [Note (2)]	Alloys 5083, 5086, 5154, 5254, and 5456 [Note (2)]
800	Not recommended	50 hr	50 hr
500	Not recommended	50 hr	50 hr
450	5 min	50 hr	50 hr
425	15 min	50 hr	50 hr
400	30 min	50 hr	50 hr
375	1–2 hr	50 hr	Not recommended
350	8–10 hr	50 hr	Not recommended
325	50 hr	50 hr	Not recommended

GENERAL NOTE:

(a) Equal formability may be obtained with shorter periods of heating. Time at temperature for clad alloys should be kept at a minimum to prevent diffusion of the cladding into the core alloy. Heating should be as rapid as possible, particularly for temperatures 400°F and above. Excessive time to approach the desired temperatures can have deleterious effects similar to those resulting from excess time at temperature.

NOTES:

(1) Losses in strength for the alloys in the T6 temper will not exceed about 5% when heated at the temperature and for the periods shown. Strength of the T4 temper alloys will increase.

(2) Alloys will be annealed at 650°F and above.

Copyright ASME International
Provided by IHS under license with ASME
No reproduction or networking permitted without license from IHS
Not for Resale

Section 5
Erection

5.1 General

5.1.1 Foreign Materials. Neither paint nor foreign material shall be used between contacting surfaces in construction, except for composite joints such as aluminum to steel (see Appendix D) or between aluminum nuts and bolts (see para. 2.10.1).

5.1.2 Riveting and Bolting. Any riveting or bolting for structural attachments or structural work shall conform to the requirements of para. 3.6.12 and to acceptable practices of fabrication and assembly [see Appendix C, Section C8, (3) and (4)].

5.1.3 Lugs. Lugs attached by welding to the tank and needed only for purposes of erection shall be removed, and any noticeable projections of weld metal shall be chipped and/or ground from the plate. The plate shall not be gouged or torn in the process of removing the lugs.

5.2 Welding

5.2.1 General. Tanks and their structural attachments shall be welded by the gas metal arc, gas tungsten arc, or plasma arc welding process without using flux. The welding shall be performed manually, automatically, or semiautomatically according to procedures by welders and welding operators qualified in accordance with Section IX of the Code, and in such a manner as to ensure complete fusion with the base metal within the limits required by the applicable paragraphs and illustrations.

5.2.2 Limitations. Welding shall not be performed when the surfaces of the parts to be welded are wet from rain, snow, or ice; when rain or snow is falling on such surfaces; or during periods of high winds, unless the welder and work are properly shielded. Welding shall not be performed when the base metal temperature is less than 0°F. When the base metal temperature is within the range of 0°F to 32°F, inclusive, the base metal within 3 in. of the place where welding is to be started shall be heated to a temperature warm to the hand. If preheating is necessary, the temperature of the alloys in columns 2 and 4 of Table 24 should be limited to 250°F for a period of 30 min to avoid resultant loss of strength in weldments of alloys in column 2 or sensitizing of alloys in column 4 to possible stress corrosion cracking or exfoliation.

5.2.3 Preparation. All abutting edges to be welded shall be thoroughly cleaned before welding. Chlorinated hydrocarbons should not be used in the weld vicinity because of the possibility of generating phosgene-type gas. Stainless wire brushing may be used between passes, if necessary, to ensure a clean surface for welding.

5.2.4 Undercutting. The edges of all welds shall merge smoothly with the surface of the plate without a sharp angle. A reduction in thickness due to the welding process of the base metal for vertical and horizontal butt joints shall not exceed $1/32$ in. and shall not encroach on the required section thickness.

5.2.5 Reinforcing Crown. The weld metal on both sides of all butt joints, except the offset faces of horizontal joints, shall be built up in the form of a reinforcement so that all of the finished face in the area of fusion shall extend above the surface of the adjoining plates not more than the following values:

Plate Thickness, in.	Maximum Height of Reinforcement Above Plate Surface, in.
If $T \le 3/8$	$3/32$
If $3/4 \ge T > 3/8$	$1/8$
If $T > 3/4$	$3/16$

5.2.6 Lap Joints. At all lap joints, the plates shall be held in close contact during the welding operation.

5.2.7 Tack Welds. Tack welds need not be removed provided they are sound and the cover beads are thoroughly fused into the tack welds.

5.2.8 Bottom Plates. The bottom plates, after being laid out and tacked, shall be welded in a sequence that will result in a minimum amount of distortion.

Copyright ASME International
Provided by IHS under license with ASME
No reproduction or networking permitted without license from IHS
Not for Resale

5.2.9 Shell-to-Bottom Welds. Shell plates may be aligned by aluminum clips attached to the bottom plates, and the shell tack welded to the bottom, before continuous welding is started between the bottom edge of the shell plate and the bottom plates.

5.2.10 Shell Plates. Plates to be joined by butt welding shall be matched accurately and retained in position during the welding operation. Misalignment in completed vertical joints shall not exceed 10% of the plate thickness or $^{1}/_{16}$ in., whichever is greater.

5.2.11 Horizontal Butt Joints. In completed horizontal butt joints, the upper plate shall not project beyond the face of the lower plate at any point by more than 20% of the thickness of the upper plate with a maximum of $^{1}/_{8}$ in., except that a projection of $^{1}/_{16}$ in. is permissible for upper plates less than $^{5}/_{16}$ in. thick.

5.2.12 Vertical Butt Joints. The reverse side of double-welded vertical butt joints shall be prepared thoroughly, prior to the application of the first bead to this side, in a manner that will leave the exposed surface satisfactory for the fusion of the weld metal to be added.

5.2.13 Roofs. This Standard does not include special stipulations on erection of the roof. The required structural supports shall conform to accepted structural practice [see Appendix C, Section C8 (3) and (4)], and rafters and the like shall be reasonably true to line and surface.

5.2.14 Plate Flanges. Plate flanges shall be double fillet welded, as a minimum (see Fig. 7).

Copyright ASME International
Provided by IHS under license with ASME
No reproduction or networking permitted without license from IHS Not for Resale

Section 6
Inspection, Examination, and Testing

6.1 Inspection

6.1.1 Inspection by Manufacturer or Erector. Materials, fabrication, and erection shall be inspected as necessary to ensure compliance with this Standard. A certificate shall be obtained from the material supplier or producer stating that the material conforms to the applicable specifications in Section 2. A copy of this certificate shall be furnished to the purchaser on request.

6.1.2 Inspection by Purchaser. The purchaser shall be given ample notice as to when fabrication and erection will start so that the purchaser's Inspector may have the opportunity to inspect the material and workmanship. The purchaser's Inspector shall be permitted access to those parts of the fabricator's plant and the erection site concerned with the subject tank. Waiving of inspection by the purchaser does not relieve the manufacturer or erector from compliance with this Standard.

6.2 Examination of Welds

6.2.1 Butt Welds. Where joint efficiencies other than 0.70 are used for design in the equations of para. 3.3.3(a), radiographic examination for quality of welds shall be in accordance with para. 6.3. Where visual examination indicates unsatisfactory welds between shell plates, acceptance or rejection shall be based on interpretation of radiographs representing the areas in question.

6.2.2 Fillet Welds. Examination of fillet welds shall be made by visual examination and as indicated in para. 6.4. Where visual inspection by the purchaser's Inspector indicates unsatisfactory welds, acceptance or rejection shall be based on sectioning such areas by chipping with a mechanical roundnose chipping tool.

6.2.3 Costs. All costs for making radiographs and any necessary repairs in excess of the number specified in this Section is a contractual matter between the manufacturer and purchaser.

6.3 Radiographic Methods

6.3.1 Applications

(a) Vertical shell butt welds for which a joint efficiency of 1.0 is used in para. 3.3.3(a) shall be examined for their entire length.

(b) Vertical shell butt welds for which a joint efficiency of 0.85 is used in para. 3.3.3(a) shall be spot examined in accordance with para. 6.3.3.

(c) Horizontal shell butt welds shall be spot radiographed in accordance with para. 6.3.3 when (a) or (b) above apply.

6.3.2 Preparation for Radiographic Examination. Normally, no preparation of the weld bead should be necessary for radiographic examination if the weld bead is of acceptable appearance. However, if during the interpretation of the radiographs, areas of questionable quality must be further investigated by radiography, weld ripples or weld surface irregularities should be removed in such a manner that the weld surface merges smoothly into the plate surface and into the adjacent weld surface. When such surface treatment is required, reduction of reinforcement thickness should be held to a minimum.

6.3.3 Number and Location of Radiographs. Spot radiographs shall be taken as specified in (a) through (g) below.

(a) Vertical Joints. One spot radiograph shall be taken from the first 10 ft of completed vertical joint of each welding process and thickness welded by each welder or welding operator. Thereafter, without regard to the number of welders or welding operators working thereon, one spot radiograph shall be taken from each additional 100 ft (approximately) and any remaining major fraction thereof of vertical joint of the same welding process and thickness. At least 25% of the selected spots shall be at junctions of vertical and horizontal joints, with a minimum of two such intersections per tank.

(b) Horizontal Joints. One spot radiograph shall be taken in the first 10 ft of completed horizontal butt joint of the same type and thickness (based on the

Copyright ASME International
Provided by IHS under license with ASME
No reproduction or networking permitted without license from IHS
Not for Resale

thickness of the thinner plate at the joint) and welding process, without regard to the number of welders or welding operators. Thereafter, one radiograph shall be taken in each additional 200 ft (approximately), and any remaining major fraction of horizontal joint of the same type and thickness. For this paragraph, plates shall be considered of the same thickness when the difference in the specified thickness does not exceed 0.03 in.

(c) Tapered Plate Joints. Completed vertical and horizontal joints between tapered plates shall have one spot radiograph taken from the first 10 ft of joint of each process welded by each welder or welding operator. Thereafter, without regard to the number of welders or welding operators working thereon, one spot radiograph shall be taken from each additional 100 ft (approximately) and any remaining major fraction thereof of the same process. At least 25% of the selected spots shall be at junctions, if any, of vertical and horizontal joints, with a minimum of two such intersections per tank.

(d) Multiple Tanks. When two or more tanks are erected in the same location for the same purchaser, either concurrently or consecutively, the number of radiographs to be taken may be based on the aggregate footage of welds of the same type and thickness in the group of tanks, rather than on the footage in each individual tank.

(e) Dual-Welded Joints. It is recognized that the same welder or welding operator may not weld both sides of the same butt joint. It is therefore permissible to inspect the work of two welders or welding operators with one spot radiograph if they weld opposite sides of the same butt joint. When a one-spot radiograph of this type is rejected, it shall be determined by further spot radiographs whether one or both welders or welding operators was/were at fault.

(f) Welders. Insofar as possible, an equal number of radiographs shall be taken from the work of each welder or welding operator.

(g) Spot Locations. The location for taking spot radiographs may be determined by the purchaser's Inspector. Radiographs shall be taken as the work progresses and as soon as practicable after the joints have been welded.

6.3.4 Radiographic Film. Each radiograph shall clearly show a minimum of 3 in. of weld length. The film shall be centered on the weld and shall be of sufficient width to permit adequate space for the location of identification markers and thickness gage or penetrameter.

6.3.5 Radiographic Technique. Except as modified in this Section, the radiographic examination method employed shall be in accordance with Article 2 of Section V, Nondestructive Examination, of the Code.

(a) Radiographers performing radiograph examination under this Section shall be certified by the manufacturer as meeting requirements of certification as generally outlined in ASNT Standard SNT-TC-1A, including supplements and appendices as applicable for the techniques and methods used.

(b) The requirements of T-285 of Article 2 of Section V of the Code are to be used only as a guide. Final acceptance of radiographs shall be based on the ability to see the prescribed penetrameter image and the specified hole.

(c) The finished surface of the weld may be flush with the plate or may have a reasonably uniform crown not to exceed the values given in para. 5.2.5.

6.3.6 Submission of Radiographs. Prior to any repairs of welds, the radiographs shall be submitted to the Inspector with such information as he may request regarding the radiographic technique used.

6.3.7 Radiograph Acceptance Standards. The acceptability of welds examined by radiography shall be judged in accordance with the requirements for spot radiography in Section VIII, Division 1, of the Boiler and Pressure Vessel Code. The term "slag" is not applicable.

6.3.8 Determination of Limits of Defective Welding for Spot Radiography. When a section of weld is shown by a radiograph to be unacceptable under the provisions of para. 6.3.7, or the limits of the deficient welding are not defined by such radiograph, two adjacent spots shall be examined by radiography. However, if the original radiograph shows at least 3 in. of acceptable weld between the defect and any one edge of the film, an additional radiograph need not be taken of the weld on that side of the defect.

If the weld at either of the two adjacent sections fails to comply with the requirements of para. 6.3.7, additional nearby spots shall be examined until the limits of unacceptable welding are determined, or the erector may replace all the welding performed by the welder or welding operator on that joint. If the welding is replaced, the Inspector shall have the option of requiring that one radiograph be taken at any selected location on any other joint on which the same welder (or operator) has welded. If any of such additional spots fail to comply with the requirements of para. 6.3.7,

Copyright ASME International
Provided by IHS under license with ASME
No reproduction or networking permitted without license from IHS
Not for Resale

STD·ASME B96·1-ENGL 1999 ■ 0759670 0616349 379 ■

the limits of unacceptable welding shall be determined as specified for the initial section.

6.3.9 Repair of Defective Welds. Defects in welds shall be repaired by chipping or machining out such defects from one or both sides of the joint, as required, and rewelding. Only sufficient cutting out of defective joints is required as is necessary to correct the defect.

6.3.10 Inspection of Repaired Welds. All repair welds in joints shall be checked by repeating the original test procedure and shall conform to the requirements of para. 6.3.7.

6.3.11 Record of Radiographic Examination. The manufacturer shall make a record of all films, with their identification marks and with the initials or identifying numbers of the welders or welding operators, on a developed shell plate diagram.

6.4 Testing

6.4.1 General. The tank bottom, roof, and shell shall be tested in accordance with the following paragraphs. The purchaser shall be notified in advance of testing so the purchaser's Inspector can be present. Leaks in welded joints shall be repaired by chipping and rewelding the defective area. The area to be repaired shall be dry before rewelding. Appropriate safety precautions should be observed during the testing or repairs. Consideration should be given to the quality of water used for testing because of possible deleterious effects on the aluminum. Water should be removed from the tank as soon as possible after the test.

6.4.2 Bottom. Upon completion of the welding of the tank bottom, bottom joints shall be examined by the vacuum box method using solution film (see para. 6.4.6).

6.4.3 Class 1 Tanks. Upon completion of the entire tank, and before any external piping has been connected to the tank, the tank shall be tested by one of the methods given in (a) and (b) below.

(99) *(a)* If water is available for testing and the tank has been designed for a specific gravity of 1.0 or greater, the tank shall be filled with water and inspected frequently during the filling operation. For tanks with tight roofs, the filling height shall be 2 in. above the top leg of the top angle. For open-top tanks, the filling height shall be the top of the top angle or the bottom of any overflow that limits the filling height. If the tank has been designed for a specific gravity of less than 1.0, the tank shall be filled with water to a level that is equivalent to the design load at the bottom of the tank. Shell and roof seams above this level shall be vacuum box tested (see para. 6.4.6).

(b) If a sufficient quantity of water for testing the tank is not available or there are other reasons why water should not be used, the test may be made, if agreed to by the purchaser, by brushing a leak-detecting solution (in a nonfreezing solution, if necessary) on the joints and then testing using the vacuum box method (see para. 6.4.6).

6.4.4 Class 2 Tanks. Upon completion of the entire tank, and before any external piping has been connected to the tank, the tank shall be tested as follows:

(a) The tank shall be filled with water and inspected frequently during the filling operation. For tanks with tight roofs, the filling height shall be 2 in. above the top leg of the angle. If the tank has been designed for a specific gravity of less than 1.0, the tank shall be filled with water to a level that is equivalent to the design load at the bottom of the tank.

(b) The design internal air pressure shall then be applied to the enclosed space above the water level and held for 15 min. Thereafter, the air pressure shall be reduced to one-half the design pressure, and all welded joints above the liquid level shall be checked for leaks by means of a soap film, linseed oil, or another suitable material. Tank vents shall be tested during or after this test.

6.4.5 Class 3 Tanks. Upon completion of the entire tank, and before any external piping has been connected to the tank, the tank shall be tested as follows:

(a) The tank shall be filled with water and inspected frequently during the filling operation. For tanks with tight roofs, the filling height shall be 2 in. above the top leg of the top angle. If the tank has been designed for a specific gravity of less than 1.0, the tank shall be filled with water to a level that is equivalent to the design load at the bottom of the tank.

(b) After the tank is filled with water, the shell and the anchorage shall be visually inspected for tightness. Air pressure of 1.25 times the design pressure shall be applied to the enclosed space above the water level and held for 15 min. The air pressure shall then be reduced to the design pressure, and the tank shall be checked for tightness. In addition, all seams above the water level shall be tested using a soap film or another material suitable for the detection of leaks. After the test water has been emptied from the tank (and the

Copyright ASME International
Provided by IHS under license with ASME
No reproduction or networking permitted without license from IHS
Not for Resale

tank is at atmospheric pressure), the anchorage shall be checked for tightness. The design air pressure shall then be applied to the tank for a final check of the anchorage.

6.4.6 Vacuum Box Testing. Vacuum testing may be conveniently performed by means of a leak-detecting solution and a metal testing box approximately 6 in. wide by 30 in. long with a glass window in the top. The open bottom is sealed against the tank surface by a sponge rubber gasket. Suitable connections, valves, and gages should be provided. The vacuum can be obtained by any convenient method, such as by connecting to a gasoline or diesel motor intake manifold or to an air ejector or vacuum pump. As each 30 in. of the weld is brushed with the testing solution, the test box is placed over the coated section and a vacuum of at least 3 psig is applied. Any bubbles or foam resulting from porosity in the weld can be observed through the glass window.

Copyright ASME International
Provided by IHS under license with ASME
No reproduction or networking permitted without license from IHS
Not for Resale

Section 7
Welding Procedures and Welder Qualifications

7.1 General

7.1.1 Requirements. The requirements for welding procedure, welder, and welding operator qualifications in this Section pertain to the welding processes permitted under para. 5.2.1. The requirements of Section IX of the Code apply except as augmented by this Section.

(99) **7.1.2 Definitions.** The definitions below shall apply to welding and welders.

machine welding: welding with equipment that performs the welding operation under the constant observation and control of a welding operator.

manual welding: welding wherein the entire welding operation is performed and controlled by hand.

semiautomatic welding: welding with equipment that controls only the filler metal feed. The advance of the welding is manually controlled.

welder: one who is qualified to perform a manual or semiautomatic welding operation.

welding operator: one who operates machine or automatic welding equipment.

7.2 Welding Procedure Qualification Tests

The fabricator shall have conducted tests of his procedures to demonstrate their suitability in making welds that conform to the specified requirements. Each welding procedure shall be qualified in accordance with the applicable rules in Section IX.

7.3 Welder Qualification

7.3.1 Welders. Tests shall be conducted for all welders assigned to manual or semiautomatic welding and all welding operators assigned to machine welding to demonstrate their ability to make acceptable welds. Tests conducted by one fabricator shall not qualify a welder or welding operator to do the work for another fabricator.

7.3.2 Tests. The tests shall be as prescribed in Section IX.

7.3.3 Records. The records of such tests shall be as given in (a) and (b) below.

(a) Each welder or welding operator shall be assigned an identifying number, letter, or symbol by the fabricator. Except for all roof seams and all flange-to-neck joints, this identifying mark shall be stamped, either by hand or machine, on all tanks adjacent to, and at intervals of not more than 3 ft, along the welds made by the welder or welding operator, or the fabricator may keep a record of welders employed on each joint and omit the stamping. If such a record is kept, it shall be available to the Inspector.

(b) The fabricator shall maintain a record of the welders employed by him showing the identifying mark assigned to each and the dates and results of tests. These records shall be certified by the fabricator and shall be accessible to the Inspector.

Copyright ASME International
Provided by IHS under license with ASME
No reproduction or networking permitted without license from IHS
Not for Resale

Section 8
Marking

8.1. Nameplate

Tanks made in accordance with this Standard shall be identified by a nameplate bearing both the fabricator's and erector's names and other information as required, as shown in Fig. 22. The use of the monogram ASME B96.1 on the tank nameplate is a representation that the tank has been constructed in complete accordance with the materials and requirements set forth in this Standard, including any amendments or modifications that may be adopted prior to the application of the monogram to the tank. The use of the monogram on a tank that does not comply with the stated materials and requirements of this Standard is prohibited.

8.2 Attachment to Tank

The nameplate shall be attached to the tank shell adjacent to a manhole or to a manhole reinforcing plate immediately above the manhole. A nameplate attached directly to the shell plate or reinforcing plate shall be fastened by continuous welding or brazing all around the plate, or the nameplate may be riveted or otherwise permanently attached to an auxiliary plate that shall be attached to the tank shell plate or reinforcing plate by continuous welding.

8.3 Fabricator and Erector

When a tank is fabricated and erected by a single organization, the name shall appear on the nameplate both as fabricator and erector. When a tank is fabricated by one organization and erected by another, the names of both shall appear on the nameplate or separate nameplates shall be applied by each.

8.4 Responsibility

Unless otherwise agreed upon, when a tank is fabricated by one organization and erected by another, the erector shall be considered as having the primary responsibility.

Previous page is blank

Copyright ASME International
Provided by IHS under license with ASME
No reproduction or networking permitted without license from IHS
Not for Resale

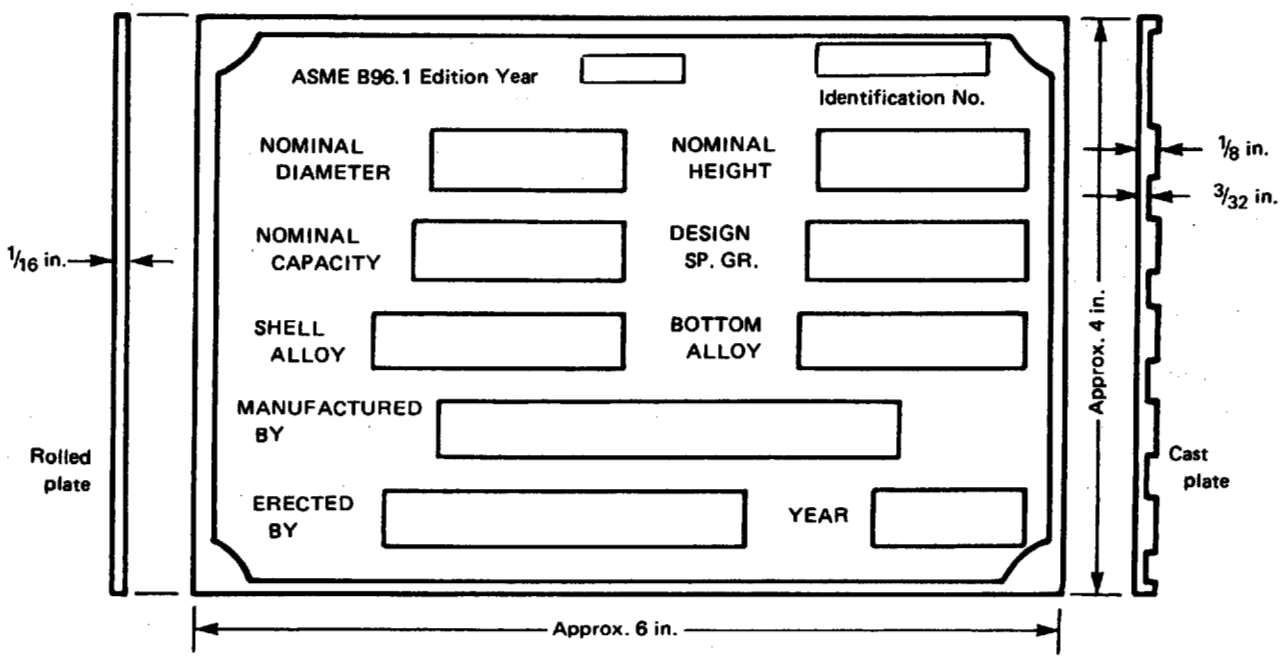

GENERAL NOTE:
On request by the purchaser or at the discretion of the manufacturer, additional pertinent information may be shown on the nameplate and the size of the nameplate may be increased proportionately.

FIG. 22 NAMEPLATE FOR IDENTIFYING TANKS

Copyright ASME International
Provided by IHS under license with ASME
No reproduction or networking permitted without license from IHS
Not for Resale

Section 9
Shop-Assembled Storage Tanks

9.1 General

This Section provides design and fabrication specifications for vertical storage tanks of such a size as to permit complete shop assembly and delivery to the installation site in one piece. Storage tanks designed on this basis are not to exceed 20 ft in diameter.

In the design and fabrication of shop-assembled storage tanks, the use of the specifications set forth in this Section shall be predicated on mutual agreement between the purchaser and the fabricator.

9.2 Materials

Materials shall comply with Section 2.

9.3 Design

9.3.1 Joint Design. The requirements of para. 3.1 shall apply, except that lap-welded joints in bottoms are not permissible.

9.3.2 Bottom Design

(a) All bottom plates shall have a minimum nominal thickness of $\frac{1}{4}$ in.

(b) Bottoms shall be built in a minimum number of pieces; wherever feasible they shall be constructed in one piece.

(c) Bottoms shall be flat. The outer edge may project at least 1 in. beyond the outer edge of the weld attaching the bottom to the shell plate, or the outer edge may be flanged with the inside corner radius not less than three times the bottom thickness and the straight flange not less than $\frac{3}{4}$ in.

(d) Joints in bottom plates shall be butt welds having complete penetration and complete fusion.

(e) For flat bottoms, the attachment between the bottom edges of the lowest course shell plate and the bottom plate shall be a continuous fillet weld laid on each side of the shell plate. Each fillet weld shall be sized in accordance with the specifications given in Table 2. Flanged bottoms shall be attached to the shell by butt welds having complete penetration and complete fusion.

9.3.3 Shell Design. Shell plates shall be designed in accordance with the requirements given in para. 3.3. All shell joints shall be butt welds having complete penetration and complete fusion.

9.3.4 Wind Girder Design for Open-Top Tanks. Open-top tanks shall be provided with wind girders as specified in para. 3.4.

9.3.5 Roof Design

(a) Roofs for tanks constructed in accordance with this Section shall be of the self-supporting type. They shall conform in configuration to one of the following shapes:

(1) Conical. Self-supporting cone roofs shall be designed as specified in para. 3.5.4, except that they may be provided with a flange that will permit butt welded attachment to the shell. When a flange is provided, the top angle is not required. Flanges shall be formed with a minimum inside corner radius of three times the roof thickness or $\frac{3}{4}$ in., whichever is larger, and a straight flange of $\frac{3}{4}$ in. minimum.

(2) Dome and Umbrella. Self-supporting dome and umbrella roofs shall be designed as specified in para. 3.5.5, except that they may be flanged as provided for conical roofs, in which case the top angle may be omitted. For domed roofs that have been flanged, the radius of curvature shall not be limited to the maximum requirements given in para. 3.5.5; instead, they shall be limited by minimum depth, including crown and knuckle depth, as follows:

Diameter, ft	Depth, in.
Up to and including 6	2
Over 6, up to and including 8	$3\frac{1}{2}$
Over 8, up to and including 10	$5\frac{1}{2}$
Over 10, up to and including 12	8
Over 12, up to and including 14	11
Over 14, up to and including 16	15
Over 16, up to and including 20	20

(b) Top angles, when required, shall be joined in accordance with paras. 3.1.4(b) and (h).

Copyright ASME International
Provided by IHS under license with ASME
No reproduction or networking permitted without license from IHS
Not for Resale

9.3.6 Tank Connections and Appurtenances. Manholes, nozzles, and other connections shall be constructed and attached as indicated in para. 3.6.

NOTE: As this Section pertains only to relatively small tanks constructed entirely in the shop, it is unlikely that reinforcing pads will be required for manholes and nozzles in the tank shell. The requirements for reinforcement should be checked in compliance with the procedure given in para. 3.3.5.

The roofs of tanks constructed in accordance with this Section will be inherently strong due to the limitations in diameter inflicted by shipping clearances. Thus, reinforcement of roof manholes and nozzles shall not be required unless specifically requested by the purchaser or unless roof loads exceed 25 lb/ft^2, in which case the amount and type of reinforcement shall be as agreed upon between the purchaser and the fabricator.

9.3.7 Lifting Lugs

(a) Lugs or clips for use in loading, unloading, and placing on foundations shall be provided on all tanks constructed in accordance with this Section.

(b) There shall be a minimum of two lugs on each tank, the location of which shall be as agreed upon between the purchaser and the manufacturer. Preferably, they should be located at the top of the tank, 180 deg apart.

(c) Lugs and attachment welds shall be designed such that, regardless of the quantity used, each lug will be capable of carrying a load, applied in any reasonable manner, of twice the empty weight of the tank, based on a safety factor of 4.

(d) Lugs capable of carrying a load as described in (c) above shall be designed and attached in a manner that will not cause damage to the vessel.

9.3.8 Anchoring. The proportions of small storage tanks often are such that overturning as a result of wind loading must be considered. In such cases, adequate provisions for anchoring shall be provided.

9.4 Fabrication

In essence, fabrication shall be accomplished in accordance with the applicable specifications given in Sections 4 and 5 of this Standard. Erection shall be interpreted as assembly, and it shall be understood that the entire vessel is fabricated in the shop and not at the field site.

9.5 Welding Procedures and Welder Qualifications

The requirements of Section 7 shall apply.

9.6 Method of Inspecting Shell Joints

The methods of inspection described in Section 6 shall apply to shop-assembled tanks.

9.7 Shop-Assembled Tanks

For shop-assembled tanks, the requirements of para. 6.4 may be replaced as specified in paras. 9.7.1, 9.7.2, and 9.7.3 if agreed to by the purchaser.

9.7.1 Testing. Tanks may be shop tested for leaks by the following method:

(a) Brace the bottom by securely attaching an external stiffening member as required to eliminate permanent deformation during the test.

(b) Close all openings with plugs or covers as needed. Bolts and gaskets of the size and type required for final installation are to be used during the test.

(c) Apply 2–3 psig internal air pressure to tank.

(d) For the detection of leaks, apply soapsuds, linseed oil, or other suitable material to all shell, bottom, roof, and attachment welds. Carefully examine for leaks.

(e) After release of air pressure, bottom stiffening shall be removed and scars repaired.

9.7.2 Repairs. All defects found in welds by leak test, sectioning method, or radiographic examination shall be repaired as specified in Section 6.

9.7.3 Inspection. The purchaser's Inspector shall have, at all times, free entry to the fabricator's shop. The fabricator shall afford the purchaser's Inspector, free of cost, reasonable facilities to assure him that the work is being performed in accordance with the requirements of this Standard.

9.8 Marking

The requirements of Section 8 shall apply.

Copyright ASME International
Provided by IHS under license with ASME
No reproduction or networking permitted without license from IHS
Not for Resale

Section 10
References

(99)

10.1 General

Throughout this Standard, references are made to various documents (standards, specifications, and codes). These documents, including the edition year acceptable under this Standard, are listed below.

ANSI H35.1-1990, Alloy and Temper Designation Systems for Aluminum

Publisher: American National Standards Institute (ANSI), 11 West 42nd Street, New York, NY 10036

ANSI/ACI 318-1989, Building Code Requirements for Reinforced Concrete and Commentary[1]

Publisher: American Concrete Institute International (ACI), P.O. Box 9094, Farmington Hills, MI 48333

ANSI/API 650-1988, Welded Steel Tanks for Oil Storage[1]

Publisher: American Petroleum Institute (API), 1220 L Street, NW, Washington, DC 20005

ANSI/ASQC Q9000-1-1994, Quality Management and Quality Assurance Standards — Guidelines for Selection and Use[1]

ANSI/ASQC Q9001-1994, Quality Systems — Model for Quality Assurance in Design, Development, Production, Installation, and Servicing[1]

ANSI/ASQC Q9002-1994, Quality Systems — Model for Quality Assurance in Production, Installation, and Servicing[1]

Publisher: American Society for Quality (ASQ), P.O. Box 3005, Milwaukee, WI 53201

ANSI/AWS A2.4-1991, Symbols for Welding, Brazing, and Nondestructive Examination[1]

ANSI/AWS A5.10-1988, Specification for Bare Aluminum and Aluminum-Alloy Welding Electrodes and Rods[1]

Publisher: American Welding Society (AWS), 550 NW Le Jeune Road, Miami, FL 33135

ASME B1.1-1989, Unified Inch Screw Threads (UN and UNR Thread Form)[1]

ANSI/ASME B1.20.1-1983, Pipe Threads, General Purpose (Inch)[1]

ASME B16.5-1996, Pipe Flanges and Flanged Fittings[1]

ASME Boiler and Pressure Vessel Code, 1998 Edition: Section VIII, Division I, Rules for Construction of Pressure Vessels; Section IX, Welding and Brazing Qualifications

Publisher: American Society of Mechanical Engineers (ASME), Three Park Avenue, New York, NY 10016; Order Department: 22 Law Drive, Box 2300, Fairfield, NJ 07007

ASTM A 153-82 (R1987), Specification for Zinc Coating (Hot-Dip) on Iron and Steel Hardware

ASTM A 193/A 193M-91a, Specification for Alloy-Steel and Stainless Steel Bolting Materials for High-Temperature Service

ASTM A 307-91, Specification for Carbon Steel Bolts and Studs, 60,000 psi Tensile Strength

ASTM A 320/A 320M-91, Specification for Alloy-Steel Bolting Materials for Low-Temperature Service

ASTM B 26/B 26M-92a, Specification for Aluminum-Alloy Sand Castings

ASTM B 108-92a, Specification for Aluminum-Alloy Permanent Mold Castings

ASTM B 209-92a, Specification for Aluminum and Aluminum-Alloy Sheet and Plate

ASTM B 210-92a, Specification for Aluminum and Aluminum-Alloy Drawn Seamless Tubes

ASTM B 211-92a, Specification for Aluminum and Aluminum-Alloy Bar, Rod, and Wire

ASTM B 221-92a, Specification for Aluminum-Alloy Extruded Bars, Rods, Wire, Profiles, and Tubes

ASTM B 241/B 241M-92a, Specification for Aluminum and Aluminum-Alloy Seamless Pipe and Seamless Extruded Tube

ASTM B 247-92a, Specification for Aluminum and Aluminum-Alloy Die Forgings, Hand Forgings, and Rolled Ring Forgings

ASTM B 308/B 308M-92a, Specification for Aluminum-Alloy Standard Structural Shapes, Rolled or Extruded

ASTM B 345-92a, Specification for Aluminum and Aluminum-Alloy Seamless Pipe and Seamless Extruded Tube for Gas and Oil Transmission and Distribution Piping System

[1] May also be obtained from the American National Standards Institute (ANSI), 11 West 42nd Street, New York, NY 10036.

Copyright ASME International
Provided by IHS under license with ASME
No reproduction or networking permitted without license from IHS
Not for Resale

STD.ASME B96.1-ENGL 1999 ■ 0759670 0616357 445 ■

ASTM B 577-84, Methods of Tension Testing Wrought and Cast Aluminum and Magnesium Products

ASTM E 139-83, Practice for Conducting Creep, Creep-Rupture, and Stress-Rupture Tests of Metallic Materials

Publisher: American Society for Testing and Materials (ASTM), 100 Barr Harbor Drive, West Conshohocken, PA 19428

MIL-R-5674E 1989, General Specification for Rivets, Structural, Aluminum Alloy, Titanium Columbium Alloy

Publisher: Department of Defense Single Stock Point for Military Specifications and Standards (DODSSP), Defense Automated Printing Service, 700 Robbins Avenue, Building 4/D, Philadelphia, PA 19111

SNT-TC-1A 1984 and Supplements, Recommended Practice for Personnel Qualification and Certification in Nondestructive Testing

Publisher: American Society for Nondestructive Testing (ASNT), 1711 Arlingate Lane, P.O. Box 28518, Columbus, OH 43228

Copyright ASME International
Provided by IHS under license with ASME
No reproduction or networking permitted without license from IHS
Not for Resale

NONMANDATORY APPENDIX A
USEFUL DESIGN DATA

A1 SCOPE

The design data in this Appendix have been included for the convenience of the user and designer and are not intended to establish a fixed series of allowable or preferred sizes or designs, nor to circumscribe limits of design or capacity.

A2 TANK CAPACITIES

The capacities of tanks in commonly used diameters and heights are shown in Tables A1 and A2.

A3 SECTION MODULI OF WIND GIRDERS

Typical wind girder sections are shown in Fig. A1, and their corresponding section moduli are given in Table A3.

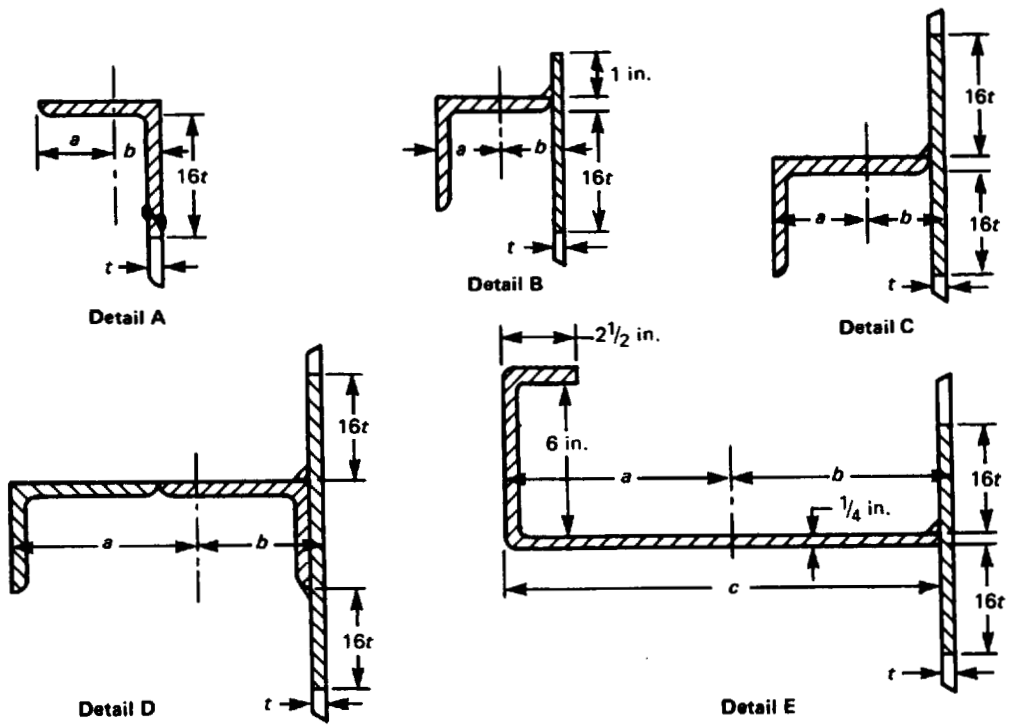

a, *b* = distances from the neutral axes
t = shell thickness in the corroded condition

GENERAL NOTE: The long legs of unequal angles are perpendicular to the shell.

FIG. A1 TYPICAL WIND GIRDER SECTIONS (See Table A3)

Copyright ASME International
Provided by IHS under license with ASME
No reproduction or networking permitted without license from IHS
Not for Resale

STD.ASME B96.1-ENGL 1999 ■ 0759670 0616359 218 ■

TABLE A1 TYPICAL NOMINAL SIZES AND CAPACITIES FOR TANKS WITH 72 in. BUTT WELDED COURSES

Nominal Tank Diameter, ft	Capacity per Foot of Height, gal	Tank Height, ft								
		12	18	24	30	36	42	48	54	60
		Number of Courses of 72 in. Plates in Shell								
		2	3	4	5	6	7	8	9	10
10	588	7,050	10,580	14,100	17,630	21,150	24,680	28,200	31,730	35,250
15	1,322	15,860	23,800	31,730	39,660	47,590	55,520	63,460	71,390	79,320
20	2,350	28,200	42,300	56,400	70,510	84,610	98,710	112,810	126,910	141,010
25	3,672	44,070	66,100	88,140	110,170	132,200	154,240	176,270	198,300	220,340
30	5,288	63,460	95,180	126,910	158,640	190,370	222,100	253,820	285,550	317,280
35	7,198	86,370	129,560	172,740	215,930	259,110	302,300	345,480	388,670	431,860
40	9,401	112,810	169,220	225,620	282,030	338,440	394,840	451,250	507,650	564,060
45	11,898	142,780	214,170	285,550	356,940	428,330	499,720	571,110	642,500	713,890
50	14,689	176,270	264,400	352,540	440,670	528,800	616,940	705,070	793,210	881,340
60	21,152	253,830	380,740	507,650	634,570	761,480	888,390	1,015,300	1,142,200	1,269,100
70	28,790	345,480	518,230	690,970	863,710	1,036,500	1,209,200	1,381,900	1,554,700	1,727,400
80	37,604	451,250	676,870	902,490	1,128,110	1,353,700	1,579,400	1,865,000	2,030,600	2,256,200
90	47,592	571,110	856,660	1,142,200	1,427,800	1,713,300	1,998,900	2,284,400	2,570,000	2,855,500
100	58,756	705,070	1,057,600	1,410,100	1,762,700	2,115,200	2,467,800	2,820,300	3,172,800	3,525,400
120	84,609	1,015,300	1,523,000	2,030,600	2,538,300	3,045,900	3,553,600	4,061,200	4,568,900	5,076,500
140	115,162	1,381,900	2,072,900	2,763,900	3,454,900	4,145,800	4,836,800	5,527,800	6,218,800	6,909,700
160	150,415	1,805,000	2,707,500	3,610,000	4,512,500	5,414,900	6,317,400	7,219,900	8,122,400	9,024,900
180	190,369	2,284,400	3,426,600	4,568,900	5,711,100	6,853,300	7,995,500	9,137,700	10,279,900	11,422,100
200	235,024	2,820,300	4,230,400	5,640,600	7,050,700	8,460,900	9,871,000	11,281,200	12,691,300	14,101,400

GENERAL NOTE:
The capacities in the table are based on the assumption that the nominal tank diameter is the inside diameter, and on the formula:

$$\text{Capacity in gallons} = \frac{3.1416}{4} \times 7.481 \times D^2H$$

$$= 5.8756\ D^2H$$

where
D = diameter, ft
H = height, ft

Copyright ASME International
Provided by IHS under license with ASME
No reproduction or networking permitted without license from IHS
Not for Resale

TABLE A2 TYPICAL NOMINAL SIZES AND CAPACITIES FOR TANKS WITH 96 in. BUTT WELDED COURSES

Nominal Tank Diameter, ft	Capacity per Foot of Height, gal	Tank Height, ft						
		16	24	32	40	48	56	64
		Number of Courses of 96 in. Plates in Shell						
		2	3	4	5	6	7	8
10	588	9,400	14,100	18,800	23,500	28,200	32,900	37,600
15	1,322	21,150	31,730	42,300	52,880	63,460	74,030	84,610
20	2,350	37,600	56,400	75,210	94,010	112,810	131,610	150,410
25	3,672	58,760	88,140	117,510	146,890	176,270	205,650	235,030
30	5,288	84,610	126,910	169,220	211,520	253,820	296,130	338,430
35	7,198	115,160	172,740	230,320	287,900	345,480	403,070	460,650
40	9,401	150,420	225,620	300,830	376,040	451,250	526,460	601,660
45	11,898	190,370	285,550	380,740	475,920	571,110	666,290	761,480
50	14,689	235,020	352,540	470,050	587,560	705,070	822,580	940,100
60	21,152	338,440	507,650	676,870	846,090	1,015,300	1,184,500	1,353,700
70	28,790	460,650	690,970	921,290	1,151,600	1,381,900	1,612,300	1,842,600
80	37,604	601,660	902,490	1,203,300	1,504,200	1,805,000	2,105,800	2,406,600
90	47,592	761,480	1,142,200	1,523,000	1,903,700	2,284,400	2,665,200	3,045,900
100	58,756	940,100	1,410,100	1,880,200	2,350,200	2,820,300	3,290,300	3,760,400
120	84,609	1,353,700	2,030,600	2,707,500	3,384,300	4,061,200	4,738,100	5,415,000
140	115,162	1,842,600	2,763,900	3,685,200	4,606,500	5,527,800	6,449,100	7,370,400
160	150,415	2,406,600	3,610,000	4,813,300	6,016,600	7,219,900	8,423,200	9,626,600
180	190,369	3,045,900	4,568,900	6,091,800	7,614,800	9,137,700	10,660,700	12,183,600
200	235,024	3,760,400	5,640,600	7,520,800	9,401,000	11,281,200	13,161,300	15,041,500

GENERAL NOTE:
The capacities in the table are based on the assumption that the nominal tank diameter is the inside diameter, and on the formula:

$$\text{Capacity in gallons} = \frac{3.1416}{4} \times 7.481 \times D^2H$$

$$= 5.8756\ D^2H$$

where
D = diameter, ft
H = height, ft

Copyright ASME International
Provided by IHS under license with ASME
No reproduction or networking permitted without license from IHS
Not for Resale

(99)

TABLE A3 SECTION MODULI FOR TYPICAL WIND GIRDER SECTIONS

Member Size, in.	Section Moduli, in.^{3}				
	Shell Thickness, in.				
	$^3/_{16}$	$^1/_4$	$^5/_{16}$	$^3/_8$	$^7/_{16}$
Detail A, Fig. A1					
$2^1/_2 \times 2^1/_2 \times ^1/_4$	0.41	0.42	...	...	...
$2^1/_2 \times 2^1/_2 \times ^5/_{16}$	0.51	0.52	...	...	...
$3 \times 3 \times ^3/_8$	0.89	0.91	...	...	...
Detail B, Fig. A1					
$2^1/_2 \times 2^1/_2 \times ^1/_4$	1.61	1.72	...	...	...
$2^1/_2 \times 2^1/_2 \times ^5/_{16}$	1.89	2.04	...	...	...
$3 \times 3 \times ^1/_4$	2.32	2.48	...	...	...
$3 \times 3 \times ^3/_8$	2.78	3.35	...	...	...
$4 \times 4 \times ^1/_4$	3.64	4.41	...	...	...
$4 \times 4 \times ^3/_8$	4.17	5.82	...	...	...
Detail C, Fig. A1					
$2^1/_2 \times 2^1/_2 \times ^1/_4$	1.68	1.79	1.87	1.93	2.00
$2^1/_2 \times 2^1/_2 \times ^5/_{16}$	1.98	2.13	2.23	2.32	2.40
$4 \times 3 \times ^1/_4$	3.50	3.73	3.89	4.00	4.10
$4 \times 3 \times ^5/_{16}$	4.14	4.45	4.66	4.82	4.95
$5 \times 3 \times ^5/_{16}$	5.53	5.96	6.25	6.47	6.64
$5 \times 3^1/_2 \times ^5/_{16}$	6.13	6.60	6.92	7.16	7.35
$5 \times 3^1/_2 \times ^3/_8$	7.02	7.61	8.03	8.33	8.58
$6 \times 4 \times ^3/_8$	9.02	10.56	11.15	11.59	11.93
Detail D, Fig. A1					
$4 \times 3 \times ^5/_{16}$	11.27	11.78	12.20	12.53	12.81
$4 \times 3 \times ^3/_8$	13.06	13.67	14.18	14.60	14.95
$5 \times 3 \times ^5/_{16}$	15.48	16.23	16.84	17.34	17.74
$5 \times 3 \times ^3/_8$	18.00	18.89	19.64	20.26	20.77
$5 \times 3^1/_2 \times ^5/_{16}$	16.95	17.70	18.31	18.82	19.23
$5 \times 3^1/_2 \times ^3/_8$	19.75	20.63	21.39	22.01	22.54
$6 \times 4 \times ^3/_8$	27.74	28.92	29.95	30.82	31.55
Detail E, Fig. A1					
$b = 10$	...	23.29	24.63	25.61	26.34
$b = 12$	...	29.27	31.07	32.36	33.33
$b = 14$	...	35.49	37.88	39.53	40.78
$b = 16$	...	42.06	45.07	47.10	48.67
$b = 18$	...	48.97	52.62	55.07	56.99
$b = 20$	...	56.21	60.52	63.43	65.73
$b = 22$	...	63.80	68.78	72.18	74.89
$b = 24$	...	71.72	77.39	81.30	84.45
$b = 26$	...	79.99	86.35	90.79	94.41
$b = 28$	...	88.58	95.66	100.65	104.77
$b = 30$	...	97.52	105.31	110.88	115.52
$b = 32$	...	106.78	115.30	121.47	126.66
$b = 34$	...	116.39	125.64	132.42	138.17
$b = 36$	...	126.33	136.32	143.73	150.07
$b = 38$	...	136.60	147.35	155.40	162.34
$b = 40$	...	147.21	158.71	167.42	174.99

GENERAL NOTE: See Fig. A1.

Copyright ASME International
Provided by IHS under license with ASME
No reproduction or networking permitted without license from IHS
Not for Resale

NONMANDATORY APPENDIX B
GUIDE TO THE SELECTION OF FILLER METALS

B1 SCOPE

The data in this Appendix have been included as a reference and as a guide in the selection of filler alloys suitable for welding aluminum-alloy storage tanks, where factors of resistance to corrosion as well as adequate strength of the weld must be considered.

B2 FACTORS TO BE CONSIDERED

This selection of the proper classification of filler metal depends primarily on the specific aluminum alloys of the parts to be welded and, additionally, on the welding process, the geometry of the joints, and the resistance to corrosion required in service. If contamination or decomposition of the tank contents is a problem, the proper choice of filler metal is an alloy that has at least as high a purity as the base metal.

B3 RECOMMENDED FILLER METALS

Experience has shown that certain classifications of filler metal are suitable for welding specific base metals and combinations of base metals. These are listed in Table B1. Combinations other than those listed must be evaluated as to suitability for the purpose intended. The alloy combinations listed will be suitable for most environments, but some are preferable from one or more standpoints and, in the absence of specific information, consultation with the material supplier is recommended.

Copyright ASME International
Provided by IHS under license with ASME
No reproduction or networking permitted without license from IHS
Not for Resale

TABLE B1 GUIDE TO THE SELECTION OF FILLER METAL

Parent Alloys →		6061 [Note (1)]					6063 [Note (1)]					5083, 5456					5086				
↓ Filler Alloys →		4043	5356	5554	5556	5654	4043	5356	5554	5556	5654	4043	5356	5554	5556	5654	4043	5356	5554	5556	5654
Characteristics																					
1060	W	A	B	...	B	...	A	B	...	B	...	A	A	...	A	...	A	A	...	A	...
	S	A	A	...	A	...	A	A	...	A	...	B	A	...	A	...	B	A	...	A	...
	C	A	...	...	...	...	A	...	...	...	...	B	A	...	A	...	B	A	...	A	...
	T	A	...	...	...	...	A	...	...	...	...	...	...	...	...	...	...	...	...	...	...
	D	C	A	...	B	...	C	A	...	B	...	C	A	...	B	...	C	A	...	B	...
1100	W	A	B	...	B	...	A	B	...	B	...	A	A	...	A	...	A	A	...	A	...
	S	A	A	...	A	...	A	A	...	A	...	B	A	...	A	...	B	A	...	A	...
	C	A	...	...	...	...	A	...	...	...	...	B	A	...	A	...	B	A	...	A	...
	T	A	...	...	...	...	A	...	...	...	...	...	...	...	...	...	...	...	...	...	...
	D	C	A	...	B	...	C	A	...	B	...	C	A	...	B	...	C	A	...	B	...
3003	W	A	B	...	B	...	A	B	...	B	...	A	A	...	A	...	A	A	...	A	...
	S	B	A	...	A	...	B	A	...	A	...	B	A	...	A	...	B	A	...	A	...
	C	A	...	...	...	...	A	...	...	...	...	B	A	...	A	...	B	A	...	A	...
	T	A	...	...	...	...	A	...	...	...	...	...	...	...	...	...	...	...	...	...	...
	D	C	A	...	B	...	C	A	...	B	...	C	A	...	B	...	C	A	...	B	...
Alclad 3003	W	A	B	...	B	...	A	B	...	B	...	A	A	...	A	...	A	A	...	A	...
	S	B	A	...	A	...	B	A	...	A	...	B	A	...	A	...	B	A	...	A	...
	C	A	B	...	B	...	A	B	...	B	...	B	A	...	A	...	B	A	...	A	...
	T	A	...	...	...	...	A	...	...	...	...	...	...	...	...	...	...	...	...	...	...
	D	C	A	...	B	...	C	A	...	B	...	C	A	...	B	...	C	A	...	B	...
3004	W	A	B	...	B	...	A	B	...	B	...	A	A	...	A	...	A	A	...	A	...
	S	C	B	...	A	...	C	B	...	A	...	C	B	...	A	...	C	B	...	A	...
	C	A	...	...	...	...	A	...	...	...	...	B	A	...	A	...	B	A	...	A	...
	T	A	...	...	...	...	A	...	...	...	...	...	...	...	...	...	...	...	...	...	...
	D	C	A	...	B	...	C	A	...	B	...	C	A	...	B	...	C	A	...	B	...
Alclad 3004	W	A	B	...	B	...	A	B	...	B	...	A	A	...	A	...	A	A	...	A	...
	S	C	B	...	A	...	C	B	...	A	...	C	B	...	A	...	C	B	...	A	...
	C	A	B	...	B	...	A	B	...	B	...	B	A	...	A	...	B	A	...	A	...
	T	A	...	...	...	...	A	...	...	...	...	...	...	...	...	...	...	...	...	...	...
	D	C	A	...	B	...	C	A	...	B	...	C	A	...	B	...	C	A	...	B	...
5050	W	A	B	...	B	...	A	B	...	B	...	A	A	...	A	...	A	A	...	A	...
	S	B	A	...	A	...	B	A	...	A	...	B	A	...	A	...	B	A	...	A	...
	C	A	...	...	...	...	A	...	...	...	...	B	A	...	A	...	B	A	...	A	...
	T	A	...	...	...	...	A	...	...	...	...	...	...	...	...	...	...	...	...	...	...
	D	C	A	...	B	...	C	A	...	B	...	C	A	...	B	...	C	A	...	B	...
5052, 5652 [Note (2)]	W	A	B	C	B	C	A	B	C	B	C	...	A	C	A	B	...	A	C	A	B
	S	D	B	C	A	C	B	A	A	A	A	...	B	C	A	C	...	B	C	A	C
	C	A	C	B	C	B	A	C	B	C	B	...	A	A	A	A	...	A	A	A	A
	T	A	...	A	...	...	A	...	A	...	...	...	...	...	...	...	...	...	...	...	...
	D	C	A	A	B	A	C	A	A	B	A	...	A	A	B	A	...	A	A	B	A
5154, 5254 [Note (2)]	W	A	B	C	B	C	A	B	C	B	C	...	A	B	A	B	...	A	B	A	B
	S	D	B	C	A	C	B	A	A	A	A	...	B	C	A	C	...	B	C	A	C
	C	A	C	B	C	B	A	C	B	C	B	...	A	A	A	A	...	A	A	A	A
	T	...	...	...	...	...	...	...	...	...	...	...	...	...	...	...	...	...	...	...	...
	D	C	A	A	B	A	C	A	A	B	A	...	A	A	B	A	...	A	A	B	A
5454	W	A	B	C	B	C	A	B	C	B	C	...	A	B	A	...	...	A	B	A	...
	S	D	B	C	A	C	B	A	A	A	A	...	B	C	A	...	...	B	C	A	...
	C	B	C	A	C	B	B	C	A	C	B	...	B	A	B	...	...	B	A	B	...
	T	A	...	A	...	...	A	...	A	...	...	...	...	...	...	...	...	...	...	...	...
	D	C	A	A	B	A	C	A	A	B	B	...	A	A	B	...	...	A	A	B	...

Copyright ASME International
Provided by IHS under license with ASME
No reproduction or networking permitted without license from IHS
Not for Resale

TABLE B1 GUIDE TO THE SELECTION OF FILLER METAL

5454					5154, 5254 [Note (2)]					5052, 5652 [Note (2)]					5050				←	Parent Alloys
4043	5356	5554	5556	5654	4043	5356	5554	5556	5654	4043	5356	5554	5556	5654	1100	4043	5356	5556	← Filler Alloys	
																			Characteristics	↓
A	B	C	B	...	A	B	C	B	C	A	B	...	B	...	B	A	B	B	W	1060
B	A	A	A	...	B	A	A	A	A	B	A	...	A	...	B	A	A	A	S	
C	B	A	B	...	C	B	A	B	A	A	...	...	...	...	A	A	...	...	C	
A	...	A	...	...	...	...	...	...	...	A	...	...	...	...	A	A	...	...	T	
C	A	A	B	...	C	A	A	B	A	C	A	...	B	...	A	D	B	C	D	
A	B	C	B	...	A	B	C	B	C	A	B	...	B	...	B	A	B	B	W	1100
B	A	A	A	...	B	A	A	A	A	B	A	...	A	...	B	A	A	A	S	
C	B	A	B	...	C	B	A	B	A	A	...	...	...	...	A	A	...	...	C	
A	...	A	...	...	...	...	...	...	...	A	...	...	...	...	A	A	...	...	T	
C	A	A	B	...	C	A	A	B	A	C	A	...	B	...	A	D	B	C	D	
A	B	C	B	...	A	B	C	B	C	A	B	...	B	...	A	A	B	B	W	3003
B	A	A	A	...	B	A	A	A	A	B	A	...	A	...	C	B	A	A	S	
C	B	A	B	...	C	B	A	B	A	A	...	...	...	...	A	A	...	...	C	
A	...	A	...	...	...	...	...	...	...	A	...	...	...	...	A	A	...	...	T	
C	A	A	B	...	C	A	A	B	A	C	A	...	B	...	A	D	B	C	D	
A	B	C	B	...	A	B	C	B	C	A	B	...	B	...	B	A	B	B	W	Alclad 3003
B	A	A	A	...	B	A	A	A	A	B	A	...	A	...	C	B	A	A	S	
C	B	A	B	...	C	B	A	B	A	A	B	...	B	...	A	A	B	B	C	
A	...	A	...	...	...	...	...	...	...	A	...	...	...	...	A	A	...	...	T	
C	A	A	B	...	C	A	A	B	A	C	A	...	B	...	A	D	B	C	D	
A	B	C	B	...	A	B	C	B	C	A	B	...	B	...	...	A	B	B	W	3004
D	B	C	A	...	D	B	C	A	C	C	B	...	A	...	...	B	A	A	S	
C	B	A	B	...	C	B	A	B	A	A	...	...	...	...	...	A	...	...	C	
A	...	A	...	...	...	...	...	...	...	A	...	...	...	...	...	A	...	...	T	
C	A	A	B	...	C	A	A	B	A	C	A	...	B	...	...	C	A	B	D	
A	B	C	B	...	A	B	C	B	C	A	B	...	B	...	...	A	B	B	W	Alclad 3004
D	B	C	A	...	D	B	C	A	C	C	B	...	A	...	...	B	A	A	S	
C	B	A	B	...	C	B	A	B	A	A	B	...	B	...	...	A	B	B	C	
A	...	A	...	...	...	...	...	...	...	A	...	...	...	...	...	A	...	...	T	
C	A	A	B	...	C	A	A	B	A	C	A	...	B	...	...	C	A	B	D	
A	B	C	B	...	A	B	C	B	C	A	B	...	B	...	C	A	B	B	W	5050
B	A	A	A	...	B	A	A	A	A	B	A	...	A	...	...	B	A	A	S	
C	B	A	B	...	C	B	A	B	A	A	...	...	...	...	A	A	...	...	C	
A	...	A	...	...	...	...	...	...	...	A	...	...	...	...	A	A	...	...	T	
C	A	A	B	...	C	A	A	B	A	C	A	...	B	...	A	D	B	C	D	
A	A	C	A	B	A	A	C	A	B	A	A	C	A	B					W	5052, 5652 [Note (2)]
D	B	C	A	C	D	B	C	A	C	D	B	C	A	C					S	
C	B	A	B	B	C	B	A	B	A	B	C	A	C	A					C	
A	...	A	...	...	...	...	...	...	...	A	...	B	...	...					T	
C	A	A	B	A	C	A	A	B	A	C	A	A	B	A					D	
...	A	B	A	B	...	A	B	A	B										W	5154, 5254 [Note (2)]
...	B	C	A	C	...	B	C	A	C										S	
...	B	A	B	A	...	B	A	B	A										C	
...	...	...	...	...	...	...	...	...	...										T	
...	A	A	B	A	...	A	A	B	A										D	
...	A	B	A	B															W	5454
...	B	C	A	C															S	
...	B	A	B	B															C	
...	...	A	...	...															T	
...	A	A	B	A															D	

(continued)

Copyright ASME International
Provided by IHS under license with ASME
No reproduction or networking permitted without license from IHS
Not for Resale

STD.ASME B96.1-ENGL 1999 ■ 0759670 0616365 511 ■

TABLE B1 GUIDE TO THE SELECTION OF FILLER METAL (CONT'D)

Parent Alloys →		Alclad 3004						3004						Alclad 3003			
↓ Filler Alloys →		1100	4043	5356	5554	5556	5654	1100	4043	5356	5554	5556	5654	1100	4043	5356	5556
	Characteristics																
1060	W	C	A	B	...	B	...	C	A	B	...	B	...	A	A	...	...
	S	B	A	A	...	A	...	B	A	A	...	A	...	B	A	...	...
	C	A	A	B	...	B	...	A	A	...	...	...	...	A	A	...	...
	T	A	A	...	...	...	...	A	A	...	...	...	...	A	A	...	...
	D	A	D	B	...	C	...	A	D	B	...	C	...	A	B	...	...
1100	W	C	A	B	...	B	...	C	A	B	...	B	...	A	A	...	...
	S	B	A	A	...	A	...	B	A	A	...	A	...	B	A	...	...
	C	A	A	B	...	B	...	A	A	...	...	...	...	A	A	...	...
	T	A	A	...	...	...	...	A	A	...	...	...	...	A	A	...	...
	D	A	D	B	...	C	...	A	D	B	...	C	...	A	B	...	...
3003	W	B	A	B	...	B	...	B	A	B	...	B	...	A	A	...	...
	S	C	B	A	...	A	...	C	B	A	...	A	...	B	A	...	...
	C	A	A	B	...	B	...	A	A	...	...	...	...	A	A	...	...
	T	A	A	...	...	...	...	A	A	...	...	...	...	A	A	...	...
	D	A	D	B	...	C	...	A	D	B	...	C	...	A	B	...	...
Alclad 3003	W	B	A	B	...	B	...	B	A	B	...	B	...	A	A	...	...
	S	C	B	A	...	A	...	C	B	A	...	A	...	B	A	...	...
	C	A	A	B	...	B	...	A	A	B	...	B	...	A	A	...	...
	T	A	A	...	...	...	...	A	A	...	...	...	...	A	A	...	...
	D	A	D	B	...	C	...	A	D	B	...	C	...	A	B	...	...
3004	W	...	A	B	C	B	C	...	A	B	C	B	C				
	S	...	D	B	C	A	C	...	D	B	C	A	C				
	C	...	A	C	B	C	B	...	A	...	B	...	B				
	T	...	A	...	A	...	...	...	A	...	A	...	...				
	D	...	C	A	A	B	A	...	C	A	A	B	A				
Alclad 3004	W	...	A	B	C	B	C										
	S	...	D	B	C	A	C										
	C	...	A	C	B	C	B										
	T	...	A	...	A	...	...										
	D	...	C	A	A	B	A										

Copyright ASME International
Provided by IHS under license with ASME
No reproduction or networking permitted without license from IHS
Not for Resale

TABLE B1 GUIDE TO THE SELECTION OF FILLER METAL (CONT'D)

3003		1100				1060			← Filler Alloys	Parent Alloys ↓
1100	4043	1100	4043	5356	5556	1188	1100	4043	Characteristics	
A	A	B	A	...	...	B	B	A	W	1060
B	A	B	A	...	...	B	B	A	S	
A	A	A	A	...	...	A	A	A	C	
A	A	A	A	...	...	A	A	A	T	
A	A	A	D	...	...	A	A	B	D	
A	A	B	A	...	...				W	1100
B	A	B	A	...	...				S	
A	A	A	A	...	...				C	
A	A	A	A	...	...				T	
A	B	A	D	...	...				D	
A	A								W	3003
B	A								S	
A	A								C	
A	A								T	
A	B								D	

(continued)

Copyright ASME International
Provided by IHS under license with ASME
No reproduction or networking permitted without license from IHS
Not for Resale

TABLE B1 GUIDE TO THE SELECTION OF FILLER METAL (CONT'D)

Parent Alloys →		6061 [Note (1)]					6063 [Note (1)]					5083, 5456					5086				
↓ Filler Alloys →		4043	5356	5554	5556	5654	4043	5356	5554	5556	5654	4043	5356	5554	5556	5654	4043	5356	5554	5556	5654
Characteristics																					
5086	W	A	A	B	A	B	A	A	B	A	B	...	A	...	A	...	...	A	...	A	...
	S	D	B	C	A	C	B	A	A	A	A	...	B	...	A	...	...	B	...	A	...
	C	A	A	A	A	A	A	A	A	A	A	...	A	...	A	...	...	A	...	A	...
	T	...	...	...	...	...	...	...	...	...	...	...	...	...	...	...	...	...	...	...	...
	D	C	A	A	B	A	C	A	A	B	A	...	A	...	B	...	...	A	...	B	...
5083, 5456	W	A	A	B	A	B	A	A	B	A	B	...	A	...	A	...					
	S	D	B	C	A	C	B	A	A	A	A	...	...	...	A	...					
	C	A	A	A	A	A	A	A	A	A	A	...	A	...	A	...					
	T	...	...	...	...	...	...	...	...	...	...	...	...	...	...	...					
	D	C	A	A	B	A	C	A	A	B	A	...	A	...	B	...					
6063 [Note (1)]	W	A	B	C	B	C	A	B	C	B	C										
	S	C	A	B	A	B	C	A	B	A	B										
	C	A	C	B	C	B	A	C	B	C	B										
	T	A	...	B	...	...	A	...	B	...	...										
	D	B	A	A	A	A	B	A	A	A	A										
6061 [Note (1)]	W	A	B	C	B	C															
	S	C	B	B	A	B															
	C	A	C	B	C	B															
	T	A	...	B	...	...															
	D	B	A	A	A	A															

GENERAL NOTES:

(a) Once the parent alloys have been determined, the governing factor in choosing a filler alloy then becomes the desired characteristics in the weld area.

Example: If one parent alloy is 6061 and the other 5052, and if ease of welding (*W*) is the desired characteristic, trace the *W* sector in the 5052 block (along the left margin) and note that 4043 (rated "A") is the filler alloy recommended.

(b) Filler alloys are rated on the following characteristics:

Symbol	Characteristics
W	Ease of welding
S	Strength of welded joint ("as-welded" condition); rating applies particularly to fillet welds; all filler alloys rated will develop minimum strength in butt welds of least strong parent alloy
C	The corrosion rating is based on the comparative solution potentials of parent and filler alloys, backed up by corrosion tests; in contact with an electrolyte such as seawater, relatively conductive fresh waters, or moist earth, a weld that is anodic to the plate alloy(s) may suffer selective corrosion, and the degree of attack would increase with difference in potential; in the absence of an electrolyte, as in most atmospheric conditions, the corrosion rating of all combinations would be "A"
T	Suitability for service at sustained temperatures above 150°F
D	Ductility as based on free bend elongation of the weld

(For certain welding procedures and thicknesses, some filler alloys with less than "A" rating on ductility may fail the bend test.)

(c) Ratings "A," "B," "C," and "D" are relative ratings in decreasing order of merit. The ratings have relative meaning only within a given block. Combinations having no rating are not usually recommended.

Filler alloy 5183 has the same ratings as 5556 except that welds made with 5183 are slightly more ductile and, in cases where the filler metal controls the weld strength, slightly less strong than welds made with 5556. Because of its lower strength, 5183 filler metal is not recommended for welding 5456.

NOTES:

(1) Rating does not cover these alloys when heat treated after welding.

(2) Filler alloy 5654 provides matching purity for compatibility.

Copyright ASME International
Provided by IHS under license with ASME
No reproduction or networking permitted without license from IHS
Not for Resale

NONMANDATORY APPENDIX C
BASIS FOR ALLOWABLE STRESS VALUES

C1 SCOPE

This Appendix explains and records the bases on which the various allowable stress values in Tables 4, 5, and 8 through 15 have been calculated.

(99) C2 SHELL CONSTRUCTION IN TABLE 4

The allowable stresses in Table 4 apply to welded construction. For all alloys other than the heat-treatable alloys 6061 and 6063, the allowable stress values are based on the properties of the alloy in the annealed condition. For 6061 and 6063, which are only partially annealed by the heat of welding, the allowable stress values are based on the strengths of groove welds.

The maximum allowable stress values in Table 4 are determined as the lowest of the following when the tensile and yield strengths are obtained from standard short-time tests [see para. C8(a)]:

(a) 33⅓% of the tensile strength as adjusted to minimum;

(b) 80% of the yield strength (as defined in the alloy material specification) as adjusted to minimum;

(c) the stress producing a secondary creep rate of 0.1 cru (creep rupture units) or 0.1% in 10,000 hr [see para. C8(b)];

(d) 67% of the average stress for rupture at the end of 100,000 hr [see para. C8(b)].

The creep and stress rupture strengths given in (c) and (d) above are determined as in para. C7.

C3 FILLET WELDS IN TABLE 5

The allowable stresses for fillet welds in shear in Table 5 were determined by dividing the minimum ultimate strengths of fillet welds in longitudinal shear by 4.

C4 ROOF PLATES IN TABLE 9

The allowable stresses for roof plates in Table 9 apply to welded construction, using filler alloys that can be qualified for groove welds in combination with the roof plate alloys. For all alloys other than the heat-treatable alloys 6061 and clad 6061, the allowable stress values are based on the properties of the alloy in the annealed condition. For these nonheat-treatable alloys, two sets of stresses are shown.

C4.1 (99)

For those stresses indicating Note (3), the maximum allowable stress values are determined as the lowest of the following when the tensile and yield strengths are obtained from standard short-time tests [see para. C8(b)] and the creep and stress rupture strengths are determined as in para. C7:

(a) 100% of the minimum yield stength;

(b) the stress producing a secondary creep rate of 0.1 cru (creep rupture units) or 0.1% in 10,000 hr [see para. C8(b)];

(c) 67% of the average stress for rupture at the end of 100,000 hr [see para. C8(b)].

C4.2

For the heat-treatable alloys 6061 and clad 6061, which are only partially annealed by the heat of welding, the maximum allowable stress values are determined as 40% of the minimum strengths of groove welds.

It was also determined that the tensile membrane stresses of Fig. 12 would not exceed 37½% of the allowable tensile working stresses from Table 4.

C5 ROOF SUPPORTS IN TABLES 10 THROUGH 15 (99)

The allowable stresses for beams, columns, rivets, bolts, etc., for roof-supporting structures in Tables 10 through 15 at temperatures up to 100°F are the same as those recommended for buildings and similar structures in Specification for Aluminum Structures, published by the Aluminum Association [see para. C8(c)]. For higher temperatures, the allowable stresses are corresponding values based on the mechanical properties at elevated temperatures (see explanation on compression stresses in the following paragraphs). These allow-

Copyright ASME International
Provided by IHS under license with ASME
No reproduction or networking permitted without license from IHS

Not for Resale

able stresses represent a factor of safety of at least 1.65 on specified yield strength and 1.95 on specified ultimate strength [see para. C8(c)].

In determining the allowable tensile stress on welds at temperatures up to 100°F, the minimum tensile strength of a butt weld was considered to be 90% of the test value required for ASME qualification [see para. C8(d)]. The minimum tensile and compressive yield strengths of a butt weld correspond to a 0.2% offset on a 10 in. gage length [see para. C8(e)]. For elevated temperatures, adjustments are made consistent with the properties of the weld at those temperatures.

The inelastic compressive buckling stress in columns was approximated by a straight line relation with slenderness ratio. The applicability of this straight line approximation has been extensively confirmed by tests [see para. C8(f)].

The axial-compression stresses and bending-compression stresses for cross sections farther than 1.0 in. from any weld were determined by applying a factor of safety of 1.65 to the minimum compressive yield strength at the temperature involved. The results thus obtained were then divided by a factor of 1.12, which adjusts the factor of safety on compressive yield strength in order to provide a range of slenderness ratios in the short column range for which the allowable stress is independent of the slenderness ratio. This is a convenience to the designer and is consistent with the specification of the Aluminum Association [see para. C8(c)]. For cross sections with 1.0 in. of a weld, the factor 1.12 was not applied.

The formulas for allowable stresses for compression in extreme fibers of shapes, girders, and built-up members subjected to bending are conservative approximations of more precise formulas that can be found in Specification for Aluminum Structures published by the Aluminum Association [see para. C8(c)].

End welds are not considered to affect the buckling strength of columns or beams in the range of slenderness ratio (L/r, L_b/r_y, or h/t) where design is controlled by buckling [see para. C8(g)].

The minimum shear strength of rivets is considered to be equal to the typical strength divided by 1.15. The allowable shear stresses for rivets and bolts and the allowable tensile stresses for bolts are determined by applying to the minimum shear and tensile strengths, respectively, factors of safety 20% higher than the basic factors of safety applied to minimum strength values elsewhere in this Standard.

The allowable bearing stresses on milled surfaces and pins are equal to two-thirds the allowable bearing stress on rivets and bolts.

C6 BOLTS IN TABLE 8 (99)

The allowable stresses for bolts in Table 8 apply to bolts for shell connection appurtenances. The maximum allowable stress values assume that the bolts are not welded and are determined as the lowest of the following when the tensile and yield strengths are obtained from standard short-time tests [see para. C8(a)]:

(a) 25% of the tensile strength as adjusted to minimum;

(b) $33\frac{1}{3}$% of the yield strength (as defined in the alloy material specification) as adjusted to minimum;

(c) the stress producing a secondary creep rate of 0.1 cru (creep rupture units) or 0.1% in 10,000 hr [see para. C8(b)];

(d) the stress producing rupture in 100,000 hr [see para. C8(b)].

The creep and stress rupture strengths given in (a) through (d) above are determined as in para. C7.

C7 CREEP AND STRESS RUPTURE STRENGTHS

The creep and stress rupture strengths have been determined by one of the following:

(a) by extrapolating from plots of the results of creep and stress rupture tests in a manner described in: Interpretation of Creep and Stress-Rupture Data by Francis B. Foley, *Metal Progress*, June 1947, 951–958;

(b) by conducting creep and stress rupture tests of sufficient duration to supply the required data.

C8 REFERENCES (99)

The following is a list of publications referenced in this Appendix.

(a) ASTM B 557, Methods of Tension Testing Wrought and Cast Aluminum and Magnesium Products; American Society for Testing and Materials (ASTM), 100 Barr Harbor Drive, West Conshohocken, PA 19428.

(b) ASTM E 139, Practice for Conducting Creep, Creep-Rupture, and Stress-Rupture Tests of Metallic Materials; American Society for Testing and Materials (ASTM), 100 Barr Harbor Drive, West Conshohocken, PA 19428.

(c) Specification for Aluminum Structures; Aluminum Association, 900 19th Street, NW, Washington, DC 20006.

(d) ASME Boiler and Pressure Vessel Code, Section IX, QW-150; American Society of Mechanical Engineers (ASME), Three Park Avenue, New York, NY

Copyright ASME International
Provided by IHS under license with ASME
No reproduction or networking permitted without license from IHS
Not for Resale

STD.ASME B96.1-ENGL 1999 ■ 0759670 0616370 989 ■

10016; Order Department: 22 Law Drive, Box 2300, Fairfield, NJ 07007.

(e) Hill, N. H.; Clark, J. W.; Brungraber, R. J. Design of Welded Aluminum Structures. *Transactions of the American Society of Civil Engineers.* Vol. 127: Part II, 1962; 102.

(f) Hill, H. N.; Clark, J. W. *Straight Line Column Formulas for Aluminum Alloys, Technical Paper 12.* Pittsburgh, PA: Alcoa Research Laboratories, Aluminum Company of America, 1955.

(g) Brungraber, R. J.; Clark, J. W. Strength of Welded Aluminum Columns. *Transactions of the American Society of Civil Engineers.* Vol. 127: Part II, 1962; 202.

Copyright ASME International
Provided by IHS under license with ASME
No reproduction or networking permitted without license from IHS
Not for Resale

NONMANDATORY APPENDIX D
COMPATIBILITY OF METALS AND PROTECTION AGAINST CORROSION

D1 SCOPE

Provision for protection against corrosion is not a part of this Standard, and detailed information on this subject is beyond the scope of this Appendix. However, a number of factors are called to attention that have been found by experience to be a cause of corrosion unless adequate precautions are taken.

D2 COMPATIBILITY OF ALUMINUM ALLOYS

D2.1 Selection of Alloys

Some factors to be considered in the selection of alloys for aluminum-tank construction are given in paras. D2.1.1 through D2.1.4.

D2.1.1 All the aluminum alloys covered by this Standard except 2024 exhibit a similar resistance to corrosion when they are used within their recommended temperature limitations. Some are superior to others in resisting corrosion by certain tank ladings but, in general, such differences will be slight.

D2.1.2 Similarly, all the alloys covered are compatible with each other in most environments. In some special cases, however, certain parent alloy combinations or parent alloy filler metal combinations are required to minimize the hazard of galvanic corrosion.

D2.1.3 A reduction in resistance to corrosion and stress corrosion cracking can develop in alloys 5083, 5086, 5154, 5254, and 5456, if they are exposed to sustained temperatures in excess of 150°F. Limiting conditions are given in para. 5.2.2 and Table 4.

D2.1.4 Where sensitive ladings such as hydrogen peroxide are being handled, decomposition is usually minimized by utilizing high-purity base alloys such as 5254 or 5652 with filler alloy 5654, or high-purity aluminum (alloy 1060) with a filler of equal or higher purity. High-purity claddings on standard alloys are also employed.

D2.2 Filler Metals for Welding

Recommendations for selecting filler metals are given in Appendix B.

D3 DISSIMILAR METAL CONTACTS

D3.1 Aluminum to Steel

When aluminum surfaces are joined to steel, as in the case of aluminum roofs or top rings attached to steel tank shells, steel appurtenances attached to aluminum tanks, or aluminum-to-steel flanged joints, the possibility of moisture entrapment should be eliminated or the joining surfaces should be protected against galvanic corrosion. This can be accomplished by the use of one or more of the following procedures:

(a) galvanizing the steel (usually effective as long as the zinc lasts);

(b) coating the joining surfaces with a zinc-chromate primer in accordance with Federal Specification TT-P-645, followed by two coats of paint consisting of 21 lb of aluminum paste pigment (ASTM Specification D 962-81, Type 2 Class B) per gallon of varnish meeting Federal Specification TT-V-81, Type II, or the equivalent;

(c) using a joint compound capable of excluding moisture from the joint for long periods of time;

(d) using a gasket of suitable material; and/or

(e) coating the joining surfaces with not less than 2 coats of inorganic zinc paint.

D3.2 Aluminum to Stainless or Coated Steel

Stainless steel of the 18-8 type, or aluminized or galvanized steel contacting aluminum, need not usually be painted. Exceptions involve unusual environmental conditions that result in rapid consumption of the coating or that result in a lack of compatibility of aluminum and stainless steel. The compatibility of aluminum with these materials is reflected in para. 2.10, which covers bolting.

Previous page is blank

Copyright ASME International
Provided by IHS under license with ASME
No reproduction or networking permitted without license from IHS
Not for Resale

D3.3 Marking Materials

Under some conditions, marking materials containing carbon or heavy metal compounds can cause corrosion of aluminum. Chalk, wax-base crayons, or marking inks with organic coloring are usually satisfactory.

D4 PROTECTION OF THE TANK BOTTOM

Special consideration should be given to minimizing corrosion of the tank bottom. This involves adequate attention to the design and construction of the foundation with regard to the following details:

(a) Adequate drainage should be provided for both groundwater (see para. E4.1) and tank roof runoff (see para. E7.2).

(b) Fill or grading materials should not contain any substances that could cause electrolysis or corrosion (see para. E3.4).

(c) The finished grade should consist of inert materials treated with a protective coating (see paras. E4.4 and E6.4). Further protection may be provided by a suitable continuous membrane having impervious and dielectric properties, laid under the finished grade approximately 4 in. below the tank bottom.

(d) Stray electric currents, and galvanic action resulting from electrical connections to structures of dissimilar metals also in contact with the ground, should be minimized. This might involve the use of a dielectric membrane, as in (c) above, with a separate ground for the tank. Cathodic protection may also be desirable.

D5 CREVICES

The elimination of crevices may be necessary for reasons such as the following:

(a) Under some conditions, corrosion is accelerated in crevices.

(b) Entrapment of food, pharmaceuticals, or other sensitive products may lead to product degradation.

(c) Subsequent welding may be difficult or even hazardous.

If crevice elimination is necessary, consideration should be given to locations such as roof column support plates, brackets and gussets, roof plates, nozzles and manholes, and welds for which complete penetration is not required by this Specification.

Copyright ASME International
Provided by IHS under license with ASME
No reproduction or networking permitted without license from IHS
Not for Resale

NONMANDATORY APPENDIX E
RECOMMENDED PRACTICE FOR FOUNDATIONS

E1 SCOPE

This Appendix is intended to recommend certain features that have been found by experience to be desirable and to point to other situations or conditions that should not be overlooked in the design and construction of adequate foundations.

E2 GENERAL

These recommendations apply to the design and construction of foundations for flat bottom, vertical wall, aluminum-alloy, aboveground storage tanks of the types covered by this Standard. Obviously, because of the wide variety of surface, subsurface, and climatic conditions, it is not practical to establish design recommendations to cover all situations. The allowable soil loading and the exact type of subsurface construction to use must necessarily be decided for each individual case after careful consideration. The same rules and precautions should be used in the selection of foundation sites as would be applicable in designing or building foundations for any other structure of comparable magnitude. Consideration should also be given to means to protect the tank bottom against corrosion (see para. D4).

E3 SUBSURFACE PREPARATION

E3.1 Nature of Site

At any tank site, the nature of the subsurface conditions must be known in order to estimate the amount of settlement that will be experienced and the probable result. This information may be obtained by exploratory work consisting of making deep borings and load and soil tests, and by review of experience and history of similar structures in the vicinity. The subgrade must be capable of sustaining the load of the tank and its contents without unequal or nonuniform settlement, which would distort the tank and introduce stresses from external causes. The total of final uniform settlement must not be sufficient to strain connecting piping or produce inaccuracies of gaging, nor should the settlement continue to a point where the tank bottom is below the surrounding ground surface.

E3.2 Special Site Conditions

Some of the many variations in conditions requiring special engineering consideration are the following:

(a) hillside sites, where part of a tank may be on undisturbed ground or rock and part on fill or other construction, or where the depth of required fill is variable;

(b) sites on swampy or filled ground, where layers of muck or compressible vegetation are at or below the surface, or where unstable or corrosive materials may have been deposited as fill;

(c) sites underlaid by layers of plastic clay, which may temporarily support heavy loads but which will settle excessively over long periods of time;

(d) sites adjacent to water courses or deep excavations, where lateral stability of the ground is questionable;

(e) sites immediately adjacent to heavy structures that distribute some of their load to the subsoil under the tank site, thereby reducing its capacity to carry the additional load without excessive settlement;

(f) sites where tanks may be exposed to flood waters, resulting in possible uplift, displacement, or scour.

E3.3 Stabilizing the Subgrade

If the subgrade is weak and inadequate to carry the load of the filled tank without excessive settlement, it should be recognized that shallow or superficial construction under the tank bottom will not significantly improve it. One or more of the following general methods should be considered:

(a) Remove the objectionable material and replace it with other suitable and compact material.

(b) Compact the soft material with short piles or by preloading with an overburden of earth suitably drained, or with other material.

(c) Compact the soft material by removal of the water content by drainage, if practicable.

Copyright ASME International
Provided by IHS under license with ASME
No reproduction or networking permitted without license from IHS
Not for Resale

(d) Stabilize the soft material by chemical methods or injection of cement grout.

(e) Support the load on a more stable material underneath the subgrade by driving bearing piles or constructing foundation piers down to it. This will involve construction of a reinforced slab on the piles to distribute the load of the tank bottom.

(f) Construct a foundation of some type that will distribute the load over a sufficiently large area of the soft material, so that the load intensity will be within allowable limits and excessive settlement will not occur.

E3.4 Fill Materials

The fill material used to replace muck or other objectionable materials or to build up the grade to a suitable height should be sound, durable, and noncorrosive to aluminum. It should be free of vegetation and organic matter and should not contain any substances that would cause corrosion of the tank bottom, such as cinders, slag, chlorides, and chemical wastes.

E4 GRADING

E4.1 Drainage

The grade or surface on which the tank bottom will rest, even after settlement, should be above the surrounding ground surface in order to be suitably drained.

E4.2 Finished Grade

The top 3 or 4 in. of finished grade should consist of clean sand, gravel, crushed stone (not over 1 in. in maximum size), or similar inert material that can be readily shaped to the proper contour. During construction, the movement of equipment and materials across the grade will mar the surface of the softer materials. These irregularities should be corrected before the bottom plates are placed for welding.

E4.3 Grade and Crown

The finished tank grade should conform to the design shape of the tank bottom, giving due consideration to the possibility of the ultimate settlement of the center.

E4.4 Protection of Tank Bottom

The finished grade may be stabilized in some manner that is not detrimental to the bottom or hazardous with respect to the contents of the tank in order to preserve better contour during construction and to protect the tank bottom against ground moisture. Caution should be observed that the material used for this purpose does not create welding or corrosion problems and would not react with the contents of the tank in case of a leak or spillage (see also Appendix D, para. D4).

E5 CONCRETE SLAB FOUNDATIONS

E5.1 Protection of Tank Bottom

If the tank is built on a concrete slab, a suitable cushion for the bottom should be provided. This may be a suitable membrane, such as a $\frac{1}{4}$ in. asphalt-impregnated fiberboard, a coating of mastic material, or a layer of clean sand, as discussed in paras. E4.2, E4.3, and E4.4.

E5.2 Design

The annular portion of the surface of the foundation upon which the shell rests should be smooth and level within $\pm\frac{1}{8}$ in. in any 30 ft circumferential length. No point in the entire circumference should vary more than $\frac{1}{4}$ in. from the established elevation. The finished slab surface should conform to the design shape of the tank bottom. No point in any diametral line across the slab should vary more than $\frac{1}{4}$ in. from the established elevation or profile. Recesses should be provided in the foundation for flush-type cleanouts, drawoff sumps, and any other appurtenances that require recessing.

E6 CONCRETE RINGWALL FOUNDATIONS

E6.1 Use and Advantages

Large tanks and tanks with high shells impose substantial loads on the foundation under the shell. This is particularly important for floating roof tanks with regard to shell distortion. In these or any other cases where the ability of a foundation to carry the shell loads directly is doubtful, it is recommended that a ringwall foundation be used. Foundations with ringwalls have the following advantages over a foundation without a ringwall:

(a) They will provide better distribution of the concentrated load of the shell to produce a more nearly uniform soil loading under the tank.

(b) They will provide a level and solid starting plane for construction of the shell.

(c) They will provide a better means for leveling

Copyright ASME International
Provided by IHS under license with ASME
No reproduction or networking permitted without license from IHS Not for Resale

the tank grade and preserving its contour during construction.

(d) They will retain the fill under the tank bottom and prevent loss of material from erosion.

(e) They will act to minimize moisture under the tank.

E6.2 Design

When designing concrete ringwalls, it is desirable that they be so proportioned that the average unit soil loading under the wall will be approximately the same as under the confined earth at the same depth. It is recommended that the thickness of ringwalls be not less than 12 in. and that the center-to-center diameter equal the nominal tank diameter. The depth of the wall will depend on local conditions, but there appears to be no need to construct the wall to any greater depth than the soil is disturbed in constructing the fill and grade under the tank, as it adds little to the gross area and nothing to the sustaining capacity of the subsoil. The top of the wall should be smooth and level within $\pm 1/8$ in. in any 30 ft circumferential length. No point in the circumference of the wall should vary more than $\pm 1/4$ in. from the established elevation. Recesses should be provided in the wall for flush-type cleanouts, drawoff sumps, and any other appurtenances that require recessing.

E6.3 Reinforcement

The ringwall should be reinforced against temperature and shrinkage and to resist the lateral pressure of the confined fill with its surcharge. It is suggested that the minimum reinforcing in any ringwall be 0.002 times the cross-sectional area of the wall above grade, with additional reinforcement as may be required for resisting lateral earth pressure. Reference to ANSI/ACI 318, Building Code Requirements for Reinforced Concrete, is recommended for stress values and material specifications.

E6.4 Protection of Tank Bottom

A suitable membrane, such as $1/4$ in. asphalt-impregnated fiberboard (see precautions in para. E4.4), should be provided over the top of the ringwall to protect the aluminum-alloy plates from localized stresses and corrosion. Care should be exercised to ensure that such membrane is not damaged in laying or welding the plates.

E7 EARTH FOUNDATIONS

E7.1 Use

For small tanks, suitable earth foundations may be satisfactory. The proper selection of site, investigation of soil conditions, and preparation of the grade, however, are of great importance in this type of foundation. Particular care should be used to prepare a smooth surface, level within $\pm 1/8$ in. in any 10 ft of circumference and within $\pm 1/2$ in. in the total circumference measured from the average elevation.

E7.2 Berm

The finished tank grade should continue outside of the tank periphery to form a berm at least 3 ft wide all around. This shoulder and berm should be protected against weathering and tank roof runoff by constructing it of crushed rock or covering it with paving material. If the latter is used, the level of its highest surface should be below that of the underside of the lowest peripheral aluminum member so that drainage is away from the tank.

Copyright ASME International
Provided by IHS under license with ASME
No reproduction or networking permitted without license from IHS
Not for Resale

NONMANDATORY APPENDIX F (99)
QUALITY SYSTEM PROGRAM

The tanks manufactured in accordance with this Standard shall be produced under quality system program following the principles of an appropriate standard from the ISO 9000 series.[1] A determination of the need for registration and/or certification of the manufacturer's quality system program by an independent organization shall be the responsibility of the manufacturer. The detailed documentation demonstrating program compliance shall be available to the purchaser at the manufacturer's facility. A written summary description of the program utilized by the manufacturer shall be available to the purchaser upon request.

---

[1] The series is also available from the American National Standards Institute (ANSI) and the American Society for Quality (ASQ) as American National Standards that are identified by a prefix "Q" replacing the prefix "ISO." Each standard of the series is listed in Section 10, References.

Previous page is blank

Copyright ASME International
Provided by IHS under license with ASME
No reproduction or networking permitted without license from IHS
Not for Resale

ASME Services

ASME is committed to developing and delivering technical information. At ASME's Information Central, we make every effort to answer your questions and expedite your orders. Our representatives are ready to assist you in the following areas:

ASME Press
Codes & Standards
Credit Card Orders
IMechE Publications
Meetings & Conferences
Member Dues Status
Member Services & Benefits
Other ASME Programs
Payment Inquiries
Professional Development
Short Courses
Publications
Public Information
Self-Study Courses
Shipping Information
Subscriptions/Journals/Magazines
Symposia Volumes
Technical Papers

How can you reach us? It's easier than ever!

There are four options for making inquiries* or placing orders. Simply mail, phone, fax, or E-mail us and an Information Central representative will handle your request.

Mail	*Call Toll Free*	*Fax-24 hours*	*E-Mail-24 hours*
ASME	**US & Canada:** 800-THE-ASME	973-882-1717	Infocentral
22 Law Drive, Box 2900	(800-843-2763)	973-882-5155	@asme.org
Fairfield, New Jersey	**Mexico:** 95-800-THE-ASME		
07007-2900	(95-800-843-2763)		
	Universal: 973-882-1167		

* Information Central staff are not permitted to answer inquiries about the technical content of this code or standard. Information as to whether or not technical inquiries are issued to this code or standard is shown on the copyright page. All technical inquiries must be submitted in writing to the staff secretary. Additional procedures for inquiries may be listed within.

Copyright ASME International
Provided by IHS under license with ASME
No reproduction or networking permitted without license from IHS
Not for Resale

STD.ASME B96.1-ENGL 1999 0759670 0616378 17T

ISBN 0-7918-2594-9



A12699

Copyright ASME International
Provided by IHS under license with ASME
No reproduction or networking permitted without license from IHS

Not for Resale