M-25-19

AMERICAN NATIONAL STANDARD

HOBS

ANSI B94.7 - 1980

[REVISION OF ANSI B94.7-1966 (R 1972)]

SECRETARIAT

THE AMERICAN SOCIETY OF MECHANICAL ENGINEERS

PUBLISHED BY

THE AMERICAN SOCIETY OF MECHANICAL ENGINEERS

United Engineering Center 345 East 47th Street New York, N. Y. 10017

Copyright ASME International
Provided by IHS under license with ASME
No reproduction or networking permitted without license from IHS

Not for Resale

Date of Issuance: March 15, 1981

No part of this document may be reproduced in any form, in an electronic retrieval system or otherwise, without the prior written permission of the publisher.

Copyright ©1981 by
THE AMERICAN SOCIETY OF MECHANICAL ENGINEERS
All Rights Reserved
Printed in U.S.A.

Copyright ASME International
Provided by IHS under license with ASME
No reproduction or networking permitted without license from IHS

Not for Resale

FOREWORD

In response to requests from both users and producers a project was initiated in December of 1961 to establish standards for gear cutting tools.

Sectional Committee B5 approved this project at their annual meeting in 1961 and created technical committee TC-14 to prepare such standards.

In 1962 Sectional Committee B5 was divided and Technical Committees identified with the general area of "Metal Cutting" were transferred to a new Sectional Committee B94.

The first meeting of TC-14; reporting to Sectional Committee B94, was held in December 1962. It was at this time decided to divide the general subject into three areas, i.e., Hobs, Gear Shaper Cutters and Shaving Cutters. The initial activity was to prepare a proposal for an American Standard on Hobs, using the industry standards (MCTI) as the basis for consideration.

A proposal covering Hobs was submitted to industry in September 1964 for review and comment. All of the resulting responses were considered at a meeting of TC-14 in March 1965 and they then approved a final proposal.

The B94 TC-15 Editorial Committee reviewed the proposal and it was submitted on October 27, 1965 to the B94 Sectional Committee for Letter Ballot. Following approval by B94 the proposal was approved by the Sponsor, ASME, and on June 22, 1966 it was approved by the American Standards Association and designated B94.7-1966.

The committee was assigned the project of reviewing ASA B94.7-1966 for reaffirmation or revision. The consensus was to review the existing standard and add additional hob sizes to include the larger size nominal diameter bores based on the requirements of the larger hobbing machines in use today. Multiple-thread involute spline hob sizes and tolerances have also been added. We have also made a number of editorial changes.

The current revision, after approval of the B94 Standards Committee and the Secretariat, was approved by ANSI on October 27, 1980 and designated B94.7-1980.

Copyright ASME International
Provided by IHS under license with ASME
No reproduction or networking permitted without license from IHS
Not for Resale

AMERICAN NATIONAL STANDARDS COMMITTEE B94
Cutting Tools, Holders, Drivers and Bushings

(The following is the roster of the Committee at the time of approval of this Standard)

OFFICERS

A. R. Neinast, *Chairman*

A. M. Mezey, *Vice-Chairman* **R. K. Buckley,** *Secretary*

AMERICAN GEAR MANUFACTURERS ASSOCIATION
- *P. M. Dean, Jr.,* Mechanical Technology, Inc. Latham, New York
- *R. C. Brown, Alternate,* Manager of Engineering Services, Arlington, Virginia

AMERICAN SOCIETY OF MECHANICAL ENGINEERS
- *M. E. Merchant, Jr.,* Cincinnati Milacron, Inc., Cincinnati, Ohio
- *C. J. Oxford, Jr.,* National Twist Drill & Tool Co., Rochester, Michigan
- *G. F. Wilson, Alternate,* General Electric Co., Worthington, Ohio

CEMENTED CARBIDE PRODUCERS ASSOCIATION
- *J. A. Woodward,* Teledyne Firth Sterling, Pittsburgh, Pennsylvania
- *A. P. Wherry, Alternate,* Cemented Carbide Producers Association, Cleveland, Ohio

CUTTING TOOL MANUFACTURERS ASSOCIATION
- *E. J. Czopor,* Falcon Tool Company, Warren, Michigan
- *C. W. Jatho, Alternate,* Cutting Tool Manufacturers Association, Birmingham, Michigan

GENERAL SERVICES ADMINISTRATION
- *W. R. Wacker,* Federal Supply Service (FMET), Washington, D.C.

HACK & BAND SAW MANUFACTURERS ASSOCIATION OF AMERICA
- *W. B. Korb,* The Henry G. Thompson Company, Branford, Connecticut
- *C. M. Stockinger, Alternate,* Hack & Band Saw Manufacturers Association of America, Cleveland, Ohio

METAL CUTTING TOOL INSTITUTE
- *W. A. Wagner,* Cleveland Twist Drill Company, Cleveland, Ohio
- *F. A. Petersen,* Metal Cutting Tool Institute, Cleveland, Ohio

MOTOR VEHICLE MANUFACTURERS ASSOCIATION
- *A. R. Neinast,* Corporate Standards International Harvester, Hinsdale, Illinois
- *B. R. Ashby, Alternate,* Motor Vehicle Manufacturers Association of the United States, Inc., Detroit, Michigan

NATIONAL ASSOCIATION OF PUNCH MANUFACTURERS
- *R. Thomas,* Dayton Progress Corp., Dayton, Ohio

NATIONAL MACHINE TOOL BUILDERS' ASSOCIATION
- *G. F. Wilson,* General Electric Company, Worthington, Ohio
- *J. B. Deam, Alternate,* National Machine Tool Builder's Association, McLean, Virginia

SOCIETY OF CARBIDE ENGINEERS
- *C. H. Lang,* Society of Carbide Engineers, Bridgeville, Pennsylvania

SOCIETY OF MANUFACTURING ENGINEERS
- *K. A. Lundell,* The Producto Machine Company, Jamestown, New York
- *H. McLinden,* Caterpillar Tractor Company, Peoria, Illinois
- *W. N. Moore,* The Ford Motor Company, Dearborn, Michigan

TELEPHONE GROUP
- *R. A. Agnew,* Western Electric Co., Inc. Chicago, Illinois
- *S. P. Rogacki, Alternate,* Western Electric Company Inc., Kearny, New Jersey

Copyright ASME International
Provided by IHS under license with ASME
No reproduction or networking permitted without license from IHS
Not for Resale

TUBULAR RIVET AND MACHINE INSTITUTE
S. Rooney, Alternate, Hi-Pro Tool Company, New Bedford, Massachusetts

U. S. DEPARTMENT OF THE ARMY
D. L. York, Liaison, U. S. Army Armament, Rock Island, Illinois

U. S. DEPARTMENT OF THE NAVY
J. R. Ruff, Naval Ship Systems Command (SEA 605)., Washington, D.C.

INDIVIDUAL COMPANIES
H. Cooper, AES Certification Institute, Troy, Michigan
K. Hull, The Ingersoll Milling Machine Company, Rockford, Illinois
A. M. Mezy, Richards Bros. Punch Company, Detroit, Michigan
L. Storrer, Mohawk Tools, Inc., Montpelier, Ohio
A. Ashburn, McGraw-Hill, New York, New York

TECHNICAL COMMITTEE 14, GEAR CUTTING TOOLS

Herbert Gregg, Chairman, Star Cutter Company, Farmington, Michigan
Norman Nau, Secretary, Union/Butterfield, Litton Industries, Athol, Massachusetts
Alfred N. Ackerson, Chrysler Corporation, New Process Gear Division, Syracuse, New York
Charles C. Fry, Marion Power Shovel Division, Dresser Industries, Inc., Marion, Ohio
P. W. Kelly, Barber-Colman Company, Cutting Tool Division, Loves Park, Illinois
Richard Newman, National Broach and Machine Division, Lear Siegler, Inc., Detroit, Michigan
David W. Patch, Fairfield Manufacturing Company, Inc., Lafayette, Indiana
Wilbur Pergande, Illinois/Eclipse, Chicago, Illinois
Gene C. Pfalzgraf, John Deere Tractor Works, Waterloo, Iowa
H. E. White, Caterpillar Tractor Company, Basic Engine, Peoria, Illinois

Copyright ASME International
Provided by IHS under license with ASME
No reproduction or networking permitted without license from IHS
Not for Resale

CONTENTS

Page

1. SCOPE 1
2. PURPOSE 1
3. DEFINITION OF A HOB 1
4. DESCRIPTION OF HOB TYPES COVERED 1
5. NOMENCLATURE 1
6. TABLES 6

TABLES

1 Single Thread Coarse Pitch Hob Sizes for Ground and Unground Hobs 7
2 Multiple Thread Coarse Pitch Hob Sizes for Ground and Unground Hobs 7
3 Single Thread Fine Pitch Hob Sizes for Ground and Unground Hobs 8
4 Multiple Thread Fine Pitch Hob Sizes for Ground and Unground Hobs 8
5 Single Thread Combination Pitch Hob Sizes for Ground and Unground Hobs 8
6 Single Thread Hob Sizes for Parallel Side Splines 9
7 Single Thread Hob Sizes for 30°, 37.5° and 45° P.A. Involute Splines 10
8 Multiple Thread Hob Sizes for 30°, 37.5° and 45° P.A. Involute Splines 10
9 Roller Chain Sprocket Hob Sizes Single Thread, for Chain Pitches, .250 thru 3.000. 11
10 Single Thread Coarse Pitch Gear Hob Tolerances 12
11 Multiple Thread Coarse Pitch Gear Hob Tolerances 14
12 Single Thread Fine Pitch Gear Hob Tolerances 17
13 Multiple Thread Fine Pitch Gear Hob Tolerances 19
14 Single Thread Hobs for Parallel Side Splines 21
15 Single Thread Hob Tolerances for 30° P.A. Involute Splines 23
16 Multiple Thread Hob Tolerances for 30° P.A. Involute Spines 25
17 Single Thread Hob Tolerances for 37.5° and 45° P.A. Involute Splines 27
18 Marking Symbols 29
19 Standard Keyways for Hobs 30

FIGURES

1 Illustration of Terms Relating to Hobs 2
2 Climb Hobbing 3
3 Conventional Hobbing 3
4 Hobs for ANSI B92.1 Standard 45° P.A. Involute Splines 31
5 Hobs for ANSI B92.1 Standard 37.5° P.A. Involute Splines 31
6 Hobs for ANSI B92.1 Standard 30° P.A. Involute Splines 32
7 Flat Root Major Diameter Fit and Flat Root Side Fit 32

APPENDIX

A Conversion Tables from Inch to Millimeter 33

Copyright ASME International
Provided by IHS under license with ASME
No reproduction or networking permitted without license from IHS

Not for Resale

AMERICAN NATIONAL STANDARD

HOBS

1. SCOPE

1.1 This standard covers types, sizes, tolerances, marking and nomenclature for hobs of one-piece construction used for generating involute gears, involute splines, parallel side splines, involute serrations and roller chain sprockets.

2. PURPOSE

2.1 The purpose of this standard is to provide information on standard types, sizes, tolerances, marking and nomenclature of hobs to encourage uniformity in specifications.

3. DEFINITION OF A HOB

3.1 A hob is a rotary cutting tool with its teeth arranged along a helix, used for generating gear teeth or other evenly-spaced forms on the periphery of a cylindrical workpiece.

4. DESCRIPTION OF HOB TYPES COVERED

4.1 Hobs for Involute Gears. The information given applies to single and multiple thread hobs for cutting spur and helical gears. Full depth hob tooth profiles are straight except for a tip relief modification on coarse pitch hobs.

4.2 Hobs for Involute Splines. The information given applies to single thread hobs for cutting American Standard Involute Splines (B92.1).

4.3 Hobs for Involute Serrations. The information given applies to single thread hobs for cutting American Standard Involute Serrations. (B92.1)

4.4 Hobs for Parallel Side Splines. The information given applies to single thread hobs in two categories as regards tolerances.

(a) Those used for cutting splines where a close tolerance is specified for the spline key width on the test piece.

(b) Those used for cutting splines where a close tolerance is specified for the spline minor diameter on the test piece.

4.5 Hobs for Roller Chain Sprockets. The information given applies to single thread hobs for American Standard Roller Chain Sprockets, (B29.1-1963).

5. NOMENCLATURE

5.1 All the terms applicable to hob elements are defined and for clarity, many elements are identified in the drawings incorporated in this section. In addition, this nomenclature section includes definitions for those terms necessary to an understanding of the tolerance tables and also some definitions of terms closely related to the subject of hob geometry.

Nomenclature of Hob Elements and Other Terms Relating to Hobs

Adjacent Flute Spacing Variation. The variation from the desired angle between adjacent tooth faces measured in the plane of rotation.

Adjacent Thread Spacing Variation. The difference in the average variations obtained by traversing along the desired helical path of one thread, indexing and traversing in a similar manner on an adjacent thread.

Approach. See preferred term *tip relief modification.*

Arbor Collar. A hollow cylinder which fits an arbor, and is used to position the hob.

Axial Plane. A plane containing the axis of rotation.

Axial Pressure Angle. See definition under pressure angle.

Back-off. See preferred term *cam relief,* under *relief.*

Cam. The radial drop of the form in the angular distance between adjacent tooth faces.

Chamfer. A beveled surface to eliminate an otherwise sharp corner.

Copyright ASME International
Provided by IHS under license with ASME
No reproduction or networking permitted without license from IHS
Not for Resale

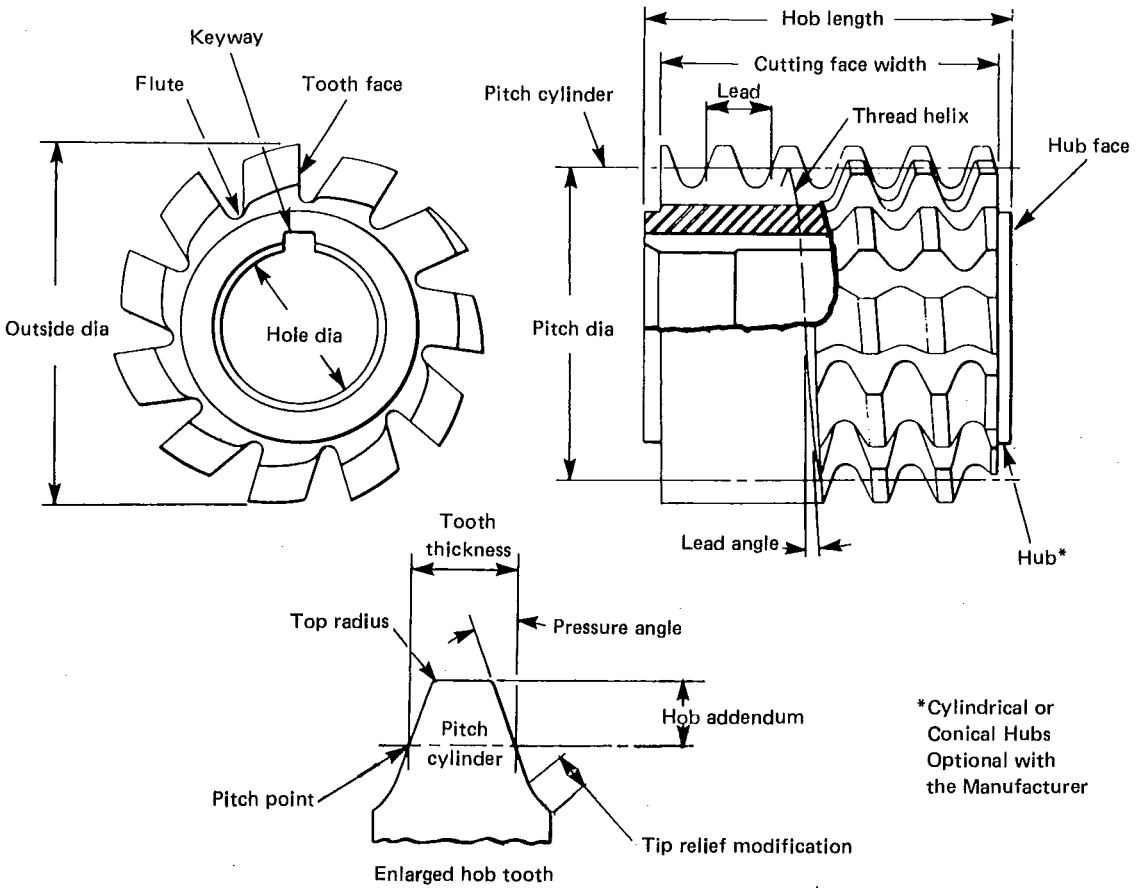

FIG. 1 ILLUSTRATION OF TERMS RELATING TO HOBS
(A typical right hand single thread gear hob is shown)

Climb Hobbing. Rotation of a hob in the opposite direction to the feed of the hob relative to the workpiece at the point of contact. (See Fig. 2).

Clutch Keyway. See term *keyway.*

Conventional Hobbing. Rotation of a hob in the same direction as the feed of the hob relative to the workpiece at the point of contact. (See Fig. 3).

Cutting Face Width. The axial length of the relieved portion of the hob. (See Fig. 1).

Cutting Speed. The peripheral lineal speed resulting from rotation, usually expressed as surface feet per minute (sfm).

Drawbar. A rod which retains an arbor, adapter or hob shank in the spindle.

Fillet

1. A curved line joining two lines to eliminate a sharp internal corner.

2. A curved surface joining two surfaces to eliminate a sharp internal corner.

Finishing Hob. One which will produce the workpiece tooth profile to final finished hobbed dimensions.

Flute. A longitudinal groove either straight or helical that forms the tooth face of one row of hob teeth and the backs of the preceding row. It also provides chip space. (See Fig. 1).

Flute Helix Angle. The angle which a helical tooth face makes with an axial plane, measured on the hob pitch cylinder.

Flute Lead. The axial advance of a helical tooth face in one turn around the axis of a hob.

Flute Lead Variation. The deviation of a hob tooth face from the desired helical surface.

Copyright ASME International
Provided by IHS under license with ASME
No reproduction or networking permitted without license from IHS

Not for Resale

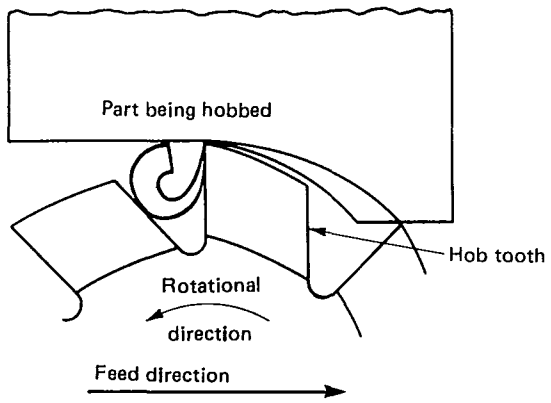

FIG. 2 CLIMB HOBBING

Full Top Radius. Continuous radius tangent to top and side cutting edges.

Generated Fillet. At the bottom of the hobbed form a fillet joining the root diameter with the desired generated form. This fillet is not a true radius.

Generated Fillet Height. On the hobbed workpiece, the radial distance from the root diameter to the point where the generated fillet joins the desired generated form.

Helical Flute Hob. One whose flutes are helical. The hand of the helix is usually opposite that of the hob thread and of such lead that the flutes are normal to the hob thread at the hob pitch diameter.

High Point. See preferred term *protuberance.*

Hob Addendum. Radial distance between the top of the hob tooth and the *pitch cylinder.*

Hob Arbor. A device to mount in or on the spindle of a hobbing machine, which is designed to carry and drive an arbor-type hob.

Job Dedendum. In topping hobs, the radial distance between the bottom of the hob tooth profile and the *pitch cylinder.*

Hob Length. Overall length of hob. (See Fig. 1)

Hob Runout. The runout of hob when mounted in a hobbing machine, measured radially on hub diameter, and axially on hub face.

Hub. A qualifying surface at each end of an arbor type hob which is provided for checking diameter and face runout. (See Fig. 1)

Hub Diameter Runout. The total variation in radial distance of the hub periphery from the axis.

Hub Face. The side surface of the *hub.* (See Fig. 1)

Hub Face Runout. The total axial variation of the hub face from a true plane of rotation.

Key. A mechanical member through which the turning force is transmitted to the hob.

Keyseat. The pocket, usually in the driving element, in which the key is retained.

Keyway. A slot through which the turning force is transmitted to the hob. May be either a longitudinal slot through the hole or a transverse slot across the hub face. If the latter, it is called a *clutch keyway.*

Lead. The axial advance of a thread for one complete turn, or convolution. (See Fig. 1)

Lead Angle. The angle between a tangent to a helix and a plane of rotation. In a hob, *lead angle* usually refers specifically to the angle of thread helix measured on the *pitch cylinder.* (See Fig. 1)

Lead Variation. The axial deviation of the hob teeth from the correct thread lead.

Left Hand Hob. One whose thread helix corresponds to that of a left hand screw.

Linear Pitch. See preferred term *axial pitch,* under *pitch.*

Linear Pressure Angle. See preferred term *axial pressure angle,* under *pressure angle.*

Lug. An extension of hob tooth profile above the nominal top cutting edge. Sometimes called *spurs* or *prongs.*

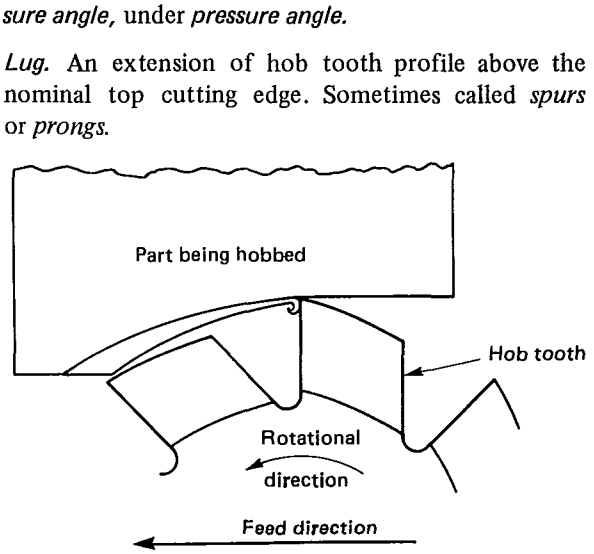

FIG. 3 CONVENTIONAL HOBBING

Copyright ASME International
Provided by IHS under license with ASME
No reproduction or networking permitted without license from IHS

Not for Resale

Multiple Thread Hob. One whose teeth are arranged along two or more parallel helical threads which are so spaced that the lead of the thread is equal to the axial pitch of the hob multiplied by the *number of threads.*

Non-adjacent Flute Spacing. The variation from the desired angle between any two non-adjacent tooth faces measured in the plane of rotation.

Non-topping Hob. One which produces only the sides and root diameter of the workpiece profile, but does not finish the outside diameter of the workpiece and does not produce an obvious chamfer at the tip of the workpiece form. Such a hob may produce a small amount of gear tooth tip modification.

Normal Circular Pitch. See definition under *pitch.*

Normal Module. The normal module of a gear equals the pitch diameter in millimeters divided by the number of teeth.

Normal Plane. A plane perpendicular to a pitch cylinder helix.

Normal Pressure Angle. See definition under *pressure angle.*

Number of Threads. In multiple thread hobs, the number of parallel helical paths along which hob teeth are arranged, sometimes referred to as *number of starts.*

Offset. See preferred term *rake offset.*

Outside Diameter. The diameter of the cylinder which contains the tops of the cutting edges of the hob teeth. (See Fig. 1).

Outside Diameter Runout. The total variation in the radial distance from the axis to the tops of the hob teeth.

Pilot End. On shank type hobs, a cylindrical or conical bearing surface opposite the driving end.

Pitch. The distance between corresponding, equally spaced hob *thread* elements along a given line or curve. The use of the single word *pitch* without qualification may be confusing. Specific terms such as *normal dimetral pitch, normal circular pitch,* or *axial pitch* are preferred.

Axial Pitch. The pitch parallel to the axis in an axial plane between corresponding elements of adjacent hob thread sections. The term Axial Pitch is preferred to the term Linear Pitch. (See Fig. 1 – Lead).

Linear Pitch. See preferred term *Axial Pitch.*

Normal Circular Pitch. The distance between corresponding elements on adjacent hob thread sections measured along a helix that is normal to the Thread Helix in the Pitch Cylinder.

Normal Diametral Pitch. (3.1416) divided by the Normal Circular Pitch.

Pitch Circle. A transverse section of the hob *pitch cylinder.* (See Fig. 1).

Pitch Cylinder. A reference cylinder in a hob from which design elements, such as lead, lead angle, and tooth thickness are derived. (See Fig. 1)

Pitch Diameter. The diameter of the *pitch cylinder.*

Pitch Point. The point at which a *tooth profile* intersects the *pitch cylinder.* (See Fig. 1).

Pre-Grind Hob. One which leaves a specified amount of stock on the sides, and sometimes the bottom, of the workpiece tooth profile to allow for final finishing by grinding. Such a hob may have a modified profile to distribute the stock left on the workpiece to best suit the grinding process used.

Pre-Shave Hob. One which leaves a small amount of stock on the sides of the workpiece tooth profile to allow for final finishing by shaving. Such a hob may have a modified tooth profile so that stock left on the workpiece is best distributed for finishing by shaving.

Pressure Angle. The angle between a tooth profile and a line perpendicular to the *pitch cylinder* at the *pitch point.* In hobs, the *pressure angle* is specified in the *normal plane* or in the *axial plane.*

Axial Pressure Angle. The Pressure Angle as measured in an Axial Plane. The term Axial Pressure Angle is preferred to the term Linear Pressure Angle.

Normal Pressure Angle. The Pressure Angle as measured in a Normal Plane.

Protuberance. A modification near the top of the hob tooth which produces *undercut* at the bottom of the tooth of the workpiece.

Rake. The angular relationship between the tooth face and a radial line intersecting the tooth face at the hob outside diameter, measured in a plane perpendicular to the axis.

Negative Rake. The condition wherein the peripheral cutting edge lags the tooth face in rotation.

Copyright ASME International
Provided by IHS under license with ASME
No reproduction or networking permitted without license from IHS

Not for Resale

Positive Rake. The condition wherein the peripheral cutting edge leads the tooth face in rotation.

Zero Rake. The condition wherein the tooth face coincides with a radial line.

Rake Offset. The distance between the tooth face and a radial line parallel to the tooth face. Used for checking rake.

Ramp. A modification at the bottom of the hob tooth which produces a chamfer at the top corners of the tooth of the workpiece.

Relief. The result of the removal of tool material behind or adjacent to a cutting edge to provide clearance and prevent rubbing (heel drag).

Cam Relief. The relief from the cutting edge to the back of the tooth produced by a cam actuated cutting tool or grinding tool or grinding wheel on a relieving (back-off) machine.

Side Relief. The relief provided at the sides of the teeth behind the cutting edges. The amount depends upon the radial cam, the axial cam, and the nature of the tooth profile.

Right Hand Hob. One whose thread helix corresponds to that of a right hand screw.

Roughing Hob. One which produces a workpiece tooth profile with *stock allowance* for a subsequent finishing operation.

Semi-Topping Hob. One which produces an obvious modification such as a chamfer or a radius at the intersection of the side of the workpiece profile with the workpiece outside diameter.

Setting Angle. The angle used for setting hob swivel to align the hob thread with the workpiece teeth.

Shank. That projecting portion of a hob which locates and drives the hob in the machine spindle or adapter.

Sharpening Guide. A cylindrical part with flutes, having the same lead as the hob flutes, sometimes used for guiding a hob along the correct lead when sharpening.

Short Lead. A design variation on some hobs wherein the hob lead is made shorter than the normal or theoretical lead, in order to generate lower on the workpiece, to meet a particular fillet or undercut requirement.

Side Relief. See definition under *relief.*

Single Thread Hob. One whose teeth are arranged along a single helical thread so that the lead of the thread is equal to the axial pitch of the hob.

Stock Allowance. The amount of a modification of the hob tooth to leave material on the workpiece tooth form for subsequent finishing.

Straight Flute Hob. One whose flutes are parallel to the hob axis.

Thread. A helical ridge, generally of constant form or profile. In a hob, unlike a worm or screw, the thread is not continuous and exists only at the cutting edges of the hob teeth. Therefore, it is sometimes referred to as the *thread envelope.*

Thread Envelope. See preferred term *thread.*

Thread Helix. The helix of the hob thread in the *pitch cylinder.* (See Fig. 1).

Tip Relief. A gear tooth modification in which a small amount of material is removed from the basic profile near the tip of the tooth.

Tip Relief Modification. A modification on the sides of the hob tooth near the bottom which produces tip relief on the gear tooth. Such modification is usually incorporated in full depth gear finishing hobs except in the finer pitches. (See Fig. 1).

Tooth. A projection on a hob which carries a cutting edge.

Tooth Face. The tooth surface against which the chips impinge. (See Fig. 1).

Tooth Profile. Outline or contour of hob tooth cutting edges.

Tooth Thickness. The actual width or thickness of the hob thread at the *pitch cylinder.* The use of the single term *tooth thickness* without qualification may be confusing. The specific terms *normal tooth thickness* and *axial tooth thickness* are preferred.

Axial Tooth Thickness. The tooth thickness as measured in an axial plane. (See Fig. 1).

Normal Tooth Thickness. The tooth thickness as measured along a helix normal to the thread helix.

Top Radius. Radius of the arc joining the top and a side cutting edge of a hob tooth. (See Fig. 1).

Topping Hob. One which produces the entire workpiece profile including the complete outside diameter of the workpiece.

Copyright ASME International
Provided by IHS under license with ASME
No reproduction or networking permitted without license from IHS
Not for Resale

Total Indicator Reading (TIR). See preferred term *total indicator variation (tiv).*

Total Indicator Variation (tiv). The difference between maximum and minimum indicator readings during a checking cycle.

Undercut. The condition at the base of a hobbed workpiece form wherein additional material beyond the basic form is removed. Under certain conditions this may occur naturally, while in other cases it may be produced by intentional modification of the hob tooth.

Wear Land. A cylindrical or flat land worn on the relieved portion of the hob tooth behind the cutting edge.

Whole Depth (WD). The radial depth (exclusive of the effect of lugs) which the hob is designed to produce on the workpiece.

Wobble. The motion of a hob when the radial runout varies along the hob length.

6. TABLES

6.1 Tables 1 through 9 give the sizes and dimensions by type of hob.

6.2 Tables 10 through 17 give the tolerances for hob elements by types of hob and by accuracy Class.

These standard Classes are:

Precision Ground:	Class AA Tolerance Class A Tolerance
Commercial Ground:	Class B Tolerance
Accurate Unground:	Class C Tolerance
Commercial Unground:	Class D Tolerance

6.3 Table 18 gives the standard marking symbols used on hobs.

6.4 Table 19 shows the dimensions for keyways for standard hobs.

Copyright ASME International
Provided by IHS under license with ASME
No reproduction or networking permitted without license from IHS

Not for Resale

Table 1 Single Thread Coarse Pitch Hob Sizes for Ground and Unground Hobs

(1—19.99 Normal Diametral Pitch)
For Spur and Helical Gears

Normal Diametral Pitch	Nominal Hole Diameter	Outside Diameter Minimum Recommended	Overall Length
1.00	2.500	10.75	15.00
	3.000	11.75	15.00
1.25	2.000	8.75	12.00
	2.500	9.75	12.00
1.50	2.000	8.00	10.00
	2.500	9.00	10.00
1.75	2.000	7.25	9.00
	2.500	8.25	9.00
2.00-2.24	1.500	5.75	8.00
	2.000	7.00	8.00
2.25-2.49	1.500	5.50	7.50
	2.000	6.50	7.50
2.50-2.74	1.500	5.00	7.00
	2.000	6.25	7.00
2.75-2.99	1.500	5.00	6.00
	2.000	6.00	6.00
3.00-3.49	1.250	4.50	5.00
	1.500	5.00	5.00
	2.000	5.75	5.75
3.50-3.99	1.250	4.25	4.75
	1.500	4.75	4.75
	2.000	5.50	5.50
4.00-4.99	1.250	4.00	4.00
	1.500	4.50	4.50
	2.000	5.25	5.25
5.00-6.99	1.250	3.50	3.50
	1.500	4.00	4.00
	2.000	4.75	4.75
7.00-7.99	1.250	3.25	3.25
	1.500	3.75	3.75
	2.000	4.50	4.50
8.00-11.99	1.250	3.00	3.00
	1.500	3.50	3.50
12.00-13.99	1.250	2.75	2.75
	.750	2.00	2.00
14.00-19.99	1.250	2.50	2.50
	.750	1.88	1.88

All dimensions in inches.

Table 2 Multiple Thread Coarse Pitch Hob Sizes for Ground and Unground Hobs

(2—19.99 Normal Diametral Pitch)
For Spur and Helical Gears

Normal Diametral Pitch	Number of Threads	Nominal Hole Diameter	Outside Diameter Minimum Recommended	Overall Length
2.00-2.49	2	1.500	6.50	8.00
		2.000	7.00	8.00
2.50-2.99	2	1.500	6.50	8.00
		2.000	6.50	8.00
3.00-3.99	2	1.500	5.50	5.50
		2.000	6.00	6.00
4.00-4.99	2 or 3	1.500	5.50	5.50
		2.000	5.50	5.50
5.00-6.99	2, 3 or 4	1.500	5.00	5.00
		2.000	5.00	5.00
7.00-7.99	2, 3 or 4	1.250	4.00	4.00
		1.500	4.00	4.00
		2.000	4.50	4.50
8.00-8.99	2, 3 or 4	1.250	3.75	3.75
		1.500	3.75	3.75
9.00-11.99	2, 3 or 4	1.250	3.50	3.50
		1.500	3.50	3.50
12.00-13.99	2, 3 or 4	1.250	3.25	3.25
14.00-15.99	2, 3 or 4	1.250	3.00	3.00
16.00-19,99	2, 3 or 4	1.250	2.75	2.75

All dimensions in inches.

Copyright ASME International
Provided by IHS under license with ASME
No reproduction or networking permitted without license from IHS

Not for Resale

Table 3 Single Thread Fine Pitch Hob Sizes for Ground and Unground Hobs

(20 Normal Diametral Pitch and Finer)
For Spur and Helical Gears

Normal Diametral Pitch	Nominal Hole Diameter	Outside Diameter Minimum Recommended	Overall Length
20-21.99	1.250	2.50	2.50
	.750	1.88	1.88
22-23.99	1.250	2.50	2.00
	.750	1.88	1.88
24-29.99	1.250	2.50	2.00
	.750	1.88	1.88
	.500	1.25	1.25
30-85.99	.750	1.88	1.50
	.500	1.12	1.12
	.394 (10 mm)	1.12	.75
	.315 (8 mm)	.75	.50
86-200	.750	1.62	.75
	.500	1.12	.75
	.394 (10 mm)	1.12	.75
	.315 (8 mm)	.75	.50

All dimensions in inches

Table 4 Multiple Thread Fine Pitch Hob Sizes for Ground and Unground Hobs

(20 Normal Diametral Pitch and Finer)
For Spur and Helical Gears

Diametral Pitch	Number of Threads	Nominal Hole Diameter	Outside Diameter Minimum Recommended	Overall Length
20-29.99	2, 3 or 4	1.250	2.50	2.50
30-50	2, 3 or 4	.750	1.88	1.50

All dimensions in inches

Table 5 Single Thread Combination Pitch Hob Sizes for Ground and Unground Hobs

(3/4 Thru 12/14 Pitch)
For Spur and Helical Gears

Combination Pitch[1]	Nominal Hole Diameter	Outside Diameter Minimum Recommended	Overall Length
3/4	1.250	4.00	4.00
4/5	1.250	3.50	3.50
5/7	1.250	3.25	3.25
6/8	1.250	3.00	3.00
7/9	1.250	3.00	3.00
8/10	1.250	3.00	3.00
9/11	1.250	2.75	2.75
10/12	1.250	2.75	2.75
	.750	2.00	2.00
12/14	1.250	2.50	2.50
	.750	2.00	2.00

NOTE 1: The numerator of the fraction denotes normal diametral pitch.
The denominator of the fraction denotes the diametral pitch for calculating addendum and whole depth.

All dimensions in inches.

Copyright ASME International
Provided by IHS under license with ASME
No reproduction or networking permitted without license from IHS

Not for Resale

Table 6 Single Thread Hob Sizes for Parallel Side Splines

Standard Sizes and Dimensions

SPLINE DATA			HOB SIZES		
No. of Teeth	Max. Dia.	Max. Depth for Hob*	Outside Diameter Minimum Recommended	Overall Length	Hole
4	1.50	0.000 thru 0.125	3.00	3.00	1.250
	1.62	0.126 thru 0.156	3.25	3.25	1.250
	1.75	0.157 thru 0.187	3.50	3.50	1.250
	2.00	0.188 thru 0.250	4.00	4.00	1.250
	2.25	0.251 thru 0.281	4.25	4.50	1.250
	2.50	0.282 thru 0.312	4.50	4.50	1.250
	3.00	0.313 thru 0.375	4.75	4.75	1.250
6	2.00	0.000 thru 0.125	2.75	2.75	1.250
	2.25	0.126 thru 0.156	3.00	3.00	1.250
	2.38	0.157 thru 0.187	3.25	3.25	1.250
	2.50	0.188 thru 0.250	3.50	3.50	1.250
	2.75	0.251 thru 0.281	3.75	3.75	1.250
	3.00	0.282 thru 0.312	4.00	4.00	1.250
8	2.75	0.000 thru 0.125	2.75	2.75	1.250
	3.00	0.126 thru 0.156	3.00	3.00	1.250
	3.25	0.157 thru 0.187	3.25	3.25	1.250
	3.38	0.188 thru 0.250	3.50	3.50	1.250
	3.50	0.251 thru 0.281	3.75	3.75	1.250
	3.75	0.282 thru 0.312	4.00	4.00	1.250
10	3.50	0.000 thru 0.125	2.75	2.75	1.250
	3.75	0.126 thru 0.156	3.00	3.00	1.250
	4.00	0.157 thru 0.187	3.25	3.25	1.250
	4.25	0.188 thru 0.250	3.50	3.50	1.250
	4.50	0.251 thru 0.281	3.75	3.75	1.250
	4.75	0.282 thru 0.312	4.00	4.00	1.250
12 and 16	—	0.000 thru 0.125	2.75	2.75	1.250
	—	0.126 thru 0.156	3.00	3.00	1.250
	—	0.157 thru 0.187	3.25	3.25	1.250
	—	0.188 thru 0.250	3.50	3.50	1.250
	—	0.251 thru 0.281	3.75	3.75	1.250
	—	0.282 thru 0.312	4.00	4.00	1.250

*Includes depth of clearance grooves produced by lugs on hob teeth. Hobs which are intended to clear a shoulder may require a larger diameter.

All dimensions in inches.

Copyright ASME International
Provided by IHS under license with ASME
No reproduction or networking permitted without license from IHS

Not for Resale

Table 7 Single Thread Hob Sizes for 30°, 37.5° and 45° P.A. Involute Splines

Standard Sizes and Dimensions

Diametral Pitch	Outside Diameter Minimum Recommended	Overall Length	Hole
2.5/5	4.00	4.50	1.250
3/6	4.00	4.00	1.250
4/8	3.50	3.50	1.250
5/10	3.00	3.00	1.250
6/12	3.00	3.00	1.250
8/16	2.75	2.75	1.250
10/20	2.50	2.50	1.250
	1.88	1.88	.750
12/24	2.50	2.00	1.250
	1.88	1.88	.750
16/32	2.50	2.00	1.250
	1.88	1.88	.750
20/40	2.50	2.00	1.250
	1.88	1.88	.750
28/48	2.50	2.00	1.250
	1.88	1.88	.750
32/64	1.88	1.50	.750
40/80	1.88	1.50	.750
48/96	1.88	1.50	.750
64/128	1.88	1.50	.750
80/160	1.88	1.50	.750
128/256	1.50	.75	.750

All dimensions in inches.

Table 8 Multiple Thread Hob Sizes for 30°, 37.5° and 45° P.A. Involute Splines

Standard Sizes and Dimensions

Diametral Pitch	Outside Diameter Minimum Recommended	Overall Length	Hole	Threads
2.5/5	5.50	5.50	1.500	2
3/6	5.00	5.00	1.500	2
4/8	4.00	4.00	1.250 or 1.500	2
5/10	3.50	3.50	1.250 or 1.500	2
6/12	3.50	3.50	1.250 or 1.500	2
	4.00	4.00	1.250 or 1.500	3
8/16	3.25	3.25	1.250 or 1.500	2
	3.75	3.75	1.250 or 1.500	3
10/20	3.00	3.00	1.250	2
	3.50	3.50	1.250 or 1.500	3
12/24	3.00	3.00	1.250	2
	3.50	3.50	1.250 or 1.500	3
16/32	2.75	2.75	1.250	2
	3.00	3.00	1.250	3
20/40	2.75	2.75	1.250	2
	3.00	3.00	1.250	3
24/48	2.75	2.75	1.250	2
	3.00	3.00	1.250	3
32/64	2.25	2.00	1.250	2
	2.50	2.00	1.250	3
40/80	2.25	2.00	1.250	2
	2.50	2.00	1.250	3
48/96	2.25	2.00	1.250	2
	2.50	2.00	1.250	3
64/128	2.25	1.50	1.250	2
	2.50	1.50	1.250	3
80/160	2.25	1.25	1.250	2
	2.50	1.25	1.250	3
128/256	1.75	1.00	.750	2
	2.00	1.00	.750	3

All dimensions in inches.

Copyright ASME International
Provided by IHS under license with ASME
No reproduction or networking permitted without license from IHS

Not for Resale

Table 9 Roller Chain Sprocket Hob Sizes Single Thread, for Chain Pitches, .250 thru 3.000

Based on sprocket profiles of American Standard B29.1 Transmission Roller Chains and Sprocket Teeth

Standard Sizes and Dimensions

CHAIN			HOB		
No.	Pitch	Roller Diameter	Outside Diameter Minimum Recommended	Overall Length	Hole
25	.250	0.130	2.50	2.50	1.250
35	.375	0.200	3.00	2.50	1.250
40	.500	0.313	3.12	2.50	1.250
50	.625	0.400	3.50	2.50	1.250
60	.750	0.469	3.50	2.88	1.250
80	1.000	0.625	4.25	3.50	1.250
100	1.250	0.750	4.75	4.50	1.250
120	1.500	0.875	5.25	5.25	1.500
140	1.750	1.000	5.50	6.00	1.500
160	2.000	1.125	6.88	6.75	2.000
180	2.250	1.406	8.00	8.00	2.000
200	2.500	1.563	8.50	8.50	2.000
240	3.000	1.875	8.75	11.00	2.000

Minimum Marking:

Chain Pitch
Lead Angle – L.A.
Flute Lead – F.L.
Type of Tooth
Roller Diameter

All dimensions in inches.

Copyright ASME International
Provided by IHS under license with ASME
No reproduction or networking permitted without license from IHS

Not for Resale

Table 10 Single Thread Coarse Pitch Gear Hob Tolerances[1]
(in ten thousandths of an inch)

Hob Element	CLASS	NORMAL DIAMETRAL PITCH[2]							
		1 Thru 1.99	2 Thru 2.99	3 Thru 3.99	4 Thru 4.99	5 Thru 5.99	6 Thru 8.99	9 Thru 12.99	13 Thru 19.99
RUNOUT[3]									
Hub Face	AA	—	—	2	2	2	1	1	1
	A	8	5	2	2	2	2	2	2
	B	10	8	4	4	3	3	2	2
	C	10	8	4	4	3	3	2	2
	D	10	8	5	5	4	4	3	3
Hub Diameter	AA	—	—	2	2	2	1	1	1
	A	10	5	4	3	3	3	2	2
	B	12	8	6	5	4	4	3	2
	C	12	8	6	5	4	4	3	2
	D	15	10	8	8	6	6	5	5
Outside Diameter	AA	—	—	5	4	3	3	3	3
	A	30	20	15	15	10	10	10	10
	B	40	30	25	20	15	15	15	10
	C	50	45	40	25	20	17	17	12
	D	60	55	50	45	35	35	30	25
LEAD[3]									
Tooth to Tooth	AA	—	—	4	3	2	1.7	1.7	1.7
	A	7	5	4	3	2	2	2	2
	B	10	8	6	4	3	3	3	3
	C	15	12	8	6	5	4	4	4
	D	25	20	16	14	12	10	10	8
In Any One Turn of Helix	AA	—	—	8	6	4	3	3	2
	A	25	18	10	8	6	5	5	4
	B	35	25	17	11	9	7	7	6
	C	45	35	22	14	11	9	9	8
	D	60	50	40	30	25	20	20	18
In Any Three Turns of Helix	AA	—	—	12	9	6	5	5	4
	A	38	26	15	12	9	8	8	7
	B	53	38	22	16	12	11	10	9
	C	70	50	30	21	16	14	13	12
	D	120	100	80	60	50	40	35	25
TOOTH									
Pressure Angle[3,4]	AA	—	—	2	2	1.7	1.7	1.7	1.7
	A	10	5	3	3	2	2	2	2
	B	16	8	5	5	4	3	3	3
	C	25	15	10	5	4	3	3	3
	D	80	55	30	18	12	8	8	6
Thickness (minus only)	AA	—	—	15	15	10	10	10	10
	A	30	20	15	15	10	10	10	10
	B	30	20	15	15	10	10	10	10
	C	35	25	20	20	15	15	15	15
	D	40	35	30	25	20	20	20	20
Start of Tip Relief Modification (plus or minus)	AA	—	—	100	80	70	60	60	40
	A	200	180	160	140	120	100	80	60
	B	220	200	180	160	140	120	100	80
	C	220	200	180	160	140	120	100	80
	D	260	240	220	200	180	160	140	120

Continued on Page 13

Copyright ASME International
Provided by IHS under license with ASME
No reproduction or networking permitted without license from IHS

Not for Resale

Table 10 Single Thread Coarse Pitch Gear Hob Tolerances[1] (Continued)
(in ten thousandths of an inch)

Hob Element	CLASS	NORMAL DIAMETRAL PITCH[2]							
		1 Thru 1.99	2 Thru 2.99	3 Thru 3.99	4 Thru 4.99	5 Thru 5.99	6 Thru 8.99	9 Thru 12.99	13 Thru 19.99
TOOTH (Continued)									
Symmetry in Start of Tip Relief Modification	AA	—	—	70	60	50	40	40	25
	A	150	130	120	100	90	80	60	50
	B	180	150	130	120	100	90	80	70
	C	180	150	130	120	100	90	80	70
	D	200	180	160	140	120	110	100	90
FLUTES									
Adjacent Flute Spacing[5]	AA	—	—	20	15	10	8	8	6
	A	40	30	25	20	15	10	10	10
	B	50	45	40	30	20	15	15	10
	C	50	45	40	30	20	15	15	10
	D	60	60	50	50	30	25	25	20
Non-Adjacent Flute Spacing[5]	AA	—	—	40	35	25	15	15	15
	A	80	60	50	40	30	30	30	25
	B	100	90	80	60	50	50	50	40
	C	100	90	80	60	50	50	50	40
	D	120	120	100	100	80	80	70	60
Rake To Cutting Depth[6]	AA	—	—	10	8	6	5	5	3
	A	30	15	10	8	6	5	5	3
	B	50	25	15	10	8	7	7	5
	C	50	25	15	10	8	7	7	5
	D	100	75	50	40	30	20	20	15

Flute Lead Over Cutting Face Width		CUTTING FACE WIDTH in inches				
		Up Thru 1	Over 1 Thru 2	Over 2 Thru 4	Over 4 Thru 7	Over 7
	AA	8	10	15	20	20
	A	10	15	25	30	50
	B	10	15	25	30	50
	C	10	15	25	30	50
	D	15	23	38	45	75

HOLE		HOLE DIAMETER in inches					
		2.500	2.000	1.500	1.250	0.750	0.500 & Smaller
Hole Diameter (plus only)	AA	—	—	—	2	2	2
	A	8	8	5	2	2	2
	B	10	10	8	3	2	2
	C	10	10	8	3	2	2
	D	10	10	8	5	4	3

NOTE:
1. Except for LEAD, these tolerances apply for all hob diameters. For hob diameters larger than those recommended for the smallest diameter for each pitch listed, the LEAD tolerances shall be increased by a factor of one-half of the percent oversize.
2. For combination pitch hobs, the coarser of the two pitches shall apply.
3. Total indicator variation.
4. Exclusive of Tip Relief Modification.
5. Compared against master index plate.
6. Radial (zero rake) tooth faces are standard.

Copyright ASME International
Provided by IHS under license with ASME
No reproduction or networking permitted without license from IHS
Not for Resale

Table 11 Multiple Thread Coarse Pitch Gear Hob Tolerances[1]

(In ten thousandths of an inch)

Hob Elements	CLASS	NORMAL DIAMETRAL PITCH[2]							
		1 Thru 1.99	2 Thru 2.99	3 Thru 3.99	4 Thru 4.99	5 Thru 5.99	6 Thru 8.99	9 Thru 12.99	13 Thru 19.99
RUNOUT[3]									
Hub Face	A	8	5	2	2	2	2	2	2
	B	10	8	4	4	3	3	2	2
	C	10	8	4	4	3	3	2	2
	D	10	8	5	5	4	4	3	3
Hub Diameter	A	10	5	4	3	3	3	2	2
	B	12	8	6	5	4	4	3	2
	C	12	8	6	5	4	4	3	2
	C	15	10	8	8	6	6	5	5
Outside Diameter	A	30	20	15	15	10	10	10	10
	B	40	30	25	20	15	15	15	10
	C	50	45	40	25	20	17	17	12
	D	60	55	50	45	35	35	30	25
LEAD[3]									
In One Axial Pitch	A	25	20	10	8	6	5	5	4
	B	35	30	17	12	10	8	8	7
	C	45	35	22	18	15	12	12	10
	D	60	50	40	30	25	20	20	18
In Three Axial Pitches	A	38	30	15	12	9	8	8	7
	B	53	38	22	20	15	12	12	10
	C	70	50	30	28	20	18	16	14
	D	120	100	80	60	50	40	35	25
Tooth to Tooth 2 Thread Hob	A	8	6	5	4	3	3	3	3
	B	12	10	7	6	5	5	5	4
	C	18	14	10	9	7	6	6	5
	D	27	22	18	16	14	12	11	9
Tooth to Tooth 3 Thread Hob	A	9	7	6	4	4	4	3	3
	B	14	12	8	7	6	6	5	5
	C	21	16	12	10	8	7	6	5
	D	29	24	20	18	16	14	12	10
Tooth to Tooth 4 Thread Hob	A	10	7	6	5	4	4	4	3
	B	16	13	9	8	7	6	6	5
	C	24	18	13	11	9	7	7	6
	D	31	26	22	20	18	16	13	11
ADJACENT THREAD SPACING									
2 Thread Hob	A	11	9	8	7	6	5	4	3
	B	14	12	11	10	9	8	6	5
	C	20	17	15	13	11	10	9	8
	D	26	22	19	17	15	13	12	11
3 Thread Hob	A	13	11	10	8	7	6	5	4
	B	16	14	12	11	10	9	7	6
	C	22	19	16	14	13	11	10	9
	D	28	24	20	18	16	15	13	12
4 Thread Hob	A	15	13	12	9	8	7	6	5
	B	18	16	14	12	11	10	8	7
	C	24	21	18	15	14	12	11	10
	D	30	26	22	20	18	16	14	13

Continued on Page 15

Copyright ASME International
Provided by IHS under license with ASME
No reproduction or networking permitted without license from IHS

Not for Resale

Table 11 Multiple Thread Coarse Pitch Gear Hob Tolerances[1] (Continued)

(In ten thousands of an inch)

Hob Elements	CLASS	NORMAL DIAMETRAL PITCH[2]							
		1 Thru 1.99	2 Thru 2.99	3 Thru 3.99	4 Thru 4.99	5 Thru 5.99	6 Thru 8.99	9 Thru 12.99	13 Thru 19.99
TOOTH									
Pressure Angle[3, 4] 2 Thread Hob	A	12	7	5	4	3	3	2	2
	B	18	10	7	5	5	4	3	3
	C	27	16	11	7	5	4	3	3
	D	80	55	30	18	12	8	8	7
Pressure Angle[3, 4] 3 Thread Hob	A	15	8	5	4	3	3	3	2
	B	20	10	7	5	5	4	4	3
	C	27	16	11	7	5	4	4	3
	D	80	55	30	18	12	8	8	7
Pressure Angle [3, 4] 4 Thread Hob	A	15	8	5	4	3	3	3	2
	B	20	10	7	5	5	4	4	3
	C	27	16	11	7	5	4	4	3
	D	80	55	30	18	12	8	8	7
Thickness (minus only)	A	30	20	15	15	10	10	10	10
	B	30	20	15	15	10	10	10	10
	C	35	25	20	20	15	15	15	15
	D	40	35	30	25	20	20	20	20
Start of Tip Relief Modification (plus or minus)	A	200	180	160	140	120	100	80	60
	B	220	200	180	160	140	120	100	80
	C	220	200	180	160	140	120	100	80
	D	260	240	220	200	180	160	140	120
Symmetry in Start of Tip Relief Modification	A	150	130	120	100	90	80	60	50
	B	180	150	130	120	100	90	80	70
	C	180	150	130	120	100	90	80	70
	D	200	180	160	140	120	110	100	90

Continued on Page 16

NOTE:

1. Except for LEAD and ADJACENT THREAD SPACING, These tolerances apply for all hob diameters. For hob diameters larger than those recommended for the smallest diameter for each pitch listed, the LEAD tolerances shall be increased by a factor of one-half of the percent oversize.
2. For combination pitch hobs, the coarser of the two pitches shall apply.
3. Total indicator variation.
4. Exclusive of Tip Relief Modification.

Copyright ASME International
Provided by IHS under license with ASME
No reproduction or networking permitted without license from IHS

Not for Resale

Table 11 Multiple Thread Coarse Pitch Gear Hob Tolerances (Continued)

(In ten thousandths of an inch)

Hob Elements	CLASS	NORMAL DIAMETRAL PITCH							
		1 Thru 1.99	2 Thru 2.99	3 Thru 3.99	4 Thru 4.99	5 Thru 5.99	6 Thru 8.99	9 Thru 12.99	13 Thru 19.99
FLUTES									
Adjacent Flute Spacing[5]	A	40	30	25	20	15	10	10	10
	B	50	45	40	30	20	15	15	10
	C	50	45	40	30	20	15	15	10
	D	60	60	50	50	30	25	25	20
Non-Adjacent Flute Spacing[5]	A	80	60	50	40	30	30	30	25
	B	100	90	80	60	50	50	50	40
	C	100	90	80	60	50	50	50	40
	D	120	120	100	100	80	80	70	60
Rake to Cutting Depth[6]	A	30	15	10	8	6	5	5	3
	B	50	25	15	10	8	7	7	5
	C	50	25	15	10	8	7	7	5
	D	100	75	50	40	30	20	20	15

Flute Lead Over Cutting Face Width		CUTTING FACE WIDTH in inches				
		Up Thru 1	Over 1 Thru 2	Over 2 Thru 4	Over 4 Thru 7	Over 7
	A	10	15	25	30	50
	B	10	15	25	30	50
	C	10	15	25	30	50
	D	15	23	38	45	75

HOLE		HOLE DIAMETER in inches					
		2.500	2.000	1.500	1250	0.750	0.500 & Smaller
Hole Diameter (plus only)	A	8	8	5	2	2	2
	B	10	10	8	3	2	2
	C	10	10	8	3	2	2
	D	10	10	8	5	4	3

NOTE:

1. Except for LEAD AND ADJACENT THREAD SPACING, These tolerances apply for all hob diameters. For hob diameters larger than those recommended for the smallest diameter for each pitch listed, the LEAD tolerances shall be increased by a factor of one-half of the percent oversize.
2. For combination pitch hobs, the coarser of the two pitches shall apply.
3. Total indicator variation.
4. Exclusive of Tip Relief Modification.
5. Compared against master index plate.
6. Radial (zero rake) tooth faces are standard.

Copyright ASME International
Provided by IHS under license with ASME
No reproduction or networking permitted without license from IHS

Not for Resale

Copyright ASME International
Provided by IHS under license with ASME
No reproduction or networking permitted without license from IHS

Table 12 Single Thread Fine Pitch Gear Hob Tolerances[1]

(In ten thousandths of an inch)

Hob Element	Class	NORMAL DIAMETRAL PITCH[2] 20 Thru 29.99	30 Thru 50.99	51 and Finer
RUNOUT[3]				
Hub Face	AA	1	1	1
	A	2	2	2
	B	2	2	–
	C	2	2	2
	D	3	3	–
Hub Diameter	AA	1	1	1
	A	2	2	2
	B	2	2	–
	C	2	2	2
	D	4	3	–
Outside Diameter	AA	2	2	2
	A	10	7	5
	B	10	7	–
	C	12	10	8
	D	20	15	–
LEAD[3]				
Tooth to Tooth	AA	1.7	1.5	1.5
	A	2	2	2
	B	3	2	–
	C	4	3	3
	D	6	5	–
In Any One Turn of Helix	AA	2	1.5	1.5
	A	4	3	3
	B	6	4	–
	C	8	8	6
	D	16	14	–
In Any Three Turns of Helix	AA	4	3	3
	A	7	5	5
	B	9	7	–
	C	12	12	8
	D	20	16	–

Table 12 Single Thread Fine Pitch Gear Hob Tolerances[1]

(In ten thousandths of an inch)

Hob Element	Class	NORMAL DIAMETRAL PITCH[2] 20 Thru 29.99	30 Thru 50.99	51 and Finer
TOOTH				
Pressure Angle[3,4]	AA	1.7	1.5	1.5
	A	2	2	2
	B	3	2	–
	C	3	3	3
	D	5	4	–
Thickness (minus only)	AA	10	5	5
	A	10	5	5
	B	10	5	–
	C	15	10	10
	D	20	15	–
Start of Tip Relief Modification (plus or minus)	AA	40	30	–
	A	40	30	–
	B	50	40	–
	C	60	50	–
	D	100	80	–
Symmetry in Start of Tip Relief Modification	AA	25	25	–
	A	35	25	–
	B	45	35	–
	C	55	45	–
	D	80	60	–

Continued on Page 18

Not for Resale

Table 12 Single Thread Fine Pitch Gear Hob Tolerances[1] (Continued)

(In ten thousandths of an inch)

Hob Element	Class	NORMAL DIAMETRAL PITCH[2]		
		20 Thru 29.99	30 Thru 50.99	51 and Finer
FLUTES				
Adjacent Flute Spacing[5]	AA	6	6	6
	A	10	10	10
	B	10	10	—
	C	10	10	10
	D	17	17	—
Non-Adjacent Flute Spacing[5]	AA	15	15	15
	A	25	20	20
	B	35	30	—
	C	35	30	30
	D	50	40	—
Rake to Cutting Depth[6]	AA	3	3	3
	A	3	3	3
	B	5	5	—
	C	5	5	5
	D	15	10	—
		CUTTING FACE WIDTH in inches		
		Up Thru 1	**Over 1 Thru 2**	**Over 2 Thru 4**
Flute Lead Over Cutting Face Width	AA	8	10	15
	A	10	15	25
	B	10	15	25
	C	10	15	25
	D	15	23	38
HOLE		**HOLE DIAMETER in inches**		
		1.250	**0.750**	**0.500 and Smaller**
Hole Diameter (plus only)	AA	2	2	2
	A	2	2	2
	B	3	2	2
	C	3	2	2
	D	5	4	3

NOTE:

1. Except for LEAD, these tolerances apply for all hob diameters. For hob diameters larger than those recommended for standard hobs, the LEAD tolerances shall be increased by a factor of one-half of the percent oversize.
2. For combination pitch hobs, the coarser of the two pitches shall apply.
3. Total indicator variation.
4. Exclusive of Tip Relief Modification.
5. Compared against master index plate.
6. Radial (zero rake) tooth faces are standard.

Copyright ASME International
Provided by IHS under license with ASME
No reproduction or networking permitted without license from IHS

Not for Resale

Table 13 Multiple Thread Fine Pitch Gear Hob Tolerances[1]

(In ten thousandths of an inch)

Hob Element	Class	NORMAL DIAMETRAL PITCH[2]	
		20 Thru 29.99	30 Thru 50.99
RUNOUT[3]			
Hub Face	A	2	2
	B	2	2
	C	2	2
Hub Diameter	A	2	2
	B	2	2
	C	2	2
Outside Diameter	A	10	7
	B	10	7
	C	12	10
LEAD[3]			
In One Axial Pitch	A	4	3
	B	7	4
	C	10	8
In Three Axial Pitches	A	7	5
	B	10	7
	C	14	12
Tooth to Tooth 2 Thread Hob	A	2	2
	B	3	2
	C	5	3
Tooth to Tooth 3 Thread Hob	A	3	2
	B	4	3
	C	5	4
Tooth to Tooth 4 Thread Hob	A	3	3
	B	4	4
	C	5	4
ADJACENT THREAD SPACING			
2 Thread Hob	A	3	3
	B	5	5
	C	7	6
3 Thread Hob	A	4	4
	B	6	6
	C	8	7
4 Thread Hob	A	4	4
	B	7	6
	C	9	8

Continued on Page 20

Copyright ASME International
Provided by IHS under license with ASME
No reproduction or networking permitted without license from IHS

Not for Resale

Copyright ASME International
Provided by IHS under license with ASME
No reproduction or networking permitted without license from IHS

Table 13 Multiple Thread Fine Pitch Gear Hob Tolerances[1] (Continued)

(In ten thousandths of an inch)

Hob Element	Class	NORMAL DIAMETRAL PITCH[2] 20 Thru 29.99	NORMAL DIAMETRAL PITCH[2] 30 Thru 50.99
TOOTH			
Pressure Angle[3,4] 2 Thread Hob	A	2	2
	B	3	2
	C	3	3
Pressure Angle[3,4] 3 Thread Hob	A	2	2
	B	3	2
	C	3	3
Pressure Angle[3,4] 4 Thread Hob	A	2	2
	B	3	2
	C	3	3
Thickness (minus only)	A	10	5
	B	10	5
	C	15	10
Start of Tip Relief Modification (plus or minus)	A	50	40
	B	60	50
	C	60	50
Symmetry in Start of Tip Relief Modification	A	40	30
	B	60	50
	C	60	50

NOTE:

1. Except for LEAD and ADJACENT THREAD SPACING, these tolerances apply for all hob diameters. For hob diameters larger than those recommended for standard hobs, the LEAD and ADJACENT THREAD SPACING tolerances shall be increased by a factor of one-half of the percent oversize.
2. For combination pitch hobs, the coarser of the two pitches shall apply.

Table 13 Multiple Thread Fine Pitch Gear Hob Tolerances[1] (Continued)

(In ten thousandths of an inch)

Hob Element	Class	NORMAL DIAMETRAL PITCH[2] 20 Thru 29.99	NORMAL DIAMETRAL PITCH[2] 30 Thru 50.99
FLUTES			
Adjacent Flute Spacing[5]	A	10	10
	B	10	10
	C	10	10
Non-Adjacent Flute Spacing[5]	A	25	20
	B	35	30
	C	35	30
Rake to Cutting Depth[6]	A	3	3
	B	5	5
	C	5	5
		CUTTING FACE WIDTH in inches	
		Up Thru 1	**Over 1 Thru 2** / **Over 2 Thru 4**
Flute Lead Over Cutting Face Width	A	10	15 / 25
	B	10	15 / 25
	C	10	15 / 25
		HOLE DIAMETER in inches	
		1.250	**0.750** / **0.500 and Smaller**
HOLE			
Hole Diameter (plus only)	A	2	2 / 2
	B	3	2 / 2
	C	3	2 / 2

3. Total indicator variation.
4. Exclusive of Tip Relief Modification.
5. Compared against master index plate.
6. Radial (zero rake) tooth faces are standard.

Not for Resale

Table 14 (Part A) Single Thread Hobs for Parallel Side Splines

Spline Tooth Thickness Held

Tolerances for Hob Manufacturers Test Cuts

Total Spline Element Tolerances
(Ten Thousandths of An Inch)

Number Of Teeth	Class	Spline Element	Major Diameter of Splines in inches				
			Up Thru 1.399	1.400 Thru 2.399	2.400 Thru 3.399	3.400 Thru 4.399	4.400 Thru 6.000
6	A	Tooth Thickness	7	8	10		
		Minor Dia	30	40	50		
	C	Tooth Thickness	10	10	15		
		Minor Dia	40	50	60		
	D	Tooth Thickness	15	20	25		
		Minor Dia	60	70	80		
10	A	Tooth Thickness	7	8	10	15	
		Minor Dia	40	50	60	70	
	C	Tooth Thickness	10	10	15	20	
		Minor Dia	50	60	70	80	
	D	Tooth Thickness	15	20	25	30	
		Minor Dia	80	90	100	110	
16	A	Tooth Thickness	7	8	10	15	20
		Minor Dia	50	60	70	80	90
	C	Tooth Thickness	10	10	15	20	25
		Minor Dia	60	70	80	100	120
	D	Tooth Thickness	15	20	25	30	35
		Minor Dia	100	110	120	140	150

Class A — Precision Ground

Class C — Accurate Unground

Class D — Commercial Unground

Copyright ASME International
Provided by IHS under license with ASME
No reproduction or networking permitted without license from IHS

Not for Resale

Table 14 (Part B) Single Thread Hobs for Parallel Side Splines (Continued)

Spline Tooth Thickness Held

Tolerances for Hob Manufacturers Test Cuts

Total Spline Element Tolerances
(Ten Thousandths of An Inch)

Number Of Teeth	Class	Spline Element	Major Diameter of Splines in inches				
			Up Thru 1.399	1.400 Thru 2.399	2.400 Thru 3.399	3.400 Thru 4.399	4.400 Thru 6.000
6	A	Tooth Thickness	10	15	20		
		Minor Dia	15	15	20		
	C	Tooth Thickness	15	20	25		
		Minor Dia	20	20	30		
	D	Tooth Thickness	20	25	35		
		Minor Dia	30	30	40		
10	A	Tooth Thickness	10	15	20	25	
		Minor Dia	15	15	20	30	
	C	Tooth Thickness	15	20	25	30	
		Minor Dia	20	20	30	40	
	D	Tooth Thickness	20	25	35	40	
		Minor Dia	30	30	40	50	

Class A — Precision Ground

Class C — Accurate Unground

Class D — Commercial Unground

Table 14 (Part C) Tolerances for Hob Manufacturers Test Cuts

Maximum Undercut (per side)

(In Ten Thousandths of an Inch)

Hob Class	Spline Depth (exclusive of fillet or clearance grooves) in inches					
	0.000 Thru 0.100	0.101 Thru 0.200	0.201 Thru 0.300	0.301 Thru 0.400	0.401 Thru 0.500	0.501 Thru 0.600
A	8	11	14	16	18	20
C	10	13	16	19	22	25
D	15	18	21	24	27	30

Minimum undercut is zero

Copyright ASME International
Provided by IHS under license with ASME
No reproduction or networking permitted without license from IHS

Not for Resale

Table 15 Single Thread Hob Tolerances[1] For 30° P.A. Involute Splines

(In Ten Thousandths of an Inch)

Hob Element	CLASS	NORMAL DIAMETRAL PITCH										
		2.5/5	3/6	4/8	5/10	6/12	8/16	10/20	12/24	16/32	20/40 24/48	32/64 48/96
RUNOUT[2]												
Hub Face	AA	—	—	—	—	1	1	1	1	1	1	1
	A	2	2	2	2	2	2	2	2	2	2	2
	B	4	4	3	3	3	2	2	2	2	2	2
	C	4	4	3	3	3	2	2	2	2	2	2
	D	5	5	4	4	4	3	3	3	3	—	—
Hub Diameter	AA	—	—	—	—	2	1	1	1	1	1	1
	A	3	3	3	3	3	2	2	2	2	2	2
	B	5	5	4	4	4	3	2	2	2	2	2
	C	5	5	4	4	4	3	2	2	2	2	2
	D	8	8	6	6	6	5	5	5	5	—	—
Outside Diameter	AA	—	—	—	—	5	5	5	5	5	5	4
	A	15	15	10	10	10	10	10	10	10	10	7
	B	20	20	15	15	15	15	10	10	10	10	7
	C	25	25	20	17	17	17	12	12	12	12	10
	D	45	45	35	35	35	30	25	25	25	—	—
LEAD[2]												
Tooth to Tooth	AA	—	—	—	—	1.7	1.7	1.7	1.7	1.7	1.7	1.7
	A	5	4	3	2	2	2	2	2	2	2	2
	B	8	6	4	3	3	3	3	3	3	3	2
	C	12	8	6	5	4	4	4	4	4	4	3
	D	20	16	14	12	10	10	10	10	8	—	—
In Any One Turn of Helix	AA	—	—	—	—	6	6	6	6	5	5	3
	A	22	13	10	8	7	7	7	7	6	6	4
	B	29	22	14	12	10	10	9	9	8	8	5
	C	40	27	18	15	12	12	12	12	11	11	11
	D	60	50	37	32	27	26	25	25	23	—	—
TOOTH												
Pressure Angle[2]	AA	—	—	—	—	1.7	1.7	1.7	1.7	1.7	1.7	1.7
	A	2	2	2	2	2	2	2	2	2	2	2
	B	4	3	3	3	3	3	3	3	2	2	2
	C	4	3	3	3	3	3	3	3	3	3	3
	D	12	8	8	8	8	6	5	5	4	—	—
Thickness (Minus Only)	AA	—	—	—	—	10	10	10	10	10	10	5
	A	20	15	15	10	10	10	10	10	10	10	5
	B	20	15	15	10	10	10	10	10	10	10	5
	C	25	20	20	15	15	15	15	15	15	15	10
	D	35	30	25	20	20	20	20	20	20	—	—

Continued on Page 24

Copyright ASME International
Provided by IHS under license with ASME
No reproduction or networking permitted without license from IHS

Not for Resale

Table 15 Single Thread Hob Tolerances[1] For 30° P.A. Involute Splines (Continued)

(In Ten Thousandths of an Inch)

Hob Element	CLASS	NORMAL DIAMETRAL PITCH										
		2.5/5	3/6	4/8	5/10	6/12	8/16	10/20	12/24	16/32	20/40 24/48	32/64 48/96
FLUTES												
Adjacent Flute Spacing[3]	AA	—	—	—	—	8	8	8	8	6	6	6
	A	20	20	15	10	10	10	10	10	10	10	10
	B	30	30	20	15	15	15	10	10	10	10	10
	C	30	30	20	15	15	15	10	10	10	10	10
	D	50	50	30	25	25	25	20	20	20	17	17
Non-Adjacent Flute Spacing[3]	AA	—	—	—	—	15	15	15	15	15	15	15
	A	40	40	30	30	30	30	25	25	25	25	20
	B	60	60	50	50	50	50	40	40	40	35	30
	C	60	60	50	50	50	50	40	40	40	35	30
	D	100	100	80	80	80	70	60	60	60	50	40
Rake to Cutting Depth[4]	AA	—	—	—	—	5	3	3	3	3	3	3
	A	6	5	5	5	5	3	3	3	3	3	3
	B	8	7	7	7	7	5	5	5	5	5	5
	C	8	7	7	7	7	5	5	5	5	5	5
	D	30	20	20	20	20	15	15	10	10	10	10

		CUTTING FACE WIDTH in inches			
		Up Thru 1	Over 1 Thru 2	Over 2 Thru 4	Over 4 Thru 7
Flute Lead Over Cutting Face Width	AA	10	15	25	—
	A	10	15	25	30
	B	10	15	25	30
	C	10	15	25	30
	D	15	23	38	45

HOLE		HOLE DIAMETER in inches		
		1.250	0.750	0.500 and Smaller
Hole Diameter Plus Only	AA	2	2	2
	A	2	2	2
	B	3	2	2
	C	3	2	2
	D	5	4	3

NOTE:

1. Except for LEAD, these tolerances apply for all hob diameters. For hob diameters larger than those recommended for standard hobs, the LEAD tolerances shall be increased by a factor of one-half of the percent oversize.
2. Total indicator variation.
3. Compared against master index plate.
4. Radial (zero rake) tooth faces are standard.

See Figure 6 for Basic Hob Tooth Form (Page 32)

Copyright ASME International
Provided by IHS under license with ASME
No reproduction or networking permitted without license from IHS

Not for Resale

Table 16 Multiple Thread Hob Tolerances[1] For 30° P.A. Involute Splines

(In Ten Thousandths of an Inch)

Hob Element	CLASS	NORMAL DIAMETRAL PITCH										
		2.5/5	3/6	4/8	5/10	6/12	8/16	10/20	12/24	16/32	20/40 24/48	32/64 48/96
RUNOUT[2]												
Hub Face	AA	—	—	—	—	1	1	1	1	1	1	1
	A	2	2	2	2	2	2	2	2	2	2	2
	B	4	4	3	3	3	2	2	2	2	2	2
	C	4	4	3	3	3	2	2	2	2	2	2
	D	5	5	4	4	4	3	3	3	3	—	—
Hub Diameter	AA	—	—	—	—	2	1	1	1	1	1	1
	A	3	3	3	3	3	2	2	2	2	2	2
	B	5	5	4	4	4	3	2	2	2	2	2
	C	5	5	4	4	4	3	2	2	2	2	2
	D	8	8	6	6	6	5	5	5	5	—	—
Outside Diameter	AA	—	—	—	—	5	5	5	5	5	5	4
	A	15	15	10	10	10	10	10	10	10	10	7
	B	20	20	15	15	15	15	10	10	10	10	7
	C	25	25	20	17	17	17	12	12	12	12	10
	D	45	45	35	35	35	30	25	25	25	—	—
LEAD[2]												
In One Axial Pitch	AA	—	—	—	—	6	6	6	6	5	5	3
	A	22	13	10	8	7	7	7	7	6	6	4
	B	29	22	14	12	10	10	9	9	8	8	5
	C	40	27	18	15	12	12	12	12	11	11	11
	D	60	50	37	32	27	26	25	25	23	—	—
In Three Axial Pitches	AA	—	—	—	—	9	9	9	9	8	8	5
	A	33	20	15	12	10	10	10	10	8	8	6
	B	40	30	20	17	14	14	12	12	11	11	7
	C	56	37	25	21	17	17	17	17	15	15	15
	D	84	70	51	45	38	36	35	35	32	—	—
Tooth to Tooth 2 Thread Hob	AA	—	—	—	—	2	2	2	2	2	2	2
	A	6	5	4	3	3	3	3	3	3	3	3
	B	8	7	5	4	4	4	4	4	4	4	3
	C	13	8	7	6	5	5	5	5	5	5	4
	D	21	17	15	13	11	11	11	11	9	—	—
Tooth to Tooth 3 Thread Hob	AA	—	—	—	—	3	3	3	3	3	2	2
	A	7	6	5	4	4	4	4	4	4	4	4
	B	11	9	7	6	6	6	6	6	6	6	5
	C	16	12	9	7	6	6	6	6	6	6	5
	D	23	19	17	15	13	13	13	13	11	—	—
ADJACENT THREAD SPACING												
2 Thread Hob	AA	—	—	—	—	8	7	6	5	4	3	2
	A	13	12	11	10	9	8	7	6	5	4	3
	B	15	14	13	12	11	10	9	8	7	6	5
	C	19	18	17	16	15	13	12	11	10	9	8
	D	23	22	21	20	18	16	15	14	13	—	—
3 Thread Hob	AA	—	—	—	—	9	8	7	6	5	4	3
	A	14	13	12	11	10	9	8	7	6	5	4
	B	17	16	15	14	13	12	11	10	9	7	6
	C	20	19	18	17	16	15	14	13	12	10	9
	D	23	22	21	20	19	18	17	16	15	—	—

Continued on Page 26

Copyright ASME International
Provided by IHS under license with ASME
No reproduction or networking permitted without license from IHS

Not for Resale

Table 16 Multiple Thread Hob Tolerances[1] For 30° P.A. Involute Splines (Continued)

(In Ten Thousandths of an Inch)

Hob Element	CLASS	NORMAL DIAMETRAL PITCH										
		2.5/5	3/6	4/8	5/10	6/12	8/16	10/20	12/24	16/32	20/40 24/48	32/64 48/96
TOOTH												
Pressure Angle[2] 2 Thread Hob	AA	—	—	—	—	1.7	1.7	1.7	1.7	1.7	1.7	1.7
	A	4	4	4	4	4	4	4	4	4	4	4
	B	7	7	7	7	7	7	7	7	6	6	6
	C	7	7	7	7	7	7	7	7	7	7	7
	D	14	10	10	10	10	8	7	7	7	—	—
Pressure Angle[2] 3 Thread Hob	AA	—	—	—	—	4	4	4	4	4	4	4
	A	7	7	7	7	7	7	7	7	7	7	7
	B	10	10	10	10	10	10	10	10	9	9	9
	C	13	13	13	13	13	13	13	13	10	10	10
	D	16	16	16	16	16	16	16	16	13	—	—
Thickness (Minus Only)	AA	—	—	—	—	10	10	10	10	10	10	5
	A	20	15	15	10	10	10	10	10	10	10	5
	B	20	15	15	10	10	10	10	10	10	10	5
	C	25	20	20	15	15	15	15	15	15	15	10
	D	35	30	25	20	20	20	20	20	20	—	—
FLUTES												
Adjacent Flute Spacing[3]	AA	—	—	—	—	8	8	8	8	6	6	6
	A	20	20	15	10	10	10	10	10	10	10	10
	B	30	30	20	15	15	15	10	10	10	10	10
	C	30	30	20	15	15	15	10	10	10	10	10
	D	50	50	30	25	25	25	20	20	20	17	17
Non-Adjacent Flute Spacing[3]	AA	—	—	—	—	15	15	15	15	15	15	15
	A	40	40	30	30	30	30	25	25	25	25	20
	B	60	60	50	50	50	50	40	40	40	35	30
	C	60	60	50	50	50	50	40	40	40	35	30
	D	100	100	80	80	80	70	60	60	60	50	40
Rake to Cutting Depth[4]	AA	—	—	—	—	5	3	3	3	3	3	3
	A	6	5	5	5	5	3	3	3	3	3	3
	B	8	7	7	7	7	5	5	5	5	5	5
	C	8	7	7	7	7	5	5	5	5	5	5
	D	30	20	20	20	20	15	15	10	10	10	10

Continued on Page 27

NOTE:

1. Except for LEAD and ADJACENT THREAD SPACING, These tolerances apply for all hob diameters. For hob diameters larger than those recommended for the smallest diameter for each pitch listed, the LEAD tolerances shall be increased by a factor of one-half of the percent oversize.
2. Total indicator variation.
3. Compared against master index plate.
4. Radial (zero rake) tooth faces are standard.

Copyright ASME International
Provided by IHS under license with ASME
No reproduction or networking permitted without license from IHS

Not for Resale

Table 16 Multiple Thread Hob Tolerances For 30° P.A. Involute Splines (Continued)

(In Ten Thousandths of an Inch)

		CUTTING FACE WIDTH in inches			
		Up Thru 1	Over 1 Thru 2	Over 2 Thru 4	Over 4 Thru 7
Flute	AA	10	15	25	—
Lead	A	10	15	25	30
Over Cut-	B	10	15	25	30
ting Face	C	10	15	25	30
Width	D	15	23	38	45

HOLE		HOLE DIAMETER in inches		
		1.250	0.750	0.500 and Smaller
	AA	2	2	2
Hole	A	2	2	2
Diameter	B	3	2	2
Plus Only	C	3	2	2
	D	5	4	3

Table 17 Single Thread Hob Tolerances[1] For 37.5° and 45° P.A. Involute Splines

(In Ten Thousandths of an Inch)

Hob Element	CLASS	NORMAL DIAMETRAL PITCH									
		10/20	16/32	20/40	24/48	32/64	40/80	48/96	64/128	80/160	128/256
RUNOUT[2]											
Hub Face	A	2	2	2	2	2	2	2	2	2	2
	C	2	2	2	2	2	2	2	2	2	2
Hub Diameter	A	2	2	2	2	2	2	2	2	2	2
	C	2	2	2	2	2	2	2	2	2	2
Outside Diameter	A	10	10	10	10	7	7	7	5	5	5
	C	12	12	12	12	10	10	10	8	8	8
LEAD[2]											
Tooth to Tooth	A	2	2	2	2	2	2	2	2	2	2
	C	4	4	4	4	3	3	3	3	3	3
In Any One Turn of Helix	A	11	10	10	10	7	7	7	6	6	6
	C	17	16	16	16	14	14	14	11	11	11
TOOTH											
Pressure Angle[2]	A	2	2	2	2	2	2	2	2	2	2
	C	3	3	3	3	3	3	3	3	3	3
Thickness (Minus Only)	A	10	10	10	10	8	8	8	5	5	5
	C	15	15	15	15	10	10	10	10	10	10

Continued on Page 28

Copyright ASME International
Provided by IHS under license with ASME
No reproduction or networking permitted without license from IHS

Not for Resale

Table 17 Single Thread Hob Tolerances[1] (Continued)

For 37.5° and 45° P.A. Involute Splines

(In Ten Thousandths of an Inch)

Hob Element	CLASS	NORMAL DIAMETRAL PITCH									
		10/20	16/32	20/40	24/48	32/64	40/80	48/96	64/128	80/160	128/256
FLUTES											
Adjacent Flute Spacing[3]	A	10	10	10	10	10	10	10	8	8	8
	C	10	10	10	10	10	10	10	8	8	8
Non-Adjacent Flute Spacing[3]	A	25	25	25	25	20	20	20	15	15	15
	C	40	40	35	35	30	30	30	25	25	25
Rake to Cutting Depth[4]	A	3	3	3	3	3	3	3	3	3	3
	C	5	5	5	5	5	5	5	5	5	5

		CUTTING FACE WIDTH in inches		
		Up Thru 1	Over 1 Thru 2	Over 2 Thru 4
Flute Lead Over Cutting Face Width	A	10	15	25
	C	10	15	25

HOLE		HOLE DIAMETER in inches		
		1.250	0.750	0.500 and Smaller
Hole Diameter Plus Only	A	2	2	2
	C	3	2	2

NOTE:
1. Except for LEAD, these tolerances apply for all hob diameters. For hob diameters larger than those recommended for standard hobs, the LEAD tolerances shall be increased by a factor of one-half of the percent oversize.
2. Total indicator variation.
3. Compared against master index plate.
4. Radial (zero rake) tooth faces are standard.

See Figures 4 and 5 for Basic Hob Tooth Form (Page 31)

Copyright ASME International
Provided by IHS under license with ASME
No reproduction or networking permitted without license from IHS

Not for Resale

Table 18 Marking Symbols

Hobs covered by this standard shall be marked with standard marking symbols

Hob Element or Feature	Standard Marking Symbol
Normal Circular Pitch	x.xxNCP
Normal Diametral Pitch	x NDP
Normal Module	x MOD
Normal Pressure Angle	x° NPA
Number of Threads	x THD.
Hand of Thread	x H
Whole Depth of Gear Tooth	x.xxx WD
Lead Angle	x°xx′ LA
Flute Lead	xxx.xx FL
Positive Rake	x°- .xxx
Negative Rake	NEG x°- .xxx
Pre-Shave	PRE-S
Pre-Grind	PRE-GR
Topping	TOP
Semi-Topping	S-TOP
Class	Cl-x
Roughing	RGH
Finishing	FIN
Number of Teeth In Spline	x-N
Spline O.D.	x.xx OD
Spline Tooth Thickness	.xxxT

Copyright ASME International
Provided by IHS under license with ASME
No reproduction or networking permitted without license from IHS

Not for Resale

Table 19 Standard Keyways for Hobs

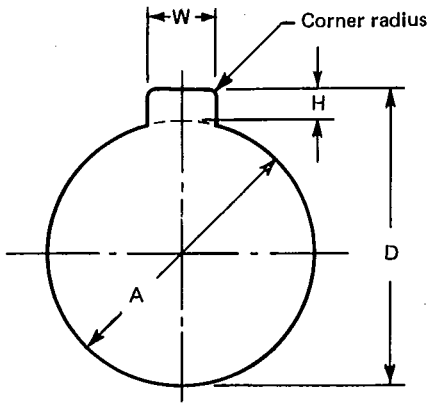

Nominal Hole Diameter A	Nominal Keyway W x H	W		D		Max Corner Radius
		Max	Min	Max	Min	
*0.315 (8 mm)	.06 x .03	0.068	0.065	0.351	0.347	0.008
*0.394 (10 mm)	.06 x .03	0.068	0.065	0.431	0.427	0.008
.500	.12 x .06	0.137	0.130	0.583	0.573	.03
.750	.12 x .06	0.137	0.130	0.833	0.823	.03
1.250	.25 x .12	0.262	0.255	1.395	1.385	.05
1.500	.38 x .19	0.400	0.385	1.708	1.698	.06
2.000	.50 x .25	0.525	0.510	2.270	2.260	.06
2.500	.62 x .16	0.650	0.635	2.838	2.828	.06

*Keyway is optional.

All dimensions in inches.

Copyright ASME International
Provided by IHS under license with ASME
No reproduction or networking permitted without license from IHS

Not for Resale

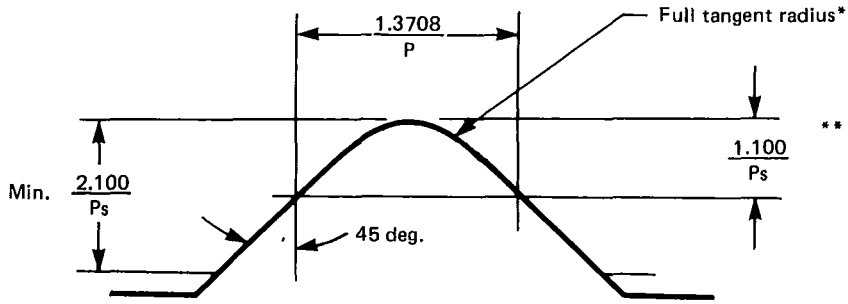

HOB TOOTH
10/20 DP THRU 128/256 DP

*Hobs 64/128 DP and finer may be made with flat crest.

**Required because of 45° PA to insure cutting within tolerance on minor diameter.

NOTE: P = Diametral pitch of rack and is shown as the numerator.

Ps = Stub pitch and is shown as the denominator.

FIG. 4 HOBS FOR ANSI B92.1 STANDARD 45° P.A. INVOLUTE SPLINES

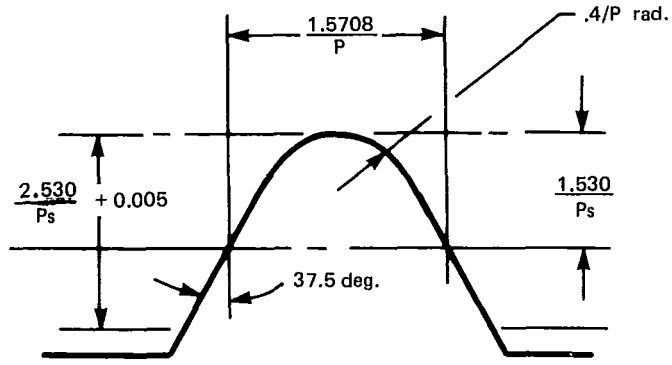

HOB TOOTH
2.5/5.0 DP Thru 48/96 DP

NOTE: P = Diametral pitch of rack and is shown as the numerator.

Ps = Stub pitch and is shown as the denominator.

FIG. 5 HOBS FOR ANSI B92.1 STANDARD 37.5° P.A. INVOLUTE SPLINES

Copyright ASME International
Provided by IHS under license with ASME
No reproduction or networking permitted without license from IHS

Not for Resale

Fillet Root Side Fit

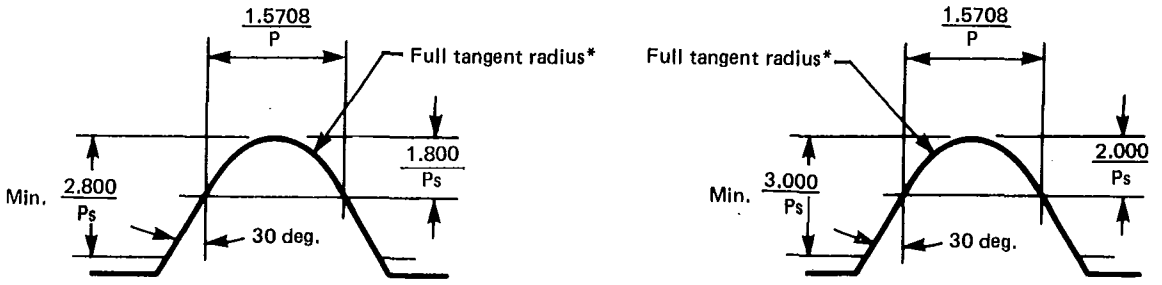

HOB TOOTH
2.5/5 DP THRU 12/24 DP

HOB TOOTH
16/32 DP AND FINER

*For 11 Tooth Splines and less Tip Rad. must be such as to satisfy fillet radius requirements as specified in ANSI Involute Spline Standard B92.1.

NOTE: P = *Diametral pitch of rack and is shown as the numerator.*

Ps = Stub pitch and is shown as the denominator.

FIG. 6 HOBS FOR ANSI B92.1 STANDARD 30° P.A. INVOLUTE SPLINES

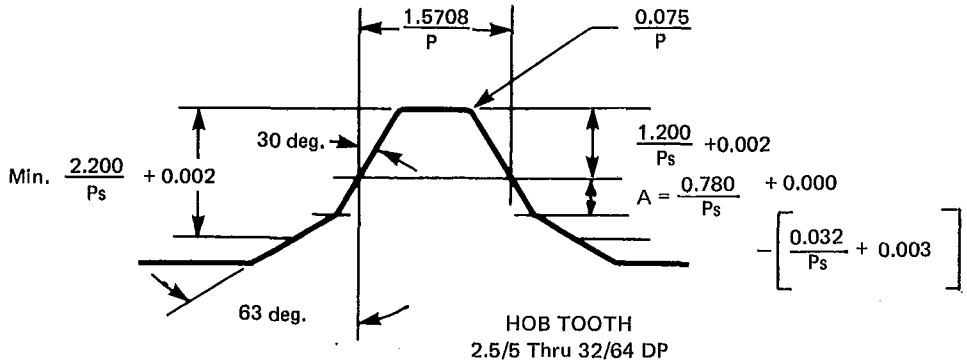

HOB TOOTH
2.5/5 Thru 32/64 DP

DIMENSION "A" in inches

DP		2.5/5	3/6	4/8	5/10	6/12	8/16	10/20	12/24	16/32	20/40	24/48	32/64
"A"	Max	0.1560	0.1300	0.0975	0.0780	0.0650	0.0487	0.0390	0.0325	0.0244	0.0195	0.0163	0.0122
	Min	0.1466	0.1215	0.0905	0.0718	0.0593	0.0437	0.0344	0.0282	0.0204	0.0157	0.0126	0.0087
			Major Diameter Fit										
		Side Fit											

The hob tooth form shown is used to hob both Flat Root Major Diameter Fit and Flat Root Side Fit Splines, however, B92.1 does not require a tooth chamfer at the major diameter of Flat Root Side Fit Splines.

NOTE: P = Diametral pitch of rack and is shown as the numerator.

Ps = Stub pitch and is shown as the denominator.

FIG. 7 FLAT ROOT MAJOR DIAMETER FIT AND FLAT ROOT SIDE FIT

Copyright ASME International
Provided by IHS under license with ASME
No reproduction or networking permitted without license from IHS

Not for Resale

APPENDIX A

CONVERSION TABLES FROM INCH TO MILLIMETER

Any dimension in this standard can be converted by the addition of its components from the tables in this Appendix.

Consider the actual or implied precision of the values in customary units in determining the number of significant digits to be retained in the SI equivalents. (For an explanation of conversion techniques, see American National Standard Metric Practice Guide, ANSI Z2101.1-1976)

inch	mm
1	25.40
2	50.80
3	76.20
4	101.60
5	127.00
6	152.40
7	177.80
8	203.20
9	228.60
10	254.00
11	279.40
12	304.80

inch	mm
1/64	0.40
1/32	0.79
3/64	1.19
1/16	1.58
5/64	1.98
3/32	2.38
7/64	2.78
1/8	3.18
9/64	3.57
5/32	3.97
11/64	4.37
3/16	4.76
13/64	5.16
7/32	5.56
15/64	5.95
1/4	6.35
17/64	6.75
9/32	7.14
19/64	7.54
5/16	7.94
21/64	8.33
11/32	8.73
23/64	9.13
3/8	9.52
25/64	9.92
13/32	10.32
27/64	10.72
7/16	11.11
29/64	11.51
15/32	11.91
31/64	12.30

inch	mm
1/2	12.70
33/64	13.10
17/32	13.49
35/64	13.89
9/16	14.29
37/64	14.68
19/32	15.08
39/64	15.48
5/8	15.88
41/64	16.27
21/32	16.67
43/64	17.07
11/16	17.46
45/64	17.86
23/32	18.26
47/64	18.65
3/4	19.05
49/64	19.45
25/32	19.84
51/64	20.24
13/16	20.64
53/64	21.04
27/32	21.43
55/64	21.83
7/8	22.22
57/64	22.62
29/32	23.02
59/64	23.42
15/16	23.81
61/64	24.21
31/32	24.61
63/64	25.00

Copyright ASME International
Provided by IHS under license with ASME
No reproduction or networking permitted without license from IHS
Not for Resale

Inch to Millimeter (for decimal inch values of less than one inch) [Do not interpolate]

Inch	0.xx0	0.xx1	0.xx2	0.xx3	0.xx4	0.xx5	0.xx6	0.xx7	0.xx8	0.xx9
0.00	0.00	0.03	0.05	0.08	0.10	0.13	0.15	0.18	0.20	0.22
0.01	0.25	0.28	0.30	0.33	0.36	0.38	0.41	0.43	0.46	0.48
0.02	0.51	0.53	0.56	0.58	0.61	0.64	0.66	0.69	0.71	0.74
0.03	0.76	0.79	0.81	0.84	0.86	0.89	0.91	0.94	0.96	0.99
0.04	1.02	1.04	1.07	1.09	1.12	1.14	1.17	1.19	1.22	1.24
0.05	1.27	1.30	1.32	1.35	1.37	1.40	1.42	1.45	1.47	1.50
0.06	1.52	1.55	1.57	1.60	1.63	1.65	1.68	1.70	1.73	1.75
0.07	1.78	1.80	1.83	1.85	1.88	1.90	1.93	1.96	1.98	2.01
0.08	2.03	2.06	2.08	2.11	2.13	2.16	2.18	2.21	2.24	2.26
0.09	2.29	2.31	2.34	2.36	2.39	2.41	2.44	2.46	2.49	2.51
0.10	2.54	2.57	2.59	2.62	2.64	2.67	2.69	2.72	2.74	2.77
0.11	2.79	2.82	2.84	2.87	2.90	2.92	2.95	2.97	3.00	3.02
0.12	3.05	3.07	3.10	3.12	3.15	3.18	3.20	3.23	3.25	3.28
0.13	3.30	3.33	3.35	3.38	3.40	3.43	3.45	3.48	3.50	3.53
0.14	3.56	3.58	3.61	3.63	3.66	3.68	3.71	3.73	3.76	3.78
0.15	3.81	3.84	3.86	3.88	3.91	3.94	3.96	3.99	4.01	4.04
0.16	4.06	4.09	4.11	4.14	4.17	4.19	4.22	4.24	4.27	4.29
0.17	4.32	4.34	4.37	4.39	4.42	4.44	4.47	4.50	4.52	4.55
0.18	4.57	4.60	4.62	4.65	4.67	4.70	4.72	4.75	4.78	4.80
0.19	4.83	4.85	4.88	4.90	4.93	4.95	4.98	5.00	5.03	5.05
0.20	5.08	5.11	5.13	5.16	5.18	5.21	5.23	5.26	5.28	5.31
0.21	5.33	5.36	5.39	5.41	5.44	5.46	5.49	5.51	5.54	5.56
0.22	5.59	5.61	5.64	5.66	5.69	5.72	5.74	5.77	5.79	5.82
0.23	5.84	5.87	5.89	5.92	5.94	5.97	5.99	6.02	6.05	6.07
0.24	6.10	6.12	6.15	6.17	6.20	6.22	6.25	6.27	6.30	6.32
0.25	6.35	6.38	6.40	6.43	6.45	6.48	6.50	6.53	6.55	6.58
0.26	6.60	6.63	6.65	6.68	6.71	6.73	6.76	6.78	6.81	6.83
0.27	6.86	6.88	6.91	6.93	6.96	6.98	7.01	7.04	7.06	7.09
0.28	7.11	7.14	7.16	7.19	7.21	7.24	7.26	7.29	7.32	7.34
0.29	7.37	7.39	7.42	7.44	7.47	7.49	7.52	7.54	7.57	7.59
0.30	7.62	7.64	7.67	7.70	7.72	7.75	7.77	7.80	7.83	7.85
0.31	7.87	7.90	7.92	7.95	7.98	8.00	8.03	8.05	8.08	8.10
0.32	8.13	8.15	8.18	8.20	8.23	8.26	8.28	8.31	8.33	8.36
0.33	8.38	8.41	8.43	8.46	8.48	8.51	8.53	8.56	8.59	8.61
0.34	8.64	8.66	8.69	8.71	8.74	8.76	8.79	8.81	8.84	8.86
0.35	8.89	8.92	8.94	8.97	8.99	9.02	9.04	9.07	9.09	9.12
0.36	9.14	9.17	9.19	9.22	9.25	9.27	9.30	9.32	9.35	9.38
0.37	9.40	9.42	9.45	9.47	9.50	9.52	9.55	9.58	9.60	9.63
0.38	9.65	9.68	9.70	9.73	9.75	9.78	9.80	9.83	9.85	9.88

Copyright ASME International
Provided by IHS under license with ASME
No reproduction or networking permitted without license from IHS
Not for Resale

Inch to Millimeter (for decimal inch values of less than one inch) [Do not interpolate]

Inch	0.xx0	0.xx1	0.xx2	0.xx3	0.xx4	0.xx5	0.xx6	0.xx7	0.xx8	0.xx9
0.39	9.91	9.93	9.96	9.98	10.01	10.03	10.06	10.08	10.11	10.13
0.40	10.16	10.19	10.21	10.24	10.26	10.29	10.31	10.34	10.36	10.39
0.41	10.41	10.44	10.46	10.49	10.52	10.54	10.57	10.59	10.62	10.64
0.42	10.67	10.69	10.72	10.74	10.77	10.80	10.82	10.85	10.87	10.90
0.43	10.92	10.95	10.97	11.00	11.02	11.05	11.07	11.10	11.13	11.15
0.44	11.18	11.20	11.23	11.25	11.28	11.30	11.32	11.35	11.38	11.40
0.45	11.43	11.46	11.48	11.51	11.53	11.56	11.58	11.61	11.63	11.66
0.46	11.68	11.71	11.73	11.76	11.79	11.81	11.84	11.86	11.89	11.91
0.47	11.94	11.96	11.99	12.01	12.04	12.06	12.09	12.12	12.14	12.17
0.48	12.19	12.22	12.24	12.27	12.29	12.32	12.34	12.37	12.40	12.42
0.49	12.45	12.47	12.50	12.52	12.55	12.57	12.60	12.62	12.65	12.67
0.50	12.70	12.73	12.75	12.78	12.80	12.83	12.85	12.88	12.90	12.93
0.51	12.95	12.98	13.00	13.03	13.06	13.08	13.11	13.14	13.16	13.18
0.52	13.21	13.23	13.26	13.28	13.31	13.34	13.36	13.39	13.41	13.44
0.53	13.46	13.49	13.51	13.54	13.56	13.59	13.61	13.64	13.67	13.69
0.54	13.71	13.74	13.77	13.79	13.82	13.84	13.87	13.89	13.92	13.94
0.55	13.97	14.00	14.02	14.05	14.07	14.10	14.12	14.15	14.17	14.20
0.56	14.22	14.25	14.27	14.30	14.33	14.35	14.38	14.40	14.43	14.45
0.57	14.48	14.50	14.53	14.55	14.58	14.60	14.63	14.66	14.68	14.71
0.58	14.73	14.76	14.78	14.81	14.83	14.86	14.88	14.91	14.94	14.96
0.59	14.99	15.01	15.04	15.06	15.09	15.11	15.14	15.16	15.19	15.21
0.60	15.24	15.27	15.29	15.32	15.34	15.37	15.39	15.42	15.44	15.47
0.61	15.49	15.52	15.54	15.57	15.60	15.62	15.65	15.67	15.70	15.72
0.62	15.75	15.77	15.80	15.82	15.85	15.88	15.90	15.93	15.95	15.98
0.63	16.00	16.02	16.05	16.08	16.10	16.13	16.15	16.18	16.21	16.23
0.64	16.26	16.28	16.31	16.33	16.36	16.38	16.41	16.43	16.46	16.48
0.65	16.51	16.54	16.56	16.59	16.61	16.64	16.66	16.69	16.71	16.74
0.66	16.76	16.79	16.81	16.84	16.87	16.89	16.92	16.94	16.97	16.99
0.67	17.02	17.04	17.07	17.09	17.12	17.14	17.17	17.20	17.22	17.25
0.68	17.27	17.30	17.32	17.35	17.37	17.40	17.42	17.45	17.48	17.50
0.69	17.53	17.55	17.58	17.60	17.63	17.65	17.68	17.70	17.73	17.75
0.70	17.78	17.81	17.83	17.86	17.88	17.91	17.93	17.96	17.98	18.01
0.71	18.03	18.06	18.08	18.11	18.14	18.16	18.19	18.21	18.24	18.26
0.72	18.29	18.31	18.34	18.36	18.39	18.42	18.44	18.47	18.49	18.52
0.73	18.54	18.57	18.59	18.62	18.64	18.67	18.69	18.72	18.75	18.77
0.74	18.80	18.82	18.85	18.87	18.90	18.92	18.95	18.97	19.00	19.02
0.75	19.05	19.08	19.10	19.13	19.15	19.18	19.20	19.23	19.25	19.28
0.76	19.30	19.33	19.35	19.38	19.41	19.43	19.46	19.48	19.51	19.53
0.77	19.56	19.58	19.61	19.63	19.66	19.68	19.71	19.74	19.76	19.79

Copyright ASME International
Provided by IHS under license with ASME
No reproduction or networking permitted without license from IHS
Not for Resale

Inch to Millimeter (for decimal inch values of less than one inch) [Do no interpolate]

Inch	0.xx0	0.xx1	0.xx2	0.xx3	0.xx4	0.xx5	0.xx6	0.xx7	0.xx8	0.xx9
0.78	19.81	19.84	19.86	19.89	19.91	19.94	19.96	19.99	20.02	20.04
0.79	20.07	20.09	20.12	20.14	20.17	20.19	20.22	20.24	20.27	20.29
0.80	20.32	20.35	20.37	20.40	20.42	20.45	20.47	20.50	20.52	20.55
0.81	20.57	20.60	20.62	20.65	20.68	20.70	20.73	20.75	20.78	20.80
0.82	20.83	20.85	20.88	20.90	20.93	20.96	20.98	21.01	21.03	21.06
0.83	21.08	21.11	21.13	21.16	21.18	21.21	21.23	21.26	21.29	21.31
0.84	21.34	21.36	21.39	21.42	21.44	21.46	21.49	21.51	21.54	21.56
0.85	21.59	21.62	21.64	21.67	21.29	21.72	21.74	21.77	21.79	21.82
0.86	21.84	21.87	21.89	21.92	21.95	21.97	22.00	22.02	22.05	22.07
0.87	22.10	22.12	22.15	22.17	22.20	22.22	22.25	22.28	22.30	22.33
0.88	22.35	22.38	22.40	22.43	22.45	22.48	22.50	22.53	22.56	22.58
0.89	22.61	22.63	22.66	22.68	22.71	22.73	22.76	22.78	22.81	22.83
0.90	22.86	22.89	22.91	22.94	22.96	22.99	23.01	23.04	23.06	23.09
0.91	23.11	23.14	23.16	23.19	23.22	23.24	23.27	23.29	23.32	23.34
0.92	23.37	23.39	23.42	23.44	23.47	23.50	23.52	23.55	23.57	23.60
0.93	23.62	23.65	23.67	23.70	23.72	23.75	23.77	23.80	22.83	23.85
0.94	23.88	23.90	23.93	23.95	23.98	24.00	24.03	24.05	24.08	24.10
0.95	24.13	24.16	24.18	24.21	24.23	24.26	24.28	24.31	24.33	24.36
0.96	24.38	24.42	24.43	24.46	24.49	24.51	24.54	24.56	24.59	24.61
0.97	24.64	24.66	24.69	24.71	24.74	24.76	24.79	24.82	24.84	24.87
0.98	24.89	24.92	24.94	24.97	24.99	25.02	25.04	25.07	25.10	25.12
0.99	25.15	25.17	25.20	25.22	25.25	25.27	25.30	25.32	25.35	25.37

Copyright ASME International
Provided by IHS under license with ASME
No reproduction or networking permitted without license from IHS
Not for Resale