P-11-29

ANSI/ASME B94.6-1984
28 November 1984
SUPERSEDING
ANSI B94.6-1981
2 April 1982

ACCEPTANCE NOTICE

The above non-government standardization document was adopted 28 November 1984 and is approved for use by the DoD. The indicated industry group has furnished the clearances required by existing regulations. Copies of the document are stocked by DoD Single StockPoint, Naval Publications and Forms Center, Philadelphia, PA 19120, for issue DoD activities only. Contractors and industry groups may obtain copies directly from:

The American Society of Mechanical Engineers
345 East 47th Street
New York, NY 10017

or

The American National Standards Institute
1430 Broadway
New York, NY 10018

Title of Document: Knurling
Document No.:ANSI/ASME B94.6-1984
Date of Specific Issue Adopted: 28 November 1984
Releasing Industry Group: The American Society of Mechanical Engineers

NOTICE: When reaffirmation, amendment, revision or cancellation of this standard is initially proposed, the industry group responsible for this standard shall inform the military coordinating activity of the proposed change and request participation.

Custodians: Army – AR; Navy – OS; Air Force – 16

Military Coordinating Activity: Army – AR

Review Activities: Army – AV, AT, EA
Navy – AS, SH, MC; DLA – IS

(Project Number: DRPR-0265)

User Interest: Army – ME; Navy – YD

AREA DRPR

Date of Issuance: May 15, 1985

This Standard will be revised when the Society approves the issuance of a new edition. There will be no addenda or written interpretations of the requirements of this Standard issued to this Edition.

This code or standard was developed under procedures accredited as meeting the criteria for American National Standards. The Consensus Committee that approved the code or standard was balanced to assure that individuals from competent and concerned interests have had an opportunity to participate. The proposed code or standard was made available for public review and comment which provides an opportunity for additional public input from industry, academia, regulatory agencies, and the public-at-large.

ASME does not "approve," "rate," or "endorse" any item, construction, proprietary device, or activity.

ASME does not take any position with respect to the validity of any patent rights asserted in connection with any items mentioned in this document, and does not undertake to insure anyone utilizing a standard against liability for infringement of any applicable Letters Patent, nor assume any such liability. Users of a code or standard are expressly advised that determination of the validity of any such patent rights, and the risk of infringement of such rights, is entirely their own responsibility.

Participation by federal agency representative(s) or person(s) affiliated with industry is not to be interpreted as government or industry endorsement of this code or standard.

ASME accepts responsibility for only those interpretations issued in accordance with governing ASME procedures and policies which preclude the issuance of interpretations by individual volunteers.

No part of this document may be reproduced in any form,
in an electronic retrieval system or otherwise,
without the prior written permission of the publisher.

Copyright © 1985 by
THE AMERICAN SOCIETY OF MECHANICAL ENGINEERS
All Rights Reserved
Printed in U.S.A.

THIS DOCUMENT CONTAINS 1 PAGES.

Copyright ASME International
Provided by IHS under license with ASME
No reproduction or networking permitted without license from IHS
Not for Resale

M 25 27
P 11 29

AN AMERICAN NATIONAL STANDARD

KNURLING

ANSI/ASME B94.6-1984

(REVISION OF ANSI B94.6-1981)

SPONSORED AND PUBLISHED BY

THE AMERICAN SOCIETY OF MECHANICAL ENGINEERS

United Engineering Center 345 East 47th Street New York, N. Y. 10017

Copyright ASME International
Provided by IHS under license with ASME
No reproduction or networking permitted without license from IHS

Not for Resale

ANSI/ASME B94.6-1984
28 November 1984
SUPERSEDING
ANSI B94.6-1981
2 April 1982

ACCEPTANCE NOTICE

The above non-government standardization document was adopted 28 November 1984 and is approved for use by the DoD. The indicated industry group has furnished the clearances required by existing regulations. Copies of the document are stocked by DoD Single StockPoint, Naval Publications and Forms Center, Philadelphia, PA 19120, for issue DoD activities only. Contractors and industry groups may obtain copies directly from:

The American Society of Mechanical Engineers
345 East 47th Street
New York, NY 10017

or

The American National Standards Institute
1430 Broadway
New York, NY 10018

Title of Document: Knurling
Document No.:ANSI/ASME B94.6-1984
Date of Specific Issue Adopted: 28 November 1984
Releasing Industry Group: The American Society of Mechanical Engineers

NOTICE: When reaffirmation, amendment, revision or cancellation of this standard is initially proposed, the industry group responsible for this standard shall inform the military coordinating activity of the proposed change and request participation.

Custodians: Army – AR; Navy – OS; Air Force – 16

Military Coordinating Activity: Army – AR

Review Activities: Army – AV, AT, EA
Navy – AS, SH, MC; DLA – IS

(Project Number: DRPR-0265)

User Interest: Army – ME; Navy – YD

AREA DRPR

Date of Issuance: May 15, 1985

This Standard will be revised when the Society approves the issuance of a new edition. There will be no addenda or written interpretations of the requirements of this Standard issued to this Edition.

This code or standard was developed under procedures accredited as meeting the criteria for American National Standards. The Consensus Committee that approved the code or standard was balanced to assure that individuals from competent and concerned interests have had an opportunity to participate. The proposed code or standard was made available for public review and comment which provides an opportunity for additional public input from industry, academia, regulatory agencies, and the public-at-large.

ASME does not "approve," "rate," or "endorse" any item, construction, proprietary device, or activity.

ASME does not take any position with respect to the validity of any patent rights asserted in connection with any items mentioned in this document, and does not undertake to insure anyone utilizing a standard against liability for infringement of any applicable Letters Patent, nor assume any such liability. Users of a code or standard are expressly advised that determination of the validity of any such patent rights, and the risk of infringement of such rights, is entirely their own responsibility.

Participation by federal agency representative(s) or person(s) affiliated with industry is not to be interpreted as government or industry endorsement of this code or standard.

ASME accepts responsibility for only those interpretations issued in accordance with governing ASME procedures and policies which preclude the issuance of interpretations by individual volunteers.

No part of this document may be reproduced in any form,
in an electronic retrieval system or otherwise,
without the prior written permission of the publisher.

Copyright © 1985 by
THE AMERICAN SOCIETY OF MECHANICAL ENGINEERS
All Rights Reserved
Printed in U.S.A.

Copyright ASME International
Provided by IHS under license with ASME
No reproduction or networking permitted without license from IHS

Not for Resale

FOREWORD

(This Foreword is not part of ANSI/ASME B94.6-1984.)

It has been commonly appreciated that in the production of knurling there were some difficult problems, and it appeared that a solution to many of them could probably be found in developing a knurling tool based on a diametral pitch system, as distinguished from the customary circumferential pitch formulas in use.

A diametral pitch system was first given consideration by the Company Member Conference of the American Standards Association. At its meeting of March 20, 1947, the Conference voted to establish a fact-finding Conference Subcommittee to consider the problems involved in knurling and the need for standardization in the field of knurling practice.

On November 10, 1947, the Conference Subcommittee presented a report (CMC 50) and concluded that a Technical Committee should give consideration to improving knurling.

At its meeting of December 2, 1948, the B5 Sectional Committee reported that the Mechanical Standards Committee of the ASA had requested that consideration be given to the establishment of a project on knurling. This request was approved at that time, and B5 Technical Committee 27 was thereupon organized in June 1949. TC27 held its first meeting in New York City on November 3, 1949.

A proposed standard was prepared by TC27, and in September 1952 it was distributed to industry for review and comments. TC27 prepared a new draft, dated March 1953, taking into consideration the comments and suggestions received from the industry review. The proposed standard was approved by the Sectional Committee, the sponsor, and finally by ASA on October 15, 1953. It was designated ASA B5.30-1953.

A revision of the standard was approved by ASA on August 18, 1958, and it was published as ASA B5.30-1958.

In November 1961, the ASA Mechanical Standards Board approved the request of the B5 Sectional Committee sponsors that a separate project be initiated under ASA Procedure on the topic of cutting tools. As a result of this action, a new project was initiated, and ASME accepted sponsorship. The Committee was designated B94 Cutting Tools, and the activity on cutting tools was removed from the B5 Sectional Committee. The designation numbers of the technical committees were changed to conform with the new sectional committee organization. B5 Technical Committee 27 was changed to B94 Technical Committee 11.

As required by ASA procedure, the Committee reviewed the proposal and approved some changes in the recommended tolerance on work blank diameter before knurling, as shown in Table 3. Other changes, of an editorial nature, were made to bring the standard into conformance with the B94 format.

The present edition of this Standard was approved as an American National Standard on November 28, 1984.

Copyright ASME International
Provided by IHS under license with ASME
No reproduction or networking permitted without license from IHS
Not for Resale

ASME STANDARDS COMMITTEE B94
Cutting Tools, Holders, Drivers, and Bushings

(The following is the roster of the Committee at the time of approval of this Standard.)

OFFICERS

E. J. Czopor, *Chairman*
W. R. Daisak, *Secretary*

COMMITTEE PERSONNEL

AMERICAN SOCIETY OF MECHANICAL ENGINEERS, THE
M. E. Merchant, Dr., Metcut Research Associates, Inc., Cincinnati, Ohio
C. F. Wilson, *Alternate,* General Electric Co., Worthington, Ohio

CUTTING TOOL MANUFACTURERS OF AMERICA
E. J. Czopor, Falcon Tool Co., Warren, Michigan
C. W. Jatho, *Alternate,* Cutting Tool Manufacturers Association, Birmingham, Michigan

GENERAL SERVICES ADMINISTRATION
W. R. Wacker, General Services Administration, Washington, D.C.

HACK AND BAND SAW MANUFACTURERS ASSOCIATION OF AMERICA
R. D. C. Schrade, Clemson Brothers Inc., Middletown, New York
C. M. Stockinger, *Alternate,* Hack and Band Saw Manufacturers Association of America, Cleveland, Ohio

METAL CUTTING TOOL INSTITUTE
W. A. Wagner, Cleveland Twist Drill Co., Cleveland, Ohio
J. G. Thimmig, *Alternate,* Metal Cutting Tool Institute, Cleveland, Ohio

NATIONAL MACHINE TOOL BUILDERS ASSOCIATION
J. J. Robinson, The Valeron Corp., Madison Heights, Michigan
A. M. Bratkovich, *Alternate,* National Machine Tool Builders Association, McLean, Virginia

SOCIETY OF MANUFACTURING ENGINEERS
G. L. Spencer, Ford Motor Co., Detroit, Michigan

UNITED STATES DEPARTMENT OF THE ARMY
D. L. York, Liaison, U.S. Army Armament, Rock Island, Illinois

INDIVIDUAL MEMBERS
A. Ashburn, McGraw-Hill, Inc., New York, New York
H. Cooper, Water Technology Inc., Troy, Michigan
R. T. Koblesky, Ingersoll Cutting Tool Co., Rockford, Illinois
L. Storrer, Mohawk Tools, Inc., Montpelier, Ohio

Copyright ASME International
Provided by IHS under license with ASME
No reproduction or networking permitted without license from IHS
Not for Resale

TECHNICAL COMMITTEE 11 ON KNURLING

C. L. Johnson, *Chairman*, IBM Corp., Endicott, New York
C. T. Appleton, Pratt & Whitney Co., Cleveland, Ohio
C. F. Cowan, Eastman Kodak Co., Rochester, New York
P. J. DesJardins, Pratt and Whitney Co., West Hartford, Connecticut
W. J. Johnson, J. H. Williams & Co., Buffalo, New York
J. B. Levy, General Electric Co., Schenectady, New York
W. E. Rolling, Brown & Sharpe Manufacturing Co., North Kingstown, Rhode Island

Copyright ASME International
Provided by IHS under license with ASME
No reproduction or networking permitted without license from IHS
Not for Resale

CONTENTS

Foreword iii
Committee Roster v

1 Scope and Purpose 1
2 Terminology 1
3 Types of Tools 1
4 Dimensioning 6
5 Marking on Knurls and Dies 6
6 Recommended Tolerance on Knurled Outside Diameters 6
7 The Tracking Correction Factor Q 6
8 Diagonal and Diamond Knurling With Straight Tooth Knurling Tools 6

Figures

1 Basic Formulas Measured in a Transverse Plane 2
2 Typical Cylindrical Knurls 2
3 Illustrations of Standard Pitch Knurls and Knurling 2
4 Typical Flat Reciprocating Knurling Dies – Straight Teeth 3
5 Typical Flat Stationary Knurling Dies – Straight Teeth 3
6 Typical Flat Reciprocating Knurling Dies – Diagonal Teeth 4
7 Typical Flat Stationary Knurling Dies – Diagonal Teeth 4
8 Flat Knurling Die – Straight Teeth 5
9 Drawing Indications for Specifying Knurling 5
10 Diagonal and Diamond Knurling 6

Tables

1 Preferred Sizes for Cylindrical Type Knurls 5
1A Additional Sizes for Bench and Engine Lathe Tool Holders 5
2 Specifications for Flat Knurling Dies 5
3 Knurling Data for Fractional Blank Diameters Using Standard Diametral Pitch Straight Knurling Tools 8
4 Specifications for Straight and Diagonal Tooth Cylindrical Knurls 10
5 Diagonal and Diamond Knurling Produced by Straight Tooth Cylindrical Knurls 11

Copyright ASME International
Provided by IHS under license with ASME
No reproduction or networking permitted without license from IHS
Not for Resale

ANSI/ASME B94.6-1984
AN AMERICAN NATIONAL STANDARD

AN AMERICAN NATIONAL STANDARD

KNURLING

1 SCOPE AND PURPOSE

This Standard covers knurling tools with standardized diametral pitches and includes dimensional relations with stock in the production of straight, diagonal, and diamond knurling on cylindrical surfaces having teeth of uniform pitch parallel to the axis of the cylinder or at a helix angle not exceeding 45 deg. with axis of work. Such knurling is made by displacement of the material on the surface when rotated under pressure against a knurling tool.

These tools and recommendations are equally applicable to general purpose and precision knurling. In brief, the advantage of this method is the provision by which good tracking (the ability of teeth to mesh as the tool penetrates the work blank in successive revolutions) is obtained by tools designed on the basis of diametral pitch instead of tpi (teeth per inch) when used with recommended work blank diameters that are multiples of $1/64$ or $1/32$ in., depending upon the pitch selected. This should improve the uniformity and appearance of knurling, eliminate the costly trial and error methods, reduce the failure of knurling tools and production of defective work, as well as decrease the number of tools required.

2 TERMINOLOGY

diametral pitch – the quotient of the total number of teeth in the circumference of the work divided by the basic blank diameter. In the case of the tool, it would be the total number of teeth in the circumference divided by the nominal diameter. In this Standard, the diametral pitch and number of teeth are always measured in a transverse plane which is perpendicular to the axis of rotation for diagonal as well as straight knurls and knurling.

knurl – a tool with teeth on its periphery used to produce an imprint of the teeth on the cylindrical surface of the work

knurling – designates the process and the knurled portion of the work

work – applies to the finished product

work blank – applies to the part prior to knurling

3 TYPES OF TOOLS

3.1 Cylindrical Type

(*a*) The cylindrical type knurling tool comprises a holder and one or more knurls. The knurl has a centrally located mounting hole and is provided with straight or diagonal teeth on its periphery. The knurl is used to reproduce, by rolling on the work blank, the pattern on the periphery of the knurl as the work blank and the knurl rotate.

(*b*) The basic formulas measured in a transverse plane are shown in Fig. 1.

(*c*) Cylindrical type knurls with letter symbols and formulas are shown in Fig. 2.

(*d*) The preferred sizes for cylindrical type knurls are given in Table 1. Additional sizes for bench and engine lathe tool holders are shown in Table 1A.

(*e*) Illustrations of standard pitch knurls and knurling are shown in Fig. 3.

3.2 Flat Type

(*a*) The flat type of tool is a knurling die, commonly used in reciprocating types of rolling machines as illustrated in Figs. 4 through 7. Dies may be made with either single or duplex faces having either straight or diagonal teeth. No preferred sizes are established for flat dies.

(*b*) An illustration of a flat knurling die having straight teeth, with the letter symbols and formulas, is shown in Fig. 8.

(*c*) Specifications for flat knurling dies are given in Table 2.

(*d*) Drawing indications for specifying knurling are shown in Fig. 9.

Copyright ASME International
Provided by IHS under license with ASME
No reproduction or networking permitted without license from IHS
Not for Resale

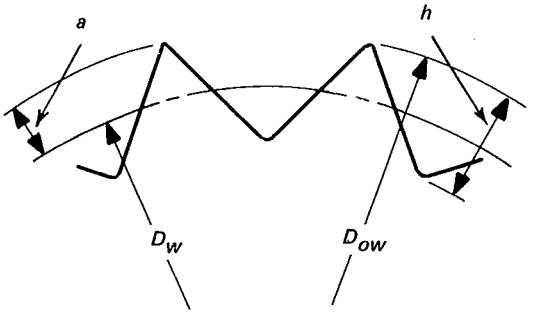

D_{ow} = knurled diameter
= $D_w + 2a$

D_w = work blank diameter
= N_w/P

N_w = number of teeth on work
= $P \times D_w$

P = diametral pitch
= N_w/D_w

a = addendum of tooth on work
= $(D_{ow} - D_w)/2$

h = tooth depth

FIG. 1 BASIC FORMULAS MEASURED IN A TRANSVERSE PLANE

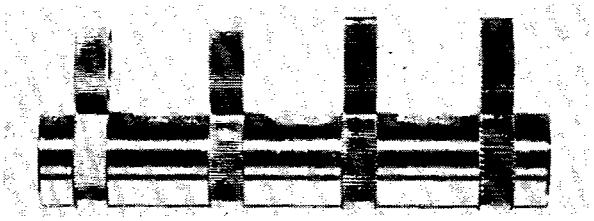

FIG. 3 ILLUSTRATIONS OF STANDARD PITCH KNURLS AND KNURLING

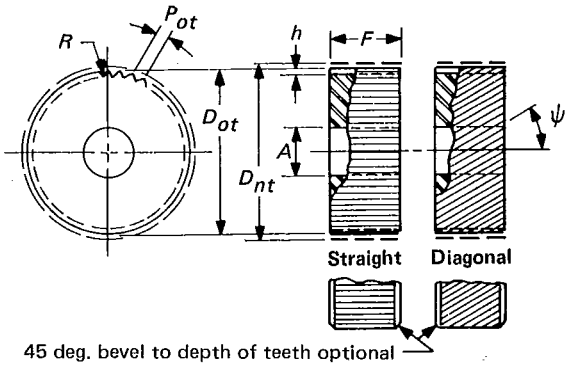

A = diameter of hole

D_{nt} = nominal diameter of cylindrical knurl
= N_t/P

D_{ot} = major diameter of cylindrical knurl
= $D_{nt} - [(N_t Q)/\pi]$

F = face width

N_t = number of teeth on cylindrical knurl
= $P \times D_{nt}$

P = diametral pitch
= N_t/D_{nt}

P_{nt} = circular pitch on nominal diameter
= π/P [Note (1)]

P_{ot} = circular pitch on major diameter
= $\pi D_{ot}/N_t$ [Note (1)]

Q = tracking correction factor applied to circular pitch based on nominal diameter
= $P_{nt} - P_{ot}$ [Note (3)]

R = radius root

h = tooth depth

ψ = helix angle of knurl (30 deg. preferred) [Note (2)]

NOTES:

(1) For diagonal knurls P_{nt} and P_{ot}, cover transverse circular pitch which is measured in the plane perpendicular to the axis of rotation.
(2) Helix angle on cylindrical knurl may be right hand or left hand. Left-hand helix angle shown on knurl produces right-hand helix on work.
(3) For description and specifications for tracking correction factor, see Section 7.

FIG. 2 TYPICAL CYLINDRICAL KNURLS

Copyright ASME International
Provided by IHS under license with ASME
No reproduction or networking permitted without license from IHS

Not for Resale

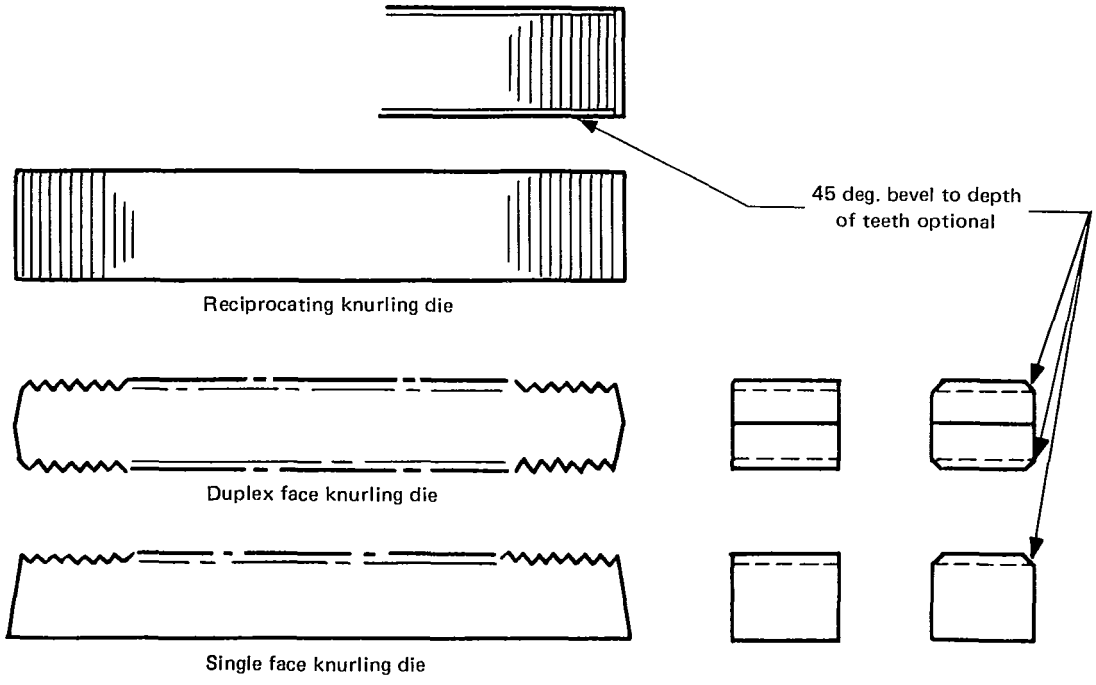

FIG. 4 TYPICAL FLAT RECIPROCATING KNURLING DIES – STRAIGHT TEETH

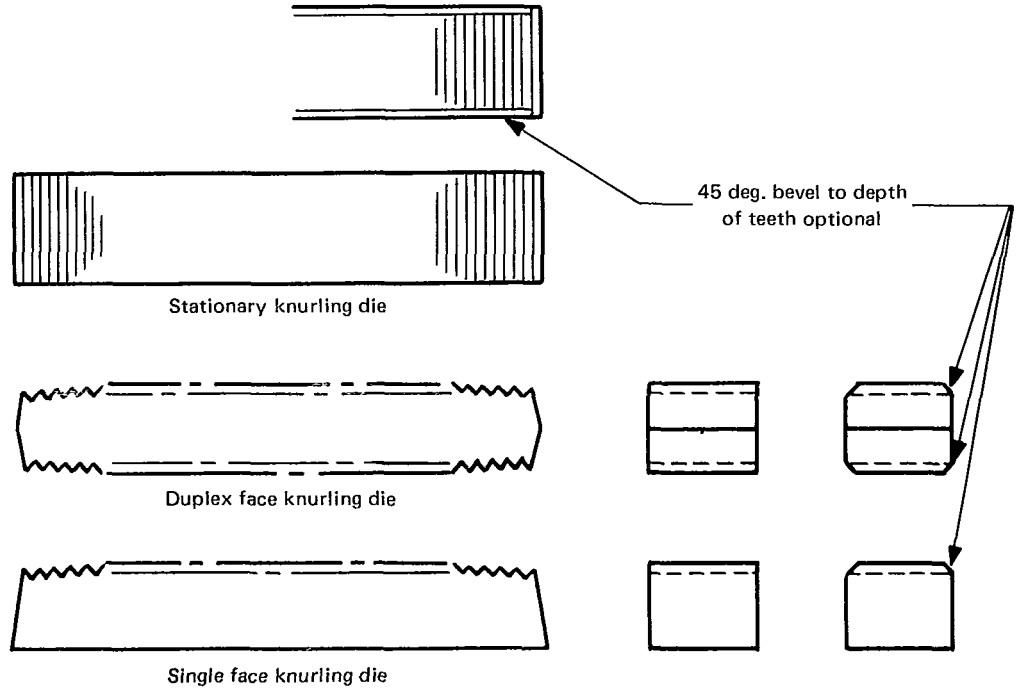

FIG. 5 TYPICAL FLAT STATIONARY KNURLING DIES – STRAIGHT TEETH

Copyright ASME International
Provided by IHS under license with ASME
No reproduction or networking permitted without license from IHS
Not for Resale

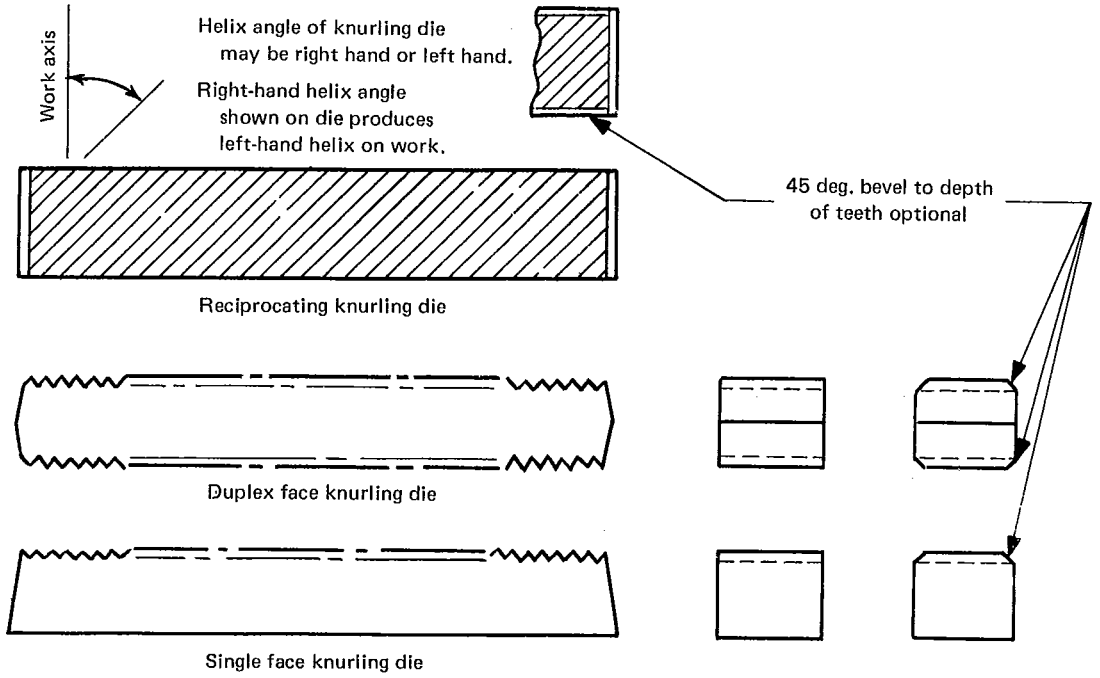

FIG. 6 TYPICAL FLAT RECIPROCATING KNURLING DIES – DIAGONAL TEETH

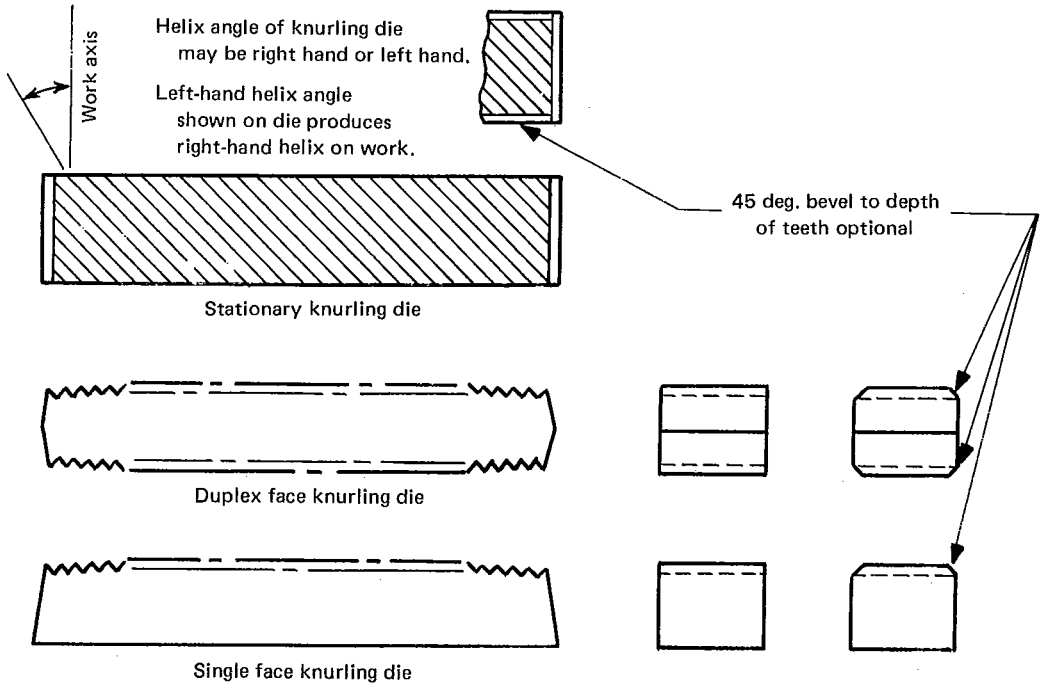

FIG. 7 TYPICAL FLAT STATIONARY KNURLING DIES – DIAGONAL TEETH

Copyright ASME International
Provided by IHS under license with ASME
No reproduction or networking permitted without license from IHS

Not for Resale

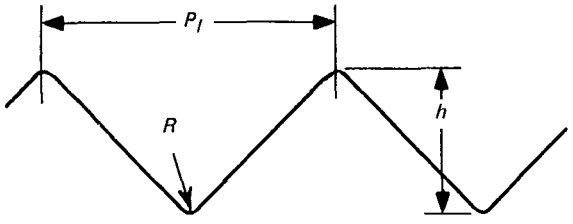

D_W = work blank (pitch) diameter

$= N_W/P$

N_W = number of teeth of work

$= P \times D_W$

P = diametral pitch

$= N_W/D_W$

P_l = linear pitch on flat die

= circular pitch on work pitch diameter, $P - Q$

Q = tracking correction factor applied to linear pitch on die [Note (1)]

R = radius at root

h = tooth depth

NOTE:
(1) For description and specifications for tracking correction factor, see Section 7.

FIG. 8 FLAT KNURLING DIE — STRAIGHT TEETH

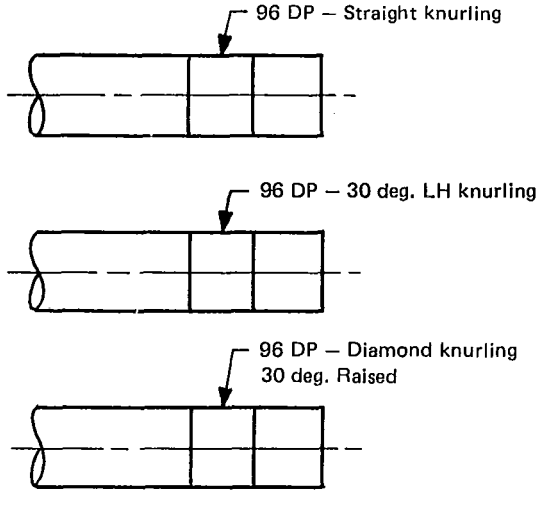

FIG. 9 DRAWING INDICATIONS FOR SPECIFYING KNURLING

TABLE 1 PREFERRED SIZES FOR CYLINDRICAL TYPE KNURLS

Nominal Outside Diameter, D_{nt}	Width of Face, F	Diameter of Hole, A	Number of Teeth for Standard Diametral Pitches, N_t			
			$64P$	$96P$	$128P$	$160P$
1/2	3/16	3/16	32	48	64	80
5/8	1/4	1/4	40	60	80	100
3/4	3/8	1/4	48	72	96	120
7/8	3/8	1/4	56	84	112	140

TABLE 1A ADDITIONAL SIZES FOR BENCH AND ENGINE LATHE TOOL HOLDERS[1]

Nominal Outside Diameter, D_{nt}	Width of Face, F	Diameter of Hole, A	Number of Teeth for Standard Diametral Pitches, N_t			
			$64P$	$96P$	$128P$	$160P$
5/8	5/16	7/32	40	60	80	100
3/4	5/8	1/4	48	72	96	120
1	3/8	5/16	64	96	128	160

GENERAL NOTE: For simplification of tools it is recommended that preference be given to use of $96P$.

NOTE:
(1) $64P$ approximates the circular pitch of 21 tpi, and $96P$ approximates the circular pitch of 31 tpi.

TABLE 2 SPECIFICATIONS FOR FLAT KNURLING DIES

Diametral Pitch, P	Linear Pitch P_l (1)	Tooth Depth, h		Radius at Root, R
		Straight	Diagonal	
64	0.0484	0.024	0.021	0.0070 0.0050
96	0.0325	0.016	0.014	0.0060 0.0040
128	0.0244	0.012	0.010	0.0045 0.0030
160	0.0195	0.009	0.008	0.0040 0.0025

NOTE:
(1) The linear pitches shown are theoretical. The exact linear pitch produced by a flat knurling die may vary slightly from those shown depending upon the rolling condition and the material being rolled.

Copyright ASME International
Provided by IHS under license with ASME
No reproduction or networking permitted without license from IHS
Not for Resale

3.3 Diagonal and Diamond Knurling

An illustration of the terms used in diagonal and diamond knurling is shown in Fig. 10.

4 DIMENSIONING

To maintain uniform drafting practice, essential dimensioning should include width, outside diameter before and after knurling, selected tolerance, diametral pitch, and style of knurling.

5 MARKING ON KNURLS AND DIES

Each knurl and die should be marked as follows:

(*a*) when straight, to indicate its diametral pitch;

(*b*) when diagonal, to indicate its diametral pitch, helix angle, and hand of the angle.

6 RECOMMENDED TOLERANCE ON KNURLED OUTSIDE DIAMETERS[1]

Three classes of tolerances are shown in Table 3. These classes and recommended applications are as follows.

(*a*) *Class I Tolerances.* This classification may be applied to straight, diagonal, and raised diamond knurling where the knurled outside diameter of the work need not be held to close dimensional tolerances. Such applications include knurling for decorative effect, grip on thumbscrews, and inserts for moldings and castings.

(*b*) *Class II Tolerances.* This classification may be applied to straight knurling only and is recommended for applications requiring closer dimensional control of the knurled outside diameter than provided by Class I tolerances.

(*c*) *Class III Tolerances.* This classification may be applied to straight knurling only and is recommended for applications requiring closest possible dimensional control of the knurled outside diameter. Such applications include knurling for close fits.

7 THE TRACKING CORRECTION FACTOR *Q*

Use of the preferred pitches for cylindrical knurls, shown in Table 4, results in good tracking on all fractional work blank diameters which are multiples of $1/64$ or $1/32$ in., depending on the pitch selected.

To accomplish this, the work surface must be evenly marked during the first revolution of the work, which requires pitch circles to roll without relative slippage. Therefore, extent of penetration of the work by the knurl during the first revolution must be considered. Because of the many variables involved in knurling practice, such as cam contours, hardness of the material, elasticity of machine tools and tool holders, etc., the method of determining the required correction is necessarily empirical.

Accordingly, the tracking correction factor Q has been incorporated in knurl specifications, shown in Table 4, on the basis of experimental work and experience, and has provided good tracking for general knurling conditions.

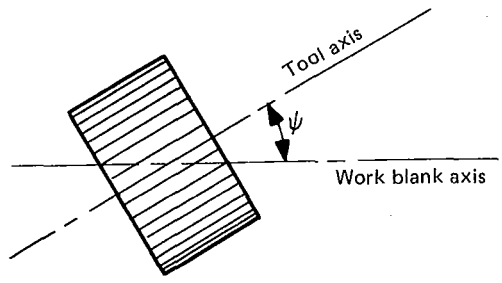

D_W = diameter of work blank
N_W = number of teeth produced on work blank (as measured in the transverse plane)
P = diametral pitch on tool
$P\psi$ = diametral pitch produced on work blank (as measured in the transverse plane) by setting tool axis at an angle ψ with respect to work blank axis
ψ = angle between tool axis and work axis

FIG. 10 DIAGONAL AND DIAMOND KNURLING

8 DIAGONAL AND DIAMOND KNURLING WITH STRAIGHT TOOTH KNURLING TOOLS[2]

Diagonal knurling on work blank may be accomplished by setting the axis of the knurling tool at an angle to the work axis (see Fig. 10).

[1]The width of the knurling should not exceed the diameter of the blank, and knurling wider than the knurling tool cannot be produced unless the knurl starts at the end of the work.

[2]Diamond knurling can be produced by the use of two straight knurls when their axes are swivelled from the work blank axis in accordance with the above formulas.

In using straight knurls to produce diagonal and diamond knurling, the transverse diametral pitch and number of teeth on the work will not be the same as that of the tool.

Copyright ASME International
Provided by IHS under license with ASME
No reproduction or networking permitted without license from IHS
Not for Resale

For example, if 30 deg. diagonal knurling were to be produced on 1 in. stock with a 160*P* straight knurl:

$$N_w = D_w P \cos \psi = 1.000 \times 160 \times 0.86603 = 138.56$$

Good tracking is theoretically possible by changing the helix angle as follows:

$$\psi = \cos^{-1}\left(\frac{N_w}{D_w P}\right) = \cos^{-1}\left(\frac{138}{1 \times 160}\right)$$

$$= \cos^{-1}(0.8625) = 30\tfrac{1}{2} \text{ deg. approx.}$$

Whenever it is more practical to machine the stock, good tracking can be obtained by reducing the work blank diameter as follows:

$$D_w = \frac{N_w}{P \cos \psi} = \frac{138}{160 \times 0.866} = 0.996 \text{ in.}$$

then

$$P\psi = P \cos \psi$$

and

$$N_w = D_w P \cos \psi$$

Theoretical work blank diameters on which standard pitch knurls may be expected to track are shown in Table 5 for the four standard diametral pitch knurling tools and for helix angles of 25, 30, 35, 40, and 45 deg.

Copyright ASME International
Provided by IHS under license with ASME
No reproduction or networking permitted without license from IHS

Not for Resale

TABLE 3 KNURLING DATA FOR FRACTIONAL BLANK DIAMETERS USING STANDARD DIAMETRAL PITCH STRAIGHT KNURLING TOOLS

Diametral Pitch		160		128		96		64	
Approximate Depth of Tooth or Increase in Knurled Diameter		0.009		0.012		0.016		0.024	
Diameter of Blank		Knurled Diameter	No. of Teeth in Knurled Circumference	Knurled Diameter	No. of Teeth in Knurled Circumference	Knurled Diameter	No. of Teeth in Knurled Circumference	Knurled Diameter	No. of Teeth in Knurled Circumference
3/32	0.094	0.103	15	...	...	...	...	...	...
1/8	0.125	0.134	20	...	...	...	...	...	...
9/64	0.141	...	...	0.153	18	...	...	...	...
5/32	0.156	0.165	25	0.168	20	...	...	...	...
11/64	0.172	...	...	0.184	22	...	...	...	...
3/16	0.188	0.197	30	0.200	24	...	...	...	...
13/64	0.203	...	...	0.215	26	...	...	...	...
7/32	0.219	0.228	35	0.231	28				
15/64	0.234	...	...	0.246	30	...	...	...	...
1/4	0.250	0.259	40	0.262	32	0.266	24	...	...
17/64	0.266	...	...	0.278	34	...	...	...	...
9/32	0.281	0.290	45	0.293	36	0.297	27	...	...
19/64	0.297	...	...	0.309	38	...	...	...	...
5/16	0.312	0.321	50	0.324	40	0.328	30	...	...
21/64	0.328	...	...	0.340	42	...	...	...	...
11/32	0.344	0.353	55	0.356	44	0.360	33	...	...
23/64	0.359	...	...	0.371	46	...	...	...	...
3/8	0.375	0.384	60	0.387	48	0.391	36	0.399	24
25/64	0.391	...	...	0.403	50	...	...	0.414	25
13/32	0.406	0.415	65	0.418	52	0.422	39	0.430	26
27/64	0.422	...	...	0.434	54	...	...	0.446	27
7/16	0.438	0.447	70	0.450	56	0.454	42	0.462	28
29/64	0.453	...	...	0.465	58	...	...	0.477	29
15/32	0.469	0.478	75	0.481	60	0.485	45	0.493	30
31/64	0.484	...	...	0.496	62	...	...	0.508	31
1/2	0.500	0.509	80	0.512	64	0.516	48	0.524	32
33/64	0.516	...	...	0.528	66	...	...	0.540	33
17/32	0.531	0.540	85	0.543	68	0.547	51	0.555	34
35/64	0.547	...	...	0.559	70	...	...	0.571	35
9/16	0.562	0.571	90	0.574	72	0.578	54	0.586	36
37/64	0.578	...	...	0.590	74	...	...	0.602	37
19/32	0.594	0.603	95	0.606	76	0.610	57	0.618	38
39/64	0.609	...	...	0.621	78	...	...	0.633	39

Copyright ASME International
Provided by IHS under license with ASME
No reproduction or networking permitted without license from IHS
Not for Resale

TABLE 3 KNURLING DATA FOR FRACTIONAL BLANK DIAMETERS USING STANDARD DIAMETRAL PITCH STRAIGHT KNURLING TOOLS (CONT'D)

Diametral Pitch		160		128		96		64	
		Knurled Diameter	No. of Teeth in Knurled Circumference	Knurled Diameter	No. of Teeth in Knurled Circumference	Knurled Diameter	No. of Teeth in Knurled Circumference	Knurled Diameter	No. of Teeth in Knurled Circumference
5/8	0.625	0.634	100	0.637	80	0.641	60	0.649	40
41/64	0.641	...	...	0.653	82	...	...	0.665	41
21/32	0.656	0.665	105	0.668	84	0.672	63	0.680	42
43/64	0.672	...	...	0.684	86	...	...	0.696	43
11/16	0.688	0.697	110	0.700	88	0.704	66	0.712	44
45/64	0.703	...	...	0.715	90	...	...	0.727	45
23/32	0.719	0.728	115	0.731	92	0.735	69	0.743	46
47/64	0.734	...	...	0.746	94	...	...	0.758	47
3/4	0.750	0.759	120	0.762	96	0.766	72	0.774	48
49/64	0.766	...	...	0.778	98	...	...	0.790	49
25/32	0.781	0.790	125	0.793	100	0.797	75	0.805	50
51/64	0.797	...	...	0.809	102	...	...	0.821	51
13/16	0.812	0.821	130	0.824	104	0.828	78	0.836	52
53/64	0.828	...	...	0.840	106	...	...	0.852	53
27/32	0.844	0.833	135	0.856	108	0.860	81	0.868	54
55/64	0.859	...	...	0.871	110	...	...	0.883	55
7/8	0.875	0.884	140	0.887	112	0.891	84	0.899	56
7/64	0.891	...	...	0.903	114	...	...	0.915	57
29/32	0.906	0.915	145	0.918	116	0.922	87	0.930	58
59/64	0.922	...	...	0.934	118	...	...	0.946	59
15/16	0.938	0.947	150	0.950	120	0.954	90	0.962	60
61/64	0.953	...	...	0.965	122	...	...	0.977	61
31/32	0.969	0.978	155	0.981	124	0.985	93	0.993	62
63/64	0.984	...	...	0.996	126	...	...	1.008	63
1	1.000	1.009	160	1.012	128	1.016	96	1.024	64
Recommended Tolerance on Knurled Outside Diameters		Class I	+0.002 -0.006	...	+0.003 -0.008	...	+0.004 -0.010	...	+0.005 -0.012
		Class II	+0.000 -0.006	...	+0.000 -0.008	...	+0.000 -0.009	...	+0.000 -0.010
		Class III	+0.000 -0.003	...	+0.000 -0.004	...	+0.000 -0.005	...	+0.000 -0.006
Recommended Tolerance on Work Blank Diameter Before Knurling (1)		Classes I & II	±0.0005	...	±0.0007	...	±0.0010	...	±0.0015
		Class III	+0.0000 -0.0005	...	+0.0000 -0.0007	...	+0.0000 -0.0010	...	+0.0000 -0.0015

GENERAL NOTES:

(a) Use of 64*P* knurl should be avoided as much as possible. For simplification of tools it is recommended that preference be given to use of 96*P*.

(b) For unlisted diameters refer to Fig. 1.

NOTE:

(1) Recommended tolerance on Class I and II work blanks is equal to 6% of the circular pitch on the nominal diameter. Recommended tolerance on Class III work blanks is equal to 3% of the circular pitch on the nominal diameter.

Copyright ASME International
Provided by IHS under license with ASME
No reproduction or networking permitted without license from IHS

Not for Resale

Copyright ASME International
Provided by IHS under license with ASME
No reproduction or networking permitted without license from IHS

TABLE 4 SPECIFICATIONS FOR STRAIGHT AND DIAGONAL TOOTH CYLINDRICAL KNURLS[1]

Diametral Pitch, P	Major Diameter of Cylindrical Knurl, D_{ot} tol $^{+\ 0.0000}_{-\ 0.0015}$ — Nominal Diameter, D_{nt} 1/2 in.	5/8 in.	3/4 in.	7/8 in.	1 in.	Tracking Correction Factor, Q	Tooth Depth, h tol $^{+\ 0.0015}_{-\ 0.0000}$ Straight	Diagonal	Radius at Root, R	Approx. Angle or Space (Between Sides of Adjacent Teeth), deg. Straight	Diagonal	Max. Eccentricity of Teeth (Total Indicator Reading)
64	0.4932	0.6165	0.7398	0.8631	0.9864	0.0006676	0.024	0.021	0.0070 0.0050	80	80	0.002
96	0.4960	0.6200	0.7440	0.8680	0.9920	0.0002618	0.016	0.014	0.0060 0.0040	80	80	0.002
128	0.4972	0.6215	0.7458	0.8701	0.9944	0.0001374	0.012	0.010	0.0045 0.0030	80	80	0.002
160	0.4976	0.6220	0.7464	0.8708	0.9952	0.00009425	0.009	0.008	0.0040 0.0025	80	80	0.002

GENERAL NOTES:
(a) Number of teeth = diametral pitch x nominal diameter.
(b) The different nominal diameters of knurls are used to meet established requirements of tool holders, machine sizes, and the contour of the work.
(c) For simplification of tools it is recommended that preference be given to use of $96P$.

NOTE:
(1) With 30 deg. helix angle.

Not for Resale

Copyright ASME International
Provided by IHS under license with ASME
No reproduction or networking permitted without license from IHS

TABLE 5 DIAGONAL AND DIAMOND KNURLING PRODUCED BY STRAIGHT TOOTH CYLINDRICAL KNURLS

No. of Teeth on Work	Theoretical Blank Diameter on Which Standard Pitch Knurls May Be Expected to Track (1)																			
	Angle Between Axis of Work and Knurl Axis																			
	25 deg.				30 deg.				35 deg.				40 deg.				45 deg.			
	64P	96P	128P	160P	64P	96P	128P	160P	64P	96P	128P	160P	64P	96P	128P	160P	64P	96P	128P	160P
15	...	...	...	0.103	...	...	...	0.108	...	...	...	0.114	...	...	0.153	0.122	...	...	0.166	0.133
16	...	...	...	0.110	...	...	...	0.115	...	...	0.153	0.122	...	...	0.163	0.130	...	...	0.177	0.141
17	...	...	...	0.117	...	...	0.153	0.123	...	...	0.162	0.130	...	...	0.173	0.139	...	...	0.188	0.150
18	...	...	0.155	0.124	...	...	0.162	0.130	...	...	0.172	0.137	...	...	0.184	0.147	0.398	0.265	0.199	0.159
19	...	...	0.164	0.131	...	...	0.171	0.137	...	...	0.181	0.145	...	...	0.194	0.155	0.420	0.280	0.210	0.168
20	...	...	0.172	0138	...	...	0.180	0.144	...	...	0.191	0.153	0.404	0.272	0.204	0.163	0.442	0.295	0.221	0.177
21	...	...	0.181	0.145	...	...	0.189	0.152	0.401	0.266	0.200	0.160	0.424	0.286	0.214	0.171	0.464	0.309	0.232	0.186
22	...	...	0.190	0.152	0.397	0.265	0.198	0.159	0.420	0.279	0.210	0.168	0.445	0.299	0.224	0.179	0.486	0.324	0.243	0.194
23	0.397	0.264	0.198	0.159	0.415	0.277	0.207	0.166	0.439	0.292	0.219	0.175	0.465	0.313	0.235	0.188	0.508	0.339	0.254	0.203
24	0.414	0.276	0.207	0.165	0.433	0.289	0.217	0.173	0.458	0.304	0.229	0.183	0.485	0.326	0.245	0.196	0.530	0.353	0.265	0.212
25	0.431	0.287	0.216	0.172	0.451	0.301	0.226	0.180	0.477	0.317	0.238	0.191	0.505	0.340	0.255	0.204	0.552	0.368	0.276	0.221
26	0.448	0.299	0.224	0.179	0.469	0.313	0.235	0.188	0.496	0.330	0.248	0.198	0.525	0.354	0.265	0.212	0.575	0.383	0.287	0.230
27	0.465	0.310	0.233	0.186	0.487	0.325	0.244	0.195	0.515	0.343	0.258	0.206	0.546	0.367	0.275	0.220	0.597	0.398	0.298	0.239
28	0.483	0.322	0.241	0.193	0.505	0.337	0.253	0.202	0.534	0.355	0.267	0.214	0.566	0.381	0.286	0.228	0.619	0.412	0.309	0.247
29	0.500	0.333	0.250	0.200	0.523	0.349	0.262	0.209	0.553	0.368	0.277	0.221	0.586	0.394	0.296	0.236	0.641	0.427	0.320	0.256
30	0.517	0.345	0.259	0.207	0.541	0.361	0.271	0.217	0.572	0.381	0.286	0.229	0.606	0.408	0.306	0.245	0.663	0.442	0.331	0.265
31	0.534	0.356	0.267	0.214	0.559	0.373	0.280	0.224	0.591	0.393	0.296	0.237	0.626	0.422	0.316	0.253	0.685	0.457	0.342	0.274
32	0.552	0.368	0.276	0.221	0.577	0.385	0.289	0.231	0.610	0.406	0.305	0.244	0.647	0.435	0.326	0.261	0.707	0.471	0.354	0.283
33	0.569	0.379	0.284	0.228	0.595	0.397	0.298	0.238	0.629	0.419	0.315	0.252	0.667	0.449	0.337	0.269	0.729	0.486	0.365	0.292
34	0.586	0.391	0.293	0.234	0.613	0.409	0.307	0.245	0.649	0.431	0.324	0.259	0.687	0.462	0.347	0.277	0.751	0.501	0.376	0.301
35	0.603	0.402	0.302	0.241	0.631	0.421	0.316	0.253	0.668	0.444	0.334	0.267	0.707	0.476	0.357	0.286	0.773	0.515	0.387	0.309
36	0.621	0.414	0.310	0.248	0.649	0.433	0.325	0.260	0.687	0.457	0.343	0.275	0.727	0.490	0.367	0.294	0.795	0.530	0.398	0.318
37	0.638	0.425	0.319	0.255	0.667	0.445	0.334	0.267	0.706	0.469	0.353	0.282	0.748	0.503	0.377	0.302	0.818	0.545	0.409	0.327
38	0.655	0.437	0.328	0.262	0.685	0.457	0.343	0.274	0.725	0.482	0.362	0.290	0.768	0.517	0.388	0.310	0.840	0.560	0.420	0.336
39	0.672	0.448	0.336	0.269	0.703	0.469	0.352	0.281	0.744	0.495	0.372	0.298	0.788	0.530	0.398	0.318	0.862	0.574	0.431	0.345
40	0.690	0.460	0.345	0.276	0.721	0.481	0.361	0.289	0.763	0.507	0.382	0.305	0.808	0.544	0.408	0.326	0.884	0.589	0.442	0.354
41	0.707	0.471	0.353	0.283	0.740	0.493	0.370	0.296	0.782	0.520	0.391	0.313	0.828	0.558	0.418	0.335	0.906	0.604	0.453	0.362
42	0.724	0.483	0.362	0.290	0.758	0.505	0.379	0.303	0.801	0.533	0.401	0.320	0.849	0.571	0.428	0.343	0.928	0.619	0.464	0.371
43	0.741	0.494	0.371	0.297	0.776	0.517	0.388	0.310	0.820	0.546	0.410	0.328	0.868	0.585	0.439	0.351	0.950	0.633	0.475	0.380
44	0.759	0.506	0.379	0.303	0.794	0.529	0.397	0.318	0.839	0.558	0.420	0.336	0.889	0.598	0.449	0.359	0.972	0.648	0.486	0.389
45	0.776	0.517	0.388	0.310	0.812	0.541	0.406	0.325	0.858	0.571	0.429	0.343	0.909	0.612	0.459	0.367	0.994	0.663	0.497	0.398
46	0.793	0.529	0.397	0.317	0.830	0.553	0.415	0.332	0.877	0.584	0.439	0.351	0.930	0.626	0.469	0.375	1.017	0.677	0.508	0.407
47	0.810	0.540	0.405	0.324	0.848	0.565	0.424	0.339	0.897	0.596	0.448	0.359	0.950	0.639	0.479	0.383	...	0.692	0.519	0.415
48	0.828	0.552	0.414	0.331	0.866	0.577	0.433	0.346	0.916	0.609	0.458	0.366	0.970	0.653	0.490	0.392	...	0.707	0.530	0.424

(*Table 5 continues on next page.*) (*See Notes on p. 14.*)

Not for Resale

Copyright ASME International
Provided by IHS under license with ASME
No reproduction or networking permitted without license from IHS

TABLE 5 DIAGONAL AND DIAMOND KNURLING PRODUCED BY STRAIGHT TOOTH CYLINDRICAL KNURLS (CONT'D)

No. of Teeth on Work	Theoretical Blank Diameter on Which Standard Pitch Knurls May Be Expected to Track (1)																			
	Angle Between Axis of Work and Knurl Axis																			
	25 deg.				30 deg.				35 deg.				40 deg.				45 deg.			
	64P	96P	128P	160P	64P	96P	128P	160P	64P	96P	128P	160P	64P	96P	128P	160P	64P	96P	128P	160P
49	0.845	0.563	0.422	0.338	0.884	0.589	0.442	0.354	0.935	0.622	0.467	0.374	0.990	0.666	0.500	0.400	...	0.722	0.541	0.433
50	0.862	0.575	0.431	0.345	0.902	0.601	0.451	0.361	0.954	0.634	0.477	0.381	1.010	0.680	0.510	0.408	...	0.736	0.552	0.442
51	0.879	0.586	0.440	0.352	0.920	0.613	0.460	0.368	0.973	0.647	0.486	0.389	...	0.693	0.520	0.416	...	0.751	0.563	0.451
52	0.896	0.598	0.448	0.359	0.938	0.625	0.469	0.375	0.992	0.660	0.496	0.397	...	0.707	0.530	0.424	...	0.766	0.574	0.460
53	0.914	0.609	0.457	0.365	0.956	0.637	0.478	0.382	1.010	0.672	0.505	0.404	...	0.721	0.541	0.432	...	0.781	0.586	0.468
54	0.931	0.621	0.465	0.372	0.974	0.650	0.487	0.390	...	0.685	0.515	0.412	...	0.734	0.551	0.441	...	0.795	0.597	0.477
55	0.948	0.632	0.474	0.379	0.992	0.662	0.496	0.397	...	0.698	0.525	0.420	...	0.748	0.561	0.449	...	0.810	0.608	0.486
56	0.965	0.644	0.483	0.386	1.010	0.674	0.505	0.404	...	0.710	0.534	0.427	...	0.761	0.571	0.457	...	0.825	0.619	0.495
57	0.983	0.655	0.491	0.393	...	0.686	0.514	0.411	...	0.723	0.544	0.435	...	0.775	0.581	0.465	...	0.839	0.630	0.504
58	1.000	0.667	0.500	0.400	...	0.698	0.523	0.419	...	0.736	0.553	0.443	...	0.789	0.592	0.473	...	0.854	0.641	0.513
59	...	0.678	0.509	0.407	...	0.710	0.532	0.426	...	0.749	0.563	0.450	...	0.802	0.602	0.481	...	0.869	0.652	0.521
60	...	0.690	0.517	0.414	...	0.722	0.541	0.433	...	0.761	0.572	0.458	...	0.816	0.612	0.490	...	0.884	0.663	0.530
61	...	0.701	0.526	0.421	...	0.734	0.550	0.440	...	0.774	0.582	0.465	...	0.829	0.622	0.498	...	0.898	0.674	0.539
62	...	0.713	0.534	0.428	...	0.746	0.559	0.447	...	0.787	0.591	0.473	...	0.843	0.632	0.506	...	0.913	0.685	0.548
63	...	0.724	0.543	0.434	...	0.758	0.568	0.455	...	0.799	0.601	0.481	...	0.857	0.643	0.514	...	0.928	0.696	0.557
64	...	0.736	0.552	0.441	...	0.770	0.577	0.462	...	0.812	0.610	0.488	...	0.870	0.653	0.522	...	0.943	0.707	0.566
65	...	0.747	0.560	0.448	...	0.782	0.586	0.469	...	0.825	0.620	0.496	...	0.884	0.663	0.530	...	0.957	0.718	0.575
66	...	0.759	0.569	0.455	...	0.794	0.595	0.476	...	0.837	0.629	0.504	...	0.897	0.673	0.538	...	0.972	0.729	0.583
67	...	0.770	0.578	0.462	...	0.806	0.604	0.484	...	0.850	0.639	0.511	...	0.911	0.683	0.547	...	0.987	0.740	0.592
68	...	0.781	0.586	0.469	...	0.818	0.613	0.491	...	0.863	0.649	0.519	...	0.925	0.694	0.555	...	1.001	0.751	0.601
69	...	0.793	0.595	0.476	...	0.830	0.622	0.498	...	0.875	0.658	0.526	...	0.938	0.704	0.563	...	...	0.762	0.610
70	...	0.805	0.603	0.483	...	0.842	0.631	0.505	...	0.888	0.668	0.534	...	0.952	0.714	0.571	...	...	0.773	0.619
71	...	0.816	0.612	0.490	...	0.854	0.640	0.512	...	0.901	0.677	0.542	...	0.965	0.724	0.579	...	...	0.784	0.628
72	...	0.827	0.621	0.497	...	0.866	0.650	0.520	...	0.913	0.687	0.549	...	0.979	0.734	0.587	...	...	0.795	0.636
73	...	0.839	0.629	0.503	...	0.878	0.659	0.527	...	0.926	0.696	0.557	...	0.993	0.744	0.596	...	...	0.807	0.645
74	...	0.850	0.638	0.510	...	0.890	0.668	0.534	...	0.939	0.706	0.565	...	1.006	0.755	0.604	...	...	0.818	0.654
75	...	0.862	0.647	0.517	...	0.902	0.677	0.541	...	0.951	0.715	0.572	...	...	0.765	0.612	...	...	0.829	0.663
76	...	0.873	0.655	0.524	...	0.914	0.686	0.548	...	0.964	0.725	0.580	...	...	0.775	0.620	...	...	0.840	0.672
77	...	0.885	0.664	0.531	...	0.926	0.695	0.556	...	0.977	0.734	0.587	...	...	0.785	0.628	...	...	0.851	0.681
78	...	0.896	0.672	0.538	...	0.938	0.704	0.563	...	0.990	0.744	0.595	...	...	0.795	0.636	...	...	0.862	0.689
79	...	0.908	0.681	0.545	...	0.950	0.713	0.570	...	1.002	0.753	0.603	...	...	0.806	0.645	...	...	0.873	0.698
80	...	0.919	0.690	0.552	...	0.962	0.722	0.577	...	...	0.763	0.610	...	...	0.816	0.653	...	...	0.884	0.707
81	...	0.931	0.698	0.559	...	0.974	0.731	0.585	...	...	0.773	0.618	...	...	0.826	0.661	...	...	0.895	0.716

(See Notes on p. 14.)

Not for Resale

Copyright ASME International
Provided by IHS under license with ASME
No reproduction or networking permitted without license from IHS

TABLE 5 DIAGONAL AND DIAMOND KNURLING PRODUCED BY STRAIGHT TOOTH CYLINDRICAL KNURLS (CONT'D)

No. of Teeth on Work	Theoretical Blank Diameter on Which Standard Pitch Knurls May Be Expected to Track (1)																			
	Angle Between Axis of Work and Knurl Axis																			
	25 deg.				30 deg.				35 deg.				40 deg.				45 deg.			
	64P	96P	128P	160P	64P	96P	128P	160P	64P	96P	128P	160P	64P	96P	128P	160P	64P	96P	128P	160P
82	...	0.942	0.707	0.565	...	0.986	0.740	0.592	...	...	0.782	0.626	...	...	0.836	0.669	...	...	0.906	0.725
83	...	0.954	0.715	0.572	...	0.998	0.749	0.599	...	...	0.792	0.633	...	...	0.846	0.677	...	...	0.916	0.734
84	...	0.965	0.724	0.579	...	1.010	0.758	0.606	...	...	0.801	0.641	...	...	0.857	0.685	...	...	0.928	0.742
85	...	0.977	0.733	0.586	...	...	0.767	0.613	...	...	0.811	0.649	...	...	0.867	0.694	...	...	0.939	0.751
86	...	0.988	0.741	0.593	...	...	0.776	0.621	...	...	0.820	0.656	...	...	0.877	0.702	...	...	0.950	0.760
87	...	1.000	0.750	0.600	...	...	0.785	0.628	...	...	0.830	0.664	...	...	0.887	0.710	...	...	0.961	0.769
88	...	...	0.759	0.607	...	...	0.794	0.635	...	...	0.839	0.671	...	...	0.897	0.718	...	...	0.972	0.778
89	...	...	0.767	0.614	...	...	0.803	0.642	...	...	0.849	0.679	...	...	0.908	0.726	...	...	0.983	0.787
90	...	...	0.776	0.621	...	...	0.812	0.650	...	...	0.858	0.687	...	...	0.918	0.734	...	...	0.994	0.795
91	...	...	0.784	0.628	...	...	0.821	0.657	...	...	0.868	0.694	...	...	0.928	0.742	...	...	1.005	0.804
92	...	...	0.793	0.634	...	...	0.830	0.664	...	...	0.877	0.702	...	...	0.938	0.751	...	...	...	0.813
93	...	...	0.802	0.641	...	...	0.839	0.671	...	...	0.887	0.710	...	...	0.948	0.759	...	...	...	0.822
94	...	...	0.810	0.648	...	...	0.848	0.678	...	...	0.897	0.717	...	...	0.959	0.767	...	...	...	0.831
95	...	...	0.819	0.655	...	...	0.857	0.686	...	...	0.906	0.725	...	...	0.969	0.775	...	...	...	0.840
96	...	...	0.828	0.662	...	...	0.866	0.693	...	...	0.916	0.732	...	...	0.979	0.783	...	...	...	0.849
97	...	...	0.836	0.669	...	...	0.875	0.700	...	...	0.925	0.740	...	...	0.989	0.791	...	...	...	0.857
98	...	...	0.845	0.676	...	...	0.884	0.707	...	...	0.935	0.748	...	...	0.999	0.800	...	...	...	0.866
99	...	...	0.853	0.683	...	...	0.893	0.714	...	...	0.944	0.755	...	...	1.009	0.808	...	...	...	0.875
100	...	...	0.862	0.690	...	...	0.902	0.722	...	...	0.954	0.763	...	...	...	0.816	...	...	...	0.884
101	...	...	0.871	0.697	...	...	0.911	0.729	...	...	0.963	0.771	...	...	...	0.824	...	...	...	0.893
102	...	...	0.879	0.703	...	...	0.920	0.736	...	...	0.973	0.778	...	...	...	0.832	...	...	...	0.902
103	...	...	0.888	0.710	...	...	0.929	0.743	...	...	0.982	0.786	...	...	...	0.840	...	...	...	0.910
104	...	...	0.896	0.717	...	...	0.938	0.751	...	...	0.992	0.794	...	...	...	0.849	...	...	...	0.919
105	...	...	0.905	0.724	...	...	0.947	0.758	...	...	1.001	0.801	...	...	...	0.857	...	...	...	0.928
106	...	...	0.914	0.731	...	...	0.956	0.765	...	...	...	0.809	...	...	...	0.865	...	...	...	0.937
107	...	...	0.922	0.738	...	...	0.965	0.772	...	...	...	0.816	...	...	...	0.873	...	...	...	0.946
108	...	...	0.931	0.745	...	...	0.974	0.779	...	...	...	0.824	...	...	...	0.881	...	...	...	0.955
109	...	...	0.940	0.752	...	...	0.983	0.787	...	...	...	0.832	...	...	...	0.889	...	...	...	0.963
110	...	...	0.948	0.759	...	...	0.992	0.794	...	...	...	0.839	...	...	...	0.897	...	...	...	0.972
111	...	...	0.957	0.765	...	...	1.001	0.801	...	...	...	0.847	...	...	...	0.906	...	...	...	0.981
112	...	...	0.965	0.772	...	...	...	0.808	...	...	...	0.855	...	...	...	0.914	...	...	...	0.990
113	...	...	0.974	0.779	...	...	...	0.815	...	...	...	0.862	...	...	...	0.922	...	...	...	0.999
114	...	...	0.983	0.786	...	...	...	0.823	...	...	...	0.870	...	...	...	0.930	...	...	...	1.007

(*Table 5 continues on next page.*) (*See Notes on p. 14.*)

Not for Resale

Copyright ASME International
Provided by IHS under license with ASME
No reproduction or networking permitted without license from IHS

TABLE 5 DIAGONAL AND DIAMOND KNURLING PRODUCED BY STRAIGHT TOOTH CYLINDRICAL KNURLS (CONT'D)

No. of Teeth on Work	Theoretical Blank Diameter on Which Standard Pitch Knurls May Be Expected to Track (1)																			
	Angle Between Axis of Work and Knurl Axis																			
	25 deg.				30 deg.				35 deg.				40 deg.				45 deg.			
	64P	96P	128P	160P	64P	96P	128P	160P	64P	96P	128P	160P	64P	96P	128P	160P	64P	96P	128P	160P
115	...	...	0.991	0.793	...	...	...	0.830	...	...	...	0.877	...	...	...	0.938	...	...	...	...
116	...	...	1.000	0.800	...	...	...	0.837	...	...	...	0.885	...	...	...	0.946	...	...	...	...
117	...	...	1.008	0.807	...	...	...	0.844	...	...	...	0.893	...	...	...	0.955	...	...	...	...
118	...	...	...	0.814	...	...	...	0.852	...	...	...	0.900	...	...	...	0.963	...	...	...	...
119	...	...	...	0.821	...	...	...	0.859	...	...	...	0.908	...	...	...	0.971	...	...	...	...
120	...	...	...	0.828	...	...	...	0.866	...	...	...	0.916	...	...	...	0.979	...	...	...	...
121	...	...	...	0.834	...	...	...	0.873	...	...	...	0.923	...	...	...	0.987	...	...	...	...
122	...	...	...	0.841	...	...	...	0.880	...	...	...	0.931	...	...	...	0.995	...	...	...	...
123	...	...	...	0.848	...	...	...	0.888	...	...	...	0.938	...	...	...	1.003	...	...	...	...
124	...	...	...	0.855	...	...	...	0.895	...	...	...	0.946	...	...	...	...	...	...	...	...
125	...	...	...	0.862	...	...	...	0.902	...	...	...	0.954	...	...	...	...	...	...	...	...
126	...	...	...	0.869	...	...	...	0.909	...	...	...	0.961	...	...	...	...	...	...	...	...
127	...	...	...	0.876	...	...	...	0.917	...	...	...	0.969	...	...	...	...	...	...	...	...
128	...	...	...	0.883	...	...	...	0.924	...	...	...	0.977	...	...	...	...	...	...	...	...
129	...	...	...	0.890	...	...	...	0.931	...	...	...	0.984	...	...	...	...	...	...	...	...
130	...	...	...	0.896	...	...	...	0.938	...	...	...	0.992	...	...	...	...	...	...	...	...
131	...	...	...	0.903	...	...	...	0.945	...	...	...	1.000	...	...	...	...	...	...	...	...
132	...	...	...	0.910	...	...	...	0.953	...	...	...	...	...	...	...	...	...	...	...	...
133	...	...	...	0.917	...	...	...	0.960	...	...	...	...	...	...	...	...	...	...	...	...
134	...	...	...	0.924	...	...	...	0.967	...	...	...	...	...	...	...	...	...	...	...	...
135	...	...	...	0.931	...	...	...	0.974	...	...	...	...	...	...	...	...	...	...	...	...
136	...	...	...	0.938	...	...	...	0.981	...	...	...	...	...	...	...	...	...	...	...	...
137	...	...	...	0.945	...	...	...	0.989	...	...	...	...	...	...	...	...	...	...	...	...
138	...	...	...	0.952	...	...	...	0.996	...	...	...	...	...	...	...	...	...	...	...	...
139	...	...	...	0.959	...	...	...	...	...	...	...	...	...	...	...	...	...	...	...	...
140	...	...	...	0.965	...	...	...	...	...	...	...	...	...	...	...	...	...	...	...	...
141	...	...	...	0.972	...	...	...	...	...	...	...	...	...	...	...	...	...	...	...	...
142	...	...	...	0.979	...	...	...	...	...	...	...	...	...	...	...	...	...	...	...	...
143	...	...	...	0.986	...	...	...	...	...	...	...	...	...	...	...	...	...	...	...	...
144	...	...	...	0.993	...	...	...	...	...	...	...	...	...	...	...	...	...	...	...	...
145	...	...	...	1.000	...	...	...	...	...	...	...	...	...	...	...	...	...	...	...	...

GENERAL NOTE: For simplification of tools, it is recommended that preference be given to use of 96*P*.

NOTE:
(1) Modifications of these diameters may be made in order to suit various knurling conditions such as materials and variations in practice.

Not for Resale

AMERICAN NATIONAL STANDARDS FOR CUTTING TOOLS

Blanks and Semi-Finished Blanks for Solid Carbide Taps B94.1-1977
Reamers B94.2-1983
Straight Cut-Off Blades for Lathes and Screw Machines B94.3-1965 (R1984)
Identification System for Indexable Inserts for Cutting Tools B94.4-1976
Carbide Blanks and Single-Point Brazed Tools B94.5-1974
Knurling B94.6-1984
Hobs B94.7-1980
Inserted Blade Milling Cutter Bodies B94.8-1967 (R1980)
Taps — Cut and Ground Threads B94.9-1979
Twist Drills B94.11M-1979
Carbide-Tipped Masonry Drills and Blanks for Carbide-Tipped Masonry Drills B94.12-1977 (R1982)
Blanks for Carbide Burs B94.13-1976 (R1982)
Punches — Basic Head Type B94.14-1968 (R1982)
Punches — Basic Head Type (Metric) B94.14.1-1977 (R1984)
Retainers — Basic Ball-Lock, Punch and Die Button, Light and Heavy Duty B94.16-1968 (R1982)
Retainers — Basic Ball-Lock, Punch and Die Button, Light and Heavy Duty (Metric) B94.16.1-1978
Gages — Functional, Ball-Lock Punches, Die Buttons and Retainers B94.17-1968 (R1982)
Gages — Functional, Ball-Lock Punches, Die Buttons and Retainers (Metric) B94.17.1-1977
Punches — Basic Ball-Lock Light and Heavy Duty B94.18-1968 (R1981)
Punches — Basic Ball-Lock Light and Heavy Duty (Metric) B94.18.1-1977
Milling Cutters and End Mills B94.19-1977
Specifications for Carbide Blanks for Twist Drills, Reamers, End Mills, and Random Rod B94.20-1977 (R1982)
Gear Shaper Cutters B94.21-1968 (R1974)
Punches — Variable, Head Type B94.22-1968 (R1981)
Punches — Variable, Head Type (Metric) B94.22.1-1977 (R1984)
Punch Guide Bushings — Variable, Press Fit B94.23-1969 (R1981)
Indexable Inserts for Cutting Tools B94.25-1982
Indexable (Throw-Away) Insert Holders B94.26-1969 (R1977)
Die Buttons — Basic Taper Relief, Press Fit B94.27-1970 (R1976)
Die Buttons — Basic Taper Relief, Press Fit (Metric) B94.27.1M-1983
Die Buttons — Basic Straight Relief, Press Fit B94.28-1970 (R1976)
Die Buttons — Basic Straight Relief, Press Fit (Metric) B94.28.1M-1984
Die Buttons — Basic Ball-Lock B94.29-1970 (R1983)
Die Buttons — Basic Ball-Lock (Metric) B94.29.1-1977
Die Buttons — Variable, Press Fit B94.30-1970 (R1983)
Steel Rotary Slitting Knives and Steel Spacing Collars B94.31-1981
Circular and Dove Tailed Forming Tool Blanks (Redesignation of B5.7-1954) B94.32-1954 (R1971)
Jig Bushings B94.33-1974 (R1980)
Life Tests of Single-Point Tools (Redesignation of B5.19-1946) B94.34-1946 (R1971)
Drill Drivers, Split-Sleeve, Collet Type B94.35-1972 (R1983)
Life Tests for Single-Point Tools of Sintered Carbide (Redesignation of B5.35-1956) B94.36-1956 (R1971)
Roller Turner Type Cutting Tools, Single-Point B94.37M-1979
Punches — Variable, Angle Head Type and Related Quill Bushings B94.38-1972 (R1978)
Punches — Basic, Combination Angle Head Type and Related Quill Bushings B94.39-1972 (R1978)
Punches — Wire Type B94.40-1972 (R1978)
Punches — Basic, Angle Head Type and Related Quill Bushings B94.41-1972 (R1978)
Carbide Blanks for Tipping Circular Saws B94.42-1972 (R1978)
Die Buttons — Variable, Press Fit, Headless and Head Type, Step Relief B94.43-1972 (R1978)
Punches — Basic, Cylindrical Head Type and Related Quill Bushings B94.44-1972 (R1978)
Precision Holders for Indexable Inserts B94.45M-1979
Carbide Seats Used With Indexable Inserts for Clamp Type Holders B94.46-1973
Carbide Chip Breakers Used With Indexable Inserts for Clamp Type Holders B94.47M-1980
Precision Indexable Insert Cartridges B94.48-1976
Spade Drill Blades and Spade Drill Holders B94.49-1975
Basic Nomenclature and Definitions for Single-Point Cutting Tools B94.50-1975
Specifications for Band Saw Blades (Metal Cutting) B94.51M-1984
Specifications for Hacksaw Blades B94.52M-1984
Solid Steel Rectangular Metal Cutting Squaring Shear Knives — Dimensional Tolerances B94.53-1978

K00022

Copyright ASME International
Provided by IHS under license with ASME
No reproduction or networking permitted without license from IHS
Not for Resale