STD.ASME B94.54-ENGL 1999 0759670 0615595 123

ASME B94.54-1999
(Revision of ASME B94.54-1994)

SPECIFICATIONS FOR HOLE SAWS, HOLE SAW ARBORS, AND HOLE SAW ACCESSORIES

AN AMERICAN NATIONAL STANDARD

The American Society of Mechanical Engineers

COPYRIGHT American Society of Mechanical Engineers
Licensed by Information Handling Services

STD.ASME B94.54-ENGL 1999 ■ 0759670 0615596 06T ■



The American Society of Mechanical Engineers

AN AMERICAN NATIONAL STANDARD

SPECIFICATIONS FOR HOLE SAWS, HOLE SAW ARBORS, AND HOLE SAW ACCESSORIES

ASME B94.54-1999
(Revision of ASME B94.54-1994)

COPYRIGHT American Society of Mechanical Engineers
Licensed by Information Handling Services

Date of Issuance: December 30, 1999

This Standard will be revised when the Society approves the issuance of a new edition. There will be no addenda or written interpretations of the requirements of this Standard issued to this edition.

ASME is the registered trademark of The American Society of Mechanical Engineers.

This code or standard was developed under procedures accredited as meeting the criteria for American National Standards. The Standards Committee that approved the code or standard was balanced to assure that individuals from competent and concerned interests have had an opportunity to participate. The proposed code or standard was made available for public review and comment that provides an opportunity for additional public input from industry, academia, regulatory agencies, and the public-at-large.

ASME does not "approve," "rate," or "endorse" any item, construction, proprietary device, or activity.

ASME does not take any position with respect to the validity of any patent rights asserted in connection with any items mentioned in this document, and does not undertake to insure anyone utilizing a standard against liability for infringement of any applicable letters patent, nor assumes any such liability. Users of a code or standard are expressly advised that determination of the validity of any such patent rights, and the risk of the infringement of such rights, is entirely their own responsibility.

Participation by federal agency representative(s) or person(s) affiliated with industry is not to be interpreted as government or industry endorsement of this code or standard.

ASME accepts responsibility for only those interpretations of this document issued in accordance with the established ASME procedures and policies, which precludes the issuance of interpretations by individuals.

No part of this document may be reproduced in any form,
in an electronic retrieval system or otherwise,
without the prior written permission of the publisher.

The American Society of Mechanical Engineers
Three Park Avenue, New York, NY 10016-5990

Copyright © 1999 by
THE AMERICAN SOCIETY OF MECHANICAL ENGINEERS
All Rights Reserved
Printed in U.S.A.

COPYRIGHT American Society of Mechanical Engineers
Licensed by Information Handling Services

FOREWORD

This Standard on Specifications for Hole Saws, Hole Saw Arbors, and Hole Saw Accessories was originally prepared by the B94 Technical Committee 19 on Hack, Band, and Hole Saws. In 1997, the technical committees of the ASME B94 Standards Committee were reorganized and TC 19 became the Subcommittee on Saws and Knives. This Subcommittee prepared the current revision with the assistance of the Hack and Band Saw Manufacturers Association of America.

This edition of B94.54 was approved by the American National Standards Institute on November 2, 1999.

COPYRIGHT American Society of Mechanical Engineers
Licensed by Information Handling Services

ASME STANDARDS COMMITTEE B94
Cutting Tools, Holders, Drivers, and Bushings

(The following is the roster of the Committee at the time of approval of this Standard.)

OFFICERS

P. Bourg, *Chair*
P. Esteban, *Secretary*

COMMITTEE PERSONNEL

P. Bourg, Tivoly, Inc.
A. M. Bratkovich, The Association for Manufacturing Technology
E. J. Czopor, E&S Sales, Inc.
P. Esteban, The American Society of Mechanical Engineers
D. Fischer, The Wapakoneta Machine Co.
W. E. Gill, Keen Agers, Inc.
R. V. Leverenz, Stellram
D. J. Lionette, Porter Precision Products
M. E. Merchant, Institute of Advanced Manufacturing Science
V. J. Peterson, Kennametal
C. W. Preuss, Kingsford Broach and Tool, Inc.
A. D. Shepherd, Jr., Emuge Corp.
C. M. Stockinger, U.S. Cutting Tool Institute
J. Wherry, Cemented Carbide Product Association

SUBCOMMITTEE ON SAWS AND KNIVES

C. E. Churchill, ASKO, Inc.
D. Fischer, The Wapakoneta Machine Co.
I. S. Ganyard, Cowles Tool Co.
D. P. Ranly, Monarch/Stamco
R. S. Stoddard, L.S. Starrett Co.

COPYRIGHT American Society of Mechanical Engineers
Licensed by Information Handling Services

CONTENTS

Foreword iii
Committee Roster v

1 Scope 1

2 Definitions 1

3 Hole Saws 1
3.1 Classifications of Hole Saws 1
3.2 Limitations of Sizes 2
3.3 Elements of the Hole Saw Blade 2
3.4 Tooth Form and Set 2

4 Elements of the Hole Saw 3
4.1 Hole Saw Design 3
4.2 Concentricity of Hole Saws 6
4.3 Tooth Crest Uniformity 6

5 Hole Saw Arbors 6
5.1 Hole Saw Arbors 6
5.2 Pilot Drill 6

6 Hole Saw Accessories 6
6.1 Drive Plates 6
6.2 Extensions 6
6.3 Morse Taper Adapters 6

Figures
1 Blade Configuration 2
2 Alternate Set 2
3 Raker Set 2
4 Variable Raker Tooth Set 2
5 Tooth Set and Overall Set 3
6 Tooth Terminology 5
7 Jig for Measuring Tooth Crest and Radial Runout 5
8 Hole Saw $1^{3}/_{16}$ in. Diameter and Smaller (Without Drive Holes) 7
9 Hole Saw $1^{1}/_{4}$ in. Through $2^{7}/_{8}$ in. Diameter (With Drive Holes) 7
10 Hole Saw 3 in. Through $4^{1}/_{8}$ in. Diameter (With Drive Holes) 8
11 Hole Saw $4^{1}/_{4}$ in. Through 6 in. Diameter 8
12 Hole Saw Arbor Designations V and W 9
13 Hole Saw Arbor Designations X and Y (With Drive Pins) 9
14 Hole Saw Arbor Designations X and Y (With Drive Pins) (Alternate Style) 9

COPYRIGHT American Society of Mechanical Engineers
Licensed by Information Handling Services

15 Hole Saw Arbor Designation Z (Number 3 Morse Taper) 9
16 Type II Hole Saw With Built-In Arbor 10
17 Drive Plate for Hole Saws 3 in. Through $4^{1}/_{8}$ in. Diameter 10
18 Drive Plate for Hole Saws $4^{1}/_{4}$ in. Through 6 in. Diameter 11
19 Extension 11
20 Morse Taper Adapter 12

Tables

1 Standard Hole Saw and Arbor Sizes 4
2 Concentricity Tolerances 5
3 Maximum Tooth Crest Runout 5
4 Hole Saw Arbor Dimension 6

COPYRIGHT American Society of Mechanical Engineers
Licensed by Information Handling Services

SPECIFICATIONS FOR HOLE SAWS, HOLE SAW ARBORS, AND HOLE SAW ACCESSORIES

1 SCOPE

This Standard provides a useful criterion of practice in the production, distribution, and use of high-speed steel, grit edge, and carbide-tipped nonadjustable hole saws and their accessories.

This Standard covers definitions, standard sizes, dimensions, tolerances, tooth configuration, and quality requirements for the hole saws and their accessories covered by this Standard.

2 DEFINITIONS

blade: that part of the hole saw which is affixed to the cap and is comprised of the cylindrical body and teeth.

body: that part of the blade between the bottom of the gullet and cap (see Fig. 1).

built-in arbor: an arbor that is fabricated integrally with the cap of the hole saw.

cap (sometimes called a cup): the component to which the arbor is attached to drive the hole saw blade.

cutting depth: the overall distance between the point of the tooth or grit and the edge or lip of the cap nearest the teeth.

cutting edge: that edge of the face of the tooth which is intended to perform cutting. It is formed by the intersection of the flank and the face (see Fig. 6). (See para. 4.1.5 for exceptions.)

direction of rotation: looking at a hole saw from the threaded end (opposite the teeth), the saw shall be rotated in a clockwise direction.

explanatory information: when provided in this Standard, it will be identified as such and is not part of the Standard. It will be used to help clarify the various facets of the Standard.

gullet: the space between teeth points that permits chip removal (see Fig. 6).

kerf: the width of cut produced by the overall set of the teeth (see Fig. 5).

saw diameter: the diameter of a saw shall be determined by measuring at the outer limits of the set of the teeth or grit, rather than at the body of the blade.

shall: to be understood as mandatory.

should: to be understood as advisory.

tables: all tables used in this Standard are applicable to the Standard.

teeth: the serrations formed across the thickness of the blade to provide cutting edges (see Fig. 1).

thickness of the blade: the distance between the two cylindrical surfaces of the body (see Fig. 5).

tooth crest plane: the place perpendicular to the axis of the hole saw that includes the extreme point of the cutting edge.

tooth depth: the distance from the point of the tooth to the deepest portion of the gullet measured parallel to the axis of the hole saw (see Fig. 6).

tooth face: that surface of the tooth over which the chip flows (see Fig. 6).

tooth pitch: the distance between apices of adjacent teeth measured in inches. Teeth per unit length is expressed as the number of complete teeth per 1 in. length.

tooth set: the transverse projection of the teeth from the side of the blade to provide the cutting clearance.

toothed edge: the edge of the blade (or body) along which the teeth have been formed (see Fig. 1).

3 HOLE SAWS

3.1 Classifications of Hole Saws

3.1.1 Classification by Depth

(a) Shallow-depth hole saws shall be designed to cut a maximum of $\frac{1}{2}$ in.

COPYRIGHT American Society of Mechanical Engineers
Licensed by Information Handling Services

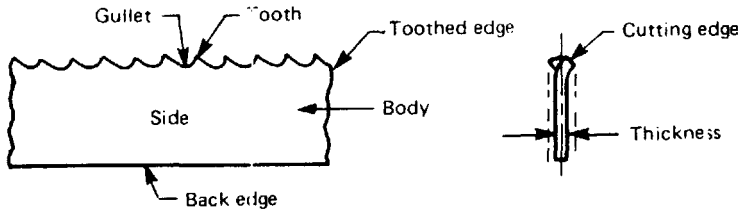

FIG. 1 BLADE CONFIGURATION

(b) Standard-depth hole saws shall be designed to cut a depth of at least $1\frac{1}{8}$ in., but less than $1\frac{3}{4}$ in. deep.

(c) Extra-depth hole saws shall be designed to cut a minimum depth of $1\frac{3}{4}$ in.

3.1.2 Classification of Type

(a) Type I hole saws shall be designed with a threaded hole in the cap into which a separate arbor may be attached.

(b) Type II hole saws shall have an integral arbor permanently attached.

3.1.3 Classification by Composition

(a) High-speed steel hole saws shall be designed with teeth formed in high-speed steel (see *teeth*, Section 2).

(b) Carbide-tipped hole saws shall be designed to have cutting edges formed of carbide.

(c) Grit-edge hole saws shall be designed with metallic or other abrasive grit bonded to the cutting edges in addition to, or instead of, formed teeth.

3.2 Limitations of Sizes

3.2.1 Chart of Standard Sizes. All hole saws covered by this Standard shall conform to dimensions shown in Table 1 for the size specified.

3.2.2 Nonstandard Sizes. Sizes and dimensions not shown in Table 1 shall be construed to be the special purpose.

3.3 Elements of the Hole Saw Blade

Figure 1 shows the configuration of the blade. It shows the cutting edge, thickness, body, gullet, tooth, side, and back edge.

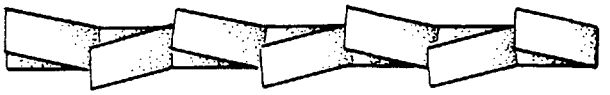

FIG. 2 ALTERNATE SET

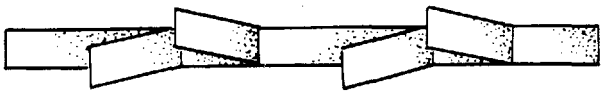

FIG. 3 RAKER SET



FIG. 4 VARIABLE RAKER TOOTH SET

3.4 Tooth Form and Set[1]

The basic types of tooth set in hole saws are shown in Figs. 2, 3, and 4. They consist of alternate set, raker set, and variable raker tooth set.

3.4.1 Tooth Set. Figure 5 depicts tooth set and overall set. It shows how the projection of the teeth from the side of the blade provides cutting clearance, and it also illustrates how the overall set determines the overall width of the cut.

3.4.2 Tooth Terminology. Figure 6 shows cutting edge, face, gullet, tooth-to-tooth pitch, body of tooth, and tooth depth.

[1] The basic types of tooth set shown in Figs. 2 and 3 depict the various sets prior to being formed into circular configurations as used in a hole saw. In Fig. 2, individual teeth are alternately set to the right and to the left. In Fig. 3, individual teeth are set one to the right, one to the left, and one unset, continuing the same sequence of settings. In Fig. 4, groups of set teeth are separated by an unset tooth. Any combination of raker and alternating sets may be used.

COPYRIGHT American Society of Mechanical Engineers
Licensed by Information Handling Services

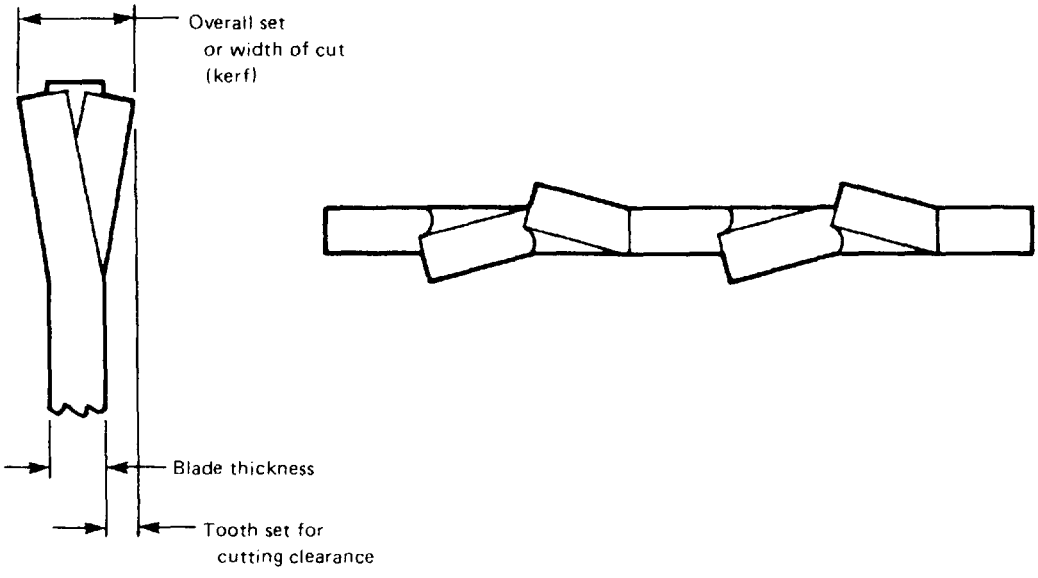

FIG. 5 TOOTH SET AND OVERALL SET

4 ELEMENTS OF THE HOLE SAW

4.1 Hole Saw Design

4.1.1 Blade and Cap Design. The hole saw shall consist of a high-speed steel tooth cutting edge blade in combination with a cap that will accept standard arbors as noted in para. 5.1 (except as specified in para. 4.1.5). Core removal holes or slots shall be provided in the blade body. The blades shall be permanently attached to the cap. Tooth set shall be sufficient to prevent body binding.

4.1.2 Heat Treatment. A composite hole saw blade consists of a high-speed steel cutting edge welded to an alloy steel back. The body, after heat treatment, shall not be harder than 52 Rockwell C (HRC).

4.1.3 Finish. Saws shall have a protective coating to prevent corrosion.

4.1.4 Screw Threads. Screw threads on hole saws shall conform to NBS H28, Screw Thread Standards for Federal Services, unless otherwise specified.

4.1.5 Alternate Cutting Edge Materials. The cutting edge may also consist of carbide tips bonded to the teeth or abrasive grit bonded to the alloy body.

4.1.6 Hole Saws $^{9}/_{16}$ in. Through $1^{3}/_{16}$ in. Diameter, Inclusive. Hole saws $^{9}/_{16}$ in. through $1^{3}/_{16}$ in. diameter, inclusive, shall be similar to that depicted in Fig. 8 and conform to the requirements of Table 1. The cap may be hexagonal or round.

4.1.7 Hole Saws $1^{1}/_{4}$ in. Through $2^{7}/_{8}$ in. Diameter, Inclusive. Hole saws $1^{1}/_{4}$ in. through $2^{7}/_{8}$ in. diameter, inclusive, shall be similar to that depicted in Fig. 9, having a minimum of two drive holes on 1 in. centers, two of which must be 180 deg apart, and shall otherwise conform to the requirements of Table 1.

4.1.8 Hole Saws 3 in. Through $4^{1}/_{8}$ in. Diameter, Inclusive. Hole saws 3 in. through $4^{1}/_{8}$ in. diameter, inclusive, shall be similar to that depicted in Fig. 10, having a minimum of four drive holes, two on 1 in. centers and two on 2 in. centers, and shall otherwise conform to the requirements of Table 1.

4.1.9 Hole Saws $4^{1}/_{4}$ in. Diameter and Larger. Hole saws $4^{1}/_{4}$ in. diameter and larger shall be similar to that depicted in Fig. 11, having a minimum of five drive holes, two on 1 in. centers and three equally spaced on a $3^{3}/_{8}$ in. diameter, and shall otherwise conform to the requirements of Table 1.

COPYRIGHT American Society of Mechanical Engineers
Licensed by Information Handling Services

TABLE 1 STANDARD HOLE SAW AND ARBOR SIZES

Hole Saw Size Outside Diameter, in.	HSS = Bi-Metal, CG = Grit Edge, CT = Carbide Tipped	Arbor Designations [Note (1)]	UNF-2A Threads [Note (2)]
9/16	HSS	V, W	1/2-20
5/8	HSS	V, W	1/2-20
11/16	HSS	V, W	1/2-20
3/4	HSS, CG, CT	V, W	1/2-20
13/16	HSS, CT	V, W	1/2-20
7/8	HSS, CG, CT	V, W	1/2-20
15/16	HSS	V, W	1/2-20
1	HSS, CG, CT	V, W	1/2-20
1 1/16	HSS, CT	V, W	1/2-20
1 1/8	HSS, CG, CT	V, W	1/2-20
1 3/16	HSS	V, W	1/2-20
1 1/4	HSS, CG, CT	X, Y	5/8-18
1 5/16	HSS	X, Y	5/8-18
1 3/8	HSS, CG, CT	X, Y	5/8-18
1 7/16	HSS	X, Y	5/8-18
1 1/2	HSS, CG, CT	X, Y	5/8-18
1 9/16	HSS	X, Y	5/8-18
1 5/8	HSS, CG, CT	X, Y	5/8-18
1 11/16	HSS	X, Y	5/8-18
1 3/4	HSS, CG, CT	X, Y	5/8-18
1 13/16	HSS	X, Y	5/8-18
1 7/8	HSS, CG, CT	X, Y	5/8-18
2	HSS, CG, CT	X, Y	5/8-18
2 1/16	HSS	X, Y	5/8-18
2 1/8	HSS, CG, CT	X, Y	5/8-18
2 1/4	HSS, CG, CT	X, Y	5/8-18
2 5/16	HSS	X, Y	5/8-18
2 3/8	HSS, CG, CT	X, Y	5/8-18
2 1/2	HSS, CG, CT	X, Y	5/8-18
2 9/16	HSS	X, Y	5/8-18
2 5/8	HSS, CG, CT	X, Y	5/8-18
2 3/4	HSS, CG, CT	X, Y	5/8-18
2 7/8	HSS, CG, CT	X, Y	5/8-18
3	HSS, CG, CT	X, Y, Z	5/8-18
3 1/8	HSS	X, Y, Z	5/8-18
3 1/4	HSS, CG, CT	X, Y, Z	5/8-18
3 3/8	HSS, CG, CT	X, Y, Z	5/8-18
3 1/2	HSS, CG, CT	X, Y, Z	5/8-18
3 5/8	HSS, CG, CT	X, Y, Z	5/8-18
3 3/4	HSS, CG, CT	X, Y, Z	5/8-18
3 7/8	HSS	X, Y, Z	5/8-18
4	HSS, CG, CT	X, Y, Z	5/8-18
4 1/8	HSS, CG, CT	X, Y, Z	5/8-18
4 1/4	HSS, CT	X, Y, Z	5/8-18
4 3/8	HSS, CT	X, Y, Z	5/8-18
4 1/2	HSS, CG, CT	X, Y, Z	5/8-18
4 3/4	HSS, CT	X, Y, Z	5/8-18
5	HSS, CT	X, Y, Z	5/8-18
5 1/2	HSS, CT	X, Y, Z	5/8-18
6	HSS, CT	X, Y, Z	5/8-18

NOTES:
(1) See Table 4.
(2) Built-in arbor hole saws are used without separate arbors.

COPYRIGHT American Society of Mechanical Engineers
Licensed by Information Handling Services

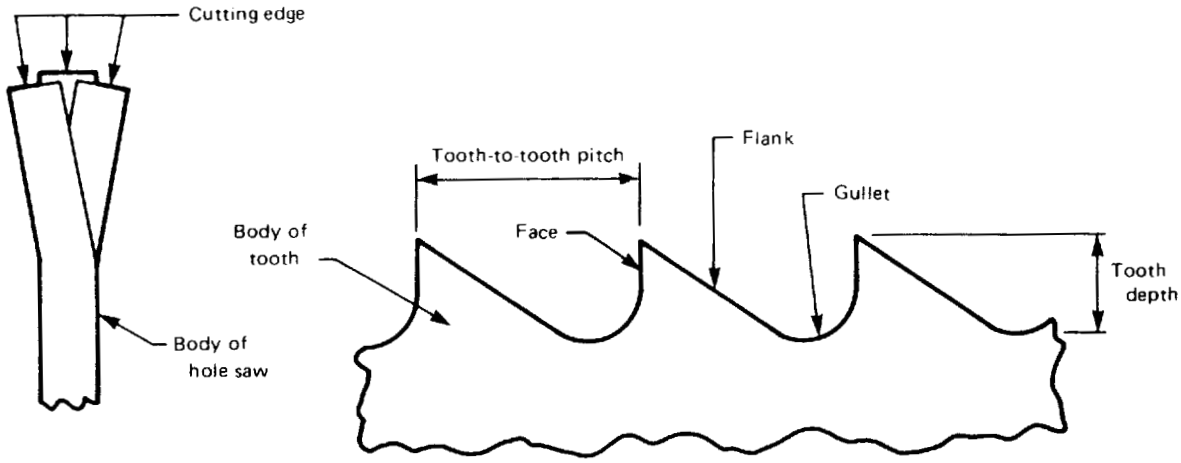

FIG. 6 TOOTH TERMINOLOGY

TABLE 2 CONCENTRICITY TOLERANCES

Saw Diameter, in.	Concentricity of Saw Body T.I.R. (Total Indicator Runout), in.
$^{9}/_{16}$–$1^{7}/_{8}$	0.030
2–$3^{7}/_{8}$	0.040
4–6	0.060

TABLE 3 MAXIMUM TOOTH CREST RUNOUT

Diameter, in.	At Longitudinal Seam, in.	Total Crest Runout, in.
$^{9}/_{16}$–$1^{7}/_{8}$	0.010	0.030
2–$3^{7}/_{8}$	0.010	0.040
4–6	0.010	0.060

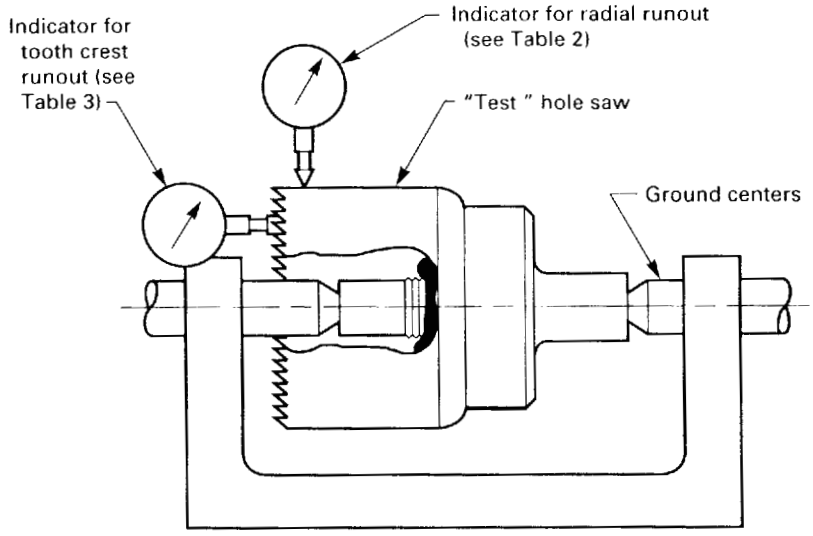

FIG. 7 JIG FOR MEASURING TOOTH CREST AND RADIAL RUNOUT

COPYRIGHT American Society of Mechanical Engineers
Licensed by Information Handling Services

TABLE 4 HOLE SAW ARBOR DIMENSION

Arbor Designation or Equivalent	Hole Saw Thread Size, *C* Class UNF-2A Thread	Shank Size Diameter or Width, Across Flats as Applicable, *A*, in.	Nominal Body Diameter, *B*, in.	Drive Pin Size, *D*, in. [Note (3)]	Pilot Drill Size, *E*, Nominal Diameter, in.
V	1/2-20 [Note (1)]	1/4 dia or hex	3/4 dia or hex	...	1/4
W	1/2-20	7/16 hex	3/4	...	1/4
X	5/8-18	7/16 hex	1 or 1 1/2 [Note (3)]	1/4	1/4
Y	5/8-18	5/8 hex [Note (2)]	1 or 1 1/2 [Note (3)]	1/4	1/4
Z	...	No. 3 Morse taper	3 15/16	5/16-18 threads	3/8 pilot pin

GENERAL NOTE: See Figs. 12, 13, and 14.

NOTES:
(1) Pilot drill may extend through arbor body and act as shank.
(2) Drive pin shall be long enough to extend at least 1/4 in. into the cap of the hole saw.
(3) See Figs. 13 and 14.

4.1.10 Type II Hole Saws. These saws are constructed with a built-in arbor, and no drive holes shall be required.

4.2 Concentricity of Hole Saws

The concentricity of hole saws shall be within the tolerances shown in Table 2. See Fig. 7 for an example for a measuring device.

4.3 Tooth Crest Uniformity

The quantitative deviation of the extreme point of the cutting edge of any tooth from the tooth crest plane shall not exceed the values in Table 3. See Fig. 7 for an example for a measuring device.

5 HOLE SAW ARBORS

5.1 Hole Saw Arbors

5.1.1 Arbor. The hole saw arbor shall be made of steel and be capable of driving the hole saw specified in para. 4.1 and Table 1 for the size specified.

5.1.2 Arbor Designations V and W. Arbors designated V and W shall be similar to that depicted in Fig. 12, and shall conform to the dimensions in Table 4.

5.1.3 Arbor Designations X and Y. Arbors designated X and Y shall be similar to those depicted in Figs. 12, 13, and 14, and shall conform to the dimensions in Table 4.

5.1.4 Arbor Designation Z. Arbors designated Z shall be similar to that depicted in Fig. 15, and shall conform to the dimensions in Table 4.

5.1.5 Built-in Arbor. Built-in arbor hole saws shall have a shank welded or otherwise permanently affixed to the cap of the hole saw, and contain a concentric pilot drill hole. These saws shall be similar to that depicted in Fig. 16, and shall conform to the dimensions in Table 4.

5.2 Pilot Drill

The pilot drill shall be a high-speed steel twist drill, shall be fixed in the arbor, shall contain a means to secure the point of the drill such that it extends beyond the cutting edge of the saw, and shall provide positive drive between the arbor and the drill.

Carbide hole saws may use a carbide-tipped drill in place of a high-speed steel drill.

6 HOLE SAW ACCESSORIES

6.1 Drive Plates

Drive plates may be used between the hole saw and hole saw arbor to distribute driving torque. Drive plates shall be similar to those shown in Figs. 17 and 18.

6.2 Extensions

Extensions shall be similar to that shown in Fig. 19.

6.3 Morse Taper Adapters

Morse taper adapters shall be similar to that shown in Fig. 20.

COPYRIGHT American Society of Mechanical Engineers
Licensed by Information Handling Services

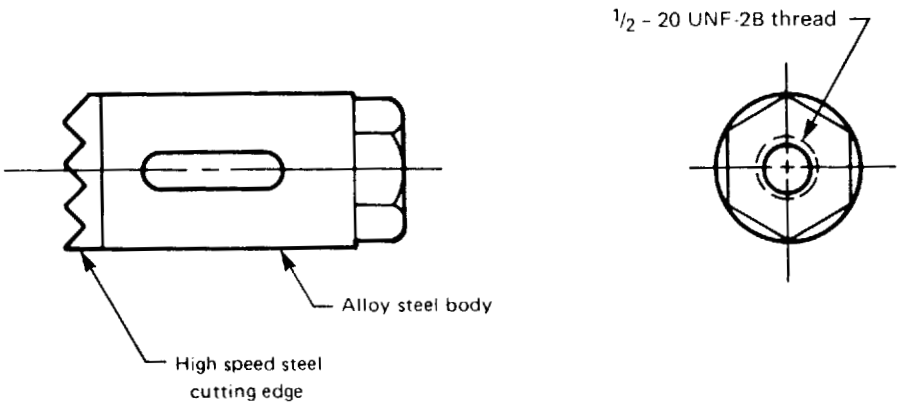

FIG. 8 HOLE SAW $1\frac{3}{16}$ in. DIAMETER AND SMALLER (WITHOUT DRIVE HOLES)

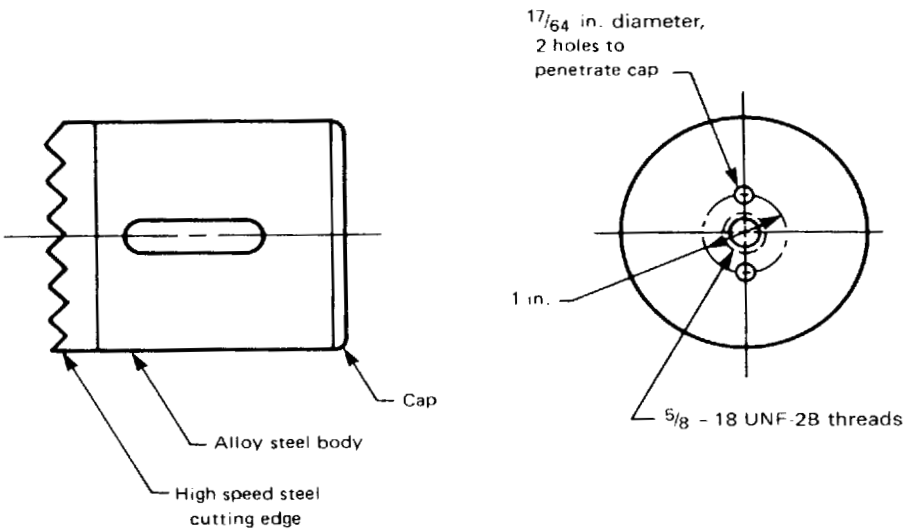

GENERAL NOTE: This figure is for reference only.

FIG. 9 HOLE SAW $1\frac{1}{4}$ in. THROUGH $2\frac{7}{8}$ in. DIAMETER (WITH DRIVE HOLES)

COPYRIGHT American Society of Mechanical Engineers
Licensed by Information Handling Services

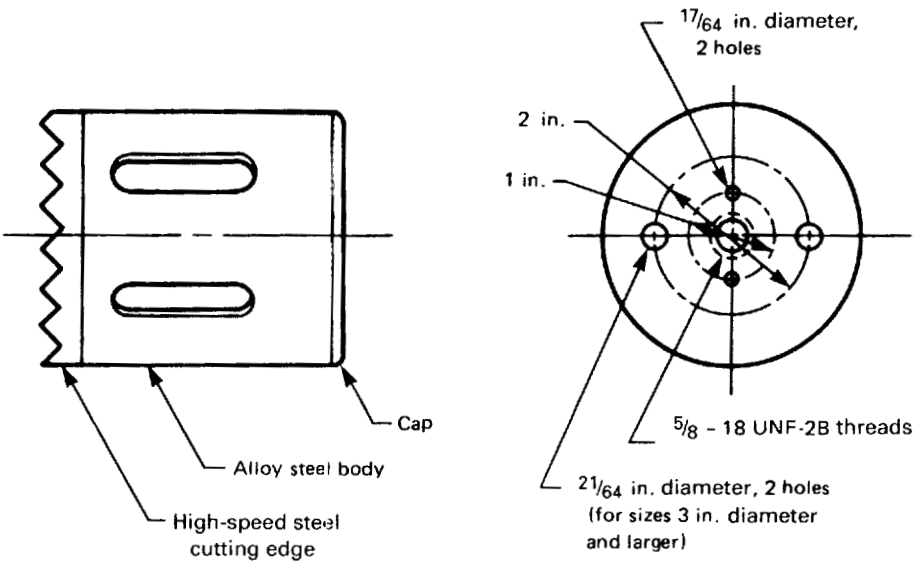

GENERAL NOTE: This figure is for reference only.

FIG. 10 HOLE SAW 3 in. THROUGH 4 1/8 in. DIAMETER (WITH DRIVE HOLES)

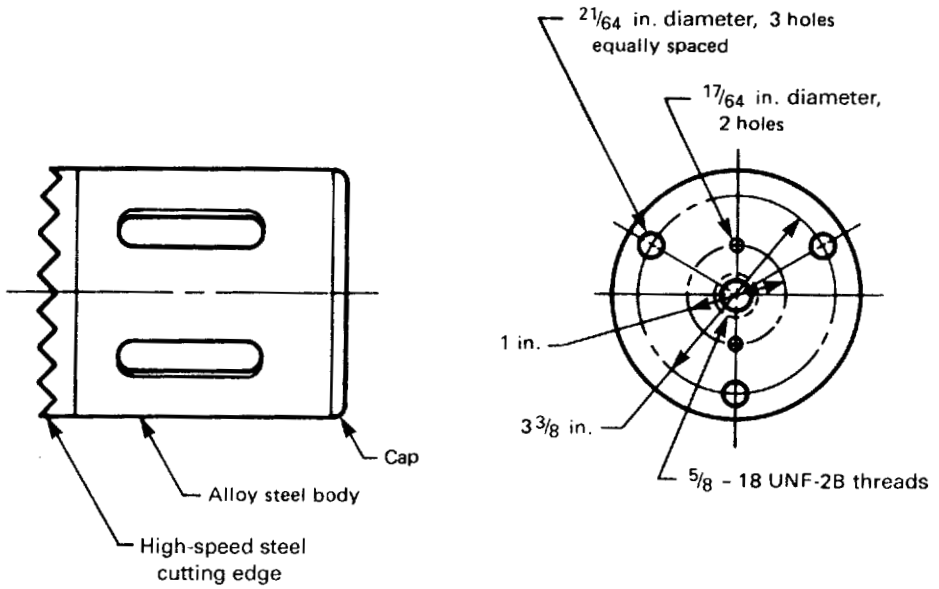

GENERAL NOTE: This figure is for reference only.

FIG. 11 HOLE SAW 4 1/4 in. THROUGH 6 in. DIAMETER

COPYRIGHT American Society of Mechanical Engineers
Licensed by Information Handling Services

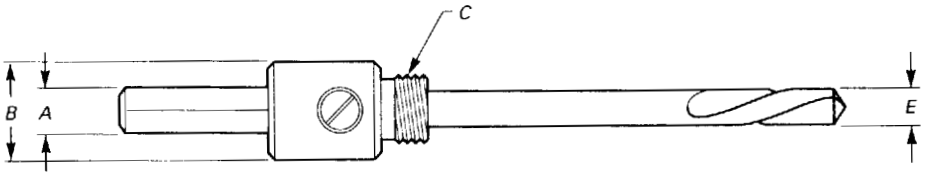

FIG. 12 HOLE SAW ARBOR DESIGNATIONS V AND W

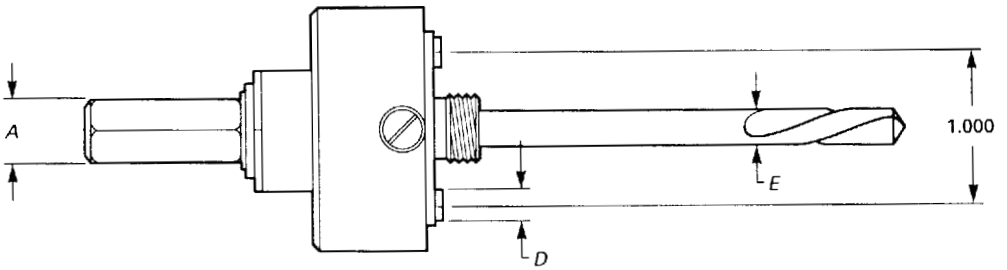

FIG. 13 HOLE SAW ARBOR DESIGNATIONS X AND Y (WITH DRIVE PINS)

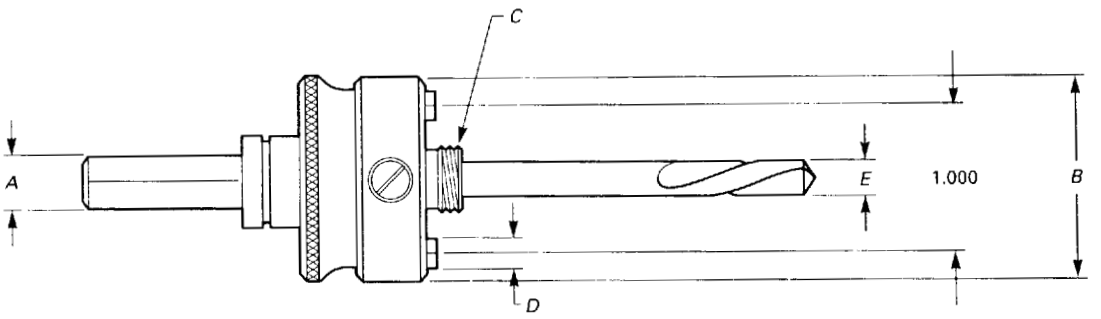

FIG. 14 HOLE SAW ARBOR DESIGNATIONS X AND Y (WITH DRIVE PINS) (ALTERNATE STYLE)

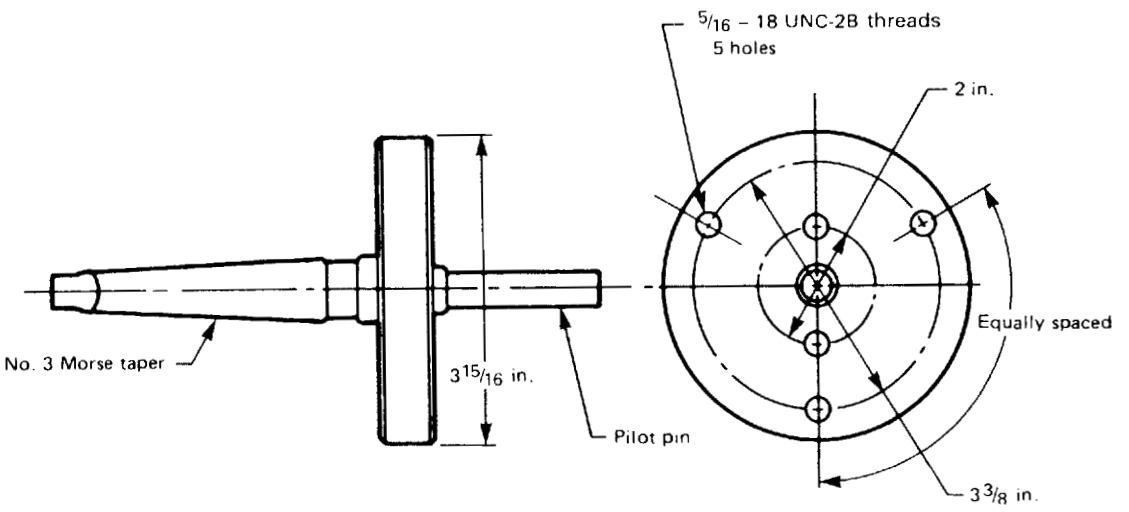

FIG. 15 HOLE SAW ARBOR DESIGNATION Z (NUMBER 3 MORSE TAPER)

COPYRIGHT American Society of Mechanical Engineers
Licensed by Information Handling Services

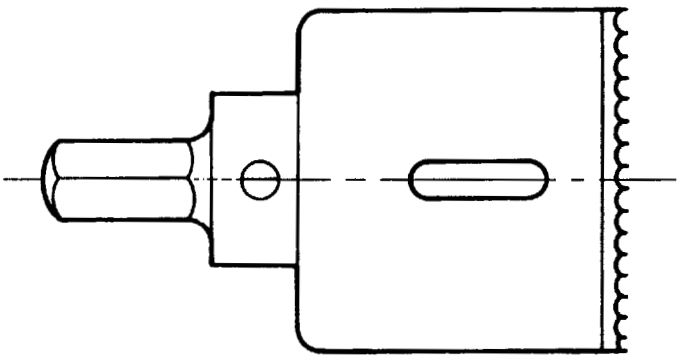

FIG. 16 TYPE II HOLE SAW WITH BUILT-IN ARBOR

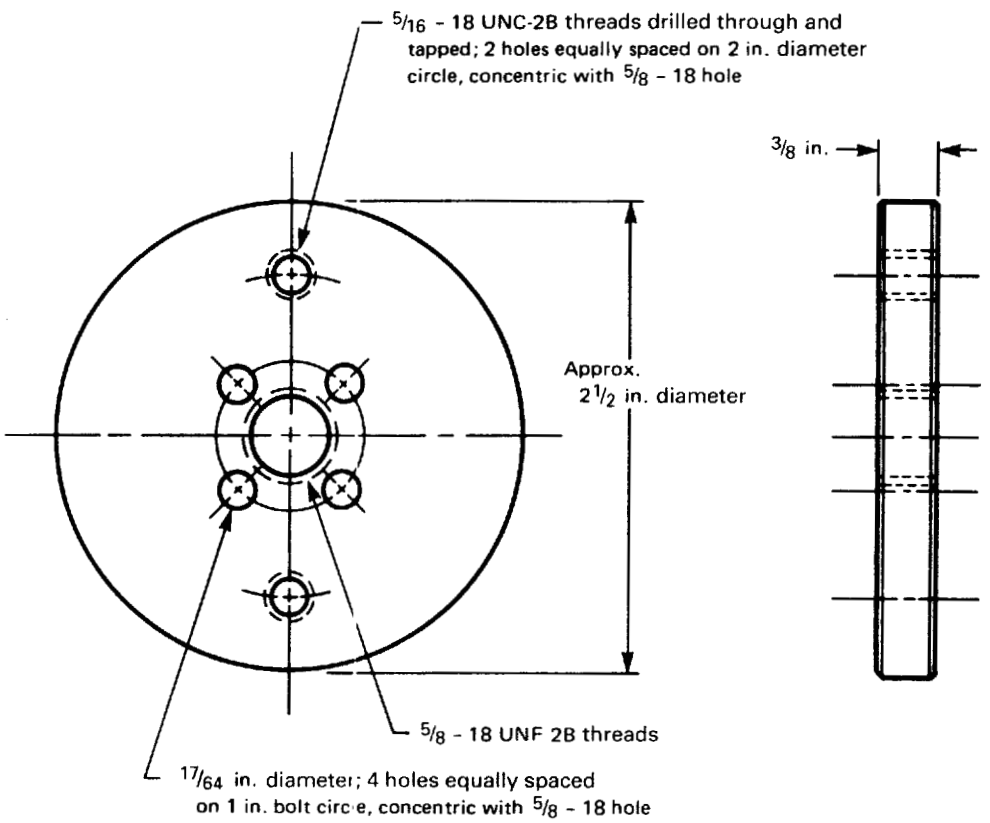

FIG. 17 DRIVE PLATE FOR HOLE SAWS 3 in. THROUGH $4\frac{1}{8}$ in. DIAMETER

COPYRIGHT American Society of Mechanical Engineers
Licensed by Information Handling Services

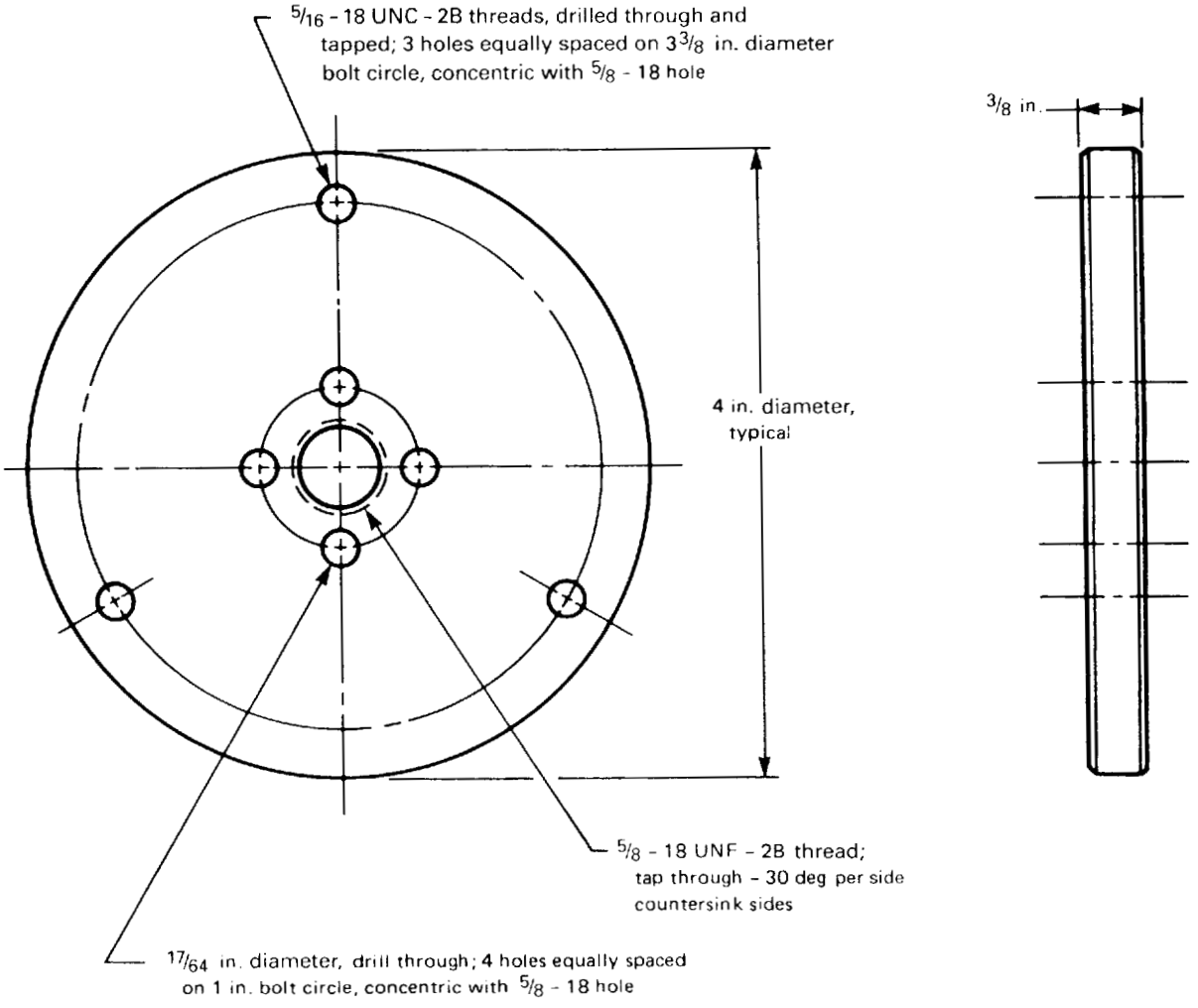

FIG. 18 DRIVE PLATE FOR HOLE SAWS 4 1/4 in. THROUGH 6 in. DIAMETER

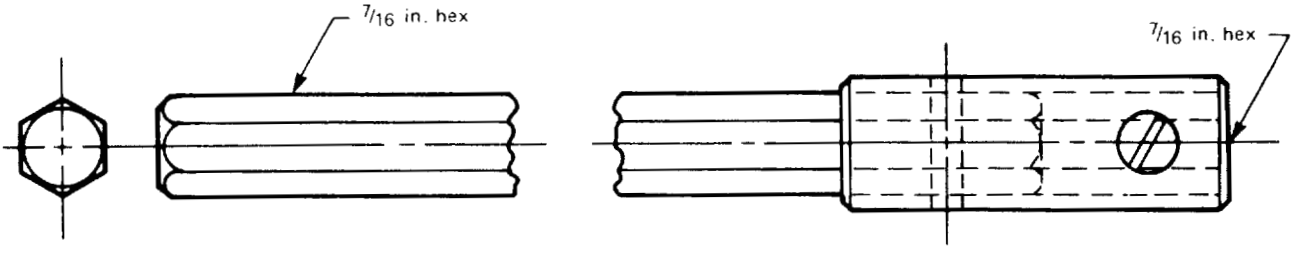

GENERAL NOTE: This figure is for reference only.

FIG. 19 EXTENSION

COPYRIGHT American Society of Mechanical Engineers
Licensed by Information Handling Services

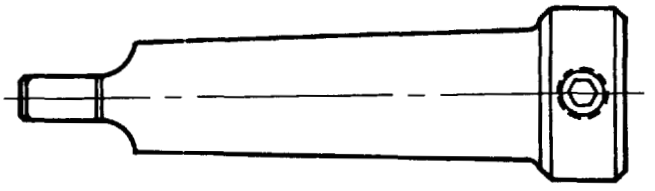

FIG. 20 MORSE TAPER ADAPTER

COPYRIGHT American Society of Mechanical Engineers
Licensed by Information Handling Services