ASME B94.50 75 ■ 0759670 0048519 2 ■ M-25-01

AMERICAN NATIONAL STANDARD

Basic Nomenclature and Definitions for Single-Point Cutting Tools

ANSI B94.50 - 1975

SECRETARIAT

THE AMERICAN SOCIETY OF MECHANICAL ENGINEERS

PUBLISHED BY

THE AMERICAN SOCIETY OF MECHANICAL ENGINEERS

United Engineering Center 345 East 47th Street New York, N. Y. 10017

Copyright ASME International
Provided by IHS under license with ASME
No reproduction or networking permitted without license from IHS

Not for Resale

0142

No part of this document may be reproduced in any form, in an electronic retrieval system or otherwise, without the prior written permission of the publisher.

Copyright © 1976 by
THE AMERICAN SOCIETY OF MECHANICAL ENGINEERS
All Rights Reserved
Printed in U.S.A.

Copyright ASME International
Provided by IHS under license with ASME
No reproduction or networking permitted without license from IHS

Not for Resale

FOREWORD

Technical Committee 2 on Tool Holder Shanks and Tool Post Openings was established under ASA Sectional Committee B5 on Small Tools and Machine Tool Elements in January 1926. In December 1946 it absorbed Technical Committee 19 on Single-Point Cutting Tools and its name was changed to Technical Committee 2 on Single-Point Tools and Tool Posts. This committee developed American Standard Single-Point Tools and Tool Posts (ASA B5.22-1950), Section 1 of which covered terminology and definitions for single-point cutting tools. Late in 1955, Technical Committee 2 was subdivided into Groups A, B, and C, with Group C being responsible for nomenclature of Single-Point Tools. This Group became Technical Com Committee 16 on Nomenclature of Single-Point Tools in 1957, but remained inactive until January, 1962, when work on formulation of the present standard, as a revision of Section 1 of ASA B5.22-1950, was started. Later in 1962, ASA Sectional Committee B94 on Cutting Tools, Holders, Drivers, and Bushings was formed as an off-spring of Committee B5, and TC16 was included in its area of responsibility. In 1963, B94 Technical Committees were renumbered and TC16 became TC3. At the same time, its scope was broadened to cover "nomenclature of edges, faces, tool angles and their reference system, working angles and their reference system, for the working parts of cutting tools" and the name of the committee was changed to Technical Committee 3 on Basic Nomenclature of Cutting Tools. However, the committee decided to first complete the task of preparing a standard for single-point tools before proceeding to develop one applicable to all types of metal cutting tools. It is now undertaking preparation of the more general standard.

In September 1960, Technical Committee 29 of the International Standards Organization (ISO) had established Working Group 20 on Geometry of the Active Parts of Cutting Tools and this group became active in December 1962. Earlier in 1962, TC16 had begun cooperation with the committee dealing with cutting tool nomenclature of the British Standards Institution, to provide for harmonization of the U.S. and British efforts in this field. The United States agreed to participate in the ISO project and to be represented by members of TC16, or, on occasions when that was not possible, by the British delegation. The present standard is therefore the result of working closely with both ISO TC29 Working Group 20 and the British committee. It includes material which has already been the subject of international agreement in WG 20, set forth in Draft International standard ISO/DIS 3002. It also anticipates formal international agreement on various further aspects of the nomenclature and definitions. Some of these aspects will be dealt with in future revisions of this standard. However, it specifically omits nomenclature and definitions concerning the orientation and setting of the cutting tool in the machine tool (setting angles, etc.) since no international agreement on this subject has yet been reached. This subject will be included in later revisions of this standard when international agreement is arrived at.

To reach international agreement on all the aspects of nomenclature and definitions, some changes from accepted usage in the United States have been unavoidable. However, these changes have been small. It will be found that the agreement between this text and that of the corresponding British (draft) standard is very close.

This Standard was approved by the American National Standards Institute on October 10, 1975.

Copyright ASME International
Provided by IHS under license with ASME
No reproduction or networking permitted without license from IHS
Not for Resale

AMERICAN NATIONAL STANDARDS COMMITTEE B94
Standardization of Cutting Tools, Holders, Drivers and Bushings

(The following is the roster of the committee at the time of the approval of the standard)

OFFICERS

Harry McLinden, *Chairman* **A. M. Mezey,** *Vice-Chairman*
Kurt Wessely, *Secretary*

STANDARDS COMMITTEE

AMERICAN GEAR MANUFACTURERS ASSOCIATION, THE
P. M. Dean, Jr., Mechanical Technology, Inc., Latham, New York
G. L. Scott, Alternate, American Gear Manufacturer's Association, Washington, D.C.

AMERICAN SOCIETY OF MECHANICAL ENGINEERS, THE
M. E. Merchant, Cincinnati Milacron, Inc., Cincinnati, Ohio
G. M. Monacelli, General Electric Company, Detroit, Michigan
C. J. Oxford, Jr., National Twist Drill & Tool Company, Rochester, Michigan
G. F. Wilson, Alternate, Consultant, Wheeling, Illinois

CEMENTED CARBIDE PRODUCERS ASSOCIATION
W. E. Montgomery, Firth Sterling, Inc., McKeesport, Pennsylvania
A. P. Wherry, Alternate, Cemented Carbide Producers Association, Cleveland, Ohio

GENERAL SERVICES ADMINISTRATION
W. R. Wacker, General Services Administration, Washington, D.C.

HACK & BAND SAW MANUFACTURERS ASSOCIATION OF AMERICA
Richard Schrade, Clemson Bros., Inc., Middletown, New York
J. E. Bates, Alternate, Hack & Band Saw Manufacturers Association, Mt. Prospect, Illinois

METAL CUTTING TOOL INSTITUTE
W. A. Wagner, Cleveland Twist Drill Company, Cleveland, Ohio
R. M. Byrne, Alternate, Metal Cutting Tool Institute, New York, New York

NATIONAL ASSOCIATION OF PUNCH MANUFACTURERS
R. E. Smith, Dayton Progress Corporation, Dayton, Ohio

NATIONAL BUREAU OF STANDARDS
J. R. Pidgeon, National Bureau of Standards, Washington, D.C.

NATIONAL MACHINE TOOL BUILDERS' ASSOCIATION
G. F. Wilson, Consultant, Wheeling, Illinois
E. J. Loeffler, Alternate, National Machine Tool Builders' Association, McLean, Virginia

SOCIETY OF AUTOMOTIVE ENGINEERS
To be appointed

SOCIETY OF CARBIDE ENGINEERS
C. H. Lang, c/o Society of Carbide Engineers, Bridgeville, Pennsylvania

SOCIETY OF MANUFACTURERS ENGINEERS
K. A. Lundell, The Producto Machine Company, Jamestown, New York
H. J. Moffatt, Bartonville, Illinois
W. N. Moore, The Ford Motor Company, Dearborn, Michigan

Copyright ASME International
Provided by IHS under license with ASME
No reproduction or networking permitted without license from IHS
Not for Resale

TELEPHONE GROUP, THE
R. A. Agnew, Western Electric Company, Inc., Chicago, Illinois
S. P. Rogacki, Alternate, Western Electric Company, Inc., Kearney, New Jersey

U.S. DEPT. OF THE AIR FORCE
To be appointed

U.S. DEPT. OF THE ARMY
D. L. York, Liaison, General Thomas J. Rodman Lab., Rock Island, Illinois

U.S. DEPT. OF THE NAVY
J. N. Cornette, Liaison, Naval Ship Systems Command, Washington, D.C.

U.S. MACHINE SCREW BUREAU
Herman Muenchinger, Continental Screw Company, New Bedford, Massachusetts
D. E. Chase, Alternate, Continental Screw Co., New Bedford, Massachusetts

INDIVIDUAL COMPANIES
Harold Cooper, Chrysler Corporation, Detroit, Michigan
William Hofbauer, Mohawk Tools, Inc., Montpelier, Ohio
Kenneth Hull, The Ingersoll Milling Machine Company, Rockford, Illinois
A. M. Mezey, Richards Brothers Punch Company, Detroit, Michigan

INDIVIDUAL MEMBERS
Anderson Ashburn, American Machinist, New York, New York
Harry McLinden, Caterpillar Tractor Company, Peoria, Illinois

Copyright ASME International
Provided by IHS under license with ASME
No reproduction or networking permitted without license from IHS
Not for Resale

TECHNICAL COMMITTEE 3
Standardization of Basic Nomenclature for Cutting Tools

M. E. Merchant, Chairman, Director of Research Planning, Cincinnati Milacron Inc., Cincinnati, Ohio
Geoffrey Boothroyd, Professor, Department of Mechanical Engineering, University of Massachusetts, Amherst, Massachusetts
O. W. Boston, Professor, 56 Roslyn Road, Grosse Pointe Shores, Michigan
Joe H. Crawford, Group Supervisor, Standard Engineering, Sundstrand Machine Tool, Division of Sundstrand Corporation, Newburg Road, Belvidere, Illinois
Carl G. Erickson, Manager of Engineering, Cutting Tool and Gauge Division, Colt Industries, Pratt & Whitney, Inc., West Hartford, Connecticut
K. H. Moltrecht, Industrial Press Inc., 200 Madison Avenue, New York, New York
G. Monacelli, Manager, Drafting Standards and Specifications, Metallurgical Products Department, General Electric Company, 11177 East Eight Mile Road, Detroit, Michigan
LeRoy A. Taylor, General Foreman, Plant Y12, Building 9212, Union Carbide Nuclear Company, Division of Union Carbide Corp., P.O. Box Y, Oak Ridge, Tennessee
Donald W. Warren, Engineering Standards Coordinator, Kennametal Inc., Latrobe, Pennsylvania
W. E. Stephens, Union Carbide Corp., Nuclear Division, Charlotte Hall Townsite, Oak Ridge, Tennessee

CORRESPONDING MEMBERS

J. M. Galimberti, Kennametal Inc., Latrobe, Pennsylvania
W. L. Kennicott, Vice President, Kennametal Inc., Latrobe, Pennsylvania
Earl M. McCullough, Process & Tool Engineering Department, John Deere East Moline Works, East Moline, Illinois
W. E. Montgomery, Teledyne Firth Sterling, P.O. Box 700, McKeesport, Pennsylvania
C. J. Oxford, Jr., Director of Research, National Twist Drill & Tool Company, Rochester, Michigan
Robert M. Byrne, Technical Director, Metal Cutting Tool Institute, 331 Madison Ave., New York, New York

Copyright ASME International
Provided by IHS under license with ASME
No reproduction or networking permitted without license from IHS
Not for Resale

CONTENTS

Page

Section

1. Scope 1

2. Purpose 1

3. Definition of a Single-Point Tool 1

4. General Terms 1
   - 4.1 Surfaces on the Workpiece 1
   - 4.2 Tool Elements 1
   - 4.3 Tool Surfaces 1
   - 4.4 Cutting Edges 2
   - 4.5 Dimensions 3
   - 4.6 Tool and Workpiece Motions 3

5. Reference Planes 4
   - 5.1 Background Information 4
   - 5.2 Tool-in-Hand System 4
   - 5.3 Tool-in-Use System 5

6. Tool and Working Angles 5
   - 6.1 Background Information 5
   - 6.2 Tool Angles 6
   - 6.3 Working Angles 7

Tables

Table 1 Symbols for Land Widths Associated with the Face and Flanks 3

Table 2 Symbols for the Rake and Clearance on the Lands for the Major and Minor Cutting Edges 6

Figures

Figure 1 Surfaces on the Workpiece 8

Figure 2 Tool Elements, Tool Surfaces and Cutting Edges 9

Figure 3 Chip Breaker 10

Figure 4 Cutting Edges 11

Figure 5 Corner Dimensions 12

Figure 6 Tool Surfaces and Land Widths 13

Figure 7 Tool and Workpiece Motions 14

Figure 8 Tool-in-Hand Planes P_r, P_f and P_p for the Major Cutting Edge 15

Figure 9 Tool-in-Hand Planes P_r, P_s and P_n for the Major Cutting Edge 16

Copyright ASME International
Provided by IHS under license with ASME
No reproduction or networking permitted without license from IHS
Not for Resale

Page

Figures(continued)

Figure 10 Tool-in-Hand Planes P_f, P_s and P_b for the Major Cutting Edge 17
Figure 11 Tool-in-Hand Planes P'_r, P'_s and P'_n for the Minor Cutting Edge 18
Figure 12 Tool-in-Hand Planes P_r and P_f for the Major Cutting Edge of a Boring Tool 19
Figure 13 Tool-in-Hand Planes P_r and P_f for the Major Cutting Edge of a Bent-Shank Planer Undercutting Tool 20
Figure 14 Tool-in-Hand Planes P_r and P_f for the Major Cutting Edge of a Cut Off Tool 21
Figure 15 Tool-in-Hand Planes P_r and P_f for the Major Cutting Edge of a Bent-Shank Facing Tool 22
Figure 16 Tool-in-Hand Planes P_r and P_f for the Major Cutting Edge of a Roller Turning Tool 23
Figure 17 Tool-in-Use Planes P_{re}, P_{se}, P_{oe} and P_{ne} for the Major Cutting Edge 24
Figure 18 Tool-in-Use Planes P_{re}, P_{fe} and P_{pe} for the Major Cutting Edge 25
Figure 19 Tool Angles 26
Figure 20 Tool Included Angle 27
Figure 21 Tool Angles–Special Case Minor Cutting Edge Angles 28
Figure 22 Working Angles 29
Figure 23 Working Angles–Special Case Minor Cutting Edge Angles 30

Appendix

A1. Summary of Angles 31
A1.1 Tool and Workpiece Motions 31
A1.2 Tool and Working Angles 31

A2. List of Symbols 33

Copyright ASME International
Provided by IHS under license with ASME
No reproduction or networking permitted without license from IHS
Not for Resale

AMERICAN NATIONAL STANDARD

BASIC NOMENCLATURE AND DEFINITIONS FOR SINGLE-POINT CUTTING TOOLS

1. SCOPE

This American National Standard defines terms for certain basic features of single-point cutting tools; it deals with those features which are necessary to define the geometry of the cutting part.

The first main section (section 4) defines general terms applicable to single-point tools, including surfaces on the workpiece, tool elements, certain specific dimensions and tool and workpiece motions.

In the subsequent sections two systems of reference planes are defined with the aid of which so-called "tool angles" and "working angles" are defined. One system of reference planes is the "tool-in-hand system"; this is used to define the geometry of the tool so that it can be manufactured and measured. The other system of reference planes, "the tool-in-use system", is required to define the effective geometry of the tool when it is actually performing a cutting operation.

2. PURPOSE

2.1 The purpose of this standard is to provide nomenclature, symbols and definitions of basic geometrical features, including angles, of single-point cutting tools.

3. DEFINITION OF A SINGLE-POINT TOOL

3.1 A single-point tool is a cutting tool having one cutting part (4.2.3) and one shank (4.2.1). They are commonly used in lathes, turret lathes, planers, shapers, boring mills and similar machine tools.

4. GENERAL TERMS

4.1 Surfaces on the Workpiece

4.1.1 Work Surface. The surface on the workpiece to be removed by machining. (Fig. 1)

4.1.2 Machined Surface. The desired surface produced by the action of the cutting tool. (Fig. 1)

4.1.3 Transient Surface. The part of the surface which is formed on the workpiece by the cutting edge (4.4.1) and removed during the following cutting stroke, during the following revolution of the tool or workpiece or, in other cases, as for example in a thread turning operation, during the following pass of the tool. (Fig. 1)

4.2 Tool Elements

4.2.1 Shank. That part of the tool by which it is held. (Fig. 2)

4.2.2 Tool Axis. An imaginary straight line with defined geometrical relationships to the locating surfaces used for the manufacture and sharpening of the tool and for holding the tool in use. Generally, the tool axis is the center line of the tool shank (4.2.1). (Fig. 2) It is usually parallel or perpendicular to the locating surface, although it could be the center line of a conical surface as in the case of a taper shank. When not obvious, the tool axis must be defined by the designer.

4.2.3 Cutting Part (Previously known as the "tool point".) The functional part of the tool comprised of the chip producing elements. The cutting edges (4.4.1), face (4.3.1), and flank (4.3.3) are therefore elements of the cutting part. (Fig. 2)

4.2.4 Base. A flat surface on the tool shank, parallel or perpendicular to the tool reference plane (5.2.1), useful for locating or orienting the tool in its manufacture, sharpening and measurement. (Fig. 2) Not all tools have a clearly defined base.

4.2.5 Wedge. The portion of the cutting part enclosed between the face (4.3.1) and the flank (4.3.3). It can be associated with either the major or minor cutting edge (4.4.1).

4.3 Tool Surfaces

Each tool surface is provided with a symbol consisting of A with a suffix indicating the identity of the surface (e.g., A_γ, the face). When it is necessary

Copyright ASME International
Provided by IHS under license with ASME
No reproduction or networking permitted without license from IHS
Not for Resale

to distinguish clearly a surface associated with the minor cutting edge (4.4.1), the appropriate symbol bears a prime (e.g., A_α', the minor flank).

4.3.1 Face (A_γ). The surface or surfaces over which the chip flows (Fig. 2). When the face is composed of a number of surfaces inclined to one another, these are designated first face, second face, etc., starting from the cutting edge. These surfaces may be called lands and, unless otherwise specified, it is assumed that these are associated with the major cutting edge (4.4.1). Where it is necessary to distinguish the faces associated with the major and minor cutting edges (4.4.1), that part of the face which intersects the flank (4.3.3) to form the major cutting edge is called the major face and that part of the face which intersects the flank to form the minor cutting edge is called the minor face, for example, major first face, minor first face, etc.

4.3.2 Chip Breaker.

NOTE
Pending international agreement on a definition of this term, the following definition is included for guidance:

A modification of the face, to control or break the chip, consisting of either an integral groove or an integral or attached obstruction. (Fig. 3)

4.3.3 Flank (A_α). The tool surface or surfaces over which the surface produced on the workpiece passes. (Fig. 2). When the flank is composed of a number of surfaces inclined to one another, these are designated first flank, second flank, etc., starting from the cutting edge. These surfaces may be called lands and unless otherwise specified, it is assumed that these are associated with the major cutting edge (4.4.1). Where it is necessary to distinguish the flanks associated with the major and minor cutting edges (4.4.1), that part of the flank which intersects the face to form the major cutting edge is called the major flank and that part of the flank which intersects the face to form the minor cutting edge is called the minor flank, e.g. major first flank, minor first flank, etc.

4.4.1 Cutting Edge. That edge of the face which is intended to perform cutting.

The tool major cutting edge S is that entire part of the cutting edge which commences at the point where the tool cutting edge angle κ_r (6.2.5) is zero and of which at least a portion is intended to produce the transient surface (4.1.3) on the workpiece (Figs. 2 and 4). In the case of tools having a sharp corner (4.4.2) at which the value of κ_r may be considered to pass through zero, the major cutting edge commences at that corner. In the case of tools for which the value of κ_r does not decrease to zero at any point on the cutting edge, the entire cutting edge is the tool major cutting edge as, for example, in the case of a V-shaped threading tool.

The tool minor cutting edge S′ is the remainder of the cutting edge, if any, and, where present, commences at the point on the cutting edge where κ_r is zero but extends from this point in a direction away from the tool major cutting edge (Figs. 2 and 4). It is not intended to produce any of the transient surface (4.1.3) on the workpiece. Some tools may have more than one tool minor cutting edge as, for example, in the case of a cut-off tool.

The working major cutting edge S_e is that entire part of the cutting edge which commences at the point where the working cutting edge angle κ_{re} (6.3.5) is zero and of which at least a portion produces the transient surface (4.1.3) on the workpiece (Fig. 4). In the case of tools having a sharp corner (4.4.2) at which the value of κ_{re} may be considered to pass through zero, the working major cutting edge commences at that corner. In the case of tools for which the value of κ_{re} does not decrease to zero at any point on the cutting edge, the entire cutting edge is the working major cutting edge as, for example, in the case of a V-shaped threading tool.

The working minor cutting edge S_e' is the remainder of the cutting edge, if any, and, where present, commences at the point on the cutting edge where κ_{re} is zero but extends from this point in a direction away from the working major cutting edge (Fig. 4). It does not produce any of the transient surface (4.1.3) on the workpiece. Some tools may have more than one working minor cutting edge as, for example, in the case of a cut-off tool.

A distinction must be made between the tool major cutting edge and the working major cutting edge because the points at which κ_r and κ_{re} can be considered to be zero are not, in general, coincident.

4.4.2 Corner (Previously known as the "nose".) The relatively small portion of the cutting edge at the junction of the major and minor cutting edges; it may be curved, straight, or the actual intersection of these cutting edges. (Figs. 2 and 5).

4.4.3 Rounded Corner. A corner having a curved cutting edge. (Fig. 5).

4.4.4 Chamfered Corner. A corner having a straight cutting edge. (Fig. 5).

4.4.5 Selected Point on the Cutting Edge. A point selected on any part of the cutting edge in order to define, for example, the tool or working angles (6.2

Copyright ASME International
Provided by IHS under license with ASME
No reproduction or networking permitted without license from IHS
Not for Resale

or 6.3) at that point. The selected point may be on the major cutting edge or on the minor cutting edge. When the selected point is so chosen as to be on the minor cutting edge, the planes and angles associated with this point are so designated (5.1.3, 5.1.4, 6.1.4 and 6.1.5). (Figs. 7 through 23).

4.4.6 Rounded Cutting Edge. A cutting edge which is formed by a rounded transition between the face A_γ and the flank A_α.

4.5 Dimensions

4.5.1 Feed (f).

NOTE
Pending international agreement on a definition of this term, the following definition is included for guidance:

The displacement of the tool relative to the workpiece, in the direction of feed motion (4.6.3), per stroke or per revolution of the workpiece or tool.

4.5.2 Back Engagement (a_p) (Previously known as the depth of cut).

NOTE
Pending international agreement on a definition of this term, the following definition is included for guidance:

The instantaneous engagement of the tool with the workpiece, measured perpendicular to the working plane P_{fe} (5.3.2). (Fig. 4).

4.5.3 Corner Radius (r_ϵ). The nominal radius of a rounded corner (4.4.3) measured in the tool reference plane P_r (5.2.1). (Fig. 5).

4.5.4 Chamfered Corner Length (b_ϵ). The nominal length of a chamfered corner (4.4.4) measured in the tool reference plane P_r (5.2.1). (Fig. 5).

4.5.5 Land Width (b_γ and b_α). The width of a land on the major face (4.3.1) is designated by b_γ, and the width of a land on the minor face (4.3.1) is designated by b'_γ. The width of a land on the major flank (4.3.3) is designated by b_α. The identification number of the land, together with the suffix used to identify the plane of measurement, may be added if necessary, e.g., $b_{\gamma n2}$' $b_{\alpha n1}$' $b_{\alpha n2}$'. (See Fig. 6 and Table 1)

4.5.6 Rounded Cutting Edge Radius (r_n). The nominal radius of a rounded cutting edge measured in the cutting edge normal plane P_n (5.2.6).

4.6 Tool and Workpiece Motions

4.6.1 Primary Motion. (All motions, directions of motions and speeds are defined relative to the workpiece.) The main motion provided by a machine tool or manually to cause relative motion between the tool and the workpiece so that the face of the tool approaches the workpiece material. In a lathe, this motion is provided by the rotary motion of the workpiece; in a planing machine it is provided by the longitudinal motion of the table. In the case of a screw cutting operation in a lathe, the primary motion is considered to be helical rather than purely rotary. Usually, the primary motion absorbs most of the total power required to perform a machining operation.

4.6.2 Direction of Primary Motion. The direction of instantaneous primary motion of the selected point on the cutting edge (4.4.5) relative to the workpiece. (Fig. 7).

4.6.3 Feed Motion. A motion which may be provided to the tool or workpiece by a machine tool or manually which, when added to the primary motion, leads to a repeated or continuous chip removal and the creation of a machined surface with the desired geometric characteristics. This motion may proceed by steps or continuously; in either case it usually absorbs a small proportion of the total power required to perform a machining operation.

4.6.4 Direction of Feed Motion. The direction of instantaneous feed motion of the selected point on the cutting edge (4.4.5) relative to the workpiece. (Fig. 7).

Table 1, Symbols for Land Widths associated with the Face and Flanks

TOOL SURFACE	PLANE OF MEASUREMENT	FIRST LAND WIDTH	SECOND LAND WIDTH	THIRD LAND WIDTH
Face A_γ	Cutting edge normal plane P_n	$b_{\gamma n1}$	$b_{\gamma n2}$	$b_{\gamma n3}$
Flank A_α	Cutting edge normal plane P_n	$b_{\alpha n1}$	$b_{\alpha n2}$	$b_{\alpha n3}$
Minor flank A_α'	Minor cutting edge normal plane P_n'	$b_{\alpha n1}$'	$b_{\alpha n2}$'	$b_{\alpha n3}$'

Copyright ASME International
Provided by IHS under license with ASME
No reproduction or networking permitted without license from IHS
Not for Resale

4.6.5 Resultant Cutting Motion. The motion resulting from simultaneous primary motion and feed motion.

4.6.6 Resultant Cutting Direction. The direction of the instantaneous resultant cutting motion of the selected point on the cutting edge (4.4.5) relative to the workpiece. (Fig. 7).

4.6.7 Cutting Speed (v). The instantaneous velocity of the primary motion (4.6.1) of the selected point on the cutting edge (4.4.5) relative to the workpiece. (Fig. 7).

4.6.8 Feed Speed (v_f). The instantaneous velocity of the feed motion (4.6.3) of the selected point on the cutting edge (4.4.5) relative to the workpiece (Fig. 7). When the feed is intermittent, for example, in the case of a planing operation, the feed speed is not defined.

4.6.9 Resultant Cutting Speed (v_e). The instantaneous velocity of the resultant cutting motion (4.6.5) of the selected point on the cutting edge (4.4.5) relative to the workpiece. (Fig. 7).

4.6.10 Feed Motion Angle (ϕ). The angle between the directions of simultaneous feed motion (4.6.4) and primary motion (4.6.2). It is therefore measured in the working plane P_{fe} (5.3.2) (Fig. 7). In certain machining operations such as planing and shaping this angle cannot be defined.

4.6.11 Resultant Cutting Speed Angle (η). The angle between the direction of primary motion (4.6.2) and the resultant cutting direction (4.6.6). It is therefore measured in the working plane P_{fe} (5.3.2). (Fig. 7).

5. REFERENCE PLANES

5.1 Background Information.

5.1.1 Reference systems of planes are necessary for defining and specifying the angles of a cutting tool. One system (the tool-in-hand system) is needed for defining the geometry of the tool for its manufacture and measurement. A second system (the tool-in-use system) is needed for specifying the geometry of the cutting tool when it is performing a cutting operation.*

*A third reference system of planes (called the setting system) is required to define the orientation of a cutting tool with respect to the machine tool. This third reference system has still to be defined by the International Standards Organization for this purpose.

5.1.2 The planes defined in the first system are termed tool-in-hand planes; their titles, with two exceptions (5.2.2 and 5.2.6) each include the word "tool". The planes defined in the second system are termed "tool-in-use" planes; their titles, with one exception (5.3.6) all include the word "working".

5.1.3 Since the angles and other geometric features vary from point to point along the cutting edge of a tool, it is necessary to locate the reference system at whatever point one desires to be able to define the tool geometry. Each plane is therefore defined with respect to a selected point on the cutting edge (4.4.5). The title of the plane may include an indication of whether the selected point is located on the major or minor cutting edge. For example, at a selected point on the minor cutting edge the corresponding plane is termed the tool minor cutting edge plane.

5.1.4 Each plane is provided with a symbol consisting of P with a suffix indicating the plane's identity [e.g., P_s, the tool cutting edge plane (5.2.4)]. For the planes defined below, the selected point on the cutting edge is considered to be located on the major cutting edge. When it is necessary to distinguish clearly a plane passing through a selected point on the minor cutting edge, the appropriate symbol bears a prime (e.g., P_s', the tool minor cutting edge plane).

5.1.5 When the cutting edge, face or flank is curved, the tangents or tangential planes through the selected point should be used in the reference systems of planes.

5.1.6 The symbol used for a plane in the tool-in-use system bears the additional suffix "e", for "effective" [e.g., P_{se}, the working cutting edge plane (5.3.4)] to distinguish it from the corresponding tool-in-hand plane [e.g., P_s, the tool cutting edge plane (5.2.4)].

5.2 Tool-in-Hand System

5.2.1 Tool Reference Plane (P_r). A plane through the selected point on the cutting edge, so chosen as to be either parallel or perpendicular to a plane or axis of the tool convenient for locating or orienting the tool for its manufacture, sharpening or measurement.

The plane must be chosen and defined for each individual type of cutting tool so that it meets the conditions prescribed above and is generally oriented perpendicular to the assumed direction of primary motion (4.6.2). (Figs. 8, 9, 12).

For ordinary lathe, planer and shaper tools it is a

Copyright ASME International
Provided by IHS under license with ASME
No reproduction or networking permitted without license from IHS
Not for Resale

plane parallel to the base (4.2.4) of the tool. (Figs. 8, 9, 10, 11, 13 and 14).

For a vertical shank or tangential tool or for a horizontal shank planer tool it is a plane perpendicular to the tool axis (4.2.2). (Fig. 16).

5.2.2 Assumed Working Plane (P_f). A plane through the selected point on the cutting edge, perpendicular to the tool reference plane P_r and so chosen as to be either parallel or perpendicular to a plane or axis of the tool convenient for locating or orienting the tool for its manufacture, sharpening or measurement.

This plane must be chosen and defined for each individual type of cutting tool so that it meets the conditions prescribed above and is generally oriented parallel to the assumed direction of feed motion (4.6.4). (Figs. 8, 10, 12, 16).

For ordinary turning, planing, shaping, or similar tools it is a plane perpendicular to the tool axis. (Figs. 8 and 13).

For a cut-off tool and most facing tools it is a plane parallel to the tool axis. (Figs. 14 and 15).

5.2.3 Tool Back Plane (P_p). A plane through the selected point on the cutting edge and perpendicular both to the tool reference plane P_r and to the assumed working plane P_f. (Fig. 8).

5.2.4 Tool Cutting Edge Plane (P_s). A plane tangent to the cutting edge at the selected point and perpendicular to the tool reference plane P_r. (Figs. 9, 10 and 11).

5.2.5 Tool Flank Orthogonal Plane (P_b). A plane through the selected point on the cutting edge, perpendicular both to the flank A_α and to the tool reference plane P_r. (Fig. 10).

5.2.6 Cutting Edge Normal Plane (P_n). A plane perpendicular to the cutting edge at the selected point on the cutting edge. (Figs. 9 and 11).

5.3 Tool-in-Use System

5.3.1 Working Reference Plane (P_{re}). A plane through the selected point on the cutting edge and perpendicular to the resultant cutting direction (4.6.6). (Figs. 17 and 18).

5.3.2 Working Plane (P_{fe}). A plane through the selected point on the cutting edge and containing both the direction of primary motion (4.6.2) and the direction of feed motion (4.6.4). This plane is thus perpendicular to the working reference plane P_{re}. (Figs. 7 and 18).

5.3.3 Working Back Plane (P_{pe}). A plane through the selected point on the cutting edge and perpendicular both to the working reference plane P_{re} and to the working plane P_{fe}. (Fig. 18).

5.3.4 Working Cutting Edge Plane (P_{se}). A plane tangent to the cutting edge at the selected point and perpendicular to the working reference plane P_{re}. This plane thus contains the resultant cutting direction (4.6.6). (Fig. 17).

5.3.5 Working Orthogonal Plane* (P_{oe}). A plane through the selected point on the cutting edge and perpendicular both to the working reference plane P_{re} and to the working cutting edge plane P_{se}. (Fig. 17).

5.3.6 Cutting Edge Normal Plane (P_{ne}). The cutting edge normal plane in the tool-in-use system is identical with the cutting edge normal plane defined in the tool-in-hand system; $P_{ne} \equiv P_n$ (5.2.6). (Fig. 17).

6. TOOL AND WORKING ANGLES

6.1 Background Information

6.1.1 The angles are necessary for the determination of the geometrical position of the tool cutting edge, the face and the flank.

6.1.2 One set of angles is needed for defining the angles of the tool as an entity in itself, that is, for the tool-in-hand; these angles are designated tool angles and, with one exception (6.2.8), have the prefix "tool" in their titles. These angles are necessary for manufacturing, sharpening or measuring the tool.

6.1.3 A second set of angles is needed for defining the angles which affect the action of the tool in the cutting process, that is, for the tool-in-use; these angles are designated working angles and have the prefix "working" in their titles.

6.1.4 Since tool and working angles vary from point to point along the cutting edge, the definitions of the angles given below refer always to the angles at the selected point (4.4.5). When the cutting edge, face or flank is curved, the tangents or tangential planes through the selected point are employed in the reference systems of planes used to define the angles (5.1.5).

*There is some evidence that the "working orthogonal clearance" (6.3.3) is a major factor affecting the rate at which a cutting tool wears on the flank during use. This angle is therefore defined in this standard together with the plane in which it is measured.

Copyright ASME International
Provided by IHS under license with ASME
No reproduction or networking permitted without license from IHS
Not for Resale

6.1.5 Each angle is specified, where appropriate, with reference to a particular cutting edge on the tool, depending on the location of the selected point on the cutting edge. The title of the angle may include an indication of whether the selected point is located on the major or minor cutting edge. For example, at a selected point on the major cutting edge there is the tool normal rake (6.2.1) and at a selected point on the minor cutting edge, the corresponding angle is termed the tool minor cutting edge normal rake.

6.1.6 Each angle is provided with a symbol consisting of a Greek letter with a suffix indicating the plane in which the angle is measured [e.g., γ_n, the tool normal rake (6.2.1)]. For the angles defined below, the selected point on the cutting edge is considered to be located on the major cutting edge. When it is necessary to distinguish clearly angles defined with respect to a selected point on the minor cutting edge, the appropriate symbol bears a prime (e.g., γ_n', the tool minor cutting edge normal rake).

6.1.7 The symbol used for a working angle bears the additional suffix "e" for "effective", [e.g., γ_{ne}, the working normal rake (6.3.1)] to distinguish it from the corresponding tool angle [e.g., γ_n, the tool normal rake (6.2.1)].

6.1.8 When the face or flank is composed of a number of surfaces inclined to one another, these surfaces are numbered consecutively, starting from the cutting edge. The number of the land is used as an additional suffix to the appropriate symbols to associate the rake or clearance angle with its particular land (e.g., γ_{n1}, γ_{n2e}—See Table 2 and Fig. 6). When the face or flank has only one surface, the suffixes 1, 2, etc., are not used.

*A term used in Great Britain.

6.1.9 The signs of the various angles are defined, where necessary, in the appropriate figures.

6.2 Tool Angles.

The tool angles are defined with the aid of the tool-in-hand reference system of planes defined in section 5.2.

The sum of the tool normal clearance (6.2.2), the normal wedge angle (6.2.8) and the tool normal rake (6.2.1) is equal to 90°.

In practice, the tool normal rake, tool normal clearance and tool cutting edge inclination (6.2.6) are usually acute angles.

6.2.1 Tool Normal Rake (γ_n). The angle between the face A_γ and the tool reference plane P_r measured in the cutting edge normal plane P_n. (Figs. 19 and 21)

6.2.2 Tool Normal Clearance (α_n). The angle between the flank A_α and the tool cutting edge plane P_s measured in the cutting edge normal plane P_n. (Figs. 19 and 21)

6.2.3 Tool Base Clearance (α_b). The angle between the flank A_α and the tool cutting edge plane P_s measured in the tool flank orthogonal plane P_b. (Figs. 19 and 21)

6.2.4 Tool Lead Angle (Tool Approach Angle*) (ψ_r). The angle between the tool cutting edge plane P_s and the tool back plane P_p measured in the tool reference plane P_r. (Fig. 19). ψ_r is defined only for the major cutting edge.

6.2.5 Tool Cutting Edge Angle (κ_r). The angle between the tool cutting edge plane P_s and the assumed working plane P_f measured in the tool reference plane P_r (Figs. 19 and 21). Thus at any selected point on the major cutting edge the sum of ψ_r and κ_r is always 90°.

Table 2, Symbols for the Rake and Clearance on the Lands for the Major and Minor Cutting Edges

	NO LAND	WITH LANDS		
		First Face or Flank	Second Face or Flank	Third Face or Flank
Tool Normal Rake	γ_n	γ_{n1}	γ_{n2}	γ_{n3}
Tool Minor Cutting Edge Normal Rake	γ_n'	γ_{n1}'	γ_{n2}'	γ_{n3}'
Tool Normal Clearance	α_n	α_{n1}	α_{n2}	α_{n3}
Tool Minor Cutting Edge Normal Clearance	α_n'	α_{n1}'	α_{n2}'	α_{n3}'

Copyright ASME International
Provided by IHS under license with ASME
No reproduction or networking permitted without license from IHS
Not for Resale

6.2.6 Tool Cutting Edge Inclination (λ_s). The angle between the cutting edge S and the tool reference plane P_r measured in the tool cutting edge plane P_s. (Figs. 19 and 21)

6.2.7 Tool Included Angle (ϵ_r). The angle between the tool cutting edge plane P_s and the tool minor cutting edge plane P_s' measured in the tool reference plane P_r. (Fig. 20). Thus $\kappa_r + \epsilon_r + \kappa_r' = 180°$.

NOTE

This definition assumes the use of two selected points, one on the major cutting edge and one on the minor cutting edge.

6.2.8 Normal Wedge Angle (β_n). The included angle between the face A_γ and the flank A_α measured in the cutting edge normal plane P_n. (Figs. 19 and 21)

6.3 Working Angles

The working angles are defined with the aid of the tool-in-use reference system of planes specified in Section 5.3.

The sum of the working normal clearance (6.3.2), the normal wedge angle (6.3.7) and the working normal rake (6.3.1) is equal to 90°.

In practice, the working normal rake, working normal clearance and working cutting edge inclination (6.3.6) are usually acute angles.

*There is some evidence that the "working orthogonal clearance" is a major factor affecting the rate at which a cutting tool wears on the flank during use. This angle is therefore defined in this Standard together with the plane in which it is measured.

**A term used in Great Britain.

6.3.1 Working Normal Rake (γ_{ne}). The angle between the face A_γ and the working reference plane P_{re} measured in the cutting edge normal plane P_{ne} (Figs. 22 and 23). (Note that $P_{ne} \equiv P_n$)

6.3.2 Working Normal Clearance (α_{ne}). The angle between the flank $A\alpha$ and the working cutting edge plane P_{se} measured in the cutting edge normal plane P_{ne}. (Figs. 22 and 23)

6.3.3 Working Orthogonal Clearance* (α_{oe}). The angle between the flank A_α and the working cutting edge plane P_{se} measured in the working orthogonal plane P_{oe}. (Figs. 22 and 23)

6.3.4 Working Lead Angle (Working Approach Angle**) (ψ_{re}). The angle between the working cutting edge plane P_{se} and the working back plane P_{pe} measured in the working reference plane P_{re}. (Fig. 22). ψ_{re} is defined only for the major cutting edge.

6.3.5 Working Cutting Edge Angle (κ_{re}). The angle between the working cutting edge plane P_{se} and the working plane P_{fe} measured in the working reference plane P_{re}. (Figs. 22 and 23). Thus, at any selected point on the major cutting edge, the sum of κ_{re} and ψ_{re} is always 90°.

6.3.6 Working Cutting Edge Inclination (λ_{se}). The angle between the working cutting edge S_e and the working reference plane P_{re} measured in the working cutting edge plane P_{se}. (Figs. 22 and 23)

6.3.7 Normal Wedge Angle (β_{ne}). The normal wedge angle in the tool-in-use system is identical with the normal wedge angle defined in the tool-in-hand system and $\beta_{ne} \equiv \beta_n$ (6.2.8). (Fig. 22).

Copyright ASME International
Provided by IHS under license with ASME
No reproduction or networking permitted without license from IHS
Not for Resale

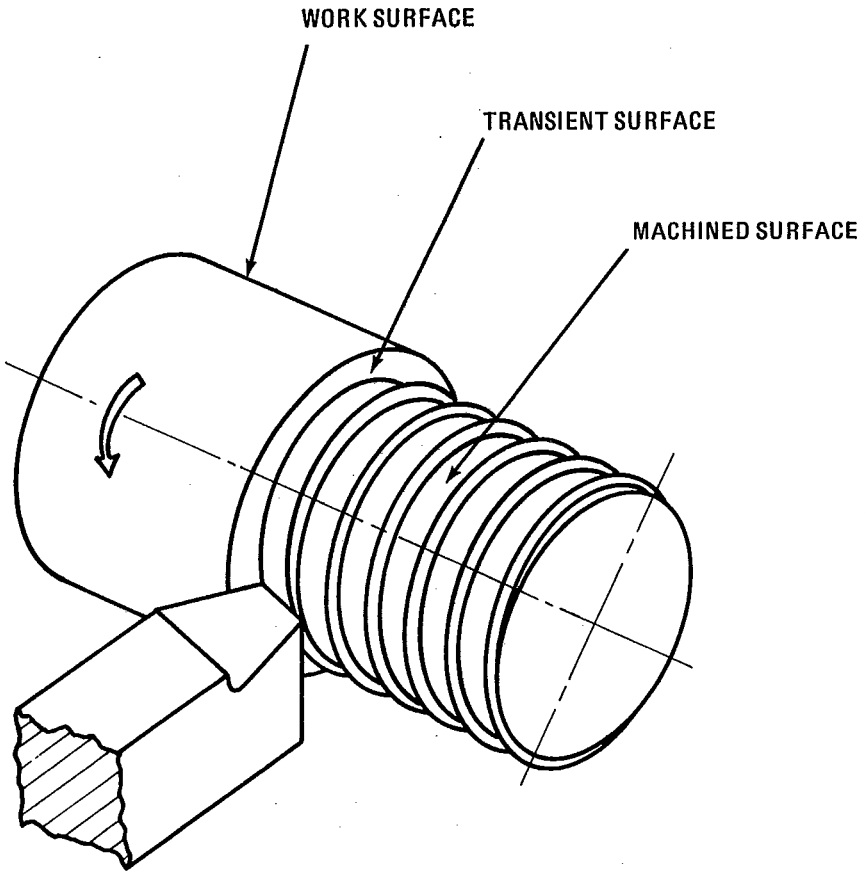

FIG. 1 SURFACES ON THE WORKPIECE

Copyright ASME International
Provided by IHS under license with ASME
No reproduction or networking permitted without license from IHS

Not for Resale

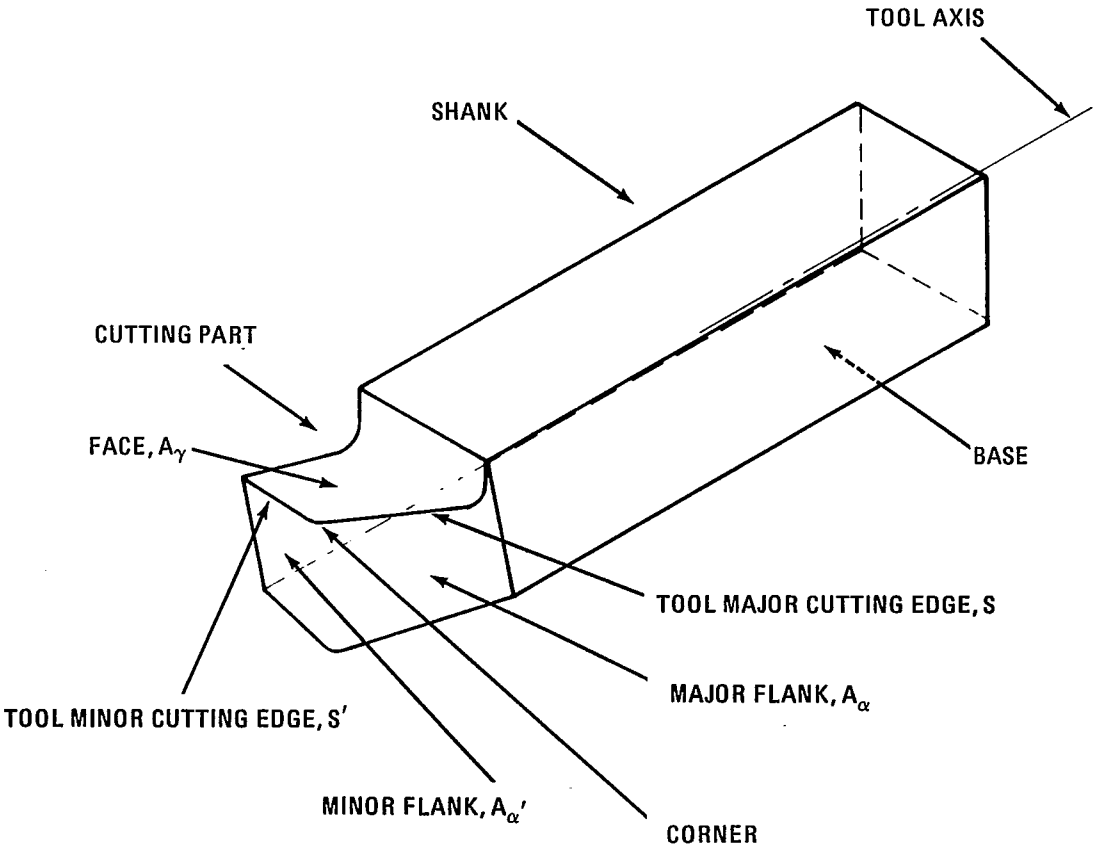

FIG. 2 TOOL ELEMENTS, TOOL SURFACES AND CUTTING EDGES

Copyright ASME International
Provided by IHS under license with ASME
No reproduction or networking permitted without license from IHS

Not for Resale

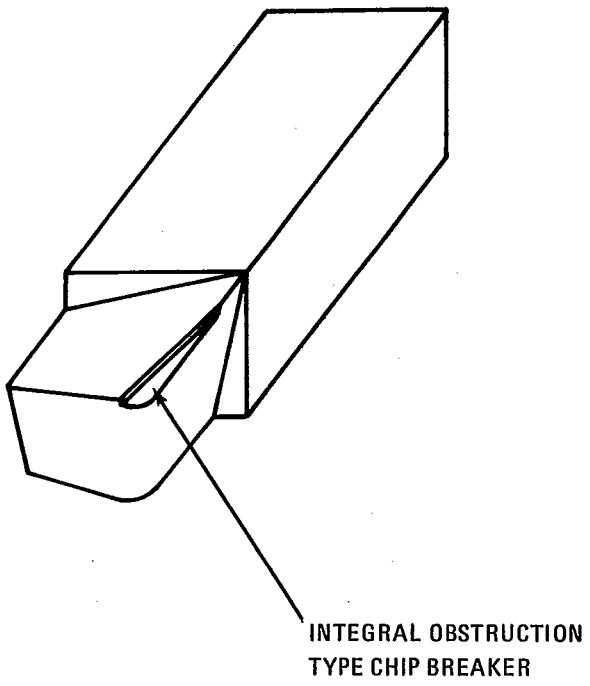

FIG. 3 CHIP BREAKER

Copyright ASME International
Provided by IHS under license with ASME
No reproduction or networking permitted without license from IHS

Not for Resale

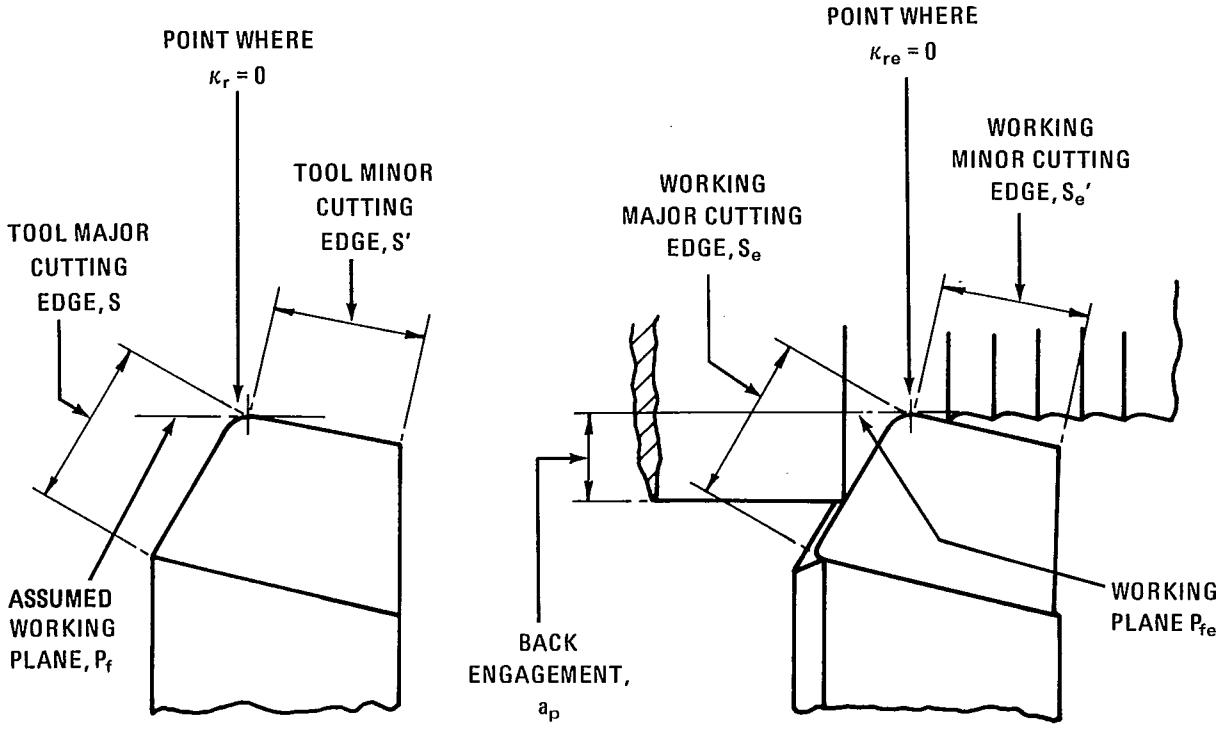

VIEW ON TOOL REFERENCE PLANE, P_r
(PARALLEL TO TOOL BASE)

VIEW ON WORKING REFERENCE PLANE, P_{re}
(PERPENDICULAR TO RESULTANT
CUTTING DIRECTION)

FIG. 4 CUTTING EDGES

Copyright ASME International
Provided by IHS under license with ASME
No reproduction or networking permitted without license from IHS

Not for Resale

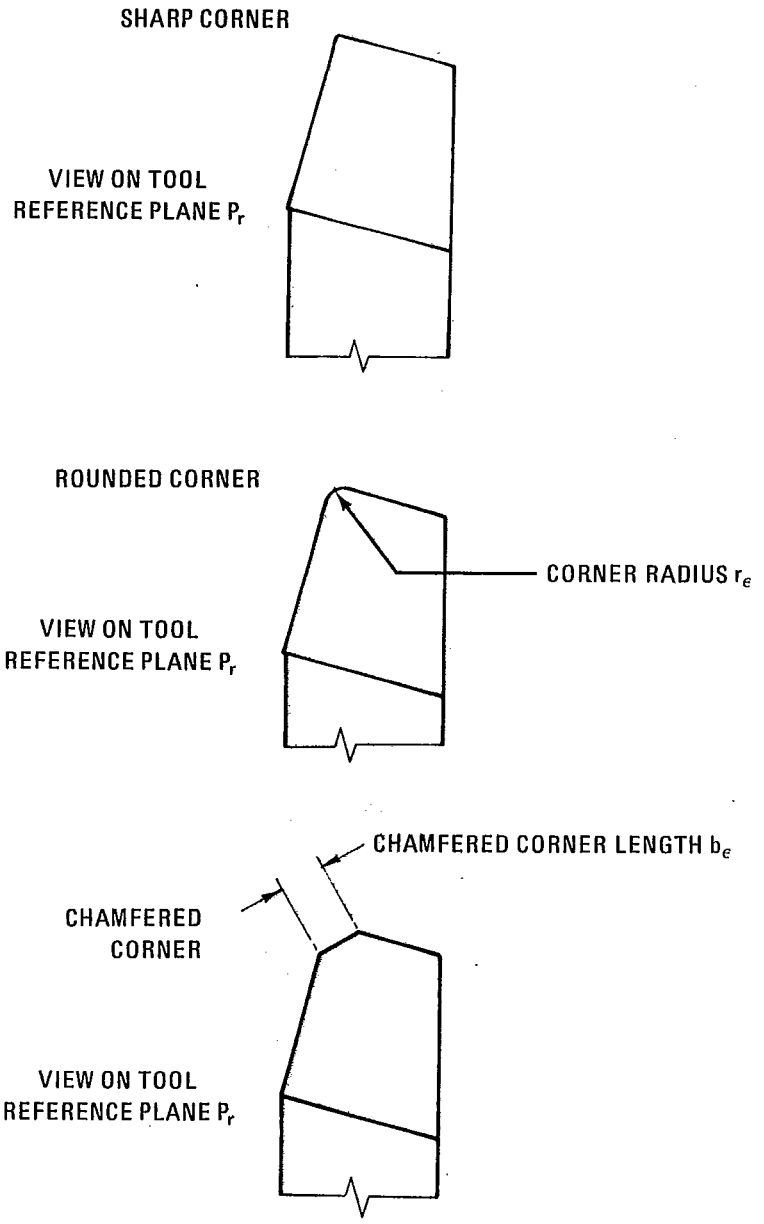

FIG. 5 CORNER DIMENSIONS

Copyright ASME International
Provided by IHS under license with ASME
No reproduction or networking permitted without license from IHS
Not for Resale

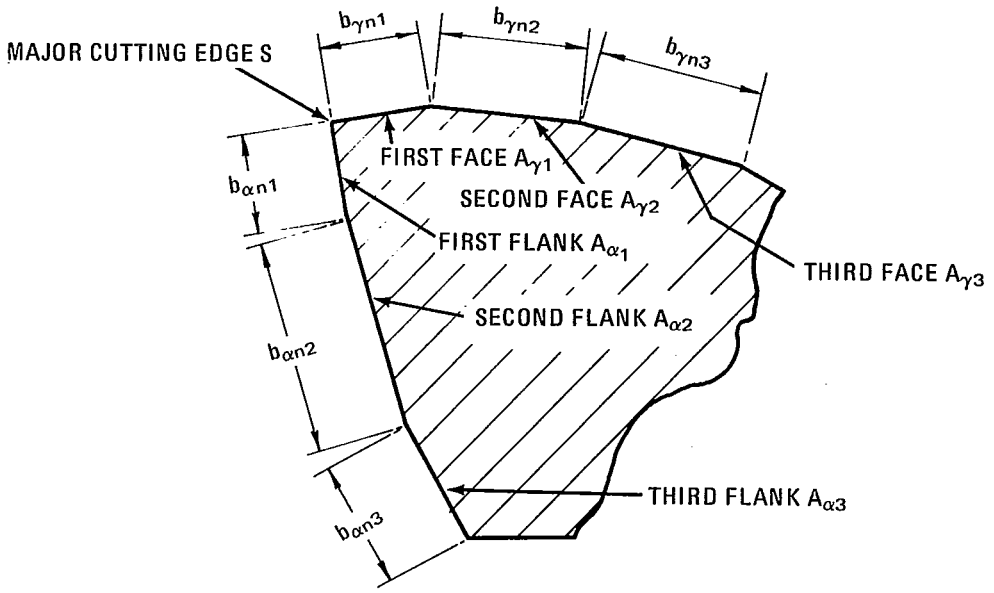

SECTIONAL VIEW ON CUTTING EDGE NORMAL PLANE P_n

FIG. 6 TOOL SURFACES & LAND WIDTHS

Copyright ASME International
Provided by IHS under license with ASME
No reproduction or networking permitted without license from IHS

Not for Resale

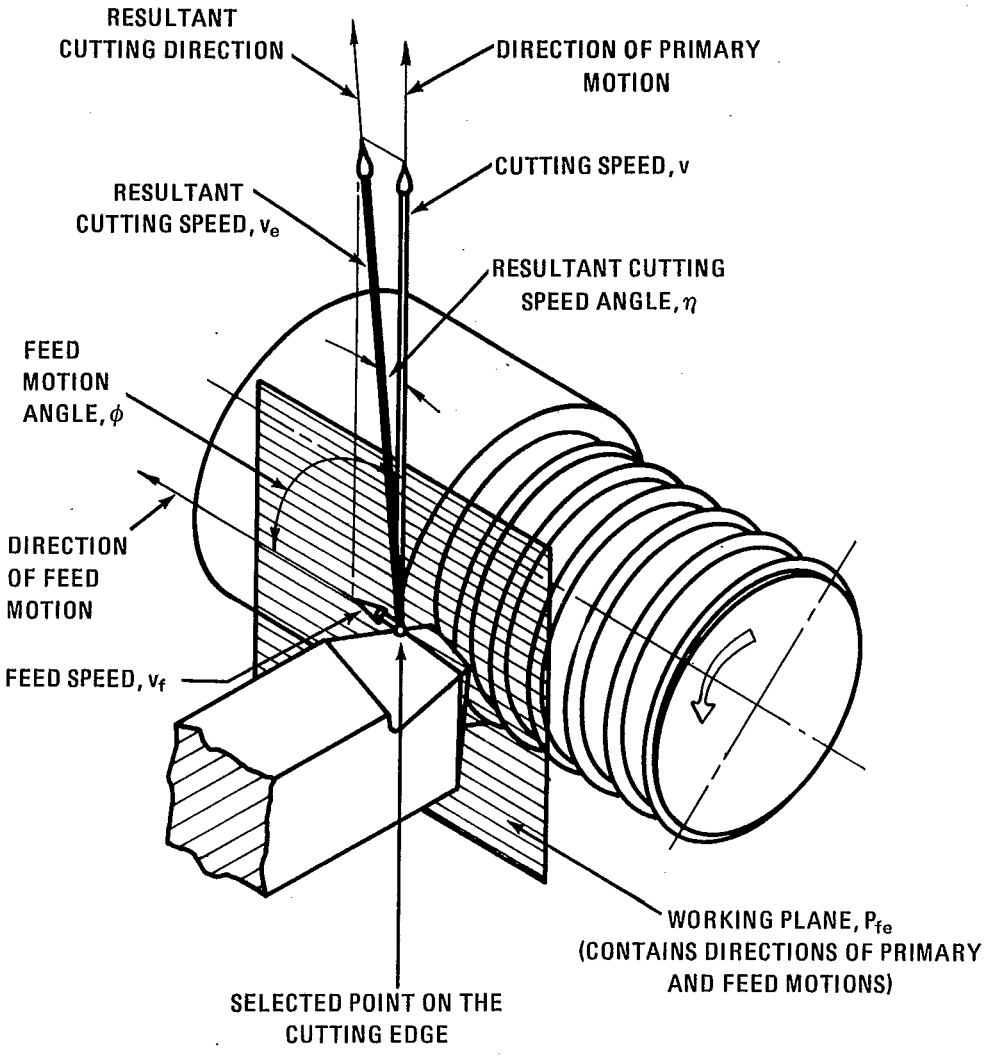

FIG. 7 TOOL AND WORKPIECE MOTIONS

Copyright ASME International
Provided by IHS under license with ASME
No reproduction or networking permitted without license from IHS
Not for Resale

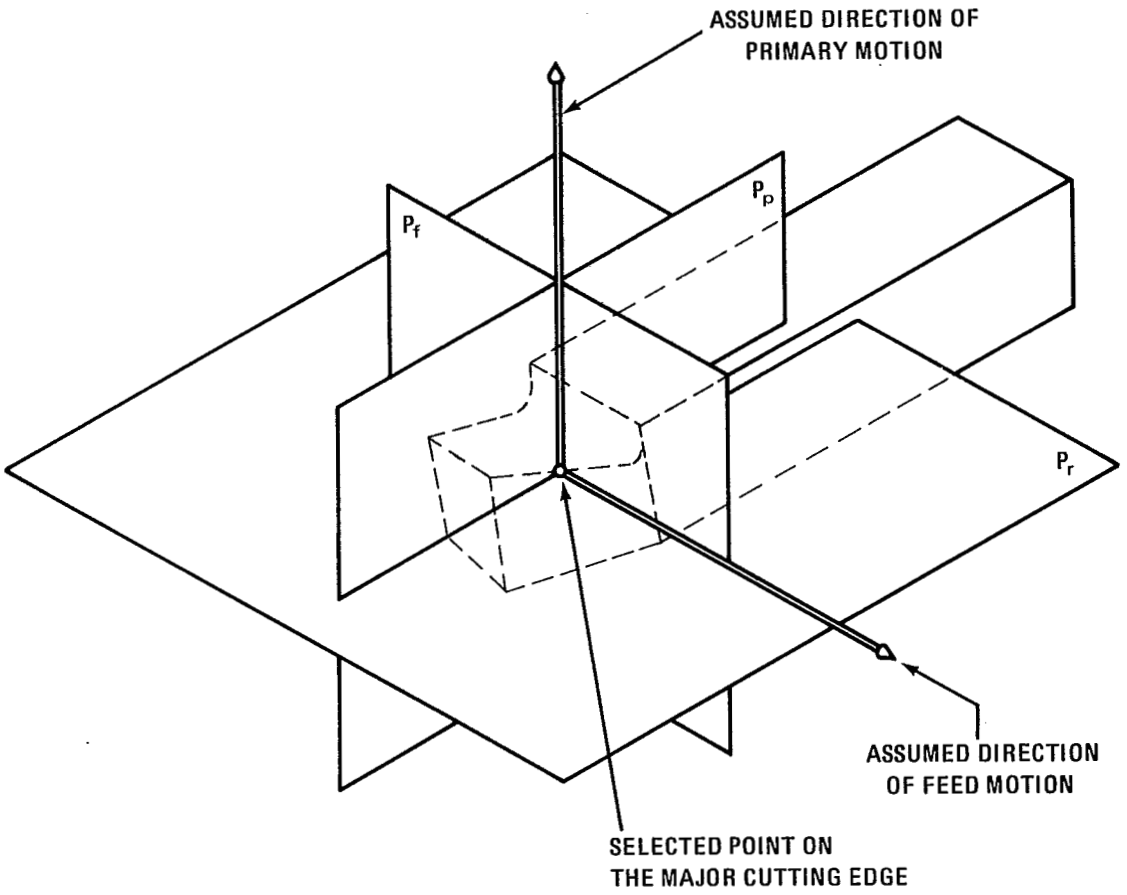

FIG. 8 TOOL-IN-HAND PLANES P_r, P_f AND P_p FOR THE MAJOR CUTTING EDGE

Copyright ASME International
Provided by IHS under license with ASME
No reproduction or networking permitted without license from IHS

Not for Resale

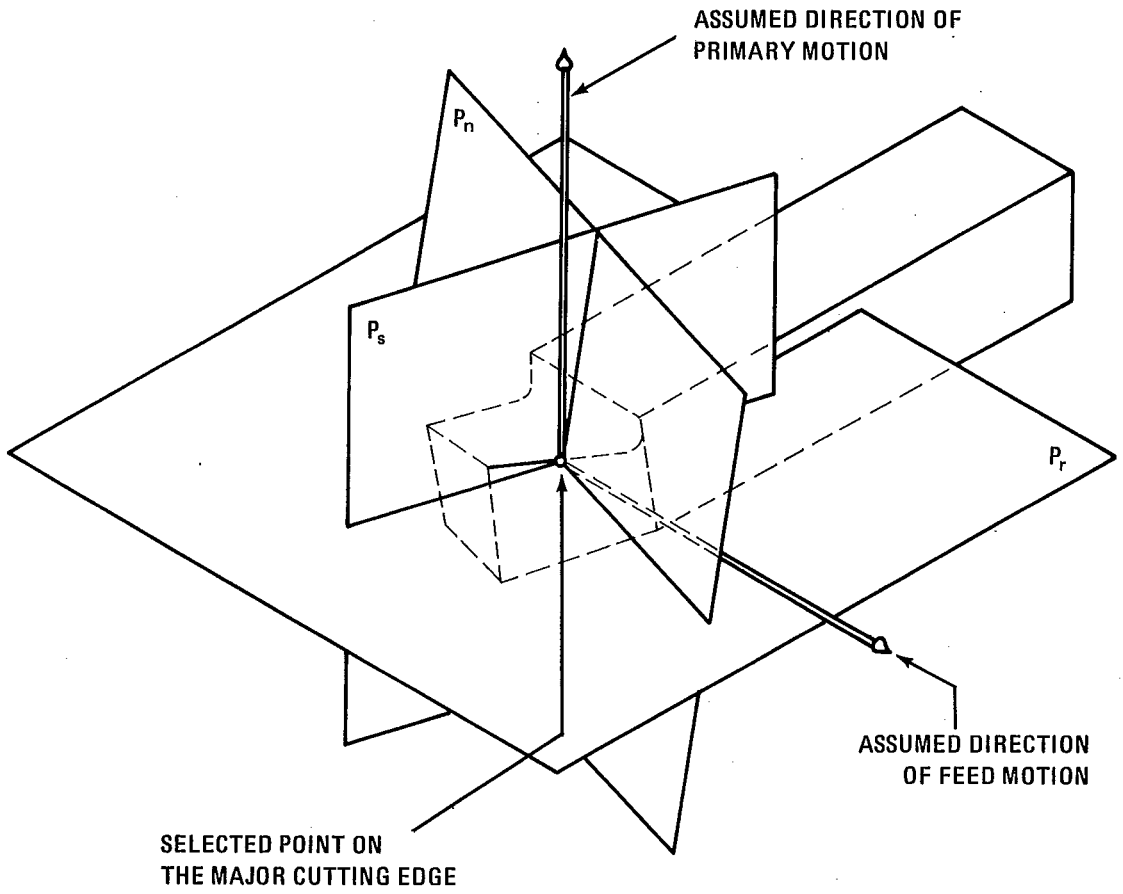

FIG. 9 TOOL-IN-HAND PLANES P_r, P_s AND P_n FOR THE MAJOR CUTTING EDGE

Copyright ASME International
Provided by IHS under license with ASME
No reproduction or networking permitted without license from IHS

Not for Resale

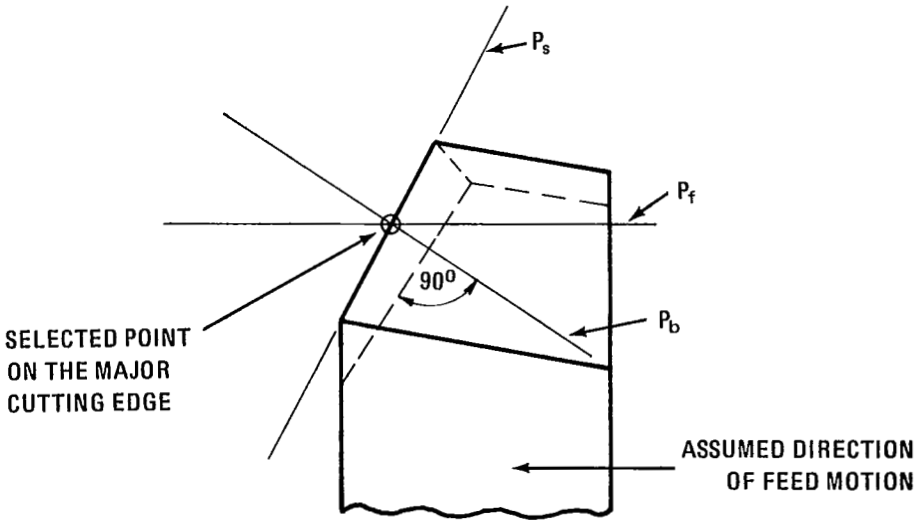

VIEW ON TOOL REFERENCE PLANE, P_r

FIG. 10 TOOL-IN-HAND PLANES P_f, P_s AND P_b
FOR THE MAJOR CUTTING EDGE

Copyright ASME International
Provided by IHS under license with ASME
No reproduction or networking permitted without license from IHS

Not for Resale

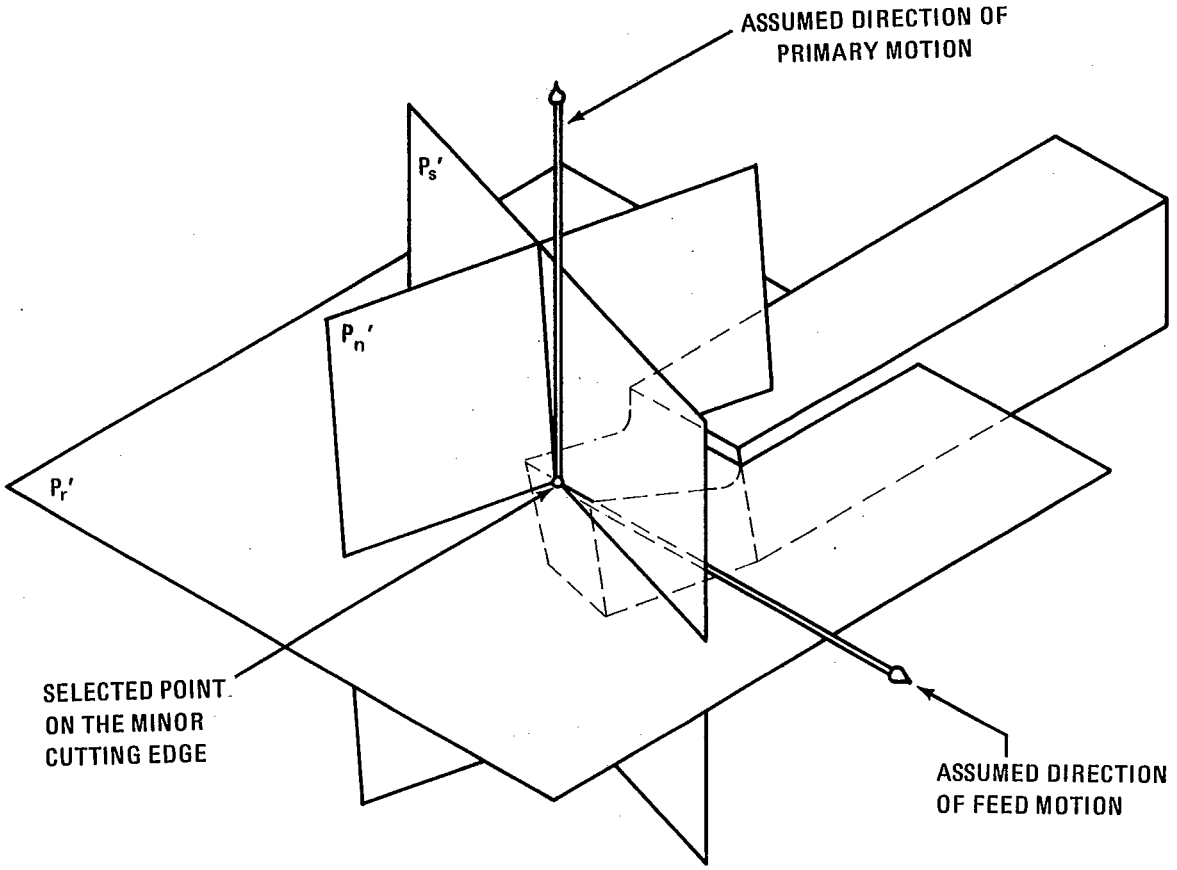

FIG. 11 TOOL-IN-HAND PLANES P_r', P_s' AND P_n' FOR THE MINOR CUTTING EDGE

Copyright ASME International
Provided by IHS under license with ASME
No reproduction or networking permitted without license from IHS

Not for Resale

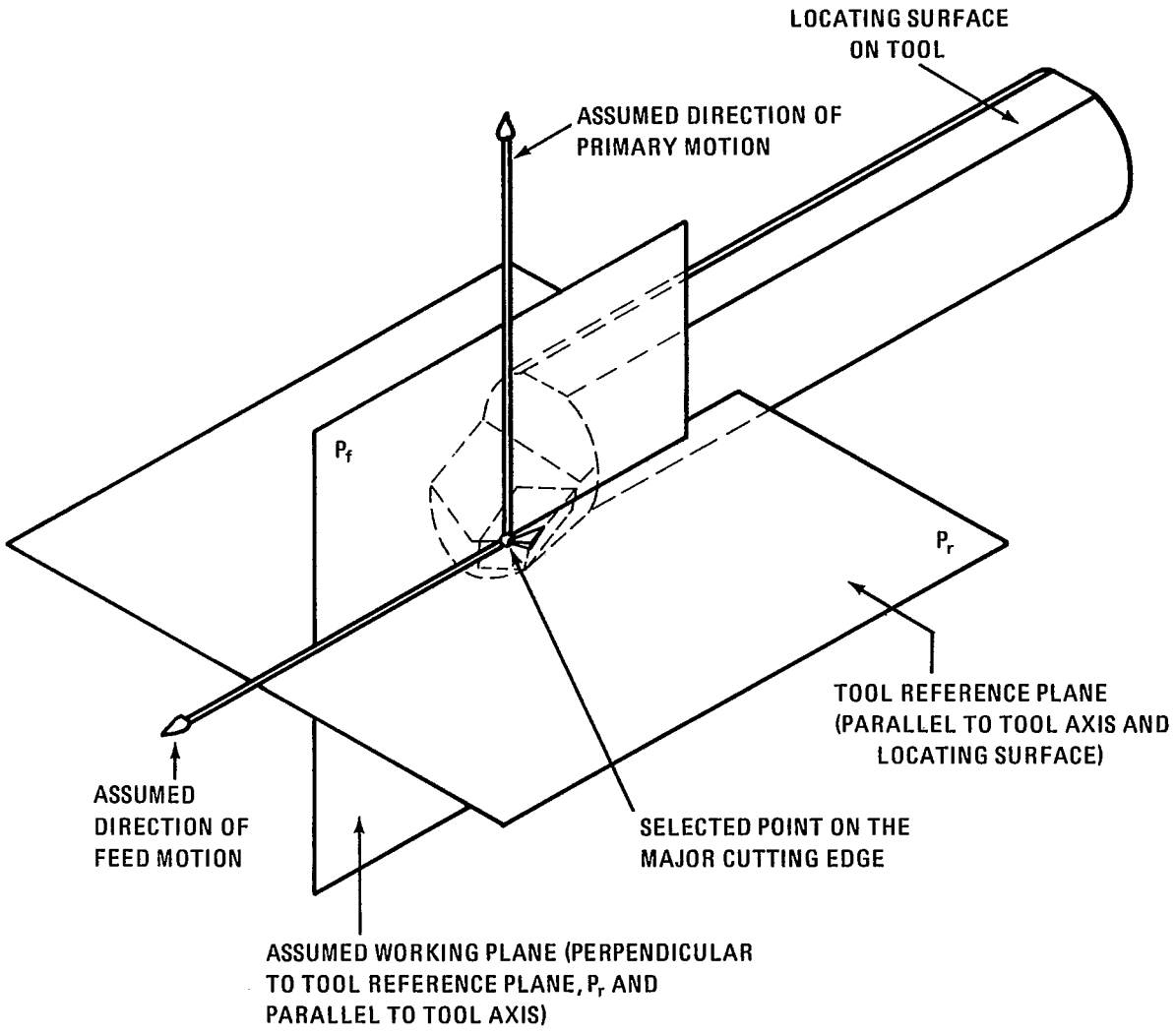

FIG. 12 TOOL-IN-HAND PLANES P_r AND P_f FOR THE MAJOR CUTTING EDGE OF A BORING TOOL

Copyright ASME International
Provided by IHS under license with ASME
No reproduction or networking permitted without license from IHS

Not for Resale

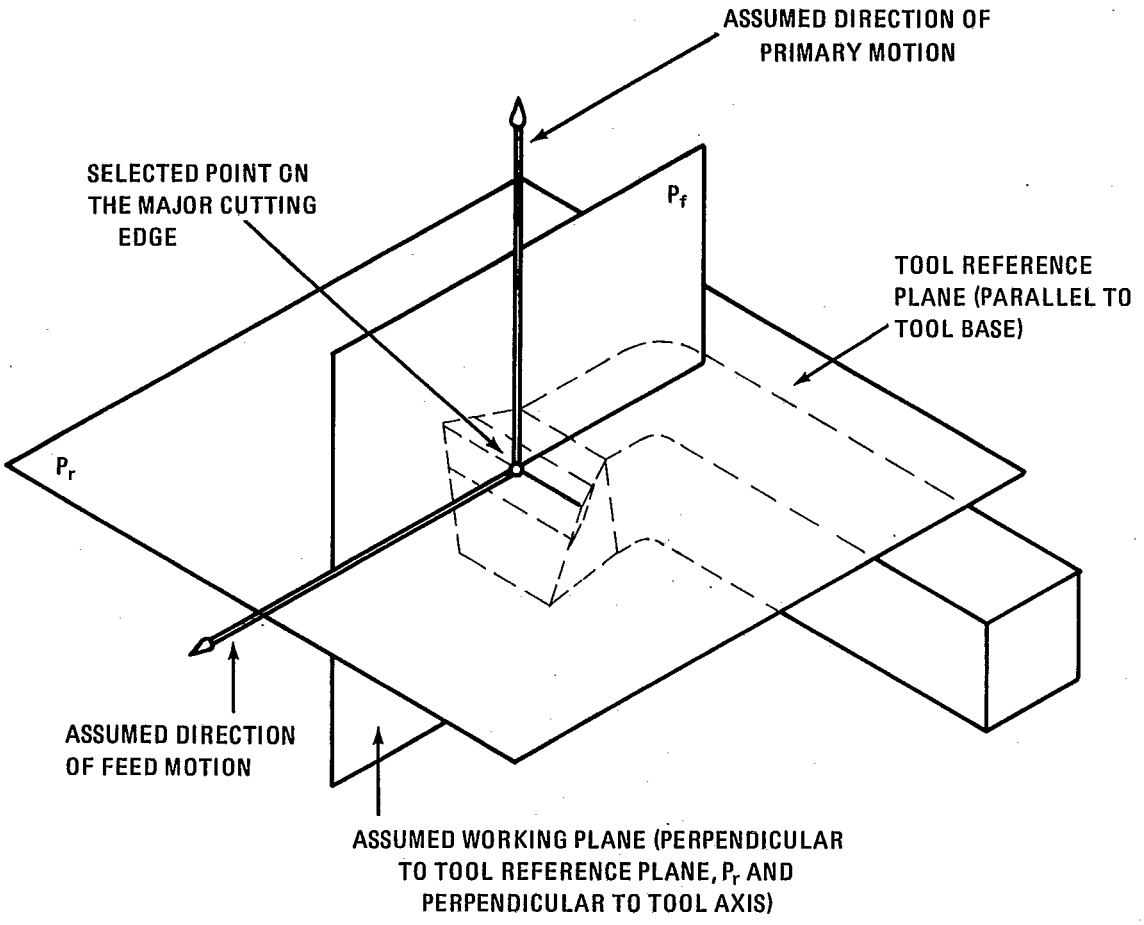

FIG. 13 TOOL-IN-HAND PLANES P_r AND P_f FOR THE MAJOR CUTTING EDGE OF A BENT-SHANK PLANER UNDERCUTTING TOOL

Copyright ASME International
Provided by IHS under license with ASME
No reproduction or networking permitted without license from IHS

Not for Resale

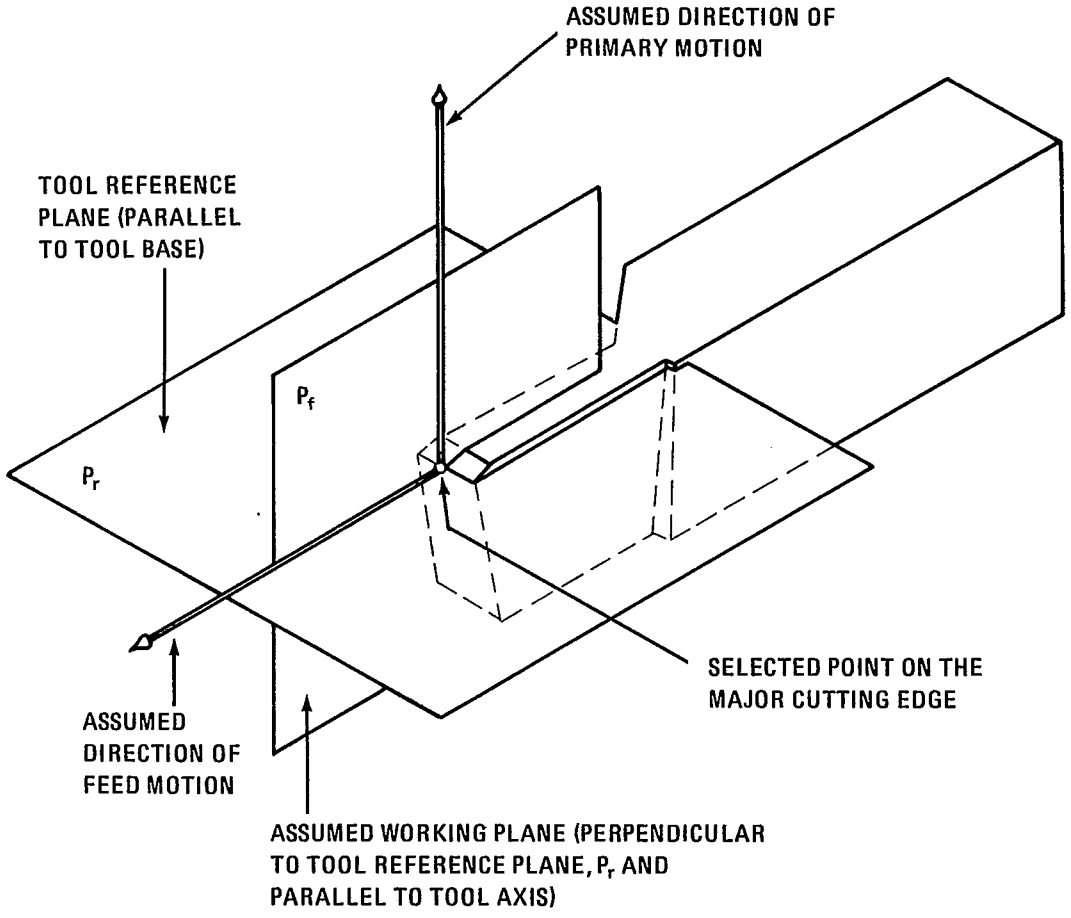

FIG. 14 TOOL-IN-HAND PLANES P_r AND P_f FOR THE MAJOR CUTTING EDGE OF A CUT-OFF TOOL

Copyright ASME International
Provided by IHS under license with ASME
No reproduction or networking permitted without license from IHS

Not for Resale

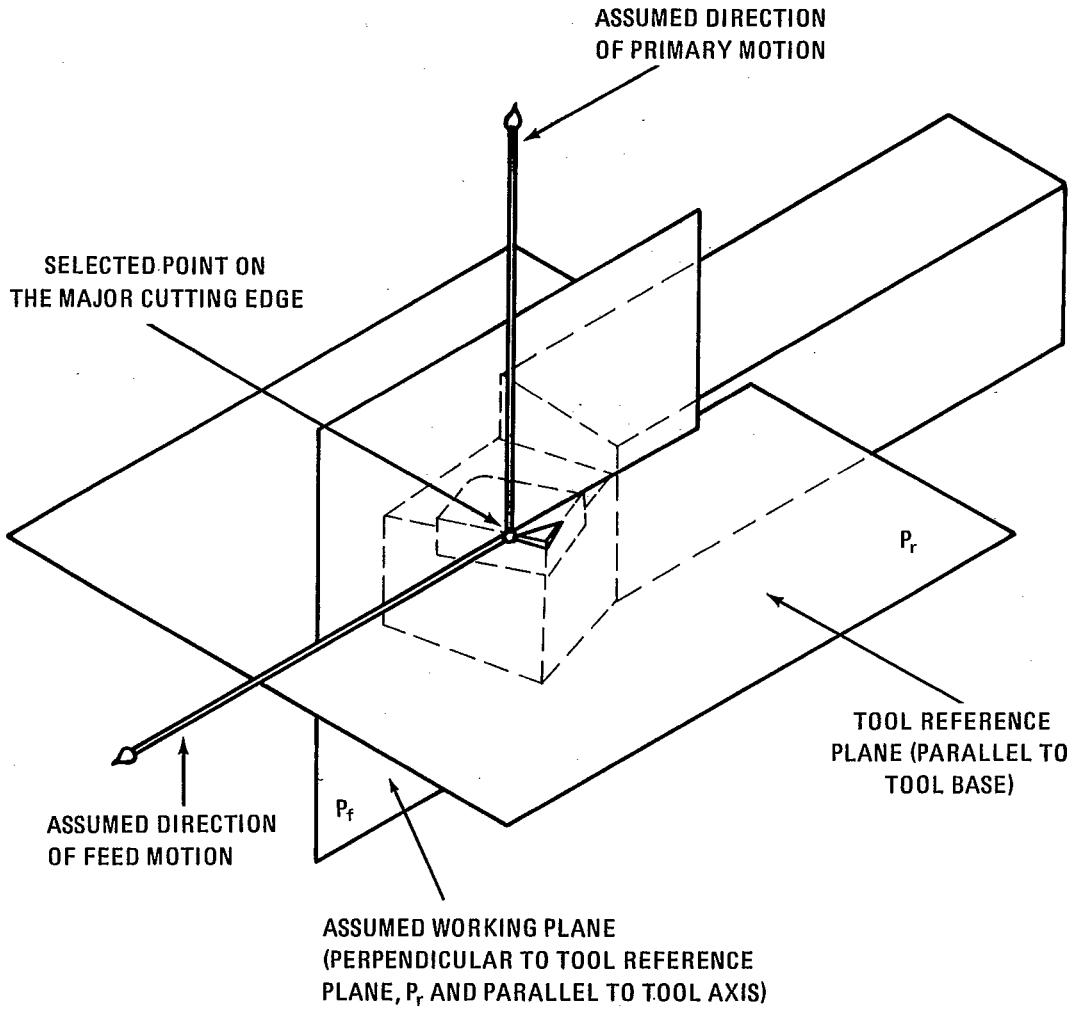

FIG. 15 TOOL-IN-HAND PLANES P_r AND P_f FOR THE MAJOR CUTTING EDGE OF A BENT SHANK FACING TOOL

Copyright ASME International
Provided by IHS under license with ASME
No reproduction or networking permitted without license from IHS

Not for Resale

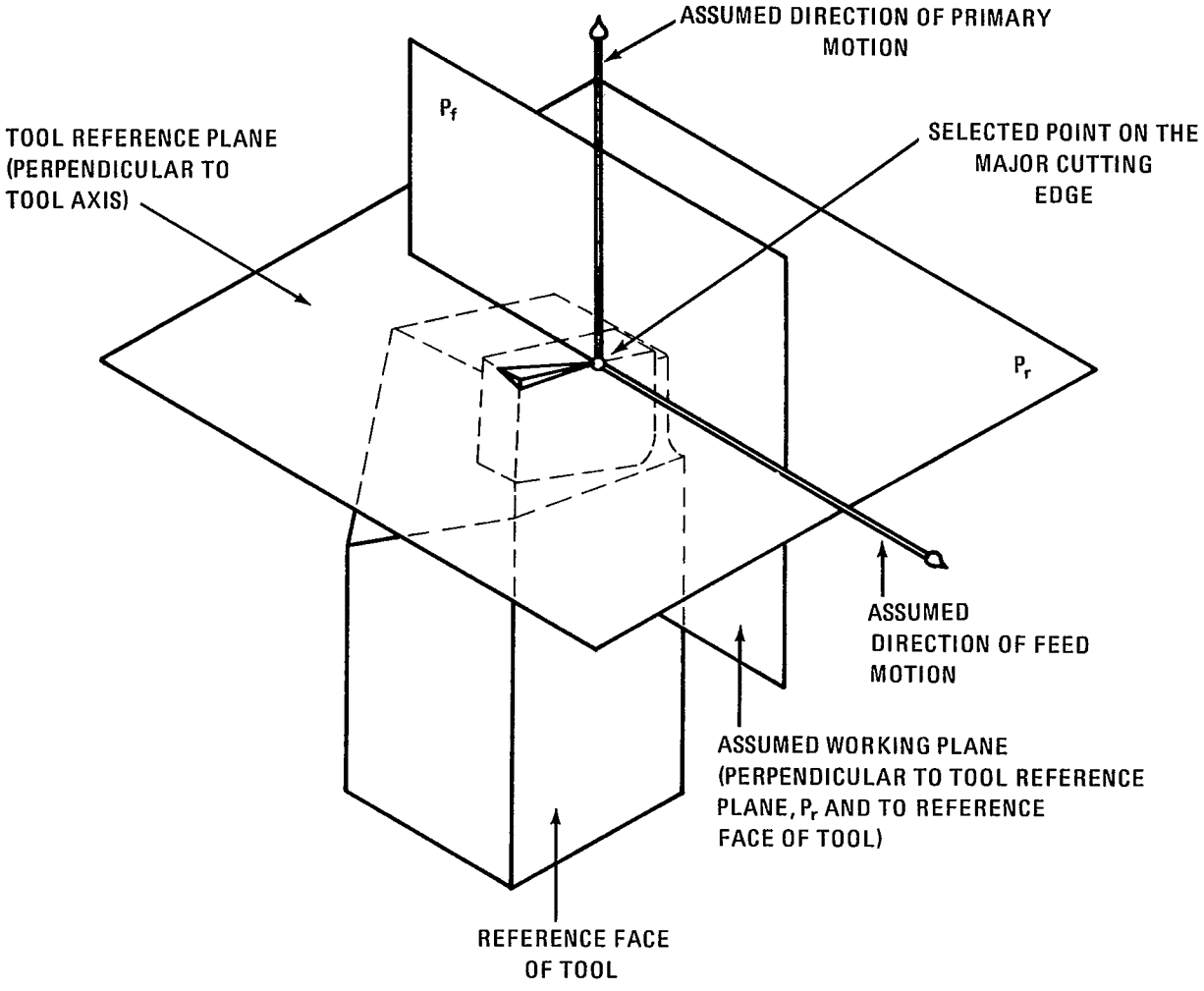

FIG. 16 TOOL-IN-HAND PLANES P_r AND P_f FOR THE MAJOR CUTTING EDGE OF A ROLLER TURNING TOOL

Copyright ASME International
Provided by IHS under license with ASME
No reproduction or networking permitted without license from IHS

Not for Resale

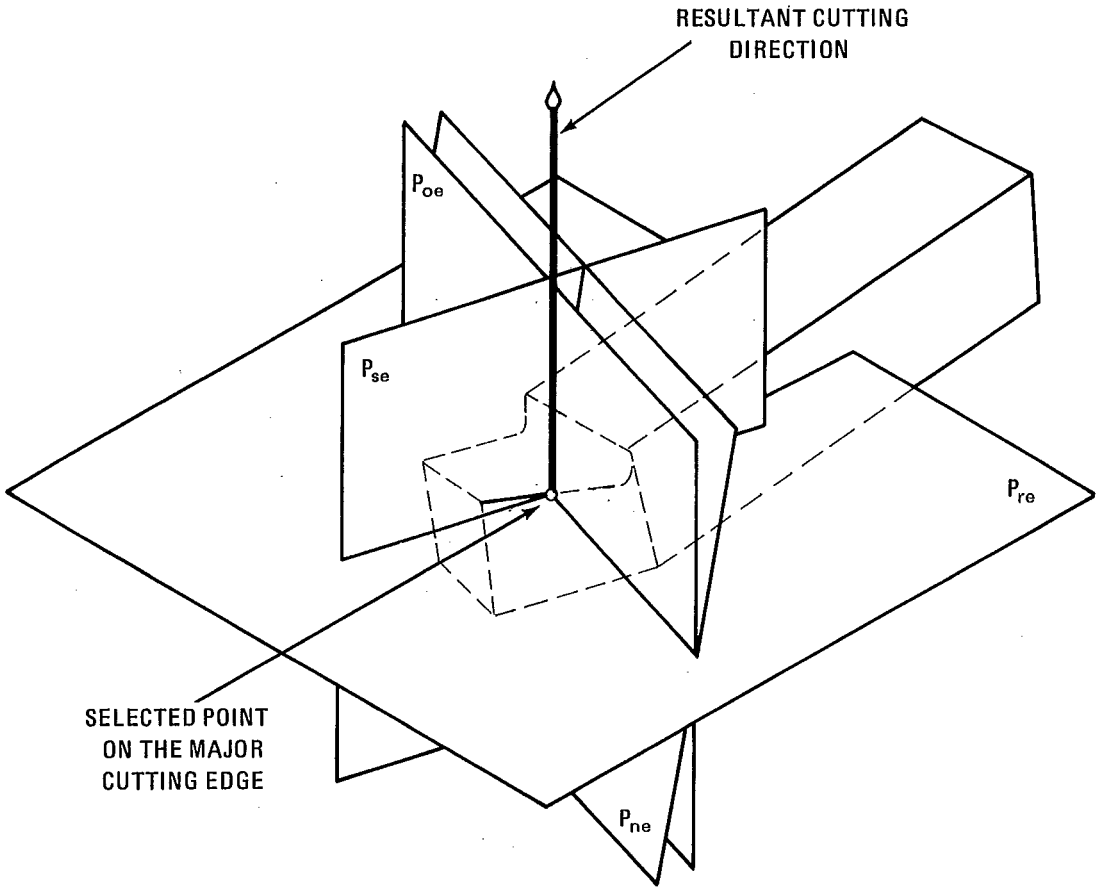

FIG. 17 TOOL-IN-USE PLANES P_{re}, P_{se}, P_{oe} AND P_{ne}
FOR THE MAJOR CUTTING EDGE

Copyright ASME International
Provided by IHS under license with ASME
No reproduction or networking permitted without license from IHS

Not for Resale

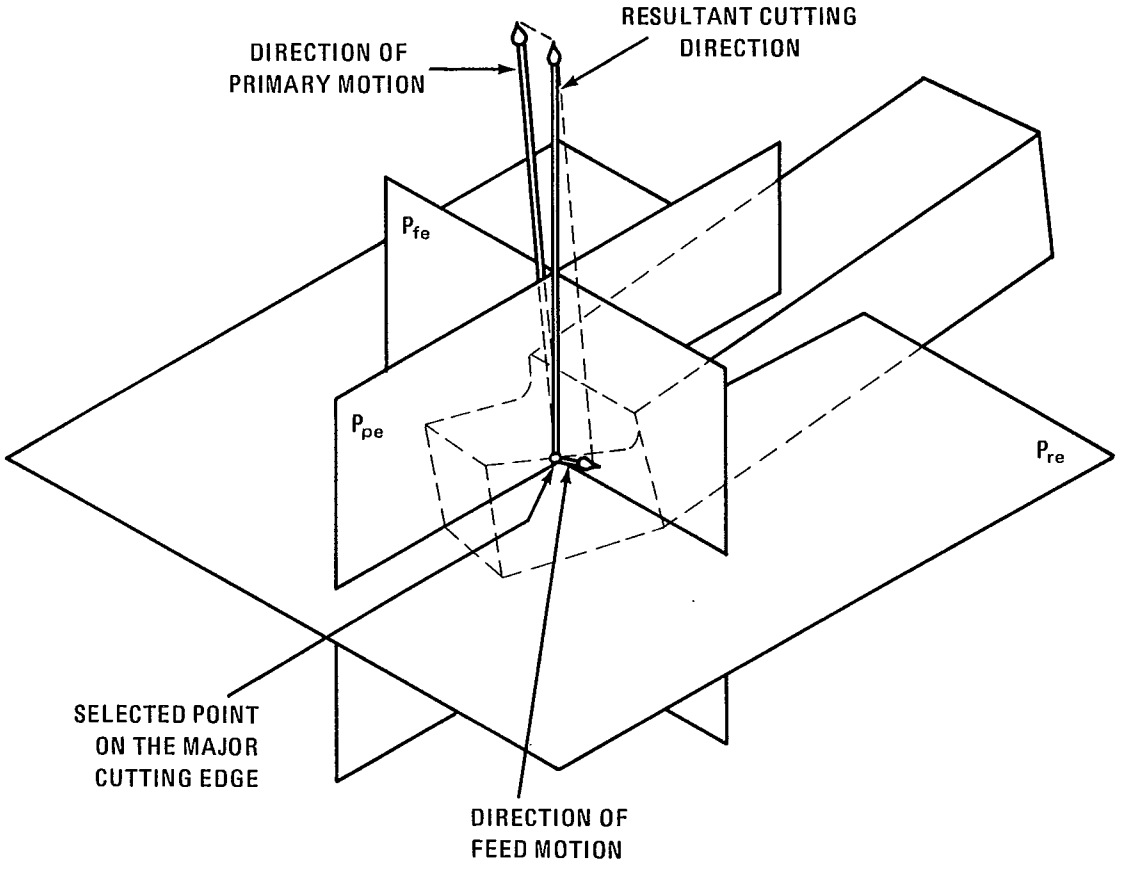

FIG. 18 TOOL-IN-USE PLANES P_{re}, P_{fe} AND P_{pe} FOR THE MAJOR CUTTING EDGE

Copyright ASME International
Provided by IHS under license with ASME
No reproduction or networking permitted without license from IHS

Not for Resale

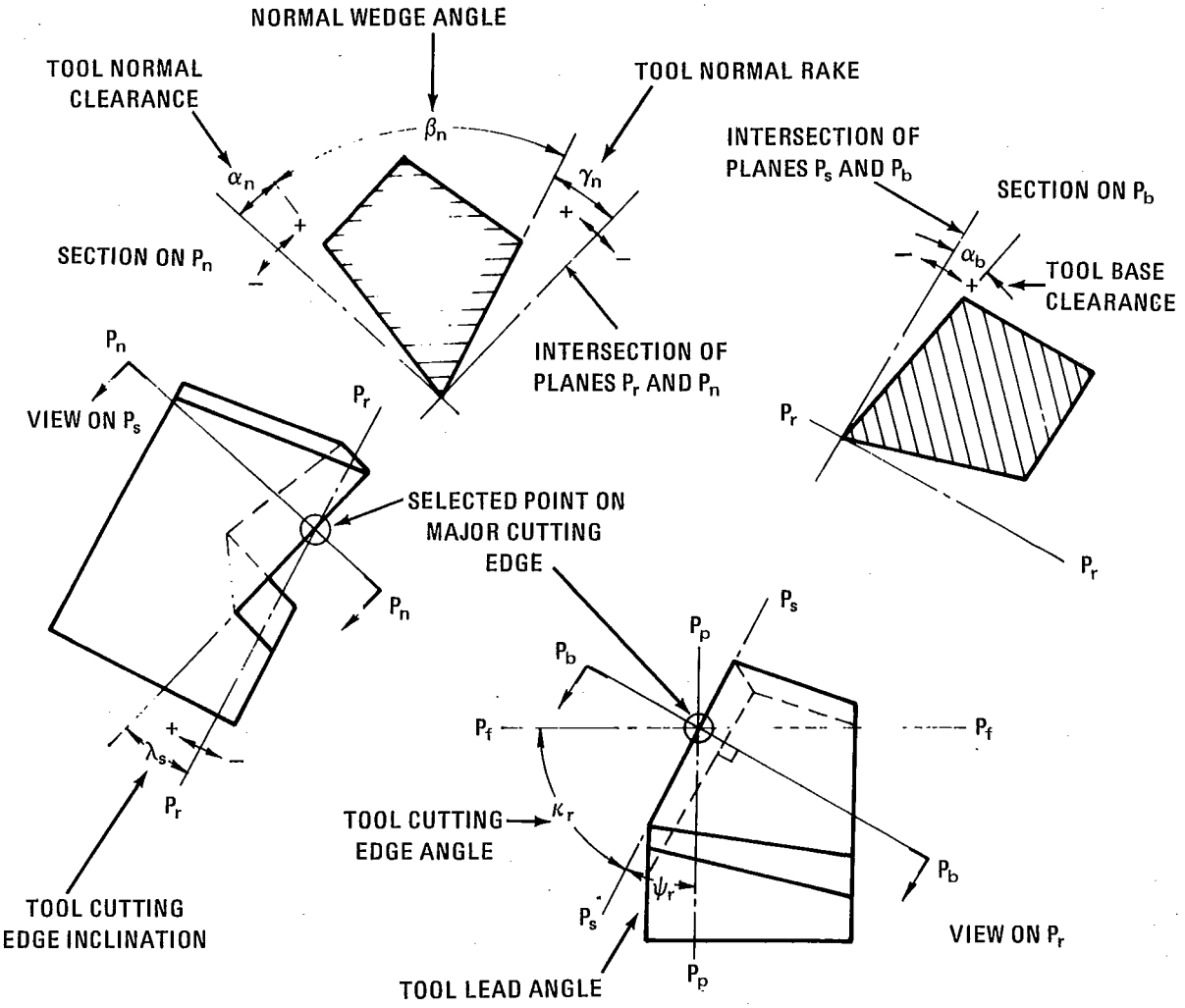

FIG. 19 TOOL ANGLES

Copyright ASME International
Provided by IHS under license with ASME
No reproduction or networking permitted without license from IHS

Not for Resale

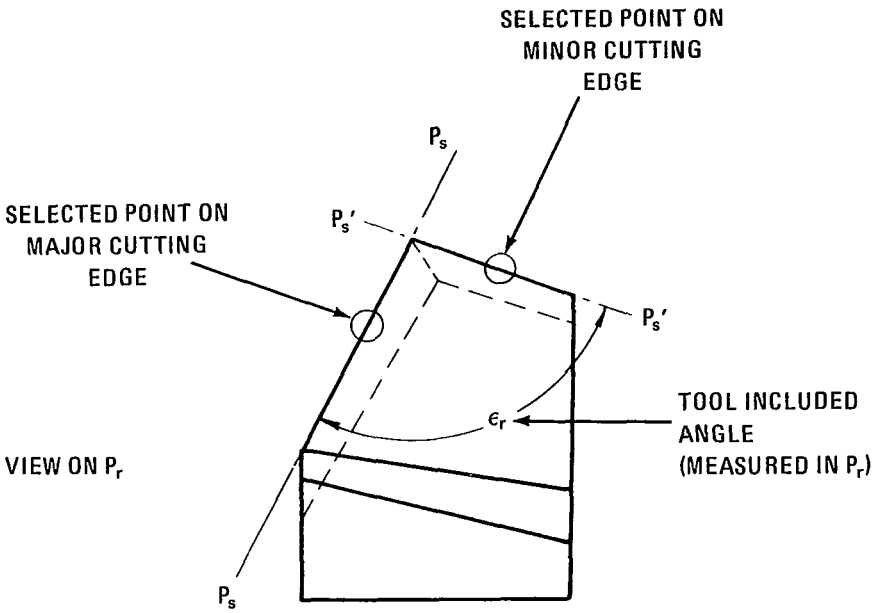

FIG. 20 TOOL INCLUDED ANGLE

Copyright ASME International
Provided by IHS under license with ASME
No reproduction or networking permitted without license from IHS
Not for Resale

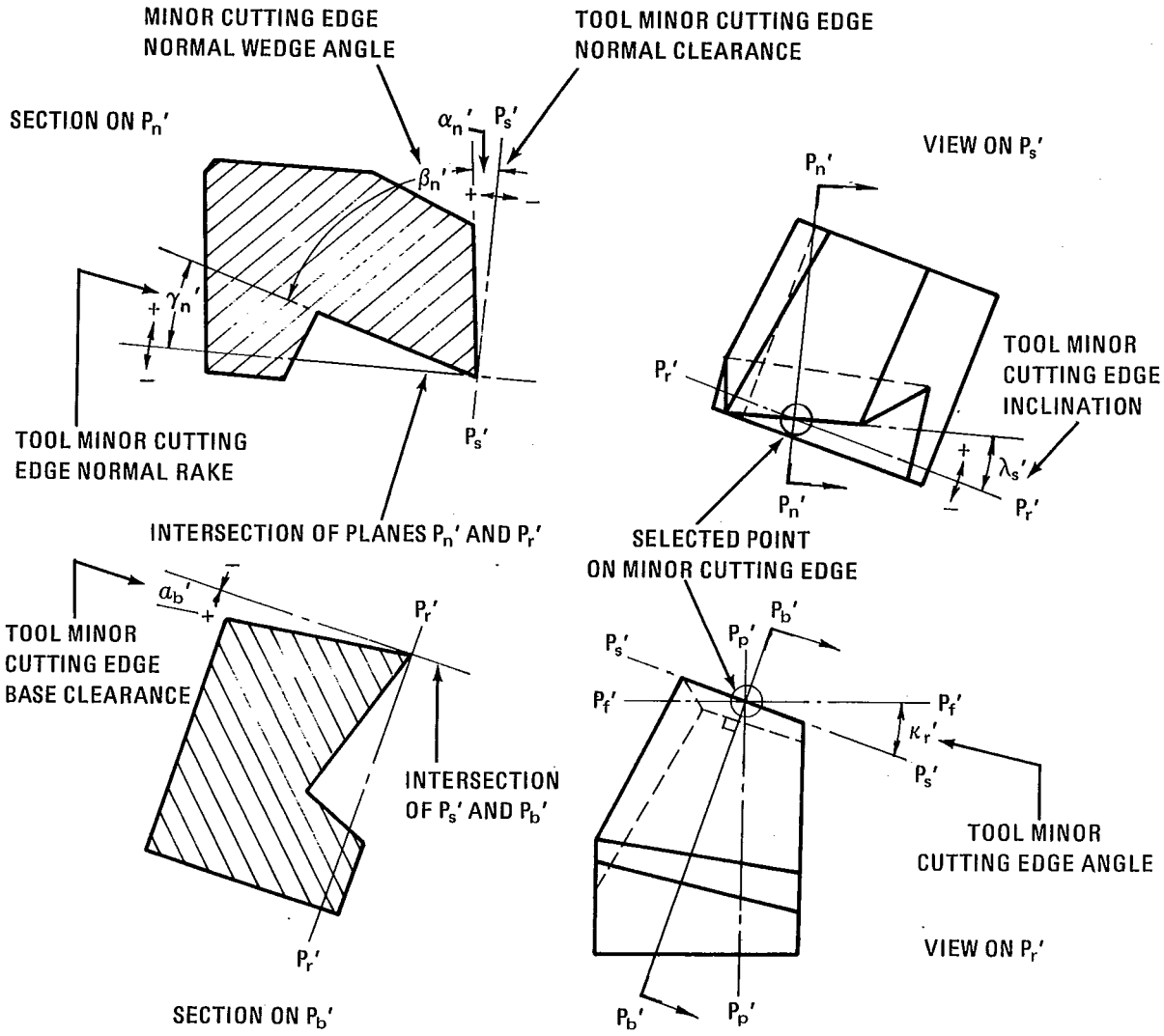

FIG. 21 TOOL ANGLES—SPECIAL CASE MINOR CUTTING EDGE ANGLES

Copyright ASME International
Provided by IHS under license with ASME
No reproduction or networking permitted without license from IHS

Not for Resale

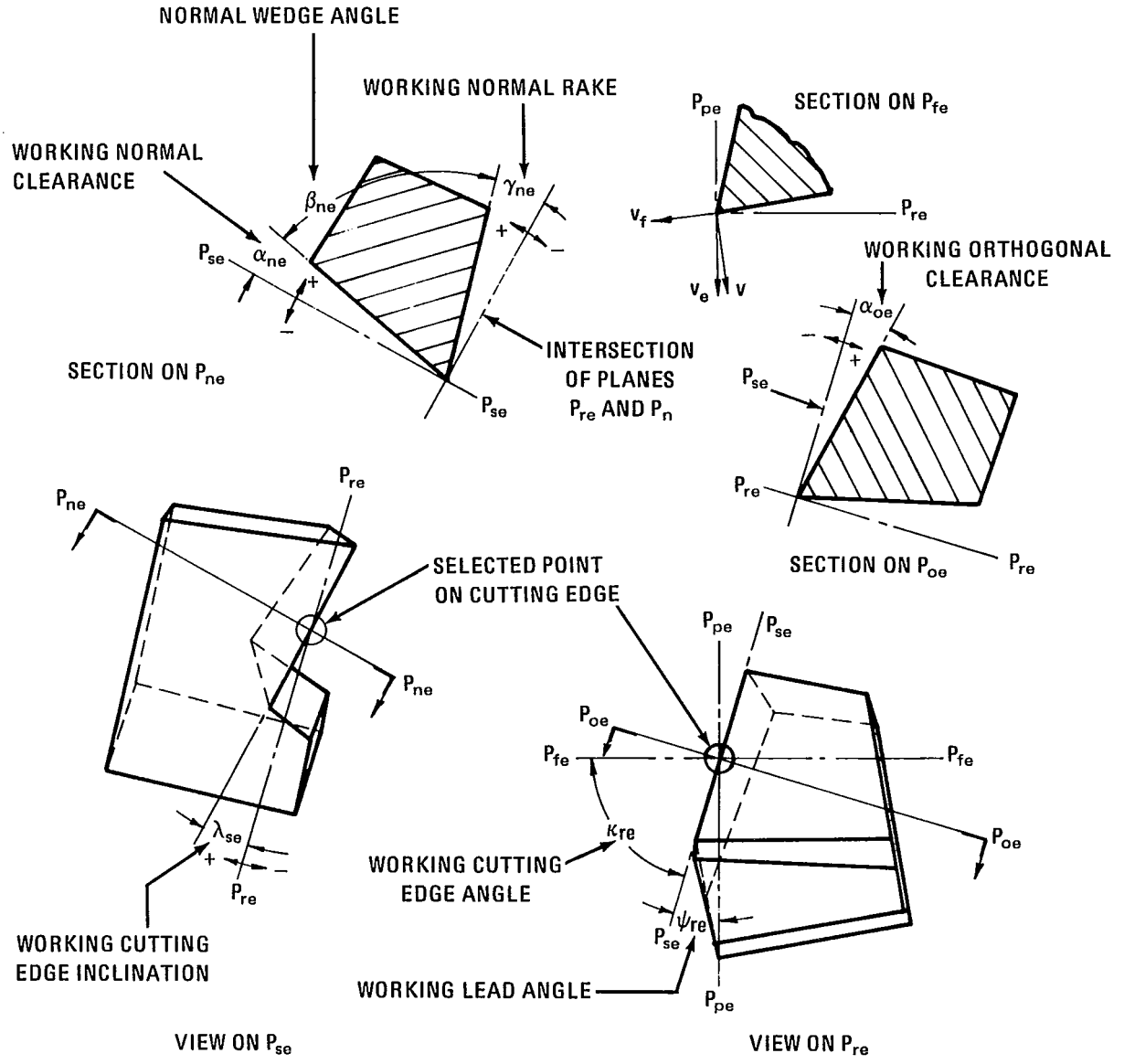

FIG. 22 WORKING ANGLES

Copyright ASME International
Provided by IHS under license with ASME
No reproduction or networking permitted without license from IHS

Not for Resale

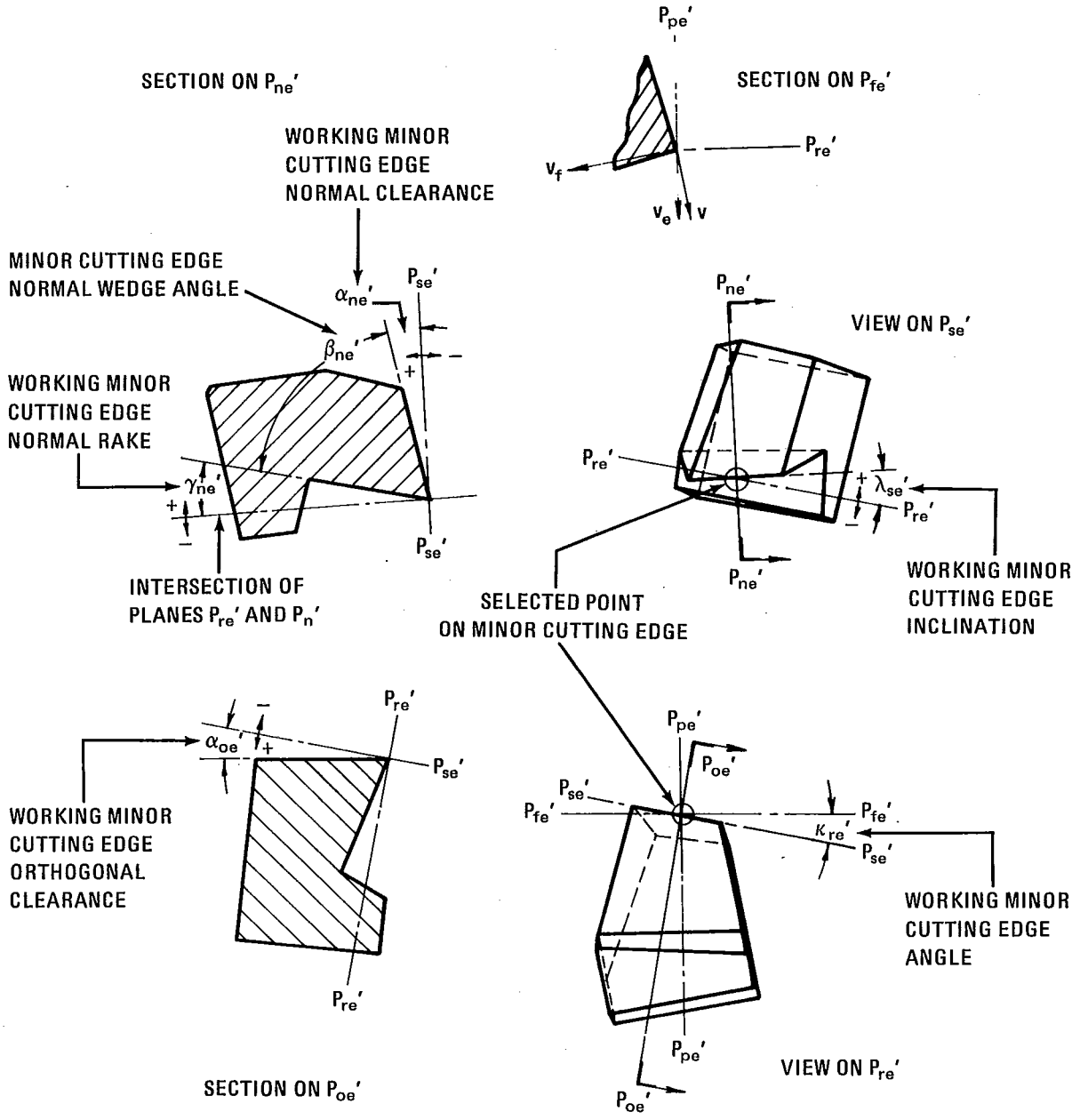

FIG. 23 WORKING ANGLES—SPECIAL CASE MINOR CUTTING EDGE ANGLES

Copyright ASME International
Provided by IHS under license with ASME
No reproduction or networking permitted without license from IHS

Not for Resale

APPENDIX A

A1. SUMMARY OF ANGLES

A1.1 Tool and Workpiece Motions

DEFINITION NO.	ANGLE	DEFINITION		
		Angle between	and	measured in plane
4.6.10	Feed motion angle ϕ	direction of feed motion	direction of primary motion	P_{fe}
4.6.11	Resultant cutting speed angle η	Direction of primary motion	resultant cutting direction	P_{fe}

A1.2 Tool and Working Angles

DEFINITION NO.	ANGLE		DEFINITION		
	Tool Angle	Working Angle	Angle between	and	measured in plane
6.2.1	Tool normal rake γ_n		A_γ	P_r	P_n
6.3.1		Working normal rake γ_{ne}	A_γ	P_{re}	P_{ne} ($\equiv P_n$)
6.2.2	Tool normal clearance α_n		A_α	P_s	P_n
6.3.2		Working normal clearance α_{ne}	A_α	P_{se}	P_{ne} ($\equiv P_n$)
6.2.3	Tool base clearance α_a		A_α	P_s	P_b
6.3.3		Working orthogonal clearance α_{oe}	A_α	P_{se}	P_{oe}

Copyright ASME International
Provided by IHS under license with ASME
No reproduction or networking permitted without license from IHS
Not for Resale

A1.2 Tool and Working Angles (Continued)

DEFINITION NO.	ANGLE		DEFINITION		
	Tool Angle	Working Angle	Angle between	and	measured in plane
6.2.4	Tool lead angle ψ_r (Tool approach angle) (Applies only to major cutting edge)		P_s	P_p	P_r
6.3.4		Working lead angle ψ_{re} (Working approach angle) (Applies only to major cutting edge)	P_{se}	P_{pe}	P_{re}
6.2.5	Tool cutting edge angle κ_r		P_s	P_f	P_r
6.3.5		Working cutting edge angle κ_{re}	P_{se}	P_{fe}	P_{re}
6.2.6	Tool cutting edge inclination λ_s		S	P_r	P_s
6.3.6		Working cutting edge inclination λ_{se}	S_e	P_{re}	P_{se}
6.2.7	Tool included angle ϵ_r		P_s	P_s'	P_r
6.2.8 6.3.7	Normal wedge angle β_n ($\equiv\beta_{ne}$)	Normal wedge angle β_{ne} ($\equiv\beta_n$)	A_γ	A_α	P_n ($\equiv P_{ne}$)

Copyright ASME International
Provided by IHS under license with ASME
No reproduction or networking permitted without license from IHS
Not for Resale

A2. LIST OF SYMBOLS

SYMBOL		DEFINITION NO.
	TOOL SURFACES	
A_γ	Face	4.3.1
A_α	Flank	4.3.3
	CUTTING EDGES	
S	Tool major cutting edge	4.4.1
S′	Tool minor cutting edge	4.4.1
S_e	Working major cutting edge	4.4.1
S_e'	Working minor cutting edge	4.4.1
	DIMENSIONS	
f	Feed	4.5.1
a_p	Back engagement	4.5.2
r_ϵ	Corner radius	4.5.3
b_ϵ	Chamfered corner length	4.5.4
b_γ	Width of land on major face	4.5.5
b_γ'	Width of land on minor face	4.5.5
b_α	Width of land on major flank	4.5.5
b_α'	Width of land on minor flank	4.5.5
	Note: The number of the land together with the suffix used to identify the plane of measurement may be added. See Table 1.	
r_n	Rounded cutting edge radius	4.5.6
	TOOL AND WORKPIECE MOTIONS	
v	Cutting speed	4.6.7
v_f	Feed speed	4.6.8
v_e	Resultant cutting speed	4.6.9
ϕ	Feed motion angle	4.6.10
η	Resultant cutting speed angle	4.6.11
	TOOL-IN-HAND REFERENCE SYSTEM OF PLANES	
P_r	Tool reference plane	5.2.1
P_f	Assumed working plane	5.2.2
P_p	Tool back plane	5.2.3
P_s	Tool cutting edge plane	5.2.4

Copyright ASME International
Provided by IHS under license with ASME
No reproduction or networking permitted without license from IHS
Not for Resale

A2. LIST OF SYMBOLS (Continued)

SYMBOL	TOOL-IN-HAND REFERENCE SYSTEM OF PLANES (Cont.)	DEFINITION NO.
P_b	Tool flank orthogonal plane	5.2.5
P_n	Cutting edge normal plane	5.2.6
	TOOL-IN-USE REFERENCE SYSTEM OF PLANES	
P_{re}	Working reference plane	5.3.1
P_{fe}	Working plane	5.3.2
P_{pe}	Working back plane	5.3.3
P_{se}	Working cutting edge plane	5.3.4
P_{oe}	Working orthogonal plane	5.3.5
$P_{ne} \equiv P_n$	Cutting edge normal plane	5.3.6
	TOOL ANGLES	
γ_n	Tool normal rake	6.2.1
α_n	Tool normal clearance	6.2.2
α_b	Tool base clearance	6.2.3
ψ_r	Tool lead angle	6.2.4
κ_r	Tool cutting edge angle	6.2.5
λ_s	Tool cutting edge inclination	6.2.6
ϵ_r	Tool included angle	6.2.7
β_n	Normal wedge angle	6.2.8
	WORKING ANGLES	
γ_{ne}	Working normal rake	6.3.1
α_{ne}	Working normal clearance	6.3.2
α_{oe}	Working orthogonal clearance	6.3.3
ψ_{re}	Working lead angle	6.3.4
κ_{re}	Working cutting edge angle	6.3.5
λ_{se}	Working cutting edge inclination	6.3.6
$\beta_{ne} \equiv \beta_n$	Normal wedge angle	6.3.7

Copyright ASME International
Provided by IHS under license with ASME
No reproduction or networking permitted without license from IHS
Not for Resale

AMERICAN NATIONAL STANDARDS FOR CUTTING TOOLS

Blanks and Semi-Finished Blanks for Solid Carbide Taps	B94.1–1969 (R1975)
Reamers	B94.2–1971
Straight Cut-Off Blades for Lathes and Screw Machines	B94.3–1965 (R1972)
Identification System for Throw Away Inserts for Cutting Tools	B94.4–1965 (R1972)
Carbide Blanks and Cutting Tools	B94.5–1974
Knurling	B94.6–1966 (R1972)
Hobs	B94.7–1966 (R1972)
Inserted Blade Milling Cutter Bodies	B94.8–1967 (R1972)
Taps-Cut and Ground Threads	B94.9–1971
High-Speed Steel and Cast Nonferrous Single-Point Tools and Tool Holders	B94.10–1967 (R1972)
Twist Drills	B94.11–1967 (R1972)
Carbide-Tipped Masonry Drills, and Blanks for Carbide-Tipped Masonry Drills	B94.12–1968
Blanks for Carbide Burs	B94.13–1968
Punches-Basic Head Type	B94.14–1968 (R1975)
Retainers–Basic Ball-Lock Punch and Die Button, Light and Heavy Duty	B94.16–1968 (R1975)
Gages–Functional, Ball-Lock Punch and Die Button, Light and Heavy Duty	B94.17–1968 (R1975)
Punches–Basic Ball-Lock Light and Heavy Duty	B94.18–1968 (R1975)
Milling, Cutters and End Mills	B94.19–1968
Specifications for Carbide Blanks for Twist Drills, Reamers, End Mills, and Random Rod	B94.20–1968
Gear Shaper Cutters	B94.21–1968 (R1974)
Punches-Variable, Head Type	B94.22–1968 (R1975)
Punch Guide Bushings-Variable, Press Fit	B94.23–1969 (R1975)
Heavy Duty Carbide Inserts for Cutting Tools	B94.24–1969
Indexable Inserts for Cutting Tools	B94.25–1975
Indexable (Throw-Away) Insert Holders	B94.26–1969
Die Buttons–Basic, Taper Relief, Press Fit	B94.27–1970
Die Buttons–Basic, Straight Relief, Press Fit	B94.28–1970
Die Buttons–Basic, Ball-Lock	B94.29–1970
Die Buttons–Variable, Press Fit	B94.30–1970
Steel Rotary Slitting Knives and Steel Spacing Collars	B94.31–1969
Circular and Dovetailed Forming Tools Blanks	B94.32–1954 (R1971)
Jig Bushings	B94.33–1974
Life Tests of Single Point Tools	B94.34–1946 (R1971)
Drill Drivers	B94.35–1972
Life Tests for Single-Point Tools of Sintered Carbide	B94.36–1956 (R1971)
Carbide Blanks and Cutting Tools, Single-Point Carbide-Tipped, Roller Turner Type	B94.37–1972
Punches-Variable, Angle Head Type and Related Quill Bushings	B94.38–1972
Punches Basic, Combination Angle Head Type and Related Quill Bushings	B94.39–1972
Punches-Wire Type	B94.40–1972
Punches-Basic Angle Head Type and Related Quill Bushings	B94.41–1972
Carbide Blanks for Tipping Circular Saws	B94.42–1972
Die Buttons–Variable, Press Fit, Headless and Head Type, Step Relief	B94.43–1972
Punches-Basic, Cylindrical Head Type and Related Quill Bushings	B94.44–1972
Precision Indexable Insert Holders	B94.45–1973
Insert Radius Compensation Charts for Precision Indexable Insert Holders	B94.45a–1975
Carbide Seats Used with Indexable Inserts for Clamp Type Holders	B94.46–1973
Carbide Chip Breakers Used with Indexable Inserts for Clamp Type Holders	B94.47–1973
Spade Drill Blades and Spade Drill Holders	B94.49–1975
Basic Nomenclature and Definitions for Single-Point Cutting Tools	B94.50–1975

Binders for holding standards are available
A complete list of Standards published by The American Society of Mechanical Engineers obtainable upon request.

M00084

Copyright ASME International
Provided by IHS under license with ASME
No reproduction or networking permitted without license from IHS
Not for Resale