ASME B94.37M 79 ■ 0759670 0048390 0 ■

M-25-20
M-27-03

AMERICAN NATIONAL STANDARD

Roller Turner Type Cutting Tools, Single Point

ANSI B94.37M-1979

(REVISION OF B94.37-1972)

SECRETARIAT

THE AMERICAN SOCIETY OF MECHANICAL ENGINEERS

PUBLISHED BY

THE AMERICAN SOCIETY OF MECHANICAL ENGINEERS

United Engineering Center 345 East 47th Street New York, N.Y. 10017

COPYRIGHT American Society of Mechanical Engineers
Licensed by Information Handling Services

Date of Issuance: April 30, 1980

No part of this document may be reproduced in any form, in an electronic retrieval system or otherwise, without the prior written permission of the publisher.

Copyright ©1980
THE AMERICAN SOCIETY OF MECHANICAL ENGINEERS
All Rights Reserved
Printed in U.S.A.

COPYRIGHT American Society of Mechanical Engineers
Licensed by Information Handling Services

FOREWORD

In order to satisfy the apparent need for standardization of roller turner tools, the Standards Committee of the Cemented Carbide Producers Association undertook to develop the necessary material. The committee's first task was to assemble factual data, which was then correlated in terms of popularity of each style and size, and from this material a recommendation was prepared. The recommendation was then submitted to the manufacturers of roller turner machines and tools for review and comment. All suggestions were incorporated into a final draft and that draft submitted to the American Standards Association on February 1, 1958, for approval as an American Standard under the Existing Standards Method. This was published as ASA B81.1-1961.

The document was revised by American National Standards Committee B94 and approved and redesignated by the American National Standards Institute as ANSI B94.37-1972 on April 14, 1972.

The current standard, renamed "Roller Turner Type Cutting Tools, Single Point" was revised by TC-1 of Standards Committee B94 and was submitted to the ASME on January 31, 1979. It was approved as an American National Standard on October 30, 1979.

COPYRIGHT American Society of Mechanical Engineers
Licensed by Information Handling Services

AMERICAN NATIONAL STANDARDS COMMITTEE B94

CUTTING TOOLS, HOLDERS, DRIVERS AND BUSHINGS

OFFICERS

Harry McLinden, *Chairman*
A. M. Mezey, *Vice-Chairman*

AMERICAN GEAR MANUFACTURERS, ASSOCIATIONS THE
P. M. Dean, Jr., Mechanical Technology, Inc. Latham, New York
Robert C. Brown, Alternate, American Gear Manufacturers Associations, Arlington, Virginia

AMERICAN SOCIETY OF MECHANICAL ENGINEERS, THE
M. E. Merchant, Dr., Cincinnati Milacron, Inc., Cincinnati, Ohio
G. M. Monacelli, General Electric Co., Detroit, Michigan
C. J. Oxford, Jr., National Twist Drill & Tool Co., Rochester, Michigan

CEMENTED CARBIDE PRODUCERS ASSOCIATION
J. A. Woodward, Teledyne Firth Sterling Pittsburgh, Pennsylvania
A. P. Wherry, Alternate, Cemented Carbide Products Asso. Cleveland, Ohio

CUTTING TOOL MANUFACTURERS ASSOCIATION
E. J. Czopor, Falcon Tool Company Warren, Michigan
C. W. Jatho, Alternate, Cutting Tool Manufacturers Association, Birmingham, Michigan

GENERAL SERVICES ADMINISTRATION
W. R. Wacker, Federal Supply Service (FMET), Washington, D.C.

HACK & BAND SAW MANUFACTURERS ASSOCIATION OF AMERICA
William B. Korb, The Henry G. Thompson Company, Branford, Connecticut
C. M. Stockinger, Alternate, Hack & Band Saw Manufacturers Association of America, Cleveland, Ohio

METAL CUTTING TOOL INSTITUTE
W. A. Wagner, Cleveland Twist Drill Company, Cleveland, Ohio
F. A. Petersen, Metal Cutting Tool Institute, Cleveland, Ohio

NATIONAL ASSOCIATION OF PUNCH MANUFACTURERS
Richard Thomas, Dayton Progress Corp., Dayton, Ohio

NATIONAL MACHINE TOOL BUILDERS' ASSOCIATION
G. F. Wilson, General Electric Company, Worthington, Ohio
John B. Deam, Alternate, National Machine Tool Builders' Association, McLean, Virginia

SOCIETY OF CARBIDE ENGINEERS
C. H. Lang, Society of Carbide Engineers, Bridgeville, Pennsylvania

SOCIETY OF MANUFACTURING ENGINEERS
K. A. Lundell, The Producto Machine Company, Jamestown, New York
Harry McLinden, Caterpillar Tractor Company, Peoria, Illinois
W. N. Moore, The Ford Motor Company, Dearborn, Michigan

TELEPHONE GROUP
R. A. Agnew, Western Electric Co., Inc. Chicago, Illinois
S. P. Rogacki, Alternate, Western Electric Company Inc., Kearny, New Jersey

U.S. DEPARTMENT OF THE ARMY
D. L. York, Liaison, U.S. Army Armament, Rock Island, Illinois

U.S. DEPARTMENT OF THE NAVY (NSSC)
J. R. Ruff, Naval Ship Systems Command (SEA 605)., Washington, D.C.

COPYRIGHT American Society of Mechanical Engineers
Licensed by Information Handling Services

U.S. MACHINE SCREW BUREAU
Herman Muenchinger, Continental Screw Company, New Bedford, Massachusetts
Steven Rooney, Alternate, Hi-Pro Tool Company, New Bedford, Massachusetts

INDIVIDUAL COMPANIES
Harold Cooper, AES Certification Institute, Troy, Michigan
Kenneth Hull, The Ingersoll Milling Machine Company, Rockford, Illinois
A. M. Mezey, Richard Bros. Punch Company, Detroit, Michigan
Lyle Storrer, Mohawk Tools, Inc., Montpelier, Ohio
Anderson Ashburn, McGraw-Hill, New York, New York

MOTOR VEHICLE MANUFACTURERS ASSOCIATION
A. R. Neinast, Corporate Standards, International Harvester, Hinsdale, Illinois
B. Ross Ashby, Alternate, Motor Vehicle Manufacturers Association of the United States, Inc., Detroit, Michigan

TECHNICAL COMMITTEE 1
CARBIDE AND OXIDE TOOLS

C. C. Tobin, Chairman, Caterpillar Tractor Co., East Peoria, Illinois
A. P. Wherry, Secretary, Cemented Carbide Producers Association, Cleveland, Ohio
Leo Muller, Adamas Carbide Corporation, Kenilworth, New Jersey
N. W. Selbo, General Motors Corporation, Factory 31, Flint, Michigan
Jim McCain, John Deere Waterloo Tractor Works, Waterloo, Iowa
T. W. Gowanlock, General Electric Co., Detroit, Michigan
M. B. Diehl, The Ingersoll Milling Machine Co., Rockford, Illinois
Richard Pugh, Jones and Lamson, Springfield, Vermont
Henry W. Stier, Kelsey-Hayes Company, Romulus, Michigan
Donald W. Warren, Kennametal, Inc., Latrobe, Pennsylvania
H. J. Woodbridge, Douglas Aircraft Company, Long Beach, California
Fred Shallenberger, Metal Cutting Tools, Inc., Rockford, Illinois
J. D. Knox, Multi Metals Division, Louisville, Kentucky
D. Sandora, Newcomer Products, Inc., Latrobe, Pennsylvania
Howard Stoneley, Sandvik, Inc., Fair Lawn, New Jersey
J. A. Woodward, Teledyne Firth Sterling, Pittsburgh, Pennsylvania
J. J. Ley, TRW Wendt-Sonis Division, Rogers, Arkansas
E. J. Debarbieri, Tungsten Alloy Manufacturing Company Inc., Harrison, New Jersey
James Robinson, Valeron Corporation, The Tory, Michigan
Larry Flament, Fansteel VR/Wesson, Waukegan, Illinois
G. H. Whitfield, Walment Cemented Carbides, Royal Oak, Michigan
J. A. Edwards, XLO Tool & Abrasive Products, Des Plaines, Illinois
W. B. Stein, The Warner & Swasey Company, Akron, Ohio
Leo Murino, SECO Tools Inc., Northbrook, Illinois
T. P. Powers, Kyocera International, Inc., San Diego, California

CORRESPONDING MEMBERS

G. P. Miljus, Division of Wallace-Murray Corp., McKeesport, Pennsylvania
P. J. Waslis, Division of Aiken Industries, Inc., Irwin, Pennsylvania
P. J. Pappafava, General Carbide Corporation, Greensburg, Pennsylvania
R. S. Jacobs, Hydro Carbide Corporation, Latrobe, Pennsylvania
Dan Leech, Leech, Incorporated, Meadville, Pennsylvania
W. W. Phelps, Metal Carbides Corporation, Youngstown, Ohio
R. M. Byrne, Metal Cutting Tool Institute, New York
D. J. Derthick, Tungsten Carbide Manufacturing, Tustin, California
J. R. Ruff, Liaison, Standardization Societies, Washington, D.C.
J. C. Moyle, Vista Metals, Inc., Buena Vista, Pennsylvania
Harry McLinden, Caterpillar Tractor Company, Peoria, Illinois

COPYRIGHT American Society of Mechanical Engineers
Licensed by Information Handling Services

CONTENTS

Page

1. Scope 1

2. Identification System. 1

2.1 Holder Designations. 1

2.2 Shank Cross Section Designations. 1

FIGURES

Fig. 1 Roller Turner Tools, Style GS–15 x 15 Degree Compound Angle for Square Shoulder Turning. 2

Fig. 2 Roller Turner Tools, Style JL–5 Degree Angle for Square Shoulder Turning 3

Fig. 3 Roller Turner Tools, Style WSA–15 x 20 Degree Compound Angle for Square Shoulder Turning 4

Fig. 4 Roller Turner Tools, Style WSB–15 x 20 Degree Compound Angle for 5 Degree Lead Angle Turning 5

COPYRIGHT American Society of Mechanical Engineers
Licensed by Information Handling Services

AMERICAN NATIONAL STANDARD

ROLLER TURNER TYPE CUTTING TOOLS, SINGLE POINT

1. SCOPE

This Standard covers the dimensional envelope for various styles of single-point roller-turner tools covering brazed, solid, or indexable insert types.

The numbers shown are designated brazed tools, but the envelope covers all style tools – for designation of solid or indexable insert styles see individual tool manufacturers' catalogs.

The values stated in U.S. customary units are to be regarded as the standard.

2. IDENTIFICATION SYSTEM

Letters are used to identify single-point, cemented-carbide-tipped roller turner tools used with various types of holders, and numbers are used to designate the shank cross-section size of the tool.

2.1 Holder Designations

2.1.1 Style GS. The letters "GS" are used to designate a tool used in a 15 x 15 degree compound angle holder. See Fig. 1 for dimensions, style and designations.

2.1.2 Style JL. The letters "JL" are used to designate a tool used in a 5 degree angle holder. See Fig. 2 for dimensions, style, and designations.

2.1.3 Style WS. The letters "WS" are used to designate a tool used in a 15 x 20 degree compound angle holder. See Figs. 3 and 4 for dimensions, style, and designations. A third letter, either A or B, added to the WS designation indicates use of the tool.

2.1.3.1 Style WSA. The letter "A," added to the WS designation, indicates a tool used primarily for light cuts terminating at a square (90 degree) shoulder. See Fig. 3.

2.1.3.2 Style WSB. The letter "B," added to the WS designation, indicates a tool used for turning with a 5 degree lead angle. See Fig. 4.

2.2 Shank Cross Section Designations

2.2.1 Rectangular Shank Sizes. Two digits are to designate the rectangular shank sizes. The first digit expresses the width in $\frac{1}{8}$ths of an inch (3.18mm); the second expresses the height in ¼ths of an inch (6.35mm). Exceptions: In style WS, the $\frac{7}{8}$ x $1\frac{1}{8}$ inch size is assigned the number 75 and in style JL, the $\frac{11}{16}$ x $\frac{7}{8}$ inch size is assigned the number 12.

2.2.2 Square Shank Sizes. The number given expresses the width and height in $\frac{1}{16}$ths of an inch (1.588mm).

COPYRIGHT American Society of Mechanical Engineers
Licensed by Information Handling Services

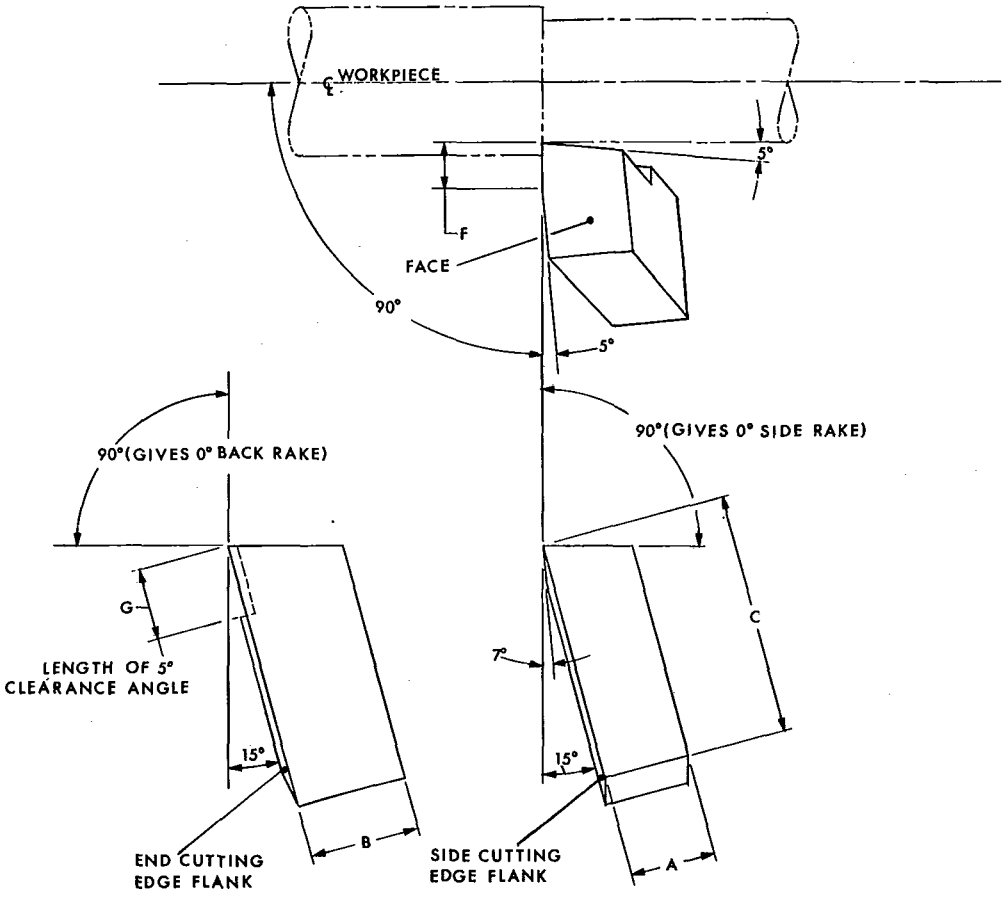

Fig. 1 Roller Turner Tools, Style GS-15 x 15 Degree Compound Angle For Square Shoulder Turning

Tool Designation	Tool Dimensions							
	A		B		C		E	
	Inch	mm	Inch	mm	Inch	mm	Inch	mm
GS-43	$0.500^{+0.000}_{-0.010}$	$12.70^{+0.00}_{-0.25}$	$0.750^{+0.000}_{-0.010}$	$19.05^{+0.00}_{-0.25}$	2.75 ±0.12	69.8 ±3.2	0.031	0.79
GS-16	$1.000^{+0.000}_{-0.010}$	$25.40^{+0.00}_{-0.25}$	$1.000^{+0.000}_{-0.010}$	$25.40^{+0.00}_{-0.25}$	3.50 ±0.12	88.9 ±3.2	0.031	0.79
GS-20	$1.250^{+0.000}_{-0.015}$	$31.75^{+0.00}_{-0.38}$	$1.250^{+0.000}_{-0.015}$	$31.75^{+0.00}_{-0.38}$	4.00 ±0.12	101.6 ±3.2	0.062	1.59

	F		G	
	Inch	mm	Inch	mm
GS-43	0.312	7.94	0.500 ±0.12	12.70 ±3.2
GS-16	0.375	9.52	1.000 ±0.12	25.40 ±3.2
GS-20	0.625	15.88	1.250 ±0.12	31.75 ±3.2

COPYRIGHT American Society of Mechanical Engineers
Licensed by Information Handling Services

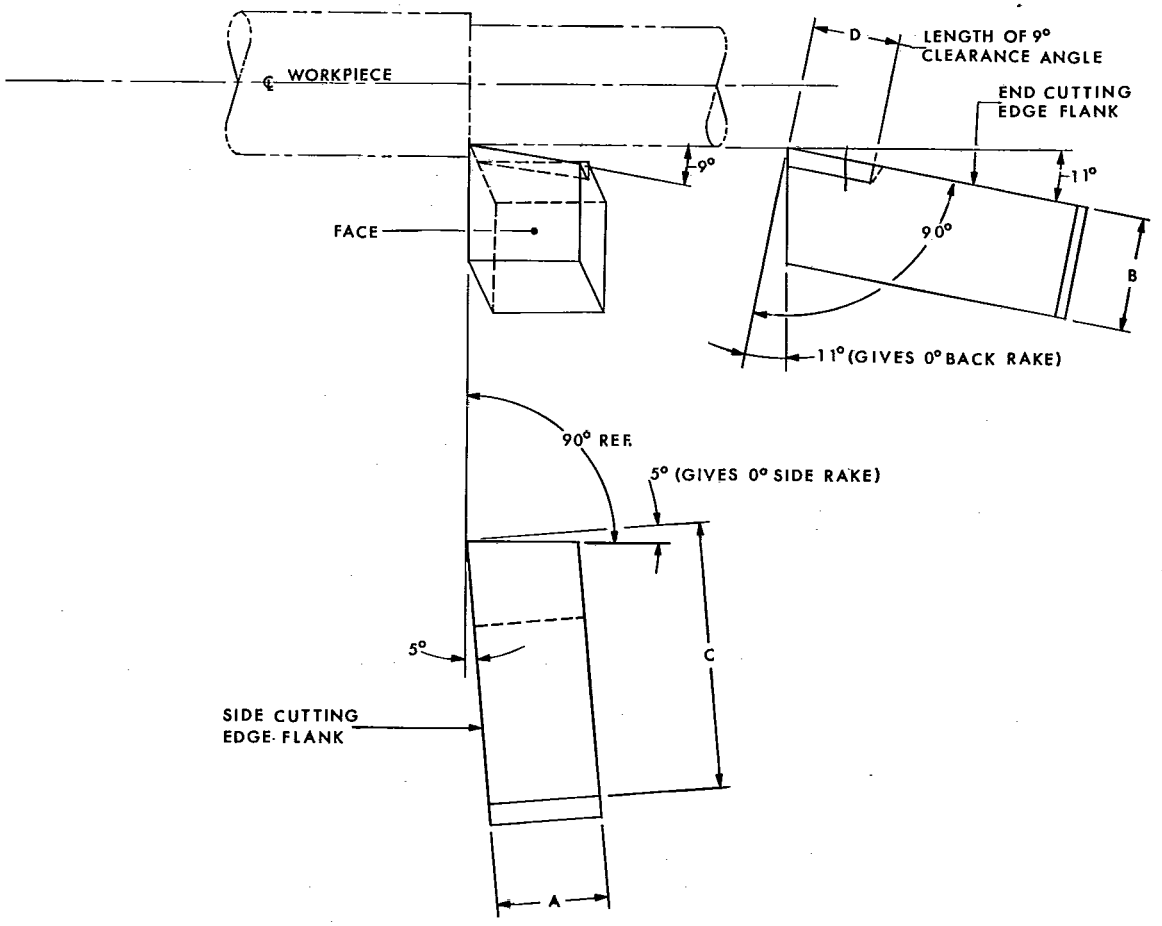

Fig. 2 Roller Turner Tools, Style JL-5 Degree Angle For Square Shoulder Turning

Tool Designation	Tool Dimensions							
	A		B		C		E	
	Inch	mm	Inch	mm	Inch	mm	Inch	mm
JL-32	$0.375^{+0.000}_{-0.010}$	$9.52^{+0.00}_{-0.25}$	$0.500^{+0.000}_{-0.010}$	$12.70^{+0.00}_{-0.25}$	2.50 ±0.12	63.50 ±3.2	0.375	9.52
JL-12	$0.688^{+0.000}_{-0.010}$	$17.47^{+0.00}_{-0.25}$	$0.750^{+0.000}_{-0.010}$	$19.05^{+0.00}_{-0.25}$	3.75 ±0.12	95.25 ±3.2	0.625	15.87
JL-64	$0.750^{+0.000}_{-0.010}$	$19.05^{+0.00}_{-0.25}$	$1.000^{+0.000}_{-0.010}$	$25.40^{+0.00}_{-0.25}$	4.25 ±0.12	107.95 ±3.2	0.750	19.05
JL-85	$1.000^{+0.000}_{-0.010}$	$25.40^{+0.00}_{-0.25}$	$1.250^{+0.000}_{-0.015}$	$31.75^{+0.00}_{-0.38}$	5.25 ±0.12	133.35 ±3.2	0.750	19.05
JL-86	$1.000^{+0.000}_{-0.010}$	$25.40^{+0.00}_{-0.25}$	$1.500^{+0.000}_{-0.015}$	$38.10^{+0.00}_{-0.38}$	7.00 ±0.12	177.80 ±3.2	0.625	15.87

COPYRIGHT American Society of Mechanical Engineers
Licensed by Information Handling Services

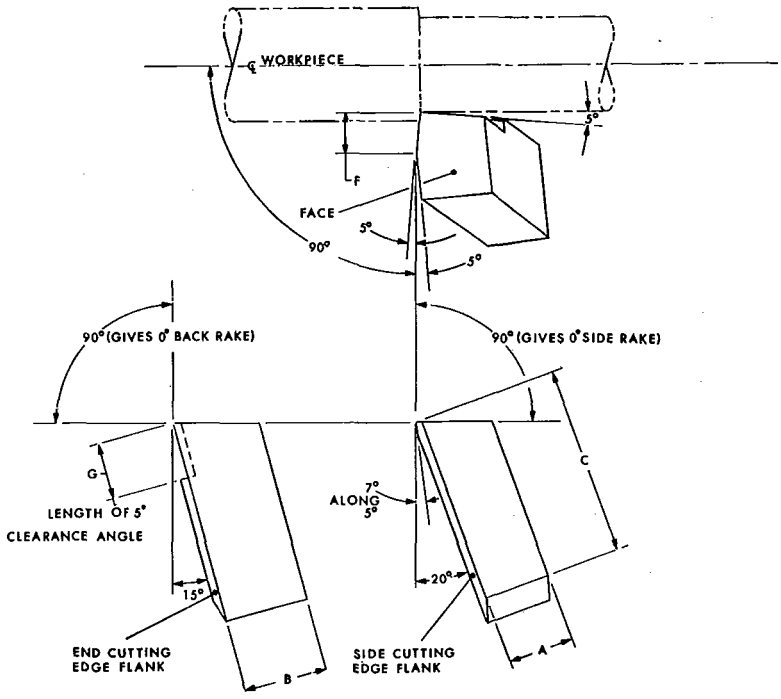

Fig. 3 Roller Turner Tools, Style WSA-15 x 20 Degree Compound Angle For Square Shoulder Turning

Tool Designation	Tool Dimensions							
	A		B		C		E	
	Inch	mm	Inch	mm	Inch	mm	Inch	mm
WSA-32	$0.375^{+0.000}_{-0.010}$	$9.53^{+0.00}_{-0.25}$	$0.500^{+0.000}_{-0.010}$	$12.70^{+0.00}_{-0.25}$	1.50 ±0.12	38.1 ±3.2	0.031	0.79
WSA-43	$0.500^{+0.000}_{-0.010}$	$12.70^{+0.00}_{-0.25}$	$0.750^{+0.000}_{-0.010}$	$19.05^{+0.00}_{-0.25}$	2.62 ±0.12	66.7 ±3.2	0.031	0.79
WSA-64	$0.750^{+0.000}_{-0.010}$	$19.05^{+0.00}_{-0.25}$	$1.000^{+0.000}_{-0.010}$	$25.40^{+0.00}_{-0.25}$	3.00 ±0.12	76.2 ±3.2	0.047	1.19
WSA-75	$0.875^{+0.000}_{-0.010}$	$22.22^{+0.00}_{-0.25}$	$1.125^{+0.000}_{-0.015}$	$28.58^{+0.00}_{-0.38}$	3.62 ±0.12	92.1 ±3.2	0.047	1.19
WSA-85	$1.000^{+0.000}_{-0.010}$	$25.40^{+0.00}_{-0.25}$	$1.250^{+0.000}_{-0.015}$	$31.75^{+0.00}_{-0.38}$	4.00 ±0.12	101.6 ±3.2	0.047	1.19

	F		G	
	Inch	mm	Inch	mm
WSA-32	0.312	7.94	0.375 ±0.12	9.53 ±3.2
WSA-43	0.312	7.94	0.500 ±0.12	12.70 ±3.2
WDA-64	0.438	11.11	0.750 ±0.12	19.05 ±3.2
WSA-75	0.438	11.11	0.875 ±0.12	22.22 ±3.2
WSA-85	0.438	11.11	1.000 ±0.12	25.40 ±3.2

COPYRIGHT American Society of Mechanical Engineers
Licensed by Information Handling Services

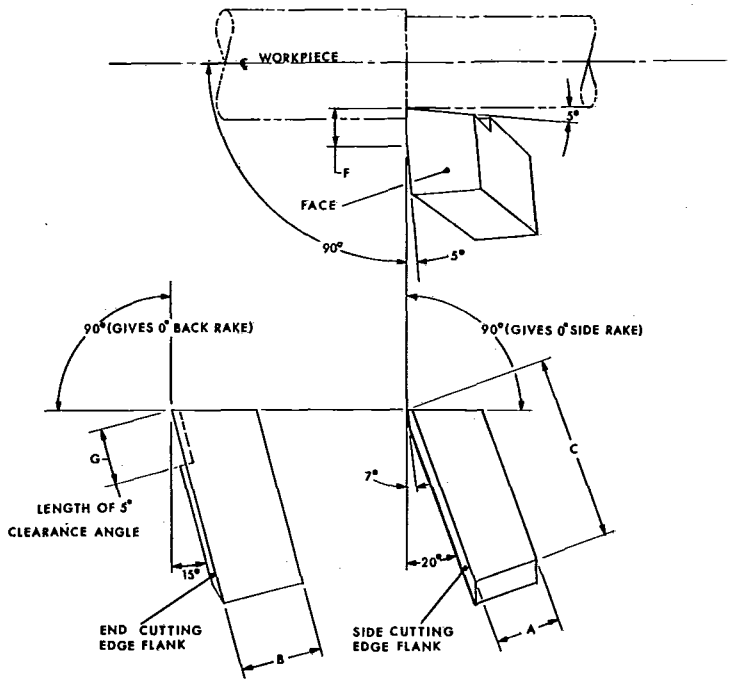

Fig. 4 Roller Turner Tools, Style WSB-15 x 20 Degree Compound Angle For 5 Degree Lead Angle Turning

Tool Designation	Tool Dimensions							
	A		B		C		E	
	Inch	mm	Inch	mm	Inch	mm	Inch	mm
WSB-32	0.375 $^{+0.000}_{-0.010}$	9.52 $^{+0.00}_{-0.25}$	0.500 $^{+0.000}_{-0.010}$	12.70 $^{+0.00}_{-0.25}$	1.50 ±0.12	38.1 ±3.2	0.062	1.59
WSB-43	0.500 $^{+0.000}_{-0.010}$	12.70 $^{+0.00}_{-0.25}$	0.750 $^{+0.000}_{-0.010}$	19.05 $^{+0.00}_{-0.25}$	2.62 ±0.12	66.7 ±3.2	0.062	1.59
WSB-64	0.750 $^{+0.000}_{-0.010}$	19.05 $^{+0.00}_{-0.25}$	1.000 $^{+0.000}_{-0.010}$	25.40 $^{+0.00}_{-0.25}$	3.00 ±0.12	76.2 ±3.2	0.078	1.95
WSB-75	0.875 $^{+0.000}_{-0.010}$	22.22 $^{+0.00}_{-0.25}$	1.125 $^{+0.000}_{-0.015}$	28.58 $^{+0.00}_{-0.38}$	3.62 ±0.12	92.1 ±3.2	0.078	1.98
WSB-85	1.000 $^{+0.000}_{-0.010}$	25.40 $^{+0.00}_{-0.25}$	1.250 $^{+0.000}_{-0.015}$	31.75 $^{+0.00}_{-0.38}$	4.00 ±0.12	101.6 ±3.2	0.078	1.98

	F		G	
	Inch	mm	Inch	mm
WSB-32	0.312	7.94	0.375 ±0.12	9.52 ±3.2
WSB-43	0.312	7.94	0.500 ±0.12	12.70 ±3.2
WSB-64	0.438	11.11	0.750 ±0.12	19.05 ±3.2
WSB-75	0.438	11.11	0.875 ±0.12	22.22 ±3.2
WSB-85	0.438	11.11	1.000 ±0.12	25.40 ±3.2

COPYRIGHT American Society of Mechanical Engineers
Licensed by Information Handling Services