AMERICAN NATIONAL STANDARD

Drill Drivers, Split-Sleeve, Collet Type

ANSI B94.35 - 1972

[REVISION OF ANSI B94.35-1959 (R1971)]

REAFFIRMED 2005

FOR CURRENT COMMITTEE PERSONNEL
PLEASE E-MAIL CS@asme.org

REAFFIRMED 1995

FOR CURRENT COMMITTEE PERSONNEL
PLEASE SEE ASME MANUAL AS-11

PLEASE SEE ASME MANUAL AS-11

SECRETARIAT

THE AMERICAN SOCIETY OF MECHANICAL ENGINEERS

PUBLISHED BY

THE AMERICAN SOCIETY OF MECHANICAL ENGINEERS

United Engineering Center 345 East 47th Street New York, N. Y. 10017

Copyright ASME International
Provided by IHS under license with ASME
No reproduction or networking permitted without license from IHS

Not for Resale

Any part of this standard may be quoted. Credit lines should read: "Extracted from American National Standard Drill Drivers-Split Sleeve, Collet Type, ANSI B94.35-1972, with the permission of the publisher, The American Society of Mechanical Engineers, 345 East 47th Street, New York, N.Y. 10017."

Copyright, © 1972, by
THE AMERICAN SOCIETY OF MECHANICAL ENGINEERS
Printed in U. S. A.

opyright ASME International
ovided by IHS under license with ASME
reproduction or networking permitted without license from IHS
Not for Resale

FOREWORD

Throughout American industry a variety of methods and mechanisms are used to drive twist drills, reamers, etc. In the automotive and other mass production industries, the split-sleeve collet drive has proven useful. Two engineering reasons for its suitability are: (1) Multiple spindle drill heads can be designed with spindles on a very close center-to-center distance; (2) Bushing plates do not have to be moved when tools must be replaced.

The split-sleeve collet driver is designed to drive straight shanks in sizes #61 (0.0390) inch diameter and larger.

As the assembly of split sleeve collet-type driver necessitates manufacture to close tolerances, it was deemed advisable to develop an American standard to insure that collets would fit drill shanks as shown in ANSI B94.11-1967.

The required ASA approval and designation as American Standard Drill Drivers was granted on September 23, 1959, and designated ASA B5.27-1959. ASA B5.27-1959 was redesignated and reaffirmed as ANSI B94.35-1959 (R1971).

ANSI B94.35-1959 (R1971) was reviewed in relation to industry needs and revised and updated by a subcommittee of Technical Committee 7 of American National Standards Committee B94.

Sizes no longer used were eliminated from the standard. Document was reviewed for conformance with American National Standard Decimal Inch, ANSI B87.1-1965.

The current revision was approved by ANSI on May 30, 1972.

Copyright ASME International
Provided by IHS under license with ASME
No reproduction or networking permitted without license from IHS
Not for Resale

AMERICAN NATIONAL STANDARDS COMMITTEE B94

STANDARDIZATION OF CUTTING TOOLS, HOLDERS, DRIVERS & BUSHINGS

(The following is the roster of the Committee at the time of approval of this standard)

OFFICERS

H.J. Moffatt, ***Chairman***
A.M. Mezey, ***Vice-Chairman***
H. McLinden, ***Secretary***

STANDARDS COMMITTEE

AMERICAN GEAR MANUFACTURERS ASSOCIATION, THE
P.M. Dean, Jr., Mechanical Technology, Inc., Latham, New York
G.L. Scott, Alternate, American Gear Manufacturers Association, Washington, D.C.

AMERICAN SOCIETY OF MECHANICAL ENGINEERS, THE
M.E. Merchant, Cincinnati Milacron, Inc., Cincinnati, Ohio
G.M. Monacelli, General Electric Company, Detroit, Michigan
C.J. Oxford, Jr., National Twist Drill & Tool Company, Rochester, Michigan

CEMENTED CARBIDE PRODUCERS ASSOCIATION
W.E. Montgomery, Firth Sterling, Inc., McKeesport, Pennsylvania
A.P. Wherry, Alternate, Cemented Carbide Producers Association, Cleveland, Ohio

GENERAL SERVICES ADMINISTRATION
W.C. Petrie, General Services Administration, Washington, D.C.

METAL CUTTING TOOL INSTITUTE
L.P. Sohles, Morse Twist Drill & Machine Company, New Bedford, Massachusetts
P.L. Houser, Alternate, Metal Cutting Tool Institute, New York, New York

NATIONAL ASSOCIATION OF PUNCH MANUFACTURERS
R.J. Gargrave, Dayton Progress Corporation, Dayton, Ohio

NATIONAL BUREAU OF STANDARDS
J.R. Pidgeon, National Bureau of Standards, Washington, D.C.

SOCIETY OF AUTOMOTIVE ENGINEERS
A.J. McLaren, The Cross Company, Fraser, Michigan
W.H. Seacord, International Harvester Company, Hinsdale, Illinois

SOCIETY OF CARBIDE ENGINEERS
C.H. Lang, Society of Carbide Engineers, Milford, Connecticut

SOCIETY OF MANUFACTURING ENGINEERS
K.A. Lundell, The Producto Machine Company, Jamestown, New York
H.J. Moffatt, Caterpillar Tractor Co., East Peoria, Illinois

TELEPHONE GROUP
M.C. Berryman, Western Electric Company, Inc., Chicago, Illinois
S.P. Rogacki, Alternate, Western Electric Company, Inc., Kearney, New Jersey

UNITED STATES DEPARTMENT OF THE AIR FORCE
J.O. Snyder, Liaison, Air Materials Laboratory, Wright-Patterson Air Force Base, Ohio

UNITED STATES DEPARTMENT OF THE ARMY
R.K. Freeman, Liaison, United States Weapons Command, Rock Island, Illinois
J.N. Segura, Alternate, United States Weapons Command, Rock Island, Illinois

Copyright ASME International
Provided by IHS under license with ASME
No reproduction or networking permitted without license from IHS
Not for Resale

UNITED STATES DEPARTMENT OF THE NAVY

J.N. Cornette, Liaison, Naval Ship Systems Command, Washington, D.C.

INDIVIDUAL COMPANIES

Anderson Ashburn, American Machinist, New York, New York
F.P. Brown, Vienna, Virginia
William Hofbauer, Mohawk Tools, Inc., Montpelier, Ohio
D.G. Jones, Kenametal, Inc., Latrobe, Pennsylvania
K.B. Kaiser, The Ingersoll Milling Machine Company, Rockford, Illinois
A.M. Mezey, Richards Brothers Punch Company, Detroit, Michigan
H. McLinden, Caterpillar Tractor Company, East Peoria, Illinois
W.A. Wagner, The Cleveland Twist Drill Company, Cleveland, Ohio

Personnel of Technical Committee No. 7 on Twist Drills

W.F. Morgan, Chairman, Caterpillar Tractor Co., East Peoria, Illinois
B.R. Better, Scully-Jones and Company, Chicago, Illinois
J.N. Cornette, Department of the Navy, Washington, D.C.
Richard Gulbrandson, Republic Drill and Tool Company, Chicago, Illinois
E.J. Gully, International Harvester Company, Chiago, Illinois
W. Hofbauer, Mohawk Tools, Inc., Montpelier, Ohio
N.P. Hopwood, Jr., Ford Motor Company, Dearborn, Michigan
P.L. Houser, Metal Cutting Tool Institute, New York, New York
E.M. McCullough, Deere and Company, Moline, Illinois
N.F. Nau, Union Twist Drill and Tool Company, Athol, Massachusetts
C.J. Oxford, Jr., National Twist Drill and Tool Company, Rochester, Michigan
E.M. Rolnick, Morse Twist Drill and Machine Company, New Bedford, Massachussetts
J.O. Snyder, Liaison, Wright-Patterson Air Force Base, Dayton, Ohio
J.F. Strnad, Western Electric Company, Chicago, Illinois
Chester Strzalka, Chicago-Latrobe, Chicago, Illinois
C.J. Trible, General Motors Technical Center, Warren, Michigan
Charles Vejvoda, Grumman Aircraft Engineering Corporation, Bethpage, New York
W.A. Wagner, Cleveland Twist Drill Company, Cleveland, Ohio

Personnel of Subcommittee on Drivers - Split Sleeves

B.R. Better	J.O. Snyder	W.A. Wagner
N.F. Nau	A. Stahley	R.J. Waldorf

Copyright ASME International
Provided by IHS under license with ASME
No reproduction or networking permitted without license from IHS
Not for Resale

AMERICAN NATIONAL STANDARD

DRILL DRIVERS–SPLIT SLEEVE, COLLECT TYPE

INTRODUCTORY NOTES

1. SCOPE

1.1 This standard covers split sleeve, collet type drivers for driving straight shank drills, reamers and similar tools, without tangs from 0.0390 dia. through 0.1220 dia., and with tangs for tools from 0.1250 dia. through 0.7500 dia.

2. PURPOSE

2.1 The purpose of this standard is to make available to industry the types and sizes of drivers that will serve industry as a whole.

3. GENERAL SPECIFICATIONS

All dimensions in this standard are in inches.

Inside Diameter (A):

(0.0390) to (0.1562)
- Min = nominal minus 0.0010
- Max = nominal

Above (0.1562 to (0.2500), incl.
- Min = nominal minus 0.0015
- Max = nominal minus 0.0005

Above (0.2500) to (0.5000), incl.
- Min = nominal minus 0.0020
- Max = nominal minus 0.0010

Above (0.5000) to (0.750), incl.
- Min = nominal
- Max = nominal plus 0.0010

Concentricity of Hole (A):

The bore and shank shall be ground concentric within 0.002 in. total indicator reading, gaged at a distance equal to the projection of a standard jobbers drill from the chuck.

Concentricity of Tang Slot (E):

From 0.125 to 0.259, incl. = 0.006 total indicator reading
Above 0.259 to 0.534, incl. = 0.007 total indicator reading
Above 0.534 to 0.750, incl. = 0.008 total indicator reading

Two Place Decimal Dimensions - $\pm$ 0.04

Diameter at Gaging Notch (H):

Plus 0.002, minus 0.000 in.

Finish:

All essential surfaces must be ground, or ground and lapped.

Marking:

Size, and manufacturer's name or trade mark are to be marked on the unground portion of the shank.

Copyright ASME International
Provided by IHS under license with ASME
No reproduction or networking permitted without license from IHS
Not for Resale

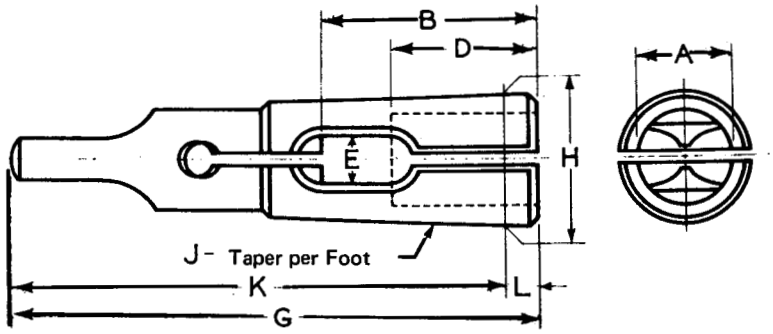

Table 1: General Dimensions of Drill Drivers[1]

TAPER NUMBER	G OVER-ALL LENGTH	H DIAMETER AT GAGE LINE	J TAPER PER FOOT	K LENGTH TO GAGE LINE	L DRIVER PROJECTION
0[2]	2.38	0.356	0.62460	2.22	0.16
1	2.62	0.475	0.59858	2.44	0.19
2	3.19	0.700	0.59941	2.94	0.25
3	3.94	0.938	0.60235	3.69	0.25
4	5.00	1.231	0.62326	4.62	0.38

[1]Taper rate in accordance with ANSI B5.10-1963, Machine Tapers
[2]Size 0 is not an American Standard but is included here to meet special needs.

See page 1 for general specifications

All dimensions are in inches.

Copyright ASME International
Provided by IHS under license with ASME
No reproduction or networking permitted without license from IHS
Not for Resale

Table 2 Dimensions of Drivers

DRIVER SIZE		STANDARD TAPER NUMBER	OPTIONAL TAPER NUMBER	OPTIONAL TAPER NUMBER	INSIDE DIAMETER A		B DEPTH DRILL ENTERS DRIVER	D INSIDE DIAMETER LENGTH	E TANG SLOT WIDTH	
SIZE	DECIMAL				MIN	MAX			MIN	MAX
61	0.0390	1	0	....	0.0380	0.0390	0.44	....	....	....
60	0.0400	1	0	....	0.0390	0.0400	0.44	....	....	....
59	0.0410	1	0	....	0.0400	0.0410	0.44	....	....	....
58	0.0420	1	0	....	0.0410	0.0420	0.44	....	....	....
57	0.0430	1	0	....	0.0420	0.0430	0.44	....	....	....
1.15MM	0.0453	1	0	....	0.0443	0.0453	0.44	....	....	....
56	0.0465	1	0	....	0.0455	0.0465	0.44	....	....	....
3/64	0.0469	1	0	....	0.0459	0.0469	0.44	....	....	....
1.25MM	0.0492	1	0	....	0.0482	0.0492	0.44	....	....	....
1.30MM	0.0512	1	0	....	0.0502	0.0512	0.44	....	....	....
55	0.0520	1	0	....	0.0510	0.0520	0.44	....	....	....
1.35MM	0.0531	1	0	....	0.0521	0.0531	0.44	....	....	....
54	0.0550	1	0	....	0.0540	0.0550	0.44	....	....	....
1.45MM	0.0571	1	0	....	0.0561	0.0571	0.44	....	....	....
53	0.0595	1	0	....	0.0585	0.0595	0.44	....	....	....
1.55MM	0.0610	1	0	2	0.0600	0.0610	0.44	....	....	....
1/16	0.0625	1	0	2	0.0615	0.0625	0.44	....	....	....
1.65MM	0.0650	1	0	2	0.0640	0.0650	0.44	....	....	....
51	0.0670	1	0	2	0.0660	0.0670	0.44	....	....	....
50	0.0700	1	0	2	0.0690	0.0700	0.44	....	....	....
49	0.0730	1	0	2	0.0720	0.0730	0.44	....	....	....
48	0.0760	1	0	2	0.0750	0.0760	0.44	....	....	....
5/64	0.0781	1	0	2	0.0771	0.0781	0.44	....	....	....
47	0.0785	1	0	2	0.0775	0.0785	0.50	....	....	....
46	0.0810	1	0	2	0.0800	0.0810	0.50	....	....	....
45	0.0820	1	0	2	0.0810	0.0820	0.50	....	....	....
2.1MM	0.0827	1	0	2	0.0817	0.0827	0.50	....	....	....
44	0.0860	1	0	2	0.0850	0.0860	0.50	....	....	....
43	0.0890	1	0	2	0.0880	0.0890	0.50	....	....	....
2.3MM	0.0906	1	0	2	0.0896	0.0906	0.50	....	....	....
3/32	0.0938	1	0	2	0.0928	0.0938	0.50	....	....	....
41	0.0960	1	0	2	0.0950	0.0960	0.56	....	....	....
40	0.0980	1	0	2	0.0970	0.0980	0.56	....	....	....
39	0.0995	1	0	2	0.0985	0.0995	0.56	....	....	....
38	0.1015	1	0	2	0.1005	0.1015	0.56	....	....	....
2.6MM	0.1024	1	0	2	0.1014	0.1024	0.56	....	....	....

All dimensions are in inches.

Copyright ASME International
Provided by IHS under license with ASME
No reproduction or networking permitted without license from IHS

Not for Resale

Table 2 Dimensions of Drivers (continued)

DRIVER SIZE		STANDARD TAPER NUMBER	OPTIONAL TAPER NUMBER	OPTIONAL TAPER NUMBER	INSIDE DIAMETER A		B DEPTH DRILL ENTERS DRIVER	D INSIDE DIAMETER LENGTH	E TANG SLOT WIDTH	
SIZE	DECIMAL				MIN	MAX			MIN	MAX
37	0.1040	1	0	2	0.1030	0.1040	0.56	....	....	....
36	0.1065	1	0	2	0.1055	0.1065	0.56	....	....	....
7/64	0.1094	1	0	2	0.1084	0.1094	0.56	....	....	....
35	0.1100	1	0	2	0.1090	0.1100	0.62	....	....	....
34	0.1110	1	0	2	0.1100	0.1110	0.62	....	....	....
33	0.1130	1	0	2	0.1120	0.1130	0.62	....	....	....
32	0.1160	1	0	2	0.1150	0.1160	0.62	....	....	....
31	0.1200	1	0	2	0.1190	0.1200	0.62	....	....	....
3.1MM	0.1220	1	0	2	0.1210	0.1220	0.62	....	....	....
1/8	0.1250	1	0	2	0.1240	0.1250	0.75	0.59	0.106	0.110
30	0.1285	1	0	2	0.1275	0.1285	0.75	0.59	0.106	0.110
3.3MM	0.1299	1	0	2	0.1289	0.1299	0.75	0.59	0.106	0.110
3.4MM	0.1339	1	0	2	0.1329	0.1339	0.75	0.59	0.106	0.110
29	0.1360	1	0	2	0.1350	0.1360	0.75	0.59	0.106	0.110
3.5MM	0.1378	1	0	2	0.1368	0.1378	0.75	0.59	0.106	0.110
9/64	0.1406	1	0	2	0.1396	0.1406	0.75	0.59	0.106	0.110
27	0.1440	1	0	2	0.1430	0.1440	0.75	0.59	0.106	0.110
26	0.1470	1	0	2	0.1460	0.1470	0.75	0.59	0.106	0.110
25	0.1495	1	0	2	0.1485	0.1495	0.75	0.59	0.106	0.110
24	0.1520	1	0	2	0.1510	0.1520	0.75	0.59	0.106	0.110
23	0.1540	1	0	2	0.1530	0.1540	0.75	0.59	0.106	0.110
5/32	0.1562	1	0	2	0.1552	0.1562	0.75	0.59	0.106	0.110
22	0.1570	1	0	2	0.1555	0.1565	0.75	0.59	0.106	0.110
21	0.1590	1	0	2	0.1575	0.1585	0.75	0.59	0.106	0.110
20	0.1610	1	0	2	0.1595	0.1605	0.75	0.59	0.106	0.110
19	0.1660	1	0	2	0.1645	0.1655	0.75	0.59	0.106	0.110
18	0.1695	1	0	2	0.1680	0.1690	0.75	0.59	0.106	0.110
11/64	0.1719	1	0	2	0.1704	0.1714	0.75	0.59	0.106	0.110
17	0.1730	1	0	2	0.1715	0.1725	0.75	0.59	0.106	0.110
16	0.1770	1	0	2	0.1755	0.1765	0.75	0.59	0.106	0.110
15	0.1800	1	0	2	0.1785	0.1795	0.75	0.59	0.106	0.110
14	0.1820	1	0	2	0.1805	0.1815	0.75	0.59	0.106	0.110
13	0.1850	1	0	2	0.1835	0.1845	0.75	0.59	0.106	0.110
3/16	0.1875	1	0	2	0.1860	0.1870	0.75	0.59	0.106	0.110
12	0.1890	1	2	0	0.1875	0.1885	0.88	0.69	0.134	0.138
11	0.1910	1	2	0	0.1895	0.1905	0.88	0.69	0.134	0.138
10	0.1935	1	2	0	0.1920	0.1930	0.88	0.69	0.134	0.138

All dimensions are in inches.

opyright ASME International
rovided by IHS under license with ASME
o reproduction or networking permitted without license from IHS
Not for Resale

Table 2 Dimensions of Drivers (continued)

DRIVER SIZE					INSIDE DIAMETER A		B DEPTH DRILL ENTERS DRIVER	D INSIDE DIAMETER LENGTH	E TANG SLOT WIDTH	
SIZE	DECIMAL	STANDARD TAPER NUMBER	OPTIONAL TAPER NUMBER	OPTIONAL TAPER NUMBER	MIN	MAX			MIN	MAX
9	0.1960	1	2	0	0.1945	0.1955	0.88	0.69	0.134	0.138
8	0.1990	1	2	0	0.1975	0.1985	0.88	0.69	0.134	0.138
7	0.2010	1	2	0	0.1995	0.2005	0.88	0.69	0.134	0.138
13/64	0.2031	1	2	0	0.2016	0.2026	0.88	0.69	0.134	0.138
6	0.2040	1	2	0	0.2025	0.2035	0.88	0.69	0.134	0.138
5	0.2055	1	2	0	0.2040	0.2050	0.88	0.69	0.134	0.138
4	0.2090	1	2	0	0.2075	0.2085	0.88	0.69	0.134	0.138
3	0.2130	1	2	0	0.2115	0.2125	0.88	0.69	0.134	0.138
7/32	0.2188	1	2	0	0.2173	0.2183	0.88	0.69	0.134	0.138
2	0.2210	1	2	0	0.2195	0.2205	0.88	0.69	0.134	0.138
5.7MM	0.2244	1	2	0	0.2229	0.2239	0.88	0.69	0.134	0.138
1	0.2280	1	2	0	0.2265	0.2275	0.88	0.69	0.134	0.138
A	0.2340	1	2	0	0.2325	0.2335	0.88	0.69	0.134	0.138
15/64	0.2344	1	2	0	0.2329	0.2339	0.88	0.69	0.134	0.138
B	0.2380	1	2	0	0.2365	0.2375	0.88	0.69	0.134	0.138
6.1MM	0.2402	1	2	0	0.2387	0.2397	0.88	0.69	0.134	0.138
C	0.2420	1	2	0	0.2405	0.2415	0.88	0.69	0.134	0.138
D	0.2460	1	2	0	0.2445	0.2455	0.88	0.69	0.134	0.138
1/4	0.2500	1	2	0	0.2485	0.2495	0.88	0.69	0.134	0.138
6.4MM	0.2520	1	2	0	0.2500	0.2510	1.00	0.78	0.174	0.178
F	0.2570	1	2	....	0.2550	0.2560	1.00	0.78	0.174	0.178
G	0.2610	1	2	....	0.2590	0.2600	1.00	0.78	0.174	0.178
17/64	0.2656	1	2	....	0.2636	0.2646	1.00	0.78	0.174	0.178
I	0.2720	1	2	....	0.2700	0.2710	1.00	0.78	0.174	0.178
J	0.2770	1	2	....	0.2750	0.2760	1.00	0.78	0.174	0.178
9/32	0.2812	1	2	....	0.2792	0.2802	1.00	0.78	0.174	0.178
7.25MM	0.2854	1	2	....	0.2834	0.2844	1.00	0.78	0.174	0.178
L	0.2900	1	2	....	0.2880	0.2890	1.00	0.78	0.174	0.178
7.4MM	0.2913	1	2	....	0.2893	0.2903	1.00	0.78	0.174	0.178
M	0.2950	1	2	....	0.2930	0.2940	1.00	0.78	0.174	0.178
19/64	0.2969	1	2	....	0.2949	0.2959	1.00	0.78	0.174	0.178
N	0.3020	1	2	....	0.3000	0.3010	1.00	0.78	0.174	0.178
7.8MM	0.3071	1	2	....	0.3051	0.3061	1.00	0.78	0.174	0.178
5/16	0.3125	1	2	....	0.3105	0.3115	1.00	0.78	0.174	0.178
O	0.3160	1	2	....	0.3140	0.3150	1.12	0.88	0.215	0.219
P	0.3230	1	2	....	0.3210	0.3220	1.12	0.88	0.215	0.219
21/64	0.3281	1	2	....	0.3261	0.3271	1.12	0.88	0.215	0.219

All dimensions are in inches.

Copyright ASME International
Provided by IHS under license with ASME
No reproduction or networking permitted without license from IHS
Not for Resale

Table 2 Dimensions of Drivers (concluded)

DRIVER SIZE					INSIDE DIAMETER A		B DEPTH DRILL ENTERS DRIVER	D INSIDE DIAMETER LENGTH	E TANG SLOT WIDTH	
SIZE	DECIMAL	STANDARD TAPER NUMBER	OPTIONAL TAPER NUMBER	OPTIONAL TAPER NUMBER	MIN	MAX			MIN	MAX
Q	0.3320	1	2	....	0.3300	0.3310	1.12	0.88	0.215	0.219
R	0.3390	1	2	....	0.3370	0.3380	1.12	0.88	0.215	0.219
11/32	0.3438	1	2	....	0.3418	0.3428	1.12	0.88	0.215	0.219
S	0.3480	1	2	....	0.3460	0.3470	1.12	0.88	0.215	0.219
9.0MM	0.3543	1	2	....	0.3523	0.3533	1.12	0.88	0.215	0.219
T	0.3580	1	2	....	0.3560	0.3570	1.12	0.88	0.215	0.219
23/64	0.3594	1	2	....	0.3574	0.3584	1.12	0.88	0.215	0.219
U	0.3680	1	2	....	0.3660	0.3670	1.12	0.88	0.215	0.219
3/8	0.3750	1	2	....	0.3730	0.3740	1.12	0.88	0.215	0.219
W	0.3860	2	3	....	0.3840	0.3850	1.25	0.94	0.255	0.259
25/64	0.3906	2	3	....	0.3886	0.3896	1.25	0.94	0.255	0.259
X	0.3970	2	3	....	0.3950	0.3960	1.25	0.94	0.255	0.259
Y	0.4040	2	3	....	0.4020	0.4030	1.25	0.94	0.255	0.259
13/32	0.4062	2	3	....	0.4042	0.4052	1.25	0.94	0.255	0.259
Z	0.4130	2	3	....	0.4110	0.4120	1.25	0.94	0.255	0.259
27/64	0.4219	2	3	....	0.4199	0.4209	1.25	0.94	0.255	0.259
7/16	0.4375	2	3	....	0.4355	0.4365	1.25	0.94	0.255	0.259
29/64	0.4531	2	3	....	0.4511	0.4521	1.25	0.94	0.255	0.259
15/32	0.4688	2	3	....	0.4668	0.4678	1.25	0.94	0.255	0.259
31/64	0.4844	2	3	....	0.4824	0.4834	1.31	0.94	0.317	0.323
1/2	0.5000	2	3	....	0.4980	0.4990	1.31	0.94	0.317	0.323
33/64	0.5156	2	3	....	0.5156	0.5166	1.31	0.94	0.317	0.323
17/32	0.5312	2	3	....	0.5312	0.5322	1.31	0.94	0.317	0.323
35/64	0.5469	2	3	....	0.5469	0.5479	1.31	0.94	0.317	0.323
9/16	0.5625	2	3	....	0.5625	0.5635	1.31	0.94	0.317	0.323
37/64	0.5781	3	4	....	0.5781	0.5791	1.47	1.03	0.387	0.393
19/32	0.5938	3	4	....	0.5938	0.5948	1.47	1.03	0.387	0.393
39/64	0.6094	3	4	....	0.6094	0.6104	1.47	1.03	0.387	0.393
5/8	0.6250	3	4	....	0.6250	0.6260	1.47	1.03	0.387	0.393
41/64	0.6406	3	4	....	0.6406	0.6416	1.47	1.03	0.387	0.393
21/32	0.6562	3	4	....	0.6562	0.6572	1.47	1.03	0.387	0.393
43/64	0.6719	3	4	....	0.6719	0.6729	1.62	1.12	0.457	0.463
11/16	0.6875	3	4	....	0.6875	0.6885	1.62	1.12	0.457	0.463
45/64	0.7031	3	4	....	0.7031	0.7041	1.62	1.12	0.457	0.463
23/32	0.7188	3	4	....	0.7188	0.7198	1.62	1.12	0.457	0.463
47/64	0.7344	3	4	....	0.7344	0.7354	1.62	1.12	0.457	0.463
3/4	0.7500	3	4	....	0.7500	0.7510	1.62	1.12	0.457	0.463

All dimensions are in inches.

Copyright ASME International
Provided by IHS under license with ASME
No reproduction or networking permitted without license from IHS
Not for Resale

AMERICAN NATIONAL STANDARDS FOR MACHINE TOOLS AND CUTTING TOOLS

T-Slots, Their Bolts, Nuts, Tongues, and Cutters	B5.1—1949
Rotating Air Cylinders and Adapters	B5.5—1959
Chucks and Chuck Jaws	B5.8—1972
Spindle Noses for Tool Room Lathes, Engine Lathes, Turret Lathes, and Automatic Lathes	B5.9—1967
Machine Tapers	B5.10—1963
Spindle Noses and Adjustable Adapters for Multiple Spindle Drilling Heads	B5.11—1964
Accuracy of Engine and Tool Room Lathes	B5.16—1952 (Reaffirmed 1972)
Spindle Noses and Arbors for Milling Machines	B5.18—1960
Machine Pins	B5.20—1958
Die Sets	B5.25—1968
Mounting Dimensions of Lubricating and Coolant Pumps for Machine Tools	B5.28—1971
Designation and Working Ranges of Grinding Machines	B5.32—1953
External Cylindrical Grinding Machines — Plain	(Rev. B5.33—1953) B5.33—1970
Machine Mounting Specifications for Abrasive Discs and Plate Mounted Wheels	B5.35—1969
External Cylindrical Grinding Machines — Centerless	B5.37—1970
Spindle Noses and Tool Shanks for Horizontal Boring Machines	B5.40—1968
Quill Flanges and Spindle Ends for Upright and Horizontal Drill Spindles for Production Type Drilling Machines	B5.41—1968
External Cylindrical Grinding Machines — Universal	B5.42—1970
Modular Machine Tool Standards	B5.43—1971
Rotary Table Surface Grinding Machines	B5.44—1971
Milling Machines	B5.45—1972
Symbols For Machine Tool Indicator Plates	B5.46—1972
Blanks and Semi-Finished Blanks for Solid Carbide Taps	B94.1—1969
Reamers	B94.2—1971
Straight Cut-Off Blades for Lathes and Screw Machines	B94.3—1965
Identification System for Throw Away Inserts for Cutting Tools	B94.4—1965
Carbide Blanks and Cutting Tools	B94.5—1966
Knurling	B94.6—1966
Hobs	B94.7—1966
Inserted Blade Milling Cutter Bodies	(Rev. B5.23—1958) B94.8—1967
Taps-Cut and Ground Threads	B94.9—1971
High-Speed Steel and Cast Nonferrous Single-Point Tools and Tool Holders	(Rev. B5.29—1959) B94.10—1967
Twist Drills	(Rev. B5.12—1958) B94.11—1967
Carbide-Tipped Masonry Drills, and Blanks for Carbide-Tipped Masonry Drills.	(Rev. B82.1—1962) B94.12—1968
Blanks for Carbide Burs	(Rev. B83.1—1962) B94.13—1968
Punches-Basic Head Type	B94.14—1968
Retainers — Basic Ball-Lock Punch and Die Button, Light and Heavy Duty	B94.16—1968
Gages — Functional, Ball-Lock Punch and Die Button, Light and Heavy Duty	B94.17—1968
Punches — Basic Ball-Lock Light and Heavy Duty	B94.18—1968
Milling, Cutters and End Mills	(Rev. B5.3—1960) B94.19—1968
Specifications for Carbide Blanks for Twist Drills, Reamers, End Mills, and Random Rod	(Rev. B85.1—1963) B94.20—1968
Gear Shaper Cutters	B94.21—1968
Punches-Variable Head Type	B94.22—1968
Punch Guide Bushings-Variable Press Fit	B94.23—1969
Heavy Duty Carbide Inserts for Cutting Tools	B94.24—1969
Indexable (Throw-Away) Inserts for Cutting Tools	(Partial Rev. B80.1—1959) B94.25—1969
Indexable (Throw-Away) Insert Holders	(Partial Rev. B80.1—1959) B94.26—1969
Die Buttons — Basic Taper Relief, Press Fit	B94.27—1970
Die Buttons — Basic Straight Relief, Press Fit.	B94.28—1970
Die Buttons — Basic Ball-Lock	B94.29—1970
Die Buttons — Variable, Press Fit	B94.30—1970
Steel Rotary Slitting Knives and Steel Spacing Collars	B94.31—1969
Circular and Dovetailed Forming Tools Blanks	(Redesignation of B5.7—1954) B94.32—1954 (Reaffirmed 1971)
Jig Bushings	(Redesignation of B5.6—1962) B94.33—1962 (Reaffirmed 1971)
Life Tests of Single Point Tools	(Redesignation of B5.19—1946) B94.34—1946 (Reaffirmed 1971)
Drill Drivers, Split-Sleeve, Collet Type	B94.35—1972
Life Tests for Single-Point Tools of Sintered Carbide	(Redesignation of B5.34—1956) B94.36—1956 (Reaffirmed 1971)
Carbide Blanks and Cutting Tools, single-Point Carbide-Tipped, Roller Turner Type	(Revis

Binders for holding standards are avai

A complete list of Standards published by The American Society of Mecl



J00030

Copyright ASME International
Provided by IHS under license with ASME
No reproduction or networking permitted without license from IHS
Not for Resale