ASME B94.33-1996
(Revision of ANSI B94.33-1974)

REAFFIRMED 2005

FOR CURRENT COMMITTEE PERSONNEL
PLEASE E-MAIL CS@asme.org

JIG BUSHINGS

AN AMERICAN NATIONAL STANDARD



The American Society of
Mechanical Engineers

Copyright ASME International
Provided by IHS under license with ASME
No reproduction or networking permitted without license from IHS

Not for Resale

The American Society of Mechanical Engineers

AN AMERICAN NATIONAL STANDARD

JIG BUSHINGS

ASME B94.33-1996
(Revision of ANSI B94.33-1974)

Copyright ASME International
Provided by IHS under license with ASME
No reproduction or networking permitted without license from IHS
Not for Resale

Date of Issuance: February 28, 1997

The 1996 edition of this Standard is being issued with an automatic addenda subscription service. The use of an addenda allows revisions made in response to public review comments or committee actions to be published as necessary. The next edition of this Standard is scheduled for publication in 2002.

ASME is the registered trademark of The American Society of Mechanical Engineers.

This code or standard was developed under procedures accredited as meeting the criteria for American National Standards. The Consensus Committee that approved the code or standard was balanced to assure that individuals from competent and concerned interests have had an opportunity to participate. The proposed code or standard was made available for public review and comment which provides an opportunity for additional public input from industry, academia, regulatory agencies, and the public-at-large.

ASME does not "approve," "rate," or "endorse" any item, construction, proprietary device, or activity.

ASME does not take any position with respect to the validity of any patent rights asserted in connection with any items mentioned in this document, and does not undertake to insure anyone utilizing a standard against liability for infringement of any applicable Letters Patent, nor assume any such liability. Users of a code or standard are expressly advised that determination of the validity of any such patent rights, and the risk of infringement of such rights, is entirely their own responsibility.

Participation by federal agency representative(s) or person(s) affiliated with industry is not to be interpreted as government or industry endorsement of this code or standard.

ASME accepts responsibility for only those interpretations issued in accordance with governing ASME procedures and policies which preclude the issuance of interpretations by individual volunteers.

No part of this document may be reproduced in any form,
in an electronic retrieval system or otherwise,
without the prior written permission of the publisher.

The American Society of Mechanical Engineers
345 East 47th Street, New York, NY 10017

Copyright © 1997 by
THE AMERICAN SOCIETY OF MECHANICAL ENGINEERS
All Rights Reserved
Printed in U.S.A.

Copyright ASME International
Provided by IHS under license with ASME
No reproduction or networking permitted without license from IHS
Not for Resale

FOREWORD

(This Foreword is not part of ASME B94.33-1996.)

This Standard for jig bushings was approved and designated as an American Standard by ASA in April, 1935. The use of this Standard by industry necessitated revision in December, 1937.

The Standard was revised and approved by the Sectional Committee in March, 1941. Approval and designation by ASA was given in August, 1941. The Standard was reaffirmed in 1949.

The TC-8 Committee was reactivated in December of 1957 to review and revise the Standard, if necessary. Requests for additional lengths, locking devices, locking dimensions, and a unified marking system by industry users were considered and approved by the committee in December, 1958.

Further additions and deletions were agreed upon by the committee at a meeting in April, 1960. With the exception of counterbores, the draft was approved. Specifications for counterbores were added, and the draft was distributed to committee members November 1, 1960. Committee members approved the draft, and it was submitted to TC-17 for approval. ASA approval was granted on June 22, 1962.

Fractional dimensions were changed to decimal inch, and the document was reviewed for conformance with American National Standard Decimal Inch, ANSI B87.1-1965.

The current revision was approved by the American National Standards Institute on December 27, 1996.

Copyright ASME International
Provided by IHS under license with ASME
No reproduction or networking permitted without license from IHS
Not for Resale

ASME STANDARDS COMMITTEE B94
Cutting Tools, Holders, Drivers, and Bushings

(The following is the roster of the Committee at the time of approval of this Standard.)

OFFICERS

C. W. Preuss, *Chair*
G. L. Fechter, *Secretary*

COMMITTEE PERSONNEL

P. Bourg, Tivoly, Inc.
A. M. Bratkovich, The Association for Manufacturing Technology
E. J. Czopor, E & S Sales, Inc.
D. Fischer, The Wapakoneta Machine Co.
W. E. Gill, Keen Agers, Inc.
D. J. Lionette, Porter Precision Products
M. E. Merchant, Institute of Advanced Manufacturing Science
V. J. Peterson, Kennametal
C. M. Stockinger, U.S. Cutting Tool Institute
J. Wherry, Cemented Carbide Products Association

TECHNICAL COMMITTEE 8 — JIG BUSHINGS

J. Evans, *Chair,* Acme Industrial Co.
D. L. Bethke, United California Corp.
C. C. DeLonghi, C. C. D. Consulting Corp.
K. M. Konet, Economy Bushing Co.
R. Okolischan, Carr Lane Manufacturing Co.
N. O. Shaw, All American P
A. R. Steele, American Drill Bushing Co.
R. Yillik, Yillik Precision Industries

Copyright ASME International
Provided by IHS under license with ASME
No reproduction or networking permitted without license from IHS
Not for Resale

CONTENTS

Foreword iii
Committee Roster v

1 Scope 1

2 Purpose 1

3 General 1
3.1 Press Fit Bushings 1
3.2 Renewable Bushings 1
3.3 Liner Bushings 1
3.4 Bushing Specifications 1
3.5 Jig Plate Thickness 1

4 Jig Bushing Designation System 1
4.1 Inside Diameter 1
4.2 Bushing Type 1
4.3 Body Diameter 2
4.4 Body Length 2
4.5 Example 2
4.6 Formula 2

5 Designation System for Lock Screws and Clamps 2
5.1 Lock Screws 2
5.2 Round Clamps 2

Figures
1 Press Fit Bushings 2
2 Plain-Type and Head-Type Liner Bushings 2

Tables
1 Head-Type Press Fit Bushings (Type H) 3
2 Plain-Type Press Fit Bushings (Type P) 5
Specifications for Head-Type and Plain-Type Press Fit Bushings (Tables 1 & 2) 7
Minimum Drill Bearing Length (Tables 1 & 2) 7
Specifications for Slip-Fixed-Type Renewable Bushings (Table 3) 7
3 Slip-Fixed-Type Renewable Bushings (Type SF) 9
Minimum Drill Bearing Length (Table 3) 10
4 Plain-Type Liner Bushings (Type L) 11
5 Head-Type Liner Bushings (Type HL) 13
6 Lock Screw for Use With Slip-Fixed Renewable Bushings 15
7 Round Clamp for Optional Use With Fixed Side of Slip-Fixed Renewable Bushings Only 16
8 Locking Mechanism Dimensions for Slip-Fixed Renewable Bushings 17
9 Decimal Equivalents of Fractional, Wire, and Letter Sizes 18

Copyright ASME International
Provided by IHS under license with ASME
No reproduction or networking permitted without license from IHS
Not for Resale

JIG BUSHINGS

1 SCOPE

This Standard covers the American National Standard practice for sizes, types, tolerances, and identification of jig bushings and locking devices used for securing the bushings in the jig or bushing plate.

2 PURPOSE

The purpose of this Standard is to provide the necessary information for the design, procurement, and installation of jig bushings.

3 GENERAL

3.1 Press Fit Bushings

Press fit bushings to guide the tool are installed directly in the jig without the use of a liner, and are employed principally where the bushings are used for short production runs and will not require replacement. They also are intended for use where the closeness of the center distance of holes will not permit the installation of liners and renewable bushings. Press fit bushings are made in two types: with heads and without.

3.2 Renewable Bushings

Renewable bushings to guide the tool are for use in liners, which in turn are installed in the jig. They are used where the bushings will wear out or become obsolete before the jig or where several bushings are to be interchangeable in one hole. They are usually made with a knurled head to facilitate removal.

There are "fixed" and "slip" milled notches combined on the head of renewable bushings. There is one type of renewable bushing: slip-fixed renewable.

(a) The fixed side of the renewable bushing is used with the intention of leaving it in place until worn out.

(b) The slip side of the renewable bushing is used with the intention of changing it frequently in a given size of liner. This side is most often used where two or more operations requiring different inside diameters are performed in a single jig, such as where drilling is followed by reaming, tapping, spot facing, counterboring, or some other secondary operation.

3.3 Liner Bushings

Liner bushings are provided with and without heads, and are permanently installed in a jig to receive the renewable bushings. They are sometimes called "master bushings."

3.4 Bushing Specifications

The dimensions and tolerances of jig bushings shall conform to the specifications given in the tables and notes on the following pages.

3.5 Jig Plate Thickness

The standard lengths of the press fit portion of jig bushings as established are based on standardized uniform jig plate thickness.

4 JIG BUSHING DESIGNATION SYSTEM

4.1 Inside Diameter

Specify jig bushing by inside diameter of hole size, in a decimal dimension.

4.2 Bushing Type

Specify bushing type by using letter abbreviation as follows:

(a) SF: Renewable, Slip-Fixed
(b) L: Liner, Plain
(c) HL: Liner, Headed
(d) P: Press Fit, Plain
(e) H: Press Fit, Headed

Carbide bushings should use the letter "C" after the type designation (e.g., a slip-fixed renewable carbide bushing would be designated SFC).

Copyright ASME International
Provided by IHS under license with ASME
No reproduction or networking permitted without license from IHS
Not for Resale

4.3 Body Diameter

Specify body diameter in multiples of $^{1}/_{64}$ in.

4.4 Body Length

Specify the effective or body length in multiples of $^{1}/_{16}$ in.

4.5 Example

For a jig bushing designated 0.5000 and SF-48-16:

(a) inside diameter hole size
  (1) decimal
(b) bushing type
  (1) SF: Renewable, Slip-Fixed
  (2) L: Liner, Plain
  (3) HL: Liner, Headed
  (4) P: Press Fit, Plain
  (5) H: Press Fit, Headed
(c) body diameter = 48 in.
(d) body length = 16 in.

4.6 Formula

A simple formula to remember is that all diameters are in multiples of $^{1}/_{64}$ and all lengths are in multiples of $^{1}/_{16}$.

5 DESIGNATION SYSTEM FOR LOCK SCREWS AND CLAMPS

5.1 Lock Screws

(a) LS-0: lock screw $^{3}/_{32}$ in. locking thickness × 0.438 in. overall length.

(b) LS-1: lock screw $^{1}/_{8}$ in. locking thickness × 0.625 in. overall length.

(c) LS-2: lock screw $^{3}/_{16}$ in. locking thickness × 0.875 in. overall length.

(d) LS-3: lock screw $^{3}/_{16}$ in. locking thickness × 1.000 in. overall length.

5.2 Round Clamps

(a) RC-1: round clamp $^{1}/_{8}$ in. locking thickness × 0.312 in. overall length.

(b) RC-2: round clamp $^{3}/_{16}$ in. locking thickness × 0.438 in. overall length.

(c) RC-3: round clamp $^{3}/_{16}$ in. locking thickness × 0.500 in. overall length.

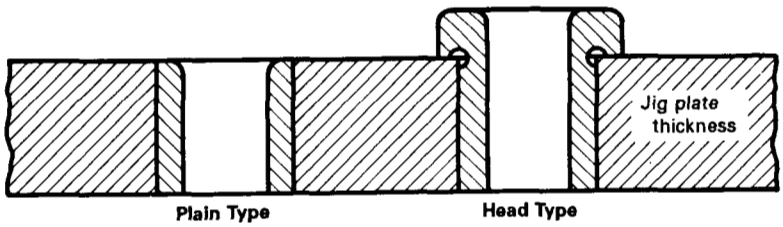

FIG. 1 PRESS FIT BUSHINGS

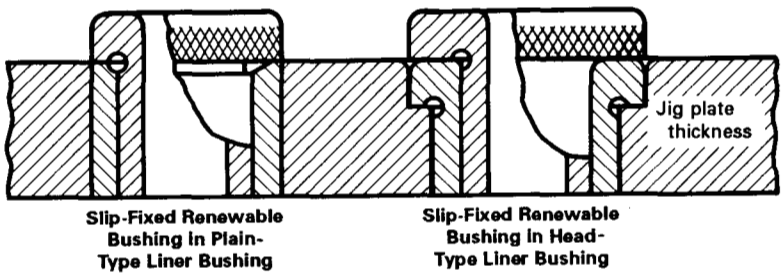

FIG. 2 PLAIN-TYPE AND HEAD-TYPE LINER BUSHINGS

Copyright ASME International
Provided by IHS under license with ASME
No reproduction or networking permitted without license from IHS
Not for Resale

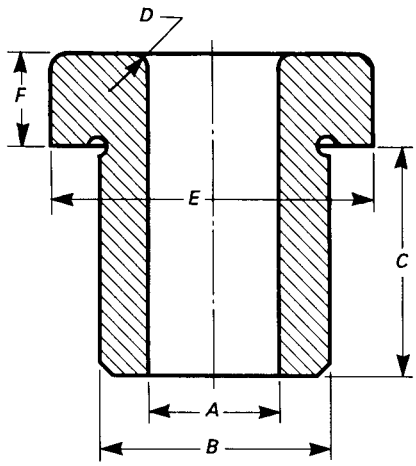

TABLE 1 HEAD-TYPE PRESS FIT BUSHINGS (TYPE H)

Range of Hole Diameters *A*	Body Diameter *B*			Body Length ±1/64 *C*	Radius Min. *D*	Head Diameter ±1/64 *E*	Head Thickness ±1/64 *F*	Number
		Finished						
	Nominal	Max.	Min.					
#80 to 1/16	5/32	0.1578	0.1575	1/4 5/16 3/8 1/2	1/64	1/4	3/32	H-10-4 H-10-5 H-10-6 H-10-8
1/16 to #39	13/64	0.2046	0.2043	1/4 5/16 3/8 1/2	1/64	19/64	3/32	H-13-4 H-13-5 H-13-6 H-13-8
#40 to 9/64	1/4	0.2516	0.2513	1/4 5/16 3/8 1/2 3/4	1/64	23/64	3/32	H-16-4 H-16-5 H-16-6 H-16-8 H-16-12
1/8 to #10	5/16	0.3141	0.3138	1/4 5/16 3/8 1/2 3/4 1	1/32	27/64	1/8	H-20-4 H-20-5 H-20-6 H-20-8 H-20-12 H-20-16
3/16 to "F"	13/32	0.4078	0.4075	1/4 5/16 3/8 1/2 3/4 1 1 3/8	1/32	1/2	5/32	H-26-4 H-26-5 H-26-6 H-26-8 H-26-12 H-26-16 H-26-22
3/16 to "O"	1/2	0.5017	0.5014	3/8 1/2 3/4 1 1 3/8 1 3/4	3/64	39/64	7/32	H-32-6 H-32-8 H-32-12 H-32-16 H-32-22 H-32-28

(continued)

Copyright ASME International
Provided by IHS under license with ASME
No reproduction or networking permitted without license from IHS
Not for Resale

TABLE 1 HEAD-TYPE PRESS FIT BUSHINGS (TYPE H) (CONT'D)

Range of Hole Diameters *A*	Body Diameter *B*			Body Length ±1/64 *C*	Radius Min. *D*	Head Diameter ±1/64 *E*	Head Thickness ±1/64 *F*	Number
	Nominal	Finished Max.	Finished Min.					
5/16 to 7/16	5/8	0.6267	0.6264	3/8 1/2 3/4 1 1 3/8 1 3/4 2 1/8	3/64	51/64	7/32	H-40-6 H-40-8 H-40-12 H-40-16 H-40-22 H-40-28 H-40-34
3/8 to 17/32	3/4	0.7518	0.7515	1/2 3/4 1 1 3/8 1 3/4 2 1/8	1/16	59/64	7/32	H-48-8 H-48-12 H-48-16 H-48-22 H-48-28 H-48-34
1/2 to 5/8	7/8	0.8768	0.8765	1/2 3/4 1 1 3/8 1 3/4 2 1/8	1/16	1 7/64	1/4	H-56-8 H-56-12 H-56-16 H-56-22 H-56-28 H-56-34
5/8 to 3/4	1	1.0018	1.0015	1/2 3/4 1 1 3/8 1 3/4 2 1/8 2 1/2	3/32	1 15/64	5/16	H-64-8 H-64-12 H-64-16 H-64-22 H-64-28 H-64-34 H-64-40
3/4 to 1	1 3/8	1.3772	1.3768	3/4 1 1 3/8 1 3/4 2 1/8 2 1/2	3/32	1 39/64	3/8	H-88-12 H-88-16 H-88-22 H-88-28 H-88-34 H-88-40
1 to 1 3/8	1 3/4	1.7523	1.7519	1 1 3/8 1 3/4 2 1/8 2 1/2 3	3/32	1 63/64	3/8	H-112-16 H-112-22 H-112-28 H-112-34 H-112-40 H-112-48
1 3/8 to 1 3/4	2 1/4	2.2525	2.2521	1 1 3/8 1 3/4 2 1/8 2 1/2 3	3/32	2 31/64	3/8	H-144-16 H-144-22 H-144-28 H-144-34 H-144-40 H-144-48

GENERAL NOTES:
(a) All dimensions are given in inches.
(b) See page 7 for additional information.

Copyright ASME International
Provided by IHS under license with ASME
No reproduction or networking permitted without license from IHS
Not for Resale

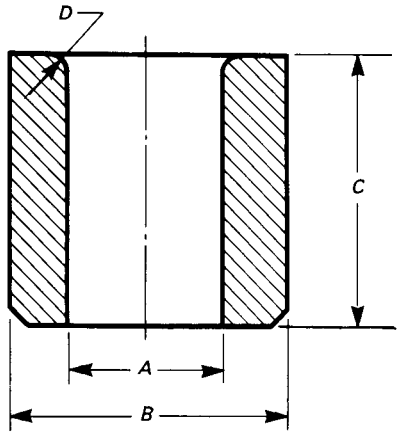

TABLE 2 PLAIN-TYPE PRESS FIT BUSHINGS (TYPE P)

Range of Hole Diameters *A*	Body Diameter *B*			Body Length ±1/64 *C*	Radius Min. *D*	Number
	Nominal	Finished Max.	Finished Min.			
#80 to 1/16	5/32	0.1578	0.1575	1/4	1/64	P-10-4
				5/16		P-10-5
				3/8		P-10-6
				1/2		P-10-8
1/16 to #39	13/64	0.2046	0.2043	1/4	1/64	P-13-4
				5/16		P-13-5
				3/8		P-13-6
				1/2		P-13-8
#40 to 9/64	1/4	0.2516	0.2513	1/4	1/64	P-16-4
				5/16		P-16-5
				3/8		P-16-6
				1/2		P-16-8
				3/4		P-16-12
1/8 to #10	5/16	0.3141	0.3138	1/4	1/32	P-20-4
				5/16		P-20-5
				3/8		P-20-6
				1/2		P-20-8
				3/4		P-20-12
				1		P-20-16
3/16 to "F"	13/32	0.4078	0.4075	1/4	1/32	P-26-4
				5/16		P-26-5
				3/8		P-26-6
				1/2		P-26-8
				3/4		P-26-12
				1		P-26-16
				1 3/8		P-26-22
3/16 to "O"	1/2	0.5017	0.5014	3/8	3/64	P-32-6
				1/2		P-32-8
				3/4		P-32-12
				1		P-32-16
				1 3/8		P-32-22
				1 3/4		P-32-28

(continued)

Copyright ASME International
Provided by IHS under license with ASME
No reproduction or networking permitted without license from IHS
Not for Resale

TABLE 2 PLAIN-TYPE PRESS FIT BUSHINGS (TYPE P) (CONT'D)

Range of Hole Diameters *A*	Body Diameter *B*			Body Length ±1/64 *C*	Radius Min. *D*	Number
		Finished				
	Nominal	Max.	Min.			
5/16 to 7/16	5/8	0.6267	0.6264	3/8	3/64	P-40-6
				1/2		P-40-8
				3/4		P-40-12
				1		P-40-16
				1 3/8		P-40-22
				1 3/4		P-40-28
				2 1/8		P-40-34
3/8 to 17/32	3/4	0.7518	0.7515	1/2	1/16	P-48-8
				3/4		P-48-12
				1		P-48-16
				1 3/8		P-48-22
				1 3/4		P-48-28
				2 1/8		P-48-34
1/2 to 5/8	7/8	0.8768	0.8765	1/2	1/16	P-56-8
				3/4		P-56-12
				1		P-56-16
				1 3/8		P-56-22
				1 3/4		P-56-28
				2 1/8		P-56-34
5/8 to 3/4	1	1.0018	1.0015	1/2	3/32	P-64-8
				3/4		P-64-12
				1		P-64-16
				1 3/8		P-64-22
				1 3/4		P-64-28
				2 1/8		P-64-34
				2 1/2		P-64-40
3/4 to 1	1 3/8	1.3772	1.3768	3/4	3/32	P-88-12
				1		P-88-16
				1 3/8		P-88-22
				1 3/4		P-88-28
				2 1/8		P-88-34
				2 1/2		P-88-40
1 to 1 3/8	1 3/4	1.7523	1.7519	1	3/32	P-112-16
				1 3/8		P-112-22
				1 3/4		P-112-28
				2 1/8		P-112-34
				2 1/2		P-112-40
				3		P-112-48
1 3/8 to 1 3/4	2 1/4	2.2525	2.2521	1	3/32	P-144-16
				1 3/8		P-144-22
				1 3/4		P-144-28
				2 1/8		P-144-34
				2 1/2		P-144-40
				3		P-144-48

GENERAL NOTES:
(a) All dimensions are given in inches.
(b) See page 7 for additional information.

Copyright ASME International
Provided by IHS under license with ASME
No reproduction or networking permitted without license from IHS
Not for Resale

SPECIFICATIONS FOR HEAD-TYPE AND PLAIN-TYPE PRESS FIT BUSHINGS (Tables 1 and 2)

(a) Tolerances on dimensions where not otherwise specified shall be ±1/64 inch.

(b) Hole sizes are in accordance with the American Standard Twist Drill Sizes, ASME B94.11M-1993.

(c) The maximum and minimum values of hole size *A* shall be as follows:

Nominal Size of Hole	Max., in.	Min., in.
Above #80 to 1/4 in. incl.	Nominal +0.0004	Nominal +0.0001
Above 1/4 to 3/4 in. incl.	Nominal +0.0005	Nominal +0.0001
Above 3/4 to 1 1/2 in. incl.	Nominal +0.0006	Nominal +0.0002
Above 1 1/2 in.	Nominal +0.0007	Nominal +0.0003

(d) Size and type of chamfer on lead end to be manufacturer's option.

(e) The length *C* is the overall length for the plain type and length underhead for the head type.

(f) The head design and construction shall be in accordance with the manufacturer's option.

(g) Diameter *A* must be concentric to diameter *B* within 0.0005 T.I.R. on finished ground bushings.

(h) Finish on ground diameter *A* shall be a 16 micro finish or better.

(i) Hardness shall be 61–65 Rc.

(j) Material shall be the manufacturer's option.

(k) Bushings in the size range from #80 through 5/16 may be counterbored at the manufacturer's option.

(l) The size of the counterbore shall be the inside diameter of the bushing plus 1/32 inch.

(m) The included angle at the bottom of the counterbore shall be 118 deg. included angle.

(n) The depth of the counterbore shall be in accordance with the chart below to provide adequate drill bearing.

SPECIFICATIONS FOR SLIP-FIXED-TYPE RENEWABLE BUSHINGS (Table 3)

(a) Tolerances on dimensions where not otherwise specified shall be ±1/64 inch.

(b) Hole sizes are in accordance with the American Standard Twist Drill Sizes, ASME B94.11M-1993.

(c) The maximum and minimum values of hole size *A* shall be as follows:

Nominal Size of Hole	Max., in.	Min., in.
Above #80 to 1/4 in. incl.	Nominal +0.0004	Nominal +0.0001
Above 1/4 to 3/4 in. incl.	Nominal +0.0005	Nominal +0.0001
Above 3/4 to 1 1/2 in. incl.	Nominal +0.0006	Nominal +0.0002
Above 1 1/2 in.	Nominal +0.0007	Nominal +0.0003

(d) Size and type of chamfer on lead end to be manufacturer's option.

(e) When slip-fixed renewable bushings are used with

MINIMUM DRILL BEARING LENGTH
Bushing Size and Type

Body Length	#80 to 1/16		#52 to #39		#38 to #28		9/64 to 3/16		#12 to 1/4		F to 5/16	
	P	*H*	*P*	*H*	*P*	*H*	*P*	*H*	*P*	*H*	*P*	*H*
1/4	X	1/4	X	X	X	X	X	X	X	X	X	X
5/16	X	1/4	X	X	X	X	X	X	X	X	X	X
3/8	1/4	1/4	X	X	X	X	X	X	X	X	X	X
1/2	1/4	1/4	X	5/16	X	5/16	X	3/8	X	X	X	X
3/4	+	+	+	+	3/8	3/8	X	3/8	X	X	X	X
1	+	+	+	+	+	+	5/8	5/8	5/8	5/8	5/8	5/8
1 3/8	+	+	+	+	+	+	5/8	5/8	5/8	5/8	5/8	5/8
1 3/4	+	+	+	+	+	+	5/8	5/8	5/8	5/8	5/8	5/8

GENERAL NOTES:
(a) "X" indicates no counterbore.
(b) "+" indicates not American National Standard length.
(c) All dimensions are given in inches.

Copyright ASME International
Provided by IHS under license with ASME
No reproduction or networking permitted without license from IHS
Not for Resale

liner bushings of the head type, the length under the head will still be equal to the thickness of the jig plate, because the head of the liner bushing will be countersunk into the jig plate.

(f) The head design and construction shall be in accordance with the manufacturer's option and is usually knurled.

(g) Diameter *A* must be concentric to Diameter *B* within 0.0005 T.I.R. on finished ground bushings.

(h) Finish on ground diameter *A* shall be a 16 micro finish or better.

(i) Hardness shall be 61–65 Rc.

(j) Material shall be the manufacturer's option.

(k) Bushings in the size range from #80 through $^{5}/_{16}$ may be counterbored at the manufacturer's option.

(l) The size of the counterbore shall be the inside diameter of the bushing plus $^{1}/_{32}$ inch.

(m) The included angle at the bottom of the counterbore shall be 118 deg. included angle.

(n) The depth of the counterbore shall be in accordance with the chart below Table 3 (on page 10) to provide adequate drill bearing.

Copyright ASME International
Provided by IHS under license with ASME
No reproduction or networking permitted without license from IHS
Not for Resale

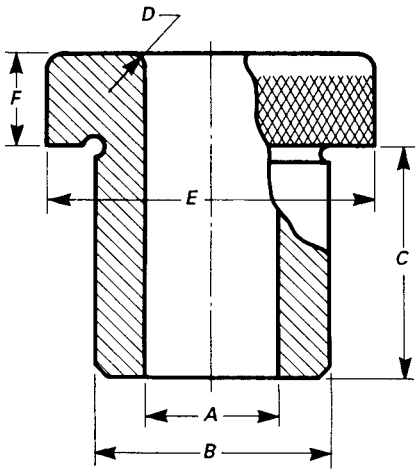

TABLE 3 SLIP-FIXED-TYPE RENEWABLE BUSHINGS (TYPE SF)

Range of Hole Diameters *A*	Body Diameter *B*			Body Length ±1/64 *C*	Radius Min. *D*	Head Diameter ±1/64 *E*	Head Thickness ±1/64 *F*	Number
	Nominal	Max.	Min.					
#80 to 1/16	3/16	0.1875	0.1873	1/4 5/16 3/8 1/2	1/32	5/16	3/16	SF-12-4 SF-12-5 SF-12-6 SF-12-8
1/16 to #10	5/16	0.3125	0.3123	5/16 3/8 1/2 3/4 1	3/64	35/64	1/4	SF-20-5 SF-20-6 SF-20-8 SF-20-12 SF-20-16
5/32 to 11/32	1/2	0.5000	0.4998	5/16 3/8 1/2 3/4 1 1 3/8 1 3/4	3/64	51/64	1/4	SF-32-5 SF-32-6 SF-32-8 SF-32-12 SF-32-16 SF-32-22 SF-32-28
5/16 to 9/16	3/4	0.7500	0.7498	1/2 3/4 1 1 3/8 1 3/4 2 1/8 2 1/2	3/32	1 3/64	1/4	SF-48-8 SF-48-12 SF-48-16 SF-48-22 SF-48-28 SF-48-34 SF-48-40
1/2 to 3/4	1	1.0000	0.9998	1/2 3/4 1 1 3/8 1 3/4 2 1/8 2 1/2	3/32	1 27/64	3/8	SF-64-8 SF-64-12 SF-64-16 SF-64-22 SF-64-28 SF-64-34 SF-64-40

(continued)

Copyright ASME International
Provided by IHS under license with ASME
No reproduction or networking permitted without license from IHS
Not for Resale

TABLE 3 SLIP-FIXED-TYPE RENEWABLE BUSHINGS (TYPE SF) (CONT'D)

Range of Hole Diameters *A*	Body Diameter *B*			Body Length ±1/64 *C*	Radius Min. *D*	Head Diameter ±1/64 *E*	Head Thickness ±1/64 *F*	Number
	Nominal	Max.	Min.					
3/4	1 3/8	1.3750	1.3747	3/4	3/32	1 51/64	3/8	SF-88-12
to				1				SF-88-16
1 1/16				1 3/8				SF-88-22
				1 3/4				SF-88-28
				2 1/8				SF-88-34
				2 1/2				SF-88-40
				3				SF-88-48
1	1 3/4	1.7500	1.7497	1	1/8	2 19/64	3/8	SF-112-16
to				1 3/8				SF-112-22
1 3/8				1 3/4				SF-112-28
				2 1/8				SF-112-34
				2 1/2				SF-112-40
				3				SF-112-48
1 3/8	2 1/4	2.2500	2.2496	1	1/8	2 51/64	3/8	SF-144-16
to				1 3/8				SF-144-22
1 3/4				1 3/4				SF-144-28
				2 1/8				SF-144-34
				2 1/2				SF-144-40
				3				SF-144-48

GENERAL NOTES:
(a) All dimensions are given in inches.
(b) *See pages 7 and 8 for additional information.*

MINIMUM DRILL BEARING LENGTH
Bushing Size

Body Length	#80 to 1/16	#52 to #39	#38 to #28	9/64 to 3/16	#12 to 1/4	*F* to 5/16
1/4	1/4	+	+	+	+	+
5/16	1/4	3/8	3/8	3/8	3/8	X
3/8	1/4	3/8	3/8	3/8	3/8	X
1/2	1/4	3/8	3/8	3/8	3/8	X
3/4	+	3/8	3/8	3/8	5/8	5/8
1	+	3/8	3/8	5/8	5/8	5/8
1 3/8	+	+	+	5/8	5/8	5/8
1 3/4	+	+	+	5/8	5/8	5/8

GENERAL NOTES:
(a) "X" indicates no counterbore.
(b) "+" indicates not American National Standard length.
(c) All dimensions are given in inches.

Copyright ASME International
Provided by IHS under license with ASME
No reproduction or networking permitted without license from IHS
Not for Resale

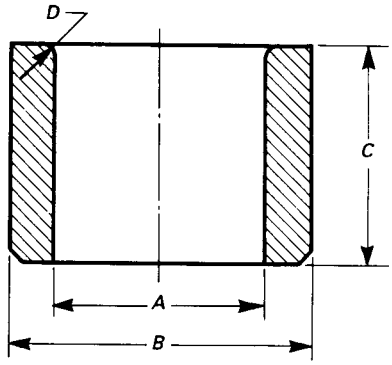

TABLE 4 PLAIN-TYPE LINER BUSHINGS (TYPE L)

Range of Hole Sizes in Renewable Bushings	Inside Diameter *A* [Note (1)]			Body Diameter *B*			Body Length $\pm 1/64$ *C*	Radius Min. *D*	Number
					Finished				
	Nominal	Max.	Min.	Nominal	Max.	Min.			
#80 to 1/16	3/16	0.1879	0.1876	5/16	0.3141	0.3138	1/4	1/32	L-20-4
							5/16		L-20-5
							3/8		L-20-6
							1/2		L-20-8
1/16 to #10	5/16	0.3129	0.3126	1/2	0.5017	0.5014	5/16	3/64	L-32-5
							3/8		L-32-6
							1/2		L-32-8
							3/4		L-32-12
							1		L-32-16
5/32 to 11/32	1/2	0.5005	0.5002	3/4	0.7518	0.7515	5/16	1/16	L-48-5
							3/8		L-48-6
							1/2		L-48-8
							3/4		L-48-12
							1		L-48-16
							1 3/8		L-48-22
							1 3/4		L-48-28
5/16 to 9/16	3/4	0.7506	0.7503	1	1.0018	1.0015	1/2	1/16	L-64-8
							3/4		L-64-12
							1		L-64-16
							1 3/8		L-64-22
							1 3/4		L-64-28
							2 1/8		L-64-34
							2 1/2		L-64-40
1/2 to 3/4	1	1.0007	1.0004	1 3/8	1.3772	1.3768	1/2	3/32	L-88-8
							3/4		L-88-12
							1		L-88-16
							1 3/8		L-88-22
							1 3/4		L-88-28
							2 1/8		L-88-34
							2 1/2		L-88-40

(continued)

Copyright ASME International
Provided by IHS under license with ASME
No reproduction or networking permitted without license from IHS
Not for Resale

TABLE 4 PLAIN-TYPE LINER BUSHINGS (TYPE L) (CONT'D)

Range of Hole Sizes in Renewable Bushings	Inside Diameter *A* [Note (1)]			Body Diameter *B*			Body Length $\pm 1/64$ *C*	Radius Min. *D*	Number
					Finished				
	Nominal	Max.	Min.	Nominal	Max.	Min.			
3/4 to 1 1/16	1 3/8	1.3760	1.3756	1 3/4	1.7523	1.7519	3/4	3/32	L-112-12
							1		L-112-16
							1 3/8		L-112-22
							1 3/4		L-112-28
							2 1/8		L-112-34
							2 1/2		L-112-40
							3		L-112-48
1 to 1 3/8	1 3/4	1.7512	1.7508	2 1/4	2.2525	2.2521	1	3/32	L-144-16
							1 3/8		L-144-22
							1 3/4		L-144-28
							2 1/8		L-144-34
							2 1/2		L-144-40
							3		L-144-48
1 3/8 to 1 3/4	2 1/4	2.2515	2.2510	2 3/4	2.7526	2.7522	1	1/8	L-176-16
							1 3/8		L-176-22
							1 3/4		L-176-28
							2 1/8		L-176-34
							2 1/2		L-176-40
							3		L-176-48

GENERAL NOTES:

(a) Tolerances on dimensions where not otherwise specified shall be $\pm 1/64$ inch.

(b) For detail dimensions of renewable bushings, see Table 3.

(c) All dimensions are given in inches.

NOTE:

(1) Diameter *A* must be concentric to diameter *B* within 0.0005 T.I.R. on finish ground bushings.

Copyright ASME International
Provided by IHS under license with ASME
No reproduction or networking permitted without license from IHS
Not for Resale

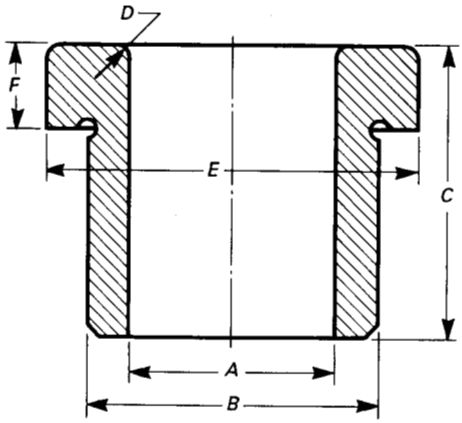

TABLE 5 HEAD-TYPE LINER BUSHINGS (TYPE HL)

Range of Hole Sizes in Renewable Bushings	Inside Diameter *A* [Note (1)]			Body Diameter *B*			Body Length ±1/64 *C*	Radius Min. *D*	Head Diameter ±1/64 *E*	Head Thickness ±1/64 *F*	Number
					Finished						
	Nominal	Max.	Min.	Nominal	Max.	Min.					
1/16 to #10	5/16	0.3129	0.3126	1/2	0.5017	0.5014	5/16	3/64	5/8	3/32	HL-32-5
							3/8				HL-32-6
							1/2				HL-32-8
							3/4				HL-32-12
							1				HL-32-16
5/32 to 11/32	1/2	0.5005	0.5002	3/4	0.7518	0.7515	5/16	1/16	7/8	3/32	HL-48-5
							3/8				HL-48-6
							1/2				HL-48-8
							3/4				HL-48-12
							1				HL-48-16
							1 3/8				HL-48-22
							1 3/4				HL-48-28
5/16 to 9/16	3/4	0.7506	0.7503	1	1.0018	1.0015	1/2	1/16	1 1/8	1/8	HL-64-8
							3/4				HL-64-12
							1				HL-64-16
							1 3/8				HL-64-22
							1 3/4				HL-64-28
							2 1/8				HL-64-34
							2 1/2				HL-64-40
1/2 to 3/4	1	1.0007	1.0004	1 3/8	1.3772	1.3768	1/2	3/32	1 1/2	1/8	HL-88-8
							3/4				HL-88-12
							1				HL-88-16
							1 3/8				HL-88-22
							1 3/4				HL-88-28
							2 1/8				HL-88-34
							2 1/2				HL-88-40
3/4 to 1 1/16	1 3/8	1.3760	1.3756	1 3/4	1.7523	1.7519	3/4	3/32	1 7/8	3/16	HL-112-12
							1				HL-112-16
							1 3/8				HL-112-22
							1 3/4				HL-112-28
							2 1/8				HL-112-34
							2 1/2				HL-112-40
							3				HL-112-48

(continued)

Copyright ASME International
Provided by IHS under license with ASME
No reproduction or networking permitted without license from IHS
Not for Resale

TABLE 5 HEAD-TYPE LINER BUSHINGS (TYPE HL) (CONT'D)

Range of Hole Sizes in Renewable Bushings	Inside Diameter *A* [Note (1)]			Body Diameter *B*			Body Length $\pm 1/64$ *C*	Radius Min. *D*	Head Diameter $\pm 1/64$ *E*	Head Thickness $\pm 1/64$ *F*	Number
	Nominal	Max.	Min.	Nominal	Finished Max.	Finished Min.					
1 to 1 3/8	1 3/4	1.7512	1.7508	2 1/4	2.2525	2.2521	1	3/32	2 3/8	3/16	HL-144-16
							1 3/8				HL-144-22
							1 3/4				HL-144-28
							2 1/8				HL-144-34
							2 1/2				HL-144-40
							3				HL-144-48
1 3/8 to 1 3/4	2 1/4	2.2515	2.2510	2 3/4	2.7526	2.7522	1	1/8	2 7/8	3/16	HL-176-16
							1 3/8				HL-176-22
							1 3/4				HL-176-28
							2 1/8				HL-176-34
							2 1/2				HL-176-40
							3				HL-176-48

GENERAL NOTES:

(a) Tolerances on dimensions where not otherwise specified shall be $\pm 1/64$ inch.

(b) For detail dimensions of renewable bushings, see Table 3.

(c) The head design and construction shall be in accordance with manufacturer's standard.

(d) All dimensions are given in inches.

NOTE:

(1) Diameter *A* must be concentric to diameter *B* within 0.0005 T.I.R. on finish ground bushings.

Copyright ASME International
Provided by IHS under license with ASME
No reproduction or networking permitted without license from IHS Not for Resale

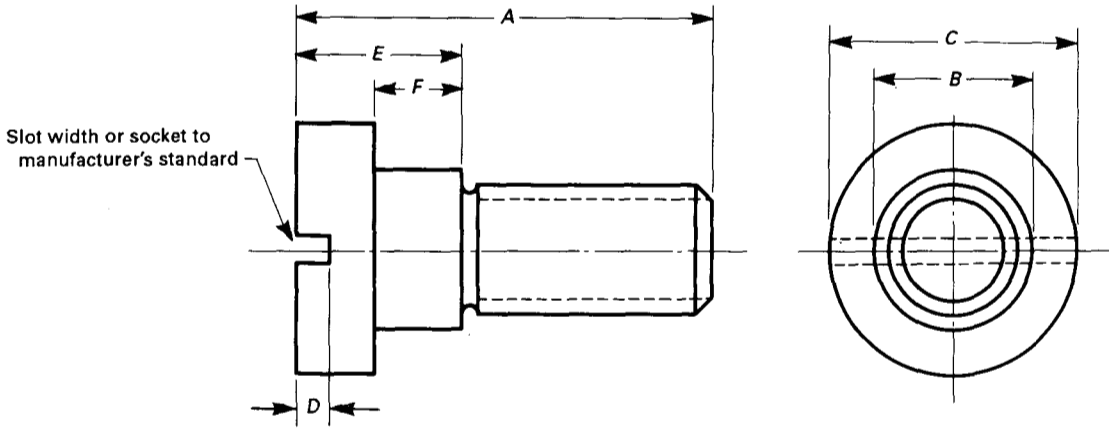

TABLE 6 LOCK SCREW FOR USE WITH SLIP-FIXED RENEWABLE BUSHINGS

Number	*A*	*B*	*C*	*D*	*E*	*F* [Note (1)]	UNC Thread
LS-0	7/16	3/16	5/16	Manufacturer's standard	3/16	0.105 0.100	8–32
LS-1	5/8	3/8	5/8	Manufacturer's standard	1/4	0.138 0.132	5/16–18
LS-2	7/8	3/8	5/8	Manufacturer's standard	3/8	0.200 0.194	5/16–18
LS-3	1	7/16	3/4	Manufacturer's standard	3/8	0.200 0.194	3/8–16

GENERAL NOTES:
(a) Tolerances on dimensions where not otherwise specified shall be ±1/64 inch.
(b) Material and hardness to manufacturer's standard.
(c) All dimensions are given in inches.

NOTE:
(1) Allows clearance to enable rotation of slip side of slip-fixed renewable bushings.

Copyright ASME International
Provided by IHS under license with ASME
No reproduction or networking permitted without license from IHS
Not for Resale

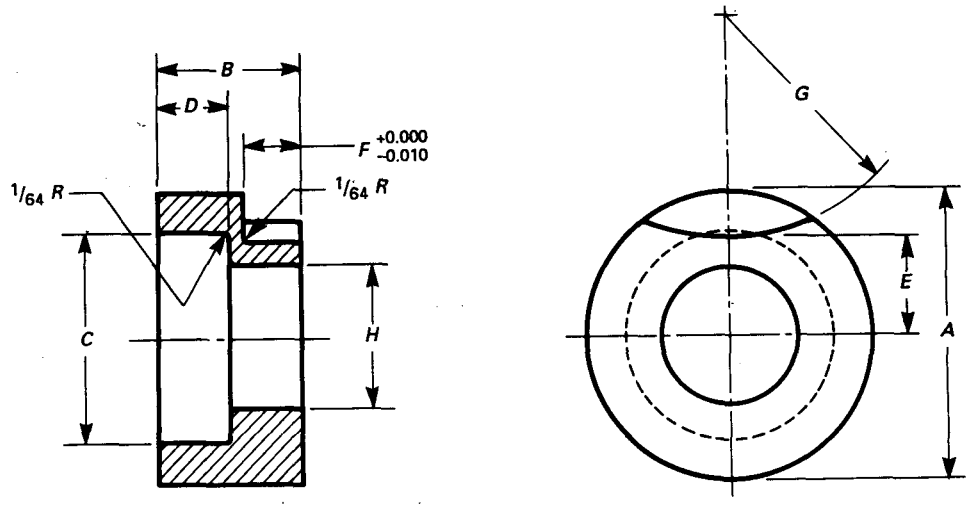

TABLE 7
ROUND CLAMP FOR OPTIONAL USE WITH FIXED SIDE OF SLIP-FIXED RENEWABLE BUSHINGS ONLY

Number	A	B	C	D	E	F [Note (1)]	G	H	Use With Socket Head Screw
RC-1	5/8	5/16	31/64	5/32	13/64	1/8	17/32	21/64	5/16–18
RC-2	5/8	7/16	31/64	7/32	3/16	3/16	29/32	21/64	5/16–18
RC-3	3/4	1/2	37/64	9/32	7/32	3/16	1 13/32	25/64	3/8–16

GENERAL NOTES:
(a) Tolerances on dimensions where not otherwise specified shall be ±1/64 inch.
(b) Material and hardness to manufacturer's standard.
(c) Round clamps with standard socket head screws are designed for use with the fixed side of the slip-fixed renewable bushing and are to be used where engineers prefer the clamp over a lock screw. These clamps are located from the same point as the lock screw (as shown as *R* in the standards); therefore, the same locating jigs can be used to drill plus tap the necessary holes in the jig or fixture. To change to the round clamp in old fixtures, remove the conventional screw and use the same tapped hole to secure the new clamp with standard socket head screw.
(d) All dimensions are given in inches.

NOTE:
(1) Allows for clamping.

Copyright ASME International
Provided by IHS under license with ASME
No reproduction or networking permitted without license from IHS
Not for Resale

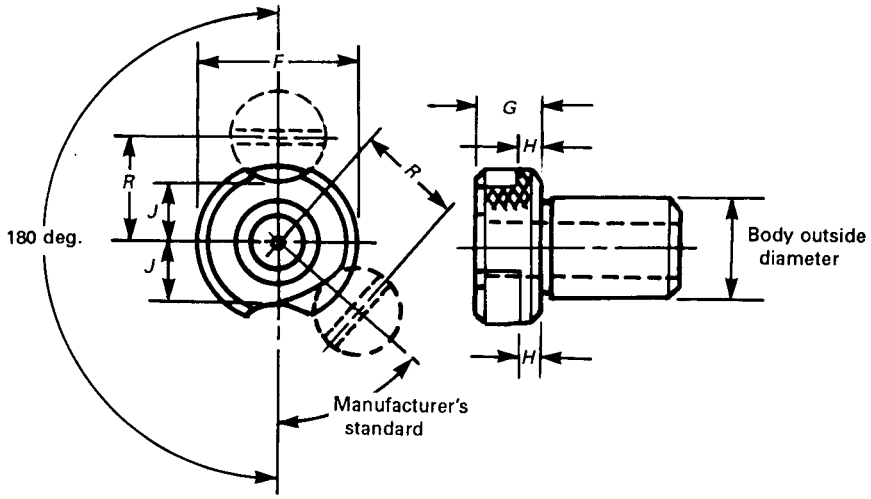

TABLE 8 LOCKING MECHANISM DIMENSIONS FOR SLIP-FIXED RENEWABLE BUSHINGS

Body Outside Diameter	Head Diameter *F*	Head Thickness *G*	±0.005 *H*	*J*	*R*	Locking Dimension of Lock Screw (See Table 6)	Locking Dimension of Clamp (See Table 7)	Max. Head Diameter of Liner to Clear Locking Device (See Table 5)	Clamp or Screw LS or RC
3/16	5/16	3/16	3/32	3/32	17/64	0.105 0.100	. . .	. . .	0
5/16	9/16	1/4	1/8	11/64	1/2	0.138 0.132	1/8	5/8	1
1/2	13/16	1/4	1/8	19/64	5/8	0.138 0.132	1/8	7/8	1
3/4	1 1/16	1/4	1/8	27/64	3/4	0.138 0.132	1/8	1 1/8	1
1	1 7/16	3/8	3/16	19/32	59/64	0.200 0.194	3/16	1 1/2	2
1 3/8	1 13/16	3/8	3/16	25/32	1 7/64	0.200 0.194	3/16	1 7/8	2
1 3/4	2 5/16	3/8	3/16	1	1 25/64	0.200 0.194	3/16	2 3/8	3
2 1/4	2 13/16	3/8	3/16	1 1/4	1 41/64	0.200 0.194	3/16	2 7/8	3

Copyright ASME International
Provided by IHS under license with ASME
No reproduction or networking permitted without license from IHS
Not for Resale

TABLE 9 DECIMAL EQUIVALENTS OF FRACTIONAL, WIRE, AND LETTER SIZES

Size	Decimal Equivalent	Size	Decimal Equivalent	Size	Decimal Equivalent	Size	Decimal Equivalent
80	.0135	42	.0935	13/64	.2031	13/32	.4062
79	.0145	3/32	.0938	6	.2040	Z	.4130
1/64	.0156	41	.0960	5	.2055	27/64	.4219
78	.0160	40	.0980	4	.2090	7/16	.4375
77	.0180	39	.0995	3	.2130	29/64	.4531
76	.0200	38	.1015	7/32	.2188	15/32	.4688
75	.0210	37	.1040	2	.2210	31/64	.4844
74	.0225	36	.1065	1	.2280	1/2	.5000
73	.0240	7/64	.1094	A	.2340	33/64	.5156
72	.0250	35	.1100	15/64	.2344	17/32	.5312
71	.0260	34	.1110	B	.2380	35/64	.5469
70	.0280	33	.1130	C	.2420	9/16	.5625
69	.0292	32	.1160	D	.2460	37/64	.5781
68	.0310	31	.1200	1/4	.2500	19/32	.5938
1/32	.0312	1/8	.1250	F	.2570	39/64	.6094
67	.0320	30	.1285	G	.2610	5/8	.6250
66	.0330	29	.1360	17/64	.2656	41/64	.6406
65	.0350	28	.1405	H	.2660	21/32	.6562
64	.0360	9/64	.1406	I	.2720	43/64	.6719
63	.0370	27	.1440	J	.2770	11/16	.6875
62	.0380	26	.1470	K	.2810	45/64	.7031
61	.0390	25	.1495	9/32	.2812	23/32	.7188
60	.0400	24	.1520	L	.2900	47/64	.7344
59	.0410	23	.1540	M	.2950	3/4	.7500
58	.0420	5/32	.1562	19/64	.2969	49/64	.7656
57	.0430	22	.1570	N	.3020	25/32	.7812
56	.0465	21	.1590	5/16	.3125	51/64	.7969
3/64	.0469	20	.1610	O	.3160	13/16	.8125
55	.0520	19	.1660	P	.3230	53/64	.8281
54	.0550	18	.1695	21/64	.3281	27/32	.8438
53	.0595	11/64	.1719	Q	.3320	55/64	.8594
1/16	.0625	17	.1730	R	.3390	7/8	.8750
52	.0635	16	.1770	11/32	.3438	57/64	.8906
51	.0670	15	.1800	S	.3480	29/32	.9062
50	.0700	14	.1820	T	.3580	59/64	.9219
49	.0730	13	.1850	23/64	.3594	15/16	.9375
48	.0760	3/16	.1875	U	.3680	61/64	.9531
5/64	.0781	12	.1890	3/8	.3750	31/32	.9688
47	.0785	11	.1910	V	.3770	63/64	.9844
46	.0810	10	.1935	W	.3860	1	1.0000
45	.0820	9	.1960	25/64	.3906		
44	.0860	8	.1990	X	.3970		
43	.0890	7	.2010	Y	.4040		

Copyright ASME International
Provided by IHS under license with ASME
No reproduction or networking permitted without license from IHS
Not for Resale

AMERICAN NATIONAL STANDARDS FOR CUTTING TOOLS

Reamers B94.2-1995
Straight Cut-Off Blades for Lathes and Screw Machines ..... B94.3-1965(R1995)
Knurling ..... B94.6-1984(R1995)
Hobs B94.7-1980 (R1995)
Inserted Blade Milling Cutter Bodies ..... B94.8-1967(R1987)
Taps — Cut and Ground Threads B94.9-1987
Twist Drills B94.11M-1993
Punches — Basic Head Type ..... B94.14-1968(R1995)
Punches — Basic Head Type (Metric) ..... B94.14.1-1977(R1995)
Retainers — Basic Ball-Lock, Punch and Die Button, Light and Heavy Duty ..... B94.16-1987(R1995)
Retainers — Basic Ball-Lock, Punch and Die Button, Light and Heavy Duty (Metric) ..... B94.16.1-1978(R1995)
Gages — Functional, Ball-Lock Punches, Die Buttons, and Retainers ..... B94.17-1987(R1995)
Gages — Functional, Ball-Lock Punches, Die Buttons, and Retainers (Metric) ..... B94.17.1-1977(R1995)
Punches — Basic Ball-Lock Light and Heavy Duty ..... B94.18-1987(R1995)
Punches — Basic Ball-Lock Light and Heavy Duty (Metric) ..... B94.18.1-1977(R1995)
Milling Cutters and End Mills B94.19-1985
Gear Shaper Cutters ..... B94.21-1968(R1995)
Punches — Variable, Head Type ..... B94.22-1968(R1995)
Punches — Variable, Head Type (Metric) ..... B94.22.1-1977(R1995)
Punch Guide Bushings — Variable, Press Fit ..... B94.23-1969(R1995)
Die Buttons — Basic Taper Relief, Press Fit ..... B94.27-1970(R1995)
Die Buttons — Basic Taper Relief, Press Fit (Metric) ..... B94.27.1M-1983(R1995)
Die Buttons — Basic Straight Relief, Press Fit ..... B94.28-1970(R1995)
Die Buttons — Basic Straight Relief, Press Fit (Metric) ..... B94.28.1M-1984(R1995)
Die Buttons — Basic Ball-Lock ..... B94.29-1970(R1995)
Die Buttons — Basic Ball-Lock (Metric) ..... B94.29.1-1977(R1995)
Die Buttons — Variable, Press Fit ..... B94.30-1970(R1995)
Steel Rotary Slitting Knives and Steel Spacing Collars ..... B94.31-1981(R1995)
Jig Bushings B94.33-1996
Drill Drivers, Split-Sleeve, Collet Type ..... B94.35-1972(R1995)
Roller Turner Type Cutting Tools, Single-Point ..... B94.37M-1979(R1985)
Punches — Variable, Angle Head Type and Related Quill Bushings ..... B94.38-1972(R1995)
Punches — Basic, Combination Angle Head Type and Related Quill Bushings ..... B94.39-1972(R1995)
Punches — Wire Type ..... B94.40-1972(R1995)
Punches — Basic, Angle Head Type and Related Quill Bushings ..... B94.41-1972(R1995)
Die Buttons — Variable, Press Fit, Headless and Head Type, Step Relief ..... B94.43-1972(R1995)
Punches — Basic, Cylindrical Head Type and Related Quill Bushings ..... B94.44-1972(R1995)
Spade Drill Blades and Spade Drill Holders ..... B94.49-1975(R1995)
Basic Nomenclature and Definitions for Single-Point Cutting Tools ..... B94.50-1975(R1995)
Specifications for Band Saw Blades (Metal Cutting) B94.51M-1994
Specifications for Hacksaw Blades B94.52M-1994
Solid Steel Rectangular Metal Cutting Squaring Shear Knives — Dimensional Tolerances ..... B94.53-1978(R1984)
Specifications for Hole Saws, Hole Saw Arbors, and Hole Saw Accessories B94.54-1994
Tool Life Testing with Single-Point Turning Tools ..... B94.55M-1985(R1995)
Gages — Functional, Ball-Lock Punches, Inch B94.56-1995
Gages — Functional, Ball-Lock Punches, Metric B94.56.1M-1995

The ASME Publications Catalog shows a complete list of all the Standards published by the Society. For a complimentary catalog, or the latest information about our publications, call 1-800-THE-ASME (1-800-843-2763).

Copyright ASME International
Provided by IHS under license with ASME
No reproduction or networking permitted without license from IHS
Not for Resale

ISBN 0-7918-2429-2

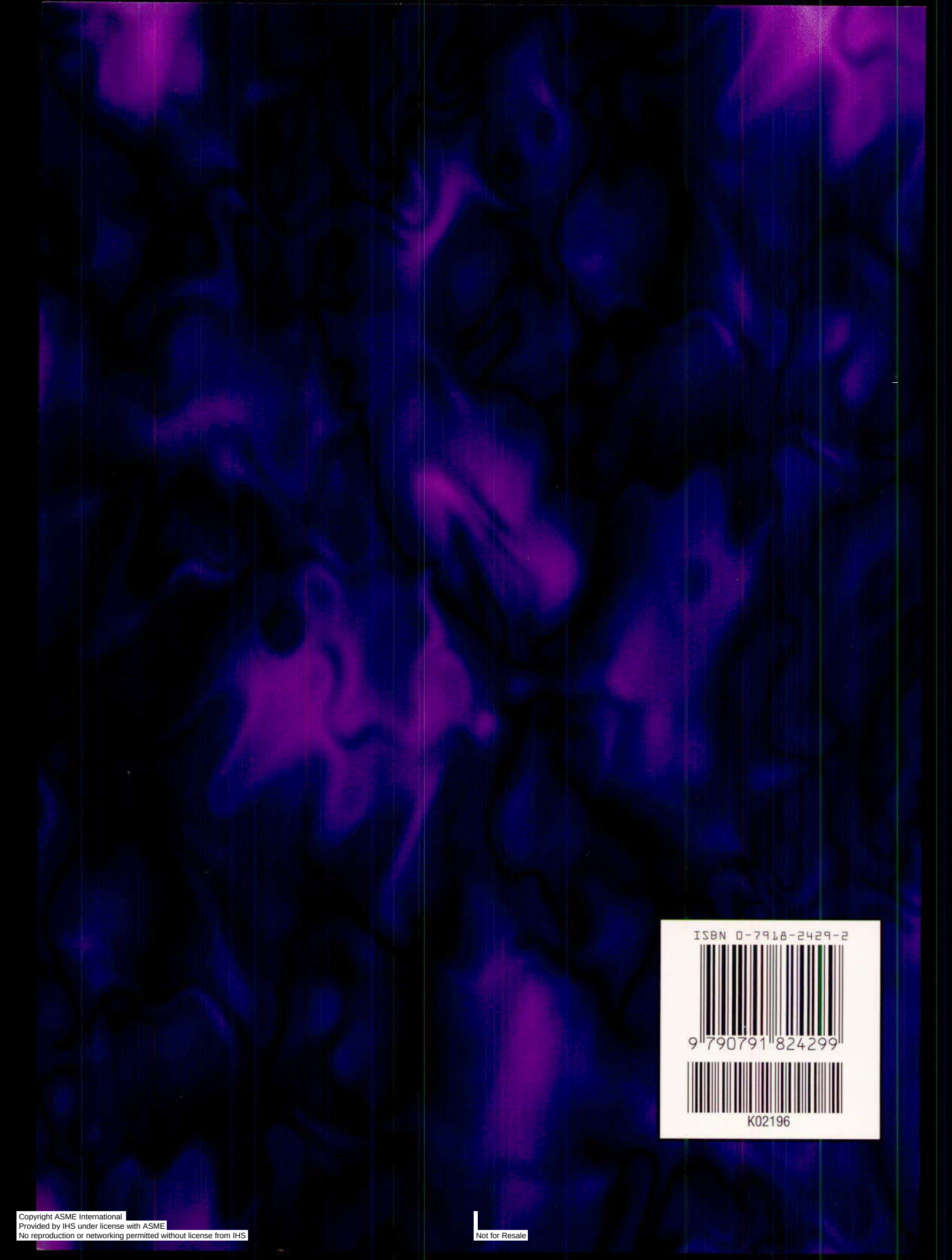

Copyright ASME International
Provided by IHS under license with ASME
No reproduction or networking permitted without license from IHS

Not for Resale