ASME B94.21 68 ■ 0759670 0048065 0 ■

M-25-19

U S A S T A N D A R D

GEAR SHAPER CUTTERS

USAS B94.21 - 1968

Sponsor

The American Society of Mechanical Engineers

Published by

THE AMERICAN SOCIETY OF MECHANICAL ENGINEERS

United Engineering Center 345 East 47th Street New York, N. Y. 10017

Copyright ASME International
Provided by IHS under license with ASME
No reproduction or networking permitted without license from IHS

Not for Resale

USA STANDARD

This USA Standard is one of nearly 3000 standards approved as American Standards by the American Standards Association. On August 24, 1966, the ASA was reconstituted as the United States of America Standards Institute. Standards approved as American Standards are now designated USA Standards. There is no change in their index indentification or technical content.

Any part of this standard may be quoted. Credit lines should read: "Extracted from USA Standard Gear Shaper Cutters (USAS B94.21-1968) with the permission of the publisher, The American Society of Mechanical Engineers, United Engineering Center, 345 East 47th Street, New York, New York 10017."

Copyright, © 1969 by
THE AMERICAN SOCIETY OF MECHANICAL ENGINEERS

Printed in U.S.A.

Copyright ASME International
Provided by IHS under license with ASME
No reproduction or networking permitted without license from IHS

Not for Resale

FOREWORD

In response to requests from both users and producers a project was initiated in December of 1961 to establish standards for gear cutting tools.

USA Standards Committee B5 approved this project at their annual meeting in 1961 and created technical committee TC-14 to prepare such standards.

In 1962 the USA Standards Committee B5 was divided and technical committees identified with the general area of "metal cutting" were transferred to a new USA Standards Committee B94.

The first meeting of TC-14, reporting to USA Standards Committee B94, was held in December 1962. It was at this time decided to divide the general subject into three areas; i.e., hobs, gear shaper cutters and shaving cutters. The initial activity was to prepare a proposal for a USA Standard on hobs, using the industry standards (MCTI) as the basis for consideration.

A proposal covering hobs was submitted to industry in September 1964 and on June 22, 1966, it was approved by the USA Standards Institute and designated B94.7-1966.

A proposal covering shaper cutters was submitted to industry in December 1966 for review and comments. All of the responses were considered in a meeting of TC-14 in November 1967 and they then approved a final proposal.

The B94 TC15 Editorial Committee reviewed the proposal and it was submitted in March 1968 to the USA Standards Committee B94 for letter ballot. Following approval by B94, the proposal was approved by the sponsor, ASME, on June 13, 1968. It was approved by the United States of America Standards Institute on August 5, 1968.

Copyright ASME International
Provided by IHS under license with ASME
No reproduction or networking permitted without license from IHS
Not for Resale

U.S. DEPARTMENT OF THE AIR FORCE
J. O. Snyder, Liaison, U.S. Department of the Air Force, Wright-Patterson, AFB, Ohio

U.S. DEPARTMENT OF THE ARMY
R. K. Freeman, Liaison, U.S. Department of the Army, Rock Island, Illinois
R. J. Buhman, Alternate, U.S. Department of the Army, Rock Island, Illinois

U.S. DEPARTMENT OF THE NAVY
J. N. Cornette, Liaison, U.S. Navy Department, Naval Ship Engineering Center, Washington, D.C.

U.S. MACHINE SCREW, TAPPING SCREW, WOOD SCREW AND CAP SCREW SERVICE BUREAU
H. F. Phipard, Continental Screw Company, New Bedford, Massachusetts

INDIVIDUAL COMPANIES
Anderson Ashburn, American Machinist, New York, N.Y.
William Hofbauer, Mohawk Tools, Inc., Montpelier, Ohio
D. G. Jones, Kenametal, Inc., Latrobe, Pennsylvania
K. B. Kaiser, The Ingersoll Milling Machine Company, Rockford, Illinois
A. M. Mezey, Richards Brothers Punch Company, Detroit, Michigan
W. A. Wagner, The Cleveland Twist Drill Company, Cleveland, Ohio

TECHNICAL COMMITTEE NO. 14

Gear Cutting Tools

Ray H. Blakeman, *Chairman*
John C. Gibson, *Secretary*

R. H. Blakeman, Vice-President, Tool Division, Illinois Tool Works, Inc., 2501 North Keeler Avenue, Chicago, Illinois 60639
J. C. Gibson, Chief Engineer, Illinois Tool and Instrument Division, Illinois Tool Works, 2501 North Keeler Avenue, Chicago, Illinois 60639
Dell Grehn, Gear Engineer, The Falk Corporation, 3001 West Canal Street, Milwaukee, Wisconsin 53208
Richard Hildreth, Chief Engineer, Michigan Tool Company, 7171 East McNichols Road, Detroit, Michigan 48212
P. L. Houser, President, Metal Cutting Tool Institute, 405 Lexington Avenue, New York, N.Y. 10017
Stuart Johnson, Barber-Colman Corporation, Machine & Cutting Tool Division, Rockford, Illinois
C. H. Parker, Assistant Chief of Tool Design, The Fellows Gear Shaper Company, 78 River Street, Springfield, Vermont 05156
G. L. Scott, Staff Engineer, American Gear Manufacturers Association, One Thomas Circle, Washington, D.C. 20005
Harold White, Gear Technician, Manufacturing Department, Caterpillar Tractor Company, Aurora, Illinois

Copyright ASME International
Provided by IHS under license with ASME
No reproduction or networking permitted without license from IHS
Not for Resale

USA STANDARDS COMMITTEE B94
STANDARDIZATION OF CUTTING TOOLS, HOLDERS DRIVERS AND BUSHINGS

OFFICERS

H. J. Moffatt, *Chairman*
A. M. Mezey, *Vice-Chairman*

USA STANDARDS COMMITTEE

THE AMERICAN GEAR MANUFACTURERS ASSOCIATION
P. M. Dean, Jr., Mechanical Technology, Inc., Latham, New York
G. L. Scott, Alternate, American Gear Manufacturers Association, Washington, D.C.

AMERICAN SOCIETY OF MECHANICAL ENGINEERS, THE
C. J. Oxford, Jr., Vice President Research, National Twist Drill & Tool Company, Rochester, Michigan
M. E. Merchant, Director of Scientific Research, The Cincinnati Milling Machine Company, Cincinnati, Ohio

AMERICAN SOCIETY OF TOOL AND MANUFACTURING ENGINEERS
K. A. Lundell, Chief Engineer, The Producto Machine Company, Jamestown, New York
H. J. Moffatt, Caterpillar Tractor Company, East Peoria, Illinois
J. E. Rotchford, Anderson Power Products, Inc., Boston, Massachusetts

CEMENTED CARBIDE PRODUCERS ASSOCIATION
W. E. Montgomery, Firth Sterling, Inc., Pittsburgh, Pennsylvania
A. P. Wherry, Alternate, Cemented Carbide Producers Association, Cleveland, Ohio

GENERAL SERVICES ADMINISTRATION
W. C. Petrie, General Services Administration, Standardization Division, Washington, D.C.

METAL CUTTING TOOL INSTITUTE
L. P. Sohles, Chief Products Engineer, Morse Twist Drill & Machine Company, New Bedford, Massachusetts
P. L. Houser, Alternate, President, Metal Cutting Tool Institute, New York, N.Y.

NATIONAL ASSOCIATION OF PUNCH MANUFACTURERS
R. J. Gargrave, President, DAY/TON Progress Corporation, Dayton, Ohio

NATIONAL BUREAU OF STANDARDS
F. P. Brown, Chief, Shop Division, National Bureau of Standards, Washington, D.C.

SOCIETY OF AUTOMOTIVE ENGINEERS
R. H. Mustonen, General Motors Technical Center, Warren, Michigan
W. H. Seacord, International Harvester Company, Chicago, Illinois

SOCIETY OF CARBIDE ENGINEERS
W. E. Hess, 167 Wilder Street, Hillside, New Jersey

TELEPHONE GROUP
M. C. Berryman, Western Electric Company, Inc., Chicago, Illinois
S. P. Rogacki, Alternate, Western Electric Company, Kearney, New Jersey

Copyright ASME International
Provided by IHS under license with ASME
No reproduction or networking permitted without license from IHS
Not for Resale

CONTENTS

	Page
1. Scope	1
2. Purpose	1
3. Definition of a Gear Shaper Cutter	1
4. Description of Gear Shaper Cutter Types Covered	1
5. Marking of USA Standard Gear Shaper Cutter	1
6. Gear Shaper Cutter Nomenclature	1
7. Tolerances	7
8. Sizes and Dimensions	7

TABLES

TOLERANCES

For Spur and Helical Gears

1. Spacing	8
2. Runout	8
3. Cutter Profile	9
4. Hole	9
5. Other	9

For Herringbone Gears

6. Spacing, Runout, Outside Diameter	10
7. Involute Profile & Tooth Thickness	10
8. Other	10

SIZES & DIMMENSIONS

For Herringbone Cutters

9. Ground, Disk Type, Finishing	11

For Spur & Helical Cutters

10 - 11. Ground, Disk Type, Finishing	12 - 13
12. Ground, Disk Type Finishing, Circular Type Shapenning	14
13. Ground Disk Type Finishing, Helical Type Shapenning	19
14. Ground Deep Counterbore Type Finishing, Circular Type Sharpening	22
15. Ground Deep Counterbore Type Finishing, Helical Type Sharpening	27

Copyright ASME International
Provided by IHS under license with ASME
No reproduction or networking permitted without license from IHS
Not for Resale

USA STANDARD

GEAR SHAPER CUTTERS

1. Scope

1.1 This standard covers types, sizes, tolerances, marking and nomenclature for ground, finishing type gear shaper cutters for generating involute spur and helical gears, splines, and serrations. It also covers ground, finishing type involute herringbone gear shaper cutters for generating herringbone gears.

2. Purpose

2.1 The purpose of this standard is to provide information on standard types, sizes, tolerances, marking and nomenclature of gear shaper cutters to encourage uniformity in specifications.

3. Definition of a Gear Shaper Cutter

3.1 A gear cutting tool that is basically a gear, the teeth of which are relieved to provide cutting edges on the face which is presented to the work.

4. Description of Gear Shaper Cutter Types Covered

4.1 Gear shaper cutters for involute gears

The information given applies to gear shaper cutters for involute spur and helical gears.

4.2 Gear shaper cutters for involute splines

The information given applies to gear shaper cutters for cutting USA standard involute splines (USAS B5.15-1960).

4.3 Gear shaper cutters for involute serrations

The information given applies to gear shaper cutters for cutting USA standard involute serrations (USAS B5.15-1960).

4.4 Herringbone gear shaper cutters

The information given applies to herringbone gear shaper cutters for cutting herringbone or gap type double helical involute gears by the method where two matched cutters are used.

Where the two halves of herringbone or gap type helical gears are cut separately, matched sets of cutters are not required.

5. Marking of USA Standard Gear Shaper Cutters

All cutters shall have the minimum markings shown below, appropriate to the type.

	Marked
Spur Cutters	
Diametral Pitch	DP
Pressure Angle	PA
Base Diameter	BD
Number of Teeth	N
Whole Depth of Cut	WD
Helical Cutters	
Normal Diametral Pitch	NDP
Normal Pressure Angle	NPA
Number of Teeth	N
Whole Depth of Cut	WD
Helix Angle	HA
Lead	Lead
Herringbone Cutters	
Transverse Diametral Pitch	TDP
Transverse Pressure Angle	TPA
Number of Teeth	N
Whole Depth of Cut	WD
Helix Angle	HA
Lead	Lead

6. Gear Shaper Cutter Nomenclature

6.1 Gear Shaper Cutter

A gear cutting tool that is basically a gear, the teeth of which are relieved to provide

Copyright ASME International
Provided by IHS under license with ASME
No reproduction or networking permitted without license from IHS
Not for Resale

cutting edges on the face which is presented to the work.

6.2 General Classifications

6.2.1 Classification Based on Construction

Solid Cutters – Those made of a single piece of tool material.

6.2.2 Classification Based on Cutter Blank Design

Arbor Type Cutters – Those which have a hole for mounting on an arbor, a machine tool spindle, or adapter.

(a) **Disk Type Cutter** – One provided with a counterbore and a suitable face for locking nut or washer. See Figure 1a.

(b) **Deep Counterbore Type Cutter** – One that is similar to a disk type cutter, except that the cutter thickness is increased to allow the counterbore to be sufficiently deep so that the locking nut or cutter spindle will not protrude beyond the cutting face at nominal life. See Figure 1b.

Shank Type Cutters – Those which have an extended portion which locates and secures the cutter in the machine tool spindle.

(a) **Taper Shank Cutter** – A cutter that has an extended portion which is tapered to fit a tapered socket in the machine spindle or in a suitable adapter. The shank is usually provided with a tapped hole in the end to fit a suitable retaining rod or draw bar. See Figures 2a and b.

6.2.3 Classification Based on Application[1]

Finishing Cutter – One which will finish the workpiece to specified profile and dimensions.

Roughing Cutter – One which produces a workpiece profile suitable for a subsequent finishing operation.

Pre-Shaving Cutter – One which leaves a small amount of material on the sides only of the workpiece profile to allow for final finishing in a shaving operation.

Pre-Grinding Cutter – One which leaves a small amount of material on the sides or sides and root of the workpiece profile to allow for final finishing in a grinding operation.

6.2.4 Classification Based on Tooth Profile Produced

Non-Topping Cutter – One which produces only the side and bottom (or root diameter) surfaces of the workpiece profile.

Semi-Topping Cutter or "Chamfering" Cutter – One which produces obvious chamfers at the intersection of the side profiles with the outside diameter surfaces of the workpiece. See Figure 3a.

Topping Cutter – One which produces the entire workpiece profile, including the outside diameter, to specified form and dimensions. See Figure 3b.

Flank Type Cutter – One with a filled in flank which produces a tip relief at the top of the gear tooth. See Figure 3c.

Protuberance Type Cutter – One which has a protuberance on the tip of the cutter tooth which produces a relief or undercut at the bottom of the gear tooth. See Figure 3d.

Full Fillet Type Cutter – One which has a radius on corners or tips of teeth to produce a rounded bottom in the root of the workpiece. See Figure 3e.

6.2.5 Classification Based on Helix

Spur Type Cutter – One which is used to produce spur gears or gears of zero helix. The center line of its teeth lie in the same plane as the axis of the cutter. See Figure 4a.

Helical Type Cutter – One which is used to produce helical gears. Its teeth are helical in nature and are inclined to the helix angle of the gear being cut. Separate cutters are required to produce right- and left-hand helices. See Figure 4b.

(a) A cutter whose teeth twist away from the observer in a clockwise direction will produce left-hand helical external gear teeth and right-hand helical internal gear teeth.

(b) A cutter whose teeth twist away from the observer in a counterclockwise direction will produce right-hand helical external gear teeth and left-hand helical internal gear teeth.

[1] In general, the same cutter blank sizes and dimensions are used for all four cutter classifications.

Copyright ASME International
Provided by IHS under license with ASME
No reproduction or networking permitted without license from IHS
Not for Resale

GEAR SHAPER CUTTERS

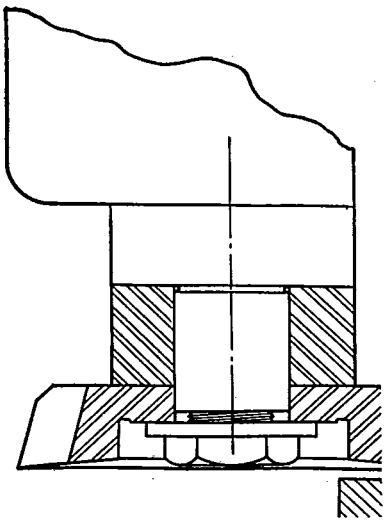

a. DISC TYPE CUTTER

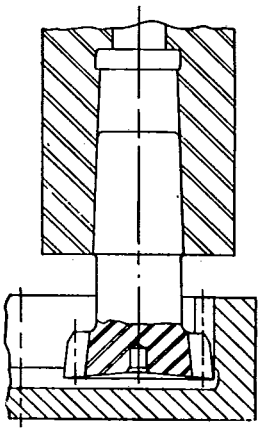

a. TAPER SHANK CUTTER

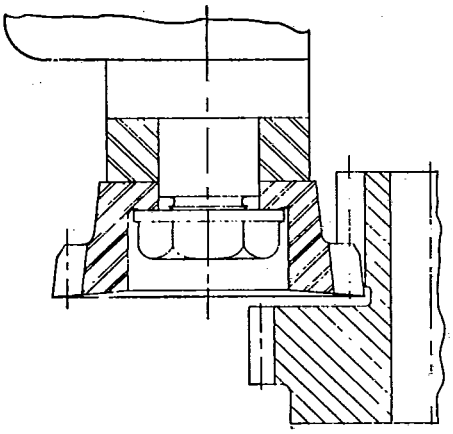

b. DEEP COUNTERBORE TYPE CUTTER

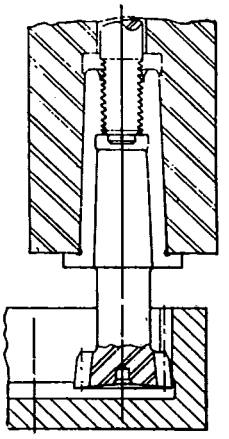

b. TAPER SHANK CUTTER

FIG. 1 ARBOR TYPE CUTTERS

FIG. 2 SHANK TYPE CUTTERS

Copyright ASME International
Provided by IHS under license with ASME
No reproduction or networking permitted without license from IHS
Not for Resale

USA STANDARD

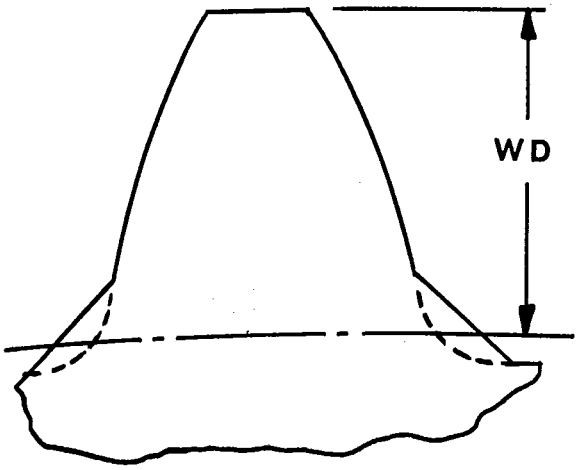

a. SEMI TOPPING OR CHAMFERING TYPE CUTTER

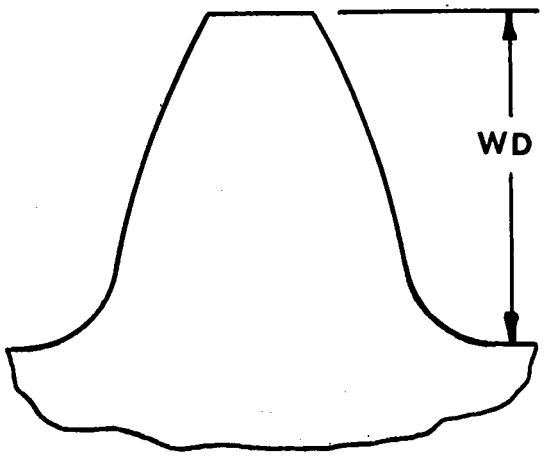

b. TOPPING TYPE CUTTER

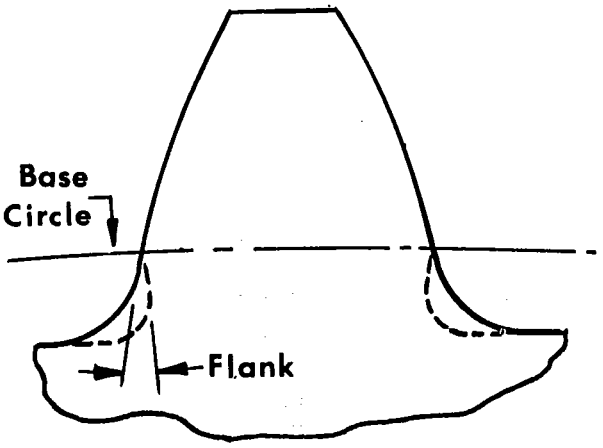

c. FLANK TYPE CUTTER

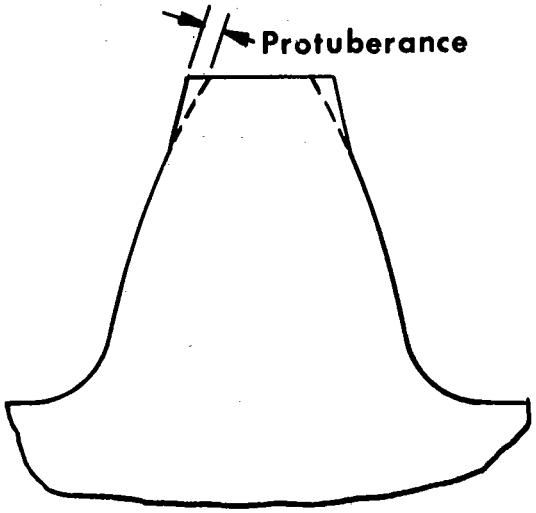

d. PROTUBERANCE TYPE CUTTER

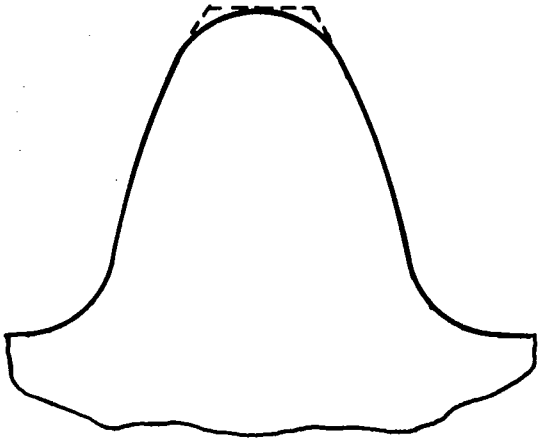

e. FULL FILLET TYPE CUTTER

FIG. 3 CUTTER TOOTH PROFILES

Copyright ASME International
Provided by IHS under license with ASME
No reproduction or networking permitted without license from IHS
Not for Resale

GEAR SHAPER CUTTERS

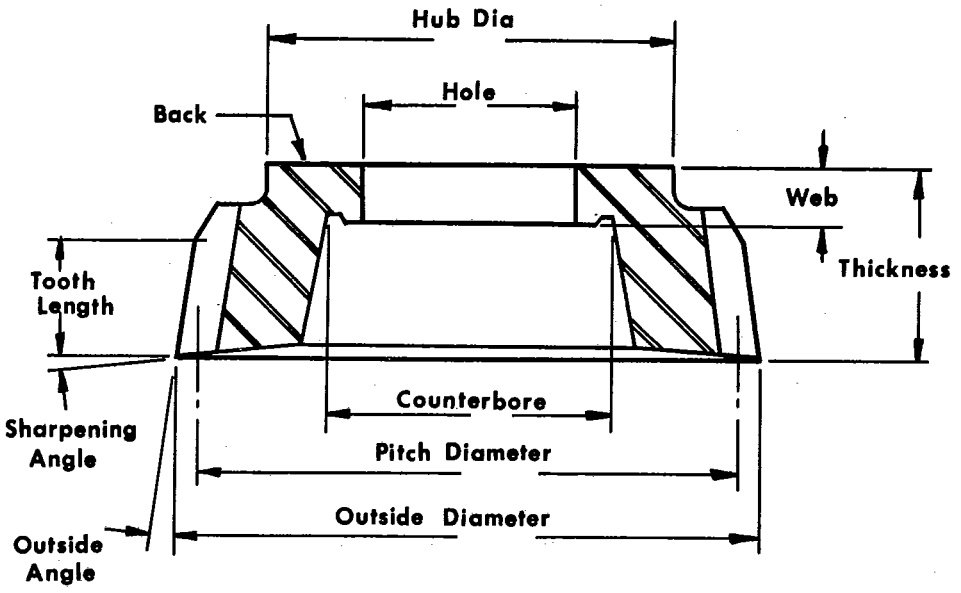

a. SPUR TYPE CUTTER WITH TERMS ILLUSTRATED

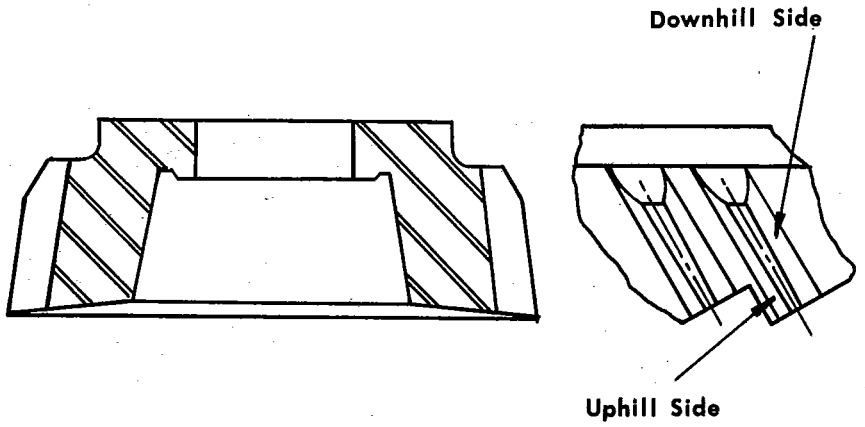

b. HELICAL TYPE CUTTER
(Normal Sharpening Shown)

FIG. 4 SPUR AND HELICAL TYPE CUTTERS †

† For Herringbone cutters see TABLE 9.

Copyright ASME International
Provided by IHS under license with ASME
No reproduction or networking permitted without license from IHS
Not for Resale

6.2.6 Classification Based on Type of Sharpening

Circular Sharpened Cutter – Where the cutting face is sharpened in a single operation as the cutter revolves on its own axis.

(a) **Conical Sharpening** – Where the cutting face is sharpened as a cone on the cutter axis.

(b) **Flat Sharpening** – Where the cutting face is sharpened as a plane surface, perpendicular to the cutter axis.

Helical Sharpened Cutter – Where the teeth are individually sharpened, in a radial direction, with cutter rotated to the proper sharpening angle about an axis parallel to the mounting face, and tipped to the correct "face" sharpening angle.

(a) **Normal Sharpening** – Where the sharpening angle is equal to the helix angle.

(b) **Off Normal Sharpening** – Where the sharpening angle differs from the helix angle.

Involute Sharpened Cutter – An alternate sharpening for helical cutters, which maintains cutting edges in a plane perpendicular to the cutter axis. After "flat" grinding the teeth are individually sharpened at approximately the helix angle, leaving a chip clearance groove on the uphill side and a narrow land on the downhill side, using a small wheel which follows the involute profile.

Vee Sharpened Cutter – Where the teeth are individually sharpened with a cone shaped wheel, to control cutting edge rake angles for special cases.

6.3 Back

That surface of the cutter opposite the cutting face. See Figure 4a.

6.4 Terms

Chamfer Length – Axial length of the chamfer at the back of the cutter teeth.

Chamfering Ramp – The filled-in portion of a semi-topping or chamfering cutter designed to produce a chamfer at the tip of the work gear teeth.

Counterbore – An enlargement of the cutter hole exclusive of the web, to provide space for a retaining nut and to facilitate sharpening.

Cutting Face – The front or forward face of the cutter against which the chips impinge.

Depth of Cut – The radial distance that the cutter teeth are engaged with the work.

Draw Bar Hole – A threaded hole for a draw bar to retain a shank type cutter.

Face Angle – See preferred term **Sharpening Angle.**

Flank – That portion of tooth profile which produces the tip relief on the workpiece.

Flank Modification – The filled-in flank of a cutter which produces an approximately uniform degree of tip relief on the workpiece during the life of the cutter.

Flange – An enlarged cylindrical portion adjacent to the large end of a tapered shank cutter.

Helix Angle – The inclination of the cutter tooth measured from the axis of the cutter, at the pitch diameter of the cutter.

Hole – A hole through the cutter web which provides a means of centering and mounting.

Hub – 1. A short extension used on some disk-type shaper cutters. An indicating diameter may be ground on its periphery. It may contain a keyway. 2. The longer extension on deep counterbore type shaper cutters. An indicating diameter may be ground on its periphery. It may contain a keyway.

Indicating Diameter – The portion of the hub or shank of a cutter which is ground concentric to the axis of the cutter to check runout in mounting.

Keyway – A slot to provide for positive drive or positioning, located in the hole or on the mounting face of the cutter.

Lead – The axial advance of a cutter tooth as it makes one complete rotation on its axis.

Neck – That portion of a shank type cutter between the tooth portion and the shank. It may be plain or flutted and may have an indicating diameter.

Outside Angle – The angle between the axis and the outside surface, containing the tops of the cutting teeth, measured in an axial plane.

Outside Diameter – The diameter of the circle that contains the outermost points of the cutter teeth.

Copyright ASME International
Provided by IHS under license with ASME
No reproduction or networking permitted without license from IHS
Not for Resale

Overall Length – The axial length from cutting face to extreme end of shank, of shank type cutters.

Pitch Diameter – The nominal diameter for design purposes, obtained by dividing the number of teeth in the cutter by the transverse diametral pitch.

Protuberance – A rising projection on involute profile at tip of cutter teeth designed to produce a modification or undercut near the root of work teeth.

Relief – The result of removal of tool material behind or adjacent to a cutting edge to provide clearance.

Root Clearance – Depth of cutter teeth minus depth of cut in work gear.

Runout – (tiv) measured by Cone, Ball or Pin contacting at approximate Pitch Diameter.

Shank – That portion of a shank type cutter which locates and drives the cutter from the machine spindle or adapter.

Sharpening Angle – The angle the cutting face makes with a transverse plane. See Figure 4a.

Side of Helical Cutter Tooth – In reference to a helical cutter.

(a) *Uphill* – That side of the cutter tooth, which, including the side clearance, has the lower helix angle. See Figure 4b.

(b) *Downhill* – That side of the cutter tooth, which, including the side clearance, has the higher helix angle. See Figure 4b.

Thickness – Distance between mounting and cutting faces of disk and deep counterbore type cutters.

Tip Chamfer – The corner chamfer at junction of cutter tooth profile and outside diameter.

Tip Radius – The corner or cap radius joining the cutter tooth profile and outside diameter. Used to produce a fillet root or blend corners in root of work gear.

Tooth Face – See preferred term **cutting face.**

Tooth Length – The length of the cutter tooth from cutting face to the start of chamfer at the back of the cutter tooth.

Tooth Profile – The outline or contour of the cutter tooth cutting edges.

Total Indicator Reading (tir) – See preferred term **total indicator variation.**

Total Indicator Variation (tiv) – The difference between maximum and minimum indicator readings during a checking cycle.

Wall – The material between the root of the cutter and the counterbore.

Web – That portion of the cutter between the mounting face and the retaining face.

Whole Depth (WD) – The radial depth which the gear shaper cutter is designed to produce on the workpiece.

7. Tolerances

7.1 Tolerances for spur and helical ground finishing gear shaper cutters for gears, splines, and serrations of involute form are given in Tables 1 to 5 inclusive.

7.2 Tolerances for herringbone ground finishing gear shaper cutters for involute form herringbone gears with transverse pressure angle of 19 degrees and over, and a maximum helix angle of 30 degrees are given in Tables 6, 7 and 8.

8. Sizes and Dimensions

8.1 Sizes and dimensions for spur and helical ground finishing gear shaper cutters for gears, splines and serrations of involute form are given in Tables 10 to 15 inclusive.

8.2 Sizes and dimensions for herringbone ground finishing gear shaper cutters for involute form herringbone gears with transverse pressure angle of 19 degrees and over, and a maximum helix angle of 30 degrees are given in Table 9.

Copyright ASME International
Provided by IHS under license with ASME
No reproduction or networking permitted without license from IHS
Not for Resale

Table 1. Spacing Tolerances (Spur and Helical Ground Finishing Gear Shaper Cutters) (Measured at Approximate Pitch Diameter)

	Cutter Diameter		
	Thru 3.750 Pitch Diameter	Over 3.750 Thru 7.250 Pitch Diameter	Over 7.250 Pitch Diameter
Maximum variation between adjacent teeth – Spur Cutters and Helical Cutters thru 35° Helix Angle	0.0002	0.00025	0.0003
Maximum variation between adjacent teeth – Helical Cutters over 35° thru 45° Helix Angle	0.00025	0.0003	0.0004
Maximum variation between any two readings – Spur Cutters and Helical Cutters thru 35° Helix Angle	0.0003	0.0004	0.0005
Maximum variation between any two readings – Helical Cutters over 35° thru 45° Helix Angle	0.0004	0.0005	0.0006

All dimensions given in inches.

Table 2. Runout Tolerances (Spur and Helical Ground Finishing Gear Shaper Cutters) (tiv Measured by Cone, Ball or Pin Contacting at Approximate P.D.)

	Nominal Pitch Diameter and Nominal (Normal) Pressure Angle											
	Thru 1.875		Over 1.875 Thru 3.250		Over 3.250 Thru 3.750		Over 3.750 Thru 6.250		Over 6.250 Thru 7.250		Over 7.250	
	Over 19°	13° Thru 19°	Over 19°	13° Thru 19°	Over 19°	13° Thru 19°	Over 19°	13° Thru 19°	Over 19°	13° Thru 19°	Over 19°	13° Thru 19°
Disk Type Cutters Spur and Helical Thru 35° Helix Angle	0.0004	0.0005	0.0005	0.0007	0.0006	0.0008	0.0007	0.0009	0.0009	0.0012	0.0012	0.0015
Disk Type Helical Cutters Over 35° Thru 45° Helix Angle	0.0006	0.0008	0.0007	0.0009	0.0008	0.0011	0.0009	0.0012	0.0011	0.0015		
Deep Counterbore Type Cutters Spur and Helical Thru 35° Helix Angle	0.0005	0.0007	0.0006	0.0008	0.0007	0.0009	0.0008	0.0011	0.0010	0.0013	0.0012	0.0015
Deep Counterbore Type Helical Cutters Over 35° Thru 45° Helix Angle	0.0007	0.0009	0.0008	0.0011	0.0009	0.0012	0.0010	0.0013	0.0013	0.0015		
Shank Type Cutters	0.0005	0.0007										

All dimensions given in inches.

Copyright ASME International
Provided by IHS under license with ASME
No reproduction or networking permitted without license from IHS
Not for Resale

GEAR SHAPER CUTTERS

Table 3. Cutter Profile Tolerances (tiv) (Spur and Helical Ground Finishing Gear Shaper Cutters)

	Whole Depth of Product Tooth			
	Thru 0.395	Over 0.395 Thru 0.610	Over 0.610 Thru 0.980	Over 0.980 Thru 1.125
Spur and Helical Cutters through 35° Helix Angle	0.0002	0.0003	0.0004	0.0006
Helical Cutters Over 35° through 45° Helix Angle	0.0003	0.0004	0.0005	0.0006

All dimensions given in inches.

Table 4. Hole Tolerances (Spur and Helical Ground Finishing Gear Shaper Cutters)

Nominal Size	Actual Size and Tolerance
½	0.5000 +0.0001 −0.0000
¾	0.7500 +0.0001 −0.0000
1	1.0000 +0.0001 −0.0000
1¼	1.2497 +0.0002 −0.0000
1¾	1.7500 +0.0002 −0.0000
4	4.0000 +0.0002 −0.0000

All dimensions given in inches.

Table 5. Other Tolerances (in Inches) (Spur and Helical Ground Finishing Gear Shaper Cutters)

1. Tooth thickness tolerance + 0.000 − 0.001 (with respect to finished outside diameter) except when coarser than 3 pitch (or over 7.250 pitch diameter) the tolerance is + 0.000 − 0.002.
2. Back to be flat to concave within 0.0002.
3. Outside angle ± 0° 5'.
4. Sharpening angle ± 0° 5'.
5. Side relief angle ± 0° 5'.
6. Shank taper radial runout, from centers, 0.0002 tiv.
7. Shank taper diameter (See Table 11) 0.002 − 0.000.
8. Indicating band runout (when supplied) with respect to mounting surfaces 0.0002 tiv.
9. Outside diameter radial runout:

thru 3.250 PD	0.0005 tiv
over 3.250 PD thru 4.750 PD	0.0007 tiv
over 4.750 PD thru 7.250 PD	0.0010 tiv
over 7.250 PD	0.0015 tiv

10. Outside diameter tolerances (based on design proportions):

thru 1.875 PD	0.012
over 1.875 PD thru 4.750 PD	0.020
over 4.750 PD thru 6.250 PD	0.030
over 6.250 PD thru 7.250 PD	0.040
over 7.250 PD	0.050

Copyright ASME International
Provided by IHS under license with ASME
No reproduction or networking permitted without license from IHS
Not for Resale

Table 6. Spacing and Runout Tolerances and Outside Diameter Tolerances (Herringbone Ground Finishing Gear Shaper Cutters) †

Nominal Pitch Diameter	Transverse Diametral Pitch	Tooth Spacing – Maximum Variation Between		Pitch Diameter Runout	Outside Diameter
		Adjacent Teeth	Any Two Readings		
4	4 thru 6	0.0003	0.0004	0.0007	0.020
	over 6 to 20	0.0002	0.0003		
6	2 thru 6	0.0004	0.0005	0.0009	0.030
	over 6 thru 16	0.0003	0.0004		
8	1½ thru 3	0.0005	0.0006	0.0011	0.050
	over 3 thru 6	0.0004	0.0005		
	over 6 thru 12	0.0003	0.0004		

All dimensions given in inches.

† Measured approximate P. D.

Table 7. Involute Profile and Tooth Thickness Tolerances (Herringbone Ground Finishing Gear Shaper Cutters)

	Transverse Diametral Pitch		
	1½ thru 3	Over 3 thru 6	Over 6
Involute Profile, (tiv)	0.0005	0.0004	0.0003
Tooth Thickness	+ 0.000 – 0.004	+ 0.000 – 0.002	+ 0.000 – 0.001

All dimensions given in inches.

Table 8. Other Tolerances in Inches (Herringbone Ground Finishing Gear Shaper Cutters)

1. Hole Diameter + 0.0002 – 0.0000.
2. Matched pairs, right-hand and left-hand, have outside diameters and widths within 0.002.
3. Back to be flat to concave within 0.0002.
4. Outside angle ± 0° 5'
5. Side relief angle ± 0° 5'.
6. Outside diameter radial runout, 4 inches 0.0007 tiv; 6 inches and 8 inches 0.0010 tiv..
7. Indicating band runout (when supplied), with respect to hole 0.0002 tiv.

Copyright ASME International
Provided by IHS under license with ASME
No reproduction or networking permitted without license from IHS
Not for Resale

GEAR SHAPER CUTTERS

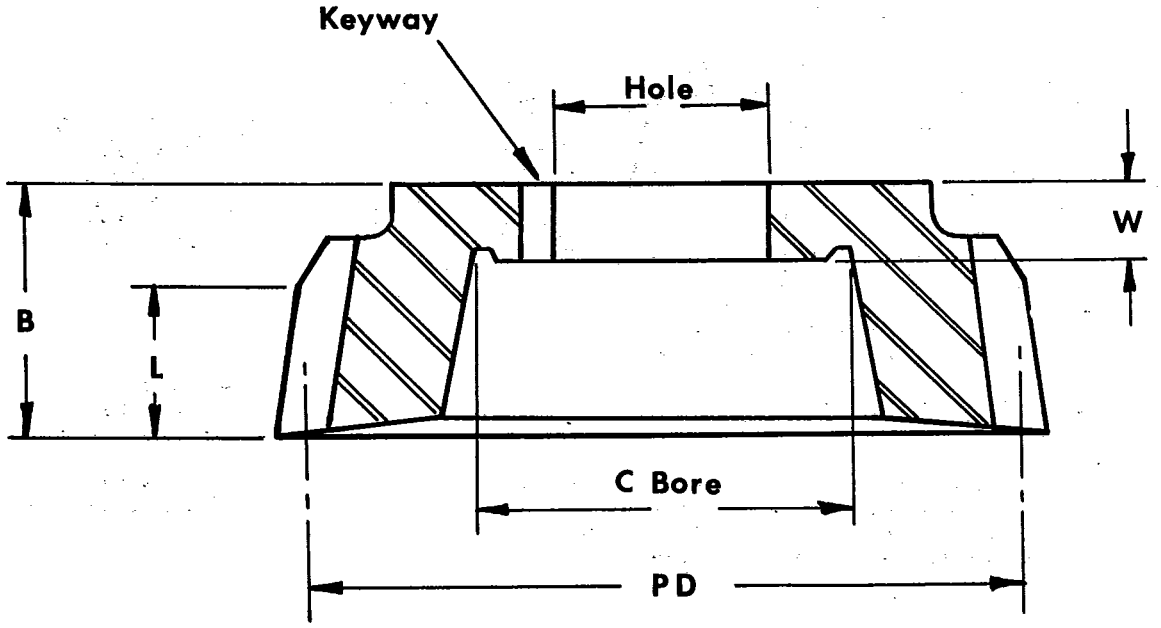

For cutting involute herringbone gears of 1½ up to 20 diametral pitch, having a helix angle not exceeding 30 degrees and a transverse pressure angle of 19 degrees or more.

Furnished in matched sets of two cutters, one right-hand and one left-hand.

Table 9. Sizes and Dimensions of Ground, Disk Type, Finishing Gear Shaper Cutters For Herringbone Gears

PD Nominal	Hole Nominal	C bore Minimum	Keyway Nominal	Web W	Transverse Diametral Pitch	Thickness B	Nominal Tooth Length L
4	2 1/8 Std. 2 5/16 Opt.	3	3/8 × 3/16	7/16	4 thru 8	1 1/8	7/8
					over 8 to 20	1 1/8	11/16
6	3 Std. 3 1/2 Opt.	4 1/8	1/2 × 9/32	9/16	2 thru 3	1 1/2	1 1/4
					over 3 thru 6	1 1/2	1 1/8
					over 6 thru 16	1 1/2	15/16
8	4	5 3/8	1/2 × 9/32	7/8	1 1/2 thru 2 1/2	2	1 9/16
					over 2 1/2 thru 5	2	1 7/16
					over 5 thru 12	2	1 3/16

All dimensions given in inches.

Copyright ASME International
Provided by IHS under license with ASME
No reproduction or networking permitted without license from IHS
Not for Resale

USA STANDARD

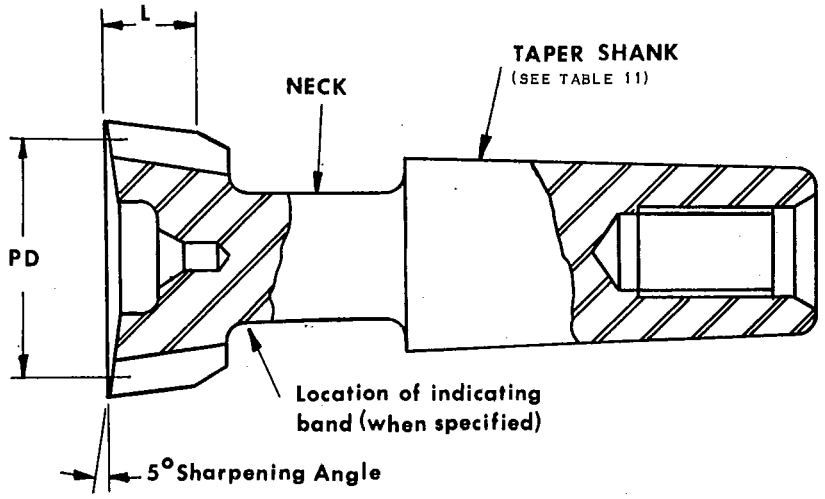

Circular sharpening as shown above is standard for cutters coarser than 41 NDP with helix angles less than 9 degrees, and for cutters 41 NDP and finer with helix angles thru 15 degrees.

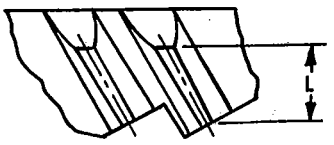

Helical sharpening as shown above is standard for cutters coarser than 41 NDP with helix angles of 9 degrees or more.

Table 10. Sizes and Dimensions of Ground Finishing Taper Shank Gear Cutters For Cutting Spur and Helical Teeth

Normal Diametral Pitch (See Notes below)	Pitch Diameter of Cutter			Nominal Tooth Length L
	Nominal Size	Actual Range		
		Over	Thru	
6 up to 10	¾ & 1	0.6250	1.1250	½
	1¼ & 1½	1.1250	1.6250	9/16
10 up to 17	½	0.3750	0.6250	3/8
	¾ & 1	0.6250	1.1250	7/16
	1¼ & 1½	1.1250	1.6250	½
17 up to 25	½	0.3750	0.6250	5/16
	¾ & 1	0.6250	1.1250	3/8
	1¼ & 1½	1.1250	1.6250	7/16
25 up to 41	¼	0.1250	0.3750	¼
	½, ¾ & 1	0.3750	1.1250	5/16
	1¼ & 1½	1.1250	1.6250	3/8
41 up to 65	¼	0.1250	0.3750	3/16
	½	0.3750	0.6250	¼
	¾ thru 1½	0.6250	1.6250	5/16
65 up to 101	¼	0.1250	0.3750	3/16
	½, ¾ & 1	0.3750	1.1250	¼
101 up to 129	¼	0.1250	0.3750	5/32
	½, ¾ & 1	0.3750	1.1250	7/32

All dimensions given in inches.

NOTES: 1. The normal diametral pitch governing the selection of cutter size is the numerator pitch in the case of stub pitches, combination pitches, involute spline pitches and involute serration pitches.

2. The cutters shown for normal diametral pitches 6 up to 10 are also suitable for 3/6, 4/8, 5/7, 5/10 and 5 pitch AGMA stub tooth form.

Copyright ASME International
Provided by IHS under license with ASME
No reproduction or networking permitted without license from IHS
Not for Resale

GEAR SHAPER CUTTERS

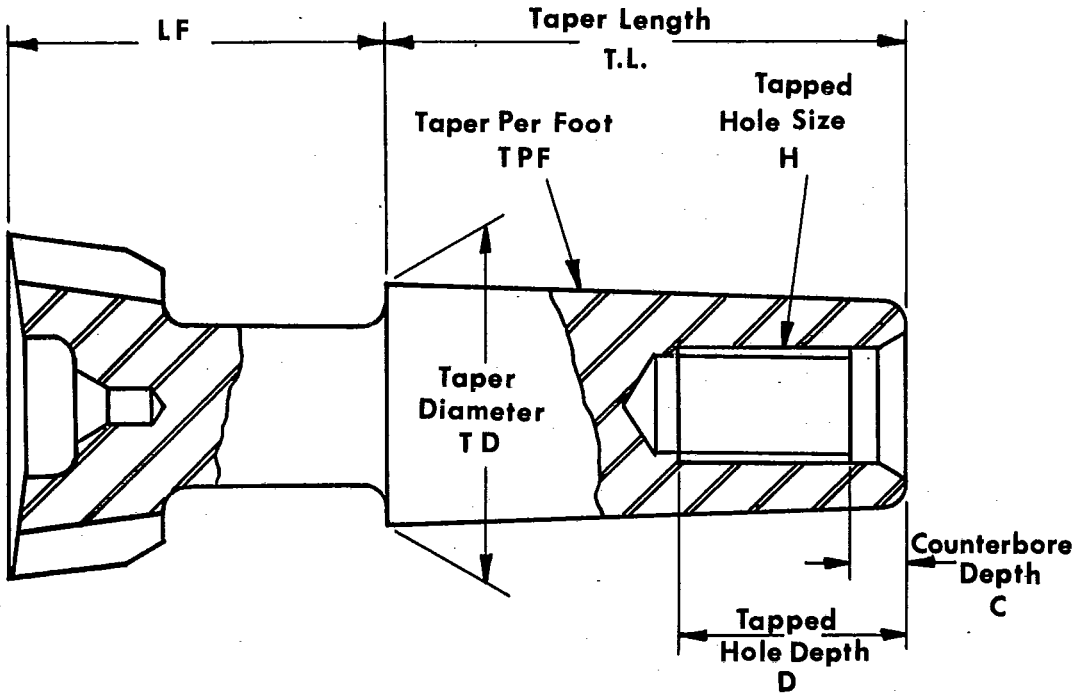

Table 11. Sizes and Dimensions of Ground Finishing Taper Shank Gear Shaper Cutters For Cutting Spur and Helical Teeth

Taper Shank Size	LF†	TD	TL	TPF	H	D	C	Application
A	1 5/8	1.062	2¼	0.62550	½–13 UNC	1	1/8	Heavy Duty and Pitches Coarser than 10 and where the neck diameter is ¾ through 1 1/32
B	1 5/8	1.062	1½	0.62550	¼–20 UNC	13/16	¼	Medium Duty and Pitches from 6 to 17 and where the neck diameter is ½ through 1 1/32. Also used with screw-on adaptors
C	1 5/8	0.700	1½	0.59941	¼–20 UNC	5/8	1/8	Medium Light Duty and Pitches from 10 to 25 and where the neck diameter is 3/8 through 11/16
D	1	0.475	1	0.59858	# 10–32 UNF	½	1/16	Light Duty and Pitches 25 and finer and where the neck diameter is 3/16 through 15/32
E	¾	0.250	¾	0.6000	# 5–40 UNC	5/16	1/16	Extra Light Duty and Pitches 32 and finer and where the neck diameter is 1/8 through 15/64

All dimensions given in inches.

† Nominal figure given, varies with specific application requirements.

Copyright ASME International
Provided by IHS under license with ASME
No reproduction or networking permitted without license from IHS
Not for Resale

USA STANDARD

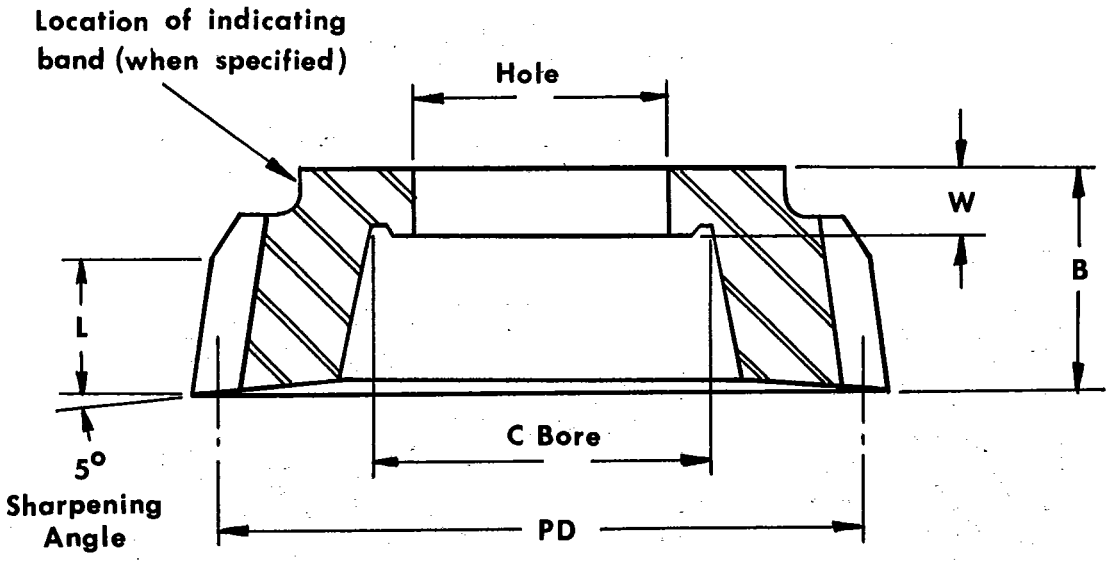

The Circular sharpening as shown is standard for all spur cutters and for helical cutters coarser than 41 NDP with helix angles less than 9 degrees, and for helical cutters 41 NDP and finer with helix angles thru 15 degrees.

Table 12. Sizes and Dimensions of Ground, Disk Type Finishing Gear Shaper Cutters (for cutting Spur Gears and for cutting Helical Gears where the Circular Type of Cutter Sharpening is used)

PD Nominal	Hole Nominal	C bore Minimum	Web W	Normal Diametral Pitch	Thickness B	Nominal Tooth Length L
1 1/4	1/2	3/4	3/16	14, 15 & 16 AGMA Stub 10/20, 12/24, 14/18 15/20, 16/21, 16/32	3/4	1/2
				17 up to 25	5/8	7/16
				25 up to 41	1/2	3/8
				41 up to 65	1/2	5/16
				65 up to 101	1/2	1/4
				101 up to 129	1/2	7/32
1 1/2	1/2	3/4	3/16	5/10, 6/12, 8/16, 9/11 8 & 9 AGMA Stub	3/4	9/16
				10 up to 17	3/4	1/2
				17 up to 25	5/8	7/16
		1	3/16	25 up to 41	1/2	3/8
				41 up to 65	1/2	5/16
				65 up to 101	1/2	1/4
				101 up to 129	1/2	7/32

All dimensions given in inches.

(continued)

Copyright ASME International
Provided by IHS under license with ASME
No reproduction or networking permitted without license from IHS
Not for Resale

Table 12. Sizes and Dimensions of Ground, Disk Type Finishing Gear Shaper Cutters (Cont.)

PD Nominal	Hole Nominal	C' bore Minimum	Web W	Normal Diametral Pitch	Thickness B	Nominal Tooth Length L
1¾	½	¾	3/16	8 up to 10 4/8, 6/8, 7/9 7 AGMA Stub	¾	9/16
		⅞	3/16	10 up to 17	¾	½
				5/10, 6/12, 8/16, 9/11 8 & 9 AGMA Stub	¾	9/16
		1	3/16	17 up to 25	⅝	7/16
		1¼	3/16	25 up to 41	½	⅜
				41 up to 65	½	5/16
				65 up to 101	½	¼
				101 up to 129	½	7/32
2	¾	1	3/16	8 up to 10 4/8, 6/8, 7/9 7 AGMA Stub	¾	9/16
		1⅛	3/16	10 up to 17	¾	½
				5/10, 6/12, 8/16, 9/11 8 & 9 AGMA Stub	¾	9/16
		1¼	3/16	17 up to 25	⅝	7/16
		1½	3/16	25 up to 41	½	⅜
				41 up to 65	½	5/16
				65 up to 101	½	¼
2½	1	1½	3/16	8 up to 10 4/8, 6/8, 7/9 7 AGMA Stub	¾	9/16
		1⅝	3/16	10 up to 17	¾	½
				5/10, 6/12, 8/16, 9/11 8 & 9 AGMA Stub	¾	9/16
		1¾	3/16	17 up to 25	⅝	7/16
		2	3/16	25 up to 41	½	⅜
				41 up to 65	½	5/16
				65 up to 101	½	¼
3	1¼	2	5/16	2.5/5 5 up to 7 4 & 5 AGMA Stub 7 up to 10 4/8, 5/7, 6/8, 7/9	1	⅝
			¼	10 up to 17 5/10, 6/12, 8/16, 9/11 8 & 9 AGMA Stub	⅞	⅝
		2¼	¼	17 up to 25	¾	½
				25 up to 41	⅝	⅜
				41 up to 65	⅝	5/16

All dimensions given in inches.

(continued)

Copyright ASME International
Provided by IHS under license with ASME
No reproduction or networking permitted without license from IHS
Not for Resale

USA STANDARD

Table 12. Sizes and Dimensions of Ground, Disk Type Finishing Gear Shaper Cutters (Cont.)

PD Nominal	Hole Nominal	C bore Minimum	Web W	Normal Diametral Pitch	Thickness B	Nominal Tooth Length L
3½	1¼	2	5/16	4 up to 7 2.5/5, 3/4, 3/6, 4/5 3.5, 4 & 5 AGMA Stub	1	5/8
	1¼ Standard 1¾ Optional	2 5/16	5/16	7 up to 10 4/8, 5/7, 6/8, 7/9 6 & 7 AGMA Stub	1	5/8
		2½	5/16	10 up to 17 5/10, 6/12, 8/16, 9/11 8 & 9 AGMA Stub	7/8	5/8
		2¾	1/4	17 up to 25	3/4	1/2
				25 up to 41	5/8	3/8
				41 up to 49	5/8	5/16
4	1¼ Standard 1¾ Optional 1¼ Standard 1¾ Optional	2 5/16	5/16	3 up to 4 2.5 & 3 AGMA Stub	1 1/8	5/8
				4 up to 5 3/4 3.5 AGMA Stub	1	5/8
		2½	5/16	5 up to 7 2.5/5, 3/6, 4/5 4 & 5 AGMA Stub	1	5/8
		2¾	5/16	7 up to 10 4/8, 5/7, 6/8, 7/9 6 & 7 AGMA Stub	1	5/8
		3	5/16	10 up to 17 5/10, 6/12, 8/16, 9/11 8 & 9 AGMA Stub	7/8	5/8
		3¼	5/16	17 up to 25	3/4	1/2
				25 up to 41	3/4	3/8
4½	1¼ Standard 1¾ Optional	2½	5/16	3 up to 4 2.5 & 3 AGMA Stub	1 1/8	5/8
		2¾	5/16	4 up to 5 3/4 3.5 AGMA Stub	1	5/8
		3	5/16	5 up to 7 2.5/5, 3/6, 4/5 4 & 5 AGMA Stub	1	5/8
		3¼	5/16	7 up to 10 4/8, 5/7, 6/8, 7/9 6 & 7 AGMA Stub	1	5/8
		3½	5/16	10 up to 17 5/10, 6/12, 8/16, 9/11 8 AGMA Stub	7/8	5/8
		3¾	5/16	17 up to 25	3/4	1/2
				25 up to 41	3/4	3/8

All dimensions given in inches

(continued)

Copyright ASME International
Provided by IHS under license with ASME
No reproduction or networking permitted without license from IHS
Not for Resale

Table 12. Sizes and Dimensions of Ground, Disk Type Finishing Gear Shaper Cutters (Cont.)

PD Nominal	Hole Nominal	C bore Minimum	Web W	Normal Diametral Pitch	Thickness B	Nominal Tooth Length L
5	1¾ Standard 1¼ Optional	3 1/16	7/16	3 up to 5 ¾ 2.5, 3, 3.5 AGMA Stub	1 3/8	7/8
		3 5/16	3/8	5 up to 7 2.5/5, 3/6, 4/5 4 & 5 AGMA Stub	1¼	7/8
		3 9/16	3/8	7 up to 10 4/8, 5/7, 5/10, 6/8, 6/12 6 AGMA Stub	1¼	7/8
	1¾ Standard 1¼ Optional	3¾	3/8	10 up to 17	1	11/16
		4	3/8	17 up to 25	7/8	9/16
				25 up to 41	7/8	7/16
5½	1¾ Standard 1¼ Optional	3 1/16	7/16	2.5 up to 3 2 & 2.25 AGMA Stub	1½	7/8
		3 5/16	7/16	3 up to 4 2.5 & 3 AGMA Stub	1 3/8	7/8
		3 9/16	7/16	4 up to 5 ¾ 3.5 AGMA Stub	1 3/8	7/8
		3¾	3/8	5 up to 7 2.5/5, 3/6, 4/5 4 & 5 AGMA Stub	1¼	7/8
		4	3/8	7 up to 10 4/8, 5/7, 5/10, 6/8, 6/12 6 AGMA Stub	1¼	7/8
		4¼	3/8	10 up to 17	1	11/16
		4½	3/8	17 up to 25	7/8	9/16
6	1¾	3 5/16	½	2 up to 2.5	1¾	1
		3 9/16	½	2.5 up to 3 2 & 2.25 AGMA Stub	1 5/8	1
		3¾	½	3 up to 4 2.5 & 3 AGMA Stub	1½	1
		4	½	4 up to 7 2.5/5, 3/4, 3/6, 4/5 3.5, 4 & 5 AGMA Stub	1½	1
		4¼	½	7 up to 10 4/8, 5/7, 5/10, 6/8, 6/12 6 AGMA Stub	1½	1
		4½	½	10 up to 17	1¼	13/16
				17 up to 25	1¼	5/8

All dimensions given in inches.

(continued)

Copyright ASME International
Provided by IHS under license with ASME
No reproduction or networking permitted without license from IHS
Not for Resale

USA STANDARD

Table 12. Sizes and Dimensions of Ground, Disk Type Finishing Gear Shaper Cutters (Cont.)

PD Nominal	Hole Nominal	C bore Minimum	Web W	Normal Diametral Pitch	Thickness B	Nominal Tooth Length L
6½	1¼	3 9/16	½	2 up to 2.5 1.75 AGMA Stub	1¾	1
		4	½	2.5 up to 3 2 & 2.25 AGMA Stub	1 5/8	1
		4¼	½	3 up to 4 2.5 & 3 AGMA Stub	1½	1
		4½	½	4 up to 7 2.5/5, 3/4, 3/6, 4/5 3.5, 4 & 5 AGMA Stub	1½	1
		4¾	½	7 up to 10 4/8, 5/7, 5/10, 6/8, 6/12 6 AGMA Stub	1½	1
		5	½	10 up to 17 17 up to 25	1¼ 1¼	13/16 5/8
7	1¼	4	½	2 up to 2.5 1.75 AGMA Stub	1¾	1
		4½	½	2.5 up to 3 2 & 2.25 AGMA Stub	1 5/8	1
		4¾	½	3 up to 4 2.5 & 3 AGMA Stub	1½	1
		5	½	4 up to 7 2.5/5, 3/4, 3/6, 4/5 3.5, 4 & 5 AGMA Stub	1½	1
		5¼	½	7 up to 10 4/8, 5/7, 5/10, 6/8, 6/12 6 AGMA Stub	1½	1
		5½	½	10 up to 17 17 up to 25	1¼ 1¼	13/16 5/8
8 †	4	5	¾	2 up to 3 1.75, 2, 2.25 AGMA Stub	2	1¼
		5 3/8	¾	3 up to 4 2.5 & 3 AGMA Stub	2	1¼
		5¾	¾	4 up to 5 ¾ 3.5 AGMA Stub	2	1¼
8½ †	4	6	¾	5 up to 10 2.5/5, 3/6, 4/8 5/7, 5/10, 6/8, 6/12, 7/9 4, 5, 6 & 7 AGMA Stub	2	1¼
		6½	¾	10 up to 17 17 up to 20	1¾ 1¾	1 ¾

All dimensions given in inches.

†8 & 8½ inch P. D. Cutters have unaligned 5/8 × 5/32 keyway in the back face.

Copyright ASME International
Provided by IHS under license with ASME
No reproduction or networking permitted without license from IHS
Not for Resale

GEAR SHAPER CUTTERS

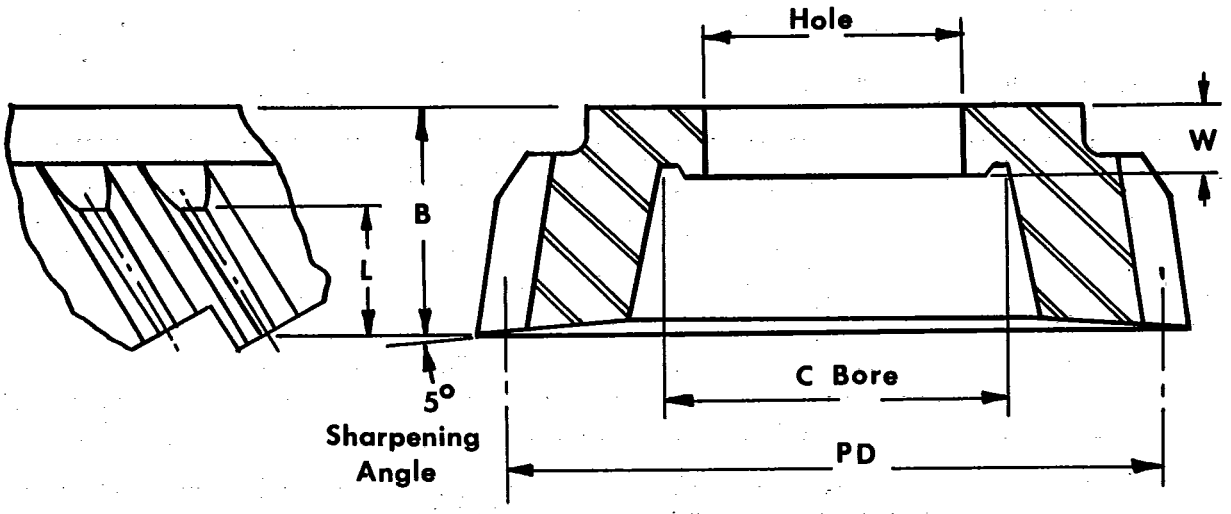

Table 13. Sizes and Dimensions of Ground Disk Type Finishing Gear Shaper Cutters Having Helical Type Sharpening and Helix Angles of 9 degrees thru 35 degrees for cutting helical gears

PD Nominal	Hole Nominal	C bore Minimum	Web W	Normal Diametral Pitch	Thickness B	Nominal Tooth Length L
1¼	½	¾	3/16	17 up to 25	¾	7/16
				25 up to 41	5/8	3/8
1½	½	¾	¼	10 up to 17	7/8	½
			3/16	17 up to 25	¾	7/16
		7/8	3/16	25 up to 41	5/8	3/8
1¾	½	¾	¼	8 up to 10	1	9/16
		7/8	¼	10 up to 17	7/8	½
		1	3/16	17 up to 25	¾	7/16
		1 1/8	3/16	25 up to 41	5/8	3/8
2	¾	1	¼	8 up to 10	1	9/16
		1 1/8	¼	10 up to 17	7/8	½
		1 ¼	3/16	17 up to 25	¾	7/16
		1 3/8	3/16	25 up to 41	5/8	3/8

All dimensions given in inches

(continued)

Copyright ASME International
Provided by IHS under license with ASME
No reproduction or networking permitted without license from IHS
Not for Resale

USA STANDARD

Table 13. Sizes and Dimensions of Ground Disk Type Finishing Gear Shaper Cutters Having Helical Type Sharpening and Helix Angles of 9 degrees thru 35 degrees for cutting helical gears (continued)

PD Nominal	Hole Nominal	C bore Minimum	Web W	Normal Diametral Pitch	Thickness B	Nominal Tooth Length L
2½	1	1½	¼	8 up to 10	1	9/16
		1 5/8	¼	10 up to 17	7/8	½
		1¾	3/16	17 up to 25	¾	7/16
		1 7/8	3/16	25 up to 41	5/8	3/8
3	1¼	2	5/16	5 up to 10	1 1/8	5/8
			¼	10 up to 17	1	5/8
				17 up to 25	7/8	½
		2¼	¼	25 up to 41	¾	3/8
3½	1¼	2	5/16	4 up to 5	1¼	5/8
		2⅛	5/16	5 up to 7	1⅛	5/8
	1¼ Standard 1¾ Optional	2 5/16	5/16	7 up to 10	1⅛	5/8
		2½	5/16	10 up to 17	1	5/8
		2½	5/16	17 up to 25	7/8	½
		2¾	¼	25 up to 41	¾	3/8
4	1¼ Standard 1¾ Optional	2 5/16	5/16	3 up to 5	1¼	5/8
		2½	5/16	5 up to 7	1⅛	5/8
		2¾	5/16	7 up to 10	1⅛	5/8
		3	5/16	10 up to 17	1	5/8
				17 up to 25	7/8	½
4½	1¼ Standard 1¾ Optional	2¾	5/16	3 up to 5	1¼	5/8
		3	5/16	5 up to 7	1⅛	5/8
		3¼	5/16	7 up to 10	1⅛	5/8
		3½	5/16	10 up to 17	1	5/8
				17 up to 25	7/8	½
5	1¾ Standard 1¼ Optional	3 1/16	7/16	3 up to 4	1 5/8	7/8
				4 up to 5	1½	7/8
		3 5/16	7/16	5 up to 7	1½	7/8
		3 9/16	7/16	7 up to 10	1½	7/8
		3¾	3/8	10 up to 17	1¼	11/16
		4	3/8	17 up to 25	1	9/16
5½	1¾ Standard 1¼ Optional	3 5/16	7/16	3 up to 4	1 5/8	7/8
		3 9/16	7/16	4 up to 5	1½	7/8
		3¾	7/16	5 up to 7	1½	7/8
		4	7/16	7 up to 10	1½	7/8
		4¼	3/8	10 up to 17	1¼	11/16
		4½	3/8	17 up to 25	1	9/16

All dimensions given in inches.

(continued)

Copyright ASME International
Provided by IHS under license with ASME
No reproduction or networking permitted without license from IHS
Not for Resale

Table 13. Sizes and Dimensions of Ground Disk Type Finishing Gear Shaper Cutters Having Helical Type Sharpening and Helix Angles of 9 degrees thru 35 degrees for cutting helical gears (continued)

PD Nominal	Hole Nominal	C bore Minimum	Web W	Normal Diametral Pitch	Thickness B	Nominal Tooth Length L
6	1¾	3¾	½	3 up to 4	1¾	1
		4	½	4 up to 5	1¾	1
		4	½	5 up to 7	1⅝	1
		4¼	½	7 up to 10	1⅝	1
		4½	½	10 up to 17	1½	13/16
6½	1¾	4¼	½	3 up to 4	1¾	1
		4½	½	4 up to 5	1¾	1
		4½	½	5 up to 7	1⅝	1
		4¾	½	7 up to 10	1⅝	1
		5	½	10 up to 17	1½	13/16
7	1¾	4½	½	3 up to 4	1¾	1
		4¾	½	4 up to 5	1¾	1
		5	½	5 up to 7	1⅝	1
		5¼	½	7 up to 10	1⅝	1
		5½	½	10 up to 17	1½	13/16
8†	4	5⅜	¾	3 up to 4	2¼	1¼
		5¾	¾	4 up to 7	2¼	1¼
		6	¾	7 up to 10	2¼	1¼
		6¼	¾	10 up to 17	2	1

All dimensions given in inches.

† 8 inch P. D. cutters have unaligned 5/8 × 5/32 keyway in the back face.

Copyright ASME International
Provided by IHS under license with ASME
No reproduction or networking permitted without license from IHS
Not for Resale

USA STANDARD

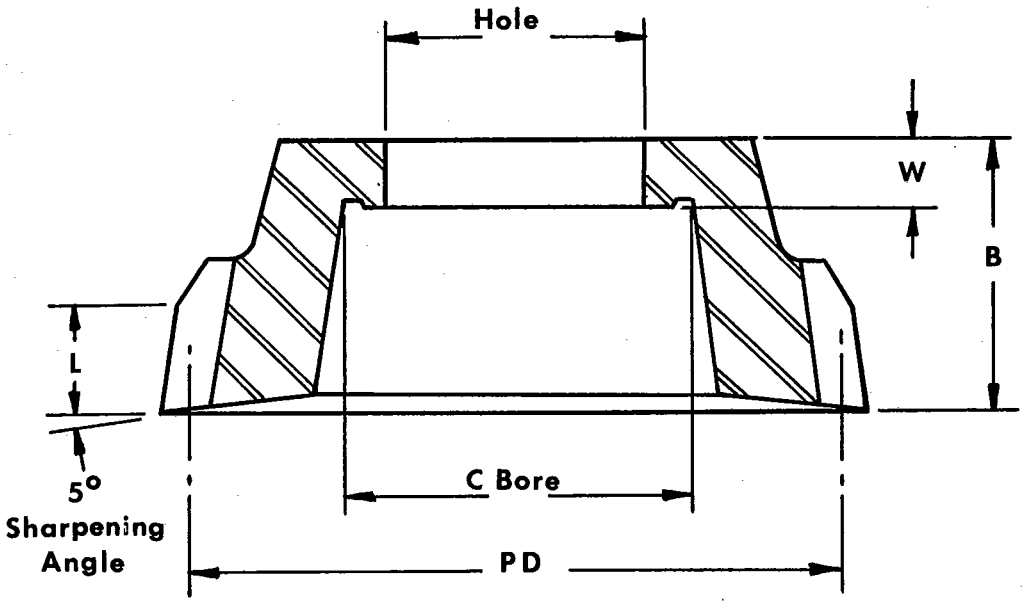

The circular sharpening shown is standard for all spur cutters and for all helical cutters which have helix angles less than 9 degrees, and for those of 9 thru 35 degrees helix angle which are:

1) Over 41 NDP with pitch diameters thru 3½ in.
2) Over 25 NDP with pitch diameters over 3½ in. thru 5½ in.
3) Over 17 NDP with pitch diameters over 5½ in.

Table 14. Sizes and Dimensions of Ground Deep Counterbore Type Finishing Gear Shaper Cutters (For Cutting Spur Gears and For Cutting Helical Gears Where the Helical Cutters Have a Circular Type Sharpening)

PD Nominal	Hole Nominal	C bore Minimum	Web W	Normal Diametral Pitch	Thickness B	Nominal Tooth Length L
1¼	½	¾	¼	10/20, 12/24, 14/18	1	½
				15/20, 16/21, 16/32		
				14, 15 & 16 AGMA Stub		
				17 up to 25	⅞	7/16
			3/16	25 up to 41	¾	⅜
				41 up to 65	¾	5/16
				65 up to 101	¾	¼
				101 up to 129	¾	7/32
1½	½	¾	¼	5/10, 6/12, 8/16, 9/11	1	9/16
				8 & 9 AGMA Stub		
				10 up to 17	1	½
				17 up to 25	⅞	7/16
		⅞	3/16	25 up to 41	¾	⅜
				41 up to 65	¾	5/16
				65 up to 101	¾	¼
				101 up to 129	¾	7/32

All dimensions given in inches.

(continued)

Copyright ASME International
Provided by IHS under license with ASME
No reproduction or networking permitted without license from IHS
Not for Resale

Table 14. Sizes and Dimensions of Ground Deep Counterbore Type Finishing Gear Shaper Cutters (For Cutting Spur Gears and For Cutting Helical Gears Where the Helical Cutters Have a Circular Type Sharpening) (Cont.)

PD Nominal	Hole Nominal	C bore Minimum	Web W	Normal Diametral Pitch	Thickness B	Nominal Tooth Length L
1¾	½	¾	¼	8 up to 10 4/8, 6/8 & 7/9 7 AGMA Stub	1	9/16
		⅞	¼	5/10, 6/12, 8/16, 9/11 8 & 9 AGMA Stub	1	9/16
				10 up to 17	1	½
		1	¼	17 up to 25	⅞	7/16
		1⅛	3/16	25 up to 41	¾	⅜
				41 up to 65	¾	5/16
				65 up to 101	¾	¼
				101 up to 129	¾	7/32
2	¾	1	¼	8 up to 10 4/8, 6/8 & 7/9 7 AGMA Stub	1	9/16
		1⅛	¼	5/10, 6/12, 8/16, 9/11 8 & 9 AGMA Stub	1	9/16
				10 up to 17	1	½
		1¼	¼	17 up to 25	⅞	7/16
		1⅜	3/16	25 up to 41	¾	⅜
				41 up to 65	¾	5/16
				65 up to 101	¾	¼
2½	1	1½	¼	8 up to 10 4/8, 6/8 & 7/9 7 AGMA Stub	1	9/16
		1⅝	¼	5/10, 6/12, 8/16, 9/11 8 & 9 AGMA Stub	1	9/16
				10 up to 17	1	½
		1¾	¼	17 up to 25	⅞	7/16
		1⅞	3/16	25 up to 41	¾	⅜
				41 up to 65	¾	5/16
				65 up to 101	¾	¼
3	1¼	2	⅜	2.5/5, 4/8, 5/7, 5/10 6/8, 6/12, 8/16, 9/11 4, 5 & 6 AGMA Stub 7, 8 & 9 AGMA Stub 5 up to 17	1½	⅝
				17 up to 25	1½	½
		2	5/16	25 up to 41	1¼	⅜
				41 up to 65	1¼	5/16

All dimensions given in inches.

(continued)

Copyright ASME International
Provided by IHS under license with ASME
No reproduction or networking permitted without license from IHS
Not for Resale

USA STANDARD

Table 14. Sizes and Dimensions of Ground Deep Counterbore Type Finishing Gear Shaper Cutters (For Cutting Spur Gears and For Cutting Helical Gears Where the Helical Cutters Have a Circular Type Sharpening) (Cont.)

PD Nominal	Hole Nominal	C bore Minimum	Web W	Normal Diametral Pitch	Thickness B	Nominal Tooth Length L
3½	1¼	2	3/8	2.5/5, 3/4, 3/6 3.5, 4 & 5 AGMA Stub 4 up to 7	1½	5/8
	1¼ Standard	2 5/16	3/8	4/8, 5/7, 5/10, 6/8 6/12, 7/9, 8/16, 9/11 6, 7, 8 & 9 AGMA Stub 7 up to 17	1½	5/8
	1¾ Optional	2½	3/8	17 up to 25	1½	½
		2½	5/16	25 up to 41	1¼	3/8
				41 up to 49	1¼	5/16
4	1¼ Standard	2 5/16	3/8	¾ 2.5, 3 & 3.5 AGMA Stub 3 up to 5	1½	5/8
		2½	3/8	2.5/5, 3/6 4 & 5 AGMA Stub 5 up to 7	1½	5/8
	1¾ Optional	2¾	3/8	4/8, 5/7, 5/10, 6/8 6/12, 7/9, 8/16, 9/11 6, 7, 8 & 9 AGMA Stub 7 up to 17	1½	5/8
		3	3/8	17 up to 25	1½	½
		3	5/16	25 up to 41	1¼	3/8
4½	1¼ Standard	2½	3/8	2.5 & 3 AGMA Stub 3 up to 4	1½	5/8
	1¾ Optional	2¾	3/8	¾ 3.5 AGMA Stub 4 up to 5	1½	5/8
	1¼ Standard	3	3/8	4 & 5 AGMA Stub 5 up to 7	1½	5/8
	1¾ Optional	3¼	3/8	2.5/5, 3/6, 4/8, 5/7, 5/10, 6/8, 6/12, 7/9, 8/16, 9/11, 6, 7, 8 & 9 AGMA Stub	1½	5/8
		3½	3/8	17 up to 25		
		3½	5/16	25 up to 41	1¼	3/8
5	1¾ Standard	3 1/16	7/16	2.5/5, 3/4, 3/6 2.5, 3, 3.5, 4 & 5 AGMA Stub 3 up to 7	2⅛	7/8
		3 5/16	7/16	4/8, 5/7, 5/10 6/8, 6/12 6 AGMA Stub 7 up to 10	2⅛	7/8
	1¼ Optional	3 9/16	7/16	10 up to 17	1⅞	11/16
				17 up to 25	1⅞	9/16
				25 up to 41	1⅞	7/16

All dimensions given in inches.

(continued)

Copyright ASME International
Provided by IHS under license with ASME
No reproduction or networking permitted without license from IHS
Not for Resale

GEAR SHAPER CUTTERS

Table 14. Sizes and Dimensions of Ground Deep Counterbore Type Finishing Gear Shaper Cutters (For Cutting Spur Gears and For Cutting Helical Gears Where the Helical Cutters Have a Circular Type Sharpening) (Cont.)

PD Nominal	Hole Nominal	C bore Minimum	Web W	Normal Diametral Pitch	Thickness B	Nominal Tooth Length L
5½	1¾ Standard 1¼ Optional	3 1/16	7/16	2 & 2.25 AGMA Stub 2.5 up to 3	2⅛	⅞
		3 5/16	7/16	¾ 2.5, 3 & 3.5 AGMA Stub 3 up to 5	2⅛	⅞
		3 9/16	7/16	2.5/5, 3/6, 4/8, 5/7 5/10, 6/8, 6/12 4, 5 & 6 AGMA Stub 5 up to 10	2⅛	⅞
		4	7/16	10 up to 17	1⅞	11/16
				17 up to 25	1⅞	9/16
6	1¾	3 1/16	½	2 up to 2.5	2¼	1
		3 5/16	½	2 & 2.25 AGMA Stub 2.5 up to 3		
		3 9/16	½	2.5 & 3 AGMA Stub 3 up to 4		
		3¾	½	¾ 3.5 AGMA Stub 4 up to 5		
		4	½	2.5/5, 3/6, 4/8, 5/7 5/10, 6/8, 6/12 4, 5 & 6 AGMA Stub 5 up to 10		
		4¼	½	10 up to 17	2¼	13/16
		4½	½	17 up to 25	2	⅝
6½	1¾	3 9/16	½	1.75 AGMA Stub 2 up to 2.5	2¼	1
		3¾	½	2 & 2.25 AGMA Stub 2.5 up to 3		
		4	½	2.5 & 3 AGMA Stub 3 up to 4		
		4¼	½	¾ 3.5 AGMA Stub 4 up to 5		
		4½	½	2.5/5, 3/6, 4/8, 5/7 5/10, 6/8, 6/12 4.5 & 6 AGMA Stub 5 up to 10		
		4¾	½	10 up to 17	2¼	13/16
		5	½	17 up to 25	2	⅝

All dimensions given in inches.

(continued)

Copyright ASME International
Provided by IHS under license with ASME
No reproduction or networking permitted without license from IHS
Not for Resale

USA STANDARD

Table 14. Sizes and Dimensions of Ground Deep Counterbore Type Finishing Gear Shaper Cutters (For Cutting Spur Gears and For Cutting Helical Gears Where the Helical Cutters Have a Circular Type Sharpening) (Cont.)

PD Nominal	Hole Nominal	C bore Minimum	Web W	Normal Diametral Pitch	Thickness B	Nominal Tooth Length L
7	1¾	4	½	1.75 AGMA Stub 2 up to 2.5	2¼	1
		4¼	½	2 & 2.25 AGMA Stub 2.5 up to 3		
		4½	½	2.5 & 3 AGMA Stub 3 up to 4		
		4¾	½	¾ 3.5 AGMA Stub 4 up to 5		
		5	½	2.5/5, 3/6, 4/8, 5/7 5/10, 6/8, 6/12 4, 5 & 6 AGMA Stub 5 up to 10		
		5¼	½	10 up to 17	2¼	13/16
		5½	½	17 up to 25	2	⅝
8†	4	5⅜	¾	¾ 2.5, 3 & 3.5 AGMA Stub 3 up to 5	2⅞	1¼
		5¾	¾	2.5/5, 3/6 4 & 5 AGMA Stub 5 up to 7		
		6	¾	4/8, 5/7, 5/10 6/8, 6/12 6 AGMA Stub 7 up to 10		
		6¼	¾	10 up to 17	2½	1
		6¼	¾	17 up to 20	2½	¾
8½ †	4	5⅜	¾	1.75, 2 & 2.25 AGMA Stub 2 up to 3	2⅞	1¼

All dimensions given in inches.

† 8 & 8½ P D Cutters have a ⅝ × 5/32 unaligned keyway in the back face.

Copyright ASME International
Provided by IHS under license with ASME
No reproduction or networking permitted without license from IHS
Not for Resale

GEAR SHAPER CUTTERS

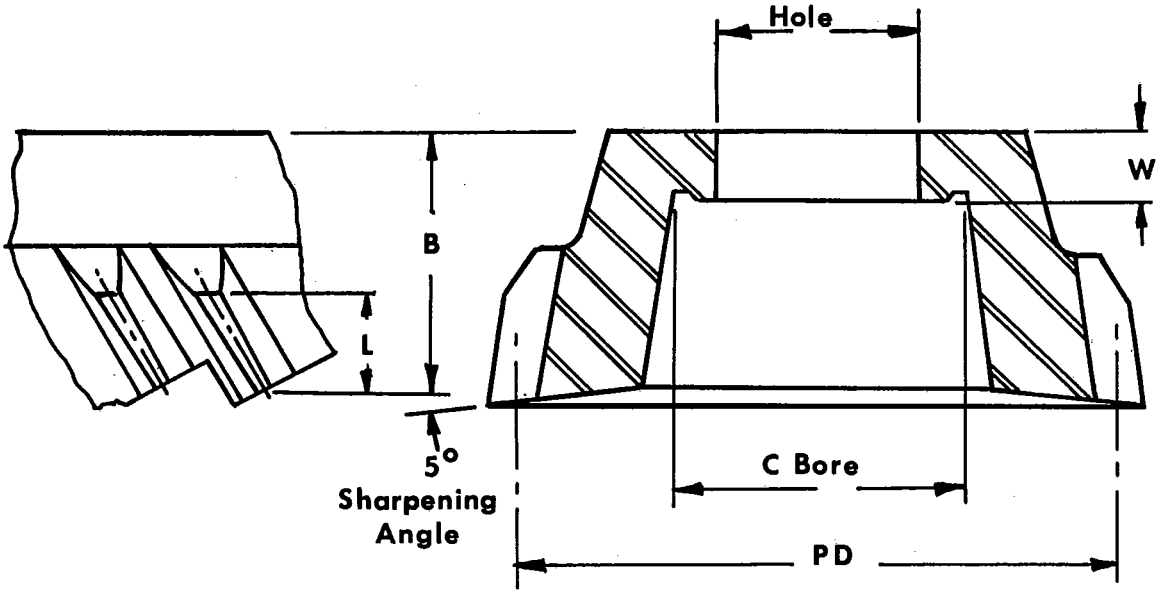

The helical sharpening shown is standard for helical cutters which are:

1) 41 NDP and coarser with pitch diameters thru 3½ in. or

2) 25 NDP and coarser with pitch diameters over 3½ in. and thru 5½ in.

3) 17 NDP and coarser with pitch diameters over 5½ in.

For helical cutters with less than 9 degrees helix angle and of finer pitch for a given diameter than shown above, see Table 14 for spur and helical cutters with circular type sharpening.

Table 15. Sizes and Dimensions of Ground Deep Counterbore Type Finishing Gear Shaper Cutters Having Helical Type Sharpening and Helix Angles of 9 degrees thru 35 degrees for Cutting Helical Gears

PD Nominal	Hole Nominal	C bore Minimum	Web W	Nominal Diametral Pitch	Thickness B	Nominal Tooth Length L
1¼	½	¾	¼	17 up to 25	⅞	7/16
			3/16	25 up to 41	¾	⅜
1½	½	¾	¼	10 up to 17	1	½
				17 up to 25	⅞	7/16
		⅞	3/16	25 up to 41	¾	⅜
1¾	½	¾	¼	8 up to 10	1	9/16
		⅞	¼	10 up to 17	1	½
		1	¼	17 up to 25	⅞	7/16
		1⅛	3/16	25 up to 41	¾	⅜
2	¾	1	¼	8 up to 10	1	9/16
		1⅛	¼	10 up to 17	1	½
		1¼	¼	17 up to 25	⅞	7/16
		1⅜	3/16	25 up to 41	¾	⅜

All dimensions given in inches.

(continued)

Copyright ASME International
Provided by IHS under license with ASME
No reproduction or networking permitted without license from IHS
Not for Resale

USA STANDARD

Table 15. Sizes and Dimensions of Ground Deep Counterbore Type Finishing Gear Shaper Cutters Having Helical Type Sharpening and Helix Angles of 9 degrees thru 35 degrees for Cutting Helical Gears (Cont.)

PD Nominal	Hole Nominal	C bore Minimum	Web W	Nominal Diametral Pitch	Thickness B	Nominal Tooth Length L
2½	1	1½	¼	8 up to 10	1	9/16
		1⅝	¼	10 up to 17	1	½
		1¾	¼	17 up to 25	⅞	7/16
		1⅞	3/16	25 up to 41	¾	⅜
3	1¼	2	⅜	5 up to 17	1½	⅝
				17 up to 25	1½	½
			5/16	25 up to 41	1¼	⅜
3½	1¼	2	⅜	4 up to 7	1½	⅝
	1¼ Standard	2 5/16	⅜	7 up to 17		
	1¾ Optional	2½	⅜	17 up to 25	1½	½
			5/16	25 up to 41	1¼	⅜
4	1¼ Standard	2 5/16	⅜	3 up to 5	1½	⅝
		2½	⅜	5 up to 7		
	1¾ Optional	2¾	⅜	7 up to 17		
		3	⅜	17 up to 25	1½	½
4½	1¼ Standard	2½	⅜	3 up to 4	1½	⅝
		2¾	⅜	4 up to 5		
		3	⅜	5 up to 7		
	1¾ Optional	3¼	⅜	7 up to 17		
		3½	⅜	17 up to 25	1½	½
5	1¾ Standard	3 1/16	7/16	3 up to 7	2⅛	⅞
		3 5/16	7/16	7 up to 10		
	1¼ Optional	3 9/16	7/16	10 up to 17	1⅞	11/16
				17 up to 25	1⅞	9/16
5½	1¾ Standard	3 5/16	7/16	3 up to 5	2⅛	⅞
		3 9/16	7/16	5 up to 10		
	1¼ Optional	4	7/16	10 up to 17	1⅞	11/16
				17 up to 25	1⅞	9/16
6	1¾	3 9/16	½	3 up to 4	2¼	1
		3¾	½	4 up to 5		
		4	½	5 up to 10		
		4¼	½	10 up to 17	2¼	13/16
6½	1¾	4	½	3 up to 4	2¼	1
		4¼	½	4 up to 5		
		4½	½	5 up to 10		
		4¾	½	10 up to 17	2¼	13/16

All dimensions given in inches.

(continued)

Copyright ASME International
Provided by IHS under license with ASME
No reproduction or networking permitted without license from IHS
Not for Resale

Table 15. Sizes and Dimensions of Ground Deep Counterbore Type Finishing Gear Shaper Cutters Having Helical Type Sharpening and Helix Angles of 9 degrees thru 35 degrees for Cutting Helical Gears (Cont.)

PD Nominal	Hole Nominal	C bore Minimum	Web W	Nominal Diametral Pitch	Thickness B	Nominal Tooth Length L
7	1 3/4	4 1/2	1/2	3 up to 4	2 1/4	1
		4 3/4	1/2	4 up to 5		
		5	1/2	5 up to 10		
		5 1/4	1/2	10 up to 17	2 1/4	13/16
8†	4	5 3/8	3/4	3 up to 5	2 7/8	1 1/4
		5 3/4	3/4	5 up to 7		
		6	3/4	7 up to 10		
		6 1/4	3/4	10 up to 17	2 1/2	1

All dimensions given in inches.

†These cutters have 5/8 × 5/32 unaligned keyway in back face.

Copyright ASME International
Provided by IHS under license with ASME
No reproduction or networking permitted without license from IHS
Not for Resale

USA STANDARDS FOR
MACHINE TOOLS AND CUTTING TOOLS

TITLE OF STANDARD	
T-Slots, Their Bolts, Nuts, Tongues, and Cutters	B5.1–1949
Milling Cutters	B5.3–1960
Rotating Air Cylinders and Adapters	B5.5–1959
Jig Bushings	B5.6–1962
Circular and Dovetailed Forming Tool Blanks	B5.7–1954
Chucks and Chuck Jaws	B5.8–1954 (Reaffirmed 1959)
Spindle Noses for Tool Room Lathes, Engine Lathes, Turret Lathes, and Automatic Lathes	B5.9–1967
Machine Tapers	B5.10–1963
Spindle Noses and Adjustable Adapters for Multiple Spindle Drilling Heads	B5.11–1964
Involute Splines, Serrations and Inspection	B5.15–1960
Accuracy of Engine and Tool Room Lathes	B5.16–1952
Markings for Identifying Grinding Wheels and Other Bonded Abrasives	B5.17–1958
Spindle Noses and Arbors for Milling Machines	B5.18–1960
Life Tests of Single-Point Tools	B5.19–1946 (Reaffirmed 1953)
Machine Pins	B5.20–1958
Die Sets	B5.25–1968
Drill Drivers	B5.27–1959
Mounting Dimensions of Lubricating and Coolant Pumps for Machine Tools	B5.28–1958
Designation and Working Ranges of Grinding Machines	B5.32 & 33–1953
Life Tests for Single-Point Tools of Sintered Carbide	B5.34–1956
Machine Mounting Specifications for Abrasive Discs and Plate Mounted Wheels	B5.35–1969
Driving and Spindle Ends for Portable Air and Electric Tools	B5.38–1958
Spindle Flanges for Precision Boring Machines	B5.39–1961
Spindle Noses and Tool Shanks for Horizontal Boring Machines	B5.40–1962
Blanks and Semi-Finished Blanks for Solid Carbide Taps	B94.1–1964
Reamers	B94.2–1964
Straight Cut-Off Blades for Lathes and Screw Machines	B94.3–1965
Identification System for Throw Away Inserts for Cutting Tools	B94.4–1965
Carbide Blanks and Cutting Tools	B94.5–1966
Knurling	B94.6–1966
Hobs	B94.7–1966
Inserted Blade Milling Cutter Bodies	(Rev. B5.23–1958) B94.8–1967
Taps Cut and Ground Threads	(Rev. B5.4–1959) B94.9–1967
High-Speed Steel and Cast Nonferrous Single-Point Tools and Tool Holders	(Rev. B5.29–1959) B94.10–1968
Twist Drills	(Rev. B5.12–1958) B94.11–1967
Carbide-Tipped Masonry Drills, and Blanks for Carbide-Tipped Masonry Drills	(Rev. B82.1–1962) B94.12–1968
Blanks for Carbide Burs	(Rev. B83.1–1962) B94.13–1968
Punches-Basic Head Type	B94.14–1968
Retainers – Basic Ball-Lock Punch and Die Button, Light and Heavy Duty	B94.16–1968
Gages – Functional, Ball-Lock Punch and Die Button, Light and Heavy Duty	B94.17–1968
Punches – Basic Ball-Lock Light and Heavy Duty	B94.18–1968
Milling Cutters and End Mills	(Rev. B5.3–1960) B94.19–1968
Specifications for Carbide Blanks for Twist Drills, Reamers, End Mills, and Random Rod (Rev. B85.1–1963)	B94.20–1968
Gear Shaper Cutters	B94.21–1968

Binders for holding standards are available.

A complete list of USA Standards published by The American Society of Mechanical Engineers obtainable upon request

Copyright ASME International
Provided by IHS under license with ASME
No reproduction or networking permitted without license from IHS
Not for Resale