ASME B94.2 95 ■ 0759670 0564546 299 ■

ASME B94.2-1995

(REVISION OF ANSI B94.2-1983)

REAMERS

AN AMERICAN NATIONAL STANDARD

The American Society of
Mechanical Engineers

Copyright ASME International
Provided by IHS under license with ASME
No reproduction or networking permitted without license from IHS

Not for Resale

AN AMERICAN NATIONAL STANDARD

REAMERS

ASME B94.2-1995

(REVISION OF ANSI B94.2-1983)

The American Society of
Mechanical Engineers

345 East 47 th Street, New York, N.Y.

Copyright ASME International
Provided by IHS under license with ASME
No reproduction or networking permitted without license from IHS

Not for Resale

Date of Issuance: July 31, 1995

This Standard will be revised when the Society approves the issuance of a new edition. There will be no addenda or written interpretations of the requirements of this Standard issued to this edition.

ASME is the registered trademark of the American Society of Mechanical Engineers.

This code or standard was developed under procedures accredited as meeting the criteria for American National Standards. The Consensus Committee that approved the code or standard was balanced to assure that individuals from competent and concerned interests have had an opportunity to participate. The proposed code or standard was made available for public review and comment which provides an opportunity for additional public input from industry, academia, regulatory agencies, and the public-at-large.

ASME does not "approve," "rate," or "endorse" any item, construction, proprietary device, or activity.

ASME does not take any position with respect to the validity of any patent rights asserted in connection with any items mentioned in this document, and does not undertake to insure anyone utilizing a standard against liability for infringement of any applicable Letters Patent, nor assume any such liability. Users of a code or standard are expressly advised that determination of the validity of any such patent rights, and the risk of infringement of such rights, is entirely their own responsibility.

Participation by federal agency representative(s) or person(s) affiliated with industry is not to be interpreted as government or industry endorsement of this code or standard.

ASME accepts responsibility for only those interpretations issued in accordance with governing ASME procedures and policies which preclude the issuance of interpretations by individual volunteers.

No part of this document may be reproduced in any form,
in an electronic retrieval system or otherwise,
without the prior written permission of the publisher.

Copyright © 1995 by
THE AMERICAN SOCIETY OF MECHANICAL ENGINEERS
All Rights Reserved
Printed in U.S.A.

Copyright ASME International
Provided by IHS under license with ASME
No reproduction or networking permitted without license from IHS

Not for Resale

FOREWORD

This Standard for reamers was formulated by Technical Committee 20 of the B5 Sectional Committee on the Standardization of Small Tools and Machine Tool Elements. The organization of Technical Committee 20 on the Standardization of Reamers in March 1937 was prompted by a recognized need for unifying the practice in this field.

The proposal submitted by the committee was approved by ASA and designated ASA B5.14-1941. The Standard ASA B5.14-1941 was revised and approved in 1949, and subsequently reaffirmed in 1954. A sufficient number of requests for revision resulted in reactivation of the committee in 1957. The revision was approved by the sectional committee and the sponsors, and the required ASA approval and designation were granted April 9, 1959.

In November 1961, the ASA Mechanical Standards Board approved the request of the B5 Sectional Committee sponsors that a separate project be initiated under ASA Procedure on the subject of Cutting Tools. As a result of this action, a new project was initiated on Cutting Tools, and ASME accepted sponsorship. The committee was designated B94 Cutting Tools, and the activity on cutting tools was removed from the B5 Sectional Committee. The designation numbers of the technical committees were changed to conform with the new sectional committee organization. B5 Technical Committee 20 was changed to B94 Technical Committee 9.

Requests for revision to B5.14-1959 to cover additions, deletions, and clarification of the Standard necessitated reactivation of the committee. The revised draft was prepared and distributed to the members for review and comment. A meeting of TC-9 was held in November 1962, and the draft was subsequently approved by the committee.

The revised Standard was submitted to Sectional Committee B94 on May 27, 1964. Following approval by the Sectional Committee and the sponsor, the Standard was approved by ASA on December 21, 1964 and designated as ASA B94.2-1964.

In 1970, Technical Committee 9 revised the 1964 issue of B94.2, incorporating revisions and additions reflecting current industry practice. The revision was presented to American National Standards Committee B94 and to the B94 secretariat for approval. Thereafter, the revision was approved by ANSI on September 28, 1971.

In accordance with ANSI procedures, a further revision was undertaken in 1976 in order to update the Standard. This revision was approved by ANSI on May 4, 1977.

Since then, ANSI also approved a 1983 revision, on September 30 of that year, as well as the present one, on April 14, 1995.

Copyright ASME International
Provided by IHS under license with ASME
No reproduction or networking permitted without license from IHS
Not for Resale

ASME STANDARDS COMMITTEE B94
Standardization of Cutting Tools, Holders, Drivers, and Bushings

(The following is the roster of the Committee at the time of approval of this Standard.)

OFFICERS

C. W. Preuss, *Chair*
K. I. Baron, *Secretary*

COMMITTEE PERSONNEL

K. I. Baron, ASME, New York, New York
A. M. Bratkovich, Association for Manufacturing Technology, McLean, Virginia
M. E. Merchant, Institute of Advanced Manufacturing Science, Cincinnati, Ohio
C. W. Preuss, Kingsford Broach and Tool, Inc., Westlake, Ohio

PERSONNEL OF TECHNICAL COMMITTEE 9 — REAMERS

P. Bourg, Tivoly, Inc., Derby Line, Vermont
P. Field, Michigan Drill Corp., Miami, Florida
M. N. Jarvis II, Jarvis Cutting Tools, Inc., Rochester, New Hampshire
R. E. Moring, Greenfield Industries, Augusta, Georgia
C. W. Preuss, Kingsford Broach and Tool, Inc., Westlake, Ohio

Copyright ASME International
Provided by IHS under license with ASME
No reproduction or networking permitted without license from IHS
Not for Resale

CONTENTS

Foreword iii
Standards Committee Roster v

1 Scope 1
2 Nomenclature and Definitions 1
3 Classifications Based on Construction 3
4 Classifications Based on Method of Holding or Driving 3
5 Direction of Rotation and Helix 3

Figure
1 Illustrations of Terms Applying to Reamers 5

Tables
1 Expansion Hand Reamers With Straight Flutes and Squared Shank — Carbon Steel 6
Tolerances for Table 1 7
2 Expansion Hand Reamers With Left-Hand Helical Flutes and Squared Shank — Carbon Steel 8
Tolerances for Table 2 9
3 Hand Reamers With Straight Flutes and Squared Shank — High-Speed Steel 10
Tolerances for Table 3 11
4 Hand Reamers With Left-Hand Helical Flutes and Squared Shank — High-Speed Steel 12
Tolerances for Table 4 13
5 Taper Shank Jobbers Reamers With Straight Flutes — High-Speed Steel 14
Tolerances for Table 5 15
6 Driving Slots and Lugs for Shell Reamers and Shell Reamer Arbors 16
7 Shell Reamers With Straight Flutes — High-Speed Steel 17
Tolerances for Table 7 18
8 Shell Reamers With Left-Hand Helical Flutes — High-Speed Steel 19
Tolerances for Table 8 20
9 Arbors With Straight Shanks for Shell Reamers 21
Tolerances for Table 9 21
10 Arbors With Taper Shanks for Shell Reamers 22
Tolerances for Table 10 22
11 Expansion Chucking Reamers With Straight Flutes and Straight Shank — High-Speed Steel 23
Tolerances for Table 11 24

Copyright ASME International
Provided by IHS under license with ASME
No reproduction or networking permitted without license from IHS
Not for Resale

12 Expansion Chucking Reamers With Straight Flutes and Taper Shank — High-Speed Steel 25
Tolerances for Table 12 26
13 Straight Shank Chucking Reamers With Straight Flutes — High-Speed Steel, Fractional Sizes 27
Tolerances for Table 13 28
14 Straight Shank Chucking Reamers With Straight Flutes — High-Speed Steel, Wire Gage Sizes 29
Tolerances for Table 14 30
15 Straight Shank Chucking Reamers With Straight Flutes — High-Speed Steel, Letter Sizes 31
Tolerances for Table 15 32
16 Straight Shank Chucking Reamers With Straight Flutes — High-Speed Steel, Decimal Sizes 33
Tolerances for Table 16 33
17 Taper Shank Chucking Reamers With Straight Flutes — High-Speed Steel 34
Tolerances for Table 17 35
18 Straight Shank Chucking Reamers With Helical Flutes — Right- or Left-Hand Helix — Right-Hand Cut — High-Speed Steel 36
Tolerances for Table 18 37
19 Taper Shank Chucking Reamers With Helical Flutes — Right-Hand Helix — Right-Hand Cut — High-Speed Steel 38
Tolerances for Table 19 39
20 Straight Shank Rose Chucking Reamers With Straight Flutes — High-Speed Steel 40
Tolerances for Table 20 40
21 Stub Screw Machine Reamers With Helical Flutes — High-Speed Steel 41
Tolerances for Table 21 42
22 Morse Taper Finishing Reamers With Straight Flutes and Squared Shank — High-Speed Steel 43
Tolerances for Table 22 43
23 Morse Taper Reamers With Morse Taper Shank 44
Tolerances for Table 23 44
24 Taper Pin Reamers With Straight Flutes and Squared Shank — Carbon Steel, High-Speed Steel 45
Taper Pin Reamers With Left-Hand Spiral Flutes and Squared Shank — High-Speed Steel 45
Tolerances for Table 24 46
25 Taper Pin Reamers With High-Spiral Flutes — High-Speed Steel 47
Tolerances for Table 25 47
26 Die Maker's Reamers With High-Spiral Flutes — High-Speed Steel 48
Tolerances for Table 26 48
27 Taper Shank Bridge Reamers With Straight Flutes — High-Speed Steel 49
Tolerances for Table 27 49
28 Taper Shank Bridge Reamers With Helical Flutes — High-Speed Steel 50
Tolerances for Table 28 51
29 Taper Shank Car Reamers With Straight Flutes — High-Speed Steel 52
Tolerances for Table 29 52
30 Taper Shank Car Reamers With Helical Flutes — High-Speed Steel 53
Tolerances for Table 30 53
31 Taper Shank Structural Reamers With Three Helical Flutes — High-Speed Steel 54
Tolerances for Table 31 54

Copyright ASME International
Provided by IHS under license with ASME
No reproduction or networking permitted without license from IHS
Not for Resale

32 Straight Shank Center Reamers (Short Countersinks) — High-Speed Steel 55
Tolerances for Table 32 55
33 Straight Shank Machine Countersinks — High-Speed Steel 56
Tolerances for Table 33 56
34 Taper Pipe Reamers With Spiral Flutes and Squared Shank — High-Speed Steel 57
Tolerances for Table 34 58

Appendix

A Conversion Tables From Inch to Millimeter 59

Copyright ASME International
Provided by IHS under license with ASME
No reproduction or networking permitted without license from IHS
Not for Resale

ASME B94.2 95 ■ 0759670 0564554 365 ■

REAMERS

1 SCOPE

This Standard covers the American National Standard for Reamers — nomenclature, definitions, types, sizes, and tolerances.

2 NOMENCLATURE AND DEFINITIONS

reamer — a rotary cutting tool with one or more cutting elements used for enlarging to size and contour a previously formed hole. Its principal support during the cutting action is obtained from the workpiece. (See Fig. 1.)

actual size — the actual measured diameter of a reamer, usually slightly larger than the nominal size to allow for wear

angle of taper — the included angle of taper on a taper tool or taper shank

arbor hole — the central mounting hole in a shell reamer

axis — the imaginary straight line which forms the longitudinal centerline of a reamer, usually established by rotating the reamer between centers

back taper — a slight decrease in diameter, from front to back, in the flute length of reamers

bevel — an unrelieved angular surface of revolution (not to be confused with chamfer)

body — the fluted full diameter portion of a reamer, inclusive of the chamfer, starting taper, and bevel

chamfer — the angular cutting portion at the entering end of a reamer [see also *secondary (chamfer)*]

chamfer angle — the angle between the axis and the cutting edge of the chamfer measured in an axial plane at the cutting edge

chamfer length — the length of the chamfer measured parallel to the axis at the cutting edge

chamfer relief angle — see under *relief*

chamfer relief — see under *relief*

chip breakers — notches or grooves in the cutting edges of some taper reamers designed to break the continuity of the chips

circular land — see preferred term *margin*

clearance — the space created by the relief behind the cutting edge or margin of a reamer

core — the central portion of a reamer below the flutes which joins the lands

core diameter — the diameter at a given point along the axis of the largest circle which does not project into the flutes

cutter sweep — the section removed by the milling cutter or grinding wheel in entering or leaving a flute

cutting edge — the leading edge of the relieved land in the direction of rotation for cutting

cutting face — the leading side of the relieved land in the direction of rotation for cutting on which the chip impinges

external center — the pointed end of a reamer. The included angle varies with manufacturing practice.

flutes — longitudinal channels formed in the body of the reamer to provide cutting edges, permit passage of chips, and allow cutting fluid to reach the cutting edges

angular flute — a flute which forms a cutting face lying in a plane intersecting the reamer axis at an angle. It is unlike a helical flute in that it forms a cutting face which lies in a single plane.

helical flute — (sometimes called spiral flute) a flute which is formed in a helical path around the axis of a reamer

spiral flute (1) on a taper reamer, a flute of constant lead; or,
(2) in reference to a straight reamer, see preferred term *helical flute*.

straight flute — a flute which forms a cutting edge lying in an axial plane

flute length — the length of the flutes not including the cutter sweep

guide — a cylindrical portion following the flutes of a reamer to maintain alignment

heel — the trailing edge of the land in the direction of rotation for cutting

Copyright ASME International
Provided by IHS under license with ASME
No reproduction or networking permitted without license from IHS
Not for Resale

ASME B94.2 95 ■ 0759670 0564555 2T1 ■

helix angle — the angle which a helical cutting edge at a given point makes with an axial plane through the same point

hook — a concave condition of a cutting face. The rake of a hooked cutting face must be determined at a given point.

internal center — a 60 deg countersink with clearance at the bottom, in one or both ends of a tool, which establishes the tool axis

irregular spacing — a deliberate variation from uniform spacing of the reamer cutting edges

land — the section of the reamer between adjacent flutes

land width — the distance between the leading edge of the land and the heel measured at a right angle to the leading edge

lead of flute — the axial advance of a helical or spiral cutting edge in one turn around the reamer axis

length — the dimension of any reamer element measured parallel to the reamer axis

limits — the maximum and minimum values designated for a specific element

margin — the unrelieved part of the periphery of the land adjacent to the cutting edge

margin width — the distance between the cutting edge and the primary relief measured at a right angle to the cutting edge

neck — the section of reduced diameter connecting shank to body, or connecting other portions of the reamer

nominal size — the designated basic size of a reamer

overall length — the extreme length of the complete reamer from end to end, but not including external centers or expansion screws

periphery — the outside circumference of a reamer

pilot — a cylindrical portion preceding the entering end of the reamer body to maintain alignment

rake — the angular relationship between the cutting face, or a tangent to the cutting face at a given point and a given reference plane or line

axial rake — applies to angular (not helical or spiral) cutting faces. It is the angle between a plane containing the cutting face, or tangent to the cutting face at a given point, and the reamer axis.

helical rake — applies only to helical and spiral cutting faces (not angular). It is the angle between a plane, tangent to the cutting face at a given point on the cutting edge, and the reamer axis.

negative rake — describes a cutting face in rotation whose cutting edge lags the surface of the cutting face

positive rake — describes a cutting face in rotation whose cutting edge leads the surface of the cutting face

radial rake angle — the angle in a transverse plane between a straight cutting face and a radial line passing through the cutting edge

relief — the result of the removal of tool material behind or adjacent to the cutting edge to provide clearance and prevent rubbing (heel drag)

axial relief — the relief measured in the axial direction between a plane perpendicular to the axis and the relieved surface. It can be measured by the amount of indicator drop at a given radius in a given amount of angular rotation.

cam relief — the relief from the cutting edge to the heel of the land produced by a cam action

chamfer relief — the axial relief on the chamfer of the reamer

chamfer relief angle — the axial relief angle at the outer corner of the chamfer. It is measured by projection into a plane tangent to the periphery at the outer corner of the chamfer.

eccentric relief — a convex relieved surface behind the cutting edge

flat relief — a relieved surface behind the cutting edge which is essentially flat

primary relief — the relief immediately behind the cutting edge or margin. Properly called *relief*.

radial relief — relief in a radial direction measured in the plane of rotation. It can be measured by the amount of indicator drop at a given radius in a given amount of angular rotation.

secondary relief — an additional relief behind the primary relief

relief angle — the angle, measured in a transverse plane, between the relieved surface and a plane tangent to the periphery at the cutting edge

secondary chamfer — a slight relieved chamfer adjacent to and following the initial chamfer on a reamer

shank — the portion of the reamer by which it is held and driven

squared shank — a cylindrical shank having a driving square on the back end

starting radius — a relieved radius at the entering end of a reamer in place of a chamfer

starting taper — a slight relieved taper on the front end of a reamer

straight shank — a cylindrical shank

Copyright ASME International
Provided by IHS under license with ASME
No reproduction or networking permitted without license from IHS
Not for Resale

tang — the flatted end of a taper shank which fits a slot in the socket

taper per foot — the difference in diameter between two points 12 in. apart measured along the axis

taper shank — a shank made to fit a specific (conical) taper socket

3 CLASSIFICATIONS BASED ON CONSTRUCTION

solid reamers — those made of one piece of tool material

expansion reamers — those whose size may be increased by deflecting or bending segments of the reamer body

4 CLASSIFICATIONS BASED ON METHOD OF HOLDING OR DRIVING

hand reamers — those which are ordinarily used by hand. A driving square is provided at the end of the shank. The cutting end is provided with a starting taper for easy entry.

machine reamers — those having shanks suitable for mounting in machines

shell reamers — machine reamers mountable on arbors (called "shell reamer arbors") specifically designed for that purpose

5 DIRECTION OF ROTATION AND HELIX

The terms "right hand" and "left hand" are used to describe both direction of rotation and direction of flute helix or reamers.

(*a*) *Hand of Rotation (or Hand of Cut):*

right-hand rotation (or right-hand cut) — when viewed from the cutting end, the reamer must revolve counterclockwise to cut

left-hand rotation (or left-hand cut) — when viewed from the cutting end, the reamer must revolve clockwise to cut

(*b*) *Hand of Flute Helix:*

right-hand helix — when the flutes twist away from the observer in a clockwise direction when viewed from either end of the reamer

left-hand helix — when the flutes twist away from the observer in a counterclockwise direction when viewed from either end of the reamer

The standard reamers on the tables that follow are all right-hand rotation.

Copyright ASME International
Provided by IHS under license with ASME
No reproduction or networking permitted without license from IHS
Not for Resale

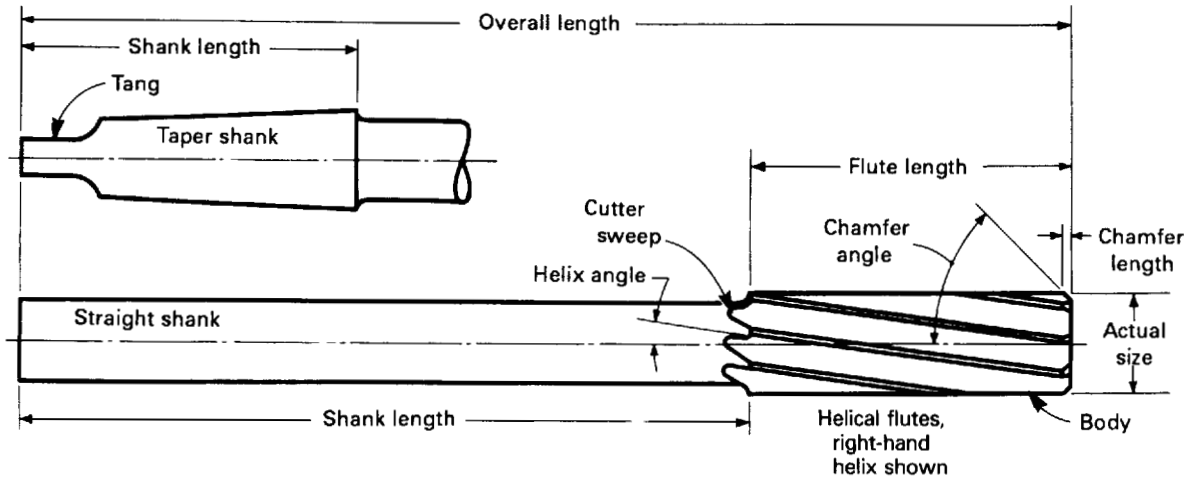

Chucking Reamer, Straight and Taper Shank

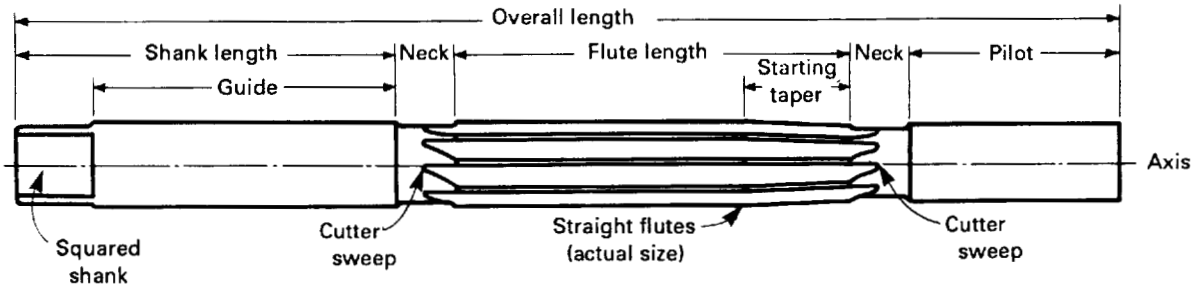

Hand Reamer, Pilot and Guide

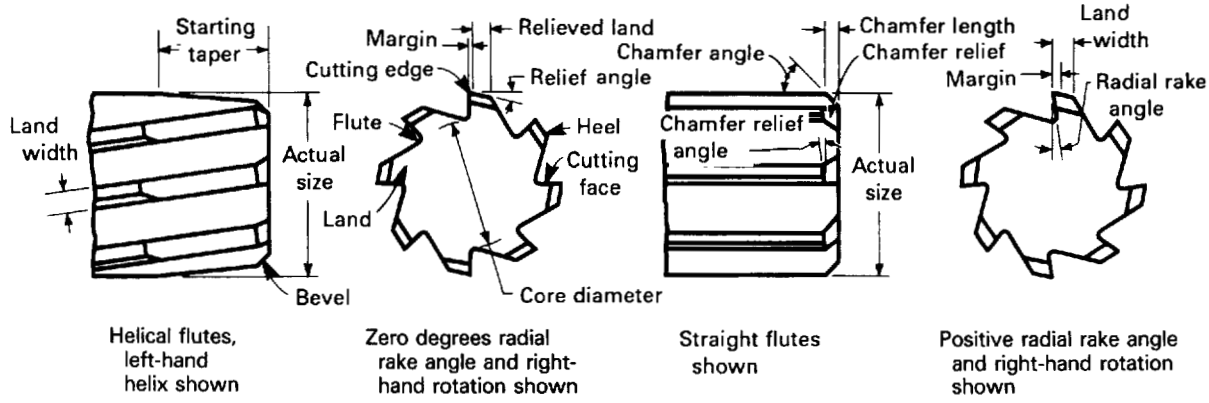

Hand Reamer **Machine Reamer**

FIG. 1 ILLUSTRATIONS OF TERMS APPLYING TO REAMERS

Copyright ASME International
Provided by IHS under license with ASME
No reproduction or networking permitted without license from IHS

Not for Resale

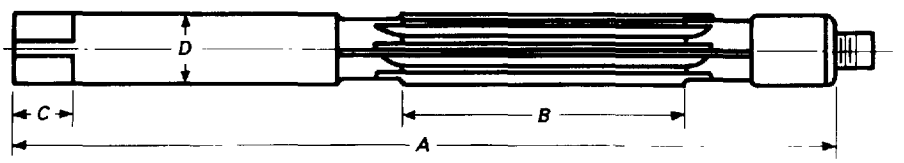

TABLE 1 EXPANSION HAND REAMERS WITH STRAIGHT FLUTES AND SQUARED SHANK — CARBON STEEL

Diameter of Reamer		Dimensions							
		Length Overall *A*		Length of Flute *B*		Length of Square *C*	Diameter of Shank *D*	Size of Square	Number of Flutes
Fractional	Decimal Equivalent	Min.	Max.	Min.	Max.				
1/4	0.2500	3 3/4	4 3/8	1 1/2	1 3/4	1/4	1/4	0.185	6 to 8 incl.
5/16	0.3125	4	4 3/8	1 1/2	1 7/8	5/16	5/16	0.235	6 to 8 incl.
3/8	0.3750	4 1/4	5 3/8	1 3/4	2	3/8	3/8	0.280	6 to 9 incl.
7/16	0.4375	4 1/2	5 3/8	1 3/4	2	7/16	7/16	0.330	6 to 9 incl.
1/2	0.5000	5	6 1/2	1 3/4	2 1/2	1/2	1/2	0.375	6 to 9 incl.
9/16	0.5625	5 3/8	6 1/2	1 7/8	2 1/2	9/16	9/16	0.420	6 to 9 incl.
5/8	0.6250	5 3/4	7	2 1/4	3	5/8	5/8	0.470	6 to 9 incl.
11/16	0.6875	6 1/4	7 5/8	2 1/2	3	11/16	11/16	0.515	6 to 10 incl.
3/4	0.7500	6 1/2	8	2 5/8	3 1/2	3/4	3/4	0.560	6 to 10 incl.
7/8	0.8750	7 1/2	9	3 1/8	4	7/8	7/8	0.655	8 to 10 incl.
1	1.0000	8 3/8	10	3 1/8	4 1/2	1	1	0.750	8 to 10 incl.
1 1/8	1.1250	9	10 1/2	3 1/2	4 3/4	1	1 1/8	0.845	8 to 12 incl.
1 1/4	1.2500	9 3/4	11	4 1/4	5	1	1 1/4	0.935	8 to 12 incl.

GENERAL NOTE: Dimensions are in inches.

Copyright ASME International
Provided by IHS under license with ASME
No reproduction or networking permitted without license from IHS
Not for Resale

TOLERANCES FOR TABLE 1

Element		Range	Direction	Tolerance
Length overall	(*A*)	1/4 to 1 incl. 1 1/8 to 1 1/4 incl.	Plus or minus Plus or minus	1/16 3/32
Length of flute	(*B*)	1/4 to 1 incl. 1 1/8 to 1 1/4 incl.	Plus or minus Plus or minus	1/16 3/32
Length of square	(*C*)	1/4 to 1 incl. 1 1/8 to 1 1/4 incl.	Plus or minus Plus or minus	1/32 1/16
Diameter of shank	(*D*)	1/4 to 1 incl. 1 1/8 to 1 1/4 incl.	Minus Minus	0.001 to 0.005 0.0015 to 0.006
Size of square		1/4 to 1/2 incl. 9/16 to 1 incl. 1 1/8 to 1 1/4 incl.	Minus Minus Minus	0.004 0.006 0.008

GENERAL NOTES:
(a) Dimensions are in inches.
(b) Expansion hand reamers are primarily designed for work where it is necessary to enlarge reamed holes by a few thousandths.
(c) The pilots and guides on these reamers are ground undersize for clearance.
(d) Number of flutes may vary in accordance with manufacturer's standard practice but must fall within the range specified in the table.
(e) The maximum expansion on these reamers is as follows:

1/4 to 7/16 incl., 0.006 in.
1/2 to 7/8 incl., 0.010 in.
1 to 1 1/4 incl., 0.012 in.

Copyright ASME International
Provided by IHS under license with ASME
No reproduction or networking permitted without license from IHS
Not for Resale

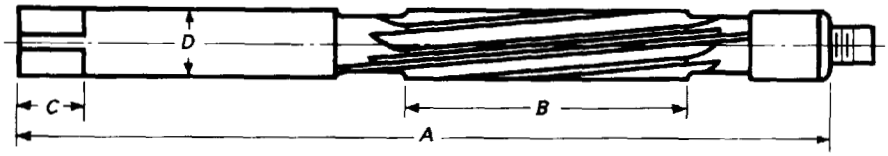

TABLE 2 EXPANSION HAND REAMERS WITH LEFT-HAND HELICAL FLUTES AND SQUARED SHANK — CARBON STEEL

Diameter of Reamer		Dimensions							
		Length Overall *A*		Length of Flute *B*		Length of Square *C*	Diameter of Shank *D*	Size of Square	Number of Flutes
Fractional	Decimal Equivalent	Min.	Max.	Min.	Max.				
1/4	0.2500	3 7/8	4 3/8	1 1/2	1 3/4	1/4	1/4	0.185	6 to 8 incl.
5/16	0.3125	4	4 3/8	1 1/2	1 3/4	5/16	5/16	0.235	6 to 8 incl.
3/8	0.3750	4 1/4	6 1/8	1 3/4	2	3/8	3/8	0.280	6 to 9 incl.
7/16	0.4375	4 1/2	6 1/4	1 3/4	2	7/16	7/16	0.330	6 to 9 incl.
1/2	0.5000	5	6 1/2	1 3/4	2 1/2	1/2	1/2	0.375	6 to 9 incl.
5/8	0.6250	6	8	2 1/4	3	5/8	5/8	0.470	6 to 9 incl.
3/4	0.7500	6 1/2	8 5/8	2 5/8	3 1/2	3/4	3/4	0.560	6 to 10 incl.
7/8	0.8750	7 1/2	9 3/8	3 1/8	4	7/8	7/8	0.655	6 to 10 incl.
1	1.0000	8 3/8	10 1/4	3 1/8	4 1/2	1	1	0.750	6 to 10 incl.
1 1/4	1.2500	9 3/4	11 3/8	4 1/4	5	1	1 1/4	0.935	8 to 12 incl.

GENERAL NOTE: Dimensions are in inches.

Copyright ASME International
Provided by IHS under license with ASME
No reproduction or networking permitted without license from IHS
Not for Resale

TOLERANCES FOR TABLE 2

Element		Range	Direction	Tolerance
Length overall	(*A*)	1/4 to 1 incl.	Plus or minus	1/16
		1 1/4	Plus or minus	3/32
Length of flute	(*B*)	1/4 to 1 incl.	Plus or minus	1/16
		1 1/4	Plus or minus	3/32
Length of square	(*C*)	1/4 to 1 incl.	Plus or minus	1/32
		1 1/4	Plus or minus	1/16
Diameter of shank	(*D*)	1/4 to 1 incl.	Minus	0.001 to 0.005
		1 1/4	Minus	0.0015 to 0.006
Size of square		1/4 to 1/2 incl.	Minus	0.004
		5/8 to 1 incl.	Minus	0.006
		1 1/4	Minus	0.008

GENERAL NOTES:
(a) Dimensions are in inches.
(b) Expansion hand reamers are primarily designed for work where it is necessary to enlarge reamed holes by a few thousandths.
(c) The pilots and guides on these reamers are ground undersize for clearance.
(d) These reamers are standard with left-hand helical flutes.
(e) Number of flutes may vary in accordance with manufacturer's standard practice but must fall within the range specified in the table.
(f) The maximum expansion of these reamers is as follows:

1/4 to 7/16 incl., 0.006 in.
1/2 to 7/8 incl., 0.010 in.
1 to 1 1/4 incl., 0.012 in.

Copyright ASME International
Provided by IHS under license with ASME
No reproduction or networking permitted without license from IHS
Not for Resale

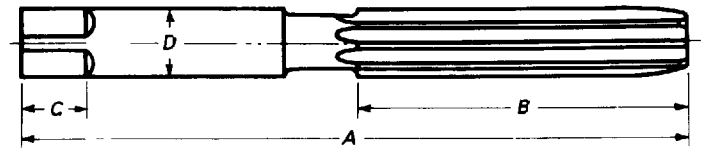

TABLE 3 HAND REAMERS WITH STRAIGHT FLUTES AND SQUARED SHANK — HIGH-SPEED STEEL

Diameter of Reamer		Dimensions					
Fractional	Decimal Equivalent	Length Overall *A*	Length of Flute *B*	Length of Square *C*	Diameter of Shank *D*	Size of Square	Number of Flutes
1/8	0.1250	3	1 1/2	5/32	1/8	0.095	4 to 6 incl.
9/64	0.1406	3 1/4	1 5/8	5/32	9/64	0.105	4 to 6 incl.
5/32	0.1562	3 1/4	1 5/8	7/32	5/32	0.115	4 to 6 incl.
11/64	0.1719	3 1/2	1 3/4	7/32	11/64	0.130	4 to 6 incl.
3/16	0.1875	3 1/2	1 3/4	7/32	3/16	0.140	4 to 6 incl.
13/64	0.2031	3 3/4	1 7/8	1/4	13/64	0.150	4 to 6 incl.
7/32	0.2188	3 3/4	1 7/8	1/4	7/32	0.165	4 to 6 incl.
15/64	0.2344	4	2	1/4	15/64	0.175	4 to 6 incl.
1/4	0.2500	4	2	1/4	1/4	0.185	4 to 6 incl.
17/64	0.2656	4 1/4	2 1/8	1/4	17/64	0.200	4 to 6 incl.
9/32	0.2812	4 1/4	2 1/8	1/4	9/32	0.210	4 to 6 incl.
19/64	0.2969	4 1/2	2 1/4	5/16	19/64	0.220	4 to 6 incl.
5/16	0.3125	4 1/2	2 1/4	5/16	5/16	0.235	4 to 6 incl.
21/64	0.3281	4 3/4	2 3/8	5/16	21/64	0.245	4 to 6 incl.
11/32	0.3438	4 3/4	2 3/8	5/16	11/32	0.255	4 to 6 incl.
23/64	0.3594	5	2 1/2	3/8	23/64	0.270	4 to 6 incl.
3/8	0.3750	5	2 1/2	3/8	3/8	0.280	4 to 6 incl.
25/64	0.3906	5 1/4	2 5/8	3/8	25/64	0.290	4 to 6 incl.
13/32	0.4062	5 1/4	2 5/8	3/8	13/32	0.305	6 to 8 incl.
27/64	0.4219	5 1/2	2 3/4	7/16	27/64	0.315	6 to 8 incl.
7/16	0.4375	5 1/2	2 3/4	7/16	7/16	0.330	6 to 8 incl.
29/64	0.4531	5 3/4	2 7/8	7/16	29/64	0.340	6 to 8 incl.
15/32	0.4688	5 3/4	2 7/8	7/16	15/32	0.350	6 to 8 incl.
31/64	0.4844	6	3	1/2	31/64	0.365	6 to 8 incl.
1/2	0.5000	6	3	1/2	1/2	0.375	6 to 8 incl.
17/32	0.5312	6 1/4	3 1/8	1/2	17/32	0.400	6 to 8 incl.
9/16	0.5625	6 1/2	3 1/4	9/16	9/16	0.420	6 to 8 incl.
19/32	0.5938	6 3/4	3 3/8	9/16	19/32	0.445	6 to 8 incl.
5/8	0.6250	7	3 1/2	5/8	5/8	0.470	6 to 8 incl.
21/32	0.6562	7 3/8	3 11/16	5/8	21/32	0.490	6 to 8 incl.
11/16	0.6875	7 3/4	3 7/8	11/16	11/16	0.515	6 to 8 incl.
23/32	0.7188	8 1/8	4 1/16	11/16	23/32	0.540	6 to 8 incl.
3/4	0.7500	8 3/8	4 3/16	3/4	3/4	0.560	6 to 8 incl.
7/8	0.8750	9 3/4	4 7/8	7/8	7/8	0.655	8 to 10 incl.
1	1.0000	10 7/8	5 7/16	1	1	0.750	8 to 10 incl.
1 1/8	1.1250	11 5/8	5 13/16	1	1 1/8	0.845	8 to 10 incl.
1 1/4	1.2500	12 1/4	6 1/8	1	1 1/4	0.935	8 to 12 incl.
1 3/8	1.3750	12 5/8	6 5/16	1	1 3/8	1.030	10 to 12 incl.
1 1/2	1.5000	13	6 1/2	1 1/8	1 1/2	1.125	10 to 14 incl.

GENERAL NOTE: Dimensions are in inches.

Copyright ASME International
Provided by IHS under license with ASME
No reproduction or networking permitted without license from IHS
Not for Resale

TOLERANCES FOR TABLE 3

Element	Range	Direction	Tolerance
Diameter of reamer	Up to 1/4 incl.	Plus	0.0001 to 0.0004
	Over 1/4 to 1 incl.	Plus	0.0001 to 0.0005
	Over 1	Plus	0.0002 to 0.0006
Length overall (*A*)	1/8 to 1 incl.	Plus or minus	1/16
	1 1/8 to 1 1/2 incl.	Plus or minus	3/32
Length of flute (*B*)	1/8 to 1 incl.	Plus or minus	1/16
	1 1/8 to 1 1/2 incl.	Plus or minus	3/32
Length of square (*C*)	1/8 to 1 incl.	Plus or minus	1/32
	1 1/8 to 1 1/2 incl.	Plus or minus	1/16
Diameter of shank (*D*)	1/8 to 1 incl.	Minus	0.001 to 0.005
	1 1/8 to 1 1/2 incl.	Minus	0.0015 to 0.006
Size of square	1/8 to 1/2 incl.	Minus	0.004
	17/32 to 1 incl.	Minus	0.006
	1 1/8 to 1 1/2 incl.	Minus	0.008

GENERAL NOTES:
(a) Dimensions are in inches.
(b) Hand reamers have a starting taper on the end.
(c) Number of flutes may vary in accordance with manufacturer's standard practice but must fall within the range specified in the table.

Copyright ASME International
Provided by IHS under license with ASME
No reproduction or networking permitted without license from IHS
Not for Resale

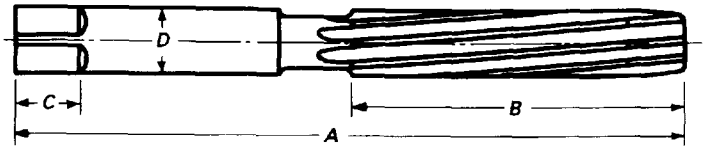

TABLE 4 HAND REAMERS WITH LEFT-HAND HELICAL FLUTES AND SQUARED SHANK — HIGH-SPEED STEEL

Diameter of Reamer		Dimensions					
Fractional	Decimal Equivalent	Length Overall *A*	Length of Flute *B*	Length of Square *C*	Diameter of Shank *D*	Size of Square	Number of Flutes
1/4	0.2500	4	2	1/4	1/4	0.185	4 to 6 incl.
5/16	0.3125	4 1/2	2 1/4	5/16	5/16	0.235	4 to 6 incl.
3/8	0.3750	5	2 1/2	3/8	3/8	0.280	4 to 6 incl.
7/16	0.4375	5 1/2	2 3/4	7/16	7/16	0.330	6 to 8 incl.
1/2	0.5000	6	3	1/2	1/2	0.375	6 to 8 incl.
9/16	0.5625	6 1/2	3 1/4	9/16	9/16	0.420	6 to 8 incl.
5/8	0.6250	7	3 1/2	5/8	5/8	0.470	6 to 8 incl.
11/16	0.6875	7 3/4	3 7/8	11/16	11/16	0.515	6 to 8 incl.
3/4	0.7500	8 3/8	4 3/16	3/4	3/4	0.560	6 to 8 incl.
13/16	0.8125	9 1/8	4 9/16	13/16	13/16	0.610	8 to 10 incl.
7/8	0.8750	9 3/4	4 7/8	7/8	7/8	0.655	8 to 10 incl.
15/16	0.9375	10 1/4	5 1/8	15/16	15/16	0.705	8 to 10 incl.
1	1.0000	10 7/8	5 7/16	1	1	0.750	8 to 10 incl.
1 1/8	1.1250	11 5/8	5 13/16	1	1 1/8	0.845	8 to 10 incl.
1 1/4	1.2500	12 1/4	6 1/8	1	1 1/4	0.935	8 to 12 incl.
1 3/8	1.3750	12 5/8	6 5/16	1	1 3/8	1.030	10 to 12 incl.
1 1/2	1.5000	13	6 1/2	1 1/8	1 1/2	1.125	10 to 14 incl.

GENERAL NOTE: Dimensions are in inches.

Copyright ASME International
Provided by IHS under license with ASME
No reproduction or networking permitted without license from IHS
Not for Resale

TOLERANCES FOR TABLE 4

Element	Range	Direction	Tolerance
Diameter of reamer	1/4	Plus	0.0001 to 0.0004
	Over 1/4 to 1 incl.	Plus	0.0001 to 0.0005
	Over 1	Plus	0.0002 to 0.0006
Length overall (*A*)	1/4 to 1 incl.	Plus or minus	1/16
	1 1/8 to 1 1/2 incl.	Plus or minus	3/32
Length of flute (*B*)	1/4 to 1 incl.	Plus or minus	1/16
	1 1/8 to 1 1/2 incl.	Plus or minus	3/32
Length of square (*C*)	1/4 to 1 incl.	Plus or minus	1/32
	1 1/8 to 1 1/2 incl.	Plus or minus	1/16
Diameter of shank (*D*)	1/4 to 1 incl.	Minus	0.001 to 0.005
	1 1/8 to 1 1/2 incl.	Minus	0.0015 to 0.006
Size of square	1/4 to 1/2 incl.	Minus	0.004
	9/16 to 1 incl.	Minus	0.006
	1 1/8 to 1 1/2 incl.	Minus	0.008

GENERAL NOTES:
(a) Dimensions are in inches.
(b) Hand reamers have a starting taper on the end.
(c) These reamers are standard with left-hand helical flutes.
(d) Number of flutes may vary in accordance with manufacturer's standard practice but must fall within the range specified in the table.

Copyright ASME International
Provided by IHS under license with ASME
No reproduction or networking permitted without license from IHS
Not for Resale

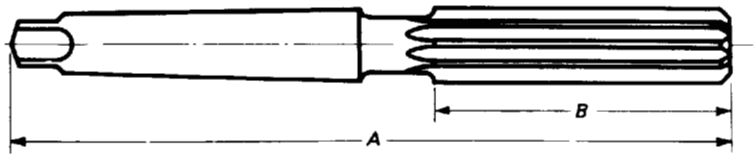

TABLE 5 TAPER SHANK JOBBERS REAMERS WITH STRAIGHT FLUTES — HIGH-SPEED STEEL

Diameter of Reamer		Dimensions			
Fractional	Decimal Equivalent	Length Overall *A*	Length of Flute *B*	Number of Morse Taper Shank [Note (1)]	Number of Flutes
1/4	0.2500	5 3/16	2	1	6 to 8 incl.
5/16	0.3125	5 1/2	2 1/4	1	6 to 8 incl.
3/8	0.3750	5 13/16	2 1/2	1	6 to 8 incl.
7/16	0.4375	6 1/8	2 3/4	1	6 to 8 incl.
1/2	0.5000	6 7/16	3	1	6 to 8 incl.
9/16	0.5625	6 3/4	3 1/4	1	6 to 8 incl.
5/8	0.6250	7 9/16	3 1/2	2	6 to 8 incl.
11/16	0.6875	8	3 7/8	2	8 to 10 incl.
3/4	0.7500	8 3/8	4 3/16	2	8 to 10 incl.
13/16	0.8125	8 13/16	4 9/16	2	8 to 10 incl.
7/8	0.8750	9 3/16	4 7/8	2	8 to 10 incl.
15/16	0.9375	10	5 1/8	3	8 to 10 incl.
1	1.0000	10 3/8	5 7/16	3	8 to 10 incl.
1 1/16	1.0625	10 5/8	5 5/8	3	8 to 10 incl.
1 1/8	1.1250	10 7/8	5 13/16	3	8 to 10 incl.
1 3/16	1.1875	11 1/8	6	3	8 to 12 incl.
1 1/4	1.2500	12 9/16	6 1/8	4	8 to 12 incl.
1 3/8	1.3750	12 13/16	6 5/16	4	10 to 12 incl.
1 1/2	1.5000	13 1/8	6 1/2	4	10 to 12 incl.

GENERAL NOTE: Dimensions are in inches.

NOTE:
(1) ASME B5.10 Machine Tapers

Copyright ASME International
Provided by IHS under license with ASME
No reproduction or networking permitted without license from IHS
Not for Resale

TOLERANCES FOR TABLE 5

Element	Range	Direction	Tolerance
Diameter of reamer	1/4	Plus	0.0001 to 0.0004
	Over 1/4 to 1 incl.	Plus	0.0001 to 0.0005
	Over 1	Plus	0.0002 to 0.0006
Length overall (*A*)	1/4 to 1 incl.	Plus or minus	1/16
	1 1/16 to 1 1/2 incl.	Plus or minus	3/32
Length of flute (*B*)	1/4 to 1 incl.	Plus or minus	1/16
	1 1/16 to 1 1/2 incl.	Plus or minus	3/32

GENERAL NOTES:
(a) Dimensions are in inches.
(b) Taper shank jobbers reamers have approximately the same flute length as hand reamers but are designed for machine use.
(c) Number of flutes may vary in accordance with manufacturer's standard practice but must fall within the range specified in the table.

Copyright ASME International
Provided by IHS under license with ASME
No reproduction or networking permitted without license from IHS
Not for Resale

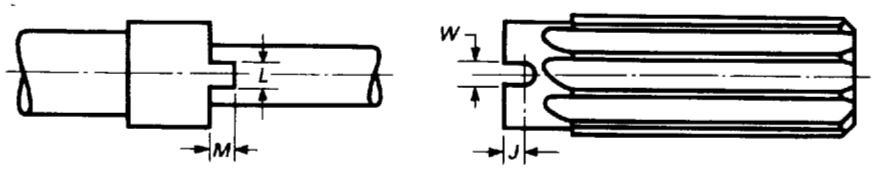

TABLE 6 DRIVING SLOTS AND LUGS FOR SHELL REAMERS AND SHELL REAMER ARBORS

Diameter Hole in Reamer at Large End [Note (1)]	Number of Arbor	Dimensions				
		Fitting Reamer Sizes	Driving Slot		Lug on Arbor	
			Width *W*	Depth *J*	Width *L*	Depth *M*
0.375	4	3/4	5/32	3/16	9/64	5/32
0.500	5	13/16–1	3/16	1/4	11/64	7/32
0.625	6	1 1/16–1 1/4	3/16	1/4	11/64	7/32
0.750	7	1 5/16–1 5/8	1/4	5/16	15/64	9/32
1.000	8	1 11/16–2	1/4	5/16	15/64	9/32
1.250	9	2 1/16–2 1/2	5/16	3/8	19/64	11/32

GENERAL NOTES:
(a) Dimensions are in inches.
(b) The hole in shell reamers shall have a taper of 1/8 in./ft, with arbors tapered to correspond.
(c) The driving slots in the ends of shell reamers and the lugs on the arbors shall be made in accordance with the above table.

NOTE:
(1) Shell reamer arbor tapers are made to permit a driving fit with the reamer.

Copyright ASME International
Provided by IHS under license with ASME
No reproduction or networking permitted without license from IHS
Not for Resale

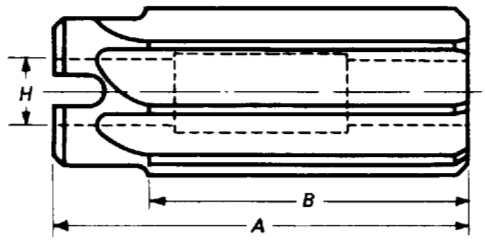

TABLE 7 SHELL REAMERS WITH STRAIGHT FLUTES — HIGH-SPEED STEEL

Diameter of Reamers		Dimensions			Fitting Arbor Number	Number of Flutes
Fractional	Decimal Equivalent	Length Overall *A*	Length of Flute *B*	Diameter Hole Large End *H*		
3/4	0.7500	2 1/4	1 1/2	0.375	4	8 to 10 incl.
7/8	0.8750	2 1/2	1 3/4	0.500	5	8 to 10 incl.
1	1.0000	2 1/2	1 3/4	0.500	5	8 to 10 incl.
1 1/16	1.0625	2 3/4	2	0.625	6	8 to 12 incl.
1 1/8	1.1250	2 3/4	2	0.625	6	8 to 12 incl.
1 3/16	1.1875	2 3/4	2	0.625	6	8 to 12 incl.
1 1/4	1.2500	2 3/4	2	0.625	6	8 to 12 incl.
1 5/16	1.3125	3	2 1/4	0.750	7	8 to 12 incl.
1 3/8	1.3750	3	2 1/4	0.750	7	8 to 12 incl.
1 7/16	1.4375	3	2 1/4	0.750	7	8 to 12 incl.
1 1/2	1.5000	3	2 1/4	0.750	7	10 to 14 incl.
1 9/16	1.5625	3	2 1/4	0.750	7	10 to 14 incl.
1 5/8	1.6250	3	2 1/4	0.750	7	10 to 14 incl.
1 11/16	1.6875	3 1/2	2 1/2	1.000	8	10 to 14 incl.
1 3/4	1.7500	3 1/2	2 1/2	1.000	8	12 to 14 incl.
1 13/16	1.8125	3 1/2	2 1/2	1.000	8	12 to 14 incl.
1 7/8	1.8750	3 1/2	2 1/2	1.000	8	12 to 14 incl.
1 15/16	1.9375	3 1/2	2 1/2	1.000	8	12 to 14 incl.
2	2.0000	3 1/2	2 1/2	1.000	8	12 to 14 incl.
2 1/8	2.1250	3 3/4	2 3/4	1.250	9	12 to 16 incl.
2 1/4	2.2500	3 3/4	2 3/4	1.250	9	12 to 16 incl.

GENERAL NOTE: Dimensions are in inches.

Copyright ASME International
Provided by IHS under license with ASME
No reproduction or networking permitted without license from IHS

Not for Resale

TOLERANCES FOR TABLE 7

Element	Range	Direction	Tolerance
Diameter of reamer	3/4 to 1 incl.	Plus	0.0001 to 0.0005
	Over 1	Plus	0.0002 to 0.0006
Length overall (*A*)	3/4 to 1 incl.	Plus or minus	1/16
	1 1/16 to 2 incl.	Plus or minus	3/32
	2 1/8 to 2 1/4 incl.	Plus or minus	1/8
Length of flute (*B*)	3/4 to 1 incl.	Plus or minus	1/16
	1 1/16 to 2 incl.	Plus or minus	3/32
	2 1/8 to 2 1/4 incl.	Plus or minus	1/8

GENERAL NOTES:
(a) Dimensions are in inches.
(b) Shell reamers are designed as a sizing or finishing reamer and are held on an arbor provided with driving lugs.
(c) The holes in these reamers are ground with a taper of 1/8 in./ft.
(d) Number of flutes may vary in accordance with manufacturer's standard practice but must fall within the range specified in the table.
(e) For details of holes and slots see Table 6.
(f) For shell reamer arbors see Tables 9 and 10.

Copyright ASME International
Provided by IHS under license with ASME
No reproduction or networking permitted without license from IHS
Not for Resale

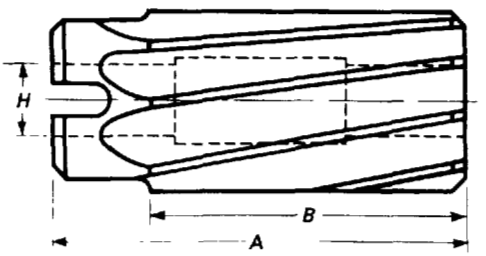

TABLE 8 SHELL REAMERS WITH LEFT-HAND HELICAL FLUTES — HIGH-SPEED STEEL

Diameter of Reamer		Dimensions				
Fractional	Decimal Equivalent	Length Overall *A*	Length of Flute *B*	Diameter Hole Large End *H*	Fitting Arbor Number	Number of Flutes
3/4	0.7500	2 1/4	1 1/2	0.375	4	8 to 10 incl.
7/8	0.8750	2 1/2	1 3/4	0.500	5	8 to 10 incl.
15/16	0.9375	2 1/2	1 3/4	0.500	5	8 to 10 incl.
1	1.0000	2 1/2	1 3/4	0.500	5	8 to 10 incl.
1 1/16	1.0625	2 3/4	2	0.625	6	8 to 12 incl.
1 1/8	1.1250	2 3/4	2	0.625	6	8 to 12 incl.
1 3/16	1.1875	2 3/4	2	0.625	6	8 to 12 incl.
1 1/4	1.2500	2 3/4	2	0.625	6	8 to 12 incl.
1 5/16	1.3125	3	2 1/4	0.750	7	8 to 12 incl.
1 3/8	1.3750	3	2 1/4	0.750	7	8 to 12 incl.
1 7/16	1.4375	3	2 1/4	0.750	7	8 to 12 incl.
1 1/2	1.5000	3	2 1/4	0.750	7	10 to 14 incl.
1 9/16	1.5625	3	2 1/4	0.750	7	10 to 14 incl.
1 5/8	1.6250	3	2 1/4	0.750	7	10 to 14 incl.
1 11/16	1.6875	3 1/2	2 1/2	1.000	8	10 to 14 incl.
1 3/4	1.7500	3 1/2	2 1/2	1.000	8	12 to 14 incl.
1 13/16	1.8125	3 1/2	2 1/2	1.000	8	12 to 14 incl.
1 7/8	1.8750	3 1/2	2 1/2	1.000	8	12 to 14 incl.
1 15/16	1.9375	3 1/2	2 1/2	1.000	8	12 to 14 incl.
2	2.0000	3 1/2	2 1/2	1.000	8	12 to 14 incl.
2 1/16	2.0625	3 3/4	2 3/4	1.250	9	12 to 16 incl.
2 1/8	2.1250	3 3/4	2 3/4	1.250	9	12 to 16 incl.
2 3/16	2.1875	3 3/4	2 3/4	1.250	9	12 to 16 incl.
2 1/4	2.2500	3 3/4	2 3/4	1.250	9	12 to 16 incl.
2 3/8	2.3750	3 3/4	2 3/4	1.250	9	14 to 16 incl.
2 1/2	2.5000	3 3/4	2 3/4	1.250	9	14 to 16 incl.

GENERAL NOTE: Dimensions are in inches.

Copyright ASME International
Provided by IHS under license with ASME
No reproduction or networking permitted without license from IHS
Not for Resale

TOLERANCES FOR TABLE 8

Element	Range	Direction	Tolerance
Diameter of reamer	3/4 to 1 incl.	Plus	0.0001 to 0.0005
	Over 1	Plus	0.0002 to 0.0006
Length overall (*A*)	3/4 to 1 incl.	Plus or minus	1/16
	1 1/16 to 2 incl.	Plus or minus	3/32
	2 1/16 to 2 1/2 incl.	Plus or minus	1/8
Length of flute (*B*)	3/4 to 1 incl.	Plus or minus	1/16
	1 1/16 to 2 incl.	Plus or minus	3/32
	2 1/16 to 2 1/2 incl.	Plus or minus	1/8

GENERAL NOTES:
(a) Dimensions are in inches.
(b) Shell reamers are designed as a sizing or finishing reamer and are held on an arbor provided with driving lugs.
(c) The holes in these reamers are ground with a taper of 1/8 in./ft.
(d) These reamers are standard with left-hand helical flutes.
(e) Number of flutes may vary in accordance with manufacturer's standard practice but must fall within the range specified in the table.
(f) For details of holes and slots, see Table 6.
(g) For shell reamer arbors, see Tables 9 and 10.

Copyright ASME International
Provided by IHS under license with ASME
No reproduction or networking permitted without license from IHS
Not for Resale

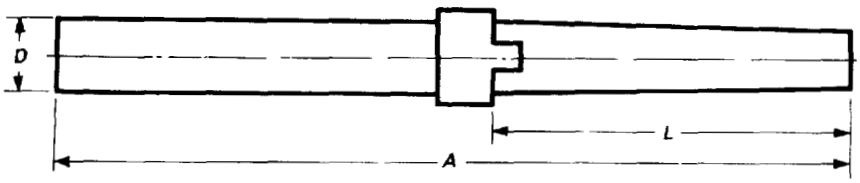

TABLE 9 ARBORS WITH STRAIGHT SHANKS FOR SHELL REAMERS

Size Number of Arbor	Dimensions			
	Length Overall *A*	Diameter of Shank *D*	Approximate Length of Taper *L*	Fitting Size Reamer
4	9	1/2	2 1/4	3/4
5	9 1/2	5/8	2 1/2	13/16 to 1
6	10	3/4	2 3/4	1 1/16 to 1 1/4
7	11	7/8	3	1 5/16 to 1 5/8
8	12	1 1/8	3 1/2	1 11/16 to 2
9	13	1 3/8	3 3/4	2 1/16 to 2 1/2

GENERAL NOTE: Dimensions are in inches.

TOLERANCES FOR TABLE 9

Element		Range Size Number	Direction	Tolerance
Length overall	(*A*)	4 to 5 incl.	Plus or minus	1/16
		6 to 8 incl.	Plus or minus	3/32
		9	Plus or minus	1/8
Diameter of shank	(*D*)	4 to 9 incl.	Minus	0.0005 to 0.002

GENERAL NOTES:
(a) Dimensions are in inches.
(b) These arbors are designed to fit shell reamers as shown in Tables 7 and 8.
(c) The end fitting the reamer is tapered 1/8 in./ft.
(d) For details of tapered ends and driving lugs, see Table 6.

Copyright ASME International
Provided by IHS under license with ASME
No reproduction or networking permitted without license from IHS
Not for Resale

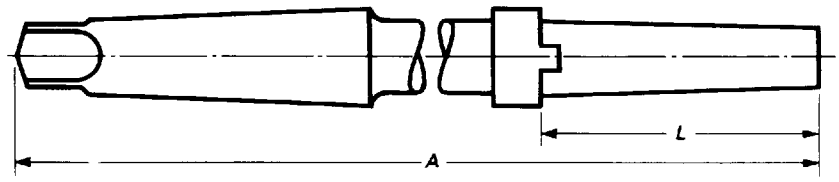

TABLE 10 ARBORS WITH TAPER SHANKS FOR SHELL REAMERS

Size Number of Arbor	Dimensions			Number of Morse Taper Shank [Note (1)]
	Length Overall *A*	Approximate Length of Taper *L*	Fitting Sizes Reamer	
4	9	2 1/4	3/4	2
5	9 1/2	2 1/2	13/16 to 1	2
6	10	2 3/4	1 1/16 to 1 1/4	3
7	11	3	1 5/16 to 1 5/8	3
8	12	3 1/2	1 11/16 to 2	4
9	13	3 3/4	2 1/16 to 2 1/2	4

GENERAL NOTE: Dimensions are in inches.

NOTE:
(1) ASME B5.10 Machine Tapers

TOLERANCES FOR TABLE 10

Element	Range Size Number	Direction	Tolerance
Length overall (*A*)	4 to 5 incl.	Plus or minus	1/16
	6 to 8 incl.	Plus or minus	3/32
	9	Plus or minus	1/8

GENERAL NOTES:
(a) Dimensions are in inches.
(b) These arbors are designed to fit shell reamers as shown in Tables 7 and 8.
(c) The end fitting the reamer is tapered 1/8 in./ft.
(d) For details of tapered ends and driving lugs, see Table 6.

Copyright ASME International
Provided by IHS under license with ASME
No reproduction or networking permitted without license from IHS Not for Resale

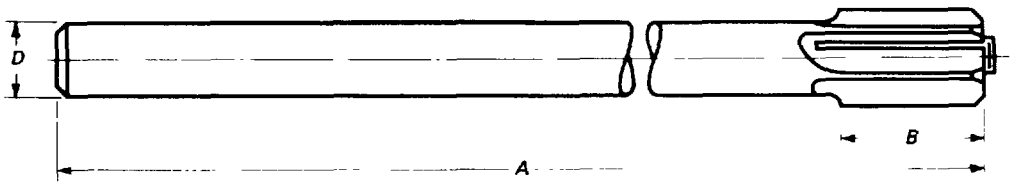

TABLE 11 EXPANSION CHUCKING REAMERS WITH STRAIGHT FLUTES AND STRAIGHT SHANK — HIGH-SPEED STEEL

Diameter of Reamer		Dimensions				
				Diameter of Shank *D*		
Fractional	Decimal Equivalent	Length Overall *A*	Length of Flute *B*	Max.	Min.	Number of Flutes
3/8	0.3750	7	3/4	0.3105	0.3095	4 to 6 incl.
13/32	0.4062	7	3/4	0.3105	0.3095	4 to 6 incl.
7/16	0.4375	7	7/8	0.3730	0.3720	4 to 6 incl.
15/32	0.4688	7	7/8	0.3730	0.3720	4 to 6 incl.
1/2	0.5000	8	1	0.4355	0.4345	6 to 8 incl.
17/32	0.5312	8	1	0.4355	0.4345	6 to 8 incl.
9/16	0.5625	8	1 1/8	0.4355	0.4345	6 to 8 incl.
19/32	0.5938	8	1 1/8	0.4355	0.4345	6 to 8 incl.
5/8	0.6250	9	1 1/4	0.5620	0.5605	6 to 8 incl.
21/32	0.6562	9	1 1/4	0.5620	0.5605	6 to 8 incl.
11/16	0.6875	9	1 1/4	0.5620	0.5605	6 to 8 incl.
23/32	0.7188	9	1 1/4	0.5620	0.5605	6 to 8 incl.
3/4	0.7500	9 1/2	1 3/8	0.6245	0.6230	6 to 8 incl.
25/32	0.7812	9 1/2	1 3/8	0.6245	0.6230	6 to 8 incl.
13/16	0.8125	9 1/2	1 3/8	0.6245	0.6230	6 to 8 incl.
27/32	0.8438	9 1/2	1 3/8	0.6245	0.6230	6 to 8 incl.
7/8	0.8750	10	1 1/2	0.7495	0.7480	6 to 8 incl.
29/32	0.9062	10	1 1/2	0.7495	0.7480	6 to 8 incl.
15/16	0.9375	10	1 1/2	0.7495	0.7480	6 to 8 incl.
31/32	0.9688	10	1 1/2	0.7495	0.7480	6 to 8 incl.
1	1.0000	10 1/2	1 5/8	0.8745	0.8730	8 to 10 incl.
1 1/32	1.0312	10 1/2	1 5/8	0.8745	0.8730	8 to 10 incl.
1 1/16	1.0625	10 1/2	1 5/8	0.8745	0.8730	8 to 10 incl.
1 3/32	1.0938	10 1/2	1 5/8	0.8745	0.8730	8 to 10 incl.
1 1/8	1.1250	11	1 3/4	0.8745	0.8730	8 to 10 incl.
1 5/32	1.1562	11	1 3/4	0.8745	0.8730	8 to 10 incl.
1 3/16	1.1875	11	1 3/4	0.9995	0.9980	8 to 10 incl.
1 7/32	1.2188	11	1 3/4	0.9995	0.9980	8 to 10 incl.

(Table 11 continues on next page)

Copyright ASME International
Provided by IHS under license with ASME
No reproduction or networking permitted without license from IHS
Not for Resale

TABLE 11 EXPANSION CHUCKING REAMERS WITH STRAIGHT FLUTES AND STRAIGHT SHANK — HIGH-SPEED STEEL (CONT'D)

Diameter of Reamer		Dimensions				
				Diameter of Shank *D*		
Fractional	Decimal Equivalent	Length Overall *A*	Length of Flute *B*	Max.	Min.	Number of Flutes
1 1/4	1.2500	11 1/2	1 7/8	0.9995	0.9980	8 to 10 incl.
1 5/16	1.3125	11 1/2	1 7/8	0.9995	0.9980	8 to 10 incl.
1 3/8	1.3750	12	2	0.9995	0.9980	8 to 10 incl.
1 7/16	1.4375	12	2	1.2495	1.2480	8 to 10 incl.
1 1/2	1.5000	12 1/2	2 1/8	1.2495	1.2480	8 to 10 incl.
1 9/16	1.5625	12 1/2	2 1/8	1.2495	1.2480	8 to 10 incl.
1 5/8	1.6250	13	2 1/4	1.2495	1.2480	8 to 10 incl.
1 11/16	1.6875	13	2 1/4	1.2495	1.2480	8 to 10 incl.
1 3/4	1.7500	13 1/2	2 3/8	1.2495	1.2480	8 to 12 incl.
1 13/16	1.8125	13 1/2	2 3/8	1.4995	1.4980	8 to 12 incl.
1 7/8	1.8750	14	2 1/2	1.4995	1.4980	8 to 12 incl.
1 15/16	1.9375	14	2 1/2	1.4995	1.4980	8 to 12 incl.
2	2.0000	14	2 1/2	1.4995	1.4980	10 to 12 incl.

GENERAL NOTE: Dimensions are in inches.

TOLERANCES FOR TABLE 11

Element	Range	Direction	Tolerance
Diameter of reamer	3/8 to 1 incl.	Plus	0.0001 to 0.0005
	Over 1	Plus	0.0002 to 0.0006
Length overall (*A*)	3/8 to 1 incl.	Plus or minus	1/16
	1 1/32 to 2 incl.	Plus or minus	3/32
Length of flute (*B*)	3/8 to 1 incl.	Plus or minus	1/16
	1 1/32 to 2 incl.	Plus or minus	3/32

GENERAL NOTES:
(a) Dimensions are in inches.
(b) The expansion feature of these reamers provides a means of adjustment.
(c) When worn undersize they may be expanded and reground to the original size.
(d) Number of flutes may vary in accordance with manufacturer's standard practice but must fall within the range specified in the table.

Copyright ASME International
Provided by IHS under license with ASME
No reproduction or networking permitted without license from IHS
Not for Resale

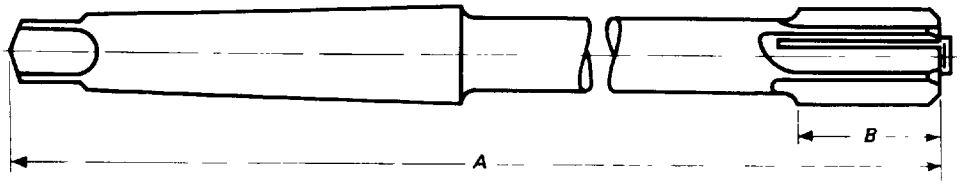

TABLE 12 EXPANSION CHUCKING REAMERS WITH STRAIGHT FLUTES AND TAPER SHANK — HIGH-SPEED STEEL

Diameter of Reamer		Dimensions			
Fractional	Decimal Equivalent	Length Overall *A*	Length of Flute *B*	Number of Morse Taper Shank [Note (1)]	Number of Flutes
3/8	0.3750	7	3/4	1	4 to 6 incl.
13/32	0.4062	7	3/4	1	4 to 6 incl.
7/16	0.4375	7	7/8	1	4 to 6 incl.
15/32	0.4688	7	7/8	1	4 to 6 incl.
1/2	0.5000	8	1	1	6 to 8 incl.
17/32	0.5312	8	1	1	6 to 8 incl.
9/16	0.5625	8	1 1/8	1	6 to 8 incl.
19/32	0.5938	8	1 1/8	1	6 to 8 incl.
5/8	0.6250	9	1 1/4	2	6 to 8 incl.
21/32	0.6562	9	1 1/4	2	6 to 8 incl.
11/16	0.6875	9	1 1/4	2	6 to 8 incl.
23/32	0.7188	9	1 1/4	2	6 to 8 incl.
3/4	0.7500	9 1/2	1 3/8	2	6 to 8 incl.
25/32	0.7812	9 1/2	1 3/8	2	6 to 8 incl.
13/16	0.8125	9 1/2	1 3/8	2	6 to 8 incl.
27/32	0.8438	9 1/2	1 3/8	2	6 to 8 incl.
7/8	0.8750	10	1 1/2	2	6 to 8 incl.
29/32	0.9062	10	1 1/2	2	6 to 8 incl.
15/16	0.9375	10	1 1/2	3	6 to 8 incl.
31/32	0.9688	10	1 1/2	3	6 to 8 incl.
1	1.0000	10 1/2	1 5/8	3	8 to 10 incl.
1 1/32	1.0312	10 1/2	1 5/8	3	8 to 10 incl.
1 1/16	1.0625	10 1/2	1 5/8	3	8 to 10 incl.
1 3/32	1.0938	10 1/2	1 5/8	3	8 to 10 incl.
1 1/8	1.1250	11	1 3/4	3	8 to 10 incl.
1 5/32	1.1562	11	1 3/4	3	8 to 10 incl.
1 3/16	1.1875	11	1 3/4	3	8 to 10 incl.
1 7/32	1.2188	11	1 3/4	3	8 to 10 incl.

(Table 12 continues on next page)

Copyright ASME International
Provided by IHS under license with ASME
No reproduction or networking permitted without license from IHS

Not for Resale

TABLE 12 EXPANSION CHUCKING REAMERS WITH STRAIGHT FLUTES AND TAPER SHANK — HIGH-SPEED STEEL (CONT'D)

Diameter of Reamer		Dimensions			
Fractional	Decimal Equivalent	Length Overall *A*	Length of Flute *B*	Number of Morse Taper Shank [Note (1)]	Number of Flutes
1 1/4	1.2500	11 1/2	1 7/8	4	8 to 10 incl.
1 5/16	1.3125	11 1/2	1 7/8	4	8 to 10 incl.
1 3/8	1.3750	12	2	4	8 to 10 incl.
1 7/16	1.4375	12	2	4	8 to 10 incl.
1 1/2	1.5000	12 1/2	2 1/8	4	8 to 10 incl.
1 5/8	1.6250	13	2 1/4	4	8 to 10 incl.
1 3/4	1.7500	13 1/2	2 3/8	5	8 to 12 incl.
1 7/8	1.8750	14	2 1/2	5	8 to 12 incl.
2	2.0000	14	2 1/2	5	10 to 12 incl.
2 1/8	2.1250	14 1/2	2 3/4	5	10 to 12 incl.
2 1/4	2.2500	14 1/2	2 3/4	5	10 to 12 incl.
2 3/8	2.3750	15	3	5	10 to 14 incl.
2 1/2	2.5000	15	3	5	10 to 14 incl.

GENERAL NOTE: Dimensions are in inches.

NOTE:
(1) ASME B5.10 Machine Tapers

TOLERANCES FOR TABLE 12

Element	Range	Direction	Tolerance
Diameter of reamer	3/8 to 1 incl.	Plus	0.0001 to 0.0005
	Over 1	Plus	0.0002 to 0.0006
Length overall (*A*)	3/8 to 1 incl.	Plus or minus	1/16
	1 1/32 to 2 incl.	Plus or minus	3/32
	2 1/8 to 2 1/2 incl.	Plus or minus	1/8
Length of flute (*B*)	3/8 to 1 incl.	Plus or minus	1/16
	1 1/32 to 2 incl.	Plus or minus	3/32
	2 1/8 to 2 1/2 incl.	Plus or minus	1/8

GENERAL NOTES:
(a) Dimensions are in inches.
(b) The expansion feature of these reamers provides a means of adjustment.
(c) When worn undersize, they may be expanded and reground to the original size.
(d) Number of flutes may vary in accordance with manufacturer's standard practice but must fall within the range specified in the table.

Copyright ASME International
Provided by IHS under license with ASME
No reproduction or networking permitted without license from IHS Not for Resale

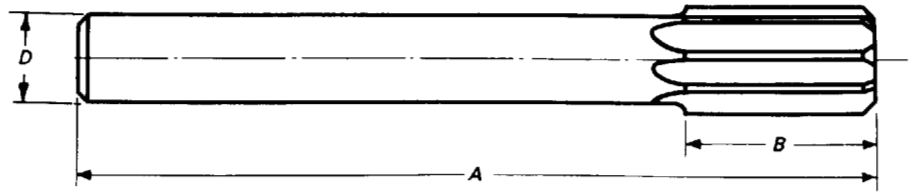

TABLE 13 STRAIGHT SHANK CHUCKING REAMERS WITH STRAIGHT FLUTES — HIGH-SPEED STEEL, FRACTIONAL SIZES

Diameter of Reamer		Dimensions				
				Diameter of Shank *D*		
Fractional	Decimal Equivalent	Length Overall *A*	Length of Flute *B*	Max.	Min.	Number of Flutes
3/64	0.0469	2 1/2	1/2	0.0455	0.0445	4
1/16	0.0625	2 1/2	1/2	0.0585	0.0575	4
5/64	0.0781	3	3/4	0.0720	0.0710	4
3/32	0.0938	3	3/4	0.0880	0.0870	4
7/64	0.1094	3 1/2	7/8	0.1030	0.1020	4 to 6 incl.
1/8	0.1250	3 1/2	7/8	0.1190	0.1180	4 to 6 incl.
9/64	0.1406	4	1	0.1350	0.1340	4 to 6 incl.
5/32	0.1562	4	1	0.1510	0.1500	4 to 6 incl.
11/64	0.1719	4 1/2	1 1/8	0.1645	0.1635	4 to 6 incl.
3/16	0.1875	4 1/2	1 1/8	0.1805	0.1795	4 to 6 incl.
13/64	0.2031	5	1 1/4	0.1945	0.1935	4 to 6 incl.
7/32	0.2188	5	1 1/4	0.2075	0.2065	4 to 6 incl.
15/64	0.2344	6	1 1/2	0.2265	0.2255	4 to 6 incl.
1/4	0.2500	6	1 1/2	0.2405	0.2395	4 to 6 incl.
17/64	0.2656	6	1 1/2	0.2485	0.2475	4 to 6 incl.
9/32	0.2812	6	1 1/2	0.2485	0.2475	4 to 6 incl.
19/64	0.2969	6	1 1/2	0.2792	0.2782	4 to 6 incl.
5/16	0.3125	6	1 1/2	0.2792	0.2782	4 to 6 incl.
21/64	0.3281	6	1 1/2	0.2792	0.2782	4 to 6 incl.
11/32	0.3438	6	1 1/2	0.2792	0.2782	4 to 6 incl.
23/64	0.3594	7	1 3/4	0.3105	0.3095	4 to 6 incl.
3/8	0.3750	7	1 3/4	0.3105	0.3095	4 to 6 incl.
25/64	0.3906	7	1 3/4	0.3105	0.3095	4 to 6 incl.
13/32	0.4062	7	1 3/4	0.3105	0.3095	4 to 6 incl.
27/64	0.4219	7	1 3/4	0.3730	0.3720	6 to 8 incl.
7/16	0.4375	7	1 3/4	0.3730	0.3720	6 to 8 incl.
29/64	0.4531	7	1 3/4	0.3730	0.3720	6 to 8 incl.
15/32	0.4688	7	1 3/4	0.3730	0.3720	6 to 8 incl.

(Table 13 continues on next page)

Copyright ASME International
Provided by IHS under license with ASME
No reproduction or networking permitted without license from IHS

Not for Resale

TABLE 13 STRAIGHT SHANK CHUCKING REAMERS WITH STRAIGHT FLUTES — HIGH-SPEED STEEL, FRACTIONAL SIZES (CONT'D)

Diameter of Reamer		Dimensions				
Fractional	Decimal Equivalent	Length Overall *A*	Length of Flute *B*	Diameter of Shank *D* Max.	Diameter of Shank *D* Min.	Number of Flutes
31/64	0.4844	8	2	0.4355	0.4345	6 to 8 incl.
1/2	0.5000	8	2	0.4355	0.4345	6 to 8 incl.
17/32	0.5312	8	2	0.4355	0.4345	6 to 8 incl.
9/16	0.5625	8	2	0.4355	0.4345	6 to 8 incl.
19/32	0.5938	8	2	0.4355	0.4345	6 to 8 incl.
5/8	0.6250	9	2 1/4	0.5620	0.5605	6 to 8 incl.
21/32	0.6562	9	2 1/4	0.5620	0.5605	6 to 8 incl.
11/16	0.6875	9	2 1/4	0.5620	0.5605	6 to 8 incl.
23/32	0.7188	9	2 1/4	0.5620	0.5605	6 to 8 incl.
3/4	0.7500	9 1/2	2 1/2	0.6245	0.6230	6 to 8 incl.
25/32	0.7812	9 1/2	2 1/2	0.6245	0.6230	8 to 10 incl.
13/16	0.8125	9 1/2	2 1/2	0.6245	0.6230	8 to 10 incl.
27/32	0.8438	9 1/2	2 1/2	0.6245	0.6230	8 to 10 incl.
7/8	0.8750	10	2 5/8	0.7495	0.7480	8 to 10 incl.
29/32	0.9062	10	2 5/8	0.7495	0.7480	8 to 10 incl.
15/16	0.9375	10	2 5/8	0.7495	0.7480	8 to 10 incl.
31/32	0.9688	10	2 5/8	0.7495	0.7480	8 to 10 incl.
1	1.0000	10 1/2	2 3/4	0.8745	0.8730	8 to 12 incl.
1 1/16	1.0625	10 1/2	2 3/4	0.8745	0.8730	8 to 12 incl.
1 1/8	1.1250	11	2 7/8	0.8745	0.8730	8 to 12 incl.
1 3/16	1.1875	11	2 7/8	0.9995	0.9980	8 to 12 incl.
1 1/4	1.2500	11 1/2	3	0.9995	0.9980	8 to 12 incl.
1 3/8	1.3750	12	3 1/4	0.9995	0.9980	10 to 12 incl.
1 1/2	1.5000	12 1/2	3 1/2	1.2495	1.2480	10 to 12 incl.

GENERAL NOTES:
(a) Dimensions are in inches.
(b) These reamers are end cutting on the chamfer and the relief on the outside diameter is ground in back of the margin for the full length of the land.
(c) Number of flutes may vary in accordance with manufacturer's standard practice but must fall within the range specified in the table.

TOLERANCES FOR TABLE 13

Element	Range	Direction	Tolerance
Diameter of reamer	Up to 1/4 incl.	Plus	0.0001 to 0.0004
	Over 1/4 to 1 incl.	Plus	0.0001 to 0.0005
	Over 1	Plus	0.0002 to 0.0006
Length overall (*A*)	3/64 to 1 incl.	Plus or minus	1/16
	1 1/16 to 1 1/2 incl.	Plus or minus	3/32
Length of flute (*B*)	3/64 to 1 incl.	Plus or minus	1/16
	1 1/16 to 1 1/2 incl.	Plus or minus	3/32

GENERAL NOTE: Dimensions are in inches.

Copyright ASME International
Provided by IHS under license with ASME
No reproduction or networking permitted without license from IHS
Not for Resale

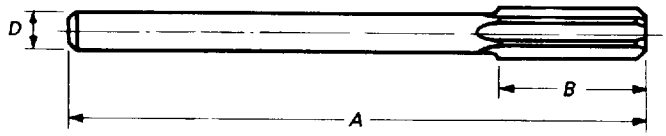

TABLE 14 STRAIGHT SHANK CHUCKING REAMERS WITH STRAIGHT FLUTES — HIGH-SPEED STEEL, WIRE GAGE SIZES

Diameter of Reamer		Dimensions				
				Diameter of Shank *D*		
Wire Gage	Decimal Equivalent	Length Overall *A*	Length of Flute *B*	Max.	Min.	Number of Flutes
60	0.0400	2½	½	0.0390	0.0380	4
59	0.0410	2½	½	0.0390	0.0380	4
58	0.0420	2½	½	0.0390	0.0380	4
57	0.0430	2½	½	0.0390	0.0380	4
56	0.0465	2½	½	0.0455	0.0445	4
55	0.0520	2½	½	0.0510	0.0500	4
54	0.0550	2½	½	0.0510	0.0500	4
53	0.0595	2½	½	0.0585	0.0575	4
52	0.0635	2½	½	0.0585	0.0575	4
51	0.0670	3	¾	0.0660	0.0650	4
50	0.0700	3	¾	0.0660	0.0650	4
49	0.0730	3	¾	0.0660	0.0650	4
48	0.0760	3	¾	0.0720	0.0710	4
47	0.0785	3	¾	0.0720	0.0710	4
46	0.0810	3	¾	0.0771	0.0761	4
45	0.0820	3	¾	0.0771	0.0761	4
44	0.0860	3	¾	0.0810	0.0800	4
43	0.0890	3	¾	0.0810	0.0800	4
42	0.0935	3	¾	0.0880	0.0870	4
41	0.0960	3½	⅞	0.0928	0.0918	4 to 6 incl.
40	0.0980	3½	⅞	0.0928	0.0918	4 to 6 incl.
39	0.0995	3½	⅞	0.0928	0.0918	4 to 6 incl.
38	0.1015	3½	⅞	0.0950	0.0940	4 to 6 incl.
37	0.1040	3½	⅞	0.0950	0.0940	4 to 6 incl.
36	0.1065	3½	⅞	0.1030	0.1020	4 to 6 incl.
35	0.1100	3½	⅞	0.1030	0.1020	4 to 6 incl.
34	0.1110	3½	⅞	0.1055	0.1045	4 to 6 incl.
33	0.1130	3½	⅞	0.1055	0.1045	4 to 6 incl.
32	0.1160	3½	⅞	0.1120	0.1110	4 to 6 incl.
31	0.1200	3½	⅞	0.1120	0.1110	4 to 6 incl.
30	0.1285	3½	⅞	0.1190	0.1180	4 to 6 incl.
29	0.1360	4	1	0.1275	0.1265	4 to 6 incl.
28	0.1405	4	1	0.1350	0.1340	4 to 6 incl.
27	0.1440	4	1	0.1350	0.1340	4 to 6 incl.
26	0.1470	4	1	0.1430	0.1420	4 to 6 incl.
25	0.1495	4	1	0.1430	0.1420	4 to 6 incl.

(Table 14 continues on next page)

Copyright ASME International
Provided by IHS under license with ASME
No reproduction or networking permitted without license from IHS
Not for Resale

TABLE 14 STRAIGHT SHANK CHUCKING REAMERS WITH STRAIGHT FLUTES — HIGH-SPEED STEEL, WIRE GAGE SIZES (CONT'D)

Diameter of Reamer		Dimensions				
				Diameter of Shank *D*		
Wire Gage	Decimal Equivalent	Length Overall *A*	Length of Flute *B*	Max.	Min.	Number of Flutes
24	0.1520	4	1	0.1460	0.1450	4 to 6 incl.
23	0.1540	4	1	0.1460	0.1450	4 to 6 incl.
22	0.1570	4	1	0.1510	0.1500	4 to 6 incl.
21	0.1590	4 1/2	1 1/8	0.1530	0.1520	4 to 6 incl.
20	0.1610	4 1/2	1 1/8	0.1530	0.1520	4 to 6 incl.
19	0.1660	4 1/2	1 1/8	0.1595	0.1585	4 to 6 incl.
18	0.1695	4 1/2	1 1/8	0.1595	0.1585	4 to 6 incl.
17	0.1730	4 1/2	1 1/8	0.1645	0.1635	4 to 6 incl.
16	0.1770	4 1/2	1 1/8	0.1704	0.1694	4 to 6 incl.
15	0.1800	4 1/2	1 1/8	0.1755	0.1745	4 to 6 incl.
14	0.1820	4 1/2	1 1/8	0.1755	0.1745	4 to 6 incl.
13	0.1850	4 1/2	1 1/8	0.1805	0.1795	4 to 6 incl.
12	0.1890	4 1/2	1 1/8	0.1805	0.1795	4 to 6 incl.
11	0.1910	5	1 1/4	0.1860	0.1850	4 to 6 incl.
10	0.1935	5	1 1/4	0.1860	0.1850	4 to 6 incl.
9	0.1960	5	1 1/4	0.1895	0.1885	4 to 6 incl.
8	0.1990	5	1 1/4	0.1895	0.1885	4 to 6 incl.
7	0.2010	5	1 1/4	0.1945	0.1935	4 to 6 incl.
6	0.2040	5	1 1/4	0.1945	0.1935	4 to 6 incl.
5	0.2055	5	1 1/4	0.2016	0.2006	4 to 6 incl.
4	0.2090	5	1 1/4	0.2016	0.2006	4 to 6 incl.
3	0.2130	5	1 1/4	0.2075	0.2065	4 to 6 incl.
2	0.2210	6	1 1/2	0.2173	0.2163	4 to 6 incl.
1	0.2280	6	1 1/2	0.2173	0.2163	4 to 6 incl.

GENERAL NOTE: Dimensions are in inches.

TOLERANCES FOR TABLE 14

Element	Range	Direction	Tolerance
Size of reamer	#60 to #1 incl.	Plus	0.0001 to 0.0004
Length overall (*A*)	#60 to #1 incl.	Plus or minus	1/16
Length of flute (*B*)	#60 to #1 incl.	Plus or minus	1/16

GENERAL NOTES:
(a) Dimensions are in inches.
(b) These reamers are end cutting on the chamfer and the relief on the outside diameter is ground in back of the margin for the full length of the land.
(c) Number of flutes may vary in accordance with manufacturer's standard practice but must fall within the range specified in the table.

Copyright ASME International
Provided by IHS under license with ASME
No reproduction or networking permitted without license from IHS Not for Resale

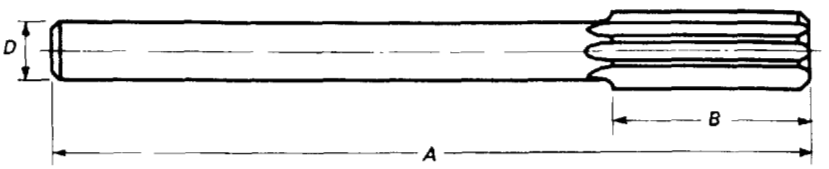

TABLE 15 STRAIGHT SHANK CHUCKING REAMERS WITH STRAIGHT FLUTES — HIGH-SPEED STEEL, LETTER SIZES

Diameter of Reamer		Dimensions				
Letter	Decimal Equivalent	Length Overall *A*	Length of Flute *B*	Diameter of Shank *D* Max.	Diameter of Shank *D* Min.	Number of Flutes
A	0.2340	6	1½	0.2265	0.2255	4 to 6 incl.
B	0.2380	6	1½	0.2329	0.2319	4 to 6 incl.
C	0.2420	6	1½	0.2329	0.2319	4 to 6 incl.
D	0.2460	6	1½	0.2329	0.2319	4 to 6 incl.
E	0.2500	6	1½	0.2405	0.2395	4 to 6 incl.
F	0.2570	6	1½	0.2485	0.2475	4 to 6 incl.
G	0.2610	6	1½	0.2485	0.2475	4 to 6 incl.
H	0.2660	6	1½	0.2485	0.2475	4 to 6 incl.
I	0.2720	6	1½	0.2485	0.2475	4 to 6 incl.
J	0.2770	6	1½	0.2485	0.2475	4 to 6 incl.
K	0.2810	6	1½	0.2485	0.2475	4 to 6 incl.
L	0.2900	6	1½	0.2792	0.2782	4 to 6 incl.
M	0.2950	6	1½	0.2792	0.2782	4 to 6 incl.
N	0.3020	6	1½	0.2792	0.2782	4 to 6 incl.
O	0.3160	6	1½	0.2792	0.2782	4 to 6 incl.
P	0.3230	6	1½	0.2792	0.2782	4 to 6 incl.
Q	0.3320	6	1½	0.2792	0.2782	4 to 6 incl.
R	0.3390	6	1½	0.2792	0.2782	4 to 6 incl.
S	0.3480	7	1¾	0.3105	0.3095	4 to 6 incl.
T	0.3580	7	1¾	0.3105	0.3095	4 to 6 incl.
U	0.3680	7	1¾	0.3105	0.3095	4 to 6 incl.
V	0.3770	7	1¾	0.3105	0.3095	4 to 6 incl.
W	0.3860	7	1¾	0.3105	0.3095	4 to 6 incl.
X	0.3970	7	1¾	0.3105	0.3095	4 to 6 incl.
Y	0.4040	7	1¾	0.3105	0.3095	4 to 6 incl.
Z	0.4130	7	1¾	0.3730	0.3720	4 to 8 incl.

GENERAL NOTE: Dimensions are in inches.

Copyright ASME International
Provided by IHS under license with ASME
No reproduction or networking permitted without license from IHS
Not for Resale

TOLERANCES FOR TABLE 15

Element	Range	Direction	Tolerance
Size of reamer	A to E incl.	Plus	0.0001 to 0.0004
	F to Z incl.	Plus	0.0001 to 0.0005
Length overall (*A*)	A to Z incl.	Plus or minus	1/16
Length of flute (*B*)	A to Z incl.	Plus or minus	1/16

GENERAL NOTES:
(a) Dimensions are in inches.
(b) These reamers are end cutting on the chamfer and the relief on the outside diameter is ground in back of the margin for the full length of the land.
(c) Number of flutes may vary in accordance with manufacturer's standard practice but must fall within the range specified in the table.

Copyright ASME International
Provided by IHS under license with ASME
No reproduction or networking permitted without license from IHS
Not for Resale

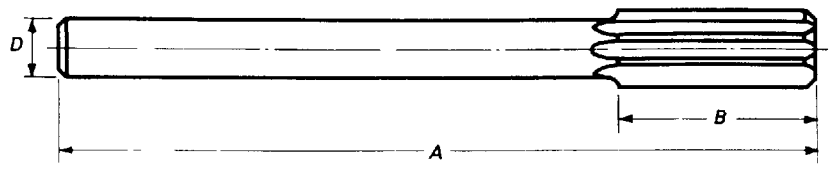

TABLE 16 STRAIGHT SHANK CHUCKING REAMERS WITH STRAIGHT FLUTES — HIGH-SPEED STEEL, DECIMAL SIZES

Diameter of Reamer Decimal	Dimensions				Number of Flutes
	Length Overall *A*	Length of Flute *B*	Diameter of Shank *D*		
			Max.	Min.	
0.1240	3½	⅞	0.1190	0.1180	4 to 6 incl.
0.1260	3½	⅞	0.1190	0.1180	4 to 6 incl.
0.1865	4½	1⅛	0.1805	0.1795	4 to 6 incl.
0.1885	4½	1⅛	0.1805	0.1795	4 to 6 incl.
0.2490	6	1½	0.2405	0.2395	4 to 6 incl.
0.2510	6	1½	0.2405	0.2395	4 to 6 incl.
0.3115	6	1½	0.2792	0.2782	4 to 6 incl.
0.3135	6	1½	0.2792	0.2782	4 to 6 incl.
0.3740	7	1¾	0.3105	0.3095	6 to 8 incl.
0.3760	7	1¾	0.3105	0.3095	6 to 8 incl.
0.4365	7	1¾	0.3730	0.3720	6 to 8 incl.
0.4385	7	1¾	0.3730	0.3720	6 to 8 incl.
0.4990	8	2	0.4355	0.4345	6 to 8 incl.
0.5010	8	2	0.4355	0.4345	6 to 8 incl.

GENERAL NOTE: Dimensions are in inches.

TOLERANCES FOR TABLE 16

Element	Range	Direction	Tolerance
Diameter of reamer	0.124 to 0.249 incl. 0.251 to 0.501 incl.	Plus Plus	0.0001 to 0.0004 0.0001 to 0.0005
Length overall (*A*)	0.124 to 0.501 incl.	Plus or minus	1/16
Length of flute (*B*)	0.124 to 0.501 incl.	Plus or minus	1/16

GENERAL NOTES:
(a) Dimensions are in inches.
(b) These reamers are end cutting on the chamfer and the relief on the outside diameter is ground in back of the margin for the full length of the land.
(c) Number of flutes may vary in accordance with manufacturer's standard practice but must fall within the range specified in the table.

Copyright ASME International
Provided by IHS under license with ASME
No reproduction or networking permitted without license from IHS
Not for Resale

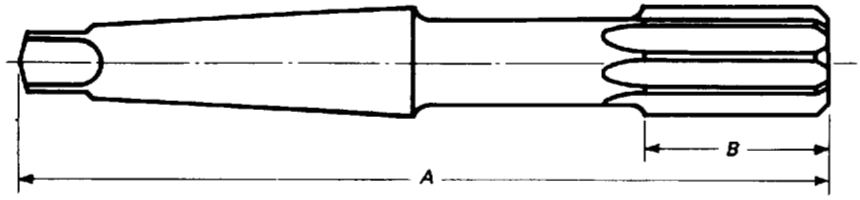

TABLE 17 TAPER SHANK CHUCKING REAMERS WITH STRAIGHT FLUTES — HIGH-SPEED STEEL

Diameter of Reamer		Dimensions		Number of Morse Taper Shank [Note (1)]	Number of Flutes
Fractional	Decimal Equivalent	Length Overall *A*	Length of Flute *B*		
1/4	0.2500	6	1 1/2	1	4 to 6 incl.
5/16	0.3125	6	1 1/2	1	4 to 6 incl.
3/8	0.3750	7	1 3/4	1	4 to 6 incl.
7/16	0.4375	7	1 3/4	1	6 to 8 incl.
1/2	0.5000	8	2	1	6 to 8 incl.
17/32	0.5312	8	2	1	6 to 8 incl.
9/16	0.5625	8	2	1	6 to 8 incl.
19/32	0.5938	8	2	1	6 to 8 incl.
5/8	0.6250	9	2 1/4	2	6 to 8 incl.
21/32	0.6562	9	2 1/4	2	6 to 8 incl.
11/16	0.6875	9	2 1/4	2	6 to 8 incl.
23/32	0.7188	9	2 1/4	2	6 to 8 incl.
3/4	0.7500	9 1/2	2 1/2	2	6 to 8 incl.
25/32	0.7812	9 1/2	2 1/2	2	8 to 10 incl.
13/16	0.8125	9 1/2	2 1/2	2	8 to 10 incl.
27/32	0.8438	9 1/2	2 1/2	2	8 to 10 incl.
7/8	0.8750	10	2 5/8	2	8 to 10 incl.
29/32	0.9062	10	2 5/8	2	8 to 10 incl.
15/16	0.9375	10	2 5/8	3	8 to 10 incl.
31/32	0.9688	10	2 5/8	3	8 to 10 incl.
1	1.0000	10 1/2	2 3/4	3	8 to 12 incl.
1 1/16	1.0625	10 1/2	2 3/4	3	8 to 12 incl.
1 1/8	1.1250	11	2 7/8	3	8 to 12 incl.
1 3/16	1.1875	11	2 7/8	3	8 to 12 incl.
1 1/4	1.2500	11 1/2	3	4	8 to 12 incl.
1 5/16	1.3125	11 1/2	3	4	10 to 12 incl.
1 3/8	1.3750	12	3 1/4	4	10 to 12 incl.
1 7/16	1.4375	12	3 1/4	4	10 to 12 incl.
1 1/2	1.5000	12 1/2	3 1/2	4	10 to 12 incl.

GENERAL NOTE: Dimensions are in inches.

NOTE:
(1) ASME B5.10 Machine Tapers

Copyright ASME International
Provided by IHS under license with ASME
No reproduction or networking permitted without license from IHS Not for Resale

TOLERANCES FOR TABLE 17

Element	Range	Direction	Tolerance
Diameter of reamer	1/4	Plus	0.0001 to 0.0004
	Over 1/4 to 1 incl.	Plus	0.0001 to 0.0005
	Over 1	Plus	0.0002 to 0.0006
Length overall (*A*)	1/4 to 1 incl.	Plus or minus	1/16
	1 1/16 to 1 1/2 incl.	Plus or minus	3/32
Length of flute (*B*)	1/4 to 1 incl.	Plus or minus	1/16
	1 1/16 to 1 1/2 incl.	Plus or minus	3/32

GENERAL NOTES:
(a) Dimensions are in inches.
(b) These reamers are end cutting on the chamfer and the relief on the outside diameter is ground in back of the margin for the full length of the land.
(c) Number of flutes may vary in accordance with manufacturer's standard practice but must fall within the range specified in the table.

Copyright ASME International
Provided by IHS under license with ASME
No reproduction or networking permitted without license from IHS
Not for Resale

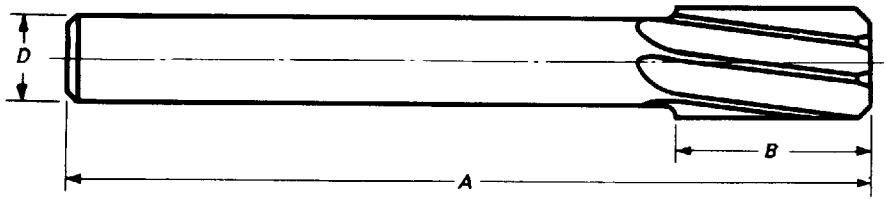

TABLE 18 STRAIGHT SHANK CHUCKING REAMERS WITH HELICAL FLUTES — RIGHT- OR LEFT-HAND HELIX — RIGHT-HAND CUT — HIGH-SPEED STEEL

Diameter of Reamer		Dimensions				
				Diameter of Shank *D*		
Fractional	Decimal Equivalent	Length Overall *A*	Length of Flute *B*	Max.	Min.	Number of Flutes
1/16	0.0625	2 1/2	1/2	0.0585	0.0575	4
5/64	0.0781	3	3/4	0.0720	0.0710	4
3/32	0.0938	3	3/4	0.0880	0.0870	4
7/64	0.1094	3 1/2	7/8	0.1030	0.1020	4 to 6 incl.
1/8	0.1250	3 1/2	7/8	0.1190	0.1180	4 to 6 incl.
9/64	0.1406	4	1	0.1350	0.1340	4 to 6 incl.
5/32	0.1562	4	1	0.1510	0.1500	4 to 6 incl.
11/64	0.1719	4 1/2	1 1/8	0.1645	0.1635	4 to 6 incl.
3/16	0.1875	4 1/2	1 1/8	0.1805	0.1795	4 to 6 incl.
13/64	0.2031	5	1 1/4	0.1945	0.1935	4 to 6 incl.
7/32	0.2188	5	1 1/4	0.2075	0.2065	4 to 6 incl.
15/64	0.2344	6	1 1/2	0.2265	0.2255	4 to 6 incl.
1/4	0.2500	6	1 1/2	0.2405	0.2395	4 to 6 incl.
17/64	0.2656	6	1 1/2	0.2485	0.2475	4 to 6 incl.
9/32	0.2812	6	1 1/2	0.2485	0.2475	4 to 6 incl.
19/64	0.2969	6	1 1/2	0.2792	0.2782	4 to 6 incl.
5/16	0.3125	6	1 1/2	0.2792	0.2782	4 to 6 incl.
21/64	0.3281	6	1 1/2	0.2792	0.2782	4 to 6 incl.
11/32	0.3438	6	1 1/2	0.2792	0.2782	4 to 6 incl.
23/64	0.3594	7	1 3/4	0.3105	0.3095	4 to 6 incl.
3/8	0.3750	7	1 3/4	0.3105	0.3095	4 to 6 incl.
25/64	0.3906	7	1 3/4	0.3105	0.3095	4 to 6 incl.
13/32	0.4062	7	1 3/4	0.3105	0.3095	4 to 6 incl.
27/64	0.4219	7	1 3/4	0.3730	0.3720	6 to 8 incl.
7/16	0.4375	7	1 3/4	0.3730	0.3720	6 to 8 incl.
29/64	0.4531	7	1 3/4	0.3730	0.3720	6 to 8 incl.
15/32	0.4688	7	1 3/4	0.3730	0.3720	6 to 8 incl.
31/64	0.4844	8	2	0.4355	0.4345	6 to 8 incl.
1/2	0.5000	8	2	0.4355	0.4345	6 to 8 incl.
17/32	0.5312	8	2	0.4355	0.4345	6 to 8 incl.
9/16	0.5625	8	2	0.4355	0.4345	6 to 8 incl.
19/32	0.5938	8	2	0.4355	0.4345	6 to 8 incl.

(Table 18 continues on next page)

Copyright ASME International
Provided by IHS under license with ASME
No reproduction or networking permitted without license from IHS
Not for Resale

TABLE 18 STRAIGHT SHANK CHUCKING REAMERS WITH HELICAL FLUTES — RIGHT- OR LEFT-HAND HELIX — RIGHT-HAND CUT — HIGH-SPEED STEEL (CONT'D)

Diameter of Reamer		Dimensions				
				Diameter of Shank *D*		
Fractional	Decimal Equivalent	Length Overall *A*	Length of Flute *B*	Max.	Min.	Number of Flutes
5/8	0.6250	9	2 1/4	0.5620	0.5605	6 to 8 incl.
21/32	0.6562	9	2 1/4	0.5620	0.5605	6 to 8 incl.
11/16	0.6875	9	2 1/4	0.5620	0.5605	6 to 8 incl.
23/32	0.7188	9	2 1/4	0.5620	0.5605	6 to 8 incl.
3/4	0.7500	9 1/2	2 1/2	0.6245	0.6230	6 to 8 incl.
25/32	0.7812	9 1/2	2 1/2	0.6245	0.6230	8 to 10 incl.
13/16	0.8125	9 1/2	2 1/2	0.6245	0.6230	8 to 10 incl.
27/32	0.8438	9 1/2	2 1/2	0.6245	0.6230	8 to 10 incl.
7/8	0.8750	10	2 5/8	0.7495	0.7480	8 to 10 incl.
29/32	0.9062	10	2 5/8	0.7495	0.7480	8 to 10 incl.
15/16	0.9375	10	2 5/8	0.7495	0.7480	8 to 10 incl.
31/32	0.9688	10	2 5/8	0.7495	0.7480	8 to 10 incl.
1	1.0000	10 1/2	2 3/4	0.8745	0.8730	8 to 12 incl.
1 1/16 [Note (1)]	1.0625	10 1/2	2 3/4	0.8745	0.8730	8 to 12 incl.
1 1/8 [Note (1)]	1.1250	11	2 7/8	0.8745	0.8730	8 to 12 incl.
1 3/16 [Note (1)]	1.1875	11	2 7/8	0.9995	0.9980	8 to 12 incl.
1 1/4 [Note (1)]	1.2500	11 1/2	3	0.9995	0.9980	8 to 12 incl.
1 5/16 [Note (1)]	1.3125	11 1/2	3	0.9995	0.9980	10 to 12 incl.
1 3/8 [Note (1)]	1.3750	12	3 1/4	0.9995	0.9980	10 to 12 incl.
1 7/16 [Note (1)]	1.4375	12	3 1/4	1.2495	1.2480	10 to 12 incl.
1 1/2 [Note (1)]	1.5000	12 1/2	3 1/2	1.2495	1.2480	10 to 12 incl.

GENERAL NOTE: Dimensions are in inches.

NOTE:
(1) Right-hand helix only.

TOLERANCES FOR TABLE 18

Element	Range	Direction	Tolerance
Diameter of reamer	Up to 1/4 incl.	Plus	0.0001 to 0.0004
	Over 1/4 to 1 incl.	Plus	0.0001 to 0.0005
	Over 1	Plus	0.0002 to 0.0006
Length overall (*A*)	1/16 to 1 incl.	Plus or minus	1/16
	1 1/16 to 1 1/2 incl.	Plus or minus	3/32
Length of flute (*B*)	1/16 to 1 incl.	Plus or minus	1/16
	1 1/16 to 1 1/2 incl.	Plus or minus	3/32

GENERAL NOTES:
(a) Dimensions are in inches.
(b) These reamers are end cutting on the chamfer and the relief on the outside diameter is ground in back of the margin for the full length of the land.
(c) Number of flutes may vary in accordance with manufacturer's standard practice but must fall within the range specified in the table.

Copyright ASME International
Provided by IHS under license with ASME
No reproduction or networking permitted without license from IHS
Not for Resale

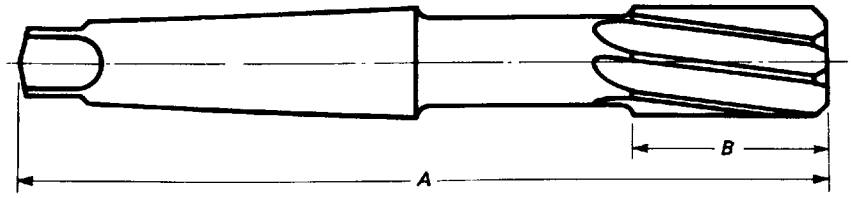

TABLE 19 TAPER SHANK CHUCKING REAMERS WITH HELICAL FLUTES — RIGHT-HAND HELIX — RIGHT-HAND CUT — HIGH-SPEED STEEL

Diameter of Reamer		Dimensions			
Fractional	Decimal Equivalent	Length Overall *A*	Length of Flute *B*	Number of Morse Taper Shank [Note (1)]	Number of Flutes
1/4	0.2500	6	1 1/2	1	4 to 6 incl.
5/16	0.3125	6	1 1/2	1	4 to 6 incl.
3/8	0.3750	7	1 3/4	1	4 to 6 incl.
7/16	0.4375	7	1 3/4	1	6 to 8 incl.
1/2	0.5000	8	2	1	6 to 8 incl.
17/32	0.5312	8	2	1	6 to 8 incl.
9/16	0.5625	8	2	1	6 to 8 incl.
19/32	0.5938	8	2	1	6 to 8 incl.
5/8	0.6250	9	2 1/4	2	6 to 8 incl.
21/32	0.6562	9	2 1/4	2	6 to 8 incl.
11/16	0.6875	9	2 1/4	2	6 to 8 incl.
23/32	0.7188	9	2 1/4	2	6 to 8 incl.
3/4	0.7500	9 1/2	2 1/2	2	6 to 8 incl.
25/32	0.7812	9 1/2	2 1/2	2	8 to 10 incl.
13/16	0.8125	9 1/2	2 1/2	2	8 to 10 incl.
27/32	0.8438	9 1/2	2 1/2	2	8 to 10 incl.
7/8	0.8750	10	2 5/8	2	8 to 10 incl.
29/32	0.9062	10	2 5/8	2	8 to 10 incl.
15/16	0.9375	10	2 5/8	3	8 to 10 incl.
31/32	0.9688	10	2 5/8	3	8 to 10 incl.
1	1.0000	10 1/2	2 3/4	3	8 to 12 incl.
1 1/16	1.0625	10 1/2	2 3/4	3	8 to 12 incl.
1 1/8	1.1250	11	2 7/8	3	8 to 12 incl.
1 3/16	1.1875	11	2 7/8	3	8 to 12 incl.
1 1/4	1.2500	11 1/2	3	4	8 to 12 incl.
1 5/16	1.3125	11 1/2	3	4	10 to 12 incl.
1 3/8	1.3750	12	3 1/4	4	10 to 12 incl.
1 7/16	1.4375	12	3 1/4	4	10 to 12 incl.
1 1/2	1.5000	12 1/2	3 1/2	4	10 to 12 incl.

GENERAL NOTE: Dimensions are in inches.

NOTE:
(1) ASME B5.10 Machine Tapers

Copyright ASME International
Provided by IHS under license with ASME
No reproduction or networking permitted without license from IHS
Not for Resale

TOLERANCES FOR TABLE 19

Element	Range	Direction	Tolerance
Diameter of reamer	1/4	Plus	0.0001 to 0.0004
	Over 1/4 to 1 incl.	Plus	0.0001 to 0.0005
	Over 1	Plus	0.0002 to 0.0006
Length overall (*A*)	1/4 to 1 incl.	Plus or minus	1/16
	1 1/16 to 1 1/2 incl.	Plus or minus	3/32
Length of flute (*B*)	1/14 to 1 incl.	Plus or minus	1/16
	1 1/16 to 1 1/2 incl.	Plus or minus	3/32

GENERAL NOTES:
(a) Dimensions are in inches.
(b) These reamers are end cutting on the chamfer and the relief on the outside diameter is ground in back of the margin for the full length of the land.
(c) Number of flutes may vary in accordance with manufacturer's standard practice but must fall within the range specified in the table.

Copyright ASME International
Provided by IHS under license with ASME
No reproduction or networking permitted without license from IHS

Not for Resale

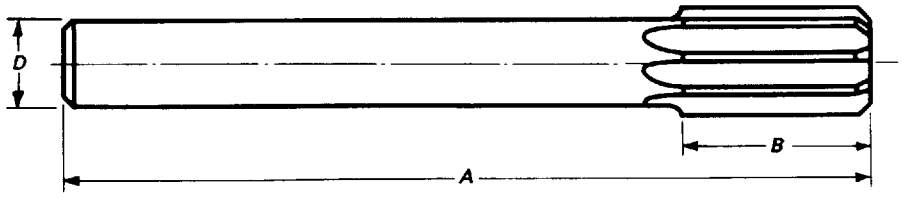

TABLE 20 STRAIGHT SHANK ROSE CHUCKING REAMERS WITH STRAIGHT FLUTES — HIGH-SPEED STEEL

Diameter of Reamer		Dimensions				
				Diameter of Shank *D*		
Fractional	Decimal Equivalent	Length Overall *A*	Length of Flute *B*	Max.	Min.	Number of Flutes
1/8	0.1250	3 1/2	7/8	0.1190	0.1180	4 to 6 incl.
3/16	0.1875	4 1/2	1 1/8	0.1805	0.1795	4 to 6 incl.
1/4	0.2500	6	1 1/2	0.2405	0.2395	4 to 6 incl.
5/16	0.3125	6	1 1/2	0.2792	0.2782	4 to 6 incl.
3/8	0.3750	7	1 3/4	0.3105	0.3095	4 to 6 incl.
7/16	0.4375	7	1 3/4	0.3730	0.3720	6 to 8 incl.
1/2	0.5000	8	2	0.4355	0.4345	6 to 8 incl.

GENERAL NOTE: Dimensions are in inches.

TOLERANCES FOR TABLE 20

Element	Range	Direction	Tolerance
Diameter of reamer	Up to 1/4 incl. Over 1/4 to 1/2 incl.	Plus Plus	0.0001 to 0.0004 0.0001 to 0.0005
Length overall (*A*)	1/8 to 1/2 incl.	Plus or minus	1/16
Length of flute (*B*)	1/8 to 1/2 incl.	Plus or minus	1/16

GENERAL NOTES:
(a) Dimensions are in inches.
(b) Lands are not relieved on the periphery but have a relatively large amount of back taper.
(c) Number of flutes may vary in accordance with manufacturer's standard practice but must fall within the range specified in the table.

Copyright ASME International
Provided by IHS under license with ASME
No reproduction or networking permitted without license from IHS
Not for Resale

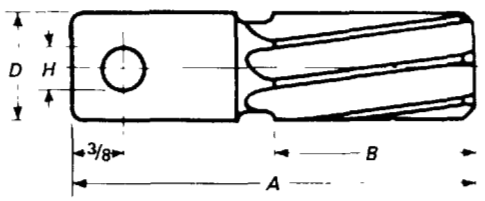

TABLE 21 STUB SCREW MACHINE REAMERS WITH HELICAL FLUTES — HIGH-SPEED STEEL

Series Number	Diameter Range	Dimensions				Number of Flutes
		Length Overall *A*	Length of Flute *B*	Diameter of Shank *D*	Size of Hole *H*	
00	0.0600 to 0.066 incl.	1 3/4	1/2	1/8	1/16	4
0	0.0661 to 0.074 incl.	1 3/4	1/2	1/8	1/16	4
1	0.0741 to 0.084 incl.	1 3/4	1/2	1/8	1/16	4
2	0.0841 to 0.096 incl.	1 3/4	1/2	1/8	1/16	4
3	0.0961 to 0.126 incl.	2	3/4	1/8	1/16	4
4	0.1261 to 0.158 incl.	2 1/4	1	1/4	3/32	4
5	0.1581 to 0.188 incl.	2 1/4	1	1/4	3/32	4
6	0.1881 to 0.219 incl.	2 1/4	1	1/4	3/32	6
7	0.2191 to 0.251 incl.	2 1/4	1	1/4	3/32	6
8	0.2511 to 0.282 incl.	2 1/4	1	3/8	1/8	6
9	0.2821 to 0.313 incl.	2 1/4	1	3/8	1/8	6
10	0.3131 to 0.344 incl.	2 1/2	1 1/4	3/8	1/8	6
11	0.3441 to 0.376 incl.	2 1/2	1 1/4	3/8	1/8	6
12	0.3761 to 0.407 incl.	2 1/2	1 1/4	1/2	3/16	6
13	0.4071 to 0.439 incl.	2 1/2	1 1/4	1/2	3/16	6
14	0.4391 to 0.470 incl.	2 1/2	1 1/4	1/2	3/16	6
15	0.4701 to 0.505 incl.	2 1/2	1 1/4	1/2	3/16	6
16	0.5051 to 0.567 incl.	3	1 1/2	5/8	1/4	6
17	0.5671 to 0.630 incl.	3	1 1/2	5/8	1/4	6
18	0.6301 to 0.692 incl.	3	1 1/2	5/8	1/4	6
19	0.6921 to 0.755 incl.	3	1 1/2	3/4	5/16	8
20	0.7551 to 0.817 incl.	3	1 1/2	3/4	5/16	8
21	0.8171 to 0.880 incl.	3	1 1/2	3/4	5/16	8
22	0.8801 to 0.942 incl.	3	1 1/2	3/4	5/16	8
23	0.9421 to 1.010 incl.	3	1 1/2	3/4	5/16	8

GENERAL NOTE: Dimensions are in inches.

Copyright ASME International
Provided by IHS under license with ASME
No reproduction or networking permitted without license from IHS
Not for Resale

TOLERANCES FOR TABLE 21

Element	Range Series Number	Direction	Tolerance
Diameter of reamer	00 to 7 incl. 8 to 23 incl.	Plus Plus	0.0001 to 0.0004 0.0001 to 0.0005
Length overall (*A*)	00 to 23 incl.	Plus or minus	1/16
Length of flute (*B*)	00 to 23 incl.	Plus or minus	1/16
Diameter of shank (*D*)	00 to 23 incl.	Minus	0.0005 to 0.002

GENERAL NOTES:
(a) Dimensions are in inches.
(b) Stub screw machine reamers are designed primarily for use in automatic screw machines and for jobs requiring short tools.
(c) Stub screw machine reamers are particularly adapted for use in floating holders, and the shank is provided with an internal center and a pin hole for this purpose.
(d) These reamers are standard with right-hand cut and left-hand helical flutes in any size within the range shown in the table.

Copyright ASME International
Provided by IHS under license with ASME
No reproduction or networking permitted without license from IHS
Not for Resale

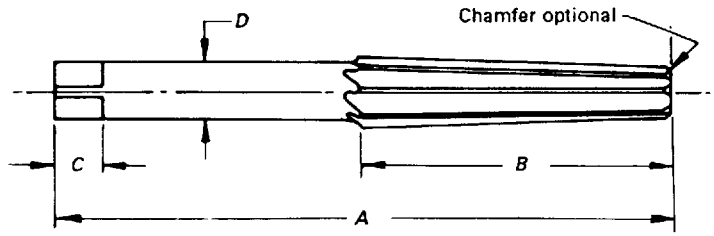

TABLE 22 MORSE TAPER FINISHING REAMERS WITH STRAIGHT FLUTES AND SQUARED SHANK — HIGH-SPEED STEEL

Number of Taper	Dimensions								
	Reamer Diameter (Reference)		Length Overall *A*	Length of Flute *B*	Length of Square *C*	Diameter of Shank *D*	Size of Square	Taper per Foot	Number of Flutes
	Small End	Large End							
0	0.2503	0.3674	3 3/4	2 1/4	5/16	5/16	0.235	0.62460	4 to 6 incl.
1	0.3674	0.5170	5	3	7/16	7/16	0.330	0.59858	6 to 8 incl.
2	0.5696	0.7444	6	3 1/2	5/8	5/8	0.470	0.59941	6 to 8 incl.
3	0.7748	0.9881	7 1/4	4 1/4	7/8	7/8	0.655	0.60235	8 to 10 incl.
4	1.0167	1.2893	8 1/2	5 1/4	1	1 1/8	0.845	0.62326	8 to 10 incl.
5	1.4717	1.8005	9 3/4	6 1/4	1 1/8	1 1/2	1.125	0.63151	10 to 12 incl.

GENERAL NOTE: Dimensions are in inches.

TOLERANCES FOR TABLE 22

Element	Range Size Number	Direction	Tolerance
Length overall (*A*)	0 to 3 incl.	Plus or minus	1/16
	4 to 5 incl.	Plus or minus	3/32
Length of flute (*B*)	0 to 3 incl.	Plus or minus	1/16
	4 to 5 incl.	Plus or minus	3/32
Length of square (*C*)	0 to 3 incl.	Plus or minus	1/32
	4 to 5 incl.	Plus or minus	1/16
Diameter of shank (*D*)	0 to 5 incl.	Minus	0.0005 to 0.002
Size of square	0 to 1 incl.	Minus	0.004
	2 to 3 incl.	Minus	0.006
	4 to 5 incl.	Minus	0.008

GENERAL NOTES:
(a) Dimensions are in inches.
(b) These reamers are designed for use in reaming Morse taper sockets.
(c) Number of flutes may vary in accordance with manufacturer's standard practice but must fall within the range specified in the table.

Copyright ASME International
Provided by IHS under license with ASME
No reproduction or networking permitted without license from IHS
Not for Resale

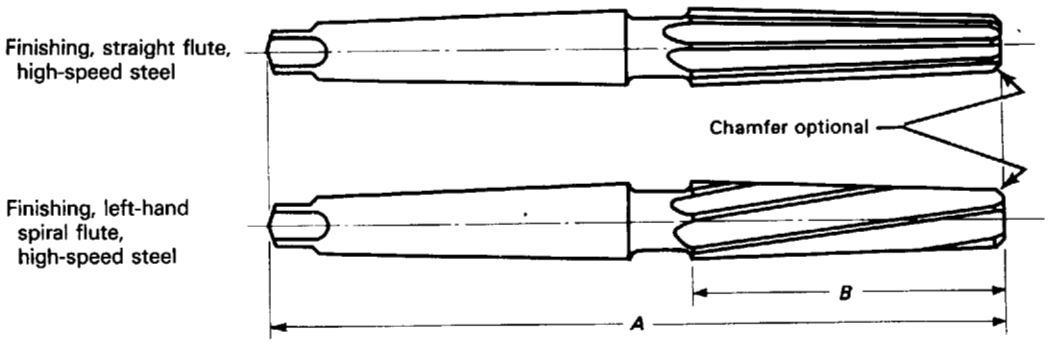

TABLE 23 MORSE TAPER REAMERS WITH MORSE TAPER SHANK

Number of Taper	Dimensions				Number of Morse Taper Shank [Note (1)]	Taper per Foot	Number of Flutes
	Diameter (Reference)		Length Overall *A*	Length of Flute *B*			
	Small End	Large End					
0	0.2503	0.3674	5 11/32	2 1/4	0	0.62460	4 to 6 incl.
1	0.3674	0.5170	6 5/16	3	1	0.59858	6 to 8 incl.
2	0.5696	0.7444	7 3/8	3 1/2	2	0.59941	6 to 8 incl.
3	0.7748	0.9881	8 7/8	4 1/4	3	0.60235	8 to 10 incl.
4	1.0167	1.2893	10 7/8	5 1/4	4	0.62326	8 to 10 incl.
5	1.4717	1.8005	13 1/8	6 1/4	5	0.63151	10 to 12 incl.

GENERAL NOTE: Dimensions are in inches.

NOTE:
(1) ASME B5.10 Machine Tapers

TOLERANCES FOR TABLE 23

Element	Range Size Number	Direction	Tolerance
Length overall (*A*)	0 to 3 incl.	Plus or minus	1/16
	4 to 5 incl.	Plus or minus	3/32
Length of flute (*B*)	0 to 3 incl.	Plus or minus	1/16
	4 to 5 incl.	Plus or minus	3/32

GENERAL NOTES:
(a) Dimensions are in inches.
(b) These reamers are designed for use in reaming Morse taper sockets.
(c) Number of flutes may vary in accordance with manufacturer's standard practice but must fall within the range specified in the table.
(d) Spiral flute reamers are standard with left-hand spiral flutes.

Copyright ASME International
Provided by IHS under license with ASME
No reproduction or networking permitted without license from IHS
Not for Resale

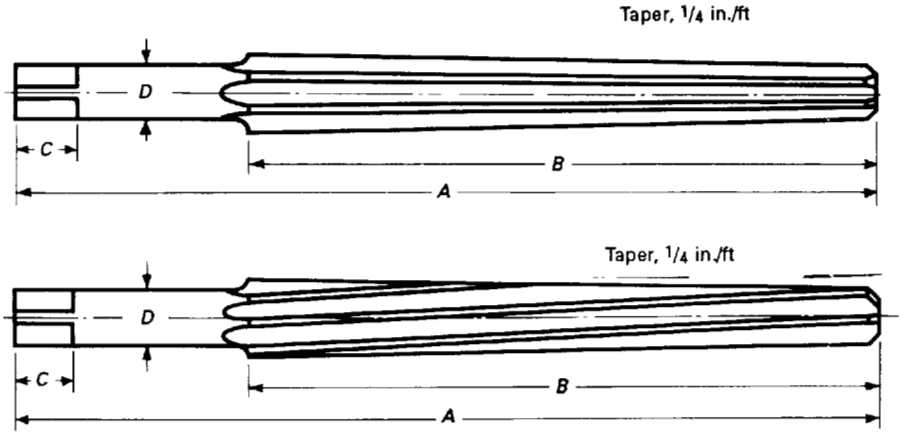

TABLE 24 TAPER PIN REAMERS WITH STRAIGHT FLUTES AND SQUARED SHANK — CARBON STEEL, HIGH-SPEED STEEL
TAPER PIN REAMERS WITH LEFT-HAND SPIRAL FLUTES AND SQUARED SHANK — HIGH-SPEED STEEL

Size	Dimensions							Number of Flutes
	Diameter (Reference)		Length Overall *A*	Length of Flute *B*	Length of Square *C*	Diameter of Shank *D*	Size of Square	
	Small End	Large End						
7/0	0.0497	0.0666	1 13/16	13/16	5/32	5/64	0.060	3 or 4
6/0	0.0611	0.0806	1 15/16	15/16	5/32	3/32	0.070	3 or 4
5/0	0.0719	0.0966	2 3/16	1 3/16	5/32	7/64	0.080	3 or 4
4/0	0.0869	0.1142	2 5/16	1 5/16	5/32	1/8	0.095	3 or 4
3/0	0.1029	0.1302	2 5/16	1 5/16	5/32	9/64	0.105	4 to 6 incl.
2/0	0.1137	0.1462	2 9/16	1 9/16	7/32	5/32	0.115	4 to 6 incl.
0	0.1287	0.1638	2 15/16	1 11/16	7/32	11/64	0.130	4 to 6 incl.
1	0.1447	0.1798	2 15/16	1 11/16	7/32	3/16	0.140	5 or 6
2	0.1605	0.2008	3 3/16	1 15/16	1/4	13/64	0.150	5 or 6
3	0.1813	0.2294	3 11/16	2 5/16	1/4	15/64	0.175	5 or 6
4	0.2071	0.2604	4 1/16	2 9/16	1/4	17/64	0.200	5 or 6
5	0.2409	0.2994	4 5/16	2 13/16	5/16	5/16	0.235	5 or 6
6	0.2773	0.3540	5 7/16	3 11/16	3/8	23/64	0.270	6 to 8 incl.
7	0.3297	0.4220	6 5/16	4 7/16	3/8	13/32	0.305	6 to 8 incl.
8	0.3971	0.5050	7 3/16	5 3/16	7/16	7/16	0.330	6 to 8 incl.
9	0.4805	0.6066	8 5/16	6 1/16	9/16	9/16	0.420	6 to 8 incl.
10	0.5799	0.7216	9 5/16	6 13/16	5/8	5/8	0.470	7 or 8

GENERAL NOTE: Dimensions are in inches.

Copyright ASME International
Provided by IHS under license with ASME
No reproduction or networking permitted without license from IHS
Not for Resale

TOLERANCES FOR TABLE 24

Element		Range Size Number	Direction	Tolerance
Length overall	(*A*)	7/8 to 10 incl.	Plus or minus	1/16
Length of flute	(*B*)	7/8 to 10 incl.	Plus or minus	1/16
Length of square	(*C*)	7/8 to 10 incl.	Plus or minus	1/32
Diameter of shank	(*D*)	7/8 to 10 incl.	Minus	0.001 to 0.005
Size of square		7/8 to 7 incl. 8 to 10 incl.	Minus Minus	0.004 0.006

GENERAL NOTES:
(a) Dimensions are in inches.
(b) Number of flutes may vary in accordance with manufacturer's standard practice but must fall within the range specified in the table.

Copyright ASME International
Provided by IHS under license with ASME
No reproduction or networking permitted without license from IHS
Not for Resale

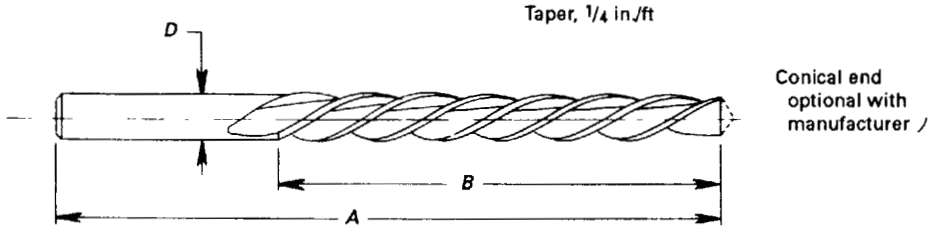

TABLE 25 TAPER PIN REAMERS WITH HIGH-SPIRAL FLUTES — HIGH-SPEED STEEL

Size	Dimensions					Number of Flutes
	Diameter (Reference)		Length Overall *A*	Length of Flute *B*	Diameter of Shank *D*	
	Small End	Large End				
8/0	0.0351	0.0514	1 5/8	25/32	1/16	2 or 3
7/0	0.0497	0.0666	1 13/16	13/16	5/64	2 or 3
6/0	0.0611	0.0806	1 15/16	15/16	3/32	2 or 3
5/0	0.0719	0.0966	2 3/16	1 3/16	7/64	2 or 3
4/0	0.0869	0.1142	2 5/16	1 5/16	1/8	2 or 3
3/0	0.1029	0.1302	2 5/16	1 5/16	9/64	2 or 3
2/0	0.1137	0.1462	2 9/16	1 9/16	5/32	2 or 3
0	0.1287	0.1638	2 15/16	1 11/16	11/64	2 or 3
1	0.1447	0.1798	2 15/16	1 11/16	3/16	2 or 3
2	0.1605	0.2008	3 3/16	1 15/16	13/64	2 or 3
3	0.1813	0.2294	3 11/16	2 5/16	15/64	2 or 3
4	0.2071	0.2604	4 1/16	2 9/16	17/64	2 or 3
5	0.2409	0.2994	4 5/16	2 13/64	5/16	2 or 3
6	0.2773	0.3540	5 7/16	3 11/16	23/64	2 or 3
7	0.3297	0.4220	6 5/16	4 7/16	13/32	2 or 3
8	0.3971	0.5050	7 3/16	5 3/16	7/16	2 or 3
9	0.4805	0.6066	8 5/16	6 1/16	9/16	2 to 4 incl.
10	0.5799	0.7216	9 5/16	6 13/16	5/8	2 to 4 incl.

GENERAL NOTE: Dimensions are in inches.

TOLERANCES FOR TABLE 25

Element		Range Size Number	Direction	Tolerance
Length overall	(*A*)	8/0 to 10 incl.	Plus or minus	1/16
Length of flute	(*B*)	8/0 to 10 incl.	Plus or minus	1/16
Diameter of shank	(*D*)	8/0 to 10 incl.	Minus	0.0005 to 0.002

GENERAL NOTES:
(a) Dimensions are in inches.
(b) These reamers are designed especially for machine reaming.
(c) These reamers are standard with plain, round shank.
(d) These reamers are standard with left-hand spiral flutes.
(e) Number of flutes may vary in accordance with manufacturer's standard practice but must fall within the range specified in the table.

Copyright ASME International
Provided by IHS under license with ASME
No reproduction or networking permitted without license from IHS
Not for Resale

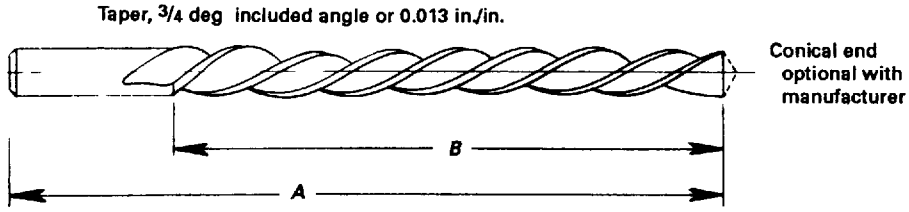

TABLE 26 DIE MAKER'S REAMERS WITH HIGH-SPIRAL FLUTES — HIGH-SPEED STEEL

Letter Size	Dimensions				
	Diameter (Reference)		Length Overall *A*	Length of Flute *B*	Number of Flutes
	Small End	Large End			
AAA	0.055	0.070	2 1/4	1 1/8	2 or 3
AA	0.065	0.080	2 1/4	1 1/8	2 or 3
A	0.075	0.090	2 1/4	1 1/8	2 or 3
B	0.085	0.103	2 3/8	1 3/8	2 or 3
C	0.095	0.113	2 1/2	1 3/8	2 or 3
D	0.105	0.126	2 5/8	1 5/8	2 or 3
E	0.115	0.136	2 3/4	1 5/8	2 or 3
F	0.125	0.148	3	1 3/4	2 or 3
G	0.135	0.158	3	1 3/4	2 or 3
H	0.145	0.169	3 1/4	1 7/8	2 or 3
I	0.160	0.184	3 1/4	1 7/8	2 or 3
J	0.175	0.199	3 1/4	1 7/8	2 or 3
K	0.190	0.219	3 1/2	2 1/4	2 or 3
L	0.205	0.234	3 1/2	2 1/4	2 or 3
M	0.220	0.252	4	2 1/2	2 or 3
N	0.235	0.274	4 1/2	3	2 or 3
O	0.250	0.296	5	3 1/2	2 or 3
P	0.275	0.327	5 1/2	4	2 or 3
Q	0.300	0.358	6	4 1/2	2 or 3
R	0.335	0.397	6 1/2	4 3/4	2 or 3
S	0.370	0.435	6 3/4	5	2 or 3
T	0.405	0.473	7	5 1/4	2 or 3
U	0.440	0.511	7 1/4	5 1/2	2 or 3

GENERAL NOTE: Dimensions are in inches.

TOLERANCES FOR TABLE 26

Element	Range Letter Size	Direction	Tolerance
Length overall (*A*)	AAA to U incl.	Plus or minus	1/16
Length of flute (*B*)	AAA to U incl.	Plus or minus	1/16

GENERAL NOTES:
(a) Dimensions are in inches.
(b) These reamers are designed for use in die making.
(c) These reamers are standard with left-hand spiral flutes.

Copyright ASME International
Provided by IHS under license with ASME
No reproduction or networking permitted without license from IHS
Not for Resale

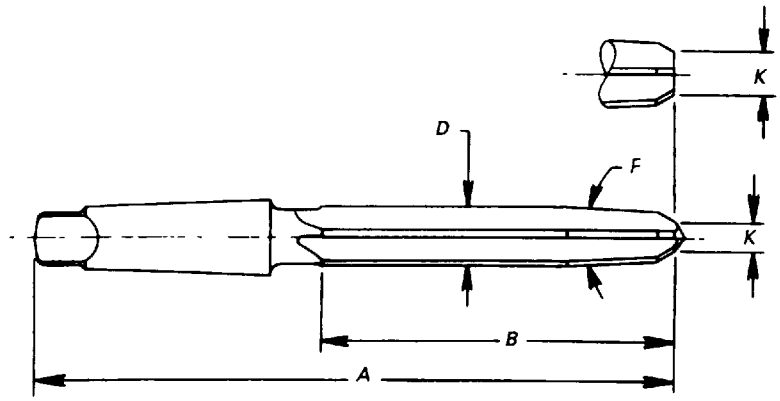

TABLE 27 TAPER SHANK BRIDGE REAMERS WITH STRAIGHT FLUTES — HIGH-SPEED STEEL

Diameter of Reamer *D*	Dimensions			Approximate Included Angle of Taper Flute, deg *F*	Number of Morse Taper Shank [Note (1)]	Number of Flutes
	Length Overall *A*	Length of Flute *B*	Diameter of Small End *K*			
7/16	8 1/4	4 3/8	1/4	6	2	4 or 5
9/16	9	5 1/8	11/32	6	2	4 or 5
11/16	11 3/4	7 1/8	25/64	6	3	4 or 5
13/16	12	7 3/8	1/2	6	3	4 or 5
15/16	12	7 3/8	5/8	6	3	4 or 5
1 1/16	12	7 3/8	3/4	6	3	4 to 6 incl.
1 3/16	12	7 3/8	7/8	6	3	4 to 6 incl.
1 5/16	13	7 3/8	1	6	4	4 to 7 incl.

GENERAL NOTE: Dimensions are in inches.

NOTE:
(1) ASME B5.10 Machine Tapers

TOLERANCES FOR TABLE 27

Element		Range	Direction	Tolerance
Diameter of reamer	(*D*)	7/16 to 1 5/16 incl.	Plus	0.000 to 0.010
Length overall	(*A*)	7/16 to 1 5/16 incl.	Plus or minus	1/8
Length of flute	(*B*)	7/16 to 1 5/16 incl.	Plus or minus	1/4

GENERAL NOTES:
(a) Dimensions are in inches.
(b) Bridge reamers are particularly adapted for reaming rivet and bolt holes in structural iron and steel, boiler plate, etc.
(c) They are tapered at the point to facilitate entering holes which are out of alignment.
(d) Number of flutes may vary in accordance with manufacturer's standard practice but must fall within the range specified in the table.

Copyright ASME International
Provided by IHS under license with ASME
No reproduction or networking permitted without license from IHS
Not for Resale

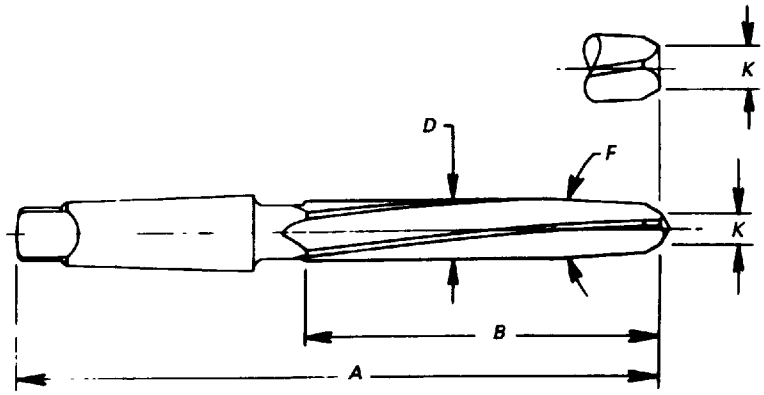

TABLE 28 TAPER SHANK BRIDGE REAMERS WITH HELICAL FLUTES — HIGH-SPEED STEEL

Diameter of Reamer *D*	Dimensions			Approximate Included Angle of Taper Flute, deg *F*	Number of Morse Taper Shank [Note (1)]	Number of Flutes
	Length Overall *A*	Length of Flute *B*	Diameter of Small End *K*			
7/16	8 1/4	4 3/8	1/4	6	2	4 or 5
1/2	9	5 1/8	9/32	6	2	4 or 5
9/16	9	5 1/8	11/32	6	2	4 or 5
5/8	10	6 1/8	3/8	6	2	4 or 5
11/16	11 3/4	7 1/8	25/64	6	3	4 or 5
3/4	12	7 3/8	7/16	6	3	4 or 5
13/16	12	7 3/8	1/2	6	3	4 or 5
7/8	12	7 3/8	9/16	6	3	4 or 5
15/16	12	7 3/8	5/8	6	3	4 or 5
1	12	7 3/8	11/16	6	3	4 to 6 incl.
1 1/16	12	7 3/8	3/4	6	3	4 to 6 incl.
1 1/8	12	7 3/8	13/16	6	3	4 to 6 incl.
1 3/16	12	7 3/8	7/8	6	3	4 to 6 incl.
1 1/4	13	7 3/8	15/16	6	4	4 to 6 incl.
1 5/16	13	7 3/8	1	6	4	4 to 6 incl.

GENERAL NOTE: Dimensions are in inches.

NOTE:
(1) ASME B5.10 Machine Tapers

Copyright ASME International
Provided by IHS under license with ASME
No reproduction or networking permitted without license from IHS
Not for Resale

TOLERANCES FOR TABLE 28

Element		Range	Direction	Tolerance
Diameter of reamer	(*D*)	7/16 to 1 5/16 incl.	Plus	0.000 to 0.010
Length overall	(*A*)	7/16 to 1 5/16 incl.	Plus or minus	1/8
Length of flute	(*B*)	7/16 to 1 5/16 incl.	Plus or minus	1/4

GENERAL NOTES:
(a) Dimensions are in inches.
(b) Bridge reamers are particularly adapted for reaming rivet and bolt holes in structural iron and steel, boiler plate, etc.
(c) They are tapered at the point to facilitate entering holes which are out of alignment.
(d) These reamers are standard with left-hand helical flutes.
(e) Number of flutes may vary in accordance with manufacturer's standard practice but must fall within the range specified in the table.

Copyright ASME International
Provided by IHS under license with ASME
No reproduction or networking permitted without license from IHS
Not for Resale

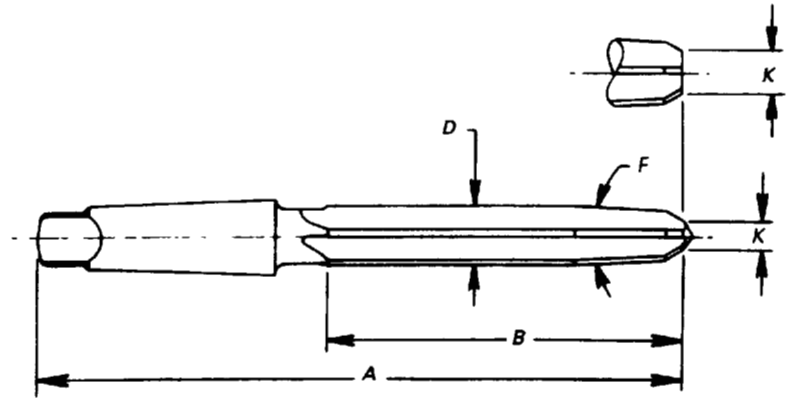

TABLE 29 TAPER SHANK CAR REAMERS WITH STRAIGHT FLUTES — HIGH-SPEED STEEL

Diameter of Reamer *D*	Dimensions			Approximate Included Angle of Taper Flute, deg *F*	Number of Morse Taper Shank [Note (1)]	Number of Flutes
	Length Overall *A*	Length of Flute *B*	Diameter of Small End *K*			
7/16	6 15/16	3 1/2	1/4	6	2	4 or 5
9/16	7 9/16	4	9/32	8	2	4 or 5
11/16	8 13/16	4 1/2	3/8	8	3	4 or 5
13/16	9 1/2	5	15/32	8	3	4 or 5
15/16	9 1/2	5	19/32	8	3	4 or 5

GENERAL NOTE: Dimensions are in inches.

NOTE:
(1) ASME B5.10 Machine Tapers

TOLERANCES FOR TABLE 29

Element		Range	Direction	Tolerance
Diameter of reamer	(*D*)	7/16 to 15/16 incl.	Plus	0.000 to 0.010
Length overall	(*A*)	7/16 to 15/16 incl.	Plus or minus	1/8
Length of flute	(*B*)	7/16 to 15/16 incl.	Plus or minus	1/4

GENERAL NOTES:
(a) Dimensions are in inches.
(b) Car reamers are similar in construction to bridge reamers. They are particularly adapted for reaming rivet and bolt holes in thin structural sections.
(c) They are tapered at the point to facilitate entering holes which are out of alignment.
(d) Number of flutes may vary in accordance with manufacturer's standard practice but must fall within the range specified in the table.

Copyright ASME International
Provided by IHS under license with ASME
No reproduction or networking permitted without license from IHS
Not for Resale

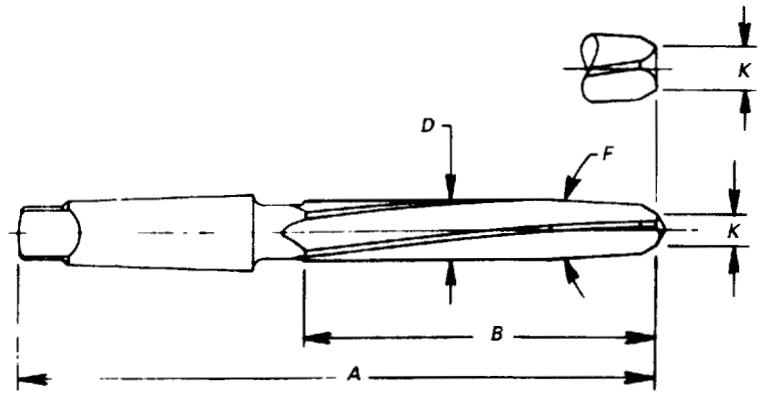

TABLE 30 TAPER SHANK CAR REAMERS WITH HELICAL FLUTES — HIGH-SPEED STEEL

Diameter of Reamer *D*	Dimensions			Approximate Included Angle of Taper Flute, deg *F*	Number of Morse Taper Shank [Note (1)]	Number of Flutes
	Length Overall *A*	Length of Flute *B*	Diameter of Small End *K*			
5/16	5 11/16	2 3/4	11/64	6	1	4 or 5
3/8	5 11/16	2 3/4	15/64	6	1	4 or 5
7/16	6 15/16	3 1/2	1/4	6	2	4 or 5
1/2	7 9/16	4	19/64	6	2	4 or 5
9/16	7 9/16	4	9/32	8	2	4 or 5
5/8	8 1/16	4 1/2	5/16	8	2	4 or 5
11/16	8 13/16	4 1/2	3/8	8	3	4 or 5
3/4	9 1/2	5	13/32	8	3	4 or 5
13/16	9 1/2	5	15/32	8	3	4 or 5
15/16	9 1/2	5	19/32	8	3	4 or 5

GENERAL NOTE: Dimensions are in inches.

NOTE:
(1) ASME B5.10 Machine Tapers

TOLERANCES FOR TABLE 30

Element		Range	Direction	Tolerance
Diameter of reamer	(*D*)	5/16 to 15/16 incl.	Plus	0.000 to 0.010
Length overall	(*A*)	5/16 to 15/16 incl.	Plus or minus	1/8
Length of flute	(*B*)	5/16 to 15/16 incl.	Plus or minus	1/4

GENERAL NOTES:
(a) Dimensions are in inches.
(b) Car reamers are similar in construction to bridge reamers. They are particularly adapted for reaming rivet and bolt holes in thin structural sections.
(c) They are tapered at the point to facilitate entering holes which are out of alignment.
(d) These reamers are standard with left-hand helical flutes.
(e) Number of flutes may vary in accordance with manufacturer's standard practice but must fall within the range specified in the table.

Copyright ASME International
Provided by IHS under license with ASME
No reproduction or networking permitted without license from IHS

Not for Resale

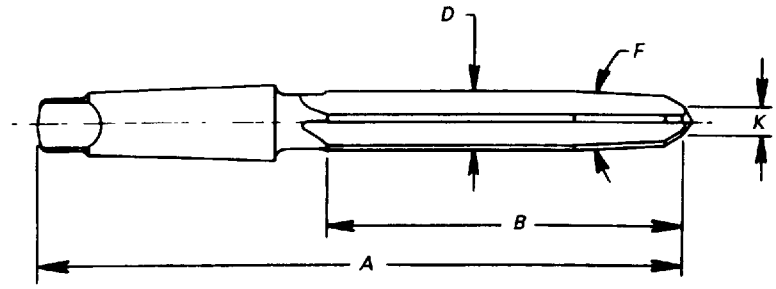

TABLE 31 TAPER SHANK STRUCTURAL REAMERS WITH THREE HELICAL FLUTES — HIGH-SPEED STEEL

Diameter of Reamer *D*	Dimensions			Approximate Included Angle of Taper Flute, deg *F*	Number of Morse Taper Shank [Note (1)]
	Length Overall *A*	Length of Flute *B*	Diameter of Small End *K*		
11/16	11 3/4	7 1/8	3/8	6	3
13/16	12	7 3/8	7/16	7	3
15/16	12	7 3/8	1/2	7	3
1 1/16	12	7 3/8	17/32	8	3

GENERAL NOTE: Dimensions are in inches.

NOTE:
(1) ASME B5.10 Machine Tapers

TOLERANCES FOR TABLE 31

Element		Range	Direction	Tolerance
Diameter of reamer	(*D*)	11/16 to 1 1/16 incl.	Plus	0.000 to 0.010
Length overall	(*A*)	11/16 to 1 1/16 incl.	Plus or minus	1/8
Length of flute	(*B*)	11/16 to 1 1/16 incl.	Plus or minus	1/4

GENERAL NOTES:
(a) Dimensions are in inches.
(b) Structural reamers are particularly adapted for heavy-duty reaming as encountered in the fabrication of structural steel assemblies.
(c) They are tapered at the point to facilitate entering holes which are out of alignment.
(d) These reamers are standard with right-hand cut and right-hand helical flutes.

Copyright ASME International
Provided by IHS under license with ASME
No reproduction or networking permitted without license from IHS
Not for Resale

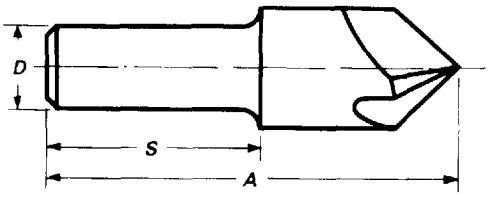

TABLE 32 STRAIGHT SHANK CENTER REAMERS (SHORT COUNTERSINKS) — HIGH-SPEED STEEL

Diameter of Cut	Dimensions			Number of Flutes
	Approximate Length Overall *A*	Diameter of Shank *D*	Length of Shank *S*	
1/4	1 1/2	3/16	3/4	3 or 4
3/8	1 3/4	1/4	7/8	3 or 4
1/2	2	3/8	1	3 or 4
5/8	2 1/4	3/8	1	3 or 4
3/4	2 5/8	1/2	1 1/4	3 or 4

GENERAL NOTE: Dimensions are in inches.

TOLERANCES FOR TABLE 32

Element		Range	Direction	Tolerance
Length overall	(*A*)	1/4 to 3/8 incl. 1/2 to 3/4 incl.	Plus or minus Plus or minus	1/8 3/16
Diameter of shank	(*D*)	1/4 to 3/4 incl.	Minus	0.0005 to 0.002
Length of shank	(*S*)	1/4 to 3/4 incl.	Plus or minus	1/16

GENERAL NOTES:
(a) Dimensions are in inches.
(b) Center reamers are standard with either 60, 82, 90, or 100 deg included angle.
(c) Number of flutes may vary in accordance with manufacturer's standard practice but must fall within the range specified in the table.

Copyright ASME International
Provided by IHS under license with ASME
No reproduction or networking permitted without license from IHS
Not for Resale

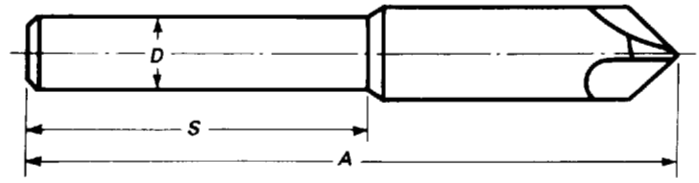

TABLE 33 STRAIGHT SHANK MACHINE COUNTERSINKS — HIGH-SPEED STEEL

Diameter of Cut	Dimensions			Number of Flutes
	Approximate Length Overall *A*	Diameter of Shank *D*	Length of Shank *S*	
1/2	3 7/8	1/2	2 1/4	3 or 4
5/8	4	1/2	2 1/4	3 or 4
3/4	4 1/8	1/2	2 1/4	3 or 4
7/8	4 1/4	1/2	2 1/4	3 or 4
1	4 3/8	1/2	2 1/4	3 or 4

GENERAL NOTE: Dimensions are in inches.

TOLERANCES FOR TABLE 33

Element		Range	Direction	Tolerance
Length overall	(*A*)	1/2 to 5/8 incl. 3/4 to 1 incl.	Plus or minus Plus or minus	1/8 3/16
Diameter of shank	(*D*)	1/2 to 1 incl.	Minus	0.0005 to 0.002
Length of shank	(*S*)	1/2 to 1 incl.	Plus or minus	1/16

GENERAL NOTES:
(a) Dimensions are in inches.
(b) Machine countersinks are standard with either 60 or 82 deg included angle.
(c) Number of flutes may vary in accordance with manufacturer's standard practice but must fall within the range specified in the table.

Copyright ASME International
Provided by IHS under license with ASME
No reproduction or networking permitted without license from IHS
Not for Resale

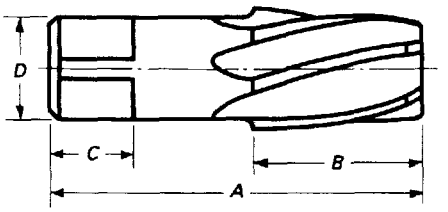

TABLE 34 TAPER PIPE REAMERS WITH SPIRAL FLUTES AND SQUARED SHANK — HIGH-SPEED STEEL

Nominal Size	Dimensions							Number of Flutes
	Nominal Diameter		Length Overall *A*	Length of Flute *B*	Length of Square *C*	Diameter of Shank *D*	Size of Square	
	Large End	Small End						
1/8	0.362	0.316	2 1/8	3/4	3/8	0.4375	0.328	4 to 6 incl.
1/4	0.472	0.406	2 7/16	1 1/16	7/16	0.5625	0.421	4 to 6 incl.
3/8	0.606	0.540	2 9/16	1 1/16	1/2	0.7000	0.531	4 to 6 incl.
1/2	0.751	0.665	3 1/8	1 3/8	5/8	0.6875	0.515	4 to 6 incl.
3/4	0.962	0.876	3 1/4	1 3/8	11/16	0.9063	0.679	6 to 10 incl.
1	1.212	1.103	3 3/4	1 3/4	13/16	1.1250	0.843	6 to 10 incl.
1 1/4	1.553	1.444	4	1 3/4	15/16	1.3125	0.984	6 to 10 incl.
1 1/2	1.793	1.684	4 1/4	1 3/4	1	1.5000	1.125	6 to 10 incl.
2	2.268	2.159	4 1/2	1 3/4	1 1/8	1.8750	1.406	8 to 12 incl.

GENERAL NOTE: Dimensions are in inches.

Copyright ASME International
Provided by IHS under license with ASME
No reproduction or networking permitted without license from IHS
Not for Resale

TOLERANCES FOR TABLE 34

Element	Range Nominal Size	Direction	Tolerance
Length overall (*A*)	1/8 to 3/4 incl.	Plus or minus	1/16
	1 to 1 1/2 incl.	Plus or minus	3/32
	2	Plus or minus	1/8
Length of flute (*B*)	1/8 to 3/4 incl.	Plus or minus	1/16
	1 to 1 1/2 incl.	Plus or minus	3/32
	2	Plus or minus	1/8
Length of square (*C*)	1/8 to 3/4 incl.	Plus or minus	1/32
	1 to 2 incl.	Plus or minus	1/16
Diameter of shank (*D*)	1/8	Minus	0.0015
	1/4 to 1 incl.	Minus	0.002
	1 1/4 to 2 incl.	Minus	0.003
Size of square	1/8	Minus	0.004
	1/4 to 3/4 incl.	Minus	0.006
	1 to 2 incl.	Minus	0.008

GENERAL NOTES:
(a) Dimensions are in inches.
(b) These reamers are tapered 3/4 in./ft and are intended for reaming holes to be tapped with American National Standard Taper Pipe Thread taps.
(c) Number of flutes may vary in accordance with manufacturer's standard practice but must fall within the range specified in the table.
(d) These reamers are standard with left-hand spiral flutes.

Copyright ASME International
Provided by IHS under license with ASME
No reproduction or networking permitted without license from IHS
Not for Resale

APPENDIX A
CONVERSION TABLES FROM INCH TO MILLIMETER

Any dimension in this Standard can be converted by the addition of its components from the tables in this Appendix.

Consider the actual or implied precision of the values in customary units in determining the number of significant digits to be retained in the SI equivalents. (For an explanation of conversion techniques, see American National Standard Metric Practice Guide, ANSI Z210.1-1976.)

inch	mm
1/64	0.40
1/32	0.79
3/64	1.19
1/16	1.58
5/64	1.98
3/32	2.38
7/64	2.78
1/8	3.18
9/64	3.57
5/32	3.97
11/64	4.37
3/16	4.76
13/64	5.16
7/32	5.56
15/64	5.95
1/4	6.35
17/64	6.75
9/32	7.14
19/64	7.54
5/16	7.94
21/64	8.33
11/32	8.73
23/64	9.13
3/8	9.52
25/64	9.92
13/32	10.32
27/64	10.72
7/16	11.11
29/64	11.51
15/32	11.91
31/64	12.30

inch	mm
1/2	12.70
33/64	13.10
17/32	13.49
35/64	13.89
9/16	14.29
37/64	14.68
19/32	15.08
39/64	15.48
5/8	15.88
41/64	16.27
21/32	16.67
43/64	17.07
11/16	17.46
45/64	17.86
23/32	18.26
47/64	18.65
3/4	19.05
49/64	19.45
25/32	19.84
51/64	20.24
13/16	20.64
53/64	21.04
27/32	21.43
55/64	21.83
7/8	22.22
57/64	22.62
29/32	23.02
59/64	23.42
15/16	23.81
61/64	24.21
31/32	24.61
63/64	25.00

inch	mm
1	25.40
2	50.80
3	76.20
4	101.60
5	127.00
6	152.40
7	177.80
8	203.20
9	228.60
10	254.00
11	279.40
12	304.80

Copyright ASME International
Provided by IHS under license with ASME
No reproduction or networking permitted without license from IHS
Not for Resale

Inch to Millimeter (for decimal inch values of less than one inch) [Do not interpolate]

inch	0.xx0	0.xx1	0.xx2	0.xx3	0.xx4	0.xx5	0.xx6	0.xx7	0.xx8	0.xx9
0.00	0.00	0.03	0.05	0.08	0.10	0.13	0.15	0.18	0.20	0.22
0.01	0.25	0.28	0.30	0.33	0.36	0.38	0.41	0.43	0.46	0.48
0.02	0.51	0.53	0.56	0.58	0.61	0.64	0.66	0.69	0.71	0.74
0.03	0.76	0.79	0.81	0.84	0.86	0.89	0.91	0.94	0.96	0.99
0.04	1.02	1.04	1.07	1.09	1.12	1.14	1.17	1.19	1.22	1.24
0.05	1.27	1.30	1.32	1.35	1.37	1.40	1.42	1.45	1.47	1.50
0.06	1.52	1.55	1.57	1.60	1.63	1.65	1.68	1.70	1.73	1.75
0.07	1.78	1.80	1.83	1.85	1.88	1.90	1.93	1.96	1.98	2.01
0.08	2.03	2.06	2.08	2.11	2.13	2.16	2.18	2.21	2.24	2.26
0.09	2.29	2.31	2.34	2.36	2.39	2.41	2.44	2.46	2.49	2.51
0.10	2.54	2.57	2.59	2.62	2.64	2.67	2.69	2.72	2.74	2.77
0.11	2.79	2.82	2.84	2.87	2.90	2.92	2.95	2.97	3.00	3.02
0.12	3.05	3.07	3.10	3.12	3.15	3.18	3.20	3.23	3.25	3.28
0.13	3.30	3.33	3.35	3.38	3.40	3.43	3.45	3.48	3.50	3.53
0.14	3.56	3.58	3.61	3.63	3.66	3.68	3.71	3.73	3.76	3.78
0.15	3.81	3.84	3.86	3.88	3.91	3.94	3.96	3.99	4.01	4.04
0.16	4.06	4.09	4.11	4.14	4.17	4.19	4.22	4.24	4.27	4.29
0.17	4.32	4.34	4.37	4.39	4.42	4.44	4.47	4.50	4.52	4.55
0.18	4.57	4.60	4.62	4.65	4.67	4.70	4.72	4.75	4.78	4.80
0.19	4.83	4.85	4.88	4.90	4.93	4.95	4.98	5.00	5.03	5.05
0.20	5.08	5.11	5.13	5.16	5.18	5.21	5.23	5.26	5.28	5.31
0.21	5.33	5.36	5.39	5.41	5.44	5.46	5.49	5.51	5.54	5.56
0.22	5.59	5.61	5.64	5.66	5.69	5.72	5.74	5.77	5.79	5.82
0.23	5.84	5.87	5.89	5.92	5.94	5.97	5.99	6.02	6.05	6.07
0.24	6.10	6.12	6.15	6.17	6.20	6.22	6.25	6.27	6.30	6.32
0.25	6.35	6.38	6.40	6.43	6.45	6.48	6.50	6.53	6.55	6.58
0.26	6.60	6.63	6.65	6.68	6.71	6.73	6.76	6.78	6.81	6.83
0.27	6.86	6.88	6.91	6.93	6.96	6.98	7.01	7.04	7.06	7.09
0.28	7.11	7.14	7.16	7.19	7.21	7.24	7.26	7.29	7.32	7.34
0.29	7.37	7.39	7.42	7.44	7.47	7.49	7.52	7.54	7.57	7.59
0.30	7.62	7.64	7.67	7.70	7.72	7.75	7.77	7.80	7.83	7.85
0.31	7.87	7.90	7.92	7.95	7.98	8.00	8.03	8.05	8.08	8.10
0.32	8.13	8.15	8.18	8.20	8.23	8.26	8.28	8.31	8.33	8.36
0.33	8.38	8.41	8.43	8.46	8.48	8.51	8.53	8.56	8.59	8.61
0.34	8.64	8.66	8.69	8.71	8.74	8.76	8.79	8.81	8.84	8.86
0.35	8.89	8.92	8.94	8.97	8.99	9.02	9.04	9.07	9.09	9.12
0.36	9.14	9.17	9.19	9.22	9.25	9.27	9.30	9.32	9.35	9.38
0.37	9.40	9.42	9.45	9.47	9.50	9.52	9.55	9.58	9.60	9.63
0.38	9.65	9.68	9.70	9.73	9.75	9.78	9.80	9.83	9.85	9.88

Copyright ASME International
Provided by IHS under license with ASME
No reproduction or networking permitted without license from IHS
Not for Resale

Inch to Millimeter (for decimal inch values of less than one inch) [Do not interpolate]

inch	0.xx0	0.xx1	0.xx2	0.xx3	0.xx4	0.xx5	0.xx6	0.xx7	0.xx8	0.xx9
0.39	9.91	9.93	9.96	9.98	10.01	10.03	10.06	10.08	10.11	10.13
0.40	10.16	10.19	10.21	10.24	10.26	10.29	10.31	10.34	10.36	10.39
0.41	10.41	10.44	10.46	10.49	10.52	10.54	10.57	10.59	10.62	10.64
0.42	10.67	10.69	10.72	10.74	10.77	10.80	10.82	10.85	10.87	10.90
0.43	10.92	10.95	10.97	11.00	11.02	11.05	11.07	11.10	11.13	11.15
0.44	11.18	11.20	11.23	11.25	11.28	11.30	11.32	11.35	11.38	11.40
0.45	11.43	11.46	11.48	11.51	11.53	11.56	11.58	11.61	11.63	11.66
0.46	11.68	11.71	11.73	11.76	11.79	11.81	11.84	11.86	11.89	11.91
0.47	11.94	11.96	11.99	12.01	12.04	12.06	12.09	12.12	12.14	12.17
0.48	12.19	12.22	12.24	12.27	12.29	12.32	12.34	12.37	12.40	12.42
0.49	12.45	12.47	12.50	12.52	12.55	12.57	12.60	12.62	12.65	12.67
0.50	12.70	12.73	12.75	12.78	12.80	12.83	12.85	12.88	12.90	12.93
0.51	12.95	12.98	13.00	13.03	13.06	13.08	13.11	13.14	13.16	13.18
0.52	13.21	13.23	13.26	13.28	13.31	13.34	13.36	13.39	13.41	13.44
0.53	13.46	13.49	13.51	13.54	13.56	13.59	13.61	13.64	13.67	13.69
0.54	13.71	13.74	13.77	13.79	13.82	13.84	13.87	13.89	13.92	13.94
0.55	13.97	14.00	14.02	14.05	14.07	14.10	14.12	14.15	14.17	14.20
0.56	14.22	14.25	14.27	14.30	14.33	14.35	14.38	14.40	14.43	14.45
0.57	14.48	14.50	14.53	14.55	14.58	14.60	14.63	14.66	14.68	14.71
0.58	14.73	14.76	14.78	14.81	14.83	14.86	14.88	14.91	14.94	14.96
0.59	14.99	15.01	15.04	15.06	15.09	15.11	15.14	15.16	15.19	15.21
0.60	15.24	15.27	15.29	15.32	15.34	15.37	15.39	15.42	15.44	15.47
0.61	15.49	15.52	15.54	15.57	15.60	15.62	15.65	15.67	15.70	15.72
0.62	15.75	15.77	15.80	15.82	15.85	15.88	15.90	15.93	15.95	15.98
0.63	16.00	16.02	16.05	16.08	16.10	16.13	16.15	16.18	16.21	16.23
0.64	16.26	16.28	16.31	16.33	16.36	16.38	16.41	16.43	16.46	16.48
0.65	16.51	16.54	16.56	16.59	16.61	16.64	16.66	16.69	16.71	16.74
0.66	16.76	16.79	16.81	16.84	16.87	16.89	16.92	16.94	16.97	16.99
0.67	17.02	17.04	17.07	17.09	17.12	17.14	17.17	17.20	17.22	17.25
0.68	17.27	17.30	17.32	17.35	17.37	17.40	17.42	17.45	17.48	17.50
0.69	17.53	17.55	17.58	17.60	17.63	17.65	17.68	17.70	17.73	17.75
0.70	17.78	17.81	17.83	17.86	17.88	17.91	17.93	17.96	17.98	18.01
0.71	18.03	18.06	18.08	18.11	18.14	18.16	18.19	18.21	18.24	18.26
0.72	18.29	18.31	18.34	18.36	18.39	18.42	18.44	18.47	18.49	18.52
0.73	18.54	18.57	18.59	18.62	18.64	18.67	18.69	18.72	18.75	18.77
0.74	18.80	18.82	18.85	18.87	18.90	18.92	18.95	18.97	19.00	19.02
0.75	19.05	19.08	19.10	19.13	19.15	19.18	19.20	19.23	19.25	19.28
0.76	19.30	19.33	19.35	19.38	19.41	19.43	19.46	19.48	19.51	19.53
0.77	19.56	19.58	19.61	19.63	19.66	19.68	19.71	19.74	19.76	19.79

Copyright ASME International
Provided by IHS under license with ASME
No reproduction or networking permitted without license from IHS
Not for Resale

Inch to Millimeter (for decimal inch values of less than one inch) [Do not interpolate]

inch	0.xx0	0.xx1	0.xx2	0.xx3	0.xx4	0.xx5	0.xx6	0.xx7	0.xx8	0.xx9
0.78	19.81	19.84	19.86	19.89	19.91	19.94	19.96	19.99	20.02	20.04
0.79	20.07	20.09	20.12	20.14	20.17	20.19	20.22	20.24	20.27	20.29
0.80	20.32	20.35	20.37	20.40	20.42	20.45	20.47	20.50	20.52	20.55
0.81	20.57	20.60	20.62	20.65	20.68	20.70	20.73	20.75	20.78	20.80
0.82	20.83	20.85	20.88	20.90	20.93	20.96	20.98	21.01	21.03	21.06
0.83	21.08	21.11	21.13	21.16	21.18	21.21	21.23	21.26	21.29	21.31
0.84	21.34	21.36	21.39	21.42	21.44	21.46	21.49	21.51	21.54	21.56
0.85	21.59	21.62	21.64	21.67	21.69	21.72	21.74	21.77	21.79	21.82
0.86	21.84	21.87	21.89	21.92	21.95	21.99	22.00	22.02	22.05	22.07
0.87	22.10	22.12	22.15	22.17	22.20	22.22	22.25	22.28	22.30	22.33
0.88	22.35	22.38	22.40	22.43	22.45	22.48	22.50	22.53	22.56	22.58
0.89	22.61	22.63	22.66	22.68	22.71	22.73	22.76	22.78	22.81	22.83
0.90	22.86	22.89	22.91	22.94	22.96	22.99	23.01	23.04	23.06	23.09
0.91	23.11	23.14	23.16	23.19	23.22	23.24	23.27	23.29	23.32	23.34
0.92	23.37	23.39	23.42	23.44	23.47	23.50	23.52	23.55	23.57	23.60
0.93	23.62	23.65	23.67	23.70	23.72	23.75	23.77	23.80	23.83	23.85
0.94	23.88	23.90	23.93	23.95	23.98	24.00	24.03	24.05	24.08	24.10
0.95	24.13	24.16	24.18	24.21	24.23	24.26	24.28	24.31	24.33	24.36
0.96	24.38	24.42	24.43	24.46	24.49	24.51	24.54	24.56	24.59	24.61
0.97	24.64	24.66	24.69	24.71	24.74	24.76	24.79	24.82	24.84	24.87
0.98	24.89	24.92	24.94	24.97	24.99	25.02	25.04	25.07	25.10	25.12
0.99	25.15	25.17	25.20	25.22	25.25	25.27	25.30	25.32	25.35	25.37

Copyright ASME International
Provided by IHS under license with ASME
No reproduction or networking permitted without license from IHS
Not for Resale

AMERICAN NATIONAL STANDARDS FOR CUTTING TOOLS

Reamers B94.2-1995
Straight Cut-Off Blades for Lathes and Screw Machines ..... B94.3-1965(R1984)
Knurling B94.6-1984
Hobs ..... B94.7-1980(R1987)
Inserted Blade Milling Cutter Bodies ..... B94.8-1967(R1987)
Taps – Cut and Ground Threads B94.9-1987
Twist Drills B94.11M-1993
Punches – Basic Head Type ..... B94.14-1968(R1987)
Punches – Basic Head Type (Metric) ..... B94.14.1-1977(R1984)
Retainers – Basic Ball-Lock, Punch and Die Button, Light and Heavy Duty B94.16-1987
Retainers – Basic Ball-Lock, Punch and Die Button, Light and Heavy Duty (Metric) ..... B94.16.1-1978(R1987)
Gages – Functional, Ball-Lock Punches, Die Buttons, and Retainers B94.17-1987
Gages – Functional, Ball-Lock Punches, Die Buttons, and Retainers (Metric) ..... B94.17.1-1977(R1984)
Punches – Basic Ball-Lock Light and Heavy Duty B94.18-1987
Punches – Basic Ball-Lock Light and Heavy Duty (Metric) ..... B94.18.1-1977(R1984)
Milling Cutters and End Mills B94.19-1985
Gear Shaper Cutters ..... B94.21-1968(R1987)
Punches – Variable, Head Type ..... B94.22-1968(R1987)
Punches – Variable, Head Type (Metric) ..... B94.22.1-1977(R1984)
Punch Guide Bushings – Variable, Press Fit ..... B94.23-1969(R1987)
Die Buttons – Basic Taper Relief, Press Fit ..... B94.27-1970(R1987)
Die Buttons – Basic Taper Relief, Press Fit (Metric) ..... B94.27.1M-1983(R1988)
Die Buttons – Basic Straight Relief, Press Fit ..... B94.28-1970(R1987)
Die Buttons – Basic Straight Relief, Press Fit (Metric) B94.28.1M-1984
Die Buttons – Basic Ball-Lock ..... B94.29-1970(R1988)
Die Buttons – Basic Ball-Lock (Metric) ..... B94.29.1-1977(R1984)
Die Buttons – Variable, Press Fit ..... B94.30-1970(R1988)
Steel Rotary Slitting Knives and Steel Spacing Collars ..... B94.31-1981(R1995)
Jig Bushings ..... B94.33-1974(R1986)
Drill Drivers, Split-Sleeve, Collet Type ..... B94.35-1972(R1988)
Roller Turner Type Cutting Tools, Single-Point ..... B94.37M-1979(R1985)
Punches – Variable, Angle Head Type and Related Quill Bushings ..... B94.38-1972(R1987)
Punches – Basic, Combination Angle Head Type and Related Quill Bushings ..... B94.39-1972(R1987)
Punches – Wire Type ..... B94.40-1972(R1987)
Punches – Basic, Angle Head Type and Related Quill Bushings ..... B94.41-1972(R1987)
Die Buttons – Variable, Press Fit, Headless and Head Type, Step Relief ..... B94.43-1972(R1987)
Punches – Basic, Cylindrical Head Type and Related Quill Bushings ..... B94.44-1972(R1987)
Spade Drill Blades and Spade Drill Holders ..... B94.49-1975(R1986)
Basic Nomenclature and Definitions for Single-Point Cutting Tools ..... B94.50-1975(R1995)
Specifications for Band Saw Blades (Metal Cutting) B94.51M-1994
Specifications for Hacksaw Blades B94.52M-1994
Solid Steel Rectangular Metal Cutting Squaring Shear Knives – Dimensional Tolerances ..... B94.53-1978(R1984)
Specifications for Hole Saws, Hole Saw Arbors, and Hole Saw Accessories B94.54-1994
Tool Life Testing With Single-Point Turning Tools B94.55M-1985

The ASME Publications Catalog shows a complete list of all the Standards published by the Society. For a complimentary catalog, or the latest information about our publications, call 1-800-THE-ASME (1-800-843-2763).

Copyright ASME International
Provided by IHS under license with ASME
No reproduction or networking permitted without license from IHS
Not for Resale

ASME Services

ASME is committed to developing and delivering technical information. Representatives at ASME's Information Central are available to assist you in the following areas:

ASME Press
Codes & Standards
Credit Card Orders
IMechE Publications
Meetings & Conferences
Member Dues Status
Member Services & Benefits
Other ASME Programs
Payment Inquiries
Professional Development
Short Courses
Publications
Public Information
Self-Study Courses
Shipping Information
Subscriptions/Journals/Magazines
Symposia Volumes
Technical Papers

There are four options for making inquiries* or placing orders. Simply mail, phone, fax, or E-mail us and an Information Central representative will handle your request.

Mail	*Call Toll Free*	*Fax-24 hours*	*E-Mail-24 hours*
ASME	**US & Canada:** 800-THE-ASME	201-882-1717	Infocentral
22 Law Drive, Box 2900	(800-843-2763)	201-882-5155	@ asme.org
Fairfield, New Jersey	**Mexico:** 95-800-THE-ASME		
07007-2900	(95-800-843-2763)		
	Universal: 201-882-1167		

* Information Central staff are not permitted to answer inquiries about the technical content of this code or standard. Information as to whether or not technical inquiries are issued to this code or standard is shown on the copyright page. All technical inquiries must be submitted in writing to the staff secretary. Additional procedures for inquiries may be listed within.

Copyright ASME International
Provided by IHS under license with ASME
No reproduction or networking permitted without license from IHS
Not for Resale