STD.ASME B94.19-ENGL 1997 ■ 0759670 0589186 6T4 ■

ASME B94.19-1997
(Revision of ANSI/ASME B94.19-1985)

MILLING CUTTERS AND END MILLS

AN AMERICAN NATIONAL STANDARD

The American Society of Mechanical Engineers

Copyright ASME International
Provided by IHS under license with ASME
No reproduction or networking permitted without license from IHS

Not for Resale

STD.ASME B94.19-ENGL 1997 ■ 0759670 0589187 530 ■

The American Society of
Mechanical Engineers

AN AMERICAN NATIONAL STANDARD

MILLING CUTTERS AND END MILLS

ASME B94.19-1997

(Revision of ANSI/ASME B94.19-1985)

Copyright ASME International
Provided by IHS under license with ASME
No reproduction or networking permitted without license from IHS

Not for Resale

Date of Issuance: March 20, 1998

This Standard will be revised when the Society approves the issuance of a new edition. There will be no addenda or written interpretations of the requirements of this Standard issued to this Edition.

ASME is the registered trademark of The American Society of Mechanical Engineers.

This code or standard was developed under procedures accredited as meeting the criteria for American National Standards. The Consensus Committee that approved the code or standard was balanced to assure that individuals from competent and concerned interests have had an opportunity to participate. The proposed code or standard was made available for public review and comment which provides an opportunity for additional public input from industry, academia, regulatory agencies, and the public-at-large.

ASME does not "approve," "rate," or "endorse" any item, construction, proprietary device, or activity.

ASME does not take any position with respect to the validity of any patent rights asserted in connection with any items mentioned in this document, and does not undertake to insure anyone utilizing a standard against liability for infringement of any applicable Letters Patent, nor assume any such liability. Users of a code or standard are expressly advised that the determination of the validity of any such patent rights, and the risk of the infringement of such rights, is entirely their own responsibility.

Participation by federal agency representative(s) or person(s) affiliated with industry is not to be interpreted as government or industry endorsement of this code or standard.

ASME accepts responsibility for only those interpretations issued in accordance with governing ASME procedures and policies which preclude the issuance of interpretations by individual volunteers.

No part of this document may be reproduced in any form,
in an electronic retrieval system or otherwise,
without the prior written permission of the publisher.

The American Society of Mechanical Engineers
345 East 47th Street, New York, NY 10017

Copyright © 1998 by
THE AMERICAN SOCIETY OF MECHANICAL ENGINEERS
All Rights Reserved
Printed in U.S.A.

Copyright ASME International
Provided by IHS under license with ASME
No reproduction or networking permitted without license from IHS

Not for Resale

FOREWORD

(This Foreword is not part of ASME B94.19-1997.)

Interest in the standardization of small tools, including milling cutters, dates back as far as 1916. Late in 1918 the American Engineering Standards Committee was organized and by 1920 ASME sponsorship had been sought and obtained for its efforts.

During its early years, the interests of the Sectional Committee on Small Tools and Machine Tool Elements were concentrated on other parts of the standardization program; the manufacturers of milling cutters began the work by inaugurating a program of simplified practice under procedures set up by the U.S. Department of Commerce. A report of this activity was published in 1925.

Technical Committee No. 5, organized in 1927 to further the effort, by 1929 had completed a proposed standard, submitted it to and had it accepted by the Sectional Committee of the ASME and its two cosponsors, the National Machine Tool Builders' Association and the Society of Automotive Engineers. Joint transmission of the proposed standard to the American Standards Association resulted in their grant of approval and recognition as an American Standard on April 8, 1930, with the designation ASA B5c-1930.

Late in 1946, Sectional Committee B5 instructed a reorganized TC5 to revise this standard, bring it into harmony with the American Standard for Machine Tapers (ASA B5.10-1932), and enlarge its scope. On its completion in 1949 and approval by the Sectional Committee and its three cosponsor organizations (The Metal Cutting Tool Institute is the third), the revision was presented to the American Standards Association. Designation as an American Standard was given on April 5, 1950. The document was designated ASA B5.3-1950.

Again in 1956, TC5 was reactivated, this time for the purpose of reviewing both ASA B5.3-1950 and ASA B5c1-1947 (Nomenclature for Milling Cutter Teeth) for possible revision and unification. As a result of the review, the decision was made to revise and unify, which involved such changes as:

(a) deletion of all cutters not considered as standards;

(b) inclusion of a nomenclature section made up of words and terms taken from ASA B5c1-1947 and ASA B5.3-1950 (both the nomenclature section and glossary of terms) but restricted to elements of standard cutters only;

(c) segregation and sectionalizing of tolerances on milling cutter dimensions plus the addition, for the first time, of a table of tolerances on the axial and radial runout of standard cutters.

The resulting American Standard was approved on February 5, 1960; it was designated ASA B5.3-1960.

In 1962, Sectional Committee B5 was divided, and the subject area of "Cutting Tools, Holders, Drivers, and Bushings" was assigned to new Sectional Committee B94, later renamed USA Standards Committee B94. Standardization of Milling Cutters was assigned to TC5 of B94.

Continuing developments in the milling cutter field, particularly a large expansion in the types of standard end mills, led to early reactivation of TC5 for the purpose of reviewing and updating ASA B5.3-1960. The resulting new standard, ANSI B94.19, was approved on May 27, 1968. ANSI B94.19-1968 incorporated several significant changes, such as:

Copyright ASME International
Provided by IHS under license with ASME
No reproduction or networking permitted without license from IHS
Not for Resale

(a) the increasing importance of end mills as a distinct category of cutting tools was recognized in the new title: "Milling Cutters and End Mills";

(b) dimensional standards for end mills were separated from those for conventional milling cutters and were presented in a separate section. Similarly, the tolerance tables for milling cutters and end mills were presented separately;

(c) the nomenclature section was updated and at the same time it was made more compact through deletion of unnecessary photographic illustrations.

The 1977 revision follows the format developed for ANSI B94.19-1968. Dimensional standards for milling cutters are covered by Tables 1–27, while Tables 28–65 cover end mills. These are followed by common milling cutter and end mill elements in Tables 66–69, and by milling cutter and end mill tolerances in Tables 70 and 71, respectively. In the revision, two new tables were added while five were deleted; of the remaining tables, about 25% were revised to some degree.

The 1985 revision followed the 1977 format. Due to the addition of new Tables 66–71, which gave dimensions and standard sizes for premium high speed steel end mills, the 1977 tables with these numbers were redesignated as Tables 72–77.

The 1997 revision of this Standard follows the same format as the 1985 version with a few changes that were made to bring it into conformance with standard industry practice. Three tables were removed and dimensions for overall length were changed in eight of the tables. Tolerances were added to Table 74 for premium high speed steel end mills and adjustments were made to the tables to remove specifications for tools that are no longer being manufactured.

ASME B94.19-1997 was approved by the American National Standards Institute (ANSI) on September 25, 1997.

Copyright ASME International
Provided by IHS under license with ASME
No reproduction or networking permitted without license from IHS
Not for Resale

ASME STANDARDS COMMITTEE B94
Cutting Tools, Holders, Drivers, and Bushings

(The following is the roster of the Committee at the time of approval of this Standard.)

OFFICERS

P. Bourg, *Chair*
B. P. Biddinger, *Secretary*

COMMITTEE PERSONNEL

P. Bourg, Tivoly, Inc., Derby Line, Vermont
A. Bratkovich, The Association for Manufacturing Technology, McLean, Virginia
E. Czopor, E&S Sales, Bloomfield Hills, Michigan
D. Fischer, The Wapakoneta Machine Co., Wapakoneta, Ohio
W. Gill, Keen Agers, Inc., Naples, Florida
D. Lionette, Porter Precision Products, Cincinnati, Ohio
M. E. Merchant, Institute of Advanced Manufacturing Science, Cincinnati, Ohio
V. Peterson, Kennametal, Solon, Ohio
C. Preuss, Kingsford Broach and Tool, Inc., Westlake, Ohio
C. Stockinger, United States Cutting Tool Institute, Cleveland, Ohio
J. Wherry, Cemented Carbide Producer's Association, Cleveland, Ohio

TECHNICAL COMMITTEE 5: MILLING CUTTERS

R. Moring, Greenfield Industries, Augusta, Georgia

Copyright ASME International
Provided by IHS under license with ASME
No reproduction or networking permitted without license from IHS
Not for Resale

CONTENTS

Foreword iii
Standards Committee Roster v

1 Scope 1

2 Nomenclature 1
2.1 Definitions 1
2.2 General Classifications 1
2.3 Explanation of "Hand" of Milling Cutters 1
2.4 Nomenclature of Cutter Elements 2

3 Milling Cutter and End Mill Dimensions 5

4 Milling Cutter and End Mill Elements 5

5 Milling Cutter and End Mill Tolerances 5

Figures
1 Milling Cutter Terms 2
2 End Mill Terms 3

Tables
1 Plain Milling Cutters, Light Duty: High-Speed Steel 6
2 Plain Milling Cutters, Heavy Duty: High-Speed Steel 7
3 Plain Milling Cutters, High Helix: High-Speed Steel 7
4 Side Milling Cutters: High-Speed Steel 8
5 Staggered-Tooth Side Milling Cutters: High-Speed Steel 9
6 Half-Side Milling Cutters: High-Speed Steel 9
7 Plain Metal Slitting Saws: High-Speed Steel 10
8 Metal Slitting Saws With Side Teeth: High-Speed Steel 11
9 Metal Slitting Saws With Staggered Peripheral and Side Teeth: High-Speed Steel 11
10 Screw Slotting Cutters: High-Speed Steel 12
11 Single-Angle Milling Cutters With Straight Holes: High-Speed Steel 13
12 60 deg Single-Angle Milling Cutters With Weldon Shanks: High-Speed Steel 13
13 Double-Angle Milling Cutters: High-Speed Steel 14
14 T-Slot Milling Cutters With Staggered Teeth and Weldon Shanks: High-Speed Steel 15
15 Woodruff Keyseat Milling Cutters, Shank Type: High-Speed Steel 16
16 Woodruff Keyseat Milling Cutters With Staggered Teeth, Arbor Type: High-Speed Steel 17
17A Shell Mills: High-Speed Steel 18
17B Tolerances for Shell Mills: High-Speed Steel 18
18 Convex Milling Cutters, Form Relieved: High-Speed Steel 19
19 Concave Milling Cutters, Form Relieved: High-Speed Steel 19
20 Corner Rounding Milling Cutters, Arbor Type, Form Relieved: High-Speed Steel 20
21 Corner Rounding Cutters With Weldon Shanks, Form Relieved: High-Speed Steel 20

Copyright ASME International
Provided by IHS under license with ASME
No reproduction or networking permitted without license from IHS
Not for Resale

22 Roughing Gear Milling Cutters for Gears With 14½ deg Pressure Angle, Form Relieved: High-Speed Steel 21
23A Finishing Gear Milling Cutters for Gears With 14½ deg Pressure Angle, Form Relieved: High-Speed Steel 21
23B Finishing Gear Milling Cutters for Gears With 14½ deg Pressure Angle, Form Relieved: High-Speed Steel 22
24 Gear Milling Cutters for Mitre and Bevel Gears With 14½ deg Pressure Angles, Form Relieved: High-Speed Steel 23
25 Roller Chain Sprocket Milling Cutters, ASME Standard Tooth Form,[1] Form Relieved: High-Speed Steel 24
26 Multiple-Flute, Helical Series End Mills, Plain Straight Shanks: High-Speed Steel 27
27A Roughing, Single-End End Mills With Weldon Shanks: High-Speed Steel 28
27B Tolerances for Roughing, Single-End End Mills With Weldon Shanks: High-Speed Steel 29
28 Two-Flute, Single-End, Helical Series End Mills For Keyway Cutting With Weldon Shanks: High-Speed Steel 29
29 Stub Length, Four-Flute, Medium Helix, Double-End Miniature End Mills With 3/16 in. Diameter Straight Shanks; High-Speed Steel 30
30 Regular Length, Four-Flute, Medium Helix, Double-End Miniature End Mills With 3/16 in. Diameter Straight Shanks: High-Speed Steel 30
31 Long Length, Four-Flute, Medium Helix, Double-End Miniature End Mills With 3/16 in. Diameter Straight Shanks: High-Speed Steel 31
32 Stub Length, Two-Flute, Medium Helix, Double-End Miniature End Mills With 3/16 in. Diameter Straight Shanks: High-Speed Steel 32
33 Stub Length, Two-Flute, Medium Helix, Ball End, Double-End Miniature End Mills With 3/16 in. Diameter Straight Shanks: High-Speed Steel 33
34 Regular Length, Two-Flute, Medium Helix, Double-End Miniature End Mills With 3/16 in. Diameter Straight Shanks: High-Speed Steel 34
35 Regular Length, Two-Flute, Medium Helix, Ball End, Double-End Miniature End Mills With 3/16 in. Diameter Straight Shanks: High-Speed Steel 35
36 Long Length, Two-Flute, Medium Helix Double-End Miniature End Mills With 3/16 in. Diameter Straight Shanks: High-Speed Steel 36
37 Regular Length, Multiple-Flute, Medium Helix, Single-End End Mills With Weldon Shanks: High-Speed Steel 37
38 Long Length, Multiple-Flute, Medium Helix, Single-End End Mills With Weldon Shanks: High-Speed Steel 37
39 Extra Long Length, Multiple-Flute, Medium Helix, Single-End End Mills With Weldon Shanks: High-Speed Steel 38
40 Stub Length, Two-Flute, Medium Helix, Single-End End Mills With Weldon Shanks: High-Speed Steel 38
41 Regular Length, Two-Flute, Medium Helix, Single-End End Mills With Weldon Shanks: High-Speed Steel 39
42 Regular Length, Two-Flute, Medium Helix, Ball End, Single-End End Mills With Weldon Shanks: High-Speed Steel 39
43 Long Length, Two-Flute, Medium Helix, Single-End End Mills With Weldon Shanks: High-Speed Steel 40
44 Long Length, Two-Flute, Medium Helix, Ball End, Single-End End Mills With Weldon Shanks: High-Speed Steel 41
45 Stub Length, Four-Flute, Medium Helix, Double-End End Mills With Weldon Shanks: High-Speed Steel 42
46 Regular Length, Four-Flute, Medium Helix, Double-End End Mills With Weldon Shanks: High-Speed Steel 43

Copyright ASME International
Provided by IHS under license with ASME
No reproduction or networking permitted without license from IHS
Not for Resale

47 Stub Length, Two-Flute, Medium Helix, Double-End End Mills With Weldon Shanks: High-Speed Steel 44
48 Regular Length, Two-Flute, Medium Helix, Double-End End Mills With Weldon Shanks: High-Speed Steel 45
49 Regular Length, Two-Flute, Medium Helix, Ball End, Double-End End Mills With Weldon Shanks: High-Speed Steel 46
50 Regular Length, Four-Flute, Medium Helix, Center Cutting, Single-End End Mills With Weldon Shanks: High-Speed Steel 47
51 Long Length, Four-Flute, Medium Helix, Center Cutting, Single-End End Mills With Weldon Shanks: High-Speed Steel 47
52 Extra Long Length, Four-Flute, Medium Helix, Center Cutting, Single-End End Mills With Weldon Shanks: High-Speed Steel 48
53 Regular Length, Three-Flute, Medium Helix, Center Cutting, Single-End End Mills With Weldon Shanks: High-Speed Steel 48
54 Long Length, Three-Flute, Medium Helix, Center Cutting, Single-End End Mills With Weldon Shanks: High-Speed Steel 49
55 Regular Length, Four-Flute, Medium Helix, Center Cutting, Double-End End Mills With Weldon Shanks: High-Speed Steel 49
56 Regular Length, Three-Flute, Medium Helix, Center Cutting, Double-End End Mills With Weldon Shanks: High-Speed Steel 50
57 Heavy Duty, Medium Helix, Square End, Single-End End Mills With 2 in. Diameter Shanks: High-Speed Steel 51
58 Heavy Duty, Medium Helix, Ball End, Single-End End Mills With 2 in. Diameter Shanks: High-Speed Steel 52
59 Heavy Duty, Medium Helix, Single-End, $2\frac{1}{2}$ in. End Mills: High-Speed Steel 53
60 Regular Length, Two-Flute, High Helix, Single-End End Mills With Weldon Shanks: High-Speed Steel 53
61 Long Length, Two-Flute, High Helix, Single-End End Mills With Weldon Shanks: High-Speed Steel 54
62 Extra Long Length, Two-Flute, High Helix, Single-End End Mills With Weldon Shanks: High-Speed Steel 54
63 Four-Flute, Center Cutting, Medium Helix, Single-End End Mills With Weldon Shanks 55
64 Ball End, Two-Flute, Medium Helix, Single-End End Mills With Weldon Shanks 55
65 Long Length, Four-Flute, Center Cutting, Medium Helix, Single-End End Mills With Weldon Shanks 55
66 Ball End, Four-Flute, Medium Helix, Single-End End Mills With Weldon Shanks 55
67 Two-Flute, Medium Helix, Single-End End Mills With Weldon Shanks 56
68 Extra Long Length, Multiple-Flute, Center Cutting, Medium Helix Single-End End Mills With Weldon Shanks 56
69 Keys and Keyways for Milling Cutters and Arbors 57
70A Weldon Shanks 58
70B Tolerances for Weldon Shanks 58
71A Combination Shanks for End Mills, Right-Hand Cut 59
71B Tolerances for Combination Shanks for End Mills, Right-Hand Cut 59
72A Combination Shanks for End Mills, Left-Hand Cut 60
72B Tolerances for Combination Shanks for End Mills, Left-Hand Cut 60
73 Tolerances for Standard Milling Cutters 61
74 Tolerances for Standard End Mills 64

Appendix

A Conversion Tables From Inch to Millimeter 67

Copyright ASME International
Provided by IHS under license with ASME
No reproduction or networking permitted without license from IHS
Not for Resale

Tables

A1 Conversion Table From Inch to Millimeter 67
A2 Conversion Table From Inch to Millimeter for Decimal Inch Values Less Than 1 68

Copyright ASME International
Provided by IHS under license with ASME
No reproduction or networking permitted without license from IHS
Not for Resale

MILLING CUTTERS AND END MILLS

1 SCOPE

This Standard covers high speed steel milling cutters and end mills of one piece construction as listed in Tables 1 through 62. It also includes general definitions, sizes, and tolerances.

2 NOMENCLATURE

2.1 Definitions

milling cutter: a rotary cutting tool provided with one or more cutting elements called teeth, which intermittently engage the workpiece and remove material by relative movement of the workpiece and cutter (see Fig. 1).

end mill: a milling cutter that is shank mounted to the machine tool and has cutting teeth on the end in addition to those on the periphery. It may be of single or double end construction (see Fig. 2).

2.2 General Classifications

2.2.1 Classification Based on Type of Relief on Cutting Edges

profile sharpened cutter: a cutter on which the relief is obtained, and that is resharpened by grinding a narrow land back of the cutting edges. Profile sharpened cutters may produce flat, curved, or irregular surfaces.

form relieved cutter: a cutter which is so relieved that, by grinding only the faces of the teeth, the original form is maintained throughout the life of the cutter. Form relieved cutters may produce flat, curved, or irregular surfaces.

2.2.2 Classification Based on Method of Mounting

arbor-type cutter: a cutter with a hold for mounting on an arbor and that usually has a keyway to receive a driving key. Sometimes called a shell-type cutter.

shank-type cutter: a cutter with a straight or tapered shank to fit the machine tool spindle or adapter.

2.3 Explanation of "Hand" of Milling Cutters

The terms *right hand* and *left hand* are used to describe hand of rotation, hand of cutter, and hand of flute helix.

2.3.1 Hand of Rotation (or Hand of Cut)

right-hand rotation (or right-hand cut): the counterclockwise rotation of a cutter revolving so as to make a cut when viewed from a position in front of a horizontal milling machine and facing the spindle.

left-hand rotation (or left-hand cut): the clockwise rotation of a cutter revolving so as to make a cut when viewed from a position in front of a horizontal milling machine and facing the spindle.

2.3.2 Hand of Cutter. Some types of cutters require special consideration when referring to their hand. These are principally cutters with unsymmetrical forms, face type cutters, or cutters with threaded holes.

symmetrical cutter: may be reversed on the arbor in the same axial position and rotated in the cutting direction without altering the contour produced on the workpiece, and may be considered as either right or left hand.

unsymmetrical cutter: reverses the contour produced on the workpiece when reversed on the arbor in the same axial position and rotated in the cutting direction.

single angle milling cutter: when the larger diameter side faces the viewer, a single angle milling cutter is right hand if it must be rotated counterclockwise to make a cut. When the larger diameter side faces the viewer, a single angle milling cutter is left hand if it must be rotated clockwise to make a cut.

single corner rounding cutter: when the smaller diameter side faces the viewer, the cutter is right hand if rotated counterclockwise to make a cut, and is left hand if rotated clockwise to make a cut.

2.3.3 Hand of Flute Helix

straight flute: a milling cutter with its cutting edges in planes parallel to the cutter axis.

Milling cutters with flute helix in one direction only are described as having right- or left-hand helixes.

Copyright ASME International
Provided by IHS under license with ASME
No reproduction or networking permitted without license from IHS
Not for Resale

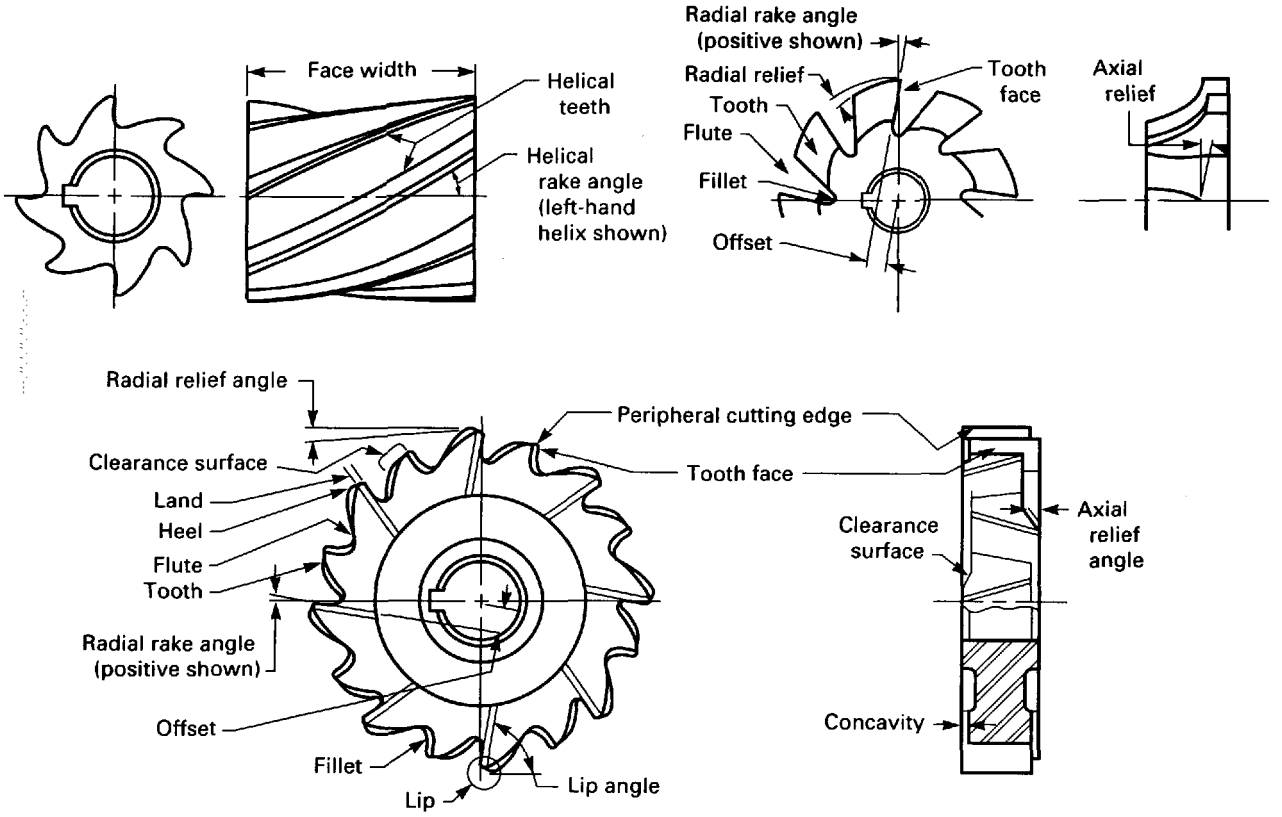

FIG. 1 MILLING CUTTER TERMS

right-hand helix: the flutes twist away from the observer in a clockwise direction when viewed from either end of the cutter.

left-hand helix: the flutes twist away from the observer in a counterclockwise direction when viewed from either end of the cutter.

staggered tooth cutter: a milling cutter with every other flute of opposite (right- and left-hand) helix.

2.4 Nomenclature of Cutter Elements

alternate: cutter features that differ from each other in turn in a regular sequence such as cutting edges, chip breakers, chamfers, or teeth.

axial relief: see *relief.*

axis: the line about which a cutter rotates.

back-off: see preferred term *relief.*

cam: see *relief.*

cam relief: see *relief.*

chamfer: (1) a beveled surface to eliminate an otherwise sharp corner; (2) a relieved angular cutting edge at a tooth corner.

chamfer angle: the angle between a beveled surface and the axis of the cutter.

chamfer length: the extent of the chamfer measured parallel to the axis of the cutter.

circular pitch: in reference to milling cutters, the circular distance between adjacent teeth measured at the periphery of the cutter.

circular pitch variation: the amount of departure from true or specified circular pitch.

clearance: the additional space provided behind the relieved land of a cutter tooth to eliminate undesirable contact between the cutter and workpiece.

clearance surface: the angular or curved surface behind the relieved land.

Copyright ASME International
Provided by IHS under license with ASME
No reproduction or networking permitted without license from IHS
Not for Resale

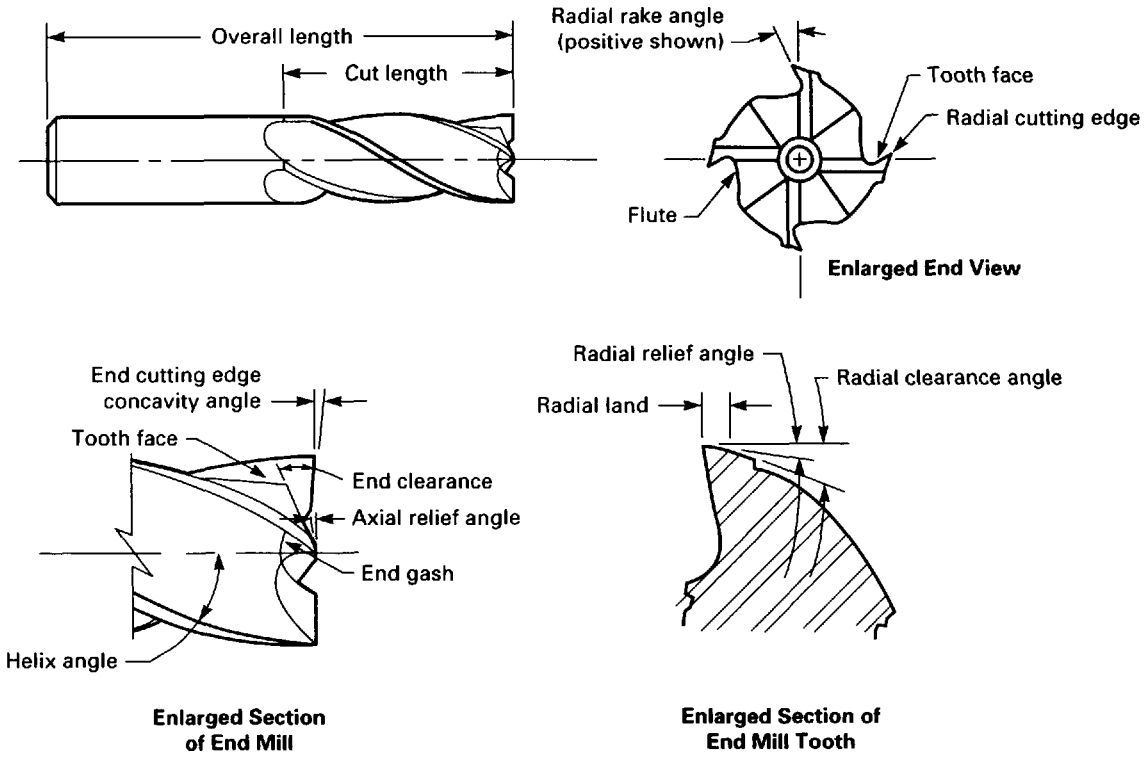

FIG. 2 END MILL TERMS

concave: (1) departure from a plane where the central portion is below or interior to the outer edges; (2) departure from parallelism on a cutter where the diameter is less at the middle than at the ends; (3) specifically, a cutter designed to produce a convex surface of circular contour.

concavity: see *relief.*

convex: (1) departure from a plane where the central portion is above or exterior to the outer edges; (2) departure from parallelism on a cutter where the diameter is greater at the middle than at the ends; (3) specifically, a cutter designed to produce a concave surface of circular contour.

core diameter: the diameter of a circle that is tangent to the bottom of the flutes.

counterbore: as applied to a milling cutter, an enlargement of the cutter bore at one or both ends to provide space for a nut, screw, or bolts, or to provide clearance for a shoulder on arbor or spindle. A recess to facilitate manufacture and sharpening where a cutter has end teeth.

cutter sweep: the sections removed by the milling cutter or grinding wheel in entering or leaving the flute.

cutting edge: the leading edge of the cutter tooth.

cutting edge angle: the angle that a cutting edge makes with an axial plane at any given point. A constant lead will produce a constant cutting edge angle on a cylindrical cutter, and a varying cutting edge angle on a tapered cutter. A varying lead can be used to produce a constant cutting edge angle on a tapered cutter.

depth of form: on a cutter, the difference between the radial distances to the highest and lowest points of the cutting edges.

dish: see preferred term *concavity* under *relief.*

drive slot: a slot in the side or end of a cutter to receive a driving key.

eccentric relief: see *relief.*

effective diameter: the maximum width of the flat surface that a shell mill will produce at one pass.

end relief: see preferred term *axial relief* under *relief.*

entrance angle: the angle formed between a center line on the cutter that is perpendicular to the direction

Copyright ASME International
Provided by IHS under license with ASME
No reproduction or networking permitted without license from IHS
Not for Resale

of feed, and a radial line through a point on the cutting edge where the tooth first contacts the workpiece.

face: the axial cutting length of a plain mill or similar cutter.

face relief: see preferred term *axial relief* under *relief.*

fillet: the bottom surface of the flute.

flat relief: see *relief.*

flute: the chip space between the back of one tooth and the face of the following tooth.

flute length: see *length of cut.*

flute spacing: see preferred term *circular pitch.*

form relieved: see para. 2.2.1.

gash: (1) see preferred term *flute*; (2) a term applied to the secondary cuts on a tool to provide chip space at corners and ends.

gullet: see preferred term *fillet.*

heel: (1) the back edge of the relieved land; (2) the inner end of a facing cutting edge.

helical: describes a cutting edge or flute that progresses uniformly around a cylindrical surface in an axial direction.

helical rake: see *rake.*

helix angle: the cutting edge angle that a helical cutting edge makes with a plane containing the axis of a cylindrical cutter.

hook: see *rake.*

keyway: the pocket or slot, usually in the driven element, to provide a driving surface for the key.

land: the narrow surface of a profile sharpened cutter tooth immediately behind the cutting edge.

cylindrical land: a narrow portion of the peripheral land, adjacent to the cutting edge, having no radial relief.

relieved land: a narrow portion of the land, adjacent to the cutting edge, which provides relief.

unrelieved land: a narrow portion of the land, adjacent to the cutting edge, having no relief.

lead: the axial advance of a helical cutting edge in one turn around the axis.

length of cut: as applied to end mills, the effective axial length of cutting edge (not including the cutter sweep; see Fig. 2).

lip: the material included between a relieved land and a tooth face.

lip angle: the included angle between a tooth face and a relieved land.

neck: the section of reduced diameter between the flutes and shank of a shank type cutter.

offset: the distance that a tooth face is positioned off center to obtain the desired rake.

parallelism: the condition in which the radius to any point of a peripheral cutting edge is constant.

peripheral relief: see *relief.*

peripheral relief angle: see preferred term *relief angle* under *relief.*

periphery: the outside circumference of a cutter.

positive rake: see *rake.*

primary relief: see *relief.*

profile sharpened: see para. 2.2.1.

radial rake: see *rake.*

radial relief: see *relief.*

rake: the angular relationship between the tooth face, or a tangent to the tooth face at a given point and a given reference plane or line.

helical rake: applies to helical teeth only (not angular). The helical rake at a given point on the flute face is the angle between the tool axis and a tangent plane at the given point.

hook: a concave condition of a tooth face. The rake of a hooked tooth face must be determined at a given point.

positive rake: describes a tooth face in rotation whose cutting edge leads the surface of the tooth face.

radial rake: the angle between the tooth face and a radial line passing through the cutting edge in a plane perpendicular to the cutter axis.

resultant rake: the angle between a tangent to the tooth face at a given point on the cutting edge and a radial line to this point measured in a plane perpendicular to the cutting edge. Resultant rake is a term descriptive of cutter geometry alone without regard to operating factors and defines the resultant rake contained on a cutter due to the combination of radial rake or hook; axial or helical rake; and a corner angle or corner radius.

Copyright ASME International
Provided by IHS under license with ASME
No reproduction or networking permitted without license from IHS
Not for Resale

STD.ASME B94.19-ENGL 1997 ■ 0759670 0589200 8T4 ■

tangential rake: the angle between a line tangent to a hooked tooth face at the peripheral cutting edge and a radial line passing through this point of tangency.

relief: the result of the removal of tool material behind or adjacent to the cutting edge to provide clearance and prevent rubbing (heel drag).

axial relief: relief measured in the axial direction between a plane perpendicular to the axis and the relieved surface. It can be measured by the amount of indicator drop at a given radius in a given amount of angular rotation.

cam relief: the relief from the cutting edge to the back of the tooth produced by a cam actuated cutting tool or grinding wheel on a relieving (back-off) machine.

concavity: the progressive decrease in cutter width from the periphery toward the center.

concave relief: a relieved surface behind the cutting edge, which is concave.

eccentric relief: a relieved surface behind the cutting edge, which is convex.

flat relief: a relieved surface behind the cutting edge, which is essentially flat.

primary relief: the relief immediately behind the cutting edge.

relief angle: the angle formed between a relieved surface and a given plane tangent to a cutting edge or to a point on a cutting edge.

radial relief: relief in a radial direction measured in the plane of rotation. It can be measured by the amount of indicator drop at a given radius in a given amount of angular rotation.

secondary relief: see preferred term *clearance.*

side relief: see preferred term *axial relief* under *relief.*

shank: that projecting portion of a cutter which locates and drives the cutter in the machine spindle or adapter.

spiral: see preferred term *helical.*

stagger: the intentional misalignment of cutting edges or teeth in a cutter. See also *alternate.*

straight shank: a cutter shank that is cylindrical.

tang: the flatted end portion of a shank that mates with a slot in the driving spindle or adapter.

tangential rake: see *rake.*

taper shank: a shank made to fit a specified (conical) taper socket.

tooth: a projection on a cutter that carries a cutting edge.

tooth face: the surface of the tooth on which the chip impinges.

tooth spacing: see preferred term *circular pitch.*

weldon shank: a straight shank with special flats for driving and locating the tool (see Table 73).

3 MILLING CUTTER AND END MILL DIMENSIONS

Dimensions of standard sizes are given in Tables 1 through 68.

4 MILLING CUTTER AND END MILL ELEMENTS

Dimensions and tolerances are given in Tables 69 through 74.

5 MILLING CUTTER AND END MILL TOLERANCES

Tolerances for standard sizes are given in Tables 73 and 74.

Copyright ASME International
Provided by IHS under license with ASME
No reproduction or networking permitted without license from IHS
Not for Resale

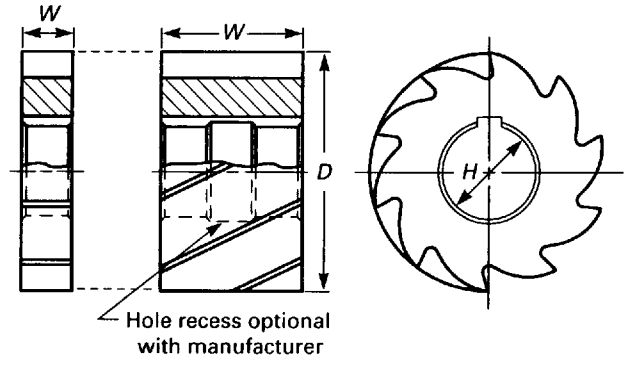

TABLE 1 PLAIN MILLING CUTTERS, LIGHT DUTY: HIGH-SPEED STEEL

Cutter Dia, *D*	Hole Dia, *H*	Face Width, *W*	Cutter Dia, *D*	Hole Dia, *H*	Face Width, *W*
2 1/2	1	3/16	3	1 1/4	1 1/4
2 1/2	1	1/4	3	1	1 1/2
2 1/2	1	5/16	3	1 1/4	1 1/2
2 1/2	1	3/8	3	1 1/4	2
2 1/2	1	1/2	3	1 1/4	3
2 1/2	1	5/8			
			4	1	1/4
2 1/2	1	3/4	4	1	5/16
2 1/2	1	1	4	1	3/8
2 1/2	1	1 1/2	4	1 1/4	3/8
2 1/2	1	2	4	1 1/4	1/2
2 1/2	1	3	4	1 1/4	5/8
3	1	3/16	4	1 1/4	3/4
3	1	1/4	4	1 1/4	1
3	1	5/16	4	1 1/4	1 1/2
3	1	3/8	4	1 1/4	2
3	1 1/4	1/2	4	1 1/4	3
			4	1 1/4	4
3	1 1/4	5/8			
3	1	5/8			
3	1 1/4	3/4			
3	1	3/4			
3	1 1/4	1			

GENERAL NOTES:

(a) All dimensions are given in inches.

(b) For keyway dimensions, see Table 69.

(c) For tolerances, see Table 73.

(d) Cutters less than 3/4 in. face have straight teeth.

(e) Cutters 3/4 in. face and wider have a helix angle of not less than 15 deg nor greater than 25 deg (left-hand helix not shown).

Copyright ASME International
Provided by IHS under license with ASME
No reproduction or networking permitted without license from IHS
Not for Resale

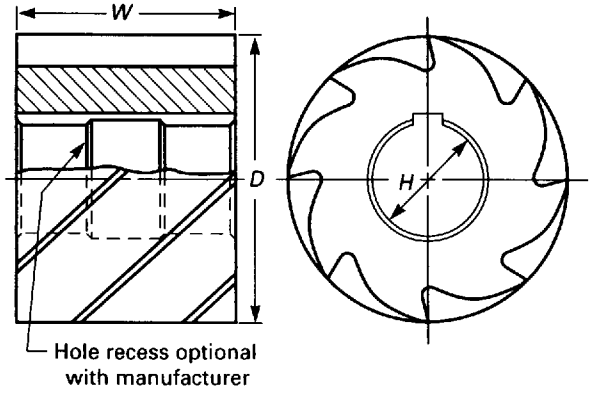

TABLE 2 PLAIN MILLING CUTTERS, HEAVY DUTY: HIGH-SPEED STEEL

Cutter Dia, *D*	Hole Dia, *H*	Face Width, *W*
2½	1	2
2½	1	4
3	1¼	2
3	1¼	2½
3	1¼	3
3	1¼	4
3	1¼	6
4	1½	2
4	1½	3
4	1½	4
4	1½	6

GENERAL NOTES:
(a) All dimensions are given in inches.
(b) For keyway dimensions, see Table 69.
(c) For tolerances, see Table 73.
(d) Cutters have a helix angle of not less than 25 deg nor greater than 45 deg (left-hand helix shown).

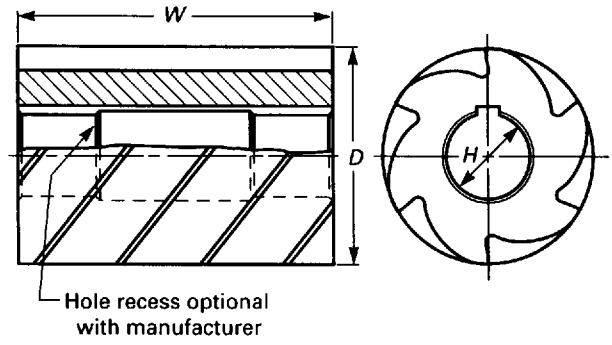

TABLE 3 PLAIN MILLING CUTTERS, HIGH HELIX: HIGH-SPEED STEEL

Cutter Dia, *D*	Hole Dia, *H*	Face Width, *W*
3	1¼	4
3	1¼	6
4	1½	8

GENERAL NOTES:
(a) All dimensions are given in inches.
(b) For keyway dimensions, see Table 69.
(c) For tolerances, see Table 73.
(d) Cutters have a helix angle of not less than 45 deg nor greater than 52 deg (left-hand helix shown).

Copyright ASME International
Provided by IHS under license with ASME
No reproduction or networking permitted without license from IHS
Not for Resale

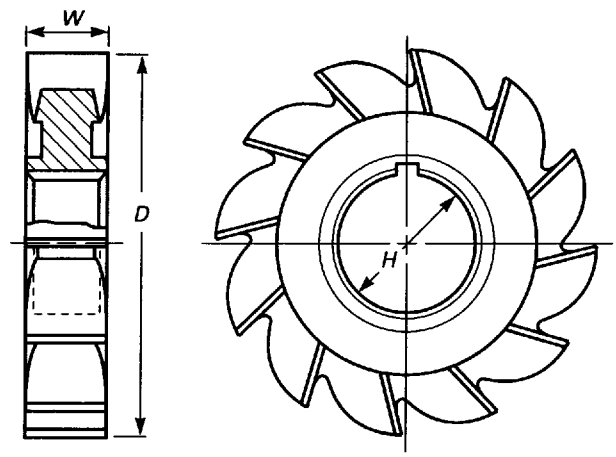

TABLE 4 SIDE MILLING CUTTERS: HIGH-SPEED STEEL

Cutter Dia, *D*	Hole Dia, *H*	Face Width, *W*	Cutter Dia, *D*	Hole Dia, *H*	Face Width, *W*
2	5/8	3/16	4	1	7/8
2	5/8	1/4	5	1	1/2
2	5/8	3/8	5	1 1/4	1/2
2 1/2	7/8	1/4	5	1	5/8
2 1/2	7/8	3/8	5	1 1/4	5/8
2 1/2	7/8	1/2	5	1	3/4
3	1	1/4	5	1 1/4	3/4
3	1	5/16	5	1 1/4	1
3	1	3/8	6	1	1/2
3	1	7/16	6	1 1/4	1/2
3	1	1/2	6	1 1/4	5/8
4	1	1/4	6	1 1/4	3/4
4	1	3/8	6	1 1/4	1
4	1	1/2	7	1 1/4	3/4
4	1 1/4	1/2	7	1 1/2	3/4
4	1	5/8	8	1 1/4	3/4
4	1 1/4	5/8	8	1 1/2	3/4
4	1	3/4	8	1 1/4	1
4	1 1/4	3/4	8	1 1/2	1

GENERAL NOTES:
(a) All dimensions are given in inches.
(b) For keyway dimensions, see Table 69.
(c) For tolerances, see Table 73.

Copyright ASME International
Provided by IHS under license with ASME
No reproduction or networking permitted without license from IHS
Not for Resale

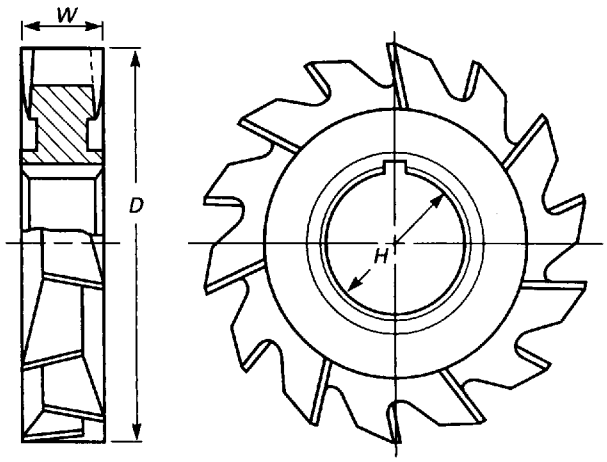

TABLE 5 STAGGERED-TOOTH SIDE MILLING CUTTERS: HIGH-SPEED STEEL

Cutter Dia, *D*	Hole Dia, *H*	Face Width, *W*
2 1/2	7/8	1/4
2 1/2	7/8	5/16
2 1/2	7/8	3/8
2 1/2	7/8	1/2
3	1	3/16
3	1	1/4
3	1	5/16
3	1	3/8
3	1 1/4	1/2
3	1 1/4	5/8
3	1 1/4	3/4
4	1 1/4	1/4
4	1 1/4	5/16
4	1 1/4	3/8
4	1 1/4	7/16
4	1 1/4	1/2
4	1 1/4	5/8
4	1 1/4	3/4
4	1 1/4	7/8
5	1 1/4	1/2
5	1 1/4	5/8
5	1 1/4	3/4
6	1 1/4	3/8
6	1 1/4	1/2
6	1 1/4	5/8
6	1 1/4	3/4
6	1 1/4	7/8
6	1 1/4	1
8	1 1/2	3/8
8	1 1/2	1/2
8	1 1/2	5/8
8	1 1/2	3/4
8	1 1/2	1

GENERAL NOTES:
(a) All dimensions are given in inches.
(b) For keyway dimensions, see Table 69.
(c) For tolerances, see Table 73.

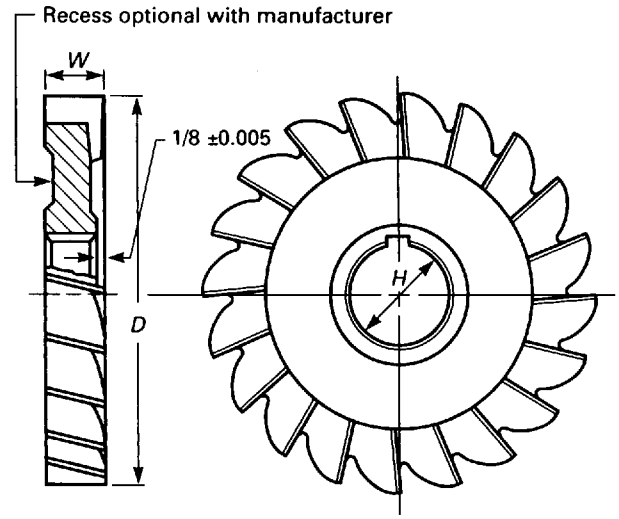

TABLE 6 HALF-SIDE MILLING CUTTERS: HIGH-SPEED STEEL

Cutter Dia, *D*	Hole Dia, *H*	Face Width, *W*
4	1 1/4	3/4
5	1 1/4	3/4
6	1 1/4	3/4

GENERAL NOTES:
(a) All dimensions are given in inches.
(b) For keyway dimensions, see Table 69.
(c) For tolerances, see Table 73.
(d) Right-hand cutters have right-hand helix, and left-hand cutters have left-hand helix. Right-hand cutter is shown.

Copyright ASME International
Provided by IHS under license with ASME
No reproduction or networking permitted without license from IHS
Not for Resale

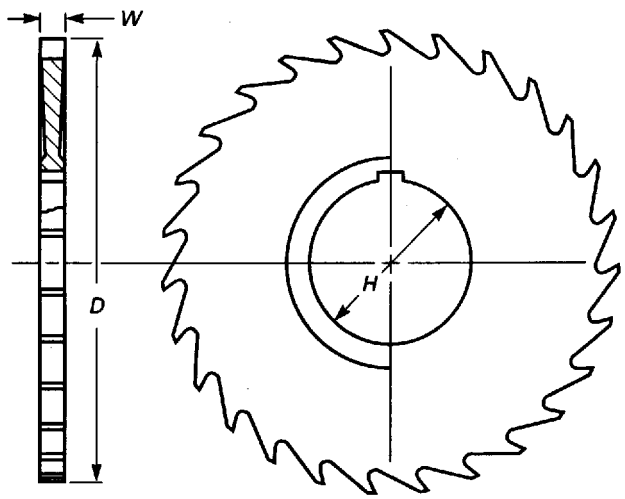

TABLE 7 PLAIN METAL SLITTING SAWS: HIGH-SPEED STEEL

Cutter Dia, *D*	Hole Dia, *H*	Face Width, *W*
2 1/2	7/8	1/32
2 1/2	7/8	3/64
2 1/2	7/8	1/16
2 1/2	7/8	3/32
2 1/2	7/8	1/8
3	1	1/32
3	1	3/64
3	1	1/16
3	1	3/32
3	1	1/8
3	1	5/32
4	1	1/32
4	1	3/64
4	1	1/16
4	1	3/32
4	1	1/8
4	1	5/32
4	1	3/16
5	1	1/16
5	1	3/32
5	1	1/8
5	1 1/4	1/8
6	1	1/16
6	1	3/32
6	1	1/8
6	1 1/4	1/8
6	1 1/4	3/16
8	1	1/8
8	1 1/4	1/8

GENERAL NOTES:
(a) All dimensions are given in inches.
(b) For keyway dimensions, see Table 69.
(c) For tolerances, see Table 73.
(d) Hub is optional with manufacturer.
(e) Sides are concaved to arbor hole or hub.

Copyright ASME International
Provided by IHS under license with ASME
No reproduction or networking permitted without license from IHS
Not for Resale

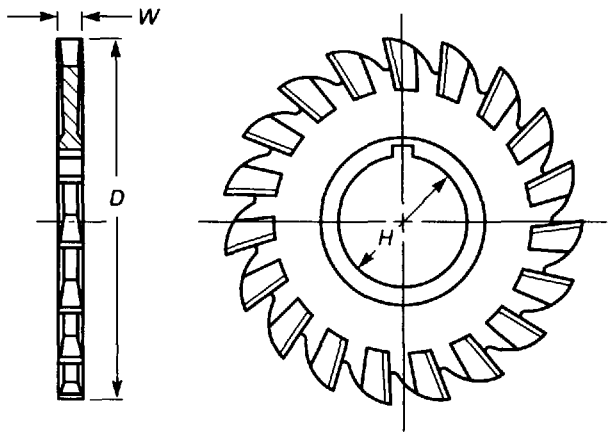

TABLE 8 METAL SLITTING SAWS WITH SIDE TEETH: HIGH-SPEED STEEL

Cutter Dia, *D*	Hole Dia, *H*	Face Width, *W*
2 1/2	7/8	1/16
2 1/2	7/8	3/32
2 1/2	7/8	1/8
3	1	1/16
3	1	3/32
3	1	1/8
3	1	5/32
4	1	1/16
4	1	3/32
4	1	1/8
4	1	5/32
4	1	3/16
5	1	1/16
5	1	3/32
5	1	1/8
5	1 1/4	1/8
5	1	5/32
5	1	3/16
6	1	1/16
6	1	3/32
6	1	1/8
6	1 1/4	1/8
6	1	3/16
6	1 1/4	3/16
8	1	1/8
8	1 1/4	1/8
8	1 1/4	3/16

GENERAL NOTES:
(a) All dimensions are given in inches.
(b) For keyway dimensions, see Table 69.
(c) For tolerances, see Table 73.

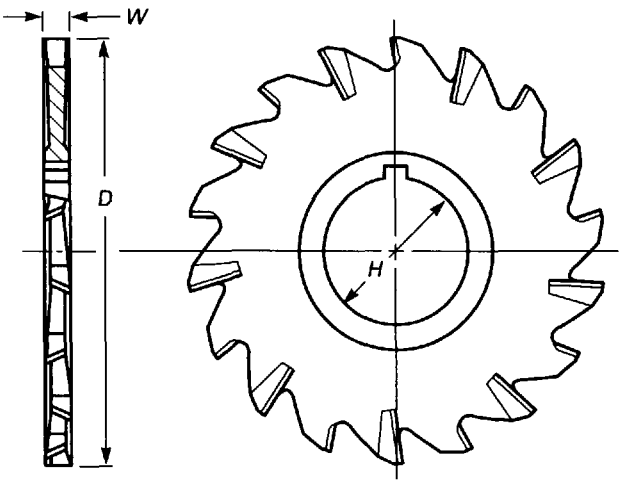

TABLE 9 METAL SLITTING SAWS WITH STAGGERED PERIPHERAL AND SIDE TEETH: HIGH-SPEED STEEL

Cutter Dia, *D*	Hole Dia, *H*	Face Width, *W*
3	1	3/16
4	1	3/16
5	1	3/16
5	1	1/4
6	1	3/16
6	1 1/4	3/16
6	1	1/4
6	1 1/4	1/4
8	1 1/4	3/16
8	1 1/4	1/4
10	1 1/4	3/16
10	1 1/4	1/4
12	1 1/2	1/4
12	1 1/2	5/16

GENERAL NOTES:
(a) All dimensions are given in inches.
(b) For keyway dimensions, see Table 69.
(c) For tolerances, see Table 73.

Copyright ASME International
Provided by IHS under license with ASME
No reproduction or networking permitted without license from IHS
Not for Resale

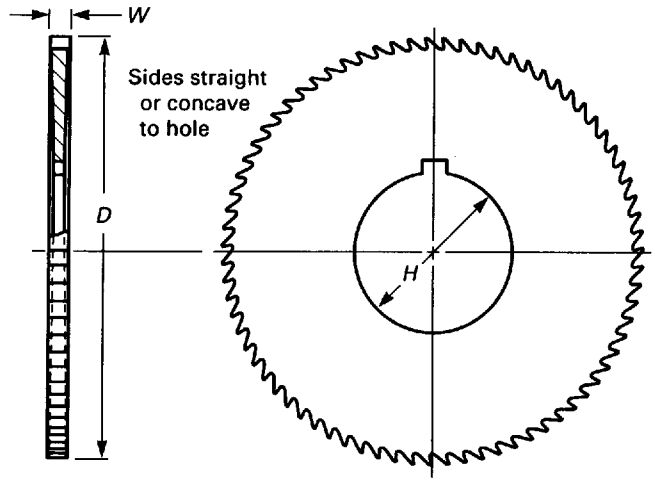

TABLE 10 SCREW SLOTTING CUTTERS: HIGH-SPEED STEEL

Cutter Dia, *D*	American Wire Gage No.	No. of Teeth	Hole Dia, *H*	Face Width, *W*	Cutter Dia, *D*	American Wire Gage No.	No. of Teeth	Hole Dia, *H*	Face Width, *W*
2 3/4	7	72	1	0.144	2 1/4	16	60	5/8	0.051
2 3/4	8	72	1	0.128	2 1/4	17	60	5/8	0.045
2 3/4	9	72	1	0.114	2 1/4	18	60	5/8	0.040
2 3/4	10	72	1	0.102	2 1/4	19	60	5/8	0.036
2 3/4	11	72	1	0.091	2 1/4	20	60	5/8	0.032
2 3/4	12	72	1	0.081	2 1/4	21	60	5/8	0.028
2 3/4	13	72	1	0.072	2 1/4	22	60	5/8	0.025
2 3/4	14	72	1	0.064	2 1/4	23	60	5/8	0.023
2 3/4	15	72	1	0.057	2 1/4	24	60	5/8	0.020
2 3/4	16	72	1	0.051	1 3/4	14	90	5/8	0.064
2 3/4	17	72	1	0.045	1 3/4	15	90	5/8	0.057
2 3/4	18	72	1	0.040	1 3/4	16	90	5/8	0.051
2 3/4	19	72	1	0.036	1 3/4	17	90	5/8	0.045
2 3/4	20	72	1	0.032	1 3/4	18	90	5/8	0.040
2 3/4	21	72	1	0.028	1 3/4	19	90	5/8	0.036
2 3/4	22	72	1	0.025	1 3/4	20	90	5/8	0.032
2 3/4	23	72	1	0.023	1 3/4	21	90	5/8	0.028
2 3/4	24	72	1	0.020	1 3/4	22	90	5/8	0.025
2 1/4	14	60	5/8	0.064	1 3/4	23	90	5/8	0.023
2 1/4	15	60	5/8	0.057	1 3/4	24	90	5/8	0.020

GENERAL NOTES:
(a) All dimensions are given in inches.
(b) For keyway dimensions, see Table 69.
(c) For tolerances, see Table 73.

Copyright ASME International
Provided by IHS under license with ASME
No reproduction or networking permitted without license from IHS
Not for Resale

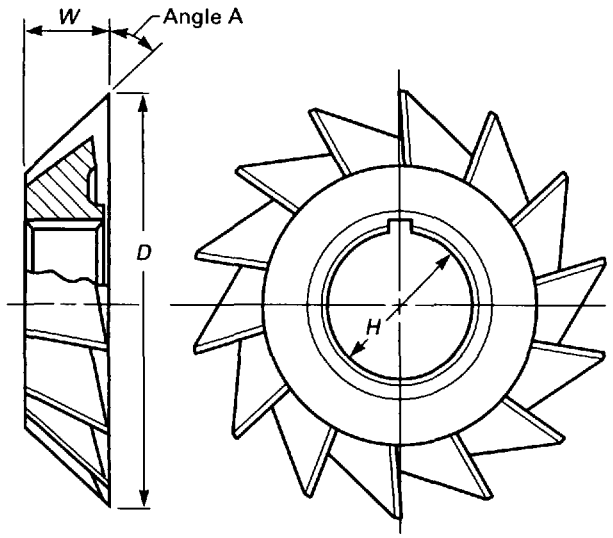

TABLE 11 SINGLE-ANGLE MILLING CUTTERS WITH STRAIGHT HOLES: HIGH-SPEED STEEL

Cutter Dia, *D*	Included Angle Deg, *A*	Hole Dia, *H*	Face Width, *W*
2 3/4	45	1	1/2
2 3/4	60	1	1/2
3	45	1 1/4	1/2
3	60	1 1/4	1/2

GENERAL NOTES:
(a) All dimensions are given in inches.
(b) For keyway dimensions, see Table 69.
(c) For tolerances, see Table 73.
(d) Right-hand and left-hand cutters are standard. Right-hand cutter is shown.

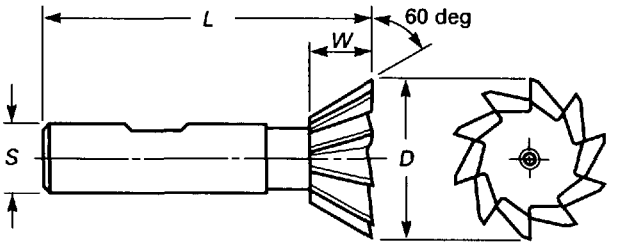

TABLE 12 60 deg SINGLE-ANGLE MILLING CUTTERS WITH WELDON SHANKS: HIGH-SPEED STEEL

Largest Cutter Dia, *D*	Overall Length, *L*	Shank Dia, *S*	Cutter Width, *W*
3/4	2 1/8	3/8	5/16
1 3/8	2 7/8	5/8	9/16
1 7/8	3 1/4	7/8	13/16
2 1/4	3 3/4	1	1 1/16

GENERAL NOTES:
(a) All dimensions are given in inches.
(b) For tolerances, see Table 73.
(c) For shank dimensions, see Table 70A.
(d) Right-hand cutters are standard.

Copyright ASME International
Provided by IHS under license with ASME
No reproduction or networking permitted without license from IHS
Not for Resale

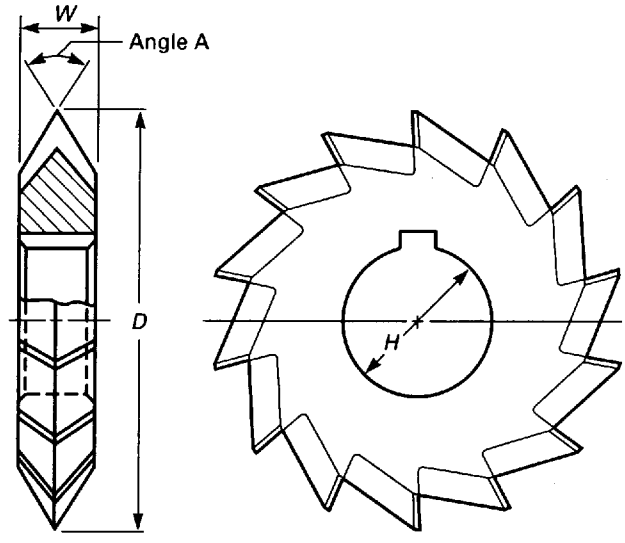

TABLE 13 DOUBLE-ANGLE MILLING CUTTERS: HIGH-SPEED STEEL

Cutter Dia., *D*	Included Angle Deg, *A*	Hole Dia., *H*	Face Width, *W*
2¾	45	1	½
2¾	60	1	½
2¾	90	1	½

GENERAL NOTES:
(a) All dimensions are given in inches.
(b) For keyway dimensions, see Table 69.
(c) For tolerances, see Table 73.

Copyright ASME International
Provided by IHS under license with ASME
No reproduction or networking permitted without license from IHS
Not for Resale

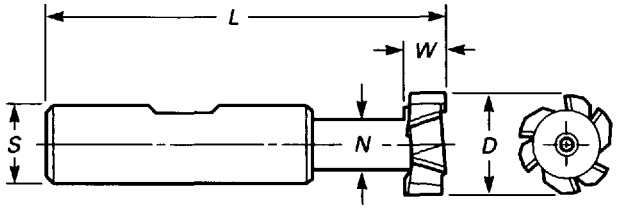

TABLE 14 T-SLOT MILLING CUTTERS WITH STAGGERED TEETH AND WELDON SHANKS: HIGH-SPEED STEEL

Cutter Dia., *D*	Bolt Size	Overall Length, *L*	Neck Dia., *N*	Shank Dia., *S*	Cutter Width, *W*
9/16	1/4	2 19/32	17/64	1/2	15/64
21/32	5/16	2 11/16	21/64	1/2	17/64
25/32	3/8	3 1/4	13/32	3/4	21/64
31/32	1/2	3 7/16	17/32	3/4	25/64
1 1/4	5/8	3 15/16	21/32	1	31/64
1 15/32	3/4	4 7/16	25/32	1	5/8
1 27/32	1	4 13/16	1 1/32	1 1/4	53/64

GENERAL NOTES:
(a) All dimensions are given in inches.
(b) For tolerances, see Table 73.
(c) For shank dimensions, see Table 70A.
(d) Right-hand cutters are standard.

Copyright ASME International
Provided by IHS under license with ASME
No reproduction or networking permitted without license from IHS Not for Resale

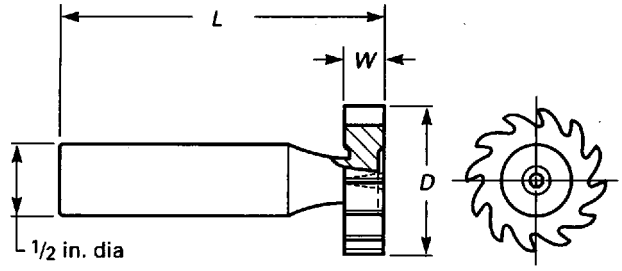

TABLE 15 WOODRUFF KEYSEAT MILLING CUTTERS, SHANK TYPE: HIGH-SPEED STEEL

Nom. Cutter Dia, *D* [Note (2)]	Cutter No. [Note (1)]	Overall Length, *L*	Face Width, W	Nom. Cutter Dia, *D* [Note (2)]	Cutter No. [Note (1)]	Overall Length, *L*	Face Width, W
1/4	202	2 1/16	1/16	1	608	2 3/16	3/16
5/16	202 1/2	2 1/16	1/16	1	708	2 7/32	7/32
5/16	302 1/2	2 3/32	3/32	1	808	2 1/4	1/4
3/8	203	2 1/16	1/16	1	1008	2 5/16	5/16
3/8	303	2 3/32	3/32	1	1208	2 3/8	3/8
3/8	403	2 1/8	1/8	1 1/8	609	2 3/16	3/16
1/2	204	2 1/16	1/16	1 1/8	709	2 7/32	7/32
1/2	304	2 3/32	3/32	1 1/8	809	2 1/4	1/4
1/2	404	2 1/8	1/8	1 1/8	1009	2 5/16	5/16
5/8	305	2 3/32	3/32	1 1/4	610	2 3/16	3/16
5/8	405	2 1/8	1/8	1 1/4	710	2 7/32	7/32
5/8	505	2 5/32	5/32	1 1/4	810	2 1/4	1/4
5/8	605	2 3/16	3/16	1 1/4	1010	2 5/16	5/16
3/4	406	2 1/8	1/8	1 1/4	1210	2 3/8	3/8
3/4	506	2 5/32	5/32	1 3/8	811	2 1/4	1/4
3/4	606	2 3/16	3/16	1 3/8	1011	2 5/16	5/16
3/4	806	2 1/4	1/4	1 3/8	1211	2 3/8	3/8
7/8	507	2 5/32	5/32	1 1/2	812	2 1/4	1/4
7/8	607	2 3/16	3/16	1 1/2	1012	2 5/16	5/16
7/8	707	2 7/32	7/32	1 1/2	1212	2 3/8	3/8
7/8	807	2 1/4	1/4				

GENERAL NOTES:
(a) All dimensions are given in inches.
(b) For tolerances, see Table 73.
(c) The amount of oversize is incorporated in the tolerances.
(d) These cutters are standard with right-hand cut. All sizes have 1/2 in. diameter straight shank.

NOTES:
(1) The cutter numbers indicate nominal key dimensions or cutter sizes. The last two digits give the nominal diameter in eighths of an inch, and the digits preceding the last two give the nominal width in thirty-seconds of an inch. Thus, cutter No. 204 indicates a size 2/32 in. x 4/8 in. or 1/16 in. wide x 1/2 in. in diameter. See ASME B17.2-1967 (R1990), Woodruff Keys and Keyseats.
(2) Furnished oversize to allow for sharpening.

Copyright ASME International
Provided by IHS under license with ASME
No reproduction or networking permitted without license from IHS
Not for Resale

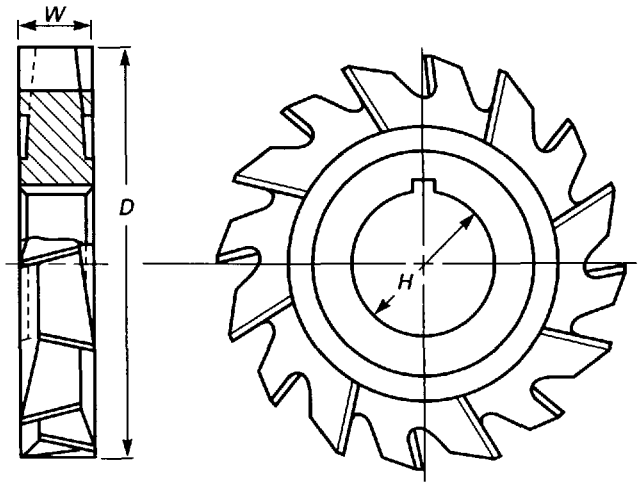

TABLE 16 WOODRUFF KEYSEAT MILLING CUTTERS WITH STAGGERED TEETH, ARBOR TYPE: HIGH-SPEED STEEL

Nom. Cutter Dia, *D* [Note (1)]	Cutter No. [Note (2)]	Hole Dia, *H*	Face Width, *W*
$2\frac{1}{8}$	617	$\frac{3}{4}$	$\frac{3}{16}$
$2\frac{1}{8}$	817	$\frac{3}{4}$	$\frac{1}{4}$
$2\frac{1}{8}$	1017	$\frac{3}{4}$	$\frac{5}{16}$
$2\frac{1}{8}$	1217	$\frac{3}{4}$	$\frac{3}{8}$
$2\frac{3}{4}$	822	1	$\frac{1}{4}$
$2\frac{3}{4}$	1022	1	$\frac{5}{16}$
$2\frac{3}{4}$	1222	1	$\frac{3}{8}$
$2\frac{3}{4}$	1422	1	$\frac{7}{16}$
$2\frac{3}{4}$	1622	1	$\frac{1}{2}$
$3\frac{1}{2}$	1228	1	$\frac{3}{8}$
$3\frac{1}{2}$	1628	1	$\frac{1}{2}$
$3\frac{1}{2}$	1828	1	$\frac{9}{16}$
$3\frac{1}{2}$	2028	1	$\frac{5}{8}$
$3\frac{1}{2}$	2428	1	$\frac{3}{4}$

GENERAL NOTES:

(a) All dimensions are given in inches.

(b) For keyway dimensions, see Table 69.

(c) For tolerances, see Table 73.

(d) Tolerances are applied to the oversize diameter.

NOTES:

(1) Furnished $\frac{1}{32}$ in. larger than listed diameters to allow for sharpening.

(2) The cutter numbers indicate nominal key dimensions or cutter sizes. The last two digits give the nominal diameter in eighths of an inch and the digits preceding the last two give the nominal width in thirty-seconds of an inch. Thus, cutter No. 617 indicates a size $\frac{6}{32}$ in. × $1\frac{7}{8}$ in. or $\frac{3}{16}$ in. wide × $2\frac{1}{8}$ in. in diameter. See ASME B17.2-1967 (R1990), Woodruff Keys and Keyseats.

Copyright ASME International
Provided by IHS under license with ASME
No reproduction or networking permitted without license from IHS
Not for Resale

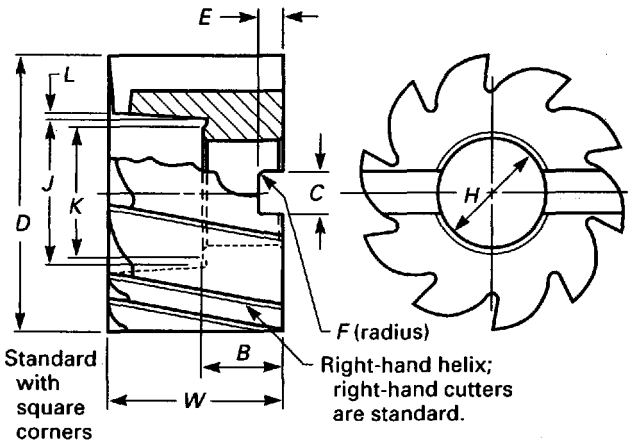

TABLE 17A SHELL MILLS: HIGH-SPEED STEEL

General Dimension				Driving Slot			Counterbore		
Cutter Dia, *D*	Bearing Length, *B*	Hole Dia, *H*	Cutter Width, *W*	Width, *C*	Depth, *E*	Radius, *F*	Dia, *J*	Dia, *K*	Angular Increase, deg, *L*
1 1/4	5/8	1/2	1	1/4	5/32	1/64	11/16	5/8	0
1 1/2	5/8	1/2	1 1/8	1/4	5/32	1/64	11/16	5/8	0
1 3/4	3/4	3/4	1 1/4	5/16	3/16	1/32	15/16	7/8	0
2	3/4	3/4	1 3/8	5/16	3/16	1/32	15/16	7/8	0
2 1/4	3/4	1	1 1/2	3/8	7/32	1/32	1 1/4	1 3/16	0
2 1/2	3/4	1	1 5/8	3/8	7/32	1/32	1 3/8	1 3/16	0
2 3/4	3/4	1	1 5/8	3/8	7/32	1/32	1 1/2	1 3/16	5
3	3/4	1 1/4	1 3/4	1/2	9/32	1/32	1 21/32	1 1/2	5
3 1/2	3/4	1 1/4	1 7/8	1/2	9/32	1/32	1 11/16	1 1/2	5
4	1	1 1/2	2 1/4	5/8	3/8	1/16	2 1/32	1 7/8	5
4 1/2	1	1 1/2	2 1/4	5/8	3/8	1/16	2 1/16	1 7/8	10
5	1	1 1/2	2 1/4	5/8	3/8	1/16	2 9/16	1 7/8	10
6	1	2	2 1/4	3/4	7/16	7/16	2 13/16	2 1/2	15

GENERAL NOTES:
(a) All dimensions are given in inches.
(b) See special tolerances in Table 17B.
(c) Right-hand cutters are standard.

TABLE 17B TOLERANCES FOR SHELL MILLS: HIGH-SPEED STEEL

Element	Direction	Range	Tolerance
Cutter dia	Plus	All sizes	1/64
Cutter width	Plus or minus	All sizes	1/64
Hole dia	Plus	All sizes	0.0005
Bearing length	Plus	All sizes	1/64
Driving slot width	Plus not less than	All sizes	0.008
	Plus not more than		0.012
Driving slot depth	Plus	All sizes	1/64
C'bore dia	Plus or minus	All sizes	1/64
Hub dia	Plus or minus	All sizes	1/64

GENERAL NOTES:
(a) All dimensions are given in inches.
(b) For radial and axial runout, see Table 73.

Copyright ASME International
Provided by IHS under license with ASME
No reproduction or networking permitted without license from IHS
Not for Resale

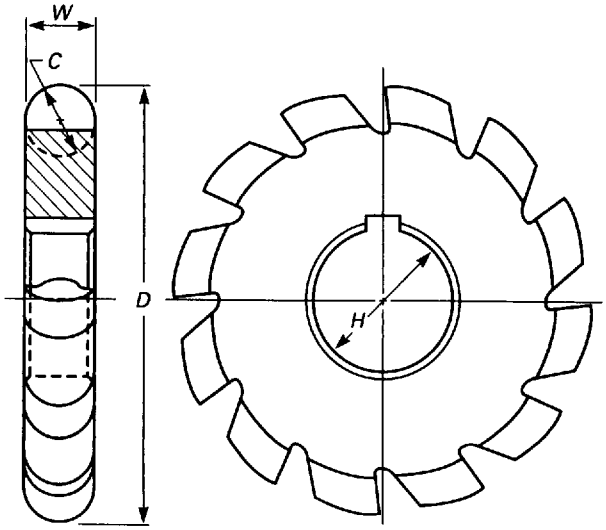

TABLE 18 CONVEX MILLING CUTTERS, FORM RELIEVED: HIGH-SPEED STEEL

Cutter Dia, *D*	Cutter Size Dia of Circle, *C*	Hole Dia, *H*	Face Width, *W*
2 1/4	1/8	1	1/8
2 1/4	3/16	1	3/16
2 1/2	1/4	1	1/4
2 3/4	5/16	1	5/16
2 3/4	3/8	1	3/8
3	7/16	1	7/16
3	1/2	1	1/2
3 1/2	5/8	1 1/4	5/8
3 3/4	3/4	1 1/4	3/4
4	7/8	1 1/4	7/8
4 1/4	1	1 1/4	1

GENERAL NOTES:
(a) All dimensions are given in inches.
(b) For keyway dimensions, see Table 69.
(c) For tolerances, see Table 73.

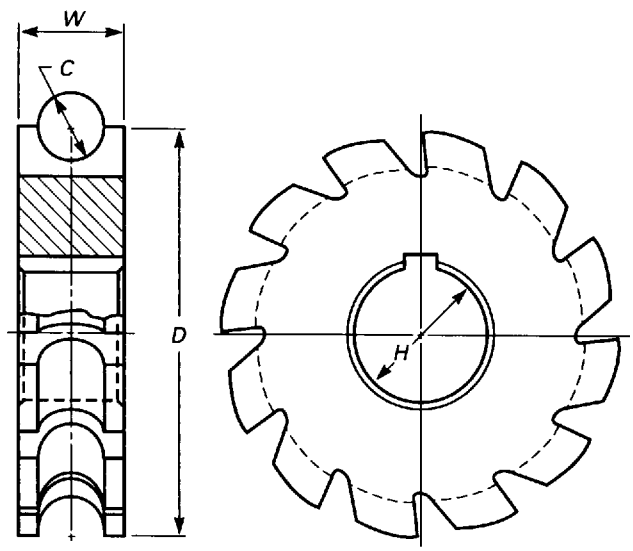

TABLE 19 CONCAVE MILLING CUTTERS, FORM RELIEVED: HIGH-SPEED STEEL

Cutter Dia, *D*	Cutter Size Dia of Circle, *C*	Hole Dia, *H*	Face Width, *W*
2 1/4	1/8	1	1/4
2 1/4	3/16	1	3/8
2 1/2	1/4	1	7/16
2 3/4	5/16	1	9/16
2 3/4	3/8	1	5/8
3	7/16	1	3/4
3	1/2	1	13/16
3 1/2	5/8	1 1/4	1
3 3/4	3/4	1 1/4	1 3/16
4	7/8	1 1/4	1 3/8
4 1/4	1	1 1/4	1 9/16

GENERAL NOTES:
(a) All dimensions are given in inches.
(b) For keyway dimensions, see Table 69.
(c) For tolerances, see Table 73.

Copyright ASME International
Provided by IHS under license with ASME
No reproduction or networking permitted without license from IHS
Not for Resale

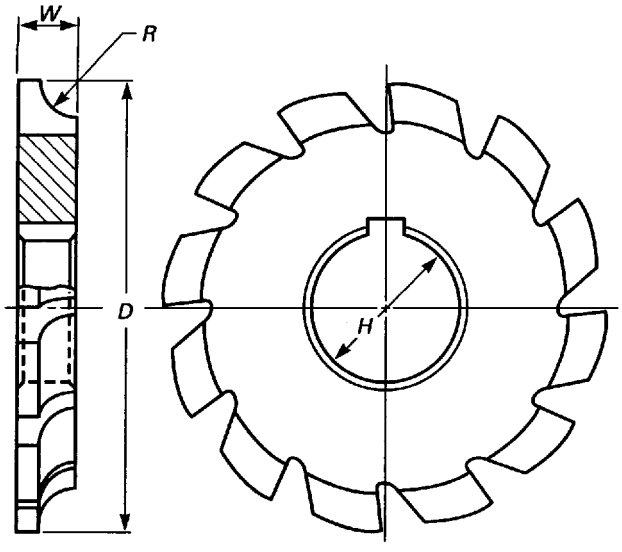

TABLE 20 CORNER ROUNDING MILLING CUTTERS, ARBOR TYPE, FORM RELIEVED: HIGH-SPEED STEEL

Cutter Dia, *D*	Hole Dia, *H*	Cutter Size Radius, *R*	Face Width, *W*
2 1/2	1	1/8	1/4
3	1	1/4*	13/32
3 3/4	1 1/4	3/8	9/16
4 1/4	1 1/4	1/2	3/4
4 1/4	1 1/4	5/8	15/16

GENERAL NOTES:
(a) All dimensions are given in inches.
(b) For keyway dimensions, see Table 69.
(c) For tolerances, see Table 73.
(d) Right-hand cutters are standard. Right-hand cutter is shown. 1/4 cutter (*) is also standard in left hand.

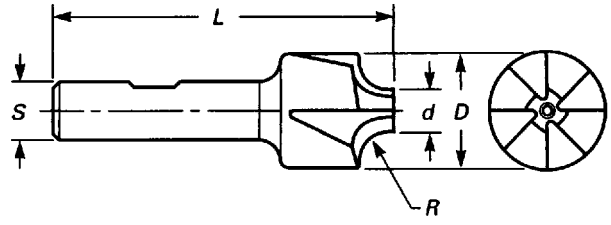

TABLE 21 CORNER ROUNDING CUTTERS WITH WELDON SHANKS, FORM RELIEVED: HIGH-SPEED STEEL

Cutter Outside Dia (OD), *D*	Cutter End Dia, *d*	Overall Length, *L*	Circle Radius, *R*	Shank Dia, *S*
7/16	1/4	2 1/2	1/16	3/8
1/2	1/4	2 1/2	3/32	3/8
5/8	1/4	3	1/8	1/2
3/4	5/16	3	5/32	1/2
7/8	5/16	3	3/16	1/2
1	3/8	3	1/4	1/2
1 1/8	3/8	3 1/4	5/16	1/2
1 1/4	3/8	3 1/2	3/8	1/2
7/8	5/16	3 1/8	3/16	3/4
1	3/8	3 1/4	1/4	3/4
1 1/8	3/8	3 1/2	5/16	7/8
1 1/4	3/8	3 3/4	3/8	7/8
1 3/8	3/8	4	7/16	1
1 1/2	3/8	4 1/8	1/2	1

GENERAL NOTES:
(a) All dimensions are given in inches.
(b) For tolerances, see Table 73.
(c) For shank dimensions, see Table 70A.
(d) Right-hand cutters are standard.

Copyright ASME International
Provided by IHS under license with ASME
No reproduction or networking permitted without license from IHS
Not for Resale

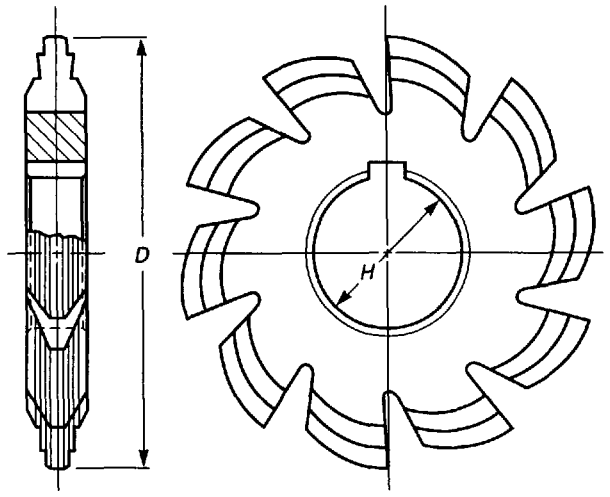

TABLE 22 ROUGHING GEAR MILLING CUTTERS FOR GEARS WITH 14½ deg PRESSURE ANGLE, FORM RELIEVED: HIGH-SPEED STEEL

Cutter Dia, *D*	Diametral Pitch	Hole Dia, *H*
8½	1	2
7¾	1¼	2
7	1½	1¾
6½	1¾	1¾
6½	2	1¾
5¾	2	1½
6⅛	2½	1¾
5¾	2½	1½
5⅝	3	1¾
5¼	3	1½
4¾	3	1¼
4¾	4	1¾
4½	4	1½
4¼	4	1¼
3⅝	4	1
4⅜	5	1¾
4¼	5	1½
3¾	5	1¼
3⅜	5	1
3⅞	6	1½
3½	6	1¼
3⅛	6	1
3⅜	7	1¼
2⅞	7	1
3¼	8	1¼
2⅞	8	1

GENERAL NOTES:
(a) All dimensions are given in inches.
(b) For keyway dimensions, see Table 69.
(c) For tolerances, see Table 73.
(d) Design of chip breakers is optional with manufacturer. Roughing cutters are made with No. 1 cutter form only. See Table 23A.

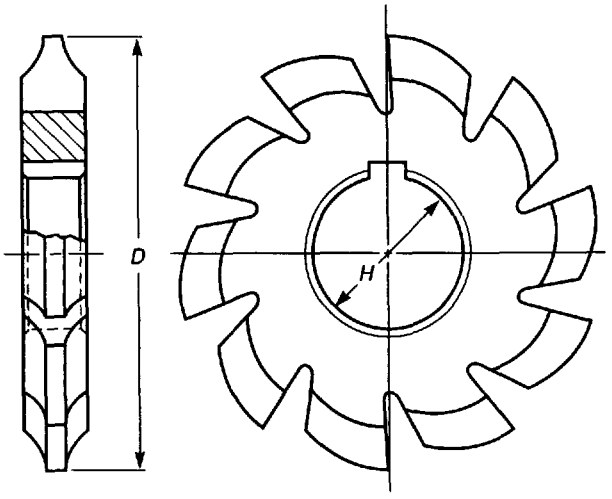

TABLE 23A FINISHING GEAR MILLING CUTTERS FOR GEARS WITH 14½ deg PRESSURE ANGLE, FORM RELIEVED: HIGH-SPEED STEEL

Cutter Form Number	Range of Teeth
1	135 through a rack
2	55 through 134
3	35 through 54
4	26 through 34
5	21 through 25
6	17 through 20
7	14 through 16
8	12 and 13

GENERAL NOTE:
On the basis of eight different ranges of numbers of gear teeth required (from 12 to a rack), eight cutters, designated by numbers, are made for each diametral pitch. The arrangement applies to cutters listed in Tables 23A, 23B, and 24.

Copyright ASME International
Provided by IHS under license with ASME
No reproduction or networking permitted without license from IHS
Not for Resale

TABLE 23B FINISHING GEAR MILLING CUTTERS FOR GEARS WITH 14½ deg PRESSURE ANGLE, FORM RELIEVED: HIGH-SPEED STEEL

Cutter Dia., *D*	Diametral Pitch	Hole Dia., *H*	Cutter Dia., *D*	Diametral Pitch	Hole Dia., *H*
8½	1	2	3⅛	9	1¼
7¾	1¼	2	2¾	9	1
7	1½	1¾	3	10	1¼
6½	1¾	1¾	2¾	10	1
6½	2	1¾	2⅜	10	⅞
5¾	2	1½	2⅝	11	1
6⅛	2½	1¾	2⅜	11	⅞
5¾	2½	1½	2⅞	12	1¼
5⅝	3	1¾	2⅝	12	1
5¼	3	1½	2¼	12	⅞
4¾	3	1¼	2½	14	1
4¾	4	1¾	2⅛	14	⅞
4½	4	1½	2½	16	1
4¼	4	1¼	2⅛	16	⅞
3⅝	4	1	2⅜	18	1
4⅜	5	1¾	2	18	⅞
4¼	5	1½	2⅜	20	1
3¾	5	1¼	2	20	⅞
3⅜	5	1	2¼	22	1
4¼	6	1¾	2	22	⅞
3⅞	6	1½	2¼	24	1
3½	6	1¼	1¾	24	⅞
3⅛	6	1	1¾	26	⅞
3⅝	7	1½	1¾	28	⅞
3⅜	7	1¼	1¾	30	⅞
2⅞	7	1	1¾	32	⅞
3½	8	1½	1¾	36	⅞
3¼	8	1¼	1¾	40	⅞
2⅞	8	1	1¾	48	⅞

GENERAL NOTES:
(a) All dimensions are given in inches.
(b) For keyway dimensions, see Table 69.
(c) For tolerances, see Table 73.
(d) For cutter number relative to numbers of gear teeth, see Table 23A.

Copyright ASME International
Provided by IHS under license with ASME
No reproduction or networking permitted without license from IHS
Not for Resale

TABLE 24 GEAR MILLING CUTTERS FOR MITRE AND BEVEL GEARS WITH 14½ deg PRESSURE ANGLES, FORM RELIEVED: HIGH-SPEED STEEL

Cutter Dia., *D*	Diametral Pitch	Hole Dia., *H*
4	3	1¼
3⅝	4	1¼
3⅜	5	1¼
3⅛	6	1
2⅞	7	1
2⅞	8	1
2⅜	10	⅞
2¼	12	⅞
2⅛	14	⅞
2⅛	16	⅞
2	20	⅞
1¾	24	⅞

GENERAL NOTES:
(a) All dimensions are given in inches.
(b) For keyway dimensions, see Table 69.
(c) For tolerances, see Table 73.
(d) To select the cutter number for bevel gears with the axis at any angle, double the back cone radius and multiply by the diametral pitch. This gives the number of teeth in the equivalent spur gear and is the basis for selecting the proper cutter number from Table 23A.

Copyright ASME International
Provided by IHS under license with ASME
No reproduction or networking permitted without license from IHS
Not for Resale

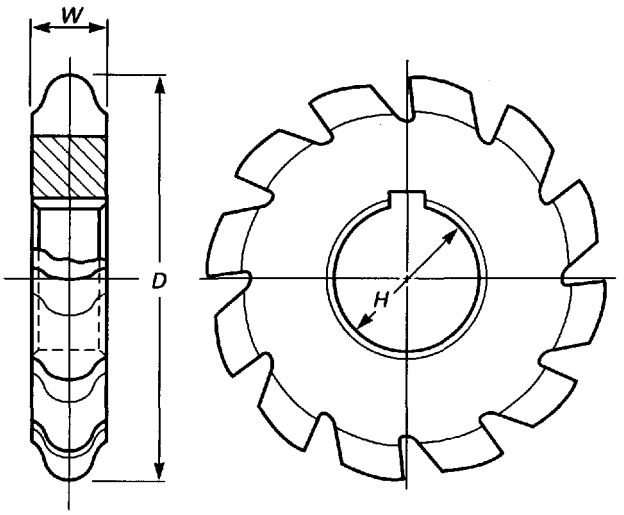

TABLE 25 ROLLER CHAIN SPROCKET MILLING CUTTERS, ASME STANDARD TOOTH FORM,[1] FORM RELIEVED: HIGH-SPEED STEEL

Cutter Dia, *D*	Chain Pitch	Roll Dia	No. of Teeth in Sprocket	Hole Dia, *H*	Cutter Width, *W*
2 3/4	1/4	0.130	6	1	5/16
2 3/4	1/4	0.130	7–8	1	5/16
2 3/4	1/4	0.130	9–11	1	5/16
2 3/4	1/4	0.130	12–17	1	5/16
2 3/4	1/4	0.130	18–34	1	9/32
2 3/4	1/4	0.130	35 and over	1	9/32
2 3/4	3/8	0.200	6	1	15/32
2 3/4	3/8	0.200	7–8	1	15/32
2 3/4	3/8	0.200	9–11	1	15/32
2 3/4	3/8	0.200	12–17	1	7/16
2 3/4	3/8	0.200	18–34	1	7/16
2 3/4	3/8	0.200	35 and over	1	13/32
3	1/2	0.313	6	1	3/4
3	1/2	0.313	7–8	1	3/4
3 1/8	1/2	0.313	9–11	1	3/4
3 1/8	1/2	0.313	12–17	1	3/4
3 1/8	1/2	0.313	18–34	1	23/32
3 1/8	1/2	0.313	35 and over	1	11/16
3 1/8	5/8	0.400	6	1	3/4
3 1/8	5/8	0.400	7–8	1	3/4
3 1/4	5/8	0.400	9–11	1	3/4
3 1/4	5/8	0.400	12–17	1	3/4
3 1/4	5/8	0.400	18–34	1	23/32
3 1/4	5/8	0.400	35 and over	1	11/16
3 1/4	3/4	0.469	6	1	29/32
3 1/4	3/4	0.469	7–8	1	29/32
3 3/8	3/4	0.469	9–11	1	29/32
3 3/8	3/4	0.469	12–17	1	7/8
3 3/8	3/4	0.469	18–34	1	27/32
3 3/8	3/4	0.469	35 and over	1	13/16

Copyright ASME International
Provided by IHS under license with ASME
No reproduction or networking permitted without license from IHS
Not for Resale

TABLE 25 ROLLER CHAIN SPROCKET MILLING CUTTERS, ASME STANDARD TOOTH FORM,[1] FORM RELIEVED: HIGH-SPEED STEEL (CONT'D)

Cutter Dia, *D*	Chain Pitch	Roll Dia	No. of Teeth in Sprocket	Hole Dia, *H*	Cutter Width, *W*
3 7/8	1	0.625	6	1 1/4	1 1/2
4	1	0.625	7–8	1 1/4	1 1/2
4 1/8	1	0.625	9–11	1 1/4	1 15/32
4 1/8	1	0.625	12–17	1 1/4	1 15/32
4 1/4	1	0.625	18–34	1 1/4	1 13/32
4 1/4	1	0.625	35 and over	1 1/4	1 11/32
4 1/4	1 1/4	0.750	6	1 1/4	1 13/16
4 3/8	1 1/4	0.750	7–8	1 1/4	1 13/16
4 1/2	1 1/4	0.750	9–11	1 1/4	1 25/32
4 1/2	1 1/4	0.750	12–17	1 1/4	1 3/4
4 5/8	1 1/4	0.750	18–34	1 1/4	1 11/16
4 5/8	1 1/4	0.750	35 and over	1 1/4	1 5/8
4 3/8	1 1/2	0.875	6	1 1/4	1 13/16
4 1/2	1 1/2	0.875	7–8	1 1/4	1 13/16
4 5/8	1 1/2	0.875	9–11	1 1/4	1 25/32
4 5/8	1 1/2	0.875	12–17	1 1/4	1 3/4
4 3/4	1 1/2	0.875	18–34	1 1/4	1 11/16
4 3/4	1 1/2	0.875	35 and over	1 1/4	1 5/8
5	1 3/4	1.000	6	1 1/2	2 3/32
5 1/8	1 3/4	1.000	7–8	1 1/2	2 3/32
5 1/4	1 3/4	1.000	9–11	1 1/2	2 1/16
5 3/8	1 3/4	1.000	12–17	1 1/2	2 1/32
5 1/2	1 3/4	1.000	18–34	1 1/2	1 31/32
5 1/2	1 3/4	1.000	35 and over	1 1/2	1 7/8
5 3/8	2	1.125	6	1 1/2	2 13/32
5 1/2	2	1.125	7–8	1 1/2	2 13/32
5 5/8	2	1.125	9–11	1 1/2	2 3/8
5 3/4	2	1.125	12–17	1 1/2	2 5/16
5 7/8	2	1.125	18–34	1 1/2	2 1/4
5 7/8	2	1.125	35 and over	1 1/2	2 5/32
5 7/8	2 1/4	1.406	6	1 1/2	2 11/16
6	2 1/4	1.406	7–8	1 1/2	2 11/16
6 1/4	2 1/4	1.406	9–11	1 1/2	2 21/32
6 3/8	2 1/4	1.406	12–17	1 1/2	2 19/32
6 1/2	2 1/4	1.406	18–34	1 1/2	2 15/32
6 1/2	2 1/4	1.406	35 and over	1 1/2	2 13/32
6 3/8	2 1/2	1.563	6	1 3/4	3
6 5/8	2 1/2	1.563	7–8	1 3/4	3
6 3/4	2 1/2	1.563	9–11	1 3/4	2 15/16
6 7/8	2 1/2	1.563	12–17	1 3/4	2 29/32
7	2 1/2	1.563	18–34	1 3/4	2 3/4
7 1/8	2 1/2	1.563	35 and over	1 3/4	2 11/16

Copyright ASME International
Provided by IHS under license with ASME
No reproduction or networking permitted without license from IHS
Not for Resale

TABLE 25 ROLLER CHAIN SPROCKET MILLING CUTTERS, ASME STANDARD TOOTH FORM,[1] FORM RELIEVED: HIGH-SPEED STEEL (CONT'D)

Cutter Dia, *D*	Chain Pitch	Roll Dia	No. of Teeth in Sprocket	Hole Dia, *H*	Cutter Width, *W*
7 1/2	3	1.875	6	2	3 19/32
7 3/4	3	1.875	7–8	2	3 19/32
7 7/8	3	1.875	9–11	2	3 17/32
8	3	1.875	12–17	2	3 15/32
8	3	1.875	18–34	2	3 11/32
8 1/4	3	1.875	35 and over	2	3 7/32

GENERAL NOTES:
(a) All dimensions are given in inches.
(b) For keyway dimensions, see Table 69.
(c) For tolerances, see Table 73.

NOTE:
(1) See ASME B29.1M-1993, Precision Power Transmission Roller Chains, Attachments, and Sprockets.

Copyright ASME International
Provided by IHS under license with ASME
No reproduction or networking permitted without license from IHS
Not for Resale

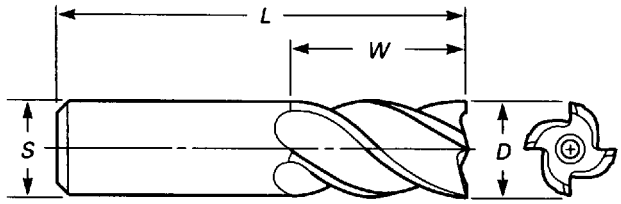

TABLE 26 MULTIPLE-FLUTE, HELICAL SERIES END MILLS, PLAIN STRAIGHT SHANKS: HIGH-SPEED STEEL

Cutter and Shank Dia., *D* and *S*	Overall Length, *L*	Cut Length, *W*
1/8	1 1/4	5/16
3/16	1 3/8	1/2
1/4	1 11/16	5/8
3/8	1 13/16	3/4
1/2	2 1/4	15/16
3/4	2 5/8	1 1/4

GENERAL NOTES:
(a) All dimensions are given in inches.
(b) Outside diameter tolerance is +0.003/–0.000.
(c) For all other tolerances, see Table 74.
(d) Right-hand cutters with right-hand helixes are standard. Helix angle is not less than 10 deg.

Copyright ASME International
Provided by IHS under license with ASME
No reproduction or networking permitted without license from IHS
Not for Resale

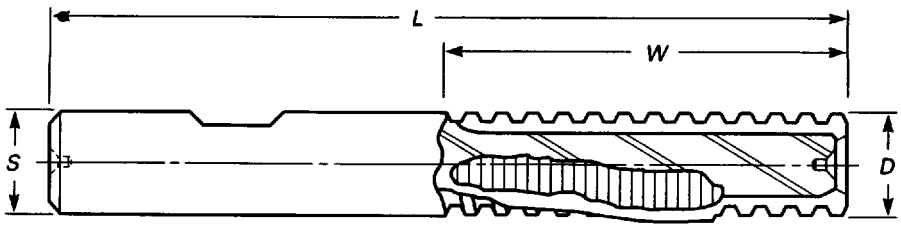

TABLE 27A ROUGHING, SINGLE-END END MILLS WITH WELDON SHANKS: HIGH-SPEED STEEL

Cutter, *D*	Overall Length, *L*	Shank Dia, *S*	Cut Length, *W*	Cutter, *D*	Overall Length, *L*	Shank Dia, *S*	Cut Length, *W*
1/2	3	1/2	1	2	5 3/4	2	2
1/2	3 1/4	1/2	1 1/4	2	6 3/4	2	3
1/2	4	1/2	2	2	7 3/4	2	4
5/8	3 3/8	5/8	1 1/4	2	8 3/4	2	5
5/8	3 3/4	5/8	1 5/8	2	9 3/4	2	6
5/8	4 5/8	5/8	2 1/2	2	10 3/4	2	7
3/4	3 3/4	3/4	1 1/2	2	11 3/4	2	8
3/4	3 7/8	3/4	1 5/8	2	13 3/4	2	10
3/4	5 1/4	3/4	3	2	15 3/4	2	12
1	4 1/2	1	2	2 1/2	7 3/4	2	4
1	6 1/2	1	4	2 1/2	9 3/4	2	6
1 1/4	4 1/2	1 1/4	2	2 1/2	11 3/4	2	8
1 1/4	6 1/2	1 1/4	4	2 1/2	13 3/4	2	10
1 1/2	4 1/2	1 1/4	2	3	7 3/4	2 1/2	4
1 1/2	6 1/2	1 1/4	4	3	9 3/4	2 1/2	6
1 3/4	4 1/2	1 1/4	2	3	11 3/4	2 1/2	8
1 3/4	6 1/2	1 1/4	4	3	13 3/4	2 1/2	10

GENERAL NOTES:
(a) All dimensions are given in inches.
(b) For all other element tolerances, see Table 74.
(c) For shank dimensions, see Table 70A.
(d) Right-hand cutters with right-hand helix are standard.
(e) See Table 27B for tolerances.

Copyright ASME International
Provided by IHS under license with ASME
No reproduction or networking permitted without license from IHS Not for Resale

STD.ASME B94.19-ENGL 1997 ■ 0759670 0589224 238 ■

TABLE 27B TOLERANCES FOR ROUGHING, SINGLE-END END MILLS WITH WELDON SHANKS: HIGH-SPEED STEEL

Element	Tolerance
Outside dia	+0.025/–0.005
Outside dia taper	
Cut length: max front taper	
Up to 4 incl	0.002
Over 4 to 6 incl	0.003
Over 6 to 12 incl	0.004
Cut length: max back taper	
Up to 4 incl	0.005
Over 4 to 6 incl	0.008
Over 6 to 12 incl	0.010
Outside dia form runout [Note (1)]	
Cut length: max runout	
Up to 4 incl	0.005
Over 4 to 12 incl	0.006
Cut length	+1/8/–1/32

GENERAL NOTES:
(a) All dimensions are given in inches.
(b) For all other element tolerances, see Table 74.
(c) For shank dimensions, see Table 70A.

NOTE:
(1) Outside diameter form runout is measured on centers.

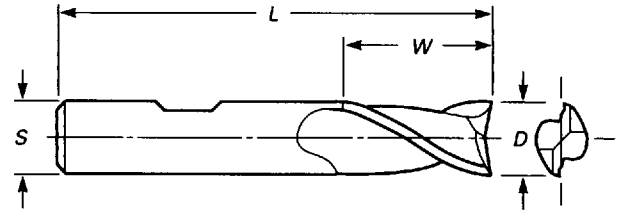

TABLE 28 TWO-FLUTE, SINGLE-END, HELICAL SERIES END MILLS FOR KEYWAY CUTTING WITH WELDON SHANKS: HIGH-SPEED STEEL

Cutter Dia, *D*	Overall Length, *L*	Shank Dia, *S*	Cut Length, *W*
1/8	2 5/16	3/8	3/8
3/16	2 5/16	3/8	7/16
1/4	2 5/16	3/8	1/2
5/16	2 5/16	3/8	9/16
3/8	2 5/16	3/8	9/16
1/2	3	1/2	1
5/8	3 7/16	5/8	1 5/16
3/4	3 9/16	3/4	1 5/16
7/8	3 3/4	7/8	1 1/2
1	4 1/8	1	1 5/8
1 1/4	4 1/8	1 1/4	1 5/8
1 1/2	4 1/8	1 1/4	1 5/8

GENERAL NOTES:
(a) All dimensions are given in inches.
(b) Outside diameter tolerance is +0.0000/–0.0015.
(c) For all other tolerances, see Table 74.
(d) For shank dimensions, see Table 70A.
(e) Right-hand cutters with right-hand helixes are standard. Helix angle is optional with manufacturer.

Copyright ASME International
Provided by IHS under license with ASME
No reproduction or networking permitted without license from IHS
Not for Resale

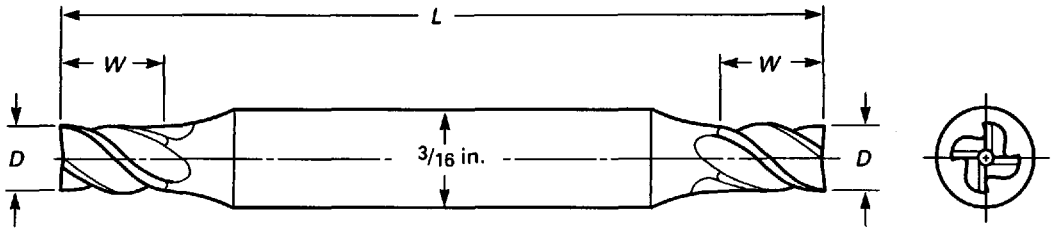

TABLE 29 STUB LENGTH, FOUR-FLUTE, MEDIUM HELIX, DOUBLE-END MINIATURE END MILLS WITH 3/16 in. DIAMETER STRAIGHT SHANKS: HIGH-SPEED STEEL

Cutter Dia., *D*	Overall Length, *L*	Cut Length, *W*
1/16	2	3/32
3/32	2	9/64
1/8	2	3/16
5/32	2	15/64
3/16	2	9/32

GENERAL NOTES:
(a) All dimensions are given in inches.
(b) For tolerances, see Table 74.
(c) Right-hand cutters with right-hand helixes are standard. Helix angle is greater than 19 deg, but not more than 39 deg.

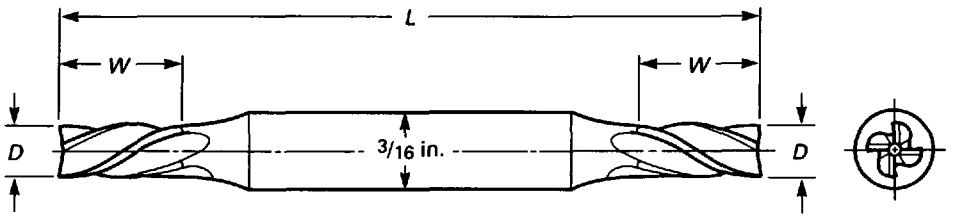

TABLE 30 REGULAR LENGTH, FOUR-FLUTE, MEDIUM HELIX, DOUBLE-END MINIATURE END MILLS WITH 3/16 in. DIAMETER STRAIGHT SHANKS: HIGH-SPEED STEEL

Cutter Dia., *D*	Overall Length, *L*	Cut Length, *W*
1/16	2 1/4	3/16
3/32	2 1/4	9/32
1/8	2 1/4	3/8
5/32	2 1/4	7/16
3/16	2 1/4	1/2

GENERAL NOTES:
(a) All dimensions are given in inches.
(b) For tolerances, see Table 74.
(c) Right-hand cutters with right-hand helixes are standard. Helix angle is greater than 19 deg, but not more than 39 deg.

Copyright ASME International
Provided by IHS under license with ASME
No reproduction or networking permitted without license from IHS
Not for Resale

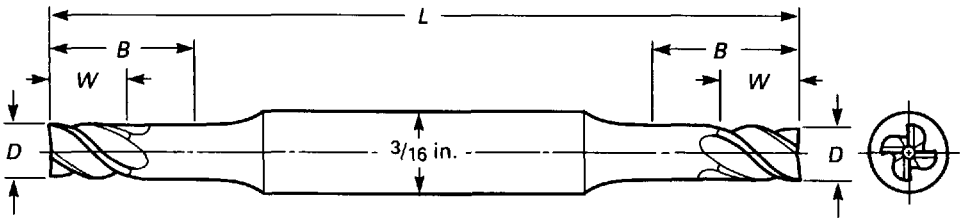

TABLE 31 LONG LENGTH, FOUR-FLUTE, MEDIUM HELIX, DOUBLE-END MINIATURE END MILLS WITH 3/16 in. DIAMETER STRAIGHT SHANKS: HIGH-SPEED STEEL

Cutter Dia., *D*	Length Below Shank, *B*	Overall Length, *L*	Cut Length, *W*
1/16	3/8	2 1/2	7/32
3/32	1/2	2 5/8	9/32
1/8	3/4	3 1/8	3/4
5/32	7/8	3 1/4	7/8
3/16	1	3 3/8	1

GENERAL NOTES:
(a) All dimensions are given in inches.
(b) For tolerances, see Table 74.
(c) Right-hand cutters with right-hand helixes are standard. Helix angle is greater than 19 deg, but not more than 39 deg.

Copyright ASME International
Provided by IHS under license with ASME
No reproduction or networking permitted without license from IHS
Not for Resale

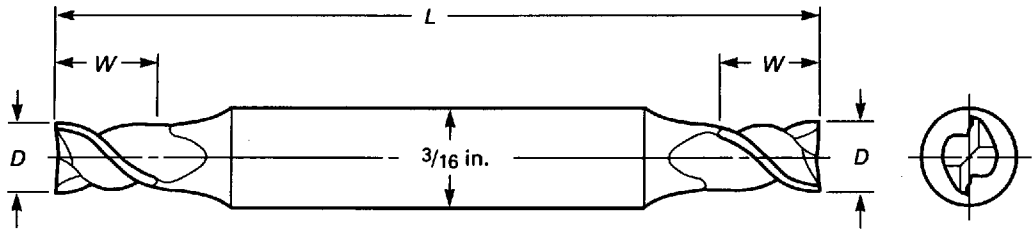

TABLE 32 STUB LENGTH, TWO-FLUTE, MEDIUM HELIX, DOUBLE-END MINIATURE END MILLS WITH 3/16 in. DIAMETER STRAIGHT SHANKS: HIGH-SPEED STEEL

Cutter Dia., *D*	Overall Length, *L*	Cut Length, *W*
1/32	2	3/64
3/64	2	1/16
1/16	2	3/32
5/64	2	1/8
3/32	2	9/64
7/64	2	5/32
1/8	2	3/16
9/64	2	7/32
5/32	2	15/64
11/64	2	1/4
3/16	2	9/32

GENERAL NOTES:
(a) All dimensions are given in inches.
(b) For tolerances, see Table 74.
(c) Right-hand cutters with right-hand helixes are standard. Helix angle is greater than 19 deg, but not more than 39 deg.

Copyright ASME International
Provided by IHS under license with ASME
No reproduction or networking permitted without license from IHS
Not for Resale

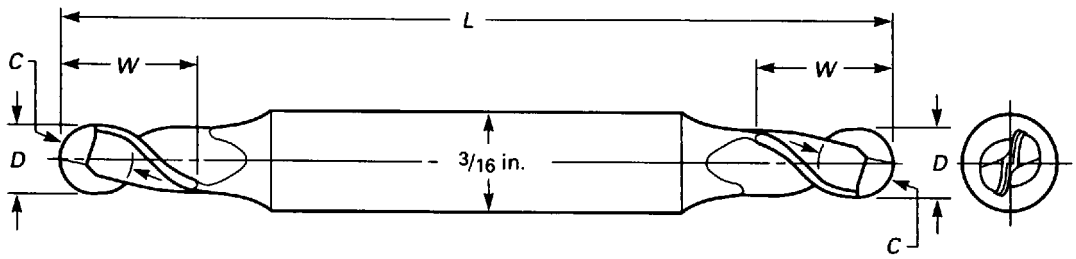

TABLE 33 STUB LENGTH, TWO-FLUTE, MEDIUM HELIX, BALL END, DOUBLE-END MINIATURE END MILLS WITH 3/16 in. DIAMETER STRAIGHT SHANKS: HIGH-SPEED STEEL

Cutter and End Circle Dia, *D* and *C*	Overall Length, *L*	Cut Length, *W*
1/16	2	3/32
3/32	2	9/64
1/8	2	3/16
5/32	2	15/64
3/16	2	9/32

GENERAL NOTES:
(a) All dimensions are given in inches.
(b) For tolerances, see Table 74.
(c) Right-hand cutters with right-hand helixes are standard. Helix angle is greater than 19 deg, but not more than 39 deg.

Copyright ASME International
Provided by IHS under license with ASME
No reproduction or networking permitted without license from IHS
Not for Resale

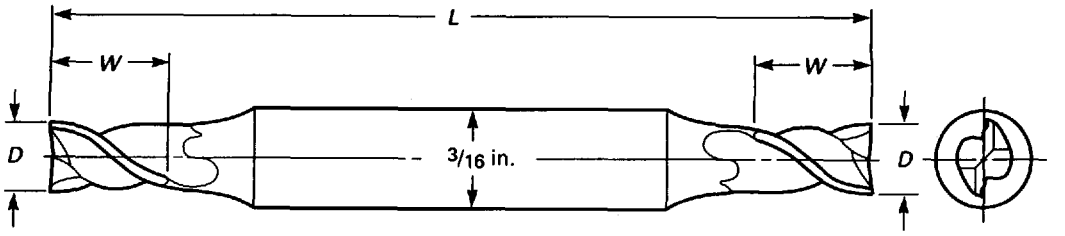

TABLE 34 REGULAR LENGTH, TWO-FLUTE, MEDIUM HELIX, DOUBLE-END MINIATURE END MILLS WITH 3/16 in. DIAMETER STRAIGHT SHANKS: HIGH-SPEED STEEL

Cutter Dia., *D*	Overall Length, *L*	Cut Length, *W*
1/32	2 1/4	3/32
3/64	2 1/4	9/64
1/16	2 1/4	3/16
5/64	2 1/4	15/64
3/32	2 1/4	9/32
7/64	2 1/4	21/64
1/8	2 1/4	3/8
9/64	2 1/4	13/32
5/32	2 1/4	7/16
11/64	2 1/4	1/2
3/16	2 1/4	1/2

GENERAL NOTES:
(a) All dimensions are given in inches.
(b) For tolerances, see Table 74.
(c) Right-hand cutters with right-hand helixes are standard. Helix angle is greater than 19 deg, but not more than 39 deg.

Copyright ASME International
Provided by IHS under license with ASME
No reproduction or networking permitted without license from IHS
Not for Resale

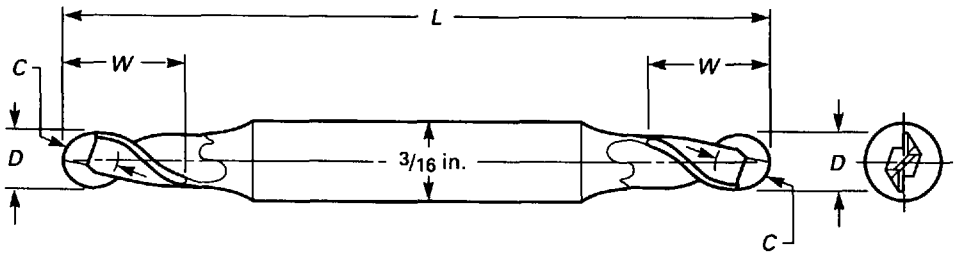

TABLE 35 REGULAR LENGTH, TWO-FLUTE, MEDIUM HELIX, BALL END, DOUBLE-END MINIATURE END MILLS WITH 3/16 in. DIAMETER STRAIGHT SHANKS: HIGH-SPEED STEEL

Cutter and End Circle Dia, *D* and *C*	Overall Length, *L*	Cut Length, *W*
1/16	2 1/4	3/16
3/32	2 1/4	9/32
1/8	2 1/4	3/8
5/32	2 1/4	7/16
3/16	2 1/4	1/2

GENERAL NOTES:
(a) All dimensions are given in inches.
(b) For tolerances, see Table 74.
(c) Right-hand cutters with right-hand helixes are standard. Helix angle is greater than 19 deg, but not more than 39 deg.

Copyright ASME International
Provided by IHS under license with ASME
No reproduction or networking permitted without license from IHS
Not for Resale

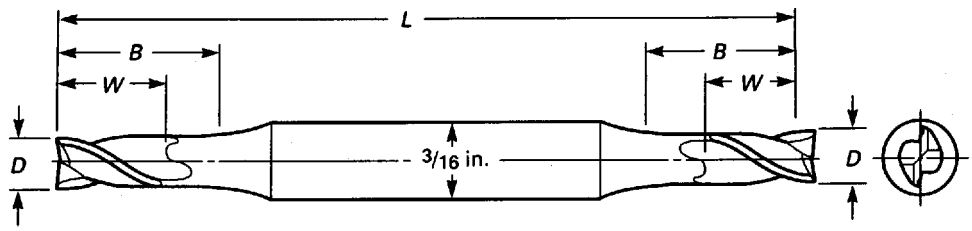

TABLE 36 LONG LENGTH, TWO-FLUTE, MEDIUM HELIX DOUBLE-END MINIATURE END MILLS WITH 3/16 in. DIAMETER STRAIGHT SHANKS: HIGH-SPEED STEEL

Cutter Dia., *D*	Length Below Shank, *B*	Overall Length, *L*	Cut Length, *W*
1/16	3/8	2 1/2	7/32
3/32	1/2	2 5/8	9/32
1/8	3/4	3 1/8	3/4
5/32	7/8	3 1/4	7/8
3/16	1	3 3/8	1

GENERAL NOTES:
(a) All dimensions are given in inches.
(b) For tolerances, see Table 74.
(c) Right-hand cutters with right-hand helixes are standard. Helix angle is greater than 19 deg, but not more than 39 deg.

Copyright ASME International
Provided by IHS under license with ASME
No reproduction or networking permitted without license from IHS
Not for Resale

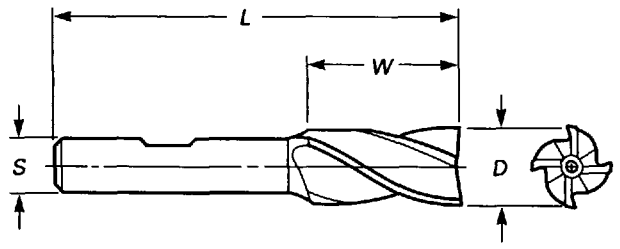

TABLE 37 REGULAR LENGTH, MULTIPLE-FLUTE, MEDIUM HELIX, SINGLE-END END MILLS WITH WELDON SHANKS: HIGH-SPEED STEEL

Cutter Dia, *D*	No. of Flutes	Overall Length, *L*	Shank Dia, *S*	Cut Length, *W*
1/8 *	4	2 5/16	3/8	3/8
3/16*	4	2 3/8	3/8	1/2
1/4 •	4	2 7/16	3/8	5/8
5/16*	4	2 1/2	3/8	3/4
3/8 *	4	2 1/2	3/8	3/4
7/16	4	2 11/16	3/8	1
1/2	4	2 11/16	3/8	1
1/2 •	4	3 1/4	1/2	1 1/4
9/16	4	3 3/8	1/2	1 3/8
5/8	4	3 3/8	1/2	1 3/8
11/16	4	3 5/8	1/2	1 5/8
3/4	4	3 5/8	1/2	1 5/8
5/8 *	4	3 3/4	5/8	1 5/8
11/16	4	3 3/4	5/8	1 5/8
3/4 *	4	3 3/4	5/8	1 5/8
13/16	6	4	5/8	1 7/8
7/8	6	4	5/8	1 7/8
1	6	4	5/8	1 7/8
7/8	4	4 1/8	7/8	1 7/8
1	4	4 1/8	7/8	1 7/8
1 1/8	6	4 1/4	7/8	2
1 1/4	6	4 1/4	7/8	2
1	4	4 1/2	1	2
1 1/8	6	4 1/2	1	2
1 1/4	6	4 1/2	1	2
1 3/8	6	4 1/2	1	2
1 1/2	6	4 1/2	1	2
1 1/4	6	4 1/2	1 1/4	2
1 1/2	6	4 1/2	1 1/4	2
1 3/4	6	4 1/2	1 1/4	2
2	8	4 1/2	1 1/4	2

GENERAL NOTES:
(a) All dimensions are given in inches.
(b) For tolerances, see Table 74.
(c) For shank dimensions, see Table 70A.
(d) Right-hand cutters with right-hand helixes are standard. Sizes with asterisks (*) are also standard with left-hand cut, left-hand helix. Helix angle is greater than 19 deg, but not more than 39 deg.

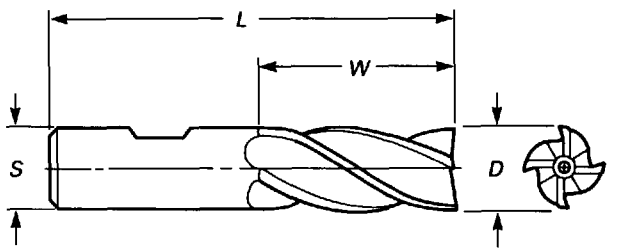

TABLE 38 LONG LENGTH, MULTIPLE-FLUTE, MEDIUM HELIX, SINGLE-END END MILLS WITH WELDON SHANKS: HIGH-SPEED STEEL

Cutter Dia, *D*	No. of Flutes	Overall Length, *L*	Shank Dia, *S*	Cut Length, *W*
1/4	4	3 1/16	3/8	1 1/4
5/16	4	3 1/8	3/8	1 3/8
3/8	4	3 1/4	3/8	1 1/2
7/16	4	3 3/4	1/2	1 3/4
1/2	4	4	1/2	2
5/8	4	4 5/8	5/8	2 1/2
3/4	4	5 1/4	3/4	3
7/8	4	5 3/4	7/8	3 1/2
1	4	6 1/2	1	4
1 1/8	6	6 1/2	1	4
1 1/4	6	6 1/2	1	4
1 1/2	6	6 1/2	1	4
1 1/4	6	6 1/2	1 1/4	4
1 1/2	6	6 1/2	1 1/4	4
1 3/4	6	6 1/2	1 1/4	4
2	8	6 1/2	1 1/4	4

GENERAL NOTES:
(a) All dimensions are given in inches.
(b) For tolerances, see Table 74.
(c) For shank dimensions, see Table 70A.
(d) Right-hand cutters with right-hand helixes are standard. Helix angle is greater than 19 deg, but not more than 39 deg.

Copyright ASME International
Provided by IHS under license with ASME
No reproduction or networking permitted without license from IHS
Not for Resale

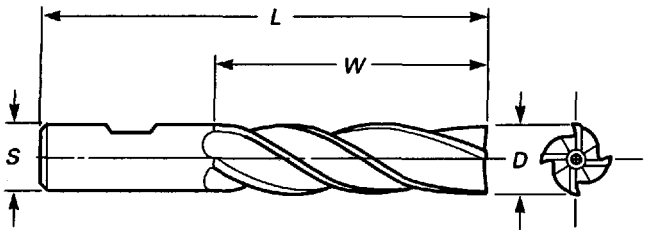

TABLE 39 EXTRA LONG LENGTH, MULTIPLE-FLUTE, MEDIUM HELIX, SINGLE-END END MILLS WITH WELDON SHANKS: HIGH-SPEED STEEL

Cutter Dia., *D*	No. of Flutes	Overall Length, *L*	Shank Dia., *S*	Cut Length, *W*
1/4	4	3 9/16	3/8	1 3/4
5/16	4	3 3/4	3/8	2
3/8	4	4 1/4	3/8	2 1/2
1/2	4	5	1/2	3
5/8	4	6 1/8	5/8	4
3/4	4	6 1/4	3/4	4
7/8	4	7 1/4	7/8	5
1	4	8 1/2	1	6
1 1/4	6	8 1/2	1 1/4	6
1 1/2	6	10 1/2	1 1/4	8

GENERAL NOTES:
(a) All dimensions are given in inches.
(b) For tolerances, see Table 74.
(c) For shank dimensions, see Table 70A.
(d) Right-hand cutters with right-hand helixes are standard. Helix angle is greater than 19 deg, but not more than 39 deg.

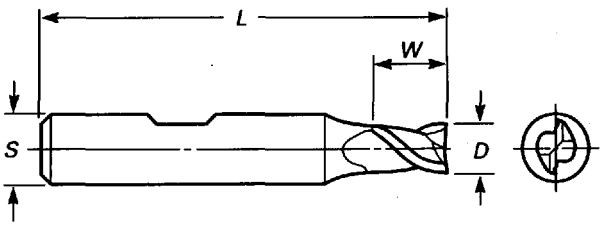

TABLE 40 STUB LENGTH, TWO-FLUTE, MEDIUM HELIX, SINGLE-END END MILLS WITH WELDON SHANKS: HIGH-SPEED STEEL

Cutter Dia., *D*	Overall Length, *L*	Shank Dia., *S*	Cut Length, *W*
1/8	2 1/8	3/8	3/16
3/16	2 3/16	3/8	9/32
1/4	2 1/4	3/8	3/8

GENERAL NOTES:
(a) All dimensions are given in inches.
(b) For tolerances, see Table 74.
(c) For shank dimensions, see Table 70A.
(d) Right-hand cutters with right-hand helixes are standard. Helix angle is greater than 19 deg, but not more than 39 deg.

Copyright ASME International
Provided by IHS under license with ASME
No reproduction or networking permitted without license from IHS
Not for Resale

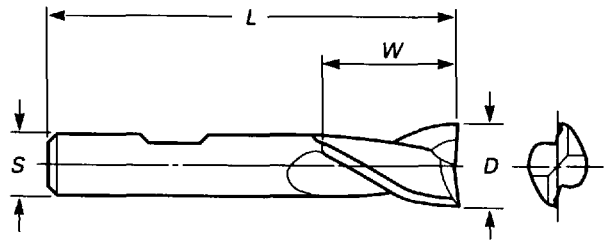

TABLE 41 REGULAR LENGTH, TWO-FLUTE, MEDIUM HELIX, SINGLE-END END MILLS WITH WELDON SHANKS: HIGH-SPEED STEEL

Cutter Dia, *D*	Overall Length, *L*	Shank Dia, *S*	Cut Length, *W*
1/8	2 5/16	3/8	3/8
3/16	2 3/8	3/8	7/16
1/4	2 7/16	3/8	1/2
5/16	2 1/2	3/8	9/16
3/8	2 1/2	3/8	9/16
7/16	2 11/16	3/8	13/16
1/2	2 11/16	3/8	13/16
1/2	3 1/4	1/2	1
9/16	3 3/8	1/2	1 1/8
5/8	3 3/8	1/2	1 1/8
11/16	3 5/8	1/2	1 5/16
3/4	3 5/8	1/2	1 5/16
5/8	3 3/4	5/8	1 5/16
11/16	3 3/4	5/8	1 5/16
3/4	3 3/4	5/8	1 5/16
13/16	4	5/8	1 1/2
7/8	4	5/8	1 1/2
1	4	5/8	1 1/2
7/8	4 1/8	7/8	1 1/2
1	4 1/8	7/8	1 1/2
1 1/8	4 1/4	7/8	1 5/8
1 1/4	4 1/4	7/8	1 5/8
1	4 1/2	1	1 5/8
1 1/8	4 1/2	1	1 5/8
1 1/4	4 1/2	1	1 5/8
1 3/8	4 1/2	1	1 5/8
1 1/2	4 1/2	1	1 5/8
1 1/4	4 1/2	1 1/4	1 5/8
1 1/2	4 1/2	1 1/4	1 5/8
1 3/4	4 1/2	1 1/4	1 5/8
2	4 1/2	1 1/4	1 5/8

GENERAL NOTES:
(a) All dimensions are given in inches.
(b) For tolerances, see Table 74.
(c) For shank dimensions, see Table 70A.
(d) Right-hand cutters with right-hand helixes are standard. Helix angle is greater than 19 deg, but not more than 39 deg.

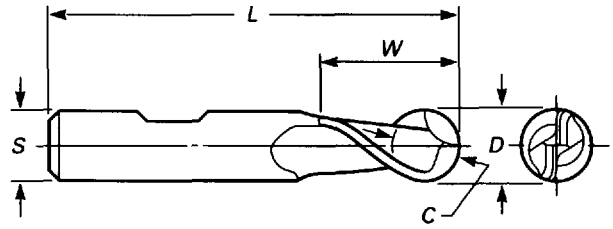

TABLE 42 REGULAR LENGTH, TWO-FLUTE, MEDIUM HELIX, BALL END, SINGLE-END END MILLS WITH WELDON SHANKS: HIGH-SPEED STEEL

Cutter and End Circle Dia, *D* and *C*	Overall Length, *L*	Shank Dia, *S*	Cut Length, *W*
1/8	2 5/16	3/8	3/8
3/16	2 3/8	3/8	1/2
1/4	2 7/16	3/8	5/8
5/16	2 1/2	3/8	3/4
3/8	2 1/2	3/8	3/4
7/16	3	1/2	1
1/2	3	1/2	1
9/16	3 1/8	1/2	1 1/8
5/8	3 1/8	1/2	1 1/8
5/8	3 1/2	5/8	1 3/8
3/4	3 5/16	1/2	1 5/16
3/4	3 7/8	3/4	1 5/8
7/8	4 1/4	7/8	2
1	4 3/4	1	2 1/4
1 1/8	4 3/4	1	2 1/4
1 1/4	5	1 1/4	2 1/2
1 1/2	5	1 1/4	2 1/2

GENERAL NOTES:
(a) All dimensions are given in inches.
(b) For tolerances, see Table 74.
(c) For shank dimensions, see Table 70A.
(d) Right-hand cutters with right-hand helixes are standard. Helix angle is greater than 19 deg, but not more than 39 deg.

Copyright ASME International
Provided by IHS under license with ASME
No reproduction or networking permitted without license from IHS
Not for Resale

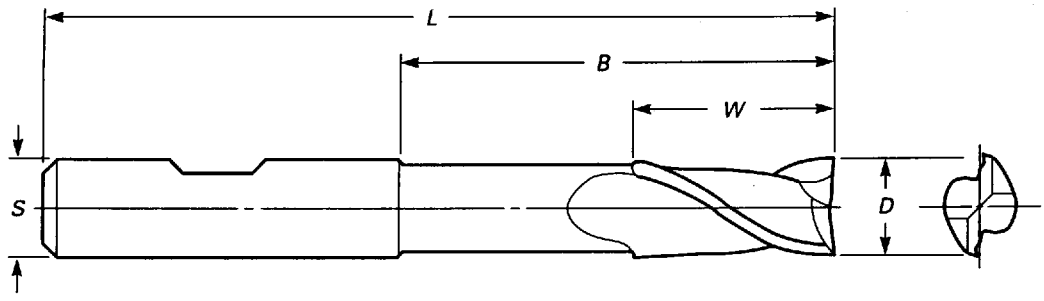

TABLE 43 LONG LENGTH, TWO-FLUTE, MEDIUM HELIX, SINGLE-END END MILLS WITH WELDON SHANKS: HIGH-SPEED STEEL

Cutter Dia, *D*	Length Below Shank, *B*	Overall Length, *L*	Shank Dia, *S*	Cut Length, *W*
1/4	1 1/2	3 1/16	3/8	5/8
5/16	1 9/16	3 1/8	3/8	3/4
3/8	1 11/16	3 1/4	3/8	3/4
1/2	2 7/32	4	1/2	1
5/8	2 23/32	4 5/8	5/8	1 3/8
3/4	3 7/32	5 1/4	3/4	1 5/8
1	4 31/32	7 1/4	1	2 1/2
1 1/4	4 31/32	7 1/4	1 1/4	3

GENERAL NOTES:
(a) All dimensions are given in inches.
(b) For tolerances, see Table 74.
(c) For shank dimensions, see Table 70A.
(d) Right-hand cutters with right-hand helixes are standard. Helix angle is greater than 19 deg, but not more than 39 deg.

Copyright ASME International
Provided by IHS under license with ASME
No reproduction or networking permitted without license from IHS
Not for Resale

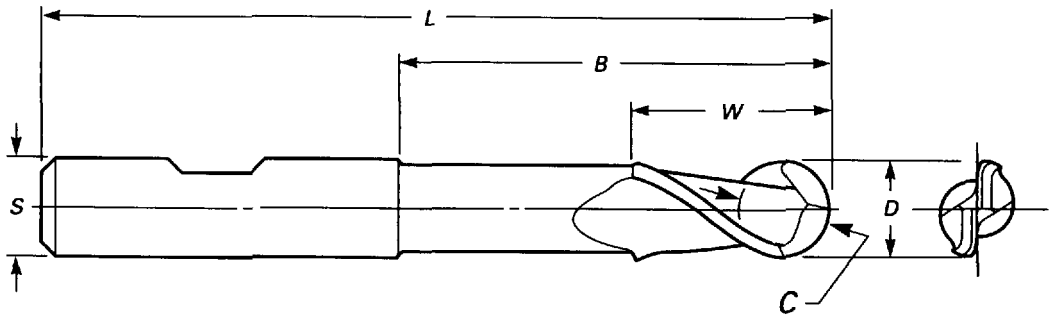

TABLE 44 LONG LENGTH, TWO-FLUTE, MEDIUM HELIX, BALL END, SINGLE-END END MILLS WITH WELDON SHANKS: HIGH-SPEED STEEL

Cutter and End Circle Dia, *D* and *C*	Length Below Shank, *B*	Overall Length, *L*	Shank Dia, *S*	Cut Length, *W*
1/8	13/16	2 3/8	3/8	3/8
3/16	1 1/8	2 11/16	3/8	1/2
1/4	1 1/2	3 1/16	3/8	5/8
5/16	1 9/16	3 1/8	3/8	3/4
3/8	1 11/16	3 1/4	3/8	3/4
7/16	1 15/16	3 3/4	1/2	1
1/2	2 1/4	4	1/2	1
5/8	2 3/4	4 5/8	5/8	1 3/8
3/4	3 1/4	5 1/4	3/4	1 5/8
1	5	7 1/4	1	2 1/2

GENERAL NOTES:
(a) All dimensions are given in inches.
(b) For tolerances, see Table 74.
(c) For shank dimensions, see Table 70A.
(d) Right-hand cutters with right-hand helixes are standard. Helix angle is greater than 19 deg, but not more than 39 deg.

Copyright ASME International
Provided by IHS under license with ASME
No reproduction or networking permitted without license from IHS Not for Resale

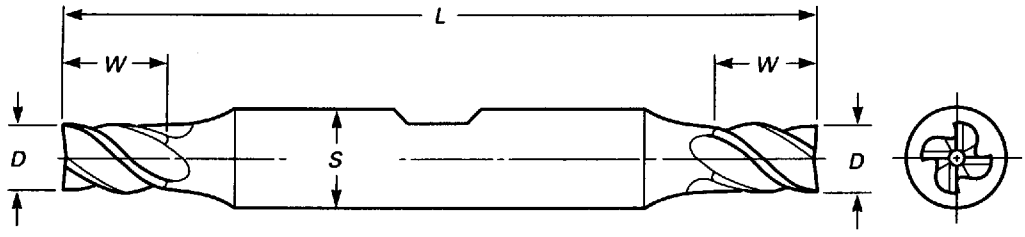

TABLE 45 STUB LENGTH, FOUR-FLUTE, MEDIUM HELIX, DOUBLE-END END MILLS WITH WELDON SHANKS: HIGH-SPEED STEEL

Cutter Dia., *D*	Overall Length, *L*	Shank Dia., *S*	Cut Length, *W*
1/8	2 3/4	3/8	3/16
5/32	2 3/4	3/8	15/64
3/16	2 3/4	3/8	9/32
7/32	2 7/8	3/8	21/64
1/4	2 7/8	3/8	3/8

GENERAL NOTES:
(a) All dimensions are given in inches.
(b) For tolerances, see Table 74.
(c) For shank dimensions, see Table 70A.
(d) Right-hand cutters with right-hand helixes are standard. Helix angle is greater than 19 deg, but not more than 39 deg.

Copyright ASME International
Provided by IHS under license with ASME
No reproduction or networking permitted without license from IHS
Not for Resale

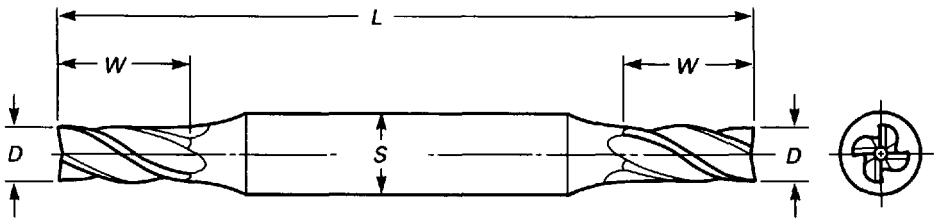

TABLE 46 REGULAR LENGTH, FOUR-FLUTE, MEDIUM HELIX, DOUBLE-END END MILLS WITH WELDON SHANKS: HIGH-SPEED STEEL

Cutter Dia., *D*	Overall Length, *L*	Shank Dia., *S*	Cut Length, *W*
1/8 *	3 1/16	3/8	3/8
5/32*	3 1/8	3/8	7/16
3/16*	3 1/4	3/8	1/2
7/32	3 1/4	3/8	9/16
1/4 *	3 3/8	3/8	5/8
9/32	3 3/8	3/8	11/16
5/16*	3 1/2	3/8	3/4
11/32	3 1/2	3/8*	3/4
3/8 *	3 1/2	3/8	3/4
13/32	4 1/8	1/2	1
7/16	4 1/8	1/2	1
15/32	4 1/8	1/2	1
1/2 *	4 1/8	1/2	1
9/16	5	5/8	1 3/8
5/8 •	5	5/8	1 3/8
11/16	5 5/8	3/4	1 5/8
3/4 •	5 5/8	3/4	1 5/8
13/16	6 1/8	7/8	1 7/8
7/8	6 1/8	7/8	1 7/8
1	6 3/8	1	1 7/8

GENERAL NOTES:
(a) All dimensions are given in inches.
(b) For tolerances, see Table 74.
(c) For shank dimensions, see Table 70A.
(d) Right-hand cutters with right-hand helixes are standard. Sizes with asterisks are also standard with left-hand cut, left-hand helix. Helix angle is greater than 19 deg, but not more than 39 deg.

Copyright ASME International
Provided by IHS under license with ASME
No reproduction or networking permitted without license from IHS
Not for Resale

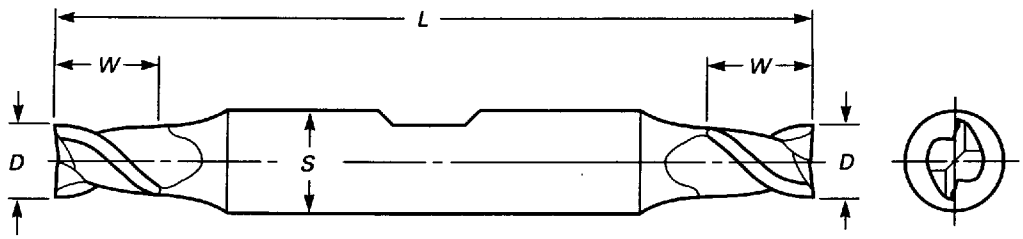

TABLE 47 STUB LENGTH, TWO-FLUTE, MEDIUM HELIX, DOUBLE-END END MILLS WITH WELDON SHANKS: HIGH-SPEED STEEL

Cutter Dia., *D*	Overall Length, *L*	Shank Dia., *S*	Cut Length, *W*
1/8	2 3/4	3/8	3/16
5/32	2 3/4	3/8	15/64
3/16	2 3/4	3/8	9/32
7/32	2 7/8	3/8	21/64
1/4	2 7/8	3/8	3/8

GENERAL NOTES:
(a) All dimensions are given in inches.
(b) For tolerances, see Table 74.
(c) For shank dimensions, see Table 70A.
(d) Right-hand cutters with right-hand helixes are standard. Helix angle is greater than 19 deg, but not more than 39 deg.

Copyright ASME International
Provided by IHS under license with ASME
No reproduction or networking permitted without license from IHS
Not for Resale

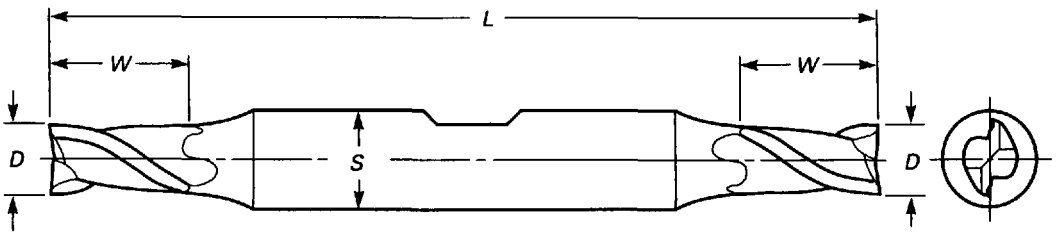

TABLE 48 REGULAR LENGTH, TWO-FLUTE, MEDIUM HELIX, DOUBLE-END END MILLS WITH WELDON SHANKS: HIGH-SPEED STEEL

Cutter Dia., *D*	Overall Length, *L*	Shank Dia., *S*	Cut Length, *W*
1/8	3 1/16	3/8	3/8
5/32	3 1/8	3/8	7/16
3/16	3 1/4	3/8	7/16
7/32	3 1/4	3/8	1/2
1/4	3 3/8	3/8	1/2
9/32	3 3/8	3/8	9/16
5/16	3 1/2	3/8	9/16
11/32	3 1/2	3/8	9/16
3/8	3 1/2	3/8	9/16
13/32	4 1/8	1/2	13/16
7/16	4 1/8	1/2	13/16
15/32	4 1/8	1/2	13/16
1/2	4 1/8	1/2	13/16
9/16	5	5/8	1 1/8
5/8	5	5/8	1 1/8
11/16	5 5/8	3/4	1 5/16
3/4	5 5/8	3/4	1 5/16
7/8	6 1/8	7/8	1 9/16
1	6 3/8	1	1 5/8

GENERAL NOTES:
(a) All dimensions are given in inches.
(b) For tolerances, see Table 74.
(c) For shank dimensions, see Table 70A.
(d) Right-hand cutters with right-hand helixes are standard. Helix angle is greater than 19 deg, but not more than 39 deg.

Copyright ASME International
Provided by IHS under license with ASME
No reproduction or networking permitted without license from IHS
Not for Resale

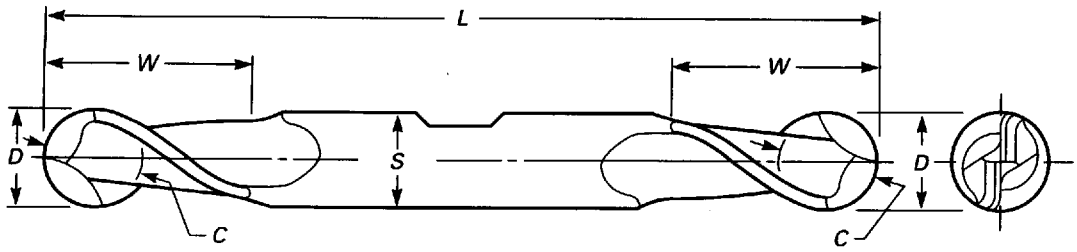

TABLE 49 REGULAR LENGTH, TWO-FLUTE, MEDIUM HELIX, BALL END, DOUBLE-END END MILLS WITH WELDON SHANKS: HIGH-SPEED STEEL

Cutter and End Circle Dia, *D* and *C*	Overall Length, *L*	Shank Dia, *S*	Cut Length, *W*
1/8	3 1/16	3/8	3/8
3/16	3 1/4	3/8	7/16
1/4	3 3/8	3/8	1/2
5/16	3 1/2	3/8	9/16
3/8	3 1/2	3/8	9/16
7/16	4 1/8	1/2	13/16
1/2	4 1/8	1/2	13/16
5/8	5	5/8	1 1/8
3/4	5 5/8	3/4	1 5/16
1	6 3/8	1	1 5/8

GENERAL NOTES:
(a) All dimensions are given in inches.
(b) For tolerances, see Table 74.
(c) For shank dimensions, see Table 70A.
(d) Right-hand cutters with right-hand helixes are standard. Helix angle is greater than 19 deg, but not more than 39 deg.

Copyright ASME International
Provided by IHS under license with ASME
No reproduction or networking permitted without license from IHS
Not for Resale

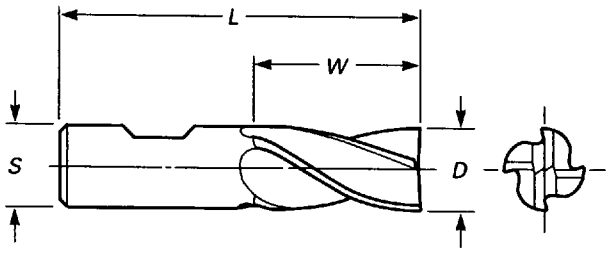

TABLE 50 REGULAR LENGTH, FOUR-FLUTE, MEDIUM HELIX, CENTER CUTTING, SINGLE-END END MILLS WITH WELDON SHANKS: HIGH-SPEED STEEL

Cutter Dia., *D*	Overall Length, *L*	Shank Dia., *S*	Cut Length, *W*
1/8	2 5/16	3/8	3/8
3/16	2 3/8	3/8	1/2
1/4	2 7/16	3/8	5/8
5/16	2 1/2	3/8	3/4
3/8	2 1/2	3/8	3/4
3/8	2 1/2	3/8	3/4
1/2	3 1/4	1/2	1 1/4
5/8	3 3/4	5/8	1 5/8
11/16	3 3/4	5/8	1 5/8
3/4	3 7/8	3/4	1 5/8
7/8	4 1/8	7/8	1 7/8
1	4 1/2	1	2
1 1/8	4 1/2	1	2
1 1/4	4 1/2	1 1/4	2
1 1/2	4 1/2	1 1/4	2

GENERAL NOTES:
(a) All dimensions are given in inches.
(b) For tolerances, see Table 74.
(c) For shank dimensions, see Table 70A.
(d) Right-hand cutters with right-hand helixes are standard. Helix angle is greater than 19 deg, but not more than 39 deg.

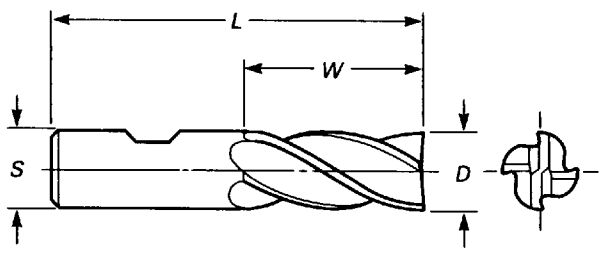

TABLE 51 LONG LENGTH, FOUR-FLUTE, MEDIUM HELIX, CENTER CUTTING, SINGLE-END END MILLS WITH WELDON SHANKS: HIGH-SPEED STEEL

Cutter Dia., *D*	Overall Length, *L*	Shank Dia., *S*	Cut Length, *W*
1/4	3 1/16	3/8	1 1/4
5/16	3 1/8	3/8	1 3/8
3/8	3 1/4	3/8	1 1/2
1/2	4	1/2	2
5/8	4 5/8	5/8	2 1/2
3/4	5 1/4	3/4	3
7/8	5 3/4	7/8	3 1/2
1	6 1/2	1	4
1 1/4	6 1/2	1 1/4	4

GENERAL NOTES:
(a) All dimensions are given in inches.
(b) For tolerances, see Table 74.
(c) For shank dimensions, see Table 70A.
(d) Right-hand cutters with right-hand helixes are standard. Helix angle is greater than 19 deg, but not more than 39 deg.

Copyright ASME International
Provided by IHS under license with ASME
No reproduction or networking permitted without license from IHS
Not for Resale

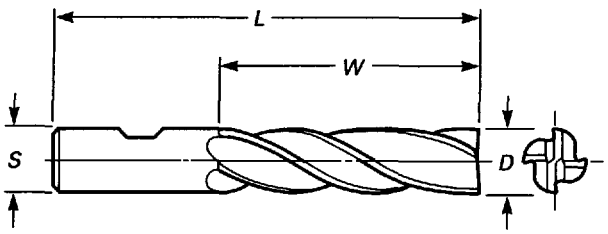

TABLE 52 EXTRA LONG LENGTH, FOUR-FLUTE, MEDIUM HELIX, CENTER CUTTING, SINGLE-END END MILLS WITH WELDON SHANKS: HIGH-SPEED STEEL

Cutter Dia., *D*	Overall Length, *L*	Shank Dia., *S*	Cut Length, *W*
1/4	3 9/16	3/8	1 3/4
5/16	3 3/4	3/8	2
3/8	4 1/4	3/8	2 1/2
1/2	5	1/2	3
5/8	6 1/8	5/8	4
3/4	6 1/4	3/4	4
7/8	7 1/4	7/8	5
1	8 1/2	1	6
1 1/4	8 1/2	1 1/4	6

GENERAL NOTES:
(a) All dimensions are given in inches.
(b) For tolerances, see Table 74.
(c) For shank dimensions, see Table 70A.
(d) Right-hand cutters with right-hand helixes are standard. Helix angle is greater than 19 deg, but not more than 39 deg.

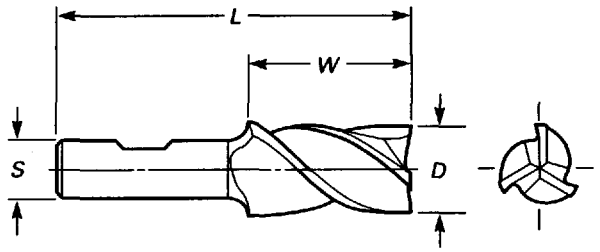

TABLE 53 REGULAR LENGTH, THREE-FLUTE, MEDIUM HELIX, CENTER CUTTING, SINGLE-END END MILLS WITH WELDON SHANKS: HIGH-SPEED STEEL

Cutter Dia., *D*	Overall Length, *L*	Shank Dia., *S*	Cut Length, *W*
1/8	2 5/16	3/8	3/8
3/16	2 3/8	3/8	1/2
1/4	2 7/16	3/8	5/8
5/16	2 1/2	3/8	3/4
3/8	2 1/2	3/8	3/4
7/16	2 11/16	3/8	1
1/2	2 11/16	3/8	1
1/2	3 1/4	1/2	1 1/4
9/16	3 3/8	1/2	1 3/8
5/8	3 3/8	1/2	1 3/8
3/4	3 5/8	1/2	1 5/8
5/8	3 3/4	5/8	1 5/8
3/4	3 3/4	5/8	1 5/8
7/8	4	5/8	1 7/8
1	4	5/8	1 7/8
3/4	3 7/8	3/4	1 5/8
7/8	4 1/8	3/4	1 7/8
1	4 1/8	3/4	1 7/8
1	4 1/8	7/8	1 7/8
1	4 1/2	1	2
1 1/8	4 1/2	1	2
1 1/4	4 1/2	1	2
1 1/2	4 1/2	1	2
1 1/4	4 1/2	1 1/4	2
1 1/2	4 1/2	1 1/4	2
1 3/4	4 1/2	1 1/4	2
2	4 1/2	1 1/4	2

GENERAL NOTES:
(a) All dimensions are given in inches.
(b) For tolerances, see Table 74.
(c) For shank dimensions, see Table 70A.
(d) Right-hand cutters with right-hand helixes are standard. Helix angle is greater than 19 deg, but not more than 39 deg.

Copyright ASME International
Provided by IHS under license with ASME
No reproduction or networking permitted without license from IHS
Not for Resale

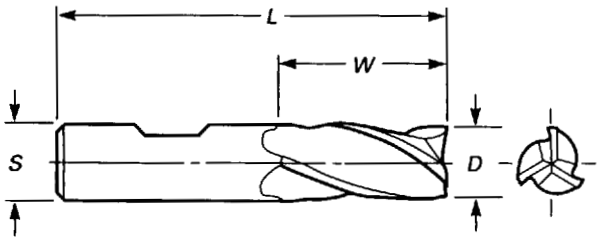

TABLE 54 LONG LENGTH, THREE-FLUTE, MEDIUM HELIX, CENTER CUTTING, SINGLE-END END MILLS WITH WELDON SHANKS: HIGH-SPEED STEEL

Cutter Dia., *D*	Overall Length, *L*	Shank Dia., *S*	Cut Length, *W*
1/4	3 1/16	3/8	1 1/4
5/16	3 1/8	3/8	1 3/8
3/8	3 1/4	3/8	1 1/2
7/16	3 3/4	1/2	1 3/4
1/2	4	1/2	2
5/8	4 5/8	5/8	2 1/2
3/4	5 1/4	3/4	3
1	6 1/2	1	4
1 1/4	6 1/2	1 1/4	4
1 1/2	6 1/2	1 1/4	4
1 3/4	6 1/2	1 1/4	4
2	6 1/2	1 1/4	4

GENERAL NOTES:
(a) All dimensions are given in inches.
(b) For tolerances, see Table 74.
(c) For shank dimensions, see Table 70A.
(d) Right-hand cutters with right-hand helixes are standard. Helix angle is greater than 19 deg, but not more than 39 deg.

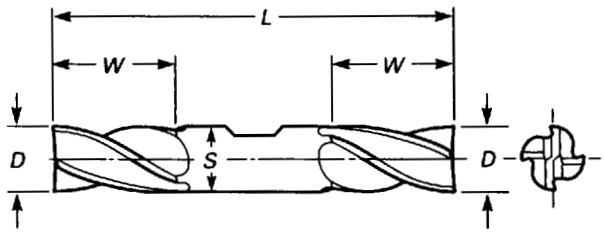

TABLE 55 REGULAR LENGTH, FOUR-FLUTE, MEDIUM HELIX, CENTER CUTTING, DOUBLE-END END MILLS WITH WELDON SHANKS: HIGH-SPEED STEEL

Cutter Dia., *D*	Overall Length, *L*	Shank Dia., *S*	Cut Length, *W*
1/8	3 1/16	3/8	3/8
3/16	3 1/4	3/8	1/2
1/4	3 3/8	3/8	5/8
5/16	3 1/2	3/8	3/4
3/8	3 1/2	3/8	3/4
1/2	4 1/8	1/2	1
5/8	5	5/8	1 3/8
3/4	5 5/8	3/4	1 5/8
7/8	6 1/8	7/8	1 7/8
1	6 3/8	1	1 7/8

GENERAL NOTES:
(a) All dimensions are given in inches.
(b) For tolerances, see Table 74.
(c) For shank dimensions, see Table 70A.
(d) Right-hand cutters with right-hand helixes are standard. Helix angle is greater than 19 deg, but not more than 39 deg.

Copyright ASME International
Provided by IHS under license with ASME
No reproduction or networking permitted without license from IHS
Not for Resale

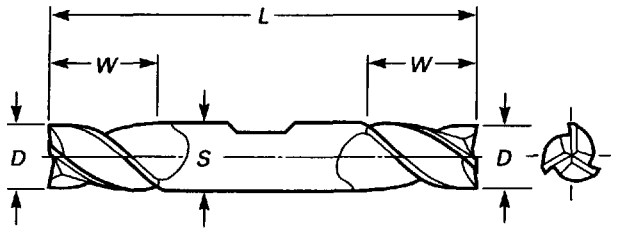

TABLE 56 REGULAR LENGTH, THREE-FLUTE, MEDIUM HELIX, CENTER CUTTING, DOUBLE-END END MILLS WITH WELDON SHANKS: HIGH-SPEED STEEL

Cutter Dia., *D*	Overall Length, *L*	Shank Dia., *S*	Cut Length, *W*
1/8	3 1/16	3/8	3/8
3/16	3 1/4	3/8	1/2
1/4	3 3/8	3/8	5/8
5/16	3 1/2	3/8	3/4
3/8	3 1/2	3/8	3/4
7/16	4 1/8	1/2	1
1/2	4 1/8	1/2	1
9/16	5	5/8	1 3/8
5/8	5	5/8	1 3/8
3/4	5 5/8	3/4	1 5/8
1	6 3/8	1	1 7/8

GENERAL NOTES:
(a) All dimensions are given in inches.
(b) For tolerances, see Table 74.
(c) For shank dimensions, see Table 70A.
(d) Right-hand cutters with right-hand helixes are standard. Helix angle is greater than 19 deg, but not more than 39 deg.

Copyright ASME International
Provided by IHS under license with ASME
No reproduction or networking permitted without license from IHS
Not for Resale

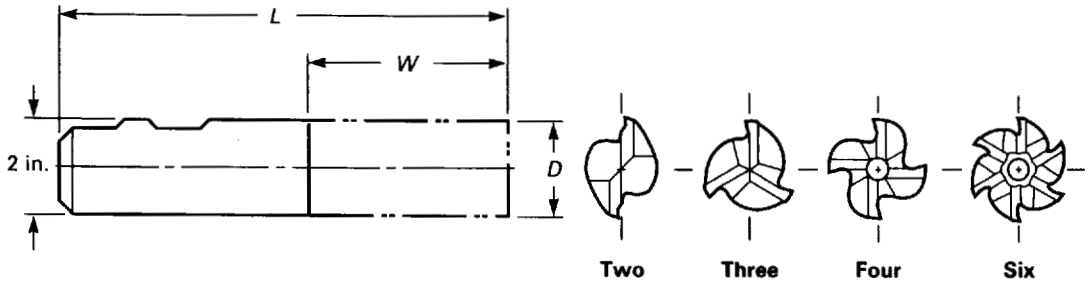

TABLE 57 HEAVY DUTY, MEDIUM HELIX, SQUARE END, SINGLE-END END MILLS WITH 2 in. DIAMETER SHANKS: HIGH-SPEED STEEL

Cutter Dia, *D*	No. of Flutes	Overall Length, *L*	Cut Length, *W*
2	2	5 3/4	2
2	2	6 3/4	3
2	2	7 3/4	4
2	2	9 3/4	6
2 1/2	2	7 3/4	4
2 1/2	2	9 3/4	6
2	3	6 3/4	3
2	3	7 3/4	4
2	3	9 3/4	6
2 1/2	3	7 3/4	4
2	4	5 3/4	2
2	4	7 3/4	4
2	4	9 3/4	6
2 1/2	4	7 3/4	4
2 1/2	4	9 3/4	6
2	6	5 3/4	2
2	6	7 3/4	4
2	6	9 3/4	6
2	6	11 3/4	8
2 1/2	6	7 3/4	4
2 1/2	6	9 3/4	6
2 1/2	6	11 3/4	8

GENERAL NOTES:
(a) All dimensions are given in inches.
(b) For tolerances, see Table 74.
(c) For shank dimensions, see Table 70A or Tables 71A and 72A.
(d) Right-hand cutters with right-hand helixes are standard. Helix angle is greater than 19 deg, but not more than 39 deg.

Copyright ASME International
Provided by IHS under license with ASME
No reproduction or networking permitted without license from IHS
Not for Resale

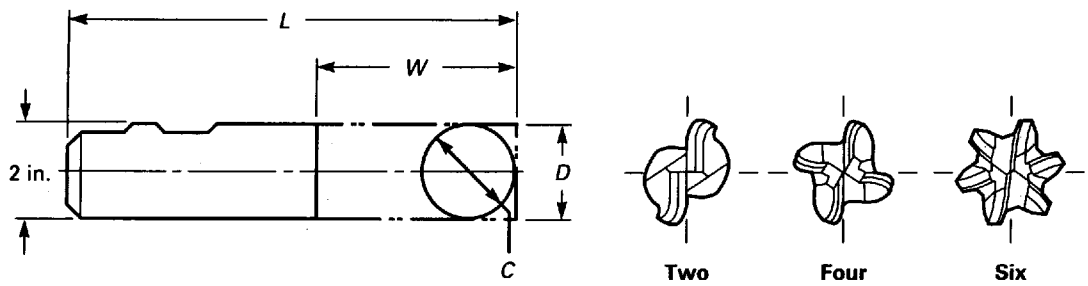

TABLE 58 HEAVY DUTY, MEDIUM HELIX, BALL END, SINGLE-END END MILLS WITH 2 in. DIAMETER SHANKS: HIGH-SPEED STEEL

Cutter and End Circle Dia, *D* and *C*	No. of Flutes	Overall Length, *L*	Cut Length, *W*
2	2	$8\frac{3}{4}$	5
2	4	$8\frac{3}{4}$	5
$2\frac{1}{2}$	4	$8\frac{3}{4}$	5
2	6	$7\frac{3}{4}$	4
2	6	$9\frac{3}{4}$	6
2	6	$11\frac{3}{4}$	8

GENERAL NOTES:
(a) All dimensions are given in inches.
(b) For tolerances, see Table 74.
(c) For shank dimensions, see Table 70A or Tables 71A and 72A.
(d) Right-hand cutters with right-hand helixes are standard. Helix angle is greater than 19 deg, but not more than 39 deg.

Copyright ASME International
Provided by IHS under license with ASME
No reproduction or networking permitted without license from IHS
Not for Resale

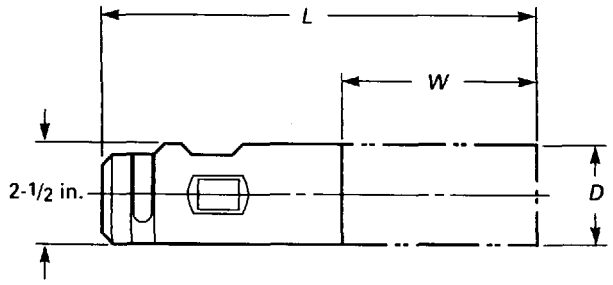

TABLE 59 HEAVY DUTY, MEDIUM HELIX, SINGLE-END, 2½ in. END MILLS: HIGH-SPEED STEEL

Cutter Dia., *D*	No. of Flutes	Overall Length, *L*	Cut Length, *W*
2½	3	12	8
2½	3	14	10
2½	6	8	4
2½	6	10	6
2½	6	12	8
2½	6	14	10
2½	6	16	12
3	2	7¾	4
3	2	9¾	6
3	3	7¾	4
3	3	9¾	6
3	3	11¾	8
3	8	7¾	4
3	8	9¾	6
3	8	11¾	8
3	8	13¾	10
3	8	15¾	12

GENERAL NOTES:
(a) All dimensions are given in inches.
(b) For tolerances, see Table 74.
(c) For shank dimensions, see Tables 71A and 72A.
(d) Right-hand cutters with right-hand helixes are standard. Helix angle is greater than 19 deg, but not more than 30 deg.

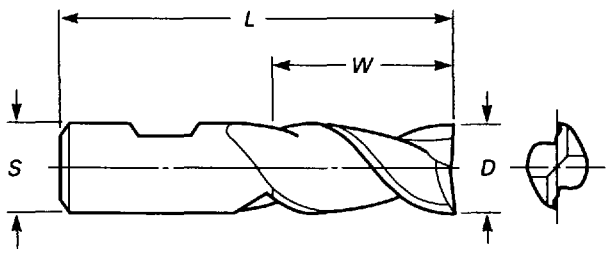

TABLE 60 REGULAR LENGTH, TWO-FLUTE, HIGH HELIX, SINGLE-END END MILLS WITH WELDON SHANKS: HIGH-SPEED STEEL

Cutter Dia., *D*	Overall Length, *L*	Shank Dia., *S*	Cut Length, *W*
¼	2 7/16	⅜	⅝
5/16	2 ½	⅜	¾
⅜	2 ½	⅜	¾
7/16	2 11/16	⅜	1
½	3 ¼	½	1¼
⅝	3 ¾	⅝	1⅝
¾	3 ⅞	¾	1⅝
⅞	4 ⅛	⅞	1⅞
1	4 ½	1	2
1¼	4 ½	1¼	2
1½	4 ½	1¼	2
2	4 ½	1¼	2

GENERAL NOTES:
(a) All dimensions are given in inches.
(b) For tolerances, see Table 74.
(c) For shank dimensions, see Table 70A.
(d) Right-hand cutters with right-hand helixes are standard. Helix angle is greater than 39 deg.

Copyright ASME International
Provided by IHS under license with ASME
No reproduction or networking permitted without license from IHS
Not for Resale

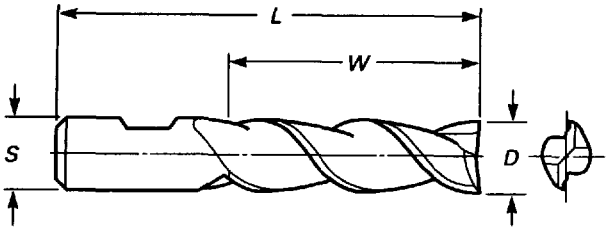

TABLE 61 LONG LENGTH, TWO-FLUTE, HIGH HELIX, SINGLE-END END MILLS WITH WELDON SHANKS: HIGH-SPEED STEEL

Cutter Dia., *D*	Overall Length, *L*	Shank Dia., *S*	Cut Length, *W*
1/4	3 1/16	3/8	1 1/4
5/16	3 1/8	3/8	1 3/8
3/8	3 1/4	3/8	1 1/2
7/16	3 3/4	1/2	1 3/4
1/2	4	1/2	2
5/8	4 5/8	5/8	2 1/2
3/4	5 1/4	3/4	3
1	6 1/2	1	4
1 1/4	6 1/2	1 1/4	4
1 1/2	6 1/2	1 1/4	4
2	6 1/2	1 1/4	4

GENERAL NOTES:
(a) All dimensions are given in inches.
(b) For tolerances, see Table 74.
(c) For shank dimensions, see Table 70A.
(d) Right-hand cutters with right-hand helixes are standard. Helix angle is greater than 39 deg.

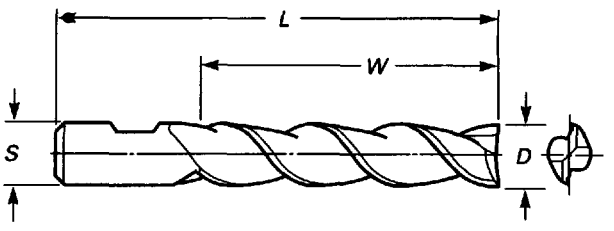

TABLE 62 EXTRA LONG LENGTH, TWO-FLUTE, HIGH HELIX, SINGLE-END END MILLS WITH WELDON SHANKS: HIGH-SPEED STEEL

Cutter Dia., *D*	Overall Length, *L*	Shank Dia., *S*	Cut Length, *W*
1/4	3 9/16	3/8	1 3/4
5/16	3 3/4	3/8	2
3/8	4 1/4	3/8	2 1/2
1/2	5	1/2	3
5/8	6 1/8	5/8	4
3/4	6 1/4	3/4	4
1	8 1/2	1	6
1 1/4	8 1/2	1 1/4	6
1 1/2	10 1/2	1 1/4	8

GENERAL NOTES:
(a) All dimensions are given in inches.
(b) For tolerances, see Table 74.
(c) For shank dimensions, see Table 70A.
(d) Right-hand cutters with right-hand helixes are standard. Helix angle is greater than 39 deg.

Copyright ASME International
Provided by IHS under license with ASME
No reproduction or networking permitted without license from IHS
Not for Resale

TABLE 63 FOUR-FLUTE, CENTER CUTTING, MEDIUM HELIX, SINGLE-END END MILLS WITH WELDON SHANKS

Cutter Dia	No. of Flutes	Overall Length	Shank Dia	Cut Length
1/8	4	2 5/16	3/8	3/8
3/16	4	2 3/8	3/8	1/2
1/4	4	2 7/16	3/8	5/8
5/16	4	2 1/2	3/8	3/4
3/8	4	2 1/2	3/8	3/4
1/2	4	3 1/4	1/2	1 1/4
5/8	4	3 3/4	5/8	1 5/8
3/4	4	3 7/8	3/4	1 5/8
1	4	4 1/2	1	2
1 1/4	4	4 1/2	1 1/4	2
1 1/2	4	4 1/2	1 1/4	2

GENERAL NOTES:
(a) All dimensions are given in inches.
(b) For all other tolerances, see Table 74.
(c) For shank dimensions, see Table 70A.
(d) Right-hand cutters with right-hand helixes are standard. Helix angle is greater than 19 deg, but not more than 39 deg.

TABLE 64 BALL END, TWO-FLUTE, MEDIUM HELIX, SINGLE-END END MILLS WITH WELDON SHANKS

Cutter Dia	Overall Length	Shank Dia	Cut Length
1/8	2 5/16	3/8	3/8
3/16	2 3/8	3/8	1/2
1/4	2 7/16	3/8	5/8
5/16	2 1/2	3/8	3/4
3/8	2 1/2	3/8	3/4
1/2	3 1/4	1/2	1
5/8	3 3/4	5/8	1 3/8
3/4	3 7/8	3/4	1 5/8
1	4 3/4	1	2 1/4
1 1/4	5	1 1/4	2 1/2
1 1/2	5	1 1/4	2 1/2

GENERAL NOTES:
(a) All dimensions are given in inches.
(b) For all other tolerances, see Table 74.
(c) For shank dimensions, see Table 70A.
(d) Right-hand cutters with right-hand helixes are standard. Helix angle is greater than 19 deg, but not more than 39 deg.

TABLE 65 LONG LENGTH, FOUR-FLUTE, CENTER CUTTING, MEDIUM HELIX, SINGLE-END END MILLS WITH WELDON SHANKS

Cutter Dia	No. of Flutes	Overall Length	Shank Dia	Cut Length
1/4	4	3 1/8	3/8	1 1/4
3/8	4	3 1/8	3/8	1 3/8
3/8	4	3 1/4	3/8	1 1/2
1/2	4	4	1/2	2
5/8	4	4 5/8	5/8	2 1/2
3/4	4	5 1/4	3/4	3
7/8	4	5 3/4	7/8	3 1/2
1	4	6 1/2	1	4
1 1/4	4	6 1/2	1 1/4	4

GENERAL NOTES:
(a) All dimensions are given in inches.
(b) For all other tolerances, see Table 74.
(c) For shank dimensions, see Table 70A.
(d) Right-hand cutters with right-hand helixes are standard. Helix angle is greater than 19 deg, but not more than 39 deg.

TABLE 66 BALL END, FOUR-FLUTE, MEDIUM HELIX, SINGLE-END END MILLS WITH WELDON SHANKS

Cutter Dia	No. of Flutes	Overall Length	Shank Dia	Cut Length
1/8	4	2 5/16	3/8	3/8
3/16	4	2 3/8	3/8	1/2
1/4	4	2 7/16	3/8	5/8
5/16	4	2 1/2	3/8	3/4
3/8	4	2 1/2	3/8	3/4
1/2	4	3 1/4	1/2	1 1/4
5/8	4	3 3/4	5/8	1 5/8
3/4	4	3 7/8	3/4	1 5/8
1	4	4 1/2	1	2

GENERAL NOTES:
(a) All dimensions are given in inches.
(b) For all other tolerances, see Table 74.
(c) For shank dimensions, see Table 70A.
(d) Right-hand cutters with right-hand helixes are standard. Helix angle is greater than 19 deg, but not more than 39 deg.

Copyright ASME International
Provided by IHS under license with ASME
No reproduction or networking permitted without license from IHS
Not for Resale

TABLE 67 TWO-FLUTE, MEDIUM HELIX, SINGLE-END END MILLS WITH WELDON SHANKS

Cutter Dia	Overall Length	Shank Dia	Cut Length
1/8	2 5/16	3/8	3/8
3/16	2 3/8	3/8	7/16
1/4	2 7/16	3/8	1/2
5/16	2 1/2	3/8	9/16
3/8	2 1/2	3/8	9/16
1/2	3 1/4	1/2	1
5/8	3 3/4	5/8	1 5/16
3/4	3 7/8	3/4	1 5/16
1	4 1/2	1	1 5/8
1 1/4	4 1/2	1 1/4	1 5/8
1 1/2	4 1/2	1 1/4	1 5/8

GENERAL NOTES:
(a) All dimensions are given in inches.
(b) For all other tolerances, see Table 74.
(c) For shank dimensions, see Table 70A.
(d) Right-hand cutters with right-hand helixes are standard. Helix angle is greater than 19 deg, but not more than 39 deg.

TABLE 68 EXTRA LONG LENGTH, MULTIPLE-FLUTE, CENTER CUTTING, MEDIUM HELIX SINGLE-END END MILLS WITH WELDON SHANKS

Cutter Dia	No. of Flutes	Overall Length	Shank Dia	Cut Length
3/8	4	4 1/4	3/8	2 1/2
1/2	4	5	1/2	3
5/8	4	6 1/8	5/8	4
3/4	4	6 1/4	3/4	4
1	4	8 1/2	1	6
1 1/4	6	8 1/2	1 1/4	6

GENERAL NOTES:
(a) All dimensions are given in inches.
(b) For all other tolerances, see Table 74.
(c) For shank dimensions, see Table 70A.
(d) Right-hand cutters with right-hand helixes are standard. Helix angle is greater than 19 deg, but not more than 39 deg.

Copyright ASME International
Provided by IHS under license with ASME
No reproduction or networking permitted without license from IHS
Not for Resale

Copyright ASME International
Provided by IHS under license with ASME
No reproduction or networking permitted without license from IHS

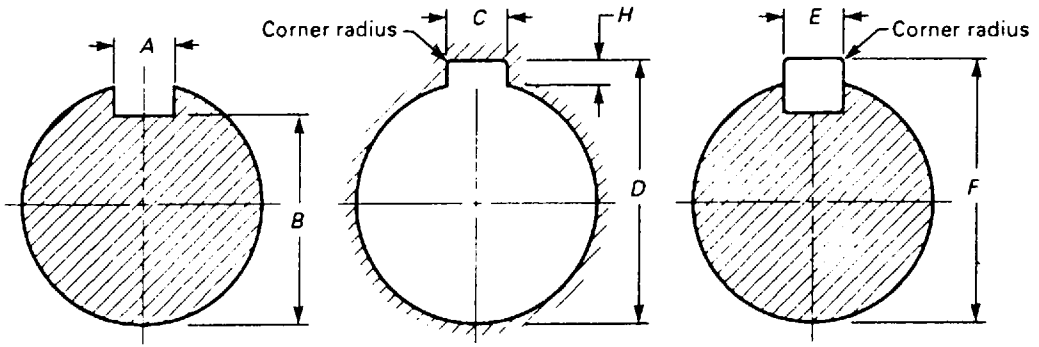

Arbor and Keyseat | Cutter Hole and Keyway | Arbor and Key

TABLE 69 KEYS AND KEYWAYS FOR MILLING CUTTERS AND ARBORS

Nominal Arbor and Cutter	Nominal Size Key	Arbor and Keyseat				Hole and Keyway						Arbor and Key			
		A		*B*		*C*		*D*		*H*,	Corner	*E*		*F*	
		Max	Min	Max	Min	Max	Min	Max	Min	Nom	Radius	Max	Min	Max	Min
1/2	3/32	0.0947	0.0937	0.4531	0.4481	0.106	0.099	0.5678	0.5578	3/64	0.020	0.0932	0.0927	0.5468	0.5408
5/8	1/8	0.1260	0.1250	0.5625	0.5575	0.137	0.130	0.7085	0.6985	1/16	1/32	0.1245	0.1240	0.6875	0.6815
3/4	1/8	0.1260	0.1250	0.6875	0.6825	0.137	0.130	0.8325	0.8225	1/16	1/32	0.1245	0.1240	0.8125	0.8065
7/8	1/8	0.1260	0.1250	0.8125	0.8075	0.137	0.130	0.9575	0.9475	1/16	1/32	0.1245	0.1240	0.9375	0.9315
1	1/4	0.2510	0.2500	0.8438	0.8388	0.262	0.255	1.1140	1.1040	3/32	3/64	0.2495	0.2490	1.0940	1.0880
1 1/4	5/16	0.3135	0.3125	1.0630	1.0580	0.343	0.318	1.3950	1.3850	1/8	1/16	0.3120	0.3115	1.3750	1.3690
1 1/2	3/8	0.3760	0.3750	1.2810	1.2760	0.410	0.385	1.6760	1.6660	5/32	1/16	0.3745	0.3740	1.6560	1.6500
1 3/4	7/16	0.4385	0.4375	1.5000	1.4950	0.473	0.448	1.9580	1.9480	3/16	1/16	0.4370	0.4365	1.9380	1.9320
2	1/2	0.5010	0.5000	1.6870	1.6820	0.535	0.510	2.2080	2.1980	3/16	1/16	0.4995	0.4990	2.1880	2.1820
2 1/2	5/8	0.6260	0.6250	2.0940	2.0890	0.660	0.635	2.7430	2.7330	7/32	1/16	0.6245	0.6240	2.7180	2.7120
3	3/4	0.7510	0.7500	2.5000	2.4950	0.785	0.760	3.2750	3.2650	1/4	3/32	0.7495	0.7490	3.2500	3.2440
3 1/2	7/8	0.8760	0.8750	3.000	2.9950	0.910	0.885	3.9000	3.8900	3/8	3/32	0.8745	0.8740	3.8750	3.8690
4	1	1.0010	1.0000	3.3750	3.3700	1.035	1.010	4.4000	4.3900	3/8	3/32	0.9995	0.9990	4.3750	4.3690
4 1/2	1 1/8	1.1260	1.1250	3.8130	3.8080	1.160	1.135	4.9630	4.9530	7/16	1/8	1.1245	1.1240	4.9380	4.9320
5	1 1/4	1.2510	1.2500	4.2500	4.2450	1.285	1.260	5.5250	5.5150	1/2	1/8	1.2495	1.2490	5.5000	5.4940

GENERAL NOTE: All dimensions are given in inches.

Not for Resale

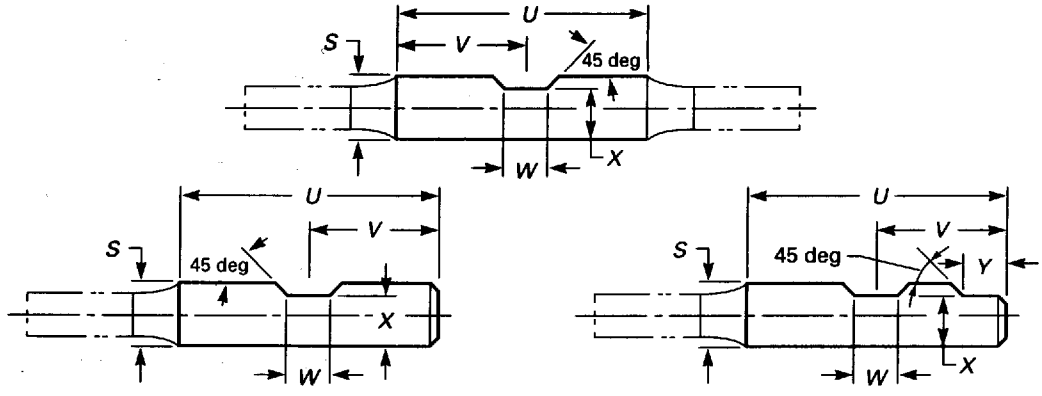

TABLE 70A WELDON SHANKS

Shank Dia, *S*	Shank Length, *U*	*V*	*W* Min	*W* Max	*X*	*Y*
3/8	1 9/16	25/32	0.280	0.282	0.325	...
1/2	1 25/32	57/64	0.330	0.332	0.440	...
5/8	1 29/32	61/64	0.400	0.402	0.560	...
3/4	2 1/32	1 1/64	0.455	0.457	0.675	...
7/8	2 1/32	1 1/64	0.455	0.457	0.810	1/2
1	2 9/32	1 9/64	0.515	0.517	0.925	1/2
1 1/4	2 9/32	1 9/64	0.515	0.517	1.156	1/2
1 1/2	2 11/16	1 3/16	0.515	0.517	1.406	9/16
2	3 1/4	1 27/32	0.700	0.702	1.900	27/32
2 1/2	3 1/2	1 15/16	0.700	0.702	2.400	27/32

TABLE 70B TOLERANCES FOR WELDON SHANKS

Dimension	Direction	Range	Tolerance
Shank Dia, *S*	Minus	All sizes	−0.0001 to −0.0005
Shank Length, *U*	Plus or minus	All sizes	1/32
V	Plus or minus	All sizes	1/64
X	Minus	All sizes	1/64
Y	Plus or minus	7/8 to 2 1/2 incl.	1/32

GENERAL NOTE: All dimensions are given in inches.

Copyright ASME International
Provided by IHS under license with ASME
No reproduction or networking permitted without license from IHS
Not for Resale

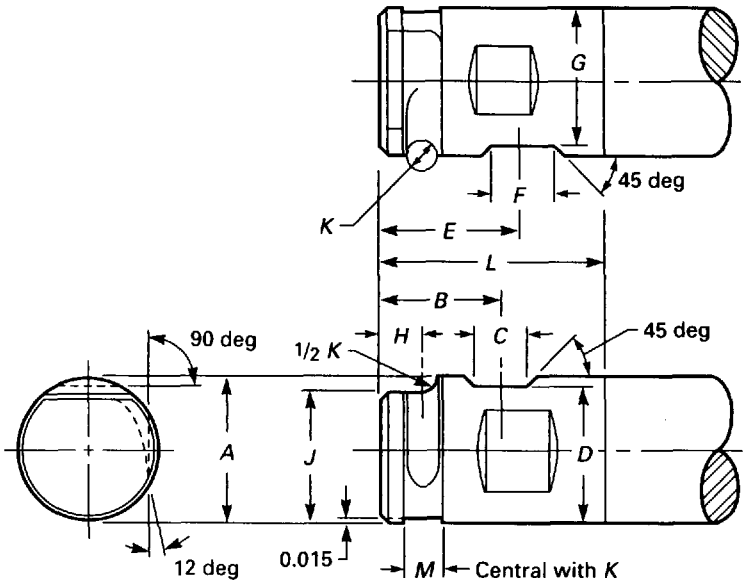

TABLE 71A COMBINATION SHANKS[1] FOR END MILLS, RIGHT-HAND CUT

Shank Dia, *A*	Shank Length, *L*	*B*	*C*	*D*	*E*	*F*	*G*	*H*	*J*	*K*	*M*
1 1/2	2 11/16	1 3/16	0.515	1.406	1 1/2	0.515	1.371	9/16	1.302	0.377	7/16
2	3 1/4	1 23/32	0.700	1.900	1 3/4	0.700	1.809	5/8	1.772	0.440	1/2
2 1/2	3 1/2	1 15/16	0.700	2.400	2	0.700	2.312	3/4	2.245	0.503	9/16

NOTE:
(1) Modified for use as a weldon or a pin drive shank.

TABLE 71B TOLERANCES FOR COMBINATION SHANKS[1] FOR END MILLS, RIGHT-HAND CUT

Dimension	Direction	Tolerance
Shank Dia, *A*	Minus	−0.0001 to −0.0005
Shank Length, *L*	Plus or minus	1/32
B	Plus or minus	1/64
C	Plus	0.002
D	Minus	1/64
E	Plus or minus	1/64
F	Plus or minus	0.005
G	Minus	1/64
H	Plus	1/64
J	Plus or minus	0.002
K	Plus	0.003

GENERAL NOTE: All dimensions are given in inches.

NOTE:
(1) Modified for use as a weldon or a pin drive shank.

Copyright ASME International
Provided by IHS under license with ASME
No reproduction or networking permitted without license from IHS
Not for Resale

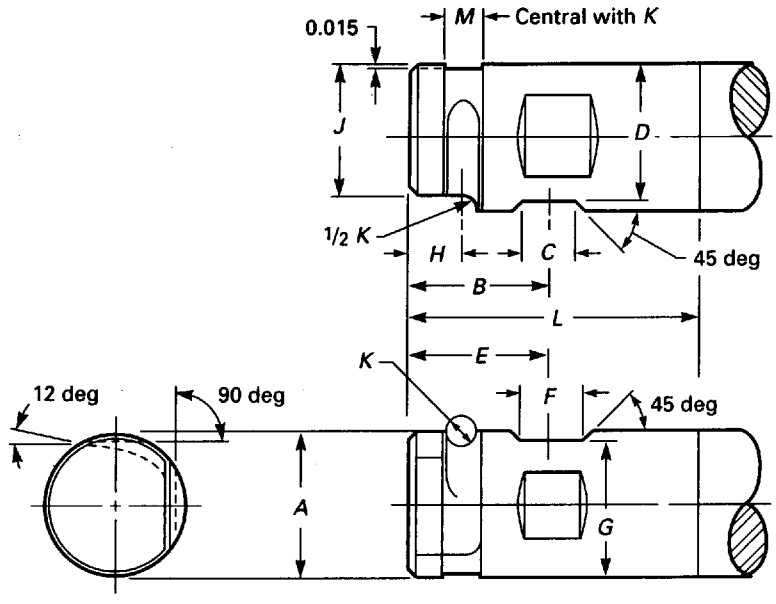

TABLE 72A COMBINATION SHANKS[1] FOR END MILLS, LEFT-HAND CUT

Shank Dia, *A*	Shank Length, *L*	*B*	*C*	*D*	*E*	*F*	*G*	*H*	*J*	*K*	*M*
1 1/2	2 11/16	1 3/16	0.515	1.406	1 1/2	0.515	1.371	9/16	1.302	0.377	7/16
2	3 1/4	1 23/32	0.700	1.900	1 3/4	0.700	1.809	5/8	1.772	0.440	1/2
2 1/2	3 1/2	1 15/16	0.700	2.400	2	0.700	2.312	3/4	2.245	0.503	9/16

NOTE:
(1) Modified for use as a weldon or a pin drive shank.

TABLE 72B TOLERANCES FOR COMBINATION SHANKS[1] FOR END MILLS, LEFT-HAND CUT

Dimension	Direction	Tolerance
Shank Dia, *A*	Minus	−0.0001 to −0.0005
Shank Length, *L*	Plus or minus	1/32
B	Plus or minus	1/64
C	Plus	0.002
D	Minus	1/64
E	Plus or minus	1/64
F	Plus or minus	0.005
G	Minus	1/64
H	Plus	1/64
J	Plus or minus	0.002
K	Plus	0.003

GENERAL NOTE: All dimensions are given in inches.

NOTE:
(1) Modified for use as a weldon or a pin drive shank.

Copyright ASME International
Provided by IHS under license with ASME
No reproduction or networking permitted without license from IHS
Not for Resale

TABLE 73 TOLERANCES FOR STANDARD MILLING CUTTERS

Outside Diameter Tolerances		
Plain milling cutters (all types)	+0.015	−0.015
Side milling cutters	+0.015	−0.015
Staggered tooth side milling cutters	+0.015	−0.015
Half side milling cutters	+0.015	−0.015
Metal slitting saws, all types	+0.015	−0.015
Screw slotting cutters	+0.015	−0.015
Single and double angle cutters	+0.015	−0.015
Concave and convex cutters	+1/16	−1/16
Corner rounding cutters, arbor type	+1/16	−1/16
Gear and sprocket cutters	+1/16	−1/16
Corner rounding cutters, shank type	+0.010	−0.010
Shell mills	+1/64	−0
T-slot cutters	+0.000	−0.010
Woodruff keyseat cutters, shank type		
1/4– 3/4 incl.	+0.010	+0.015
7/8–1 1/8 incl.	+0.012	+0.017
1 1/4–1 1/2 incl.	+0.015	+0.020
Woodruff keyseat cutters, arbor type	+0.002	−0.002
Circle Diameter Tolerances		
Convex cutters	+0.002	−0.002
Concave cutters		
Up to 7/16 in. dia of circle incl.	+0.002	−0.001
Over 7/16 in. dia of circle	+0.004	−0.002
Corner rounding cutters		
Up to 1/8 in. radius of circle incl.	+0.001	−0.001
Over 1/8 in. radius of circle	+0.002	−0.001
Angle Tolerances		
Single angle cutters	+ 10 min.	− 10 min.
Double angle cutters, half angle	+ 10 min.	− 10 min.
Overall Length Tolerances		
Shank type cutters	+ 1/16	−1/16
Shank Diameter Tolerances		
All cutters with straight shanks (For weldon shanks, see Tables 67–69)	−0.0001	−0.0005

Copyright ASME International
Provided by IHS under license with ASME
No reproduction or networking permitted without license from IHS Not for Resale

TABLE 73 TOLERANCES FOR STANDARD MILLING CUTTERS (CONT'D)

Cut Length or Cutting Face Width Tolerances		
Plain milling cutters		
Up to 1 in. face	+0.001	−0.001
Over 1 in. to 2 in. incl	+0.010	−0.000
Over 2 in. to 8 in. incl	+0.020	−0.000
Side milling cutters	+0.002	−0.001
Staggered tooth side milling cutters		
Up to 3/4 in. face incl.	+0.0000	−0.0005
Over 3/4 in. to 1 in. incl.	+0.0000	−0.0010
Half side milling cutters	+0.015	−0.000
Metal slitting saws and screw slotting cutters	+0.001	−0.001
Single and double angle cutters	+0.015	−0.015
Shell mills	+1/64	−1/64
T-slot cutters	+ 0.000	− 0.005
Woodruff keyseat cutters, shank type		
1/16 in. to 5/32 in. face incl.	+ 0.0000	− 0.0005
3/16 in. to 7/32 in. face incl.	− 0.0002	− 0.0007
1/4 in.	− 0.0003	− 0.0008
5/16 in.	− 0.0004	− 0.0009
3/8 in.	− 0.0005	− 0.0010
Woodruff keyseat cutters, arbor type		
3/16 in. face	− 0.0002	− 0.0007
1/4 in. face	− 0.0003	− 0.0008
5/16 in. face	− 0.0004	− 0.0009
3/8 in. face and over	− 0.0005	− 0.0010
Roller chain sprocket milling cutters	+ 0.010	− 0.000
Concave and corner rounding cutters, arbor type	+ 0.010	− 0.010
Neck Diameter Tolerances		
T-slot cutters	+ 0.000	− 0.005
Hole Diameter Tolerances		
All cutters except shell mills and screw slotting cutters		
Through 1 in. hole dia, if not over 3 in. long	+ 0.00075	− 0.0000
Through 1 in. hole dia, if over 3 in. long	+ 0.0010	− 0.0000
Over 1 in. through 2 in. hole dia	+ 0.0010	− 0.0000
Shell mills	+ 0.0005	− 0.0000
Screw slotting cutters	+ 0.0010	− 0.0000

Copyright ASME International
Provided by IHS under license with ASME
No reproduction or networking permitted without license from IHS Not for Resale

TABLE 73 TOLERANCES FOR STANDARD MILLING CUTTERS (CONT'D)

Radial and Axial Runout for Standard Milling Cutters
[All Figures are Full Indicator Movement (FIM)]

Type of Cutter	Nominal Dia Over	Nominal Dia Through	Max Radial Runout (When Rotated on a Stationary Shoulder Test Arbor) Form Relieved	Max Radial Runout (When Rotated on a Stationary Shoulder Test Arbor) Profile Sharpened	Max Axial Runout (When Rotated on a Stationary Shoulder Test Arbor) Form Relieved	Max Axial Runout (When Rotated on a Stationary Shoulder Test Arbor) Profile Sharpened
Arbor type cutters:						
Side mills, Shell mills, Keyseat		2	0.003	0.002	0.003	0.002
Angular	2	5	0.004	0.003	0.004	0.003
Gear, Convex	5	8½	0.005	0.004	0.005	0.004
Concave						
Corner rounding						
Plain mills		5		0.003		0.002
	5	8		0.004		0.003
Metal slitting saws		5		0.003	(see section below)	
	5	12		0.004		
Screw slotting cutters	All Sizes			0.005	(see section below)	

Axial Runout of Metal Slitting Saws and Screw Slotting Cutters

Type of Cutter	Nominal Diameter Over	Nominal Diameter Through	Max Axial Runout (When Clamped Between Standard Dia Collars on Test Arbor) Nominal Face Width Through 1/32	Over 1/32 thru 1/16	Over 1/16 thru 1/8	Over 1/8 thru 3/16	Over 3/16 thru 1/4	Over 1/4 thru 5/16
Metal slitting saws and screw slotting cutters		3	0.004	0.003	0.003	0.002		
	3	4	0.005	0.005	0.004	0.003		
	4	6		0.007	0.006	0.005	0.004	
	6	8			0.008	0.006	0.005	
	8	12				0.007	0.006	0.005

Radial Runout of Shank Type Cutters

Type of Cutter	Flute Length Over	Flute Length Through	Max Radial Runout of Periphery With Respect to Shank (Shank Rotated in Vee Block)
Shank type cutters		2	0.002
	2	4	0.003
	4	8	0.004

Axial Runout of Shank Type Cutters

Type of Cutter	Diameter Over	Diameter Through	Max Axial Runout
Keyseat cutters	All	All	0.001
All others		1	0.002
	1	2½	0.003

GENERAL NOTES:
(a) All dimensions are given in inches.
(b) Additional tolerances may be shown in specific tables.

Copyright ASME International
Provided by IHS under license with ASME
No reproduction or networking permitted without license from IHS Not for Resale

TABLE 74 TOLERANCES FOR STANDARD END MILLS

Outside Diameter Tolerances		
MEDIUM HELIX SERIES		
Double end, 3/16 S.S.		
4 flute [Note (1)]	+ 0.003	− 0.000
2 flute, stub and regular length	+ 0.000	− 0.0015
2 flute, long length [Note (1)]	+ 0.003	− 0.000
Single end, weldon shank		
Multiple flute	+ 0.003	− 0.000
2 flute, stub length	+ 0.000	− 0.0015
2 flute, regular and long length	+ 0.003	− 0.000
Double end, weldon shank		
4 flute [Note (1)]	+ 0.003	− 0.000
2 flute	+ 0.000	− 0.0015
Center cutting single end, weldon shank		
3 and 4 flute	+ 0.003	− 0.000
Center cutting, double end, weldon shank		
3 and 4 flute	+ 0.000	− 0.0015
Heavy duty, single end, 2 in. & 2 1/2 in. shank		
2, 3, 4, and 6 flute	+ 0.005	− 0.000
HIGH HELIX SERIES		
Single end, weldon shank		
2 flute	+ 0.003	− 0.000
PREMIUM HIGH SPEED STEEL SERIES		
Center cutting, single end, weldon shank		
2 flute and multiple flute	+ 0.003	− 0.000
Shank Diameter Tolerances		
Straight shanks (including weldon shanks)	− 0.0001	− 0.0005
(See Tables 62–65 for design features and tolerances for weldon and combination shanks)		
Length of Cut Tolerances		
All except miniature and heavy duty	+ 1/32	− 1/32
Miniature	+ 1/32	− 1/64
Heavy duty, 2 in. & 2 1/2 in. shank	+ 1/16	− 1/16

Copyright ASME International
Provided by IHS under license with ASME
No reproduction or networking permitted without license from IHS Not for Resale

TABLE 74 TOLERANCES FOR STANDARD END MILLS (CONT'D)

Overall Length Tolerances

HSS Except Heavy Duty 3 in. O. D.	+ 1/16	- 1/16
HSS Heavy Duty 3 in. O. D.	+ 1/8	- 1/8

Radial Runout Tolerances

Flute Length		Maximum Radial Runout of Periphery With Respect to Shank (Shank Rotated in Vee Block)
Over	Through	
–	2	0.002
2	4	0.003
4	12	0.004

Axial Runout of End Mill Teeth

Diameter		Maximum Axial Runout
Over	Through	
–	1	0.002
1	3	0.003

GENERAL NOTES:
(a) All dimensions are given in inches.
(b) Additional tolerances may be shown in specific tables.

NOTE:
(1) If the shank is the same diameter as the cutting portion on double-end, straight shank end mills, and where the tolerance is normally positive, the tolerance on the cutting diameter comes +0.0000 –0.0025.

Copyright ASME International
Provided by IHS under license with ASME
No reproduction or networking permitted without license from IHS Not for Resale

APPENDIX A
CONVERSION TABLES FROM INCH TO MILLIMETER

(This Appendix is not part of ASME B94.19-1997 and is included for information only.)

Any dimension in this Standard can be converted by the addition of its components from the tables in this Appendix.

Consider the actual or implied precision of the values in customary units in determining the number of significant digits to be retained in the SI equivalents. (For an explanation of conversion techniques, see ANSI/IEEE 268-1982, Metric Practice.

TABLE A1 CONVERSION TABLE FROM INCH TO MILLIMETER

in.	mm	in.	mm	in.	mm	in.	mm
1/64	0.40	5/16	7.94	5/8	15.88	29/32	23.02
		21/64	8.33	41/64	16.27	59/64	23.42
1/32	0.79						
3/64	1.19	11/32	8.73	21/32	16.67	15/16	23.81
		23/64	9.13	43/64	17.07	61/64	24.21
1/16	1.58						
5/64	1.98	3/8	9.52	11/16	17.46	31/32	24.61
		25/64	9.92	45/64	17.86	63/64	25.00
3/32	2.38						
7/64	2.78	13/32	10.32	23/32	18.26	1	25.40
		27/64	10.72	47/64	18.65	2	50.80
1/8	3.18						
9/64	3.57	7/16	11.11	3/4	19.05	3	76.20
		29/64	11.51	49/64	19.45	4	101.60
5/32	3.97						
11/64	4.37	15/32	11.91	25/32	19.84	5	127.00
		31/64	12.30	51/64	20.24	6	152.40
3/16	4.76						
13/64	5.16	1/2	12.70	13/16	20.64	7	177.80
		33/64	13.10	53/64	21.04	8	203.20
7/32	5.56						
15/64	5.95	17/32	13.49	27/32	21.43	9	228.60
		35/64	13.89	55/64	21.83	10	254.00
1/4	6.35						
17/64	6.75	9/16	14.29	7/8	22.22	11	279.40
		37/64	14.68	57/64	22.62	12	304.80
9/32	7.14						
19/64	7.54	19/32	15.08				
		39/64	15.48				

Copyright ASME International
Provided by IHS under license with ASME
No reproduction or networking permitted without license from IHS
Not for Resale

TABLE A2 CONVERSION TABLE FROM INCH TO MILLIMETER FOR DECIMAL INCH VALUES LESS THAN 1 (DO NOT INTERPOLATE)

in.	0.xx0	0.xx1	0.xx2	0.xx3	0.xx4	0.xx5	0.xx6	0.xx7	0.xx8	0.xx9
0.00	0.00	0.03	0.05	0.08	0.10	0.13	0.15	0.18	0.20	0.22
0.01	0.25	0.28	0.30	0.33	0.36	0.38	0.41	0.43	0.46	0.48
0.02	0.51	0.53	0.56	0.58	0.61	0.64	0.66	0.69	0.71	0.74
0.03	0.76	0.79	0.81	0.84	0.86	0.89	0.91	0.94	0.96	0.99
0.04	1.02	1.04	1.07	1.09	1.12	1.14	1.17	1.19	1.22	1.24
0.05	1.27	1.30	1.32	1.35	1.37	1.40	1.42	1.45	1.47	1.50
0.06	1.52	1.55	1.57	1.60	1.63	1.65	1.68	1.70	1.73	1.75
0.07	1.78	1.80	1.83	1.85	1.88	1.90	1.93	1.96	1.98	2.01
0.08	2.03	2.06	2.08	2.11	2.13	2.16	2.18	2.21	2.24	2.26
0.09	2.29	2.31	2.34	2.36	2.39	2.41	2.44	2.46	2.49	2.51
0.10	2.54	2.57	2.59	2.62	2.64	2.67	2.69	2.72	2.74	2.77
0.11	2.79	2.82	2.84	2.87	2.90	2.92	2.95	2.97	3.00	3.02
0.12	3.05	3.07	3.10	3.12	3.15	3.18	3.20	3.23	3.25	3.28
0.13	3.30	3.33	3.35	3.38	3.40	3.43	3.45	3.48	3.50	3.53
0.14	3.56	3.58	3.61	3.63	3.66	3.68	3.71	3.73	3.76	3.78
0.15	3.81	3.84	3.86	3.88	3.91	3.94	3.96	3.99	4.01	4.04
0.16	4.06	4.09	4.11	4.14	4.17	4.19	4.22	4.24	4.27	4.29
0.17	4.32	4.34	4.37	4.39	4.42	4.44	4.47	4.50	4.52	4.55
0.18	4.57	4.60	4.62	4.65	4.67	4.70	4.72	4.75	4.78	4.80
0.19	4.83	4.85	4.88	4.90	4.93	4.95	4.98	5.00	5.03	5.05
0.20	5.08	5.11	5.13	5.16	5.18	5.21	5.23	5.26	5.28	5.31
0.21	5.33	5.36	5.39	5.41	5.44	5.46	5.49	5.51	5.54	5.56
0.22	5.59	5.61	5.64	5.66	5.69	5.72	5.74	5.77	5.79	5.82
0.23	5.84	5.87	5.89	5.92	5.94	5.97	5.99	6.02	6.05	6.07
0.24	6.10	6.12	6.15	6.17	6.20	6.22	6.25	6.27	6.30	6.32
0.25	6.35	6.38	6.40	6.43	6.45	6.48	6.50	6.53	6.55	6.58
0.26	6.60	6.63	6.65	6.68	6.71	6.73	6.76	6.78	6.81	6.83
0.27	6.86	6.88	6.91	6.93	6.96	6.98	7.01	7.04	7.06	7.09
0.28	7.11	7.14	7.16	7.19	7.21	7.24	7.26	7.29	7.32	7.34
0.29	7.37	7.39	7.42	7.44	7.47	7.49	7.52	7.54	7.57	7.59
0.30	7.62	7.64	7.67	7.70	7.72	7.75	7.77	7.80	7.83	7.85
0.31	7.87	7.90	7.92	7.95	7.98	8.00	8.03	8.05	8.08	8.10
0.32	8.13	8.15	8.18	8.20	8.23	8.26	8.28	8.31	8.33	8.36
0.33	8.38	8.41	8.43	8.46	8.48	8.51	8.53	8.56	8.59	8.61
0.34	8.64	8.66	8.69	8.71	8.74	8.76	8.79	8.81	8.84	8.86
0.35	8.89	8.92	8.94	8.97	8.99	9.02	9.04	9.07	9.09	9.12
0.36	9.14	9.17	9.19	9.22	9.25	9.27	9.30	9.32	9.35	9.38
0.37	9.40	9.42	9.45	9.47	9.50	9.52	9.55	9.58	9.60	9.63
0.38	9.65	9.68	9.70	9.73	9.75	9.78	9.80	9.83	9.85	9.88
0.39	9.91	9.93	9.96	9.98	10.01	10.03	10.06	10.08	10.11	10.13
0.40	10.16	10.19	10.21	10.24	10.26	10.29	10.31	10.34	10.36	10.39
0.41	10.41	10.44	10.46	10.49	10.52	10.54	10.57	10.59	10.62	10.64
0.42	10.67	10.69	10.72	10.74	10.77	10.80	10.82	10.85	10.87	10.90
0.43	10.92	10.95	10.97	11.00	11.02	11.05	11.07	11.10	11.13	11.15
0.44	11.18	11.20	11.23	11.25	11.28	11.30	11.32	11.35	11.38	11.40
0.45	11.43	11.46	11.48	11.51	11.53	11.56	11.58	11.61	11.63	11.66
0.46	11.68	11.71	11.73	11.76	11.79	11.81	11.84	11.86	11.89	11.91
0.47	11.94	11.96	11.99	12.01	12.04	12.06	12.09	12.12	12.14	12.17

Copyright ASME International
Provided by IHS under license with ASME
No reproduction or networking permitted without license from IHS
Not for Resale

TABLE A2 CONVERSION TABLE FROM INCH TO MILLIMETER FOR DECIMAL INCH VALUES LESS THAN 1 (DO NOT INTERPOLATE) (CONT'D)

in.	0.xx0	0.xx1	0.xx2	0.xx3	0.xx4	0.xx5	0.xx6	0.xx7	0.xx8	0.xx9
0.48	12.19	12.22	12.24	12.27	12.29	12.32	12.34	12.37	12.40	12.42
0.49	12.45	12.47	12.50	12.52	12.55	12.57	12.60	12.62	12.65	12.67
0.50	12.70	12.73	12.75	12.78	12.80	12.83	12.85	12.88	12.90	12.93
0.51	12.95	12.98	13.00	13.03	13.06	13.08	13.11	13.14	13.16	13.18
0.52	13.21	13.23	13.26	13.28	13.31	13.34	13.36	13.39	13.41	13.44
0.53	13.46	13.49	13.51	13.54	13.56	13.59	13.61	13.64	13.67	13.69
0.54	13.71	13.74	13.77	13.79	13.82	13.84	13.87	13.89	13.92	13.94
0.55	13.97	14.00	14.02	14.05	14.07	14.10	14.12	14.15	14.17	14.20
0.56	14.22	14.25	14.27	14.30	14.33	14.35	14.38	14.40	14.43	14.45
0.57	14.48	14.50	14.53	14.55	14.58	14.60	14.63	14.66	14.68	14.71
0.58	14.73	14.76	14.78	14.81	14.83	14.86	14.88	14.91	14.94	14.96
0.59	14.99	15.01	15.04	15.06	15.09	15.11	15.14	15.16	15.19	15.21
0.60	15.24	15.27	15.29	15.32	15.34	15.37	15.39	15.42	15.44	15.47
0.61	15.49	15.52	15.54	15.57	15.60	15.62	15.65	15.67	15.70	15.72
0.62	15.75	15.77	15.80	15.82	15.85	15.88	15.90	15.93	15.95	15.98
0.63	16.00	16.02	16.05	16.08	16.10	16.13	16.15	16.18	16.21	16.23
0.64	16.26	16.28	16.31	16.33	16.36	16.38	16.41	16.43	16.46	16.48
0.65	16.51	16.54	16.56	16.59	16.61	16.64	16.66	16.69	16.71	16.74
0.66	16.76	16.79	16.81	16.84	16.87	16.89	16.92	16.94	16.97	16.99
0.67	17.02	17.04	17.07	17.09	17.12	17.14	17.17	17.20	17.22	17.25
0.68	17.27	17.30	17.32	17.35	17.37	17.40	17.42	17.45	17.48	17.50
0.69	17.53	17.55	17.58	17.60	17.63	17.65	17.68	17.70	17.73	17.75
0.70	17.78	17.81	17.83	17.86	17.88	17.91	17.93	17.96	17.98	18.01
0.71	18.03	18.06	18.08	18.11	18.14	18.16	18.19	18.21	18.24	18.26
0.72	18.29	18.31	18.34	18.36	18.39	18.42	18.44	18.47	18.49	18.52
0.73	18.54	18.57	18.59	18.62	18.64	18.67	18.69	18.72	18.75	18.77
0.74	18.80	18.82	18.85	18.87	18.90	18.92	18.95	18.97	19.00	19.02
0.75	19.05	19.08	19.10	19.13	19.15	19.18	19.20	19.23	19.25	19.28
0.76	19.30	19.33	19.35	19.38	19.41	19.43	19.46	19.48	19.51	19.53
0.77	19.56	19.58	19.61	19.63	19.66	19.68	19.71	19.74	19.76	19.79
0.78	19.81	19.84	19.86	19.89	19.91	19.94	19.96	19.99	20.02	20.04
0.79	20.07	20.09	20.12	20.14	20.17	20.19	20.22	20.24	20.27	20.29
0.80	20.32	20.35	20.37	20.40	20.42	20.45	20.47	20.50	20.52	20.55
0.81	20.57	20.60	20.62	20.65	20.68	20.70	20.73	20.75	20.78	20.80
0.82	20.83	20.85	20.88	20.90	20.93	20.96	20.98	21.01	21.03	21.06
0.83	21.08	21.11	21.13	21.16	21.18	21.21	21.23	21.26	21.29	21.31
0.84	21.34	21.36	21.39	21.42	21.44	21.46	21.49	21.51	21.54	21.56
0.85	21.59	21.62	21.64	21.67	21.29	21.72	21.74	21.77	21.79	21.82
0.86	21.84	21.87	21.89	21.92	21.95	21.97	22.00	22.02	22.05	22.07
0.87	22.10	22.12	22.15	22.17	22.20	22.22	22.25	22.28	22.30	22.33
0.88	22.35	22.38	22.40	22.43	22.45	22.48	22.50	22.53	22.56	22.58
0.89	22.61	22.63	22.66	22.68	22.71	22.73	22.76	22.78	22.81	22.83
0.90	22.86	22.89	22.91	22.94	22.96	22.99	23.01	23.04	23.06	23.09
0.91	23.11	23.14	23.16	23.19	23.22	23.24	23.27	23.29	23.32	23.34
0.92	23.37	23.39	23.42	23.44	23.47	23.50	23.52	23.55	23.57	23.60
0.93	23.62	23.65	23.67	23.70	23.72	23.75	23.77	23.80	23.83	23.85
0.94	23.88	23.90	23.93	23.95	23.98	24.00	24.03	24.05	24.08	24.10
0.95	24.13	24.16	24.18	24.21	24.23	24.26	24.28	24.31	24.33	24.36
0.96	24.38	24.42	24.43	24.46	24.49	24.51	24.54	24.56	24.59	24.61
0.97	24.64	24.66	24.69	24.71	24.74	24.76	24.79	24.82	24.84	24.87
0.98	24.89	24.92	24.94	24.97	24.99	25.02	25.04	25.07	25.10	25.12
0.99	25.15	25.17	25.20	25.22	25.25	25.27	25.30	25.32	25.35	25.37

Copyright ASME International
Provided by IHS under license with ASME
No reproduction or networking permitted without license from IHS
Not for Resale

AMERICAN NATIONAL STANDARDS FOR CUTTING TOOLS

Reamers B94.2-1995
Straight Cut-Off Blades for Lathes and Screw Machines ..... B94.3-1965(R1995)
Knurling ..... B94.6-1984(R1995)
Hobs B94.7-1980 (R1995)
Inserted Blade Milling Cutter Bodies ..... B94.8-1967(R1987)
Taps — Cut and Ground Threads B94.9-1987
Twist Drills B94.11M-1993
Punches — Basic Head Type ..... B94.14-1968(R1995)
Punches — Basic Head Type (Metric) ..... B94.14.1-1977(R1995)
Retainers — Basic Ball-Lock, Punch and Die Button, Light and Heavy Duty ..... B94.16-1987(R1995)
Retainers — Basic Ball-Lock, Punch and Die Button, Light and Heavy Duty (Metric) ..... B94.16.1-1978(R1995)
Gages — Functional, Ball-Lock Punches, Die Buttons, and Retainers ..... B94.17-1987(R1995)
Gages — Functional, Ball-Lock Punches, Die Buttons, and Retainers (Metric) ..... B94.17.1-1977(R1995)
Punches — Basic Ball-Lock Light and Heavy Duty ..... B94.18-1987(R1995)
Punches — Basic Ball-Lock Light and Heavy Duty (Metric) ..... B94.18.1-1977(R1995)
Milling Cutters and End Mills B94.19-1997
Gear Shaper Cutters ..... B94.21-1968(R1995)
Punches — Variable, Head Type ..... B94.22-1968(R1995)
Punches — Variable, Head Type (Metric) ..... B94.22.1-1977(R1995)
Punch Guide Bushings — Variable, Press Fit ..... B94.23-1969(R1995)
Die Buttons — Basic Taper Relief, Press Fit ..... B94.27-1970(R1995)
Die Buttons — Basic Taper Relief, Press Fit (Metric) ..... B94.27.1M-1983(R1995)
Die Buttons — Basic Straight Relief, Press Fit ..... B94.28-1970(R1995)
Die Buttons — Basic Straight Relief, Press Fit (Metric) ..... B94.28.1M-1984(R1995)
Die Buttons — Basic Ball-Lock ..... B94.29-1970(R1995)
Die Buttons — Basic Ball-Lock (Metric) ..... B94.29.1-1977(R1995)
Die Buttons — Variable, Press Fit ..... B94.30-1970(R1995)
Steel Rotary Slitting Knives and Steel Spacing Collars ..... B94.31-1981(R1995)
Jig Bushings B94.33-1996
Drill Drivers, Split-Sleeve, Collet Type ..... B94.35-1972(R1995)
Roller Turner Type Cutting Tools, Single-Point ..... B94.37M-1979(R1985)
Punches — Variable, Angle Head Type and Related Quill Bushings ..... B94.38-1972(R1995)
Punches — Basic, Combination Angle Head Type and Related Quill Bushings ..... B94.39-1972(R1995)
Punches — Wire Type ..... B94.40-1972(R1995)
Punches — Basic, Angle Head Type and Related Quill Bushings ..... B94.41-1972(R1995)
Die Buttons — Variable, Press Fit, Headless and Head Type, Step Relief ..... B94.43-1972(R1995)
Punches — Basic, Cylindrical Head Type and Related Quill Bushings ..... B94.44-1972(R1995)
Spade Drill Blades and Spade Drill Holders ..... B94.49-1975(R1995)
Basic Nomenclature and Definitions for Single-Point Cutting Tools ..... B94.50-1975(R1995)
Specifications for Band Saw Blades (Metal Cutting) B94.51M-1994
Specifications for Hacksaw Blades B94.52M-1994
Solid Steel Rectangular Metal Cutting Squaring Shear Knives — Dimensional Tolerances ..... B94.53-1978(R1984)
Specifications for Hole Saws, Hole Saw Arbors, and Hole Saw Accessories B94.54-1994
Tool Life Testing with Single-Point Turning Tools ..... B94.55M-1985(R1995)
Gages — Functional, Ball-Lock Punches, Inch B94.56-1995
Gages — Functional, Ball-Lock Punches, Metric B94.56.1M-1995

The ASME Publications Catalog shows a complete list of all the Standards published by the Society. For a complimentary catalog, or the latest information about our publications, call 1-800-THE-ASME (1-800-843-2763).

Copyright ASME International
Provided by IHS under license with ASME
No reproduction or networking permitted without license from IHS
Not for Resale

ASME Services

ASME is committed to developing and delivering technical information. At ASME's Information Central, we make every effort to answer your questions and expedite your orders. Our representatives are ready to assist you in the following areas:

ASME Press
Codes & Standards
Credit Card Orders
IMechE Publications
Meetings & Conferences
Member Dues Status
Member Services & Benefits
Other ASME Programs
Payment Inquiries
Professional Development
Short Courses
Publications
Public Information
Self-Study Courses
Shipping Information
Subscriptions/Journals/Magazines
Symposia Volumes
Technical Papers

How can you reach us? It's easier than ever!

There are four options for making inquiries* or placing orders. Simply mail, phone, fax, or E-mail us and an Information Central representative will handle your request.

Mail	*Call Toll Free*	*Fax-24 hours*	*E-Mail-24 hours*
ASME	**US & Canada:** 800-THE-ASME	973-882-1717	Infocentral
22 Law Drive, Box 2900	(800-843-2763)	973-882-5155	@asme.org
Fairfield, New Jersey	**Mexico:** 95-800-THE-ASME		
07007-2900	(95-800-843-2763)		
	Universal: 973-882-1167		

* Information Central staff are not permitted to answer inquiries about the technical content of this code or standard. Information as to whether or not technical inquiries are issued to this code or standard is shown on the copyright page. All technical inquiries must be submitted in writing to the staff secretary. Additional procedures for inquiries may be listed within.

Copyright ASME International
Provided by IHS under license with ASME
No reproduction or networking permitted without license from IHS
Not for Resale