ASME B94.11M 93 ■ 0759670 0540650 135 ■

ASME B94.11M-1993

(REVISION OF ANSI B94.11-1979)

Twist Drills

AN AMERICAN NATIONAL STANDARD

The American Society of Mechanical Engineers

Copyright ASME International
Provided by IHS under license with ASME
No reproduction or networking permitted without license from IHS

Not for Resale

AN AMERICAN NATIONAL STANDARD

Twist Drills

ASME B94.11M-1993

(REVISION OF ANSI B94.11-1979)

The American Society of
Mechanical Engineers

345 East 47th Street, New York, N.Y. 10017

Copyright ASME International
Provided by IHS under license with ASME
No reproduction or networking permitted without license from IHS

Not for Resale

Date of Issuance: March 31, 1994

This Standard will be revised when the Society approves the issuance of a new edition. There will be no addenda or written interpretations of the requirements of this Standard issued to this Edition.

ASME is the registered trademark of The American Society of Mechanical Engineers.

This code or standard was developed under procedures accredited as meeting the criteria for American National Standards. The Consensus Committee that approved the code or standard was balanced to assure that individuals from competent and concerned interests have had an opportunity to participate. The proposed code or standard was made available for public review and comment which provides an opportunity for additional public input from industry, academia, regulatory agencies, and the public-at-large.

ASME does not "approve," "rate," or "endorse" any item, construction, proprietary device, or activity.

ASME does not take any position with respect to the validity of any patent rights asserted in connection with any items mentioned in this document, and does not undertake to insure anyone utilizing a standard against liability for infringement of any applicable Letters Patent, nor assume any such liability. Users of a code or standard are expressly advised that determination of the validity of any such patent rights, and the risk of infringement of such rights, is entirely their own responsibility.

Participation by federal agency representative(s) or person(s) affiliated with industry is not to be interpreted as government or industry endorsement of this code or standard.

ASME accepts responsibility for only those interpretations issued in accordance with governing ASME procedures and policies which preclude the issuance of interpretations by individual volunteers.

No part of this document may be reproduced in any form,
in an electronic retrieval system or otherwise,
without the prior written permission of the publisher.

Copyright © 1994 by
THE AMERICAN SOCIETY OF MECHANICAL ENGINEERS
All Rights Reserved
Printed in U.S.A.

Copyright ASME International
Provided by IHS under license with ASME
No reproduction or networking permitted without license from IHS

Not for Resale

FOREWORD

(This Foreword is not a part of ASME B94.11M-1993.)

The U.S.A. Standard Twist Drills-Straight Shank (USASI B5-12-1940) Standardized Drill Nomenclature and Major Dimensions, Technical Committee No. 7 on Twist Drills was established in 1946 and a revision dated March 22, 1950 was issued.

The committee was reactivated in 1956 and a revision dated December 15, 1958 was issued.

The committee was again reactivated in 1964 and a redesignated USAS B94.11-1967 was issued on May 4, 1967.

The above standard was reaffirmed in 1972 as ANSI B94.11-1967 (R1972).

Technical Committee No. 7 was again reactivated in March 1978 for the purpose of reviewing ANSI B94.11-1967 (R1972) and considered a proposed Inch and Metric Standard submitted by the Metal Cutting Tool Institute and industry that reflects current U.S. drill usage. The proposal added metric sizes in jobbers series, screw machine series, taper length series, and taper shank series that were reflective of current industry practices and usage patterns. Metric sizes were not included for core drills, and combined drills and countersinks. In addition the entire standard was dual-dimensioned because of the metric additions. The suggestions were reviewed and a draft was approved by the Technical Committee on November 15, 1978 for submission to sectional committee B94 and sponsor organizations of ANSI. The revision was approved by the American National Standards Institute on August 29, 1979 and redesignated ANSI B94.11M-1979.

Following the resignation and retirement of all but one of the members of the Technical Committee No. 7, new members were recruited so that revisions suggested by members of the United States Cutting Tool Institute could be considered. A draft of the results of the committee's deliberations was approved by the commitee on February 28, 1991. In addition to dealing with the USCTI suggestions, the committee also corrected many numerical and editorial errors. Other changes, designed to make this document easier to use, were also recommended. The recommended revision was approved by the American National Standards Institute on September 29, 1993 and was redesignated ASME B94.11M-1993.

Copyright ASME International
Provided by IHS under license with ASME
No reproduction or networking permitted without license from IHS
Not for Resale

ASME STANDARDS COMMITTEE B94
Standardization of Cutting Tools, Holders, Drivers and Bushings

(The following is the roster of the Committee at the time of approval of this Standard.)

OFFICERS

E. J. Czopor, *Chairman*
E. W. McLaren, *Secretary*

COMMITTEE PERSONNEL

E. J. Czopor, E & S Sales, Inc., Bloomfield Hills, Michigan
M. E. Merchant, Metcut Res Associates, Inc., Cincinnati, Ohio
C. W. Preuss, Kingsford Broach and Tool, Inc., Westlake, Ohio
J. R. Strolberg, Rockton, Illinois
A. M. Bratkovich, *Alternate*, NMTBA, McLean, Virginia

TECHNICAL COMMITTEE 7—TWIST DRILLS

C. T. Wax, *Chairman*, Scully-Jones Corp., Chicago, Illinois
P. Field, Michigan Drill Co., Miami, Florida
R. C. Gulbrandsen, Precision Twist Drill Co., Crystal Lake, Illinois
M. N. Jarvis II, Jarvis Cutting Tools, Inc., Rochester, New Hampshire
D. L. Lewis, Kennametal, Inc., Raleigh, North Carolina
R. E. Moring, Greenfield Industries, Augusta, Georgia
C. W. Preuss, Kingsford Broach and Tool, Inc., Westlake, Ohio
D. E. Sisler, Caterpillar, Inc., Aurora, Illinois

Copyright ASME International
Provided by IHS under license with ASME
No reproduction or networking permitted without license from IHS
Not for Resale

CONTENTS

Foreword iii
Standards Committee Roster v

1 Scope 1
2 Twist Drills
2.1 Nomenclature and Definitions 1
2.2 Classifications 3
3 Combined Drills and Countersinks
3.1 Nomenclature and Definitions 3
3.2 Applicable Twist Drill Terms 6

Figures
1 Identity of Twist Drill Features 2
2 Identity of Core Drill Features 4
3 Identity of Combined Drill and Countersink Features 5
4 Dimensions of Fractional Size Twist Drills — High Speed Steel (Silver and Deming Style) 49

Tables
1 General Dimensions of Straight Shank Twist Drills — Jobbers Length 7
2 General Dimensions of Straight Shank Twist Drills — Taper Length
A. Through 1/2 in. (12.7 mm) Dia. 16
B. Over 1/2 in. (12.7 mm) Dia. 21
3 General Dimensions of Straight Shank Twist Drills — Screw Machine Length
A. Through 1 in. (25.4 mm) Dia. 25
B. Over 1 in. (25.4 mm) Dia. 33
4 General Dimensions of Tangs for Straight Shank Twist Drills 34
5 General Dimensions of Taper Shank Twist Drills 35
6 Specifications and Definitions for Split Point Drill Grinding 48
7 General Dimensions of Three and Four Flute Straight Shank Core Drills 50
8 General Dimensions of Three and Four Flute Taper Shank Core Drills 52
9 A. General Dimensions of Combined Drills and Countersinks (Plain and Bell Types) 54
B. Tolerances of Combined Drills and Countersinks 55
10 Element Tolerances for High Speed Steel General Purpose Twist Drills 56

Copyright ASME International
Provided by IHS under license with ASME
No reproduction or networking permitted without license from IHS
Not for Resale

TWIST DRILLS
(Straight Shank and Taper Shank Combined Drills and Countersinks)

1 SCOPE

This Standard covers nomenclature, definitions, sizes and tolerances of High Speed Steel, Straight and Taper Shank Drills, and Combined Drills and Countersinks, Plain and Bell Type. It covers both inch and metric size drills.

2 TWIST DRILLS

2.1 Nomenclature and Definitions

axis — the imaginary straight line which forms the longitudinal center line of the drill

back taper — a slight decrease in diameter from point to back in the body of the drill

body — the portion of the drill extending from the shank or neck to the outer corners of the cutting lips

body diameter clearance — that portion of the land that has been cut away so it will not rub againt the walls of the hole

chisel edge — the edge at the end of the web that connects the cutting lips

chisel edge angle — the angle included between the chisel edge and the cutting lip as viewed from the end of the drill

clearance diameter — the diameter over the cut-away portion of the drill lands

drill diameter — the diameter over the margins of the drill measured at the point

flutes — helical or straight grooves cut or formed in the body of the drill to provide cutting lips, to permit removal of chips, and to allow cutting fluid to reach the cutting lips

flute length — the length from the outer corners of the cutting lip to the extreme back end of the flutes. It includes the sweep of the tool used to generate the flutes and, therefore, does not indicate the useable length of the flutes.

helix angle — the angle made by the leading edge of the land with a plane containing the axis of the drill

land — the peripheral portion of the drill body between adjacent flutes

land width — the distance between the leading edge and the heel of the land measured at a right angle to the leading edge

lips

(*a*) *two-flute drill* — the cutting edges extending from the chisel edge to the periphery

(*b*) *three- or four-flute drill* (*core drill*) — the cutting edges extending from the bottom of the chamfer to the periphery

lip relief — the axial relief on the drill point

lip relief angle — the axial relief angle at the outer corner of the lip. It is measured across the margin portion of the land.

margin — the cylindrical portion of the land which is not cut away to provide clearance

neck — the section of reduced diameter between the body and the shank of a drill

overall length — the length from the extreme end of the shank to the outer corners of the cutting lips. It does not include the conical shank end often used on straight shank drills, nor does it include the conical cutting point used on both straight and taper shank drills. (For core drills with an external center on the cutting end, same as for two flute drills. For core drills with internal centers on the cutting end, the overall length is to the extreme ends of the tool.)

point — the cutting end of a drill, made up of the ends of the lands, the web, and the lips. In form, it resembles a cone, but departs from a true cone to furnish clearance behind the cutting lips.

point angle — the angle included between the lips projected upon a plane parallel to the drill axis and parallel to the cutting lips

Copyright ASME International
Provided by IHS under license with ASME
No reproduction or networking permitted without license from IHS
Not for Resale

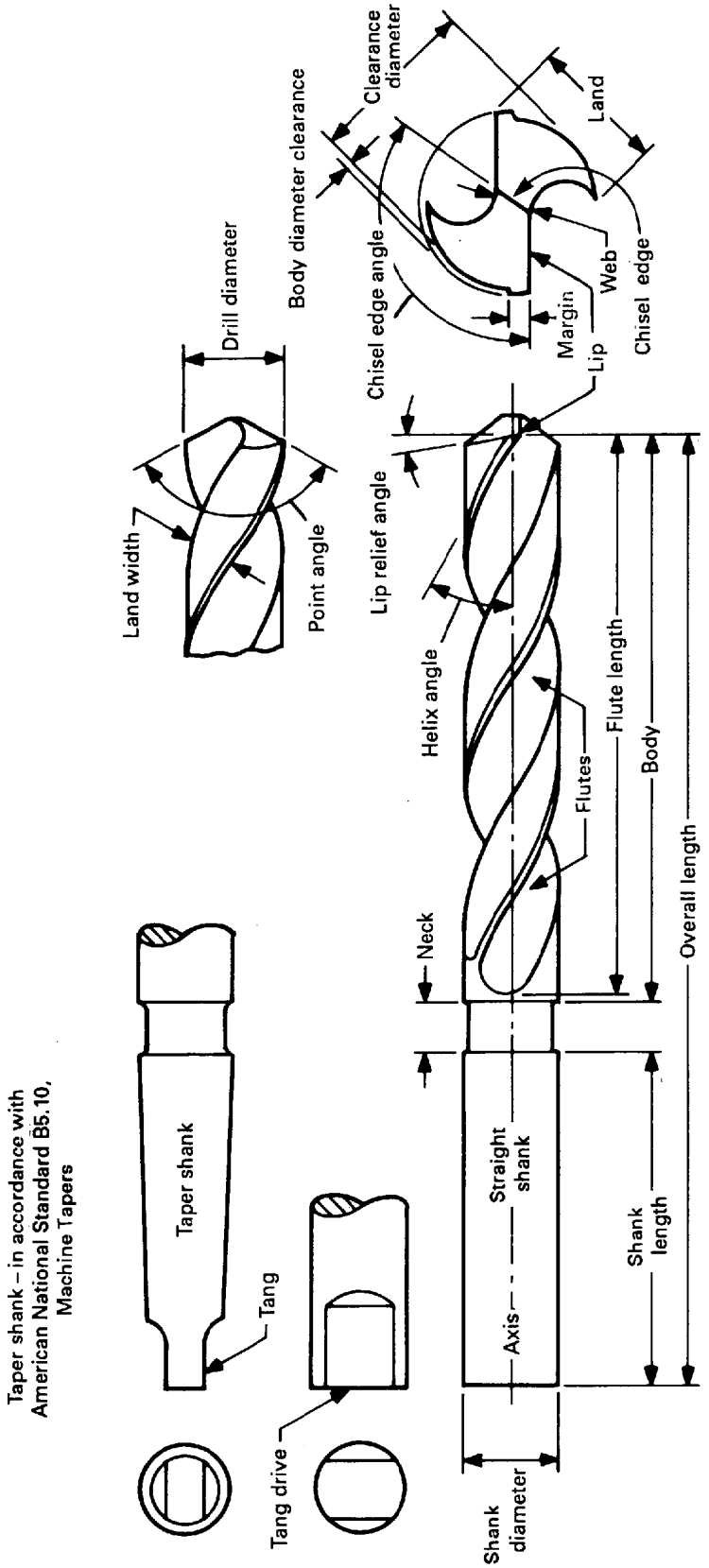

FIG. 1 IDENTITY OF TWIST DRILL FEATURES

Not for Resale

Copyright ASME International
Provided by IHS under license with ASME
No reproduction or networking permitted without license from IHS

shank — the part of the drill by which it is held and driven

tang — the flattened end of a taper shank, intended to fit into a slot in the socket

tang drive — two opposite parallel driving flats on the extreme end of a straight shank

twist drill — a rotary end cutting tool having one or more cutting lips and having one or more helical or straight flutes for the passage of chips and the admission of a cutting fluid

web — the central portion of the body that joins the lands. The extreme end of the web forms the chisel edge on a two-flute drill.

web thickness — the thickness of the web at the point unless another specific location is indicated

web thinning — the operation of reducing the web thickness at the point to reduce drilling thrust

2.2 Classifications

2.2.1 Based on Kind of Shank

straight shank drills — those having cylindrical shanks which may be the same or different diameter than the body of the drill. The shank may be with or without driving flats, tang, grooves or threads.

taper shank drills — those having conical shanks suitable for direct fitting into tapered holes in machine spindles, driving sleeves, or sockets. Tapered shanks generally have a tang, which is used with a drift bar to eject the drill from its mating socket.

2.2.2 Based on Number of Flutes

two-flute drills — the conventional type of drill used for originating holes

three-flute drills (*core drills*) — drills commonly used for enlarging and finishing drilled, cast or punched holes. They will not produce original holes.

four-flute drills (*core drills*) — used interchangeably with three-flute drills. They are of similar construction except for the number of flutes.

2.2.3 Based on Hand of Cut

right-hand cut — when viewed from the cutting point, the counterclockwise rotation of a drill in order to cut

left-hand cut — when viewed from the cutting point, the clockwise rotation of a drill in order to cut

3 COMBINED DRILLS AND COUNTERSINKS

3.1 Nomenclature and Definitions

These definitions are applicable to Tables 9 and 10.

axis — the imaginary straight line which forms the longitudinal center line of the combined drill and countersink.

back taper — a slight decrease in diameter from the front to back in the drill length

bell angle — the included angle of the secondary conical section providing clearance or protection for the countersink angle conical surface (it is normally 120 deg.)

bell diameter — the diameter at the intersection of the countersink portion and the bell portion at the leading edge of the land

body — the central portion of the body by which it is held or driven

combined drill and countersink — single or double-end cutting tool, having helical or straight flutes, and having a drill portion and an adjacent integral countersink portion, primarily used to produce center holes in work that will be held between machine centers

countersink angle — the included angle of the countersink portion (it is normally 60 deg.)

countersink relief angle — the angle between a plane at right angles to the axis of the tool, and a line tangent to the surface of the countersink portion at the intersection of the countersink portion and the body and at the leading edge of the land. For the bell type, the relief angle is measured at the intersection of the bell portion and the body.

countersink portion — that part of the tool which produces a conical bearing surface for the work centers. The bell type produces an additional secondary conical section to provide clearance or protection for the bearing surface.

drill diameter — the diameter of the drill portion measured across the outer corners of the cutting lips

drill diameter relief — the relief provided on the land of the drill portion to reduce contact with the walls of the hole. It is generally of an eccentric form.

drill length — the length of the drill portion from the outer corners of the cutting lips to its intersection with the countersink portion

drill portion — that part of the tool extending beyond

Copyright ASME International
Provided by IHS under license with ASME
No reproduction or networking permitted without license from IHS
Not for Resale

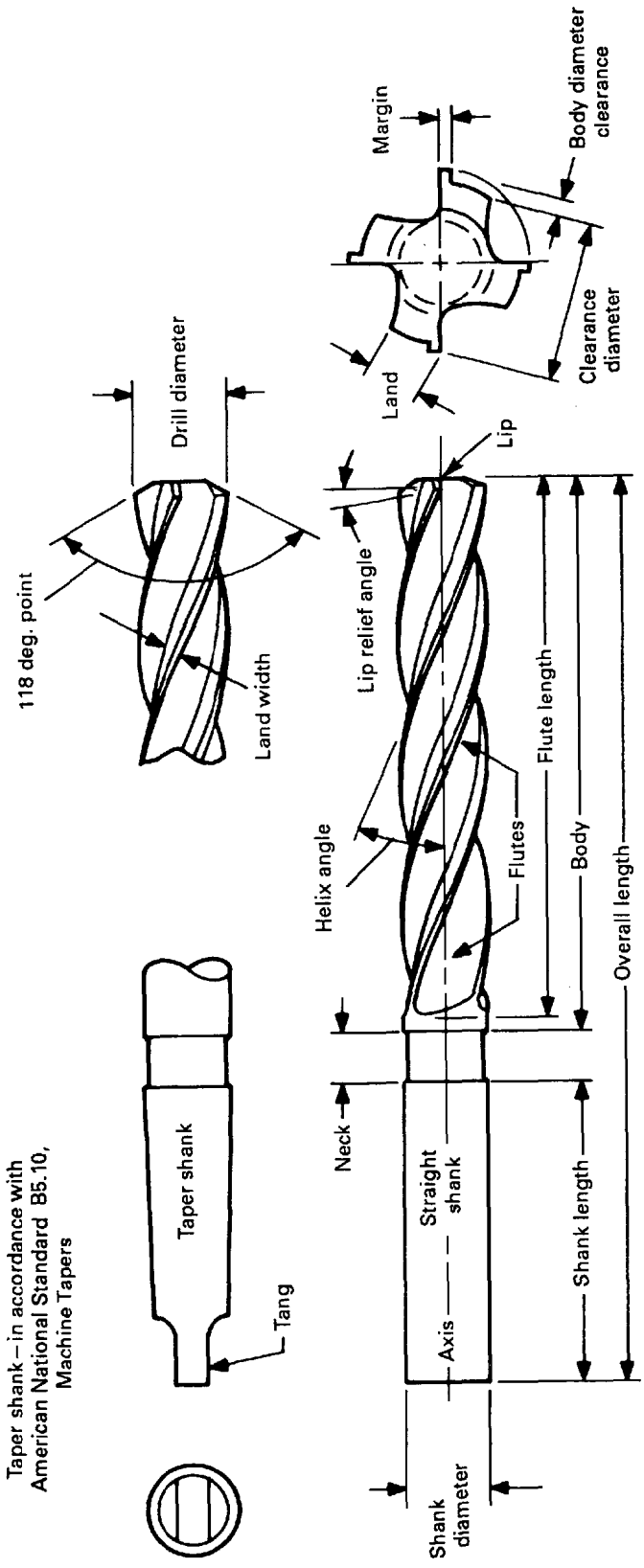

FIG. 2 IDENTITY OF CORE DRILL FEATURES

Not for Resale

Copyright ASME International
Provided by IHS under license with ASME
No reproduction or networking permitted without license from IHS

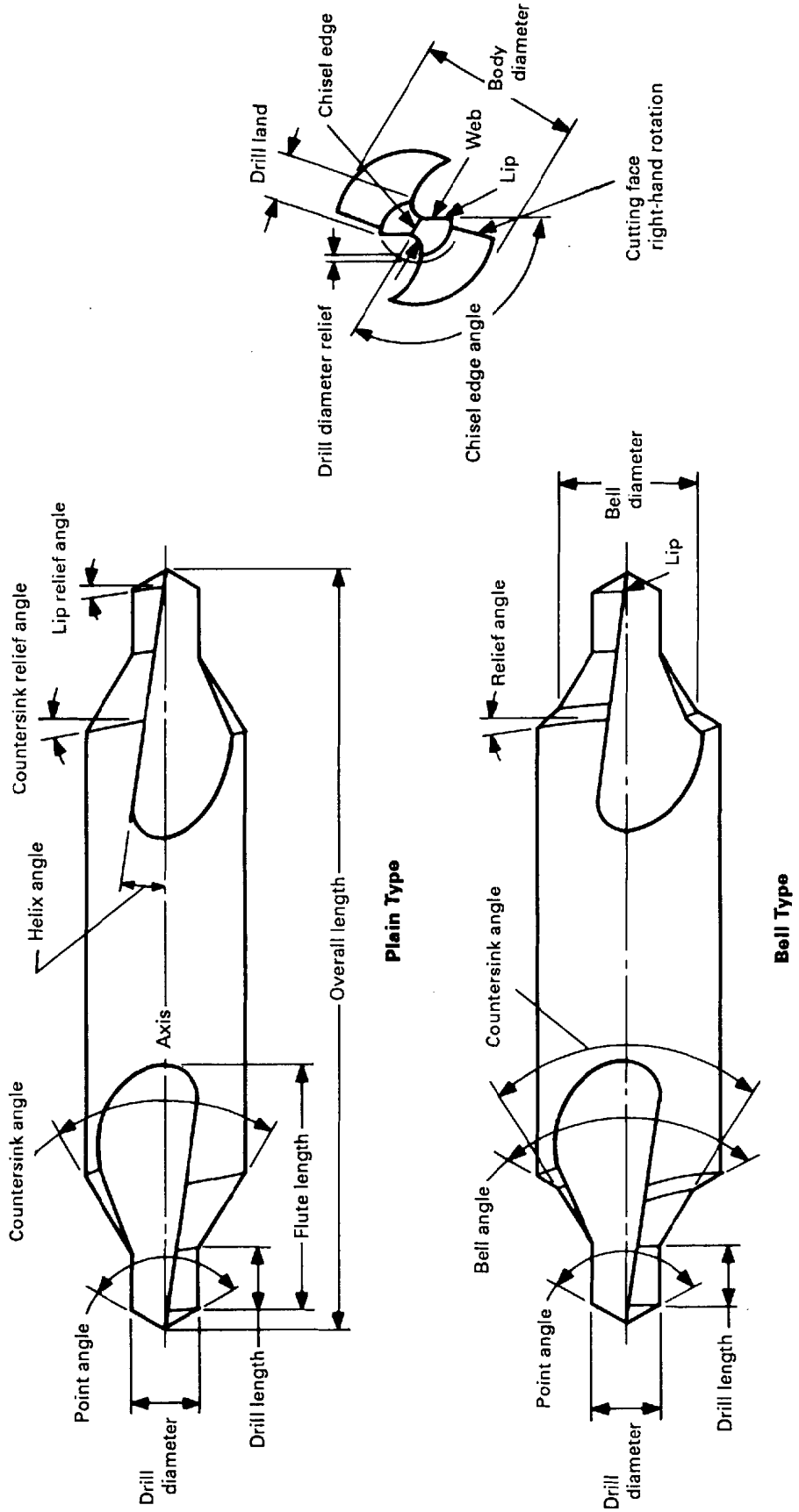

FIG. 3 IDENTITY OF COMBINED DRILL AND COUNTERSINK FEATURES

Copyright ASME International
Provided by IHS under license with ASME
No reproduction or networking permitted without license from IHS

Not for Resale

the countersink portion to produce clearance for the point of a conical center

flutes — the helical or straight grooves cut or formed in the cutting portions and the body to provide cutting edges on both the drill and countersink portions, to permit removal of chips and to allow cutting fluid to reach the cutting lips

flute length — the length from the outer corners of the cutting lips to the extreme ends of the flutes. It includes the sweep of the tool used to generate the flutes and, therefore, does not indicate the usable length of flutes.

land — the peripheral drill and countersink portions between the adjacent flutes

overall length — the length between the extreme points of the tools

3.2 Applicable Twist Drill Terms

For definitions, see para. 2.1.

chisel edge
chisel edge angle
helix angle
lips
lip relief
lip relief angle
point angle
web
web thickness

Copyright ASME International
Provided by IHS under license with ASME
No reproduction or networking permitted without license from IHS
Not for Resale

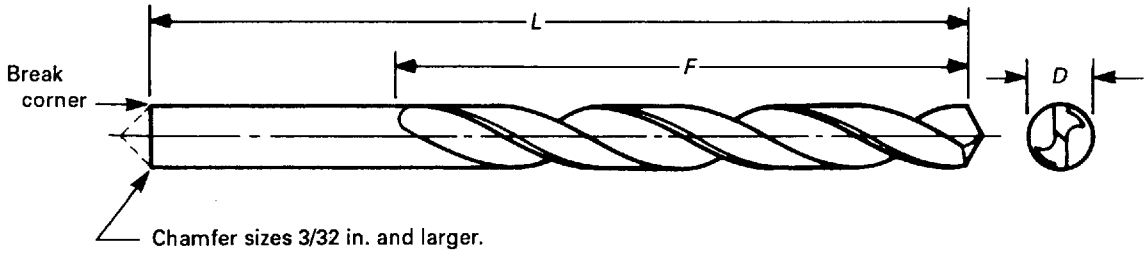

Chamfer sizes 3/32 in. and larger. For sizes under 3/32 in. a chamfer or conical point may be used at the manufacturer's option.

See Table 10 for tolerances

TABLE 1 GENERAL DIMENSIONS OF STRAIGHT SHANK TWIST DRILLS — JOBBERS LENGTH — FRACTIONAL, NUMBER, LETTER AND METRIC SIZES

Diameter of Drill						Flute Length		Overall Length	
D				Decimal Inch Equivalent	Millimeter Equivalent	F		L	
Fraction	No.	Ltr.	Millimeter			Inch	mm	Inch	mm
	97		0.15	0.0059	0.150	1/16	1.6	3/4	19
	96		0.16	0.0063	0.160	1/16	1.6	3/4	19
	95		0.17	0.0067	0.170	1/16	1.6	3/4	19
	94		0.18	0.0071	0.180	1/16	1.6	3/4	19
	93		0.19	0.0075	0.190	1/16	1.6	3/4	19
	92		0.20	0.0079	0.201	1/16	1.6	3/4	19
	91			0.0083	0.211	5/64	2.0	3/4	19
	90		0.22	0.0087	0.221	5/64	2.0	3/4	19
	89			0.0091	0.231	5/64	2.0	3/4	19
	88			0.0095	0.241	5/64	2.0	3/4	19
			0.25	0.0098	0.250	5/64	2.0	3/4	19
	87			0.0100	0.254	5/64	2.0	3/4	19
	86			0.0105	0.267	3/32	2.4	3/4	19
	85		0.28	0.0110	0.280	3/32	2.4	3/4	19
	84			0.0115	0.292	3/32	2.4	3/4	19
			0.30	0.0118	0.300	3/32	2.4	3/4	19
	83			0.0120	0.305	3/32	2.4	3/4	19
	82			0.0125	0.318	3/32	2.4	3/4	19
			0.32	0.0126	0.320	3/32	2.4	3/4	19
	81			0.0130	0.330	3/32	2.4	3/4	19
	80			0.0135	0.343	1/8	3	3/4	19
			0.35	0.0138	0.350	1/8	3	3/4	19
	79			0.0145	0.368	1/8	3	3/4	19
			0.38	0.0150	0.380	3/16	5	3/4	19
1/64				0.0156	0.396	3/16	5	3/4	19
			0.40	0.0157	0.400	3/16	5	3/4	19
	78			0.0160	0.406	3/16	5	7/8	22
			0.42	0.0165	0.420	3/16	5	7/8	22
			0.45	0.0177	0.450	3/16	5	7/8	22
	77			0.0180	0.457	3/16	5	7/8	22

Copyright ASME International
Provided by IHS under license with ASME
No reproduction or networking permitted without license from IHS
Not for Resale

TABLE 1 GENERAL DIMENSIONS OF STRAIGHT SHANK TWIST DRILLS — JOBBERS LENGTH — FRACTIONAL, NUMBER, LETTER AND METRIC SIZES (CONT'D)

Diameter of Drill						Flute Length		Overall Length	
D				Decimal Inch Equivalent	Millimeter Equivalent	*F*		*L*	
Fraction	No.	Ltr.	Millimeter			Inch	mm	Inch	mm
			0.48	0.0189	0.480	3/16	5	7/8	22
			0.50	0.0197	0.500	3/16	5	7/8	22
	76			0.0200	0.508	3/16	5	7/8	22
	75			0.0210	0.533	1/4	6	1	25
			0.55	0.0217	0.550	1/4	6	1	25
	74			0.0225	0.572	1/4	6	1	25
			0.60	0.0236	0.600	5/16	8	1 1/8	29
	73			0.0240	0.610	5/16	8	1 1/8	29
	72			0.0250	0.635	5/16	8	1 1/8	29
			0.65	0.0256	0.650	3/8	10	1 1/4	32
	71			0.0260	0.660	3/8	10	1 1/4	32
			0.70	0.0276	0.700	3/8	10	1 1/4	32
	70			0.0280	0.711	3/8	10	1 1/4	32
	69			0.0292	0.742	1/2	13	1 3/8	35
			0.75	0.0295	0.750	1/2	13	1 3/8	35
	68			0.0310	0.787	1/2	13	1 3/8	35
1/32				0.0312	0.792	1/2	13	1 3/8	35
			0.80	0.0315	0.800	1/2	13	1 3/8	35
	67			0.0320	0.813	1/2	13	1 3/8	35
	66			0.0330	0.838	1/2	13	1 3/8	35
			0.85	0.0335	0.850	5/8	16	1 1/2	38
	65			0.0350	0.889	5/8	16	1 1/2	38
			0.90	0.0354	0.899	5/8	16	1 1/2	38
	64			0.0360	0.914	5/8	16	1 1/2	38
	63			0.0370	0.940	5/8	16	1 1/2	38
			0.95	0.0374	0.950	5/8	16	1 1/2	38
	62			0.0380	0.965	5/8	16	1 1/2	38
	61			0.0390	0.991	11/16	17	1 5/8	41
			1.00	0.0394	1.000	11/16	17	1 5/8	41
	60			0.0400	1.016	11/16	17	1 5/8	41
	59			0.0410	1.041	11/16	17	1 5/8	41
			1.05	0.0413	1.050	11/16	17	1 5/8	41
	58			0.0420	1.067	11/16	17	1 5/8	41
	57			0.0430	1.092	3/4	19	1 3/4	44
			1.10	0.0433	1.100	3/4	19	1 3/4	44
			1.15	0.0453	1.150	3/4	19	1 3/4	44
	56			0.0465	1.181	3/4	19	1 3/4	44
3/64				0.0469	1.191	3/4	19	1 3/4	44
			1.20	0.0472	1.200	7/8	22	1 7/8	48
			1.25	0.0492	1.250	7/8	22	1 7/8	48

Copyright ASME International
Provided by IHS under license with ASME
No reproduction or networking permitted without license from IHS
Not for Resale

TABLE 1 GENERAL DIMENSIONS OF STRAIGHT SHANK TWIST DRILLS — JOBBERS LENGTH — FRACTIONAL, NUMBER, LETTER AND METRIC SIZES (CONT'D)

Diameter of Drill						Flute Length		Overall Length	
D				Decimal Inch Equivalent	Millimeter Equivalent	*F*		*L*	
Fraction	No.	Ltr.	Millimeter			Inch	mm	Inch	mm
			1.30	0.0512	1.300	7/8	22	1 7/8	48
	55			0.0520	1.321	7/8	22	1 7/8	48
			1.35	0.0531	1.350	7/8	22	1 7/8	48
	54			0.0550	1.397	7/8	22	1 7/8	48
			1.40	0.0551	1.400	7/8	22	1 7/8	48
			1.45	0.0571	1.450	7/8	22	1 7/8	48
			1.50	0.0591	1.500	7/8	22	1 7/8	48
	53			0.0595	1.511	7/8	22	1 7/8	48
			1.55	0.0610	1.550	7/8	22	1 7/8	48
1/16				0.0625	1.588	7/8	22	1 7/8	48
			1.60	0.0630	1.600	7/8	22	1 7/8	48
	52			0.0635	1.613	7/8	22	1 7/8	48
			1.65	0.0650	1.650	1	25	2	51
			1.70	0.0669	1.700	1	25	2	51
	51			0.0670	1.702	1	25	2	51
			1.75	0.0689	1.750	1	25	2	51
	50			0.0700	1.778	1	25	2	51
			1.80	0.0709	1.800	1	25	2	51
			1.85	0.0728	1.850	1	25	2	51
	49			0.0730	1.854	1	25	2	51
			1.90	0.0748	1.900	1	25	2	51
	48			0.0760	1.930	1	25	2	51
			1.95	0.0768	1.950	1	25	2	51
5/64				0.0781	1.984	1	25	2	51
	47			0.0785	1.994	1	25	2	51
			2.00	0.0787	2.000	1	25	2	51
			2.05	0.0807	2.050	1 1/8	29	2 1/8	54
	46			0.0810	2.057	1 1/8	29	2 1/8	54
	45			0.0820	2.083	1 1/8	29	2 1/8	54
			2.10	0.0827	2.100	1 1/8	29	2 1/8	54
			2.15	0.0846	2.150	1 1/8	29	2 1/8	54
	44			0.0860	2.184	1 1/8	29	2 1/8	54
			2.20	0.0866	2.200	1 1/4	32	2 1/4	57
			2.25	0.0886	2.250	1 1/4	32	2 1/4	57
	43			0.0890	2.261	1 1/4	32	2 1/4	57
			2.30	0.0906	2.300	1 1/4	32	2 1/4	57
			2.35	0.0925	2.350	1 1/4	32	2 1/4	57
	42			0.0935	2.375	1 1/4	32	2 1/4	57
3/32				0.0938	2.383	1 1/4	32	2 1/4	57
			2.40	0.0945	2.400	1 3/8	35	2 3/8	60

Copyright ASME International
Provided by IHS under license with ASME
No reproduction or networking permitted without license from IHS

Not for Resale

TABLE 1 GENERAL DIMENSIONS OF STRAIGHT SHANK TWIST DRILLS — JOBBERS LENGTH — FRACTIONAL, NUMBER, LETTER AND METRIC SIZES (CONT'D)

Diameter of Drill						Flute Length		Overall Length	
D				Decimal Inch Equivalent	Millimeter Equivalent	F		L	
Fraction	No.	Ltr.	Millimeter			Inch	mm	Inch	mm
	41			0.0960	2.438	1 3/8	35	2 3/8	60
			2.46	0.0965	2.450	1 3/8	35	2 3/8	60
	40			0.0980	2.489	1 3/8	35	2 3/8	60
			2.50	0.0984	2.500	1 3/8	35	2 3/8	60
	39			0.0995	2.527	1 3/8	35	2 3/8	60
	38			0.1015	2.578	1 7/16	37	2 1/2	64
			2.60	0.1024	2.600	1 7/16	37	2 1/2	64
	37			0.1040	2.642	1 7/16	37	2 1/2	64
			2.70	0.1063	2.700	1 7/16	37	2 1/2	64
	36			0.1065	2.705	1 7/16	37	2 1/2	64
7/64				0.1094	2.779	1 1/2	38	2 5/8	67
	35			0.1100	2.794	1 1/2	38	2 5/8	67
			2.80	0.1102	2.800	1 1/2	38	2 5/8	67
	34			0.1110	2.819	1 1/2	38	2 5/8	67
	33			0.1130	2.870	1 1/2	38	2 5/8	67
			2.90	0.1142	2.900	1 5/8	41	2 3/4	70
	32			0.1160	2.946	1 5/8	41	2 3/4	70
			3.00	0.1181	3.000	1 5/8	41	2 3/4	70
	31			0.1200	3.048	1 5/8	41	2 3/4	70
			3.10	0.1220	3.100	1 5/8	41	2 3/4	70
1/8				0.1250	3.175	1 5/8	41	2 3/4	70
			3.20	0.1260	3.200	1 5/8	41	2 3/4	70
	30			0.1285	3.264	1 5/8	41	2 3/4	70
			3.30	0.1299	3.300	1 3/4	44	2 7/8	73
			3.40	0.1339	3.400	1 3/4	44	2 7/8	73
	29			0.1360	3.454	1 3/4	44	2 7/8	73
			3.50	0.1378	3.500	1 3/4	44	2 7/8	73
	28			0.1405	3.569	1 3/4	44	2 7/8	73
9/64				0.1406	3.571	1 3/4	44	2 7/8	73
			3.60	0.1417	3.600	1 7/8	48	3	76
	27			0.1440	3.658	1 7/8	48	3	76
			3.70	0.1457	3.700	1 7/8	48	3	76
	26			0.1470	3.734	1 7/8	48	3	76
	25			0.1495	3.797	1 7/8	48	3	76
			3.80	0.1496	3.800	1 7/8	48	3	76
	24			0.1520	3.861	2	51	3 1/8	79
			3.90	0.1535	3.900	2	51	3 1/8	79
	23			0.1540	3.912	2	51	3 1/8	79
5/32				0.1562	3.967	2	51	3 1/8	79
	22			0.1570	3.988	2	51	3 1/8	79

Copyright ASME International
Provided by IHS under license with ASME
No reproduction or networking permitted without license from IHS

Not for Resale

TABLE 1 GENERAL DIMENSIONS OF STRAIGHT SHANK TWIST DRILLS — JOBBERS LENGTH — FRACTIONAL, NUMBER, LETTER AND METRIC SIZES (CONT'D)

Diameter of Drill						Flute Length		Overall Length	
D				Decimal Inch Equivalent	Millimeter Equivalent	*F*		*L*	
Fraction	No.	Ltr.	Millimeter			Inch	mm	Inch	mm
			4.00	0.1575	4.000	2 1/8	54	3 1/4	83
	21			0.1590	4.039	2 1/8	54	3 1/4	83
	20			0.1610	4.089	2 1/8	54	3 1/4	83
			4.10	0.1614	4.100	2 1/8	54	3 1/4	83
			4.20	0.1654	4.200	2 1/8	54	3 1/4	83
	19			0.1660	4.216	2 1/8	54	3 1/4	83
			4.30	0.1693	4.300	2 1/8	54	3 1/4	83
	18			0.1695	4.305	2 1/8	54	3 1/4	83
11/64				0.1719	4.366	2 1/8	54	3 1/4	83
	17			0.1730	4.394	2 3/16	56	3 3/8	86
			4.40	0.1732	4.400	2 3/16	56	3 3/8	86
	16			0.1770	4.496	2 3/16	56	3 3/8	86
			4.50	0.1772	4.500	2 3/16	56	3 3/8	86
	15			0.1800	4.572	2 3/16	56	3 3/8	86
			4.60	0.1811	4.600	2 3/16	56	3 3/8	86
	14			0.1820	4.623	2 3/16	56	3 3/8	86
	13		4.70	0.1850	4.700	2 5/16	59	3 1/2	89
3/16				0.1875	4.762	2 5/16	59	3 1/2	89
	12		4.80	0.1890	4.800	2 5/16	59	3 1/2	89
	11			0.1910	4.851	2 5/16	59	3 1/2	89
			4.90	0.1929	4.900	2 7/16	62	3 5/8	92
	10			0.1935	4.915	2 7/16	62	3 5/8	92
	9			0.1960	4.978	2 7/16	62	3 5/8	92
			5.00	0.1969	5.000	2 7/16	62	3 5/8	92
	8			0.1990	5.055	2 7/16	62	3 5/8	92
			5.10	0.2008	5.100	2 7/16	62	3 5/8	92
	7			0.2010	5.105	2 7/16	62	3 5/8	92
13/64				0.2031	5.159	2 7/16	62	3 5/8	92
	6			0.2040	5.182	2 1/2	64	3 3/4	95
			5.20	0.2047	5.200	2 1/2	64	3 3/4	95
	5			0.2055	5.220	2 1/2	64	3 3/4	95
			5.30	0.2087	5.300	2 1/2	64	3 3/4	95
	4			0.2090	5.309	2 1/2	64	3 3/4	95
			5.40	0.2126	5.400	2 1/2	64	3 3/4	95
	3			0.2130	5.410	2 1/2	64	3 3/4	95
			5.50	0.2165	5.500	2 1/2	64	3 3/4	95
7/32				0.2188	5.558	2 1/2	64	3 3/4	95
			5.60	0.2205	5.600	2 5/8	67	3 7/8	98
	2			0.2210	5.613	2 5/8	67	3 7/8	98
			5.70	0.2244	5.700	2 5/8	67	3 7/8	98

Copyright ASME International
Provided by IHS under license with ASME
No reproduction or networking permitted without license from IHS

Not for Resale

TABLE 1 GENERAL DIMENSIONS OF STRAIGHT SHANK TWIST DRILLS — JOBBERS LENGTH — FRACTIONAL, NUMBER, LETTER AND METRIC SIZES (CONT'D)

Diameter of Drill						Flute Length		Overall Length	
D				Decimal Inch Equivalent	Millimeter Equivalent	*F*		*L*	
Fraction	No.	Ltr.	Millimeter			Inch	mm	Inch	mm
	1			0.2280	5.791	2 5/8	67	3 7/8	98
			5.80	0.2283	5.800	2 5/8	67	3 7/8	98
			5.90	0.2323	5.900	2 5/8	67	3 7/8	98
		A		0.2340	5.944	2 5/8	67	3 7/8	98
15/64				0.2344	5.953	2 5/8	67	3 7/8	98
			6.00	0.2362	6.000	2 3/4	70	4	102
		B		0.2380	6.045	2 3/4	70	4	102
			6.10	0.2402	6.100	2 3/4	70	4	102
		C		0.2420	6.147	2 3/4	70	4	102
			6.20	0.2441	6.200	2 3/4	70	4	102
		D		0.2460	6.248	2 3/4	70	4	102
			6.30	0.2480	6.300	2 3/4	70	4	102
1/4		*E*		0.2500	6.350	2 3/4	70	4	102
			6.40	0.2520	6.400	2 7/8	73	4 1/8	105
			6.50	0.2559	6.500	2 7/8	73	4 1/8	105
		F		0.2570	6.528	2 7/8	73	4 1/8	105
			6.60	0.2598	6.600	2 7/8	73	4 1/8	105
		G		0.2610	6.629	2 7/8	73	4 1/8	105
			6.70	0.2638	6.700	2 7/8	73	4 1/8	105
17/64				0.2656	6.746	2 7/8	73	4 1/8	105
		H		0.2660	6.756	2 7/8	73	4 1/8	105
			6.80	0.2677	6.800	2 7/8	73	4 1/8	105
			6.90	0.2717	6.900	2 7/8	73	4 1/8	105
		I		0.2720	6.909	2 7/8	73	4 1/8	105
			7.00	0.2756	7.000	2 7/8	73	4 1/8	105
		J		0.2770	7.036	2 7/8	73	4 1/8	105
			7.10	0.2795	7.100	2 15/16	75	4 1/4	108
		K		0.2810	7.137	2 15/16	75	4 1/4	108
9/32				0.2812	7.142	2 15/16	75	4 1/4	108
			7.20	0.2835	7.200	2 15/16	75	4 1/4	108
			7.30	0.2874	7.300	2 15/16	75	4 1/4	108
		L		0.2900	7.366	2 15/16	75	4 1/4	108
			7.40	0.2913	7.400	3 1/16	78	4 3/8	111
		M		0.2950	7.493	3 1/16	78	4 3/8	111
			7.50	0.2953	7.500	3 1/16	78	4 3/8	111
19/64				0.2969	7.541	3 1/16	78	4 3/8	111
			7.60	0.2992	7.600	3 1/16	78	4 3/8	111
		N		0.3020	7.671	3 1/16	78	4 3/8	111
			7.70	0.3031	7.700	3 3/16	81	4 1/2	114
			7.80	0.3071	7.800	3 3/16	81	4 1/2	114

Copyright ASME International
Provided by IHS under license with ASME
No reproduction or networking permitted without license from IHS

Not for Resale

TABLE 1 GENERAL DIMENSIONS OF STRAIGHT SHANK TWIST DRILLS — JOBBERS LENGTH — FRACTIONAL, NUMBER, LETTER AND METRIC SIZES (CONT'D)

Diameter of Drill						Flute Length		Overall Length	
D				Decimal Inch Equivalent	Millimeter Equivalent	*F*		*L*	
Fraction	No.	Ltr.	Millimeter			Inch	mm	Inch	mm
			7.90	0.3110	7.900	3 3/16	81	4 1/2	114
5/16				0.3125	7.938	3 3/16	81	4 1/2	114
			8.00	0.3150	8.000	3 3/16	81	4 1/2	114
		O		0.3160	8.026	3 3/16	81	4 1/2	114
			8.10	0.3189	8.100	3 5/16	84	4 5/8	117
			8.20	0.3228	8.200	3 5/16	84	4 5/8	117
		P		0.3230	8.204	3 5/16	84	4 5/8	117
			8.30	0.3268	8.300	3 5/16	84	4 5/8	117
21/64				0.3281	8.334	3 5/16	84	4 5/8	117
			8.40	0.3307	8.400	3 7/16	87	4 3/4	121
		Q		0.3320	8.433	3 7/16	87	4 3/4	121
			8.50	0.3346	8.500	3 7/16	87	4 3/4	121
			8.60	0.3386	8.600	3 7/16	87	4 3/4	121
		R		0.3390	8.611	3 7/16	87	4 3/4	121
			8.70	0.3425	8.700	3 7/16	87	4 3/4	121
11/32				0.3438	8.733	3 7/16	87	4 3/4	121
			8.80	0.3465	8.800	3 1/2	89	4 7/8	124
		S		0.3480	8.839	3 1/2	89	4 7/8	124
			8.90	0.3504	8.900	3 1/2	89	4 7/8	124
			9.00	0.3543	9.000	3 1/2	89	4 7/8	124
		T		0.3580	9.093	3 1/2	89	4 7/8	124
			9.10	0.3583	9.100	3 1/2	89	4 7/8	124
23/64				0.3594	9.129	3 1/2	89	4 7/8	124
			9.20	0.3622	9.200	3 5/8	92	5	127
			9.30	0.3661	9.300	3 5/8	92	5	127
		U		0.3680	9.347	3 5/8	92	5	127
			9.40	0.3701	9.400	3 5/8	92	5	127
			9.50	0.3740	9.500	3 5/8	92	5	127
3/8				0.3750	9.525	3 5/8	92	5	127
		V		0.3770	9.576	3 5/8	92	5	127
			9.60	0.3780	9.600	3 3/4	95	5 1/8	130
			9.70	0.3819	9.700	3 3/4	95	5 1/8	130
			9.80	0.3858	9.800	3 3/4	95	5 1/8	130
		W		0.3860	9.804	3 3/4	95	5 1/8	130
			9.90	0.3898	9.900	3 3/4	95	5 1/8	130
25/64				0.3906	9.921	3 3/4	95	5 1/8	130
			10.00	0.3937	10.000	3 3/4	95	5 1/8	130
		X		0.3970	10.084	3 3/4	95	5 1/8	130
			10.20	0.4016	10.200	3 7/8	98	5 1/4	133
		Y		0.4040	10.262	3 7/8	98	5 1/4	133

Copyright ASME International
Provided by IHS under license with ASME
No reproduction or networking permitted without license from IHS

Not for Resale

TABLE 1 GENERAL DIMENSIONS OF STRAIGHT SHANK TWIST DRILLS — JOBBERS LENGTH — FRACTIONAL, NUMBER, LETTER AND METRIC SIZES (CONT'D)

Diameter of Drill						Flute Length		Overall Length	
D				Decimal Inch Equivalent	Millimeter Equivalent	F		L	
Fraction	No.	Ltr.	Millimeter			Inch	mm	Inch	mm
13/32				0.4062	10.317	3 7/8	98	5 1/4	133
		Z		0.4130	10.490	3 7/8	98	5 1/4	133
			10.50	0.4134	10.500	3 7/8	98	5 1/4	133
27/64				0.4219	10.716	3 15/16	100	5 3/8	137
			10.80	0.4252	10.800	4 1/16	103	5 1/2	140
			11.00	0.4331	11.000	4 1/16	103	5 1/2	140
7/16				0.4375	11.112	4 1/16	103	5 1/2	140
			11.20	0.4409	11.200	4 3/16	106	5 5/8	143
			11.50	0.4528	11.500	4 3/16	106	5 5/8	143
29/64				0.4531	11.509	4 3/16	106	5 5/8	143
			11.80	0.4646	11.800	4 5/16	110	5 3/4	146
15/32				0.4688	11.908	4 5/16	110	5 3/4	146
			12.00	0.4724	12.000	4 3/8	111	5 7/8	149
			12.20	0.4803	12.200	4 3/8	111	5 7/8	149
31/64				0.4844	12.304	4 3/8	111	5 7/8	149
			12.50	0.4921	12.500	4 1/2	114	6	152
1/2				0.5000	12.700	4 1/2	114	6	152
			12.90	0.5039	12.800	4 1/2	114	6	152
			13.00	0.5118	13.000	4 1/2	114	6	152
33/64				0.5156	13.096	4 13/16	122	6 5/8	168
			13.20	0.5197	13.200	4 13/16	122	6 5/8	168
17/32				0.5312	13.494	4 13/16	122	6 5/8	168
			13.50	0.5315	13.500	4 13/16	122	6 5/8	168
			13.80	0.5433	13.800	4 13/16	122	6 5/8	168
35/64				0.5469	13.891	4 13/16	122	6 5/8	168
			14.00	0.5512	14.000	4 13/16	122	6 5/8	168
			14.25	0.5610	14.250	4 13/16	122	6 5/8	168
9/16				0.5625	14.288	4 13/16	122	6 5/8	168
			14.50	0.5709	14.500	4 13/16	122	6 5/8	168
37/64				0.5781	14.684	4 13/16	122	6 5/8	168
			14.75	0.5807	14.750	5 3/16	132	7 1/8	181
			15.00	0.5906	15.000	5 3/16	132	7 1/8	181
19/32				0.5938	15.083	5 3/16	132	7 1/8	181
			15.25	0.6004	15.250	5 3/16	132	7 1/8	181
39/64				0.6094	15.479	5 3/16	132	7 1/8	181
			15.50	0.6102	15.500	5 3/16	132	7 1/8	181
			15.75	0.6201	15.750	5 3/16	132	7 1/8	181
5/8				0.6250	15.875	5 3/16	132	7 1/8	181
			16.00	0.6299	16.000	5 3/16	132	7 1/8	181
			16.25	0.6398	16.250	5 3/16	132	7 1/8	181

Copyright ASME International
Provided by IHS under license with ASME
No reproduction or networking permitted without license from IHS

Not for Resale

TABLE 1 GENERAL DIMENSIONS OF STRAIGHT SHANK TWIST DRILLS — JOBBERS LENGTH — FRACTIONAL, NUMBER, LETTER AND METRIC SIZES (CONT'D)

Diameter of Drill						Flute Length		Overall Length	
D				Decimal Inch Equivalent	Millimeter Equivalent	*F*		*L*	
Fraction	No.	Ltr.	Millimeter			Inch	mm	Inch	mm
41/64				0.6406	16.271	5 3/16	132	7 1/8	181
			16.50	0.6496	16.500	5 3/16	132	7 1/8	181
21/32				0.6562	16.667	5 3/16	132	7 1/8	181
			16.75	0.6594	16.750	5 5/8	143	7 5/8	194
			17.00	0.6693	17.000	5 5/8	143	7 5/8	194
43/64				0.6719	17.066	5 5/8	143	7 5/8	194
			17.25	0.6791	17.250	5 5/8	143	7 5/8	194
11/16				0.6875	17.462	5 5/8	143	7 5/8	194
			17.50	0.6890	17.500	5 5/8	143	7 5/8	194

Copyright ASME International
Provided by IHS under license with ASME
No reproduction or networking permitted without license from IHS

Not for Resale

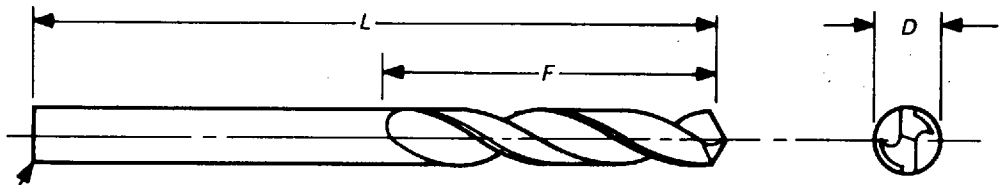

Chamfer sizes 3/32 in. and larger. For sizes under 3/32 in. a chamfer or conical point may be used at the manufacturer's option.

See Table 10 for tolerances

TABLE 2A GENERAL DIMENSIONS OF STRAIGHT SHANK TWIST DRILLS — TAPER LENGTH — THROUGH 1/2 in. (12.7 mm) DIA. FRACTIONAL, NUMBER, AND METRIC SIZES

Diameter of Drill					Flute Length		Overall Length	
D			Decimal Inch Equivalent	Millimeter Equivalent	F		L	
Fraction	No.	mm			Inch	mm	Inch	mm
		1.00	0.0394	1.000	1 1/8	29	2 1/4	57
	60		0.0400	1.016	1 1/8	29	2 1/4	57
	59		0.0410	1.041	1 1/8	29	2 1/4	57
		1.05	0.0413	1.050	1 1/8	29	2 1/4	57
	58		0.0420	1.067	1 1/8	29	2 1/4	57
	57		0.0430	1.092	1 1/8	29	2 1/4	57
		1.10	0.0433	1.100	1 1/8	29	2 1/4	57
		1.15	0.0453	1.150	1 1/8	29	2 1/4	57
	56		0.0465	1.181	1 1/8	29	2 1/4	57
3/64			0.0469	1.191	1 1/8	29	2 1/4	57
		1.20	0.0472	1.200	1 3/4	44	3	76
		1.25	0.0492	1.250	1 3/4	44	3	76
		1.30	0.0512	1.300	1 3/4	44	3	76
	55		0.0520	1.321	1 3/4	44	3	76
		1.35	0.0531	1.350	1 3/4	44	3	76
	54		0.0550	1.397	1 3/4	44	3	76
		1.40	0.0551	1.400	1 3/4	44	3	76
		1.45	0.0571	1.450	1 3/4	44	3	76
		1.50	0.0591	1.500	1 3/4	44	3	76
	53		0.0595	1.511	1 3/4	44	3	76
		1.55	0.0610	1.550	1 3/4	44	3	76
1/16			0.0625	1.588	1 3/4	44	3	76
		1.60	0.0630	1.600	2	51	3 3/4	95
	52		0.0635	1.613	2	51	3 3/4	95
		1.65	0.0650	1.650	2	51	3 3/4	95
		1.70	0.0669	1.700	2	51	3 3/4	95
	51		0.0670	1.702	2	51	3 3/4	95
		1.75	0.0689	1.750	2	51	3 3/4	95
	50		0.0700	1.778	2	51	3 3/4	95
		1.80	0.0709	1.800	2	51	3 3/4	95

Copyright ASME International
Provided by IHS under license with ASME
No reproduction or networking permitted without license from IHS
Not for Resale

TABLE 2A GENERAL DIMENSIONS OF STRAIGHT SHANK TWIST DRILLS — TAPER LENGTH — THROUGH 1/2 in. (12.7 mm) DIA. FRACTIONAL, NUMBER, AND METRIC SIZES (CONT'D)

Diameter of Drill					Flute Length		Overall Length	
D			Decimal Inch Equivalent	Millimeter Equivalent	*F*		*L*	
Fraction	No.	mm			Inch	mm	Inch	mm
		1.85	0.0728	1.850	2	51	3¾	95
	49		0.0730	1.854	2	51	3¾	95
		1.90	0.0748	1.900	2	51	3¾	95
	48		0.0760	1.930	2	51	3¾	95
		1.95	0.0768	1.950	2	51	3¾	95
5/64			0.0781	1.984	2	51	3¾	95
	47		0.0785	1.994	2¼	57	4¼	108
		2.00	0.0787	2.000	2¼	57	4¼	108
		2.05	0.0807	2.050	2¼	57	4¼	108
	46		0.0810	2.057	2¼	57	4¼	108
	45		0.0820	2.083	2¼	57	4¼	108
		2.10	0.0827	2.100	2¼	57	4¼	108
		2.15	0.0846	2.150	2¼	57	4¼	108
	44		0.0860	2.184	2¼	57	4¼	108
		2.20	0.0866	2.200	2¼	57	4¼	108
		2.25	0.0886	2.250	2¼	57	4¼	108
	43		0.0890	2.261	2¼	57	4¼	108
		2.30	0.0906	2.300	2¼	57	4¼	108
		2.35	0.0925	2.350	2¼	57	4¼	108
	42		0.0935	2.375	2¼	57	4¼	108
3/32			0.0938	2.383	2¼	57	4¼	108
		2.40	0.0945	2.400	2½	64	4⅝	117
	41		0.0960	2.438	2½	64	4⅝	117
		2.45	0.0965	2.450	2½	64	4⅝	117
	40		0.0980	2.489	2½	64	4⅝	117
		2.50	0.0984	2.500	2½	64	4⅝	117
	39		0.0995	2.527	2½	64	4⅝	117
	38		0.1015	2.578	2½	64	4⅝	117
		2.60	0.1024	2.600	2½	64	4⅝	117
	37		0.1040	2.642	2½	64	4⅝	117
		2.70	0.1063	2.700	2½	64	4⅝	117
	36		0.1065	2.705	2½	64	4⅝	117
7/64			0.1094	2.779	2½	64	4⅝	117
	35		0.1100	2.794	2¾	70	5⅛	130
		2.80	0.1102	2.800	2¾	70	5⅛	130
	34		0.1110	2.819	2¾	70	5⅛	130
	33		0.1130	2.870	2¾	70	5⅛	130
		2.90	0.1142	2.900	2¾	70	5⅛	130
	32		0.1160	2.946	2¾	70	5⅛	130
		3.00	0.1181	3.000	2¾	70	5⅛	130

Copyright ASME International
Provided by IHS under license with ASME
No reproduction or networking permitted without license from IHS
Not for Resale

TABLE 2A GENERAL DIMENSIONS OF STRAIGHT SHANK TWIST DRILLS — TAPER LENGTH — THROUGH 1/2 in. (12.7 mm) DIA. FRACTIONAL, NUMBER, AND METRIC SIZES (CONT'D)

Diameter of Drill					Flute Length		Overall Length	
D			Decimal Inch Equivalent	Millimeter Equivalent	F		L	
Fraction	No.	mm			Inch	mm	Inch	mm
	31		0.1200	3.048	2 3/4	70	5 1/8	130
		3.10	0.1220	3.100	2 3/4	70	5 1/8	130
1/8			0.1250	3.175	2 3/4	70	5 1/8	130
		3.20	0.1260	3.200	3	76	5 3/8	137
	30		0.1285	3.264	3	76	5 3/8	137
		3.30	0.1299	3.300	3	76	5 3/8	137
		3.40	0.1339	3.400	3	76	5 3/8	137
	29		0.1360	3.454	3	76	5 3/8	137
		3.50	0.1378	3.500	3	76	5 3/8	137
	28		0.1405	3.569	3	76	5 3/8	137
9/64			0.1406	3.571	3	76	5 3/8	137
		3.60	0.1417	3.600	3	76	5 3/8	137
	27		0.1440	3.658	3	76	5 3/8	137
		3.70	0.1457	3.700	3	76	5 3/8	137
	26		0.1470	3.734	3	76	5 3/8	137
	25		0.1495	3.797	3	76	5 3/8	137
		3.80	0.1496	3.800	3	76	5 3/8	137
	24		0.1520	3.861	3	76	5 3/8	137
		3.90	0.1535	3.900	3	76	5 3/8	137
	23		0.1540	3.912	3	76	5 3/8	137
5/32			0.1562	3.967	3	76	5 3/8	137
	22		0.1570	3.988	3 3/8	86	5 3/4	146
		4.00	0.1575	4.000	3 3/8	86	5 3/4	146
	21		0.1590	4.039	3 3/8	86	5 3/4	146
	20		0.1610	4.089	3 3/8	86	5 3/4	146
		4.10	0.1614	4.100	3 3/8	86	5 3/4	146
		4.20	0.1654	4.200	3 3/8	86	5 3/4	146
	19		0.1660	4.216	3 3/8	86	5 3/4	146
		4.30	0.1693	4.300	3 3/8	86	5 3/4	146
	18		0.1695	4.305	3 3/8	86	5 3/4	146
11/64			0.1719	4.366	3 3/8	86	5 3/4	146
	17		0.1730	4.394	3 3/8	86	5 3/4	146
		4.40	0.1732	4.400	3 3/8	86	5 3/4	146
	16		0.1770	4.496	3 3/8	86	5 3/4	146
		4.50	0.1772	4.500	3 3/8	86	5 3/4	146
	15		0.1800	4.572	3 3/8	86	5 3/4	146
		4.60	0.1811	4.600	3 3/8	86	5 3/4	146
	14		0.1820	4.623	3 3/8	86	5 3/4	146
	13	4.70	0.1850	4.700	3 3/8	86	5 3/4	146
3/16			0.1875	4.762	3 3/8	86	5 3/4	146

Copyright ASME International
Provided by IHS under license with ASME
No reproduction or networking permitted without license from IHS
Not for Resale

TABLE 2A GENERAL DIMENSIONS OF STRAIGHT SHANK TWIST DRILLS — TAPER LENGTH — THROUGH 1/2 in. (12.7 mm) DIA. FRACTIONAL, NUMBER, AND METRIC SIZES (CONT'D)

Diameter of Drill					Flute Length		Overall Length	
D			Decimal Inch Equivalent	Millimeter Equivalent	*F*		*L*	
Fraction	No.	mm			Inch	mm	Inch	mm
	12	4.80	0.1890	4.800	3 5/8	92	6	152
	11		0.1910	4.851	3 5/8	92	6	152
		4.90	0.1929	4.900	3 5/8	92	6	152
	10		0.1935	4.915	3 5/8	92	6	152
	9		0.1960	4.978	3 5/8	92	6	152
		5.00	0.1969	5.000	3 5/8	92	6	152
	8		0.1990	5.055	3 5/8	92	6	152
		5.10	0.2008	5.100	3 5/8	92	6	152
	7		0.2010	5.105	3 5/8	92	6	152
13/64			0.2031	5.159	3 5/8	92	6	152
	6		0.2040	5.182	3 5/8	92	6	152
		5.20	0.2047	5.200	3 5/8	92	6	152
	5		0.2055	5.220	3 5/8	92	6	152
		5.30	0.2087	5.300	3 5/8	92	6	152
	4		0.2090	5.309	3 5/8	92	6	152
		5.40	0.2126	5.400	3 5/8	92	6	152
	3		0.2130	5.410	3 5/8	92	6	152
		5.50	0.2165	5.500	3 5/8	92	6	152
7/32			0.2188	5.558	3 5/8	92	6	152
		5.60	0.2205	5.600	3 3/4	95	6 1/8	156
	2		0.2210	5.613	3 3/4	95	6 1/8	156
		5.70	0.2244	5.700	3 3/4	95	6 1/8	156
	1		0.2280	5.791	3 3/4	95	6 1/8	156
		5.80	0.2283	5.800	3 3/4	95	6 1/8	156
		5.90	0.2323	5.900	3 3/4	95	6 1/8	156
15/64			0.2344	5.954	3 3/4	95	6 1/8	156
		6.00	0.2362	6.000	3 3/4	95	6 1/8	156
		6.10	0.2402	6.100	3 3/4	95	6 1/8	156
		6.20	0.2441	6.200	3 3/4	95	6 1/8	156
		6.30	0.2480	6.300	3 3/4	95	6 1/8	156
1/4			0.2500	6.350	3 3/4	95	6 1/8	156
		6.40	0.2520	6.400	3 7/8	98	6 1/4	159
		6.50	0.2559	6.500	3 7/8	98	6 1/4	159
17/64			0.2656	6.746	3 7/8	98	6 1/4	159
		6.80	0.2677	6.800	3 7/8	98	6 1/4	159
		7.00	0.2756	7.000	3 7/8	98	6 1/4	159
9/32			0.2812	7.142	3 7/8	98	6 1/4	159
		7.20	0.2835	7.200	4	102	6 3/8	162
		7.50	0.2953	7.500	4	102	6 3/8	162
19/64			0.2969	7.541	4	102	6 3/8	162

Copyright ASME International
Provided by IHS under license with ASME
No reproduction or networking permitted without license from IHS

Not for Resale

TABLE 2A GENERAL DIMENSIONS OF STRAIGHT SHANK TWIST DRILLS — TAPER LENGTH — THROUGH 1/2 in. (12.7 mm) DIA. FRACTIONAL, NUMBER, AND METRIC SIZES (CONT'D)

Diameter of Drill					Flute Length		Overall Length	
D			Decimal Inch Equivalent	Millimeter Equivalent	*F*		*L*	
Fraction	No.	mm			Inch	mm	Inch	mm
		7.80	0.3071	7.800	4	102	6 3/8	162
5/16			0.3125	7.938	4	102	6 3/8	162
		8.00	0.3150	8.000	4 1/8	105	6 1/2	165
		8.20	0.3228	8.200	4 1/8	105	6 1/2	165
21/64			0.3281	8.334	4 1/8	105	6 1/2	165
		8.50	0.3346	8.500	4 1/8	105	6 1/2	165
11/32			0.3438	8.733	4 1/8	105	6 1/2	165
		8.80	0.3465	8.800	4 1/4	108	6 3/4	171
		9.00	0.3543	9.000	4 1/4	108	6 3/4	171
23/64			0.3594	9.129	4 1/4	108	6 3/4	171
		9.20	0.3622	9.200	4 1/4	108	6 3/4	171
		9.50	0.3740	9.500	4 1/4	108	6 3/4	171
3/8			0.3750	9.525	4 1/4	108	6 3/4	171
		9.80	0.3858	9.800	4 3/8	111	7	178
25/64			0.3906	9.921	4 3/8	111	7	178
		10.00	0.3937	10.000	4 3/8	111	7	178
		10.20	0.4016	10.200	4 3/8	111	7	178
13/32			0.4062	10.317	4 3/8	111	7	178
		10.50	0.4134	10.500	4 5/8	117	7 1/4	184
27/64			0.4219	10.716	4 5/8	117	7 1/4	184
		10.80	0.4252	10.800	4 5/8	117	7 1/4	184
		11.00	0.4331	11.000	4 5/8	117	7 1/4	184
7/16			0.4375	11.112	4 5/8	117	7 1/4	184
		11.20	0.4409	11.200	4 3/4	121	7 1/2	190
		11.50	0.4528	11.500	4 3/4	121	7 1/2	190
29/64			0.4531	11.509	4 3/4	121	7 1/2	190
		11.80	0.4646	11.800	4 3/4	121	7 1/2	190
15/32			0.4688	11.908	4 3/4	121	7 1/2	190
		12.00	0.4724	12.000	4 3/4	121	7 3/4	197
		12.20	0.4803	12.200	4 3/4	121	7 3/4	197
31/64			0.4844	12.304	4 3/4	121	7 3/4	197
		12.50	0.4921	12.500	4 3/4	121	7 3/4	197
1/2			0.5000	12.700	4 3/4	121	7 3/4	197

Copyright ASME International
Provided by IHS under license with ASME
No reproduction or networking permitted without license from IHS
Not for Resale

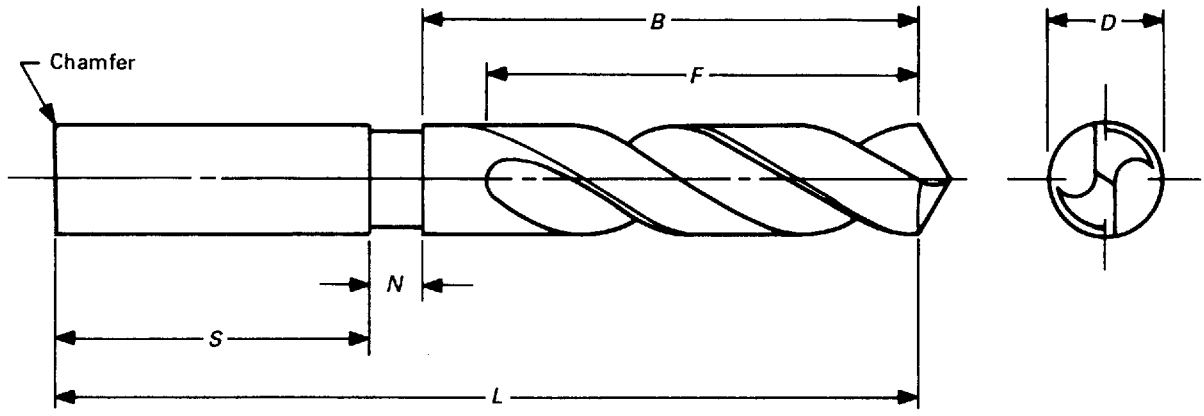

Nominal shank size is same as nominal drill size

See Table 10 for drill tolerances

TABLE 2B GENERAL DIMENSIONS OF STRAIGHT SHANK TWIST DRILLS — TAPER LENGTH — OVER 1/2 in. (12.7 mm) DIA. FRACTIONAL AND METRIC SIZES

Diameter of Drill				Flute Length		Overall Length		Length of Body		Minimum Length of Shank		Maximum Length of Neck	
D		Decimal Inch Equiv.	Millimeter Equiv.	F		L		B		S		N	
Frac.	mm			Inch	mm	Inch	mm	Inch	mm	Inch	mm	Inch	mm
	12.80	0.5039	12.800	4 3/4	121	8	203	4 7/8	124	2 5/8	66	1/2	13
	13.00	0.5118	13.000	4 3/4	121	8	203	4 7/8	124	2 5/8	66	1/2	13
33/64		0.5156	13.096	4 3/4	121	8	203	4 7/8	124	2 5/8	66	1/2	13
	13.20	0.5197	13.200	4 3/4	121	8	203	4 7/8	124	2 5/8	66	1/2	13
17/32		0.5312	13.492	4 3/4	121	8	203	4 7/8	124	2 5/8	66	1/2	13
	13.50	0.5315	13.500	4 3/4	121	8	203	4 7/8	124	2 5/8	66	1/2	13
	13.80	0.5433	13.800	4 7/8	124	8 1/4	210	5	127	2 3/4	70	1/2	13
35/64		0.5469	13.891	4 7/8	124	8 1/4	210	5	127	2 3/4	70	1/2	13
	14.00	0.5512	14.000	4 7/8	124	8 1/4	210	5	127	2 3/4	70	1/2	13
	14.25	0.5610	14.250	4 7/8	124	8 1/4	210	5	127	2 3/4	70	1/2	13
9/16		0.5625	14.288	4 7/8	124	8 1/4	210	5	127	2 3/4	70	1/2	13
	14.50	0.5709	14.500	4 7/8	124	8 3/4	222	5	127	3 1/8	79	5/8	16
37/64		0.5781	14.684	4 7/8	124	8 3/4	222	5	127	3 1/8	79	5/8	16
	14.75	0.5807	14.750	4 7/8	124	8 3/4	222	5	127	3 1/8	79	5/8	16
	15.00	0.5906	15.000	4 7/8	124	8 3/4	222	5	127	3 1/8	79	5/8	16
19/32		0.5938	15.083	4 7/8	124	8 3/4	222	5	127	3 1/8	79	5/8	16
	15.25	0.6004	15.250	4 7/8	124	8 3/4	222	5	127	3 1/8	79	5/8	16
39/64		0.6094	15.479	4 7/8	124	8 3/4	222	5	127	3 1/8	79	5/8	16
	15.50	0.6102	15.500	4 7/8	124	8 3/4	222	5	127	3 1/8	79	5/8	16
	15.75	0.6201	15.750	4 7/8	124	8 3/4	222	5	127	3 1/8	79	5/8	16
5/8		0.6250	15.875	4 7/8	124	8 3/4	222	5	127	3 1/8	79	5/8	16
	16.00	0.6299	16.000	5 1/8	130	9	229	5 1/4	133	3 1/8	79	5/8	16
	16.25	0.6398	16.250	5 1/8	130	9	229	5 1/4	133	3 1/8	79	5/8	16
41/64		0.6406	16.271	5 1/8	130	9	229	5 1/4	133	3 1/8	79	5/8	16
	16.50	0.6496	16.500	5 1/8	130	9	229	5 1/4	133	3 1/8	79	5/8	16

Copyright ASME International
Provided by IHS under license with ASME
No reproduction or networking permitted without license from IHS

Not for Resale

TABLE 2B GENERAL DIMENSIONS OF STRAIGHT SHANK TWIST DRILLS — TAPER LENGTH — OVER 1/2 in. (12.7 mm) DIA. FRACTIONAL AND METRIC SIZES (CONT'D)

Diameter of Drill				Flute Length		Overall Length		Length of Body		Minimum Length of Shank		Maximum Length of Neck	
D		Decimal Inch	Milli-meter	F		L		B		S		N	
Frac.	mm	Equiv.	Equiv.	Inch	mm	Inch	mm	Inch	mm	Inch	mm	Inch	mm
21/32		0.6562	16.667	5 1/8	130	9	229	5 1/4	133	3 1/8	79	5/8	16
	16.75	0.6594	16.750	5 3/8	137	9 1/4	235	5 1/2	140	3 1/8	79	5/8	16
	17.00	0.6693	17.000	5 3/8	137	9 1/4	235	5 1/2	140	3 1/8	79	5/8	16
43/64		0.6719	17.066	5 3/8	137	9 1/4	235	5 1/2	140	3 1/8	79	5/8	16
	17.25	0.6791	17.250	5 3/8	137	9 1/4	235	5 1/2	140	3 1/8	79	5/8	16
11/16		0.6875	17.462	5 3/8	137	9 1/4	235	5 1/2	140	3 1/8	79	5/8	16
	17.50	0.6890	17.500	5 5/8	143	9 1/2	241	5 3/4	146	3 1/8	79	5/8	16
45/64		0.7031	17.859	5 5/8	143	9 1/2	241	5 3/4	146	3 1/8	79	5/8	16
	18.00	0.7087	18.000	5 5/8	143	9 1/2	241	5 3/4	146	3 1/8	79	5/8	16
23/32		0.7188	18.258	5 5/8	143	9 1/2	241	5 3/4	146	3 1/8	79	5/8	16
	18.50	0.7283	18.500	5 7/8	149	9 3/4	248	6	152	3 1/8	79	5/8	16
47/64		0.7344	18.654	5 7/8	149	9 3/4	248	6	152	3 1/8	79	5/8	16
	19.00	0.7480	19.000	5 7/8	149	9 3/4	248	6	152	3 1/8	79	5/8	16
3/4		0.7500	19.050	5 7/8	149	9 3/4	248	6	152	3 1/8	79	5/8	16
49/64		0.7656	19.446	6	152	9 7/8	251	6 1/8	156	3 1/8	79	5/8	16
	19.50	0.7677	19.500	6	152	9 7/8	251	6 1/8	156	3 1/8	79	5/8	16
25/32		0.7812	19.842	6	152	9 7/8	251	6 1/8	156	3 1/8	79	5/8	16
	20.00	0.7874	20.000	6 1/8	156	10	254	6 1/4	159	3 1/8	79	5/8	16
51/64		0.7969	20.241	6 1/8	156	10	254	6 1/4	159	3 1/8	79	5/8	16
	20.50	0.8071	20.500	6 1/8	156	10	254	6 1/4	159	3 1/8	79	5/8	16
13/16		0.8125	20.638	6 1/8	156	10	254	6 1/4	159	3 1/8	79	5/8	16
	21.00	0.8268	21.000	6 1/8	156	10	254	6 1/4	159	3 1/8	79	5/8	16
53/64		0.8281	21.034	6 1/8	156	10	254	6 1/4	159	3 1/8	79	5/8	16
27/32		0.8438	21.433	6 1/8	156	10	254	6 1/4	159	3 1/8	79	5/8	16
	21.50	0.8465	21.500	6 1/8	156	10	254	6 1/4	159	3 1/8	79	5/8	16
55/64		0.8594	21.829	6 1/8	156	10	254	6 1/4	159	3 1/8	79	5/8	16
	22.00	0.8661	22.000	6 1/8	156	10	254	6 1/4	159	3 1/8	79	5/8	16
7/8		0.8750	22.225	6 1/8	156	10	254	6 1/4	159	3 1/8	79	5/8	16
	22.50	0.8858	22.500	6 1/8	156	10	254	6 1/4	159	3 1/8	79	5/8	16
57/64		0.8906	22.621	6 1/8	156	10	254	6 1/4	159	3 1/8	79	5/8	16
	23.00	0.9055	23.000	6 1/8	156	10	254	6 1/4	159	3 1/8	79	5/8	16
29/32		0.9062	23.017	6 1/8	156	10	254	6 1/4	159	3 1/8	79	5/8	16
59/64		0.9219	23.416	6 1/8	156	10 3/4	273	6 1/4	159	3 7/8	98	5/8	16
	23.50	0.9252	23.500	6 1/8	156	10 3/4	273	6 1/4	159	3 7/8	98	5/8	16
15/16		0.9375	23.812	6 1/8	156	10 3/4	273	6 1/4	159	3 7/8	98	5/8	16
	24.00	0.9449	24.000	6 3/8	162	11	279	6 1/2	165	3 7/8	98	5/8	16
61/64		0.9531	24.209	6 3/8	162	11	279	6 1/2	165	3 7/8	98	5/8	16
	24.50	0.9646	24.500	6 3/8	162	11	279	6 1/2	165	3 7/8	98	5/8	16
31/32		0.9688	24.608	6 3/8	162	11	279	6 1/2	165	3 7/8	98	5/8	16
	25.00	0.9843	25.000	6 3/8	162	11	279	6 1/2	165	3 7/8	98	5/8	16

Copyright ASME International
Provided by IHS under license with ASME
No reproduction or networking permitted without license from IHS
Not for Resale

TABLE 2B GENERAL DIMENSIONS OF STRAIGHT SHANK TWIST DRILLS — TAPER LENGTH — OVER 1/2 in. (12.7 mm) DIA. FRACTIONAL AND METRIC SIZES (CONT'D)

Diameter of Drill				Flute Length		Overall Length		Length of Body		Minimum Length of Shank		Maximum Length of Neck	
D		Decimal Inch	Milli-meter	F		L		B		S		N	
Frac.	mm	Equiv.	Equiv.	Inch	mm	Inch	mm	Inch	mm	Inch	mm	Inch	mm
63/64		0.9844	25.004	6 3/8	162	11	279	6 1/2	165	3 7/8	98	5/8	16
1		1.0000	25.400	6 3/8	162	11	279	6 1/2	165	3 7/8	98	5/8	16
	25.50	1.0039	25.500	6 1/2	165	11 1/8	283	6 5/8	168	3 7/8	98	5/8	16
1 1/64		1.0156	25.796	6 1/2	165	11 1/8	283	6 5/8	168	3 7/8	98	5/8	16
	26.00	1.0236	26.000	6 1/2	165	11 1/8	283	6 5/8	168	3 7/8	98	5/8	16
1 1/32		1.0312	26.192	6 1/2	165	11 1/8	283	6 5/8	168	3 7/8	98	5/8	16
	26.50	1.0433	26.560	6 5/8	168	11 1/4	286	6 3/4	172	3 7/8	98	5/8	16
1 3/64		1.0469	26.591	6 5/8	168	11 1/4	286	6 3/4	172	3 7/8	98	5/8	16
1 1/16		1.0625	26.988	6 5/8	168	11 1/4	286	6 3/4	172	3 7/8	98	5/8	16
	27.00	1.0630	27.000	6 5/8	168	11 1/4	286	6 3/4	172	3 7/8	98	5/8	16
1 5/64		1.0781	27.384	6 7/8	175	11 1/2	292	7	178	3 7/8	98	5/8	16
	27.50	1.0827	27.500	6 7/8	175	11 1/2	292	7	178	3 7/8	98	5/8	16
1 3/32		1.0938	27.783	6 7/8	175	11 1/2	292	7	178	3 7/8	98	5/8	16
	28.00	1.1024	28.000	7 1/8	181	11 3/4	298	7 1/4	184	3 7/8	98	5/8	16
1 7/64		1.1094	28.179	7 1/8	181	11 3/4	298	7 1/4	184	3 7/8	98	5/8	16
	28.50	1.1220	28.500	7 1/8	181	11 3/4	298	7 1/4	184	3 7/8	98	5/8	16
1 1/8		1.1250	28.575	7 1/8	181	11 3/4	298	7 1/4	184	3 7/8	98	5/8	16
1 9/64		1.1406	28.971	7 1/4	184	11 7/8	302	7 3/8	187	3 7/8	98	5/8	16
	29.00	1.1417	29.000	7 1/4	184	11 7/8	302	7 3/8	187	3 7/8	98	5/8	16
1 5/32		1.1562	29.367	7 1/4	184	11 7/8	302	7 3/8	187	3 7/8	98	5/8	16
	29.50	1.1614	29.500	7 3/8	187	12	305	7 1/2	191	3 7/8	98	5/8	16
1 11/64		1.1719	29.766	7 3/8	187	12	305	7 1/2	191	3 7/8	98	5/8	16
	30.00	1.1811	30.000	7 3/8	187	12	305	7 1/2	191	3 7/8	98	5/8	16
1 3/16		1.1875	30.162	7 3/8	187	12	305	7 1/2	191	3 7/8	98	5/8	16
	30.50	1.2008	30.500	7 1/2	190	12 1/8	308	7 5/8	194	3 7/8	98	5/8	16
1 13/64		1.2031	30.559	7 1/2	190	12 1/8	308	7 5/8	194	3 7/8	98	5/8	16
1 7/32		1.2188	30.958	7 1/2	190	12 1/8	308	7 5/8	194	3 7/8	98	5/8	16
	31.00	1.2205	31.000	7 7/8	200	12 1/2	318	8	203	3 7/8	98	5/8	16
1 15/64		1.2344	31.354	7 7/8	200	12 1/2	318	8	203	3 7/8	98	5/8	16
	31.50	1.2402	31.500	7 7/8	200	12 1/2	318	8	203	3 7/8	98	5/8	16
1 1/4		1.2500	31.750	7 7/8	200	12 1/2	318	8	203	3 7/8	98	5/8	16
	32.00	1.2598	32.000	8 1/2	216	14 1/8	359	8 5/8	219	4 7/8	124	5/8	16
	32.50	1.2795	32.500	8 1/2	216	14 1/8	359	8 5/8	219	4 7/8	124	5/8	16
1 9/32		1.2812	32.542	8 1/2	216	14 1/8	359	8 5/8	219	4 7/8	124	5/8	16
	33.00	1.2992	33.000	8 5/8	219	14 1/4	362	8 3/4	222	4 7/8	124	5/8	16
1 5/16		1.3125	33.338	8 5/8	219	14 1/4	362	8 3/4	222	4 7/8	124	5/8	16
	33.50	1.3189	33.500	8 3/4	222	14 3/8	365	8 7/8	225	4 7/8	124	5/8	16
	34.00	1.3386	34.000	8 3/4	222	14 3/8	365	8 7/8	225	4 7/8	124	5/8	16
1 11/32		1.3438	34.133	8 3/4	222	14 3/8	365	8 7/8	225	4 7/8	124	5/8	16
	34.50	1.3583	34.500	8 7/8	225	14 1/2	368	9	229	4 7/8	124	5/8	16

Copyright ASME International
Provided by IHS under license with ASME
No reproduction or networking permitted without license from IHS

Not for Resale

TABLE 2B GENERAL DIMENSIONS OF STRAIGHT SHANK TWIST DRILLS — TAPER LENGTH — OVER 1/2 in. (12.7 mm) DIA. FRACTIONAL AND METRIC SIZES (CONT'D)

Diameter of Drill				Flute Length		Overall Length		Length of Body		Minimum Length of Shank		Maximum Length of Neck	
D		Decimal Inch	Milli-meter	*F*		*L*		*B*		*S*		*N*	
Frac.	mm	Equiv.	Equiv.	Inch	mm	Inch	mm	Inch	mm	Inch	mm	Inch	mm
1 3/8		1.3750	34.925	8 7/8	225	14 1/2	368	9	229	4 7/8	124	5/8	16
	35.00	1.3780	35.000	9	229	14 5/8	371	9 1/8	232	4 7/8	124	5/8	16
	35.50	1.3976	35.500	9	229	14 5/8	371	9 1/8	232	4 7/8	124	5/8	16
1 13/32		1.4062	35.717	9	229	14 5/8	371	9 1/8	232	4 7/8	124	5/8	16
	36.00	1.4173	36.000	9 1/8	232	14 3/4	375	9 1/4	235	4 7/8	124	5/8	16
	36.50	1.4370	36.500	9 1/8	232	14 3/4	375	9 1/4	235	4 7/8	124	5/8	16
1 7/16		1.4375	36.512	9 1/8	232	14 3/4	375	9 1/4	235	4 7/8	124	5/8	16
	37.00	1.4567	37.000	9 1/4	235	14 7/8	378	9 3/8	238	4 7/8	124	5/8	16
1 15/32		1.4688	37.308	9 1/4	235	14 7/8	378	9 3/8	238	4 7/8	124	5/8	16
	37.50	1.4764	37.500	9 3/8	238	15	381	9 1/2	241	4 7/8	124	5/8	16
	38.00	1.4961	38.000	9 3/8	238	15	381	9 1/2	241	4 7/8	124	5/8	16
1 1/2		1.5000	38.100	9 3/8	238	15	381	9 1/2	241	4 7/8	124	5/8	16
1 9/16		1.5625	39.688	9 5/8	244	15 1/4	387	9 3/4	247	4 7/8	124	5/8	16
1 5/8		1.6250	41.275	9 7/8	251	15 5/8	397	10	254	4 7/8	124	3/4	19
1 3/4		1.7500	44.450	10 1/2	267	16 1/4	413	10 5/8	270	4 7/8	124	3/4	19

Copyright ASME International
Provided by IHS under license with ASME
No reproduction or networking permitted without license from IHS
Not for Resale

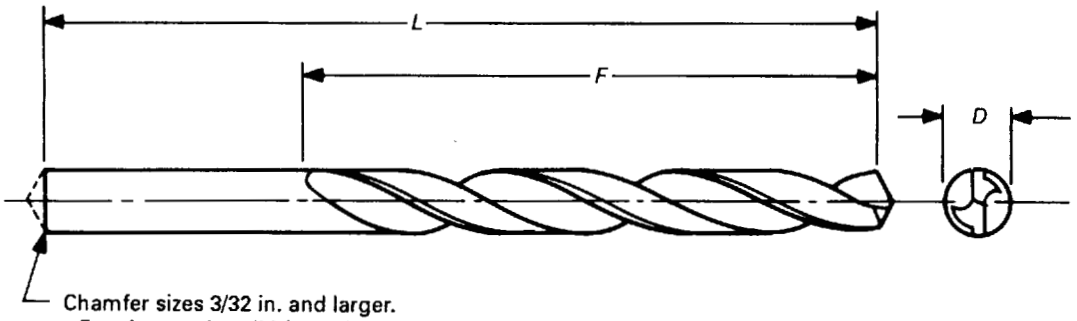

Chamfer sizes 3/32 in. and larger. For sizes under 3/32 in. a chamfer or conical point may be used at the manufacturer's option.

See Table 10 for tolerances

TABLE 3A GENERAL DIMENSIONS OF STRAIGHT SHANK TWIST DRILLS — SCREW MACHINE LENGTH — THROUGH 1 in. (25.4 mm) DIA. FRACTIONAL, NUMBER, LETTER AND METRIC SIZES

Diameter of Drill						Flute Length		Overall Length	
D				Decimal Inch Equivalent	Millimeter Equivalent	F		L	
Fraction	No.	Ltr.	mm			Inch	mm	Inch	mm
			1.00	0.0394	1.000	1/2	13	1 3/8	35
	60			0.0400	1.016	1/2	13	1 3/8	35
	59			0.0410	1.041	1/2	13	1 3/8	35
			1.05	0.0413	1.050	1/2	13	1 3/8	35
	58			0.0420	1.067	1/2	13	1 3/8	35
	57			0.0430	1.092	1/2	13	1 3/8	35
			1.10	0.0433	1.100	1/2	13	1 3/8	35
			1.15	0.0453	1.150	1/2	13	1 3/8	35
	56			0.0465	1.181	1/2	13	1 3/8	35
3/64				0.0469	1.191	1/2	13	1 3/8	35
			1.20	0.0472	1.200	5/8	16	1 5/8	41
			1.25	0.0492	1.250	5/8	16	1 5/8	41
			1.30	0.0512	1.300	5/8	16	1 5/8	41
	55			0.0520	1.321	5/8	16	1 5/8	41
			1.35	0.0531	1.350	5/8	16	1 5/8	41
	54			0.0500	1.397	5/8	16	1 5/8	41
			1.40	0.0551	1.400	5/8	16	1 5/8	41
			1.45	0.0571	1.450	5/8	16	1 5/8	41
			1.50	0.0591	1.500	5/8	16	1 5/8	41
	53			0.0595	1.511	5/8	16	1 5/8	41
			1.55	0.0610	1.550	5/8	16	1 5/8	41
1/16				0.0625	1.588	5/8	16	1 5/8	41
			1.60	0.0630	1.600	11/16	17	1 11/16	43
	52			0.0635	1.613	11/16	17	1 11/16	43
			1.65	0.0650	1.650	11/16	17	1 11/16	43

Copyright ASME International
Provided by IHS under license with ASME
No reproduction or networking permitted without license from IHS
Not for Resale

TABLE 3A GENERAL DIMENSIONS OF STRAIGHT SHANK TWIST DRILLS — SCREW MACHINE LENGTH — THROUGH 1 in. (25.4 mm) DIA. FRACTIONAL, NUMBER, LETTER AND METRIC SIZES (CONT'D)

Diameter of Drill						Flute Length		Overall Length	
D				Decimal Inch Equivalent	Millimeter Equivalent	F		L	
Fraction	No.	Ltr.	mm			Inch	mm	Inch	mm
			1.70	0.0669	1.700	11/16	17	1 11/16	43
	51			0.0670	1.702	11/16	17	1 11/16	43
			1.75	0.0689	1.750	11/16	17	1 11/16	43
	50			0.0700	1.778	11/16	17	1 11/16	43
			1.80	0.0709	1.800	11/16	17	1 11/16	43
			1.85	0.0728	1.850	11/16	17	1 11/16	43
	49			0.0730	1.854	11/16	17	1 11/16	43
			1.90	0.0748	1.900	11/16	17	1 11/16	43
	48			0.0760	1.930	11/16	17	1 11/16	43
			1.95	0.0768	1.950	11/16	17	1 11/16	43
5/64				0.0781	1.984	11/16	17	1 11/16	43
	47			0.0785	1.994	11/16	17	1 11/16	43
			2.00	0.0787	2.000	11/16	17	1 11/16	43
			2.05	0.0807	2.050	3/4	19	1 3/4	44
	46			0.0810	2.057	3/4	19	1 3/4	44
	45			0.0820	2.083	3/4	19	1 3/4	44
			2.10	0.0827	2.100	3/4	19	1 3/4	44
			2.15	0.0846	2.150	3/4	19	1 3/4	44
	44			0.0860	2.184	3/4	19	1 3/4	44
			2.20	0.0866	2.200	3/4	19	1 3/4	44
			2.25	0.0886	2.250	3/4	19	1 3/4	44
	43			0.0890	2.261	3/4	19	1 3/4	44
			2.30	0.0906	2.300	3/4	19	1 3/4	44
			2.35	0.0925	2.350	3/4	19	1 3/4	44
	42			0.0935	2.375	3/4	19	1 3/4	44
3/32				0.0938	2.383	3/4	19	1 3/4	44
			2.40	0.0945	2.400	13/16	21	1 13/16	46
	41			0.0960	2.438	13/16	21	1 13/16	46
			2.45	0.0965	2.450	13/16	21	1 13/16	46
	40			0.0980	2.489	13/16	21	1 13/16	46
			2.50	0.0984	2.500	13/16	21	1 13/16	46
	39			0.0995	2.527	13/16	21	1 13/16	46
	38			0.1015	2.578	13/16	21	1 13/16	46
			2.60	0.1024	2.600	13/16	21	1 13/16	46
	37			0.1040	2.642	13/16	21	1 13/16	46
			2.70	0.1063	2.700	13/16	21	1 13/16	46
	36			0.1065	2.705	13/16	21	1 13/16	46
7/64				0.1094	2.779	13/16	21	1 13/16	46
	35			0.1100	2.794	7/8	22	1 7/8	48
			2.80	0.1102	2.800	7/8	22	1 7/8	48

Copyright ASME International
Provided by IHS under license with ASME
No reproduction or networking permitted without license from IHS

Not for Resale

TABLE 3A GENERAL DIMENSIONS OF STRAIGHT SHANK TWIST DRILLS — SCREW MACHINE LENGTH — THROUGH 1 in. (25.4 mm) DIA. FRACTIONAL, NUMBER, LETTER AND METRIC SIZES (CONT'D)

Diameter of Drill						Flute Length		Overall Length	
D				Decimal Inch Equivalent	Millimeter Equivalent	F		L	
Fraction	No.	Ltr.	mm			Inch	mm	Inch	mm
	34			0.1110	2.819	7/8	22	1 7/8	48
	33			0.1130	2.870	7/8	22	1 7/8	48
			2.90	0.1142	2.900	7/8	22	1 7/8	48
	32			0.1160	2.946	7/8	22	1 7/8	48
			3.00	0.1181	3.000	7/8	22	1 7/8	48
	31			0.1200	3.048	7/8	22	1 7/8	48
			3.10	0.1220	3.100	7/8	22	1 7/8	48
1/8				0.1250	3.175	7/8	22	1 7/8	48
			3.20	0.1260	3.200	15/16	24	1 15/16	49
	30			0.1285	3.264	15/16	24	1 15/16	49
			3.30	0.1299	3.300	15/16	24	1 15/16	49
			3.40	0.1339	3.400	15/16	24	1 15/16	49
	29			0.1360	3.454	15/16	24	1 15/16	49
			3.50	0.1378	3.500	15/16	24	1 15/16	49
	28			0.1405	3.569	15/16	24	1 15/16	49
9/64				0.1406	3.571	15/16	24	1 15/16	49
			3.60	0.1417	3.600	1	25	2 1/16	52
	27			0.1440	3.658	1	25	2 1/16	52
			3.70	0.1457	3.700	1	25	2 1/16	52
	26			0.1470	3.734	1	25	2 1/16	52
	25			0.1495	3.797	1	25	2 1/16	52
			3.80	0.1496	3.800	1	25	2 1/16	52
	24			0.1520	3.861	1	25	2 1/16	52
			3.90	0.1535	3.900	1	25	2 1/16	52
	23			0.1540	3.912	1	25	2 1/16	52
5/32				0.1562	3.967	1	25	2 1/16	52
	22			0.1570	3.988	1 1/16	27	2 1/8	54
			4.00	0.1575	4.000	1 1/16	27	2 1/8	54
	21			0.1590	4.039	1 1/16	27	2 1/8	54
	20			0.1610	4.089	1 1/16	27	2 1/8	54
			4.10	0.1614	4.100	1 1/16	27	2 1/8	54
			4.20	0.1654	4.200	1 1/16	27	2 1/8	54
	19			0.1660	4.216	1 1/16	27	2 1/8	54
			4.30	0.1693	4.300	1 1/16	27	2 1/8	54
	18			0.1695	4.305	1 1/16	27	2 1/8	54
11/64				0.1719	4.366	1 1/16	27	2 1/8	54
	17			0.1730	4.394	1 1/8	29	2 3/16	56
			4.40	0.1732	4.400	1 1/8	29	2 3/16	56
	16			0.1770	4.496	1 1/8	29	2 3/16	56
			4.50	0.1772	4.500	1 1/8	29	2 3/16	56

Copyright ASME International
Provided by IHS under license with ASME
No reproduction or networking permitted without license from IHS
Not for Resale

TABLE 3A GENERAL DIMENSIONS OF STRAIGHT SHANK TWIST DRILLS — SCREW MACHINE LENGTH — THROUGH 1 in. (25.4 mm) DIA. FRACTIONAL, NUMBER, LETTER AND METRIC SIZES (CONT'D)

Diameter of Drill						Flute Length		Overall Length	
D				Decimal Inch Equivalent	Millimeter Equivalent	*F*		*L*	
Fraction	No.	Ltr.	mm			Inch	mm	Inch	mm
	15			0.1800	4.572	1 1/8	29	2 3/16	56
			4.60	0.1811	4.600	1 1/8	29	2 3/16	56
	14			0.1820	4.623	1 1/8	29	2 3/16	56
	13		4.70	0.1850	4.700	1 1/8	29	2 3/16	56
3/16				0.1875	4.762	1 1/8	29	2 3/16	56
	12		4.80	0.1890	4.800	1 3/16	30	2 1/4	57
	11			0.1910	4.851	1 3/16	30	2 1/4	57
			4.90	0.1929	4.900	1 3/16	30	2 1/4	57
	10			0.1935	4.915	1 3/16	30	2 1/4	57
	9			0.1960	4.978	1 3/16	30	2 1/4	57
			5.00	0.1969	5.000	1 3/16	30	2 1/4	57
	8			0.1990	5.055	1 3/16	30	2 1/4	57
			5.10	0.2008	5.100	1 3/16	30	2 1/4	57
	7			0.2010	5.105	1 3/16	30	2 1/4	57
13/64				0.2031	5.159	1 3/16	30	2 1/4	57
	6			0.2040	5.182	1 1/4	32	2 3/8	60
			5.20	0.2047	5.200	1 1/4	32	2 3/8	60
	5			0.2055	5.220	1 1/4	32	2 3/8	60
			5.30	0.2087	5.300	1 1/4	32	2 3/8	60
	4			0.2090	5.309	1 1/4	32	2 3/8	60
			5.40	0.2126	5.400	1 1/4	32	2 3/8	60
	3			0.2130	5.410	1 1/4	32	2 3/8	60
			5.50	0.2165	5.500	1 1/4	32	2 3/8	60
7/32				0.2188	5.558	1 1/4	32	2 3/8	60
			5.60	0.2205	5.600	1 5/16	33	2 7/16	62
	2			0.2210	5.613	1 5/16	33	2 7/16	62
			5.70	0.2244	5.700	1 5/16	33	2 7/16	62
	1			0.2280	5.791	1 5/16	33	2 7/16	62
			5.80	0.2283	5.800	1 5/16	33	2 7/16	62
			5.90	0.2323	5.900	1 5/16	33	2 7/16	62
		A		0.2340	5.944	1 5/16	33	2 7/16	62
15/64				0.2344	5.954	1 5/16	33	2 7/16	62
			6.00	0.2362	6.000	1 3/8	35	2 1/2	64
		B		0.2380	6.045	1 3/8	35	2 1/2	64
			6.10	0.2402	6.100	1 3/8	35	2 1/2	64
		C		0.2420	6.147	1 3/8	35	2 1/2	64
			6.20	0.2441	6.200	1 3/8	35	2 1/2	64
		D		0.2460	6.248	1 3/8	35	2 1/2	64
			6.30	0.2480	6.300	1 3/8	35	2 1/2	64
1/4		*E*		0.2500	6.350	1 3/8	35	2 1/2	64

Copyright ASME International
Provided by IHS under license with ASME
No reproduction or networking permitted without license from IHS

Not for Resale

TABLE 3A GENERAL DIMENSIONS OF STRAIGHT SHANK TWIST DRILLS — SCREW MACHINE LENGTH — THROUGH 1 in. (25.4 mm) DIA. FRACTIONAL, NUMBER, LETTER AND METRIC SIZES (CONT'D)

Diameter of Drill						Flute Length		Overall Length	
D				Decimal Inch Equivalent	Millimeter Equivalent	F		L	
Fraction	No.	Ltr.	mm			Inch	mm	Inch	mm
			6.40	0.2520	6.400	1 7/16	37	2 5/8	67
			6.50	0.2559	6.500	1 7/16	37	2 5/8	67
		F		0.2570	6.528	1 7/16	37	2 5/8	67
			6.60	0.2598	6.600	1 7/16	37	2 5/8	67
		G		0.2610	6.629	1 7/16	37	2 5/8	67
			6.70	0.2638	6.700	1 7/16	37	2 5/8	67
17/64				0.2656	6.746	1 7/16	37	2 5/8	67
		H		0.2660	6.756	1 1/2	38	2 11/16	68
			6.80	0.2677	6.800	1 1/2	38	2 11/16	68
			6.90	0.2717	6.900	1 1/2	38	2 11/16	68
		I		0.2720	6.909	1 1/2	38	2 11/16	68
			7.00	0.2756	7.000	1 1/2	38	2 11/16	68
		J		0.2770	7.036	1 1/2	38	2 11/16	68
			7.10	0.2795	7.100	1 1/2	38	2 11/16	68
		K		0.2810	7.137	1 1/2	38	2 11/16	68
9/32				0.2812	7.142	1 1/2	38	2 11/16	68
			7.20	0.2835	7.200	1 9/16	40	2 3/4	70
			7.30	0.2874	7.300	1 9/16	40	2 3/4	70
		L		0.2900	7.366	1 9/16	40	2 3/4	70
			7.40	0.2913	7.400	1 9/16	40	2 3/4	70
		M		0.2950	7.493	1 9/16	40	2 3/4	70
			7.50	0.2953	7.500	1 9/16	40	2 3/4	70
19/64				0.2969	7.541	1 9/16	40	2 3/4	70
			7.60	0.2992	7.600	1 5/8	41	2 13/16	71
		N		0.3020	7.671	1 5/8	41	2 13/16	71
			7.70	0.3031	7.700	1 5/8	41	2 13/16	71
			7.80	0.3071	7.800	1 5/8	41	2 13/16	71
			7.90	0.3110	7.900	1 5/8	41	2 13/16	71
5/16				0.3125	7.938	1 5/8	41	2 13/16	71
			8.00	0.3150	8.000	1 11/16	43	2 15/16	75
		O		0.3160	8.026	1 11/16	43	2 15/16	75
			8.10	0.3189	8.100	1 11/16	43	2 15/16	75
			8.20	0.3228	8.200	1 11/16	43	2 15/16	75
		P		0.3230	8.204	1 11/16	43	2 15/16	75
			8.30	0.3268	8.300	1 11/16	43	2 15/16	75
21/64				0.3281	8.334	1 11/16	43	2 15/16	75
			8.40	0.3307	8.400	1 11/16	43	3	76
		Q		0.3320	8.433	1 11/16	43	3	76
			8.50	0.3346	8.500	1 11/16	43	3	76
			8.60	0.3386	8.600	1 11/16	43	3	76

Copyright ASME International
Provided by IHS under license with ASME
No reproduction or networking permitted without license from IHS
Not for Resale

TABLE 3A GENERAL DIMENSIONS OF STRAIGHT SHANK TWIST DRILLS — SCREW MACHINE LENGTH — THROUGH 1 in. (25.4 mm) DIA. FRACTIONAL, NUMBER, LETTER AND METRIC SIZES (CONT'D)

Diameter of Drill						Flute Length		Overall Length	
D				Decimal Inch Equivalent	Millimeter Equivalent	F		L	
Fraction	No.	Ltr.	mm			Inch	mm	Inch	mm
		R		0.3390	8.611	1 11/16	43	3	76
			8.70	0.3425	8.700	1 11/16	43	3	76
11/32				0.3438	8.733	1 11/16	43	3	76
			8.80	0.3465	8.800	1 3/4	44	3 1/16	78
		S		0.3480	8.839	1 3/4	44	3 1/16	78
			8.90	0.3504	8.900	1 3/4	44	3 1/16	78
			9.00	0.3543	9.000	1 3/4	44	3 1/16	78
		T		0.3580	9.093	1 3/4	44	3 1/16	78
			9.10	0.3583	9.100	1 3/4	44	3 1/16	78
23/64				0.3594	9.129	1 3/4	44	3 1/16	78
			9.20	0.3622	9.200	1 13/16	46	3 1/8	79
			9.30	0.3661	9.300	1 13/16	46	3 1/8	79
		U		0.3680	9.347	1 13/16	46	3 1/8	79
			9.40	0.3701	9.400	1 13/16	46	3 1/8	79
			9.50	0.3740	9.500	1 13/16	46	3 1/8	79
3/8				0.3750	9.525	1 13/16	46	3 1/8	79
		V		0.3770	9.576	1 7/8	48	3 1/4	83
			9.60	0.3780	9.600	1 7/8	48	3 1/4	83
			9.70	0.3819	9.700	1 7/8	48	3 1/4	83
			9.80	0.3858	9.800	1 7/8	48	3 1/4	83
		W		0.3860	9.804	1 7/8	48	3 1/4	83
			9.90	0.3898	9.900	1 7/8	48	3 1/4	83
25/64				0.3906	9.921	1 7/8	48	3 1/4	83
			10.00	0.3937	10.000	1 15/16	49	3 5/16	84
		X		0.3970	10.084	1 15/16	49	3 5/16	84
			10.20	0.4016	10.200	1 15/16	49	3 5/16	84
		Y		0.4040	10.262	1 15/16	49	3 5/16	84
13/32				0.4062	10.320	1 15/16	49	3 5/16	84
		Z		0.4130	10.490	2	51	3 3/8	86
			10.50	0.4134	10.500	2	51	3 3/8	86
27/64				0.4219	10.716	2	51	3 3/8	86
			10.80	0.4252	10.800	2 1/16	52	3 7/16	87
			11.00	0.4331	11.000	2 1/16	52	3 7/16	87
7/16				0.4375	11.112	2 1/16	52	3 7/16	87
			11.20	0.4409	11.200	2 1/8	54	3 9/16	90
			11.50	0.4528	11.500	2 1/8	54	3 9/16	90
29/64				0.4531	11.509	2 1/8	54	3 9/16	90
			11.80	0.4646	11.800	2 1/8	54	3 5/8	92
15/32				0.4688	11.908	2 1/8	54	3 5/8	92
			12.00	0.4724	12.000	2 3/16	56	3 11/16	94

Copyright ASME International
Provided by IHS under license with ASME
No reproduction or networking permitted without license from IHS
Not for Resale

TABLE 3A GENERAL DIMENSIONS OF STRAIGHT SHANK TWIST DRILLS — SCREW MACHINE LENGTH — THROUGH 1 in. (25.4 mm) DIA. FRACTIONAL, NUMBER, LETTER AND METRIC SIZES (CONT'D)

Diameter of Drill						Flute Length		Overall Length	
D				Decimal Inch Equivalent	Millimeter Equivalent	F		L	
Fraction	No.	Ltr.	mm			Inch	mm	Inch	mm
			12.20	0.4803	12.200	2 3/16	56	3 11/16	94
31/64				0.4844	12.304	2 3/16	56	3 11/16	94
			12.50	0.4921	12.500	2 1/4	57	3 3/4	95
1/2				0.5000	12.700	2 1/4	57	3 3/4	95
			12.80	0.5039	12.800	2 3/8	60	3 7/8	98
			13.00	0.5118	13.000	2 3/8	60	3 7/8	98
33/64				0.5156	13.096	2 3/8	60	3 7/8	98
			13.20	0.5197	13.200	2 3/8	60	3 7/8	98
17/32				0.5312	13.492	2 3/8	60	3 7/8	98
			13.50	0.5315	13.500	2 3/8	60	3 7/8	98
			13.80	0.5433	13.800	2 1/2	64	4	102
35/64				0.5469	13.891	2 1/2	64	4	102
			14.00	0.5512	14.000	2 1/2	64	4	102
			14.25	0.5610	14.250	2 1/2	64	4	102
9/16				0.5625	14.288	2 1/2	64	4	102
			14.50	0.5709	14.500	2 5/8	67	4 1/8	105
37/64				0.5781	14.684	2 5/8	67	4 1/8	105
			14.75	0.5807	14.750	2 5/8	67	4 1/8	105
			15.00	0.5906	15.000	2 5/8	67	4 1/8	105
19/32				0.5938	15.083	2 5/8	67	4 1/8	105
			15.25	0.6004	15.250	2 3/4	70	4 1/4	108
39/64				0.6094	15.479	2 3/4	70	4 1/4	108
			15.50	0.6102	15.500	2 3/4	70	4 1/4	108
			15.75	0.6201	15.750	2 3/4	70	4 1/4	108
5/8				0.6250	15.815	2 3/4	70	4 1/4	108
			16.00	0.6299	16.000	2 7/8	73	4 1/2	114
			16.25	0.6398	16.250	2 7/8	73	4 1/2	114
41/64				0.6406	16.271	2 7/8	73	4 1/2	114
			16.50	0.6496	16.500	2 7/8	73	4 1/2	114
21/32				0.6562	16.667	2 7/8	73	4 1/2	114
			16.75	0.6594	16.750	2 7/8	73	4 5/8	117
			17.00	0.6693	17.000	2 7/8	73	4 5/8	117
43/64				0.6719	17.066	2 7/8	73	4 5/8	117
			17.25	0.6791	17.250	2 7/8	73	4 5/8	117
11/16				0.6875	17.462	2 7/8	73	4 5/8	117
			17.50	0.6890	17.500	3	76	4 3/4	121
45/64				0.7031	17.859	3	76	4 3/4	121
			18.00	0.7087	18.000	3	76	4 3/4	121
23/32				0.7188	18.258	3	76	4 3/4	121
			18.50	0.7283	18.500	3 1/8	79	5	127

Copyright ASME International
Provided by IHS under license with ASME
No reproduction or networking permitted without license from IHS
Not for Resale

TABLE 3A GENERAL DIMENSIONS OF STRAIGHT SHANK TWIST DRILLS — SCREW MACHINE LENGTH — THROUGH 1 in. (25.4 mm) DIA. FRACTIONAL, NUMBER, LETTER AND METRIC SIZES (CONT'D)

Diameter of Drill						Flute Length		Overall Length	
D				Decimal Inch Equivalent	Millimeter Equivalent	*F*		*L*	
Fraction	No.	Ltr.	mm			Inch	mm	Inch	mm
47/64				0.7344	18.654	3 1/8	79	5	127
			19.00	0.7480	19.000	3 1/8	79	5	127
3/4				0.7500	19.050	3 1/8	79	5	127
49/64				0.7656	19.446	3 1/4	83	5 1/8	130
			19.50	0.7677	19.500	3 1/4	83	5 1/8	130
25/32				0.7812	19.845	3 1/4	83	5 1/8	130
			20.00	0.7874	20.000	3 3/8	86	5 1/4	133
51/64				0.7969	20.241	3 3/8	86	5 1/4	133
			20.50	0.8071	20.500	3 3/8	86	5 1/4	133
13/16				0.8125	20.638	3 3/8	86	5 1/4	133
			21.00	0.8268	21.000	3 1/2	89	5 3/8	137
53/64				0.8281	21.034	3 1/2	89	5 3/8	137
27/32				0.8438	21.433	3 1/2	89	5 3/8	137
			21.50	0.8465	21.500	3 1/2	89	5 1/2	140
55/64				0.8594	21.829	3 1/2	89	5 1/2	140
			22.00	0.8661	22.000	3 1/2	89	5 1/2	140
7/8				0.8750	22.225	3 1/2	89	5 1/2	140
			22.50	0.8858	22.500	3 5/8	92	5 5/8	143
57/64				0.8906	22.621	3 5/8	92	5 5/8	143
			23.00	0.9055	23.000	3 5/8	92	5 5/8	143
29/32				0.9062	23.017	3 5/8	92	5 5/8	143
59/64				0.9219	23.416	3 3/4	95	5 3/4	146
			23.50	0.9252	23.500	3 3/4	95	5 3/4	146
15/16				0.9375	23.812	3 3/4	95	5 3/4	146
			24.00	0.9449	24.000	3 7/8	98	5 7/8	149
61/64				0.9531	24.209	3 7/8	98	5 7/8	149
			24.50	0.9646	24.500	3 7/8	98	5 7/8	149
31/32				0.9688	24.608	3 7/8	98	5 7/8	149
			25.00	0.9843	25.000	4	102	6	152
63/64				0.9844	25.004	4	102	6	152
1				1.0000	25.400	4	102	6	152

Copyright ASME International
Provided by IHS under license with ASME
No reproduction or networking permitted without license from IHS
Not for Resale

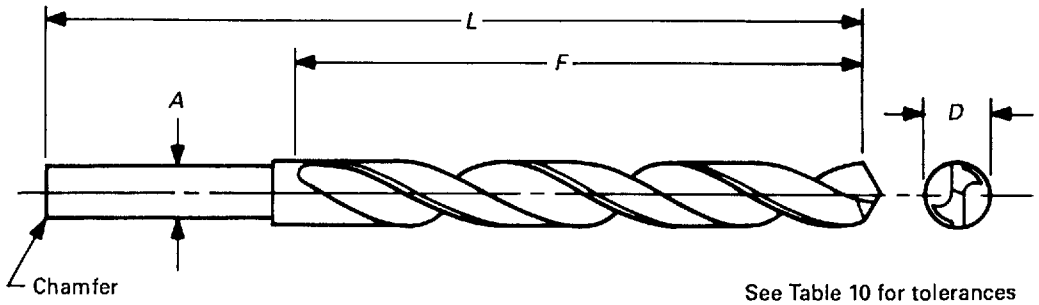

See Table 10 for tolerances

TABLE 3B GENERAL DIMENSIONS OF STRAIGHT SHANK TWIST DRILLS — SCREW MACHINE LENGTH — OVER 1 in. (25.4 mm) DIA. FRACTIONAL AND METRIC SIZES

Diameter of Drill				Flute Length		Overall Length		Shank Diameter	
D		Decimal Inch Equivalent	Millimeter Equivalent	F		L		A	
Frac.	mm			Inch	mm	Inch	mm	Decimal Inch	mm
	25.50	1.0039	25.500	4	102	6 1/4	159	0.9843	25.00
	26.00	1.0236	26.000	4	102	6 1/4	159	0.9843	25.00
1 1/16		1.0625	26.988	4	102	6 1/4	159	1.0000	25.40
	28.00	1.1024	28.000	4	102	6 3/8	162	0.9843	25.00
1 1/8		1.1250	28.575	4	102	6 3/8	162	1.0000	25.40
	30.00	1.1811	30.000	4 1/4	108	6 5/8	168	0.9843	25.00
1 3/16		1.1875	30.162	4 1/4	108	6 5/8	168	1.0000	25.40
1 1/4		1.2500	31.750	4 3/8	111	6 3/4	171	1.0000	25.40
	32.00	1.2598	32.000	4 3/8	111	7	178	1.2402	31.50
1 5/16		1.3125	33.338	4 3/8	111	7	178	1.2500	31.75
	34.00	1.3386	34.000	4 1/2	114	7 1/8	181	1.2402	31.50
1 3/8		1.3750	34.925	4 1/2	114	7 1/8	181	1.2500	31.75
	36.00	1.4173	36.000	4 3/4	121	7 3/8	187	1.2402	31.50
1 7/16		1.4375	36.512	4 3/4	121	7 3/8	187	1.2500	31.75
	38.00	1.4961	38.000	4 7/8	124	7 1/2	190	1.2402	31.50
1 1/2		1.5000	38.100	4 7/8	124	7 1/2	190	1.2500	31.75
1 9/16		1.5625	39.688	4 7/8	124	7 3/4	197	1.5000	38.10
	40.00	1.5748	40.000	4 7/8	124	7 3/4	197	1.4961	38.00
1 5/8		1.6250	41.275	4 7/8	124	7 3/4	197	1.5000	38.10
	42.00	1.6535	42.000	5 1/8	130	8	203	1.4961	38.00
1 11/16		1.6875	42.862	5 1/8	130	8	203	1.5000	38.10
	44.00	1.7323	44.000	5 1/8	130	8	203	1.4961	38.00
1 3/4		1.7500	44.450	5 1/8	130	8	203	1.5000	38.10
	46.00	1.8110	46.000	5 3/8	137	8 1/4	210	1.4961	38.00
1 13/16		1.8125	46.038	5 3/8	137	8 1/4	210	1.5000	38.10
1 7/8		1.8750	47.625	5 3/8	137	8 1/4	210	1.5000	38.10
	48.00	1.8898	48.000	5 5/8	143	8 1/2	216	1.4961	38.00
1 15/16		1.9375	49.212	5 5/8	143	8 1/2	216	1.5000	38.10
	50.00	1.9685	50.000	5 5/8	143	8 1/2	216	1.4961	38.00
2		2.0000	50.800	5 5/8	143	8 1/2	216	1.5000	38.10

Copyright ASME International
Provided by IHS under license with ASME
No reproduction or networking permitted without license from IHS
Not for Resale

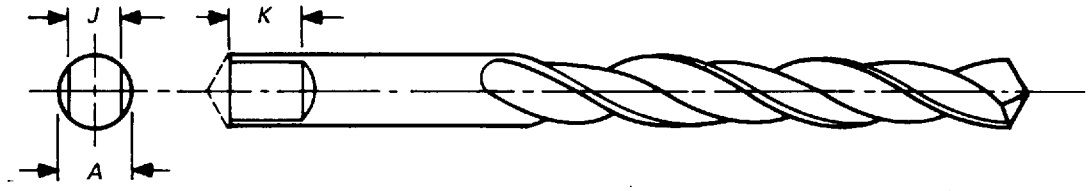

TABLE 4 GENERAL DIMENSIONS OF TANGS FOR STRAIGHT SHANK DRILLS[1]

Nominal Diameter of Drill Shank				Thickness of Tang, J				Length of Tang, K	
A				Inches		Millimeters		K	
Inches		Millimeters		Max.	Min.	Max.	Min.	Inches	Millimeters
1/8	through 3/16	3.18	through 4.76	0.094	0.090	2.39	2.29	9/32	7.0
Over 3/16	through 1/4	Over 4.76	through 6.35	0.122	0.118	3.10	3.00	5/16	8.0
Over 1/4	through 5/16	Over 6.35	through 7.94	0.162	0.158	4.11	4.01	11/32	8.5
Over 5/16	through 3/8	Over 7.94	through 9.53	0.203	0.199	5.16	5.06	3/8	9.5
Over 3/8	through 15/32	Over 9.53	through 11.91	0.243	0.239	6.17	6.07	7/16	11.0
Over 15/32	through 9/16	Over 11.91	through 14.29	0.303	0.297	7.70	7.55	1/2	12.5
Over 9/16	through 21/32	Over 14.29	through 16.67	0.373	0.367	9.47	9.32	9/16	14.5
Over 21/32	through 3/4	Over 16.67	through 19.05	0.443	0.437	11.25	11.10	5/8	16.0
Over 3/4	through 7/8	Over 19.05	through 22.23	0.514	0.508	13.05	12.90	11/16	17.5
Over 7/8	through 1	Over 22.23	through 25.40	0.609	0.601	15.47	15.27	3/4	19.0
Over 1	through 1 3/16	Over 25.40	through 30.16	0.700	0.692	17.78	17.58	13/16	20.5
Over 1 3/16	through 1 3/8	Over 30.16	through 34.93	0.817	0.809	20.75	20.55	7/8	22.0

NOTE:
(1) To fit split sleeve collet type drill drivers, see ANSI B94.35.

Concentricity of Tang

Thickness of Tang (T)		Total Indicator Variation (T.I.V.)[1]	
Inches	Millimeters	Inches	Millimeters
From 0.090 through 0.243	From 2.29 through 6.17	0.006	0.16
Over 0.243 through 0.443	Over 6.17 through 11.25	0.007	0.18
Over 0.443 through 0.609	Over 11.25 through 15.47	0.008	0.21
Over 0.609 through 0.817	Over 15.47 through 20.75	0.009	0.23

NOTE:
(1) Method of measurement: Place shank of drill in V-block, level the tang surface. Set the tip of the dial indicator on the tang and set the indicator to zero. Rotate the drill 180 deg. and note the indicator reading.

Copyright ASME International
Provided by IHS under license with ASME
No reproduction or networking permitted without license from IHS
Not for Resale

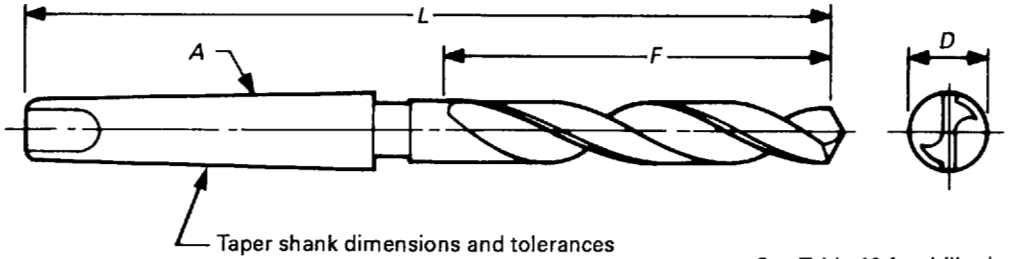

Taper shank dimensions and tolerances in accordance with American National Standard B5.10, Machine Tapers.

See Table 10 for drill tolerances

TABLE 5 GENERAL DIMENSIONS OF TAPER SHANK TWIST DRILLS FRACTIONAL AND METRIC SIZES

Diameter of Drill				Regular Shank (Note 1)				
				Morse Taper Number	Flute Length		Overall Length	
D		Decimal Inch Equivalent	Millimeter Equivalent	A	F		L	
Fraction	Millimeters				Inch	Millimeters	Inch	Millimeters
	3.00	0.1181	3.000	1	1 7/8	48	5 1/8	130
1/8		0.1250	3.175	1	1 7/8	48	5 1/8	130
	3.20	0.1260	3.200	1	2 1/8	54	5 3/8	137
	3.50	0.1378	3.500	1	2 1/8	54	5 3/8	137
9/64		0.1406	3.571	1	2 1/8	54	5 3/8	137
	3.80	0.1496	3.800	1	2 1/8	54	5 3/8	137
5/32		0.1562	3.967	1	2 1/8	54	5 3/8	137
	4.00	0.1575	4.000	1	2 1/2	64	5 3/4	146
	4.20	0.1654	4.200	1	2 1/2	64	5 3/4	146
11/64		0.1719	4.366	1	2 1/2	64	5 3/4	146
	4.50	0.1772	4.500	1	2 1/2	64	5 3/4	146
3/16		0.1875	4.762	1	2 1/2	64	5 3/4	146
	4.80	0.1890	4.800	1	2 3/4	70	6	152
	5.00	0.1969	5.000	1	2 3/4	70	6	152
13/64		0.2031	5.159	1	2 3/4	70	6	152
	5.20	0.2047	5.200	1	2 3/4	70	6	152
	5.50	0.2165	5.500	1	2 3/4	70	6	152
7/32		0.2188	5.558	1	2 3/4	70	6	152
	5.80	0.2283	5.800	1	2 7/8	73	6 1/8	156
15/64		0.2344	5.954	1	2 7/8	73	6 1/8	156
	6.00	0.2362	6.000	1	2 7/8	73	6 1/8	156
	6.20	0.2441	6.200	1	2 7/8	73	6 1/8	156
1/4		0.2500	6.350	1	2 7/8	73	6 1/8	156
	6.50	0.2559	6.500	1	3	76	6 1/4	159
17/64		0.2656	6.746	1	3	76	6 1/4	159
	6.80	0.2677	6.800	1	3	76	6 1/4	159
	7.00	0.2756	7.000	1	3	76	6 1/4	159
9/32		0.2812	7.142	1	3	76	6 1/4	159
	7.20	0.2835	7.200	1	3 1/8	79	6 3/8	162
	7.50	0.2953	7.500	1	3 1/8	79	6 3/8	162

NOTE:
(1) No shanks smaller or larger than regular are used for these sizes.

Copyright ASME International
Provided by IHS under license with ASME
No reproduction or networking permitted without license from IHS

Not for Resale

TABLE 5 GENERAL DIMENSIONS OF TAPER SHANK TWIST DRILLS FRACTIONAL AND METRIC SIZES (CONT'D)

Diameter of Drill				Regular Shank				
D		Decimal Inch Equivalent	Millimeter Equivalent	Morse Taper Number	Flute Length *F*		Overall Length *L*	
Fraction	Millimeters			*A*	Inch	Millimeters	Inch	Millimeters
19/64		0.2969	7.541	1	3 1/8	79	6 3/8	162
	7.80	0.3071	7.800	1	3 1/8	79	6 3/8	162
5/16		0.3125	7.938	1	3 1/8	79	6 3/8	162
	8.00	0.3150	8.000	1	3 1/4	83	6 1/2	165
	8.20	0.3228	8.200	1	3 1/4	83	6 1/2	165
21/64		0.3281	8.334	1	3 1/4	83	6 1/2	165
	8.50	0.3346	8.500	1	3 1/4	83	6 1/2	165
11/32		0.3438	8.733	1	3 1/4	83	6 1/2	165
	8.80	0.3465	8.800	1	3 1/2	89	6 3/4	171
	9.00	0.3543	9.000	1	3 1/2	89	6 3/4	171
23/64		0.3594	9.129	1	3 1/2	89	6 3/4	171
	9.20	0.3622	9.200	1	3 1/2	89	6 3/4	171
	9.50	0.3740	9.500	1	3 1/2	89	6 3/4	171
3/8		0.3750	9.525	1	3 1/2	89	6 3/4	171
	9.80	0.3858	9.800	1	3 5/8	92	7	178
25/64		0.3906	9.921	1	3 5/8	92	7	178
	10.00	0.3937	10.000	1	3 5/8	92	7	178
	10.20	0.4016	10.200	1	3 5/8	92	7	178
13/32		0.4063	10.319	1	3 5/8	92	7	178
	10.50	0.4134	10.500	1	3 7/8	98	7 1/4	184
27/64		0.4219	10.716	1	3 7/8	98	7 1/4	184
	10.80	0.4252	10.800	1	3 7/8	98	7 1/4	184
	11.00	0.4331	11.000	1	3 7/8	98	7 1/4	184
7/16		0.4375	11.112	1	3 7/8	98	7 1/4	184
	11.20	0.4409	11.200	1	4 1/8	105	7 1/2	190
	11.50	0.4528	11.500	1	4 1/8	105	7 1/2	190
29/64		0.4531	11.509	1	4 1/8	105	7 1/2	190
	11.80	0.4646	11.800	1	4 1/8	105	7 1/2	190
15/32		0.4688	11.908	1	4 1/8	105	7 1/2	190
	12.00	0.4724	12.000	2	4 3/8	111	8 1/4	210
	12.20	0.4803	12.200	2	4 3/8	111	8 1/4	210
31/64		0.4844	12.304	2	4 3/8	111	8 1/4	210
	12.50	0.4921	12.500	2	4 3/8	111	8 1/4	210
1/2		0.5000	12.700	2	4 3/8	111	8 1/4	210
	12.80	0.5039	12.800	2	4 5/8	117	8 1/2	216
	13.00	0.5118	13.000	2	4 5/8	117	8 1/2	216
33/64		0.5156	13.096	2	4 5/8	117	8 1/2	216
	13.20	0.5197	13.200	2	4 5/8	117	8 1/2	216
17/32		0.5312	13.492	2	4 5/8	117	8 1/2	216
	13.50	0.5315	13.500	2	4 5/8	117	8 1/2	216

Copyright ASME International
Provided by IHS under license with ASME
No reproduction or networking permitted without license from IHS
Not for Resale

TABLE 5 GENERAL DIMENSIONS OF TAPER SHANK TWIST DRILLS FRACTIONAL AND METRIC SIZES (CONT'D)

Shank Smaller Than Regular					Shank Larger Than Regular				
Morse Taper Number	Flute Length		Overall Length		Morse Taper Number	Flute Length		Overall Length	
	F		*L*			*F*		*L*	
A	Inch	Millimeters	Inch	Millimeters	*A*	Inch	Millimeters	Inch	Millimeters
...	...	...	...	...	...	...	...	...	...
...	...	...	...	...	...	...	...	...	...
...	...	...	...	...	...	...	...	...	...
...	...	...	...	...	...	...	...	...	...
...	...	...	...	...	...	...	...	...	...
...	...	...	...	...	...	...	...	...	...
...	...	...	...	...	...	...	...	...	...
...	...	...	...	...	...	...	...	...	...
...	...	...	...	...	...	...	...	...	...
...	...	...	...	...	...	...	...	...	...
...	...	...	...	...	...	...	...	...	...
...	...	...	...	...	...	...	...	...	...
...	...	...	...	...	...	...	...	...	...
...	...	...	...	...	2	3 1/2	89	7 3/8	187
...	...	...	...	...	...	...	...	...	...
...	...	...	...	...	2	3 5/8	92	7 1/2	190
...	...	...	...	...	...	...	...	...	...
...	...	...	...	...	...	...	...	...	...
...	...	...	...	...	2	3 5/8	92	7 1/2	190
...	...	...	...	...	...	...	...	...	...
...	...	...	...	...	2	3 7/8	98	7 3/4	197
...	...	...	...	...	...	...	...	...	...
...	...	...	...	...	...	...	...	...	...
...	...	...	...	...	2	3 7/8	98	7 3/4	197
...	...	...	...	...	...	...	...	...	...
...	...	...	...	...	...	...	...	...	...
...	...	...	...	...	2	4 1/8	105	8	203
...	...	...	...	...	...	...	...	...	...
...	...	...	...	...	2	4 1/8	105	8	203
1	4 3/8	111	7 3/4	197	...	...	...	...	...
1	4 3/8	111	7 3/4	197	...	...	...	...	...
1	4 3/8	111	7 3/4	197	...	...	...	...	...
1	4 3/8	111	7 3/4	197	...	...	...	...	...
1	4 3/8	111	7 3/4	197	...	...	...	...	...
1	4 5/8	117	8	203	...	...	...	...	...
1	4 5/8	117	8	203	...	...	...	...	...
1	4 5/8	117	8	203	...	...	...	...	...
1	4 5/8	117	8	203	...	...	...	...	...
1	4 5/8	117	8	203	...	...	...	...	...
1	4 5/8	117	8	203	...	...	...	...	...

Copyright ASME International
Provided by IHS under license with ASME
No reproduction or networking permitted without license from IHS

Not for Resale

TABLE 5 GENERAL DIMENSIONS OF TAPER SHANK TWIST DRILLS FRACTIONAL AND METRIC SIZES (CONT'D)

Diameter of Drill				Regular Shank				
					Flute Length		Overall Length	
D		Decimal Inch Equivalent	Millimeter Equivalent	Morse Taper Number	F		L	
Fraction	Millimeters			A	Inch	Millimeters	Inch	Millimeters
	13.80	0.5433	13.800	2	4 7/8	124	8 3/4	222
35/64		0.5469	13.891	2	4 7/8	124	8 3/4	222
	14.00	0.5512	14.000	2	4 7/8	124	8 3/4	222
	14.25	0.5610	14.250	2	4 7/8	124	8 3/4	222
9/16		0.5625	14.288	2	4 7/8	124	8 3/4	222
	14.50	0.5709	14.500	2	4 7/8	124	8 3/4	222
37/64		0.5781	14.684	2	4 7/8	124	8 3/4	222
	14.75	0.5807	14.750	2	4 7/8	124	8 3/4	222
	15.00	0.5906	15.000	2	4 7/8	124	8 3/4	222
19/32		0.5938	15.083	2	4 7/8	124	8 3/4	222
	15.25	0.6004	15.250	2	4 7/8	124	8 3/4	222
39/64		0.6094	15.479	2	4 7/8	124	8 3/4	222
	15.50	0.6102	15.500	2	4 7/8	124	8 3/4	222
	15.75	0.6201	15.750	2	4 7/8	124	8 3/4	222
5/8		0.6250	15.815	2	4 7/8	124	8 3/4	222
	16.00	0.6299	16.000	2	5 1/8	130	9	229
	16.25	0.6398	16.250	2	5 1/8	130	9	229
41/64		0.6406	16.271	2	5 1/8	130	9	229
	16.50	0.6496	16.500	2	5 1/8	130	9	229
21/32		0.6562	16.667	2	5 1/8	130	9	229
	16.75	0.6594	16.750	2	5 3/8	137	9 1/4	235
	17.00	0.6693	17.000	2	5 3/8	137	9 1/4	235
43/64		0.6719	17.066	2	5 3/8	137	9 1/4	235
	17.25	0.6791	17.250	2	5 3/8	137	9 1/4	235
11/16		0.6875	17.462	2	5 3/8	137	9 1/4	235
	17.50	0.6880	17.500	2	5 5/8	143	9 1/2	241
45/64		0.7031	17.859	2	5 5/8	143	9 1/2	241
	18.00	0.7087	18.000	2	5 5/8	143	9 1/2	241
23/32		0.7188	18.258	2	5 5/8	143	9 1/2	241
	18.50	0.7283	18.500	2	5 7/8	149	9 3/4	248
47/64		0.7344	18.654	2	5 7/8	149	9 3/4	248
	19.00	0.7480	19.000	2	5 7/8	149	9 3/4	248
3/4		0.7500	19.050	2	5 7/8	149	9 3/4	248
49/64		0.7656	19.446	2	6	152	9 7/8	251
	19.50	0.7677	19.500	2	6	152	9 7/8	251
25/32		0.7812	19.843	2	6	152	9 7/8	251
	20.00	0.7874	20.000	3	6 1/8	156	10 3/4	273
51/64		0.7969	20.241	3	6 1/8	156	10 3/4	273
	20.50	0.8071	20.500	3	6 1/8	156	10 3/4	273
13/16		0.8125	20.638	3	6 1/8	156	10 3/4	273

Copyright ASME International
Provided by IHS under license with ASME
No reproduction or networking permitted without license from IHS
Not for Resale

TABLE 5 GENERAL DIMENSIONS OF TAPER SHANK TWIST DRILLS FRACTIONAL AND METRIC SIZES (CONT'D)

Shank Smaller Than Regular					Shank Larger Than Regular				
Morse Taper Number	Flute Length F		Overall Length L		Morse Taper Number	Flute Length F		Overall Length L	
A	Inch	Millimeters	Inch	Millimeters	A	Inch	Millimeters	Inch	Millimeters
1	4 7/8	124	8 1/4	210	...	...	...	...	...
1	4 7/8	124	8 1/4	210	...	...	...	...	...
1	4 7/8	124	8 1/4	210	...	...	...	...	...
1	4 7/8	124	8 1/4	210	...	...	...	...	...
1	4 7/8	124	8 1/4	210	...	...	...	...	...
...	...	...	...	...	...	...	...	...	...
...	...	...	...	...	...	...	...	...	...
...	...	...	...	...	...	...	...	...	...
...	...	...	...	...	...	...	...	...	...
...	...	...	...	...	...	...	...	...	...
...	...	...	...	...	...	...	...	...	...
...	...	...	...	...	...	...	...	...	...
...	...	...	...	...	...	...	...	...	...
...	...	...	...	...	...	...	...	...	...
...	...	...	...	...	...	...	...	...	...
...	...	...	...	...	...	...	...	...	...
...	...	...	...	...	...	...	...	...	...
...	...	...	...	...	3	5 1/8	130	9 3/4	248
...	...	...	...	...	...	...	...	...	...
...	...	...	...	...	3	5 1/8	130	9 3/4	248
...	...	...	...	...	...	...	...	...	...
...	...	...	...	...	...	...	...	...	...
...	...	...	...	...	3	5 3/8	137	10	254
...	...	...	...	...	...	...	...	...	...
...	...	...	...	...	3	5 3/8	137	10	254
...	...	...	...	...	...	...	...	...	...
...	...	...	...	...	3	5 5/8	143	10 1/4	260
...	...	...	...	...	...	...	...	...	...
...	...	...	...	...	3	5 5/8	143	10 1/4	260
...	...	...	...	...	...	...	...	...	...
...	...	...	...	...	3	5 7/8	149	10 1/2	267
...	...	...	...	...	...	...	...	...	...
...	...	...	...	...	3	5 7/8	149	10 1/2	267
...	...	...	...	...	3	6	152	10 5/8	270
...	...	...	...	...	...	...	...	...	...
...	...	...	...	...	3	6	152	10 5/8	270
2	6 1/8	156	10	254	...	...	...	...	...
2	6 1/8	156	10	254	...	...	...	...	...
2	6 1/8	156	10	254	...	...	...	...	...
2	6 1/8	156	10	254	...	...	...	...	...

Copyright ASME International
Provided by IHS under license with ASME
No reproduction or networking permitted without license from IHS

Not for Resale

TABLE 5 GENERAL DIMENSIONS OF TAPER SHANK TWIST DRILLS FRACTIONAL AND METRIC SIZES (CONT'D)

Diameter of Drill				Regular Shank				
	D	Decimal Inch Equivalent	Millimeter Equivalent	Morse Taper Number	Flute Length *F*		Overall Length *L*	
Fraction	Millimeters			*A*	Inch	Millimeters	Inch	Millimeters
	21.00	0.8268	21.000	3	6 1/8	156	10 3/4	273
53/64		0.8281	21.034	3	6 1/8	156	10 3/4	273
27/32		0.8438	21.433	3	6 1/8	156	10 3/4	273
	21.50	0.8465	21.500	3	6 1/8	156	10 3/4	273
55/64		0.8594	21.829	3	6 1/8	156	10 3/4	273
	22.00	0.8661	22.000	3	6 1/8	156	10 3/4	273
7/8		0.8750	22.225	3	6 1/8	156	10 3/4	273
	22.50	0.8858	22.500	3	6 1/8	156	10 3/4	273
57/64		0.8906	22.621	3	6 1/8	156	10 3/4	273
	23.00	0.9055	23.000	3	6 1/8	156	10 3/4	273
29/32		0.9062	23.017	3	6 1/8	156	10 3/4	273
59/64		0.9219	23.416	3	6 1/8	156	10 3/4	273
	23.50	0.9252	23.500	3	6 1/8	156	10 3/4	273
15/16		0.9375	23.862	3	6 1/8	156	10 3/4	273
	24.00	0.9449	24.000	3	6 3/8	162	11	279
61/64		0.9531	24.209	3	6 3/8	162	11	279
	24.50	0.9646	24.500	3	6 3/8	162	11	279
31/32		0.9688	24.608	3	6 3/8	162	11	279
	25.00	0.9843	25.000	3	6 3/8	162	11	279
63/64		0.9844	25.004	3	6 3/8	162	11	279
1		1.0000	25.400	3	6 3/8	162	11	279
	25.50	1.0039	25.500	3	6 1/2	165	11 1/8	283
1 1/64		1.0156	25.796	3	6 1/2	165	11 1/8	283
	26.00	1.0236	26.000	3	6 1/2	165	11 1/8	283
1 1/32		1.0312	26.192	3	6 1/2	165	11 1/8	283
	26.50	1.0433	26.500	3	6 5/8	168	11 1/4	286
1 3/64		1.0469	26.591	3	6 5/8	168	11 1/4	286
1 1/16		1.0625	26.988	3	6 5/8	168	11 1/4	286
	27.00	1.0630	27.000	3	6 5/8	168	11 1/4	286
1 5/64		1.0781	27.384	4	6 7/8	175	12 1/2	318
	27.50	1.0827	27.500	4	6 7/8	175	12 1/2	318
1 3/32		1.0938	27.783	4	6 7/8	175	12 1/2	318
	28.00	1.1024	28.000	4	7 1/8	181	12 3/4	324
1 7/64		1.1094	28.179	4	7 1/8	181	12 3/4	324
	28.50	1.1220	28.500	4	7 1/8	181	12 3/4	324
1 1/8		1.1250	28.575	4	7 1/8	181	12 3/4	324
1 9/64		1.1406	28.971	4	7 1/4	184	12 7/8	327
	29.00	1.1417	29.000	4	7 1/4	184	12 7/8	327
1 5/32		1.1562	29.367	4	7 1/4	184	12 7/8	327
	29.50	1.1614	29.500	4	7 3/8	187	13	330

Copyright ASME International
Provided by IHS under license with ASME
No reproduction or networking permitted without license from IHS

Not for Resale

TABLE 5 GENERAL DIMENSIONS OF TAPER SHANK TWIST DRILLS FRACTIONAL AND METRIC SIZES (CONT'D)

Shank Smaller Than Regular					Shank Larger Than Regular				
Morse Taper Number	Flute Length F		Overall Length L		Morse Taper Number	Flute Length F		Overall Length L	
A	Inch	Millimeters	Inch	Millimeters	A	Inch	Millimeters	Inch	Millimeters
2	6 1/8	156	10	254	...	...	...	...	...
2	6 1/8	156	10	254	...	...	...	...	...
2	6 1/8	156	10	254	...	...	...	...	...
2	6 1/8	156	10	254	...	...	...	...	...
2	6 1/8	156	10	254	...	...	...	...	...
2	6 1/8	156	10	254	...	...	...	...	...
2	6 1/8	156	10	254	...	...	...	...	...
2	6 1/8	156	10	254	...	...	...	...	...
2	6 1/8	156	10	254	...	...	...	...	...
2	6 1/8	156	10	254	...	...	...	...	...
...	...	...	...	...	...	...	...	...	...
...	...	...	...	...	...	...	...	...	...
...	...	...	...	...	...	...	...	...	...
...	...	...	...	...	...	...	...	...	...
...	...	...	...	...	...	...	...	...	...
...	...	...	...	...	...	...	...	...	...
...	...	...	...	...	...	...	...	...	...
...	...	...	...	...	...	...	...	...	...
...	...	...	...	...	...	...	...	...	...
...	...	...	...	...	4	6 3/8	162	12	305
...	...	...	...	...	...	...	...	...	...
...	...	...	...	...	...	...	...	...	...
...	...	...	...	...	...	...	...	...	...
...	...	...	...	...	4	6 1/2	165	12 1/8	308
...	...	...	...	...	...	...	...	...	...
...	...	...	...	...	...	...	...	...	...
...	...	...	...	...	4	6 5/8	168	12 1/4	311
...	...	...	...	...	...	...	...	...	...
3	6 7/8	175	11 1/2	292	...	...	...	...	...
3	6 7/8	175	11 1/2	292	...	...	...	...	...
3	6 7/8	175	11 1/2	292	...	...	...	...	...
3	7 1/8	181	11 3/4	298	...	...	...	...	...
3	7 1/8	181	11 3/4	298	...	...	...	...	...
3	7 1/8	181	11 3/4	298	...	...	...	...	...
3	7 1/8	181	11 3/4	298	...	...	...	...	...
3	7 1/4	184	11 7/8	302	...	...	...	...	...
3	7 1/4	184	11 7/8	302	...	...	...	...	...
3	7 1/4	184	11 7/8	302	...	...	...	...	...
3	7 3/8	187	12	305	...	...	...	...	...

Copyright ASME International
Provided by IHS under license with ASME
No reproduction or networking permitted without license from IHS
Not for Resale

TABLE 5 GENERAL DIMENSIONS OF TAPER SHANK TWIST DRILLS FRACTIONAL AND METRIC SIZES (CONT'D)

Diameter of Drill				Regular Shank				
				Morse Taper Number	Flute Length		Overall Length	
D		Decimal Inch Equivalent	Millimeter Equivalent		F		L	
Fraction	Millimeters			A	Inch	Millimeters	Inch	Millimeters
1 11/64		1.1719	29.766	4	7 3/8	187	13	330
	30.00	1.1811	30.000	4	7 3/8	187	13	330
1 3/16		1.1875	30.162	4	7 3/8	187	13	330
	30.50	1.2008	30.500	4	7 1/2	190	13 1/8	333
1 13/64		1.2031	30.559	4	7 1/2	190	13 1/8	333
1 7/32		1.2188	30.958	4	7 1/2	190	13 1/8	333
	31.00	1.2205	31.000	4	7 7/8	200	13 1/2	343
1 15/64		1.2344	31.354	4	7 7/8	200	13 1/2	343
	31.50	1.2402	31.500	4	7 7/8	200	13 1/2	343
1 1/4		1.2500	31.750	4	7 7/8	200	13 1/2	343
	32.00	1.2598	32.000	4	8 1/2	216	14 1/8	359
1 17/64		1.2656	32.146	4	8 1/2	216	14 1/8	359
	32.50	1.2795	32.500	4	8 1/2	216	14 1/8	359
1 9/32		1.2812	32.542	4	8 1/2	216	14 1/8	359
1 19/64		1.2969	32.941	4	8 5/8	219	14 1/4	362
	33.00	1.2992	33.000	4	8 5/8	219	14 1/4	362
1 5/16		1.3125	33.338	4	8 5/8	219	14 1/4	362
	33.50	1.3189	33.500	4	8 3/4	222	14 3/8	365
1 21/64		1.3281	33.734	4	8 3/4	222	14 3/8	365
	34.00	1.3386	34.000	4	8 3/4	222	14 3/8	365
1 11/32		1.3438	34.133	4	8 3/4	222	14 3/8	365
	34.50	1.3583	34.500	4	8 7/8	225	14 1/2	368
1 23/64		1.3594	34.529	4	8 7/8	225	14 1/2	368
1 3/8		1.3750	34.925	4	8 7/8	225	14 1/2	368
	35.00	1.3780	35.000	4	9	229	14 5/8	371
1 25/64		1.3906	35.321	4	9	229	14 5/8	371
	35.50	1.3976	35.500	4	9	229	14 5/8	371
1 13/32		1.4062	35.717	4	9	229	14 5/8	371
	36.00	1.4173	36.000	4	9 1/8	232	14 3/4	375
1 27/64		1.4219	36.116	4	9 1/8	232	14 3/4	375
	36.50	1.4370	36.500	4	9 1/8	232	14 3/4	375
1 7/16		1.4375	36.512	4	9 1/8	232	14 3/4	375
1 29/64		1.4531	36.909	4	9 1/4	235	14 7/8	378
	37.00	1.4567	37.000	4	9 1/4	235	14 7/8	378
1 15/32		1.4688	37.308	4	9 1/4	235	14 7/8	378
1 31/64	37.50	1.4764	37.500	4	9 3/8	238	15	381
		1.4844	37.704	4	9 3/8	238	15	381
1 1/2	38.00	1.4961	38.000	4	9 3/8	238	15	381
		1.5000	38.100	4	9 3/8	238	15	381
1 33/64		1.5156	38.496	...	...	...	...	...

Copyright ASME International
Provided by IHS under license with ASME
No reproduction or networking permitted without license from IHS
Not for Resale

TABLE 5 GENERAL DIMENSIONS OF TAPER SHANK TWIST DRILLS FRACTIONAL AND METRIC SIZES (CONT'D)

Shank Smaller Than Regular					Shank Larger Than Regular				
Morse Taper Number	Flute Length F		Overall Length L		Morse Taper Number	Flute Length F		Overall Length L	
A	Inch	Millimeters	Inch	Millimeters	A	Inch	Millimeters	Inch	Millimeters
3	7 3/8	187	12	305	...	...	...	...	...
3	7 3/8	187	12	305	...	...	...	...	...
3	7 3/8	187	12	305	...	...	...	...	...
3	7 1/2	190	12 1/8	308	...	...	...	...	...
3	7 1/2	190	12 1/8	308	...	...	...	...	...
3	7 1/2	190	12 1/8	308	...	...	...	...	...
3	7 7/8	200	12 1/2	318	...	...	...	...	...
3	7 7/8	200	12 1/2	318	...	...	...	...	...
3	7 7/8	200	12 1/2	318	...	...	...	...	...
3	7 7/8	200	12 1/2	318	...	...	...	...	...
...	...	...	...	...

TABLE 5 GENERAL DIMENSIONS OF TAPER SHANK TWIST DRILLS FRACTIONAL AND METRIC SIZES (CONT'D)

Diameter of Drill				Regular Shank				
					Flute Length		Overall Length	
D		Decimal Inch Equivalent	Millimeter Equivalent	Morse Taper Number	F		L	
Fraction	Millimeters			A	Inch	Millimeters	Inch	Millimeters
1 17/32		1.5312	38.892	5	9 3/8	238	16 3/8	416
	39.00	1.5354	39.000	5	9 5/8	244	16 5/8	422
1 35/64		1.5469	39.291	...	...	...	...	...
1 9/16		1.5625	39.688	5	9 5/8	244	16 5/8	422
	40.00	1.5748	40.000	5	9 7/8	251	16 7/8	429
1 37/64		1.5781	40.084	...	...	...	...	...
1 19/32		1.5938	40.483	5	9 7/8	251	16 7/8	429
1 39/64		1.6094	40.879	...	...	...	...	...
	41.00	1.6142	41.000	5	10	254	17	432
1 5/8		1.6250	41.275	5	10	254	17	432
1 41/64		1.6406	41.671	...	...	...	...	...
	42.00	1.6535	42.000	5	10 1/8	257	17 1/8	435
1 21/32		1.6562	42.067	5	10 1/8	257	17 1/8	435
1 43/64		1.6719	42.466	...	...	...	...	...
1 11/16		1.6875	42.862	5	10 1/8	257	17 1/8	435
	43.00	1.6929	43.000	5	10 1/8	257	17 1/8	435
1 45/64		1.7031	43.259	...	...	...	...	...
1 23/32		1.7188	43.658	5	10 1/8	257	17 1/8	435
	44.00	1.7323	44.000	5	10 1/8	257	17 1/8	435
1 47/64		1.7344	44.054	...	...	...	...	...
1 3/4		1.7500	44.450	5	10 1/8	257	17 1/8	435
	45.00	1.7717	45.000	5	10 1/8	257	17 1/8	435
1 25/32		1.7812	45.242	5	10 1/8	257	17 1/8	435
	46.00	1.8110	46.000	5	10 1/8	257	17 1/8	435
1 13/16		1.8125	46.038	5	10 1/8	257	17 1/8	435
1 27/32		1.8438	46.833	5	10 1/8	257	17 1/8	435
	47.00	1.8504	47.000	5	10 3/8	264	17 3/8	441
1 7/8		1.8750	47.625	5	10 3/8	264	17 3/8	441
	48.00	1.8898	48.000	5	10 3/8	264	17 3/8	441
1 29/32		1.9062	48.417	5	10 3/8	264	17 3/8	441
	49.00	1.9291	49.000	5	10 3/8	264	17 3/8	441
1 15/16		1.9375	49.212	5	10 3/8	264	17 3/8	441
	50.00	1.9685	50.000	5	10 3/8	264	17 3/8	441
1 31/32		1.9688	50.008	5	10 3/8	264	17 3/8	441
2		2.0000	50.800	5	10 3/8	264	17 3/8	441
	51.00	2.0079	51.000	5	10 3/8	264	17 3/8	441
2 1/32		2.0312	51.592	5	10 3/8	264	17 3/8	441
	52.00	2.0472	52.000	5	10 1/4	260	17 3/8	441
2 1/16		2.0625	52.388	5	10 1/4	260	17 3/8	441
	53.00	2.0866	53.000	5	10 1/4	260	17 3/8	441

Copyright ASME International
Provided by IHS under license with ASME
No reproduction or networking permitted without license from IHS
Not for Resale

TABLE 5 GENERAL DIMENSIONS OF TAPER SHANK TWIST DRILLS FRACTIONAL AND METRIC SIZES (CONT'D)

Shank Smaller Than Regular					Shank Larger Than Regular				
Morse Taper Number	Flute Length F		Overall Length L		Morse Taper Number	Flute Length F		Overall Length L	
A	Inch	Millimeters	Inch	Millimeters	A	Inch	Millimeters	Inch	Millimeters
4	9 3/8	238	15	381	...	...	...	...	...
4	9 5/8	244	15 1/4	387	...	...	...	...	...
4	9 5/8	244	15 1/4	387	...	...	...	...	...
4	9 5/8	244	15 1/4	387	...	...	...	...	...
4	9 7/8	251	15 1/2	394	...	...	...	...	...
4	9 7/8	251	15 1/2	394	...	...	...	...	...
4	9 7/8	251	15 1/2	394	...	...	...	...	...
4	10	254	15 5/8	397	...	...	...	...	...
4	10	254	15 5/8	397	...	...	...	...	...
4	10	254	15 5/8	397	...	...	...	...	...
4	10 1/8	257	15 3/4	400	...	...	...	...	...
4	10 1/8	257	15 3/4	400	...	...	...	...	...
4	10 1/8	257	15 3/4	400	...	...	...	...	...
4	10 1/8	257	15 3/4	400	...	...	...	...	...
4	10 1/8	257	15 3/4	400	...	...	...	...	...
4	10 1/8	257	15 3/4	400	...	...	...	...	...
4	10 1/8	257	15 3/4	400	...	...	...	...	...
4	10 1/8	257	15 3/4	400	...	...	...	...	...
4	10 3/8	264	16 1/4	413	...	...	...	...	...
4	10 3/8	264	16 1/4	413	...	...	...	...	...
4	10 3/8	264	16 1/4	413	...	...	...	...	...
4	10 3/8	264	16 1/4	413	...	...	...	...	...
4	10 3/8	264	16 1/4	413	...	...	...	...	...
4	10 3/8	264	16 1/4	413	...	...	...	...	...
4	10 3/8	264	16 1/4	413	...	...	...	...	...
4	10 1/2	267	16 1/2	419	...	...	...	...	...
4	10 1/2	267	16 1/2	419	...	...	...	...	...
4	10 1/2	267	16 1/2	419	...	...	...	...	...
4	10 1/2	267	16 1/2	419	...	...	...	...	...
4	10 5/8	270	16 5/8	422	...	...	...	...	...
4	10 5/8	270	16 5/8	422	...	...	...	...	...
4	10 5/8	270	16 5/8	422	...	...	...	...	...
4	10 5/8	270	16 5/8	422	...	...	...	...	...
4	10 5/8	270	16 5/8	422	...	...	...	...	...
...	...	...	...	...	...	...	...	...	...
...	...	...	...	...	...	...	...	...	...
...	...	...	...	...	...	...	...	...	...
...	...	...	...	...	...	...	...	...	...
...	...	...	...	...	...	...	...	...	...

Copyright ASME International
Provided by IHS under license with ASME
No reproduction or networking permitted without license from IHS
Not for Resale

TABLE 5 GENERAL DIMENSIONS OF TAPER SHANK TWIST DRILLS FRACTIONAL AND METRIC SIZES (CONT'D)

Diameter of Drill				Regular Shank (Note 1)				
				Morse Taper Number	Flute Length		Overall Length	
D		Decimal Inch Equivalent	Millimeter Equivalent		*F*		*L*	
Fraction	Millimeters			*A*	Inch	Millimeters	Inch	Millimeters
2 3/32		2.0938	53.183	5	10 1/4	260	17 3/8	441
2 1/8		2.1250	53.975	5	10 1/4	260	17 3/8	441
	54.00	2.1260	54.000	5	10 1/4	260	17 3/8	441
2 5/32		2.1562	54.767	5	10 1/4	260	17 3/8	441
	55.00	2.1654	55.000	5	10 1/4	260	17 3/8	441
2 3/16		2.1875	55.512	5	10 1/4	260	17 3/8	441
	56.00	2.2000	56.000	5	10 1/8	257	17 3/8	441
2 7/32		2.2188	56.358	5	10 1/8	257	17 3/8	441
	57.00	2.2441	57.000	5	10 1/8	257	17 3/8	441
2 1/4		2.2500	57.150	5	10 1/8	257	17 3/8	441
	58.00	2.2835	58.000	5	10 1/8	257	17 3/8	441
2 5/16		2.3125	58.738	5	10 1/8	257	17 3/8	441
	59.00	2.3228	59.000	5	10 1/8	257	17 3/8	441
	60.00	2.3622	60.000	5	10 1/8	257	17 3/8	441
2 3/8		2.3750	60.325	5	10 1/8	257	17 3/8	441
	61.00	2.4016	61.000	5	11 1/4	286	18 3/4	476
2 7/16		2.4375	61.912	5	11 1/4	286	18 3/4	476
	62.00	2.4409	62.000	5	11 1/4	286	18 3/4	476
	63.00	2.4803	63.000	5	11 1/4	286	18 3/4	476
2 1/2		2.5000	63.500	5	11 1/4	286	18 3/4	476
	64.00	2.5197	64.000	5	11 7/8	302	19 1/2	495
	65.00	2.5591	65.000	5	11 7/8	302	19 1/2	495
2 9/16		2.5625	65.088	5	11 7/8	302	19 1/2	495
	66.00	2.5984	66.000	5	11 7/8	302	19 1/2	495
2 5/8		2.6250	66.675	5	11 7/8	302	19 1/2	495
	67.00	2.6378	67.000	5	12 3/4	324	20 3/8	518
	68.00	2.6772	68.000	5	12 3/4	324	20 3/8	518
2 11/16		2.6875	68.262	5	12 3/4	324	20 3/8	518
	69.00	2.7165	69.000	5	12 3/4	324	20 3/8	518
2 3/4		2.7500	69.850	5	12 3/4	324	20 3/8	518
	70.00	2.7559	70.000	5	13 3/8	340	21 1/8	537
	71.00	2.7953	71.000	5	13 3/8	340	21 1/8	537
2 13/16		2.8125	71.438	5	13 3/8	340	21 1/8	537
	72.00	2.8346	72.000	5	13 3/8	340	21 1/8	537
	73.00	2.8740	73.000	5	13 3/8	340	21 1/8	537
2 7/8		2.8750	73.025	5	13 3/8	340	21 1/8	537
	74.00	2.9134	74.000	5	14	356	21 3/4	552
2 15/16		2.9375	74.612	5	14	356	21 3/4	552
	75.00	2.9528	75.000	5	14	356	21 3/4	552
	76.00	2.9921	76.000	5	14	356	21 3/4	552

NOTE:
(1) No shanks smaller or larger than regular are used for these sizes.

Copyright ASME International
Provided by IHS under license with ASME
No reproduction or networking permitted without license from IHS
Not for Resale

TABLE 5 GENERAL DIMENSIONS OF TAPER SHANK TWIST DRILLS FRACTIONAL AND METRIC SIZES (CONT'D)

Diameter of Drill				Regular Shank				
D		Decimal Inch Equivalent	Millimeter Equivalent	Morse Taper Number	Flute Length *F*		Overall Length *L*	
Fraction	Millimeters			*A*	Inch	Millimeters	Inch	Millimeters
3		3.0000	76.200	5	14	356	21¾	552
	77.00	3.0315	77.000	6	14⅝	371	24½	622
	78.00	3.0709	78.000	6	14⅝	371	24½	622
3⅛		3.1250	79.375	6	14⅝	371	24½	622
3¼		2.2500	82.550	6	15½	394	25½	648
3½		3.5000	88.900	...	...	...	...	...

TABLE 5 GENERAL DIMENSIONS OF TAPER SHANK TWIST DRILLS FRACTIONAL AND METRIC SIZES (CONT'D)

Diameter of Drill				Shank Smaller Than Regular				
D		Decimal Inch Equivalent	Millimeter Equivalent	Morse Taper Number	Flute Length *F*		Overall Length *L*	
Fraction	Millimeters			*A*	Inch	Millimeters	Inch	Millimeters
3		3.0000	76.200	...	...	...	...	...
	77.00	3.0315	77.000	5	14¼	362	22	559
	78.00	3.0709	78.000	5	14¼	362	22	559
3⅛		3.1250	79.375	5	14¼	362	22	559
3¼		2.2500	82.550	5	15¼	387	22	584
3½		3.5000	88.900	5	16¼	413	24	610

Copyright ASME International
Provided by IHS under license with ASME
No reproduction or networking permitted without license from IHS
Not for Resale

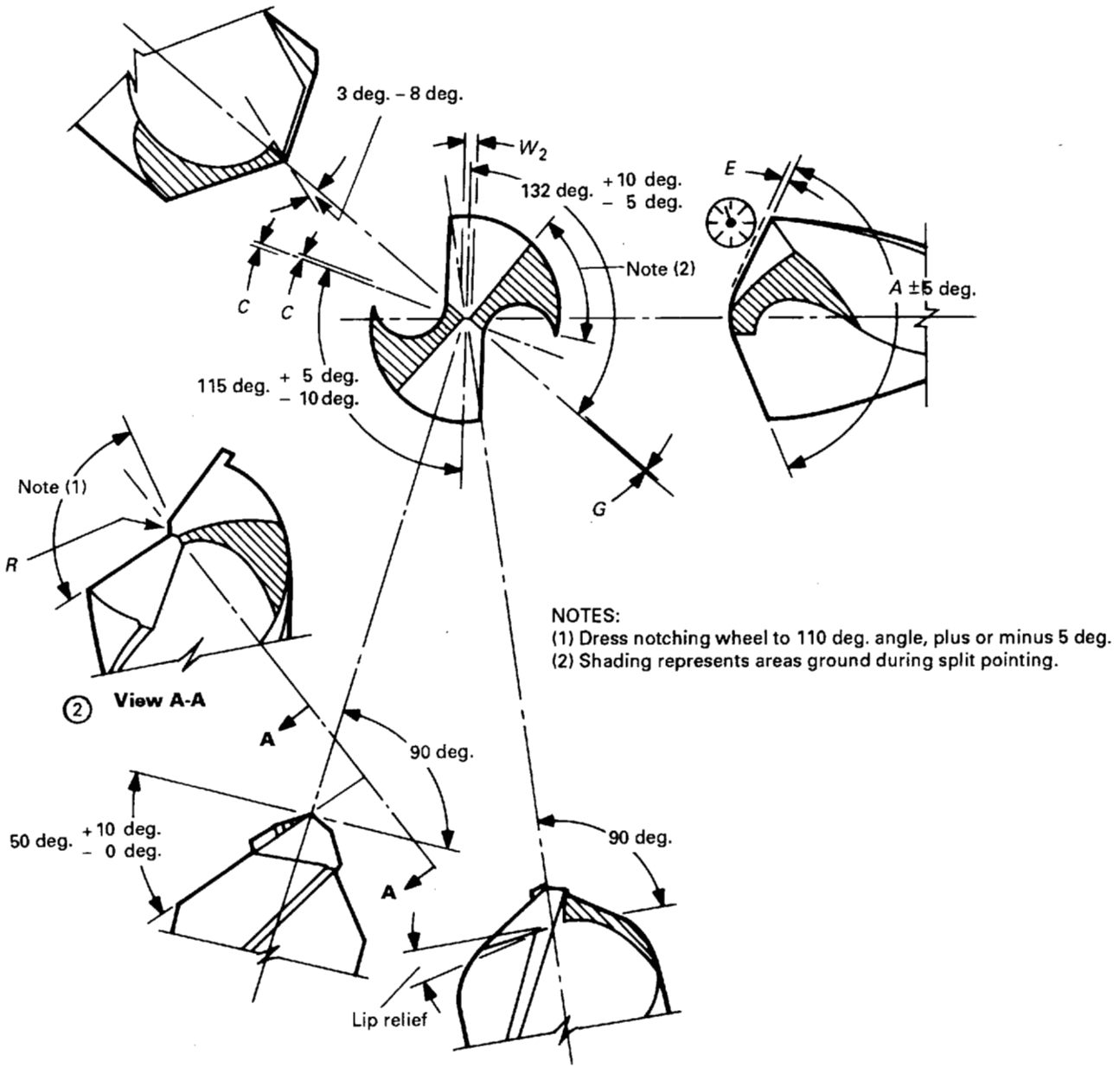

NOTES:
(1) Dress notching wheel to 110 deg. angle, plus or minus 5 deg.
(2) Shading represents areas ground during split pointing.

TABLE 6 SPLIT POINT DRILL GRINDING

Range	*A* = 118 deg. Lip Relief	*A* = 135 deg. Lip Relief	*E* Lip Height	W_2 Web After Notching	*R* Max. Rad. in Notch	*G* Align. of Sec. Cutting Edges	*C* Chisel Edge Centrality
1/16–#41	20 deg. ± 3 deg.	16 deg. ± 3 deg.	.002 T.I.V.	.002/.005	.005	.002	.002
#40–1/8	17 deg. ± 2 deg.	14 deg. ± 2 deg.	.002 T.I.V.	.002/.005	.007	.003	.002
Over 1/8–1/4	14 deg. ± 2 deg.	14 deg. ± 2 deg.	.002 T.I.V.	.002/.005	.010	.003	.002
Over 1/4–1/2	12 deg. ± 2 deg.	12 deg. ± 2 deg.	.002 T.I.V.	.002/.009	.015	.004	.004
Over 1/2–3/4	12 deg. ± 2 deg.	10 deg. ± 2 deg.	.004 T.I.V.	.003/.012	.020	.005	.004
Over 3/4–1	11 deg. ± 2 deg.	8 deg. ± 2 deg.	.004 T.I.V.	.005/.020	.025	.007	.004

GENERAL NOTE: Source NAS 907, 14 Feb. 1986, pp. 15 and 16.

Copyright ASME International
Provided by IHS under license with ASME
No reproduction or networking permitted without license from IHS
Not for Resale

Cylindrical or Flatted Shanks

Uniform dimensions for all drill sizes
from *A* = 1/2 in. to *A* = 1-1/4 in.

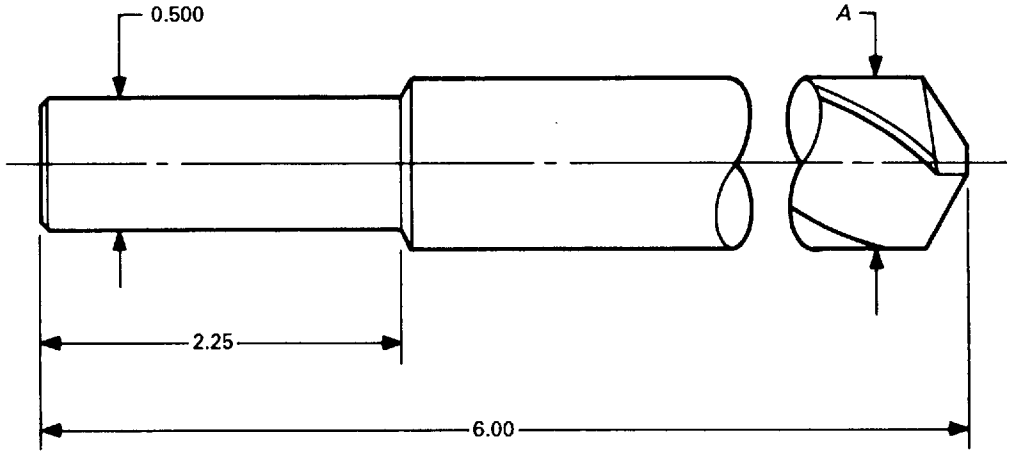

For *A* = 1/2 in. to 1 in., these drills are standardized to be available in 1/32 in. increments.
For *A* = 1 in. to 1-1/4 in., these drills are standardized to be available in 1/16 in. increments.

FIG. 4 DIMENSIONS OF FRACTIONAL SIZE TWIST DRILLS — HIGH SPEED STEEL (SILVER AND DEMING STYLE)

Copyright ASME International
Provided by IHS under license with ASME
No reproduction or networking permitted without license from IHS
Not for Resale

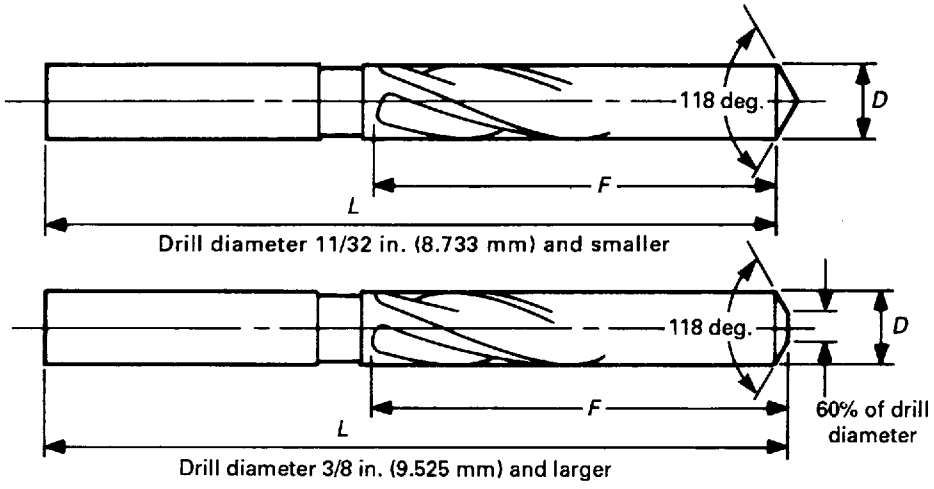

Nominal shank size is same as nominal drill size

See Table 10 for tolerances

TABLE 7 GENERAL DIMENSIONS OF THREE AND FOUR FLUTE STRAIGHT SHANK CORE DRILLS FRACTIONAL SIZES ONLY

Diameter of Drill			Three Flute				Four Flute			
			Flute Length		Overall Length		Flute Length		Overall Length	
D	Decimal Inch	Millimeter	*F*		*L*		*F*		*L*	
Inches	Equivalent	Equivalent	Inch	Millimeters	Inch	Millimeters	Inch	Millimeters	Inch	Millimeters
1/4	0.2500	6.350	3 3/4	95	6 1/8	156	...	...	...	...
9/32	0.2812	7.142	3 7/8	98	6 1/4	159	...	...	...	...
5/16	0.3125	7.938	4	102	6 3/8	162	...	...	...	...
11/32	0.3438	8.733	4 1/8	105	6 1/2	165	...	...	...	...
3/8	0.3750	9.525	4 1/8	105	6 3/4	171	...	...	...	...
13/32	0.4062	10.317	4 3/8	111	7	178	...	...	...	...
7/16	0.4375	11.112	4 5/8	117	7 1/4	184	...	...	...	...
15/32	0.4688	11.908	4 3/4	121	7 1/2	190	...	...	...	...
1/2	0.5000	12.700	4 3/4	121	7 3/4	197	4 3/4	121	7 3/4	197
17/32	0.5312	13.492	4 3/4	121	8	203	4 3/4	121	8	203
9/16	0.5625	14.288	4 7/8	124	8 1/4	210	4 7/8	124	8 1/4	210
19/32	0.5938	15.083	4 7/8	124	8 3/4	222	4 7/8	124	8 3/4	222
5/8	0.6250	15.875	4 7/8	124	8 3/4	222	4 7/8	124	8 3/4	222
21/32	0.6562	16.667	5 1/8	130	9	229	5 1/8	130	9	229
11/16	0.6875	17.462	5 3/8	137	9 1/4	235	5 3/8	137	9 1/4	235
23/32	0.7188	18.258	...	...	...	...	5 5/8	143	9 1/2	241
3/4	0.7500	19.050	5 7/8	149	9 3/4	248	5 7/8	149	9 3/4	248
25/32	0.7812	19.842	...	...	...	...	6	152	9 7/8	251
13/16	0.8125	20.638	...	...	...	...	6 1/8	156	10	254
27/32	0.8438	21.433	...	...	...	...	6 1/8	156	10	254

Copyright ASME International
Provided by IHS under license with ASME
No reproduction or networking permitted without license from IHS
Not for Resale

TABLE 7 GENERAL DIMENSIONS OF THREE AND FOUR FLUTE STRAIGHT SHANK CORE DRILLS FRACTIONAL SIZES ONLY (CONT'D)

Diameter of Drill			Three Flute				Four Flute			
			Flute Length		Overall Length		Flute Length		Overall Length	
D	Decimal Inch Equivalent	Millimeter Equivalent	*F*		*L*		*F*		*L*	
Inches			Inch	Millimeters	Inch	Millimeters	Inch	Millimeters	Inch	Millimeters
7/8	0.8750	22.225	...	...	...	...	6 1/8	156	10	254
29/32	0.9062	23.017	...	...	...	...	6 1/8	156	10	254
15/16	0.9375	23.812	...	...	...	...	6 1/8	156	10 3/4	273
31/32	0.9688	24.608	...	...	...	...	6 3/8	162	11	279
1	1.0000	25.400	...	...	...	...	6 3/8	162	11	279
1 1/32	1.0312	26.192	...	...	...	...	6 1/2	165	11 1/8	283
1 1/16	1.0625	26.988	...	...	...	...	6 5/8	168	11 1/4	286
1 3/32	1.0938	27.783	...	...	...	...	6 7/8	175	11 1/2	292
1 1/8	1.1250	28.575	...	...	...	...	7 1/8	181	11 3/4	298
1 1/4	1.2500	31.750	...	...	...	...	7 7/8	200	12 1/2	318

Copyright ASME International
Provided by IHS under license with ASME
No reproduction or networking permitted without license from IHS
Not for Resale

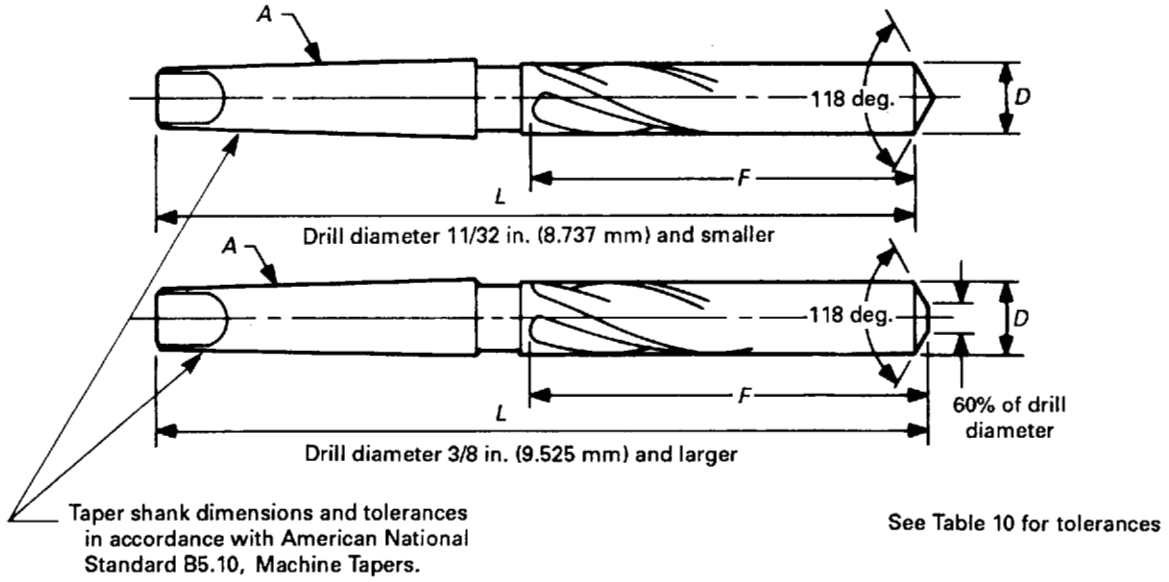

TABLE 8 GENERAL DIMENSIONS OF THREE AND FOUR FLUTE TAPER SHANK CORE DRILLS FRACTIONAL SIZES ONLY

Diameter of Drill			Three Flute					Four Flute				
			Morse Taper Number	Flute Length		Overall Length		Morse Taper Number	Flute Length		Overall Length	
D	Decimal Inch Equiv.	mm Equiv.		F		L			F		L	
Inches			A	Inch	mm	Inch	mm	A	Inch	mm	Inch	mm
1/4	0.2500	6.350	1	2 7/8	73	6 1/8	156	...	...	...	...	...
9/32	0.2812	7.142	1	3	76	6 1/4	159	...	...	...	...	...
5/16	0.3175	7.938	1	3 1/8	79	6 3/8	162	...	...	...	...	...
11/32	0.3438	8.733	1	3 1/4	83	6 1/2	165	...	...	...	...	...
3/8	0.3750	9.525	1	3 1/2	89	6 3/4	171	...	...	...	...	...
13/32	0.4062	10.217	1	3 5/8	92	7	178	...	...	...	...	...
7/16	0.4375	11.112	1	3 7/8	98	7 1/4	184	...	...	...	...	...
15/32	0.4688	11.908	1	4 1/8	105	7 1/2	190	...	...	...	...	...
1/2	0.5000	12.700	2	4 3/8	111	8 1/4	210	2	4 3/8	111	8 1/4	210
17/32	0.5312	13.492	2	4 5/8	117	8 1/2	216	2	4 5/8	117	8 1/2	216
9/16	0.5625	14.288	2	4 7/8	124	8 3/4	222	2	4 7/8	124	8 3/4	222
19/32	0.5938	15.083	2	4 7/8	124	8 3/4	222	2	4 7/8	124	8 3/4	222
5/8	0.6250	15.815	2	4 7/8	124	8 3/4	222	2	4 7/8	124	8 3/4	222
21/32	0.6562	16.668	2	5 1/8	130	9	229	2	5 1/8	130	9	229
11/16	0.6875	17.462	2	5 3/8	137	9 1/4	235	2	5 3/8	137	9 1/4	235
23/32	0.7188	18.258	2	5 5/8	143	9 1/2	241	2	5 5/8	143	9 1/2	241
3/4	0.7500	19.050	2	5 7/8	149	9 3/4	248	2	5 7/8	149	9 3/4	248
25/32	0.7812	19.842	2	6	152	9 7/8	251	2	6	152	9 7/8	251
13/16	0.8125	20.638	3	6 1/8	156	10 3/4	273	3	6 1/8	156	10 3/4	273
27/32	0.8438	21.433	3	6 1/8	156	10 3/4	273	3	6 1/8	156	10 3/4	273
7/8	0.8750	22.225	3	6 1/8	156	10 3/4	273	3	6 1/8	156	10 3/4	273
29/32	0.9062	23.000	3	6 1/8	156	10 3/4	273	3	6 1/8	156	10 3/4	273
15/16	0.9375	23.812	3	6 1/8	156	10 3/4	273	3	6 1/8	156	10 3/4	273
31/32	0.9688	24.608	3	6 3/8	162	11	279	3	6 3/8	162	11	279
1	1.0000	25.400	3	6 3/8	162	11	279	3	6 3/8	162	11	279

Copyright ASME International
Provided by IHS under license with ASME
No reproduction or networking permitted without license from IHS
Not for Resale

TABLE 8 GENERAL DIMENSIONS OF THREE AND FOUR FLUTE TAPER SHANK CORE DRILLS FRACTIONAL SIZES ONLY (CONT'D)

Diameter of Drill			Three Flute					Four Flute				
			Morse Taper Number	Flute Length		Overall Length		Morse Taper Number	Flute Length		Overall Length	
D	Decimal Inch	mm		*F*		*L*			*F*		*L*	
Inches	Equiv.	Equiv.	*A*	Inch	mm	Inch	mm	*A*	Inch	mm	Inch	mm
1 1/32	1.0312	26.192	3	6 1/2	165	11 1/8	283	3	6 1/2	165	11 1/8	283
1 1/16	1.0625	26.988	3	6 5/8	168	11 1/4	286	3	6 5/8	168	11 1/4	286
1 3/32	1.0938	27.783	4	6 7/8	175	12 1/2	318	4	6 7/8	175	12 1/2	318
1 1/8	1.1250	28.575	4	7 1/8	181	12 3/4	324	4	7 1/8	181	12 3/4	324
1 5/32	1.1562	29.367	4	7 1/4	184	12 7/8	327	4	7 1/4	184	12 7/8	327
1 3/16	1.1875	30.162	4	7 3/8	187	13	330	4	7 3/8	187	13	330
1 7/32	1.2188	30.958	4	7 1/2	190	13 1/8	333	4	7 1/2	190	13 1/8	333
1 1/4	1.2500	31.750	4	7 7/8	200	13 1/2	343	4	7 7/8	200	13 1/2	343
1 9/32	1.2812	32.542	...	...	...	...	...	4	8 1/2	216	14 1/8	359
1 5/16	1.3125	33.338	...	...	...	...	...	4	8 5/8	219	14 1/4	362
1 11/32	1.3438	34.133	...	...	...	...	...	4	8 3/4	222	14 3/8	365
1 3/8	1.3750	34.925	...	...	...	...	...	4	8 7/8	225	14 1/2	368
1 13/32	1.4062	35.717	...	...	...	...	...	4	9	229	14 5/8	371
1 7/16	1.4375	36.512	...	...	...	...	...	4	9 1/8	232	14 3/4	375
1 15/32	1.4683	37.300	...	...	...	...	...	4	9 1/4	235	14 7/8	378
1 1/2	1.5000	38.100	...	...	...	...	...	4	9 3/8	238	15	381
1 17/32	1.5312	38.892	...	...	...	...	...	5	9 3/8	238	16 3/8	416
1 9/16	1.5675	39.688	...	...	...	...	...	5	9 5/8	244	16 5/8	422
1 19/32	1.5938	40.483	...	...	...	...	...	5	9 7/8	251	16 7/8	429
1 5/8	1.6250	41.275	...	...	...	...	...	5	10	254	17	432
1 21/32	1.6562	42.067	...	...	...	...	...	5	10 1/8	257	17 1/8	435
1 11/16	1.6875	42.862	...	...	...	...	...	5	10 1/8	257	17 1/8	435
1 23/32	1.8438	43.658	...	...	...	...	...	5	10 1/8	257	17 1/8	435
1 3/4	1.7500	44.450	...	...	...	...	...	5	10 1/8	257	17 1/8	435
1 25/32	1.7812	45.262	...	...	...	...	...	5	10 1/8	257	17 1/8	435
1 13/16	1.8125	46.038	...	...	...	...	...	5	10 1/8	257	17 1/8	435
1 27/32	1.0000	46.833	...	...	...	...	...	5	10 1/8	257	17 1/8	435
1 7/8	1.8750	47.625	...	...	...	...	...	5	10 3/8	264	17 3/8	441
1 29/32	1.9062	48.417	...	...	...	...	...	5	10 3/8	264	17 3/8	441
1 15/16	1.9375	49.212	...	...	...	...	...	5	10 3/8	264	17 3/8	441
1 31/32	1.9688	50.008	...	...	...	...	...	5	10 3/8	264	17 3/8	441
2	2.0000	50.800	...	...	...	...	...	5	10 3/8	264	17 3/8	441
2 1/8	2.1250	53.975	...	...	...	...	...	5	10 1/4	260	17 3/8	441
2 1/4	2.2500	57.150	...	...	...	...	...	5	10 1/8	257	17 3/8	441
2 3/8	2.3750	60.325	...	...	...	...	...	5	10 1/8	257	17 3/8	441
2 1/2	2.5000	63.500	...	...	...	...	...	5	11 1/4	286	18 3/4	476

Copyright ASME International
Provided by IHS under license with ASME
No reproduction or networking permitted without license from IHS
Not for Resale

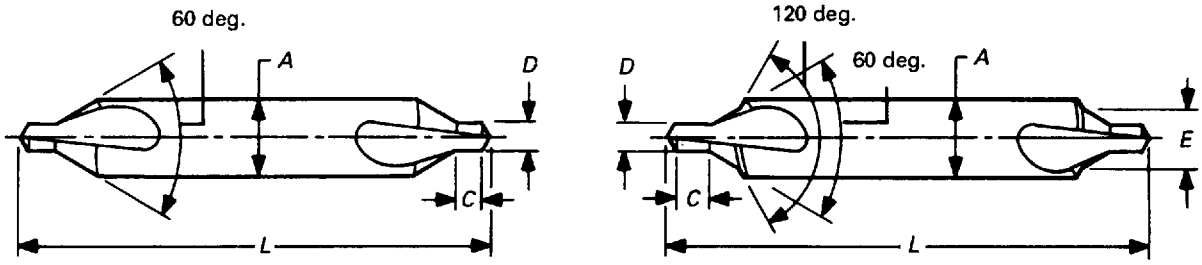

Plain Type **Bell Type**

TABLE 9A GENERAL DIMENSIONS OF COMBINED DRILLS AND COUNTERSINKS

Plain Type

Size Designation	Body Diameter A		Drill Diameter D		Drill Length C		Overall Length L	
	Inches	Millimeters	Inches	Millimeters	Inches	Millimeters	Inches	Millimeters
00	3/32	2.38	.025	0.64	.030	0.76	1 1/8	29
0	3/32	2.38	1/32	0.79	.038	0.97	1 1/8	29
1	1/8	3.18	3/64	1.19	3/64	1.19	1 1/4	32
2	3/16	4.76	5/64	1.98	5/64	1.98	1 7/8	48
3	1/4	6.35	7/64	2.78	7/64	2.78	2	51
4	5/16	7.94	1/8	3.18	1/8	3.18	2 1/8	54
5	7/16	11.11	3/16	4.76	3/16	4.76	2 3/4	70
6	1/2	12.70	7/32	5.56	7/32	5.56	3	76
7	5/8	15.88	1/4	6.35	1/4	6.35	3 1/4	83
8	3/4	19.05	5/16	7.94	5/16	7.94	3 1/2	89

Bell Type

Size Designation	Body Diameter A		Drill Diameter D		Bell Diameter E		Drill Length C		Overall Length L	
	Inches	Millimeters	Inches	Millimeters	Inches	Millimeters	Inches	Millimeters	Inches	Millimeters
11	1/8	3.18	3/64	1.19	0.10	2.5	3/64	1.19	1 1/4	32
12	3/16	4.76	1/16	1.59	0.15	3.8	1/16	1.59	1 7/8	48
13	1/4	6.35	3/32	2.38	0.20	5.1	3/32	2.38	2	51
14	5/16	7.94	7/64	2.78	0.25	6.4	7/64	2.78	2 1/4	54
15	7/16	11.11	5/32	3.97	0.35	8.1	5/32	3.97	2 3/4	70
16	1/2	12.70	3/16	4.76	0.40	10.2	3/16	4.76	3	76
17	5/8	15.88	7/32	5.56	0.50	12.7	7/32	5.56	3 1/4	83
18	3/4	19.05	1/4	6.35	0.60	15.2	1/4	6.35	3 1/2	89

Copyright ASME International
Provided by IHS under license with ASME
No reproduction or networking permitted without license from IHS
Not for Resale

TABLE 9B TOLERANCES OF COMBINED DRILLS AND COUNTERSINKS

Element	Size Designations	Inches		Millimeters	
		Plus (+)	Minus (−)	Plus (+)	Minus (−)
Body diameter (*A*)	All sizes	0.0000	0.0020	0.000	0.051
Drill length (*C*)	00	0.005	0.005	0.13	0.13
	0 through 2	0.008	0.008	0.20	0.20
	11 and 12				
	3 through 8	1/64	1/64	0.4	0.4
	13 through 18				
Drill diameter (*D*)	All sizes	0.0030	0.0000	0.076	0.000
Overall length (*L*)	All sizes	1/32	1/16	0.8	1.6

Copyright ASME International
Provided by IHS under license with ASME
No reproduction or networking permitted without license from IHS
Not for Resale

TABLE 10 ELEMENT TOLERANCES FOR HIGH SPEED STEEL GENERAL PURPOSE TWIST DRILLS

Drill Diameter at Point

Diameter of Drill			Tolerance			
			Inches		Millimeters	
Inches		Millimeters	Plus (+)	Minus (−)	Plus (+)	Minus (−)
From #97	through #81	From 0.15 through 0.33	0.0002	0.0002	0.005	0.005
Over #81	through 1/8	Over 0.33 through 3.18	0.0000	0.0005	0.000	0.013
Over 1/8	through 1/4	Over 3.18 through 6.35	0.0000	0.0007	0.000	0.018
Over 1/4	through 1/2	Over 6.35 through 12.70	0.0000	0.0010	0.000	0.025
Over 1/2	through 1	Over 12.70 through 25.40	0.0000	0.0012	0.000	0.030
Over 1	through 2	Over 25.40 through 50.80	0.0000	0.0015	0.000	0.038
Over 2	through 3 1/2	Over 50.80 through 88.90	0.0000	0.0020	0.000	0.051

Shank Diameter (Straight Shank Drills)

Diameter of Drill			Tolerance			
			Inches		Millimeters	
Inches		Millimeters	Plus (+)	Minus (−)	Plus (+)	Minus (−)
From #97	through #81	From 0.15 through 0.33	0.0002 Minus (−)	0.0002 Minus (−)	0.005 Minus (−)	0.005 Minus (−)
Over #81	through 1/8	Over 0.33 through 3.18	0.0000	0.0025	0.000	0.064
Over 1/8	through 1/4	Over 3.18 through 6.35	0.0005	0.0030	0.013	0.076
Over 1/4	through 1/2	Over 6.35 through 12.70	0.0005	0.0045	0.013	0.114
Over 1/2	through 2	Over 12.70 through 50.80	0.0005	0.0030	0.013	0.076

Back Taper

Diameter of Drill			Tolerance Per Unit of Flute Length	
Inches		Millimeters	Inches	Millimeters
From #97	through #81	From 0.15 through 0.33	None	None
Over #81	through 1/8	Over 0.33 through 3.18	0.0000 to 0.0008	0.000 to 0.020
Over 1/8	through 1/4	Over 3.18 through 6.35	0.0002 to 0.0008	0.005 to 0.020
Over 1/4	through 1/2	Over 6.35 through 12.70	0.0002 to 0.0009	0.005 to 0.022
Over 1/2	through 1	Over 12.70 through 25.40	0.0003 to 0.0011	0.007 to 0.028
Over 1	through 3 1/2	Over 25.40 through 88.90	0.0004 to 0.0015	0.010 to 0.038

Copyright ASME International
Provided by IHS under license with ASME
No reproduction or networking permitted without license from IHS
Not for Resale

TABLE 10 ELEMENT TOLERANCES FOR HIGH SPEED STEEL GENERAL PURPOSE TWIST DRILLS (CONT'D)

Flute Length

Diameter of Drill				Tolerance			
				Inches		Millimeters	
Inches		Millimeters		Plus (+)	Minus (−)	Plus (+)	Minus (−)
From #97	through #81	From 0.15	through 0.33	1/64	1/64	.4	.4
Over #81	through 1/8	Over 0.33	through 3.18	1/8	1/16	3.2	1.6
Over 1/8	through 1/2	Over 3.18	through 12.70	1/8	1/8	3.2	3.2
Over 1/2	through 1	Over 12.70	through 25.40	1/4	1/8	6.4	3.2
Over 1	through 2	Over 25.40	through 50.80	1/4	1/4	6.4	6.4
Over 2	through 3 1/2	Over 50.80	through 88.90	3/8	3/8	9.5	9.5

Overall Length

Diameter of Drill				Tolerance			
				Inches		Millimeters	
Inches		Millimeters		Plus (+)	Minus (−)	Plus (+)	Minus (−)
From #97	through #81	From 0.15	through 0.33	1/32	1/32	0.8	0.8
Over #81	through 1/8	Over 0.33	through 3.18	1/8	1/16	3.2	1.6
Over 1/8	through 1/2	Over 3.18	through 12.70	1/8	1/8	3.2	3.2
Over 1/2	through 1	Over 12.70	through 25.40	1/4	1/8	6.4	3.2
Over 1	through 2	Over 25.40	through 50.80	1/4	1/4	6.4	6.4
Over 2	through 3 1/2	Over 50.80	through 88.90	3/8	3/8	9.5	9.5

Included Angle of Point

Diameter of Drill				Included Angle	Tolerance
Inches		Millimeters			
From 1/16	through 1/2	From 1.59	through 12.70	118°	±5°
Over 1/2	through 1 1/2	Over 12.70	through 38.10	118°	±3°
Over 1 1/2	through 3 1/2	Over 38.10	through 88.90	118°	±2°

GENERAL NOTE: 95% of drills in any one lot to fall within above tolerance.

Copyright ASME International
Provided by IHS under license with ASME
No reproduction or networking permitted without license from IHS

Not for Resale

TABLE 10 ELEMENT TOLERANCES FOR HIGH SPEED STEEL GENERAL PURPOSE TWIST DRILLS (CONT'D)

Lip Height

Diameter of Drill				Tolerance	
				Total Indicator Variation (T.I.V.)	
Inches		Millimeters		Inches	Millimeters
From 1/16	through 1/8	From 1.59	through 3.18	0.0020	0.051
Over 1/8	through 1/4	Over 3.18	through 6.35	0.0030	0.076
Over 1/4	through 1/2	Over 6.35	through 12.70	0.0040	0.102
Over 1/2	through 1	Over 12.70	through 25.40	0.0050	0.127
Over 1	through 3 1/2	Over 25.40	through 88.90	0.0060	0.152

GENERAL NOTES:
(a) 95% of drills in any one lot to fall within above tolerance.
(b) Method of measurement: Rotate the drill in a V-block against a back end stop. Measure the cutting lip height variation on a comparator, or with an indicator set at a location approximately 75% of the distance from the center to the periphery of the drill.

Centrality of Web

Diameter of Drill				Tolerance	
				Total Indicator Variation (T.I.V.)	
Inches		Millimeters		Inches	Millimeters
From 1/16	through 1/8	From 1.59	through 3.18	0.0030	0.076
Over 1/8	through 1/4	Over 3.18	through 6.35	0.0040	0.102
Over 1/4	through 1/2	Over 6.35	through 12.70	0.0050	0.127
Over 1/2	through 1	Over 12.70	through 25.40	0.0070	0.178
Over 1	through 3 1/2	Over 25.40	through 88.90	0.0100	0.254

GENERAL NOTES:
(a) 95% of drills in any one lot to fall within above tolerance.
(b) Method of measurement: Rotate the drill in a close fitting bushing. Record the difference in indicator readings of the web at the point as the drill is indexed 180 deg.

Flute Spacing

Diameter of Drill				Tolerance			
				Total Indicator Variation (T.I.V.)		Actual Deviation	
Inches		Millimeters		Inches	Millimeters	Inches	Millimeters
From 1/16	through 1/8	From 1.59	through 3.18	0.0030	0.076	0.0015	0.038
Over 1/8	through 1/4	Over 3.18	through 6.35	0.0060	0.152	0.0030	0.076
Over 1/4	through 1/2	Over 6.35	through 12.70	0.0100	0.254	0.0050	0.127
Over 1/2	through 1	Over 12.70	through 25.40	0.0140	0.356	0.0070	0.178
Over 1	through 3 1/2	Over 25.40	through 88.90	0.0260	0.660	0.0130	0.330

GENERAL NOTES:
(a) 95% of drills in any one lot to fall within above tolerance.
(b) Method of measurement: Place the drill in a V-block against a back end stop, and rotate it against a radial finger stop. Take an indicator reading at the leading edge of the margin on the opposite flute. Repeat for the other flute and note the difference between the two readings. The deviation in flute spacing is equal to one-half the difference between the two readings.

Copyright ASME International
Provided by IHS under license with ASME
No reproduction or networking permitted without license from IHS
Not for Resale

TABLE 10 ELEMENT TOLERANCES FOR HIGH SPEED STEEL GENERAL PURPOSE TWIST DRILLS (CONT'D)

Runout (Straightness)

Jobbers Length: For drills smaller than .03125 in., runout tolerances to be to manufacturer's discretion. For drills .03125 in. and larger, runout tolerances are to be calculated per the following formula:

$$\text{Maximum TIR} = \left[.0001316 \left(\frac{\text{overall length}}{\text{drill diameter}} \right) \right] + .00368$$

Examples

Diameter	Maximum TIR
1/16	.008
1/8	.007
1/4	.006
3/8	.005
1/2	.005

Taper Lengths: For drills smaller than .03125 in., runout tolerances to be to manufacturer's discretion. For drills .03125 in. and larger, runout tolerances are to be calculated per the following formula:

$$\text{Maximum TIR} = \left[.000375 \left(\frac{\text{overall length}}{\text{drill diameter}} \right) \right] + .0027$$

The maximum allowable value, however, is .020 TIR.

Examples

Diameter	Maximum TIR
1/16	.021 (use .020)
1/8	.018
1/4	.012
3/8	.009
1/2	.009
3/4	.008
1	.007
1 1/2	.006

GENERAL NOTES:

(a) The portion of Table 10 on pages 59 and 60 is excerpted from Table 805 in Metal Cutting Tool Handbook, Seventh Edition, published for the U.S. Cutting Tool Institute by Industrial Press. Reproduced by permission of the U.S. Cutting Tool Institute.

(b) All dimensions are in inches.

Copyright ASME International
Provided by IHS under license with ASME
No reproduction or networking permitted without license from IHS
Not for Resale

TABLE 10 ELEMENT TOLERANCES FOR HIGH SPEED STEEL GENERAL PURPOSE TWIST DRILLS (CONT'D)

Runout (Straightness)

Screw Machine Lengths: For drills smaller than .0400 in., runout tolerances to be to manufacturer's discretion. For drills .0400 in. and larger, runout tolerances are to be calculated per the following formula:

$$\text{Maximum TIR} = \left[.0001316 \left(\frac{\text{overall length}}{\text{drill diameter}} \right) \right] + .00368$$

The maximum allowable value, however, is .007 in. TIR.

Examples

Diameter	Maximum TIR
1/16	.007
1/8	.006
1/4	.005
3/8	.005
1/2	.005
3/4	.005
1	.004
1 1/2	.004

6 in. Aircraft Drills

Diameter Range	Maximum TIR
.0400–.0624	.020
.0625–.1249	.015
.1250–.2499	.012
.2500–.3749	.010
.3750–.4999	.007
.5000	.005

12 in. Aircraft Drills

Diameter Range	Maximum TIR
.0400–.0624	.040
.0625–.1934	.035
.1935–.5000	.025

Taper Shank

Diameter Range	Maximum TIR
.1250–.3749	.015
.3750–1.4999	.010
1.5000 and larger	.007

GENERAL NOTES:
(a) All dimensions are in inches.
(b) 95% of drills in any one lot to fall within above tolerance.
(c) Method of measurement:
  (1) Straight shank drills are to be checked with 1 in. of shank in a V-block with measurements taken on the margins at the point. If shank length is shorter than 1 in., use the full length of shank.
  (2) Taper shank drills are to be checked with the shank in a tapered V-block or a precision socket.
(d) Calculated values are to be rounded to the nearer thousandth of an inch.

Copyright ASME International
Provided by IHS under license with ASME
No reproduction or networking permitted without license from IHS
Not for Resale

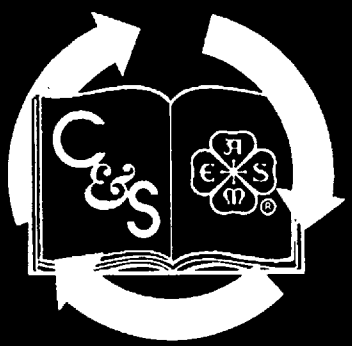

This document is printed
on 50% recycled paper.

ISBN #0-7918-2235-4

N02793

Copyright ASME International
Provided by IHS under license with ASME
No reproduction or networking permitted without license from IHS

Not for Resale